This document was too large to scan as a single document; therefore, it has been divided into smaller sections.

Section 1 of 10

Document Information			
Document #	SD-WM-BIO-001	**Revision**	1
Title	TWRS BASIS FOR INTERIM OPERATION		
Date	10/28/1998		
Originator	Y.G. NOORANI	**Originator Co.**	FDH
Recipient		**Recipient Co.**	
References	ECN-644566		
Keywords	AUTHORIZATION BASIS		
Projects	BIO,TWRS,TFARM,W-320		
Other Information	THIS SECTION CONTAINS VOLUME 1 THRU CHAPTER 5 SEC 5.3 OF VOLUME 2		

ENGINEERING CHANGE NOTICE

Page 1 of 4 KN

1. ECN 644566

Proj. ECN

2. ECN Category (mark one)	3. Originator's Name, Organization, MSIN, and Telephone No.	4. USQ Required?	5. Date
Supplemental ☐ Direct Revision ☒ Change ECN ☐ Temporary ☐ Standby ☐ Supersedure ☐ Cancel/Void ☐	Y.G. Noorani, A3-07 373-6848	☒ Yes ☐ No	10/20/98
	6. Project Title/No./Work Order No. TWRS Basis for Interim Operation Annual Update HN920351 KN	7. Bldg./Sys./Fac. No. TWRS	8. Approval Designator SQ
	9. Document Numbers Changed by this ECN (includes sheet no. and rev.) HNF-SD-WM-BIO-001 Rev. 0-L	10. Related ECN No(s). N/A	11. Related PO No. N/A

12a. Modification Work	12b. Work Package No.	12c. Modification Work Completed	12d. Restored to Original Condition (Temp. or Standby ECNs only)
☐ Yes (fill out Blk. 12b) ☒ No (NA Blks. 12b, 12c, 12d)	N/A	N/A Design Authority/Cog. Engineer Signature & Date	N/A Design Authority/Cog. Engineer Signature & Date

13a. Description of Change

13b. Design Baseline Document? ☐ Yes ☒ No

This ECN updates the TWRS Basis for Interim Operation (BIO),HNF-SD-WM-BIO-001 as Revision 1 based on activities performed to review and update TWRS Authorization Basis per U.S. Department of Energy Order 5480.23. All USQ Evaluations performed since the initial release of the BIO were reviewed and appropriate changes were made to the BIO. Changes made to the BIO were evaluated in the USQ Evaluation TF-98-0896, "TWRS Authorization Basis Annual Update," Rev. 1. Please refer to the USQ Evaluation TF-98-0896 for details.

In addition to the changes made to the BIO based on the annual review discussed above, the following negative USQ Evaluations and RL directions were also incorporated in the Revision 1 of the BIO. (Please refer to the ECN Continuation Sheet [Page 3] for details):

1. USQ Evaluation TF-98-0977, "TWRS Authorization Basis Changes For Cribs," Rev. 0
2. USQ Evaluation TF-98-0224. "Project W320 SAR & Process Control Thermal Analyses," Rev. 0
3. 98-TWR-025, "Contract No. DE-AC06-96RL13200 - Addendum To Safety Evaluation Report (SER) For Project W-320, Tank 241-C-106 Sluicing" (Letter from J.D. Wagoner, RL, to R.D. Hanson, FDH), dated 9/25/98.

14a. Justification (mark one)	14b. Justification Details
Criteria Change ☐ Design Improvement ☐ Environmental ☐ Facility Deactivation ☐ As-Found ☒ Facilitate Const. ☐ Const. Error/Omission ☐ Design Error/Omission ☐	Annual update of HNF-SD-WM-BIO-001 was done to comply with DOE Order 5480.23 Paragraph 9c requirements.

15. Distribution (include name, MSIN, and no. of copies)

Distribution controlled by Unclassified Document Control

RELEASE STAMP

OCT 28 1998

DATE:

STA: 15

HANFORD RELEASE

ID: 21

ENGINEERING CHANGE NOTICE

1. ECN (use no. from pg. 1): 644566

16. Design Verification Required	17. Cost Impact		18. Schedule Impact (days)
	ENGINEERING	CONSTRUCTION	
☐ Yes	Additional ☐ $ N/A	Additional ☐ $ N/A	Improvement ☐ N/A
☒ No	Savings ☐ $ N/A	Savings ☐ $ N/A	Delay ☐ N/A

19. Change Impact Review: Indicate the related documents (other than the engineering documents identified on Side 1) that will be affected by the change described in Block 13. Enter the affected document number in Block 20.

SDD/DD	☐	Seismic/Stress Analysis	☐	Tank Calibration Manual	☐
Functional Design Criteria	☐	Stress/Design Report	☐	Health Physics Procedure	☐
Operating Specification	☐	Interface Control Drawing	☐	Spares Multiple Unit Listing	☐
Criticality Specification	☐	Calibration Procedure	☐	Test Procedures/Specification	☐
Conceptual Design Report	☐	Installation Procedure	☐	Component Index	☐
Equipment Spec.	☐	Maintenance Procedure	☐	ASME Coded Item	☐
Const. Spec.	☐	Engineering Procedure	☐	Human Factor Consideration	☐
Procurement Spec.	☐	Operating Instruction	☐	Computer Software	☐
Vendor Information	☐	Operating Procedure	☐	Electric Circuit Schedule	☐
OM Manual	☐	Operational Safety Requirement	☐	ICRS Procedure	☐
FSAR/SAR	☐	IEFD Drawing	☐	Process Control Manual/Plan	☐
Safety Equipment List	☐	Cell Arrangement Drawing	☐	Process Flow Chart	☐
Radiation Work Permit	☐	Essential Material Specification	☐	Purchase Requisition	☐
Environmental Impact Statement	☐	Fac. Proc. Samp. Schedule	☐	Tickler File	☐
Environmental Report	☐	Inspection Plan	☐	_____	☐
Environmental Permit	☐	Inventory Adjustment Request	☐	_____	☐

20. Other Affected Documents: (NOTE: Documents listed below will not be revised by this ECN.) Signatures below indicate that the signing organization has been notified of other affected documents listed below.

Document Number/Revision	Document Number/Revision	Document Number/Revision
NONE	None	None

21. Approvals

	Signature	Date		Signature	Date
Design Authority	N/A		Design Agent	N/A	
Cog. Eng.	Y.G. Noorani	9/24/98	PE	N/A	
Cog. Mgr.	G.W. Gault	9/24/98	QA	N/A	
QA	S.M. Byers	9/25/98	~~Safety~~ NS	NS&L T. C. Geer	10-22-98
Safety	O. M. Jaka	9/24/98	Design	N/A	
Environ.	N/A		Environ.	N/A	
Other	DST Eng. D.G. Baide	9-24-98	Other	FDH ESH S. N. Maruvada	10/23/98
	SST Eng. Eng. R.E. Larson	9/24/98			
	Ann. Update Eng. W. M. Brantley	9/24/98			
	ABMI M. C. Brady	9/24/98		DEPARTMENT OF ENERGY	
	OPSS C. E. Leach	9/24/98		Signature or a Control Number that tracks the Approval Signature	
	TWRS Nuclear Req. Compliance			98-TWR-025	
	J. J. Badden For JJ Badden	9/25/98		~~Not Required~~	
	TWRS Operations C. J. Rice POC 9-24-98	9/25/98		ADDITIONAL	

USQ Tracking No. TF-97-0523, Rev 2
USQ Tracking No. TF-98-0896
USQ Tracking No. TF-98-0977, Rev 0
USQ Tracking No. TF-98-0224, Rev 0
~~USQ Tracking No. TF-98-0876, Rev. 0~~
USQ Tracking No. TF-97-0876, Rev 0
USQ Tracking No. TF-98-0247

Continued from Page 1 (Block 13a - Description of Change) of this ECN:

This sheet identifies changes made to the BIO based on the negative USQ Screenings/Determination and RL directions listed below. For changes made to the BIO as a result of the annual review, please refer to the USQ Evaluation TF-98-0896:

USQ Screening/Determinations or RL Direction	Summary of Change
USQ Evaluation TF-98-0977, *TWRS Authorization Basis changes for Cribs*, Rev. 0	This USQ Evaluation addresses the cribs in the 200 East and 200 West Areas whose ownership is being transferred to TWRS from the Environmental Restoration (ER) Program. As a result of this change, the following sections in the BIO were updated: Section B2.4.8.1, "Cribs." Figure B2-35, "200 East and 200 West Area Cribs, Ditches and Ponds." Table B2-20, "Cribs, Ditches, and Ponds Currently Owned or Operated By Tank Waste Remediation System."
USQ Evaluation TF-98-0224, *Project W320 SAR & Process Control Thermal Analyses*, Rev. 0	This USQ Evaluation evaluated the release of the updated process control thermal analysis for Project W-320. As a result of this evaluation, the following sections of the BIO Addendum 1, *Tank 241-C-106 Sluicing Safety Analysis*, were updated: Chapter 2.0, "Facility Description": Updated references HNF-SD-W320-ER-004, *Project W-320 SAR and Process Control Thermal Analysism*, 1998, Revision 1, in place of WHC-SD-WM-ER-588, *Tank 241-C-106 Sluicing Evaluation*, 1996, Revision 1. Chapter 3.0, "Accident Analysis": Updated references HNF-SD-W320-ER-004, *Project W-320 SAR and Process Control Thermal Analysis*, 1998, Revision 1, in place of WHC-SD-WM-ER-588, *Tank 241-C-106 Sluicing Evaluation*, 1996, Revision 1, in section 3.4.2.11 and 3.4.2.12. In addition, the total heat load in Tank 241-AY-102 after sluicing was increased by 12,000 Btu/hr based on the revised thermal analysis.

98-TWR-025, *Contract No. DE-AC06-96RL13200 - Addendum To Safety Evaluation Report (SER) For Project W-320, Tank 241-C-Sluicing* (Letter from J.D. Wagoner, RL, to R.D. Hanson, FDH), dated 9/25/98.	This letter is an addendum to the Project W-320 Safety Evaluation Report (SER). The letter provides closure of three prestart findings from the U.S. Department of Energy, Richland Operations Office (RL) Operational Readiness Review for Tank 241-C-106 Sluicing (Project W-320). Per SER, the accident analysis consequences of a liner breach due to steam between the steel liner and concrete shell in Tank 241-C-106 has been revised in BIO Addendum 1, *Tank 241-C-106 Sluicing Safety Analysis*. Specifically, the following sections in Addendum 1 were revised: Table 3.4.2.12-1, "Consequences of a Liner Breach Assuming No Controls": Updated radiological and toxicological consequences per SER. Section 3.5, "References": included SER in the reference list.

Tank Waste Remediation System Basis for Interim Operation

Y. G. Noorani
Fluor Daniel Hanford, Richland, WA 99352
U.S. Department of Energy Contract DE-AC06-96RL13200

EDT/ECN: 644566 UC: 2030
Org Code: 2N700 Charge Code: 101946 COA: BB20 KN
B&R Code: EW3120071 Total Pages: 3187 KN

Key Words: Basis for Interim Operation, BIO, Authorization Basis, AB

Abstract: This Basis for Interim Operation establishes an improved authorization basis for Tank Waste Remediation System facilities and operations required for the storage management of high-level radioactive waste (current and future waste). This Basis for Interim Operation documents the basis for the conclusion that authorized Tank Waste Remediation system facility operations can be conducted safely until approval of the final safety analysis report and associated Technical Safety Requirement document complying with the requirements of DOE 5480.23, *Nuclear Safety Analysis Reports*, and DOE 5480.22, *Technical Safety Requirements*.

TRADEMARK DISCLAIMER. Reference herein to any specific commercial product, process, or service by trade name, trademark, manufacturer, or otherwise, does not necessarily constitute or imply its endorsement, recommendation, or favoring by the United States Government or any agency thereof or its contractors or subcontractors.

Printed in the United States of America. To obtain copies of this document, contact: Document Control Services, P.O. Box 950, Mailstop H6-08, Richland WA 99352, Phone (509) 372-2420; Fax (509) 376-4989.

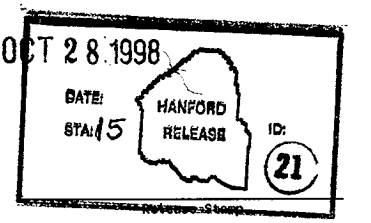

Karen L. Noland 10/28/98
Release Approval Date

Approved for Public Release

RELEASE AUTHORIZATION

Document Number:	HNF-SD-WM-BIO-001, Revision 1
Document Title:	Tank Waste Remediation System Basis for Interim Operation

This document, reviewed in accordance with DOE Order 1430.1D, "Scientific and Technical Information Management," and DOE G 1430.1D-1, "Guide to the Management of Scientific and Technical Information," does not contain classified or sensitive unclassified information and is:

APPROVED FOR PUBLIC RELEASE

V. L. Birkland 10/26/98

V. L. Birkland
Lockheed Martin Services, Inc.
Document Control/Information Clearance

Reviewed for Applied Technology, Business Sensitive, Classified, Copyrighted, Export Controlled, Patent, Personal/Private, Proprietary, Protected CRADA, Trademark, Unclassified Controlled Nuclear Information.

Trademark Disclaimer. Reference herein to any specific commercial product, process, or service by trade name, trademark, manufacturer, or otherwise, does not necessarily constitute or imply its endorsement, recommendation, or favoring by the United States Government or any agency thereof or its contractors or subcontractors. The views and opinions of authors expressed herein do not necessarily state or reflect those of the United States Government or any agency thereof. This report has been reproduced from the best available copy.

Printed in the United States of America.

Available to the U.S. Department of Energy and its contractors from the U.S. Department of Energy Office of Scientific and Technical Information, P.O. Box 62, Oak Ridge, TN 37831; Telephone: 423/576-8401.

Available to the public from the U.S. Department of Commerce National Technical Information Service, 5285 Port Royal Road, Springfield, VA 22161; Telephone: 703/487-4650.

(2) Title

Tank Waste Remediation System Basis for Interim Operation

CHANGE CONTROL RECORD

(3) Revision	(4) Description of Change - Replace, Add, and Delete Pages	Authorized for Release	
		(5) Cog. Engr.	(6) Cog. Mgr. Date
0	(7) EDT# 621234	Y. G. Noorani	G. W. Gault
0-A	Rotary Mode Core Sampling directed change from RL. ECN# 173679	J. S. Schofield	R. E. Raymond
0-B	Incorporate per ECN# 629258 (Authorization Basis Amendment RL directed change to recategorize Tank 241-BY-103 from Facility Group 2 to 3).	R. D. Smith	C. E. Leach
0-C	Incorporate per ECN# 640409 (Authorization Basis Amendment for Waste Retrieval Sluicing System operations, addition of Addendum 1, and editorial changes to revisions 0-A and 0-B).	R. G. Stickney	C. E. Leach
0-D	Incorporate per ECN# 625247 (Authorization Basis Amendment for the 702-AZ Ventilation System (241-AZ-702), addition of Addendum 3)	K. H. Morris	C. E. Leach
0-E	Incorporate per ECN# 644225 (Authorization Basis Amendment per directed change for 702-AZ Ventilation System Flammable Gas Monitoring Success Criteria)	Y. G. Noorani	G. W. Gault
0-F	Delete WHC-CM-4-14, APPLIED RADIOLOGICAL CONTROLS, from Section 4.4 and from the Chapter 4 reference list. Change "SAD-035" in "WHC-SD-WM-SAD-035" in Table 6-1, page 6-8, Derivation Basis column, and add WHC-SD-WM-SAD-035 to Chapter 6 reference list (ECN 646678)	Y. G. Noorani	G. W. Gault
0-G	ECN# 641985 Update References from WHC-SD-WM-RD-057, Rev. 0, to HNF-SD-WM-RD-057, Rev. 1, pp A-3 and A-4.	Y. G. Noorani	G. W. Gault
0-H	Incorporate per ECN# 173673 (Authorization Basis Amendment for the Replacement Cross-Site Transfer System, addition of Addendum 2).	Y. G. Noorani	G. W. Gault
0-I	ECN# 647035 Make changes to Addendum 3 in Chapters 3.0, 4.0, 11.0, and 18.0 as described in the ECN.	Y. G. Noorani	G. W. Gault
0-J	Add Addendum 4 which provides the completed safety analysis for the mixer pump process test in Tank 241-AZ-101. ECN# 643112	Y. G. Noorani	G. W. Gault

CHANGE CONTROL RECORD			
(3) Revision	(4) Description of Change - Replace, Add, and Delete Pages	Authorized for Release	
		(5) Cog. Engr.	(6) Cog. Mgr. Date
0-K	ECN# 646682 / Change ECN# 646883 Page changes to incorporate reanalysis of the 241-AZ-702, 241-A-702, 296-C-006, and 296-P-16 ventilation systems.	Y. G. Noorani	G. W. Gault
0-L KV	Incorporate ECN# 610880 (Authorization Basis amendment for Interim Stabilization) per approved RL letter 98-TWR-013.	Y. G. Noorani	G. W. Gault
1 RS	ECN# 644566 Reissue entire document as Revision 1. Revision 1 was prepared to meet annual review and update requirement per DOE Order 5480.23. Changes incorporated in Revision 1 are documented in USQ Evaluation TF-98-0896. Revision 1 also incoporates changes per USQ Evaluation TF-98-0977, USQ Evaluation TF-98-0224, and RL Letter 98-TWR-025.	Y. G. Noorani 10/26/98	G. W. Gault for Per telecon 10/26/98

HNF-SD-WM-BIO-001
Revision 1

Tank Waste Remediation System Basis for Interim Operation

Volume I:
Executive Summary and Chapters 1 through 4

Prepared by
DE&S Hanford, Inc. for Lockheed Martin Hanford Corporation

Date Published
September 1998

Prepared for the U.S. Department of Energy

FLUOR DANIEL HANFORD, INC.
Richland, Washington

Hanford Management and Integration Contractor for the
U.S. Department of Energy under Contract DE-AC06-96RL13200

Approved for Public Release; Further Dissemination Unlimited

EXECUTIVE SUMMARY

This page intentionally left blank.

EXECUTIVE SUMMARY

This Basis for Interim Operation establishes an improved Authorization Basis for Tank Waste Remediation System facilities and operations required for the storage management of high-level radioactive waste (current and future tank waste). This Basis for Interim Operation documents the basis for the conclusion that authorized Tank Waste Remediation System facility operations can be conducted safely until approval of the Final Safety Analysis Report and associated Technical Safety Requirement document complying with the requirements of DOE 5480.23, *Nuclear Safety Analysis Reports*, and DOE 5480.22, *Technical Safety Requirements*.

This Basis for Interim Operation provides a cohesive, integrated, and systematic interim safety basis. Implementation of the controls established by this Basis for Interim Operation enhances the safe operation of Tank Waste Remediation System facilities. This Basis for Interim Operation also provides a sound basis for conducting effective Unreviewed Safety Question evaluations to ensure continued safe operations.

SCOPE

The Basis for Interim Operation and associated Technical Safety Requirement document applies to the following Tank Waste Remediation System equipment and facilities:

- 177 underground high-level waste tanks including single-shell (149) and double-shell (28) tanks in the 200 East and 200 West Areas
- Catch tanks
- Double-contained receiver tanks
- Waste transfer system
- 2727-W Sodium Storage Facility
- 204-AR Waste Unloading Facility
- 244-AR Vault
- Miscellaneous inactive storage facilities
- 209-E Mixed Waste less than 90-Day *Resource Conservation and Recovery Act of 1976* waste storage pads
- Cribs, ditches, and ponds
- Light duty utility arm
- Push mode sampling
- Cone Penetrometer

- 213-W Dry Waste Compactor Facility
- Vertical storage units within the tank farm boundaries
- Rotary Mode Core Sampling (Flammable Gas Hazards).

Other Tank Waste Remediation System facilities, activities, and projects (e.g., 242-S and 242-T Evaporators; rotary-mode core sampling [excluding flammable gas hazards]) are subject to separate Authorization Basis documents. These separate Authorization Basis documents and future Authorization Basis documents will be incorporated into this Basis for Interim Operation or the subsequent Final Safety Analysis Report as specific changes.

STRUCTURE

This Basis for Interim Operation is organized in the format recommended by DOE-STD-3011-94, *Guidance for Preparation of DOE 5480.22 TSR and DOE 5480.23 (SAR) Implementation Plans*. Chapter 1.0 is an introduction and provides a brief background on Tank Waste Remediation System facilities, mission, and the existing Authorization Basis, including impacts of the Basis for Interim Operation on the current Authorization Basis. Chapter 2.0 and its appendices provide descriptions of Hanford Site characteristics and Tank Waste Remediation System facilities and operations. Relevant operational history of the Hanford Site tank farms is summarized in Chapter 3.0. Chapter 4.0 discusses the safety management programs that provide the administrative framework for the safe operation of Tank Waste Remediation System facilities. The safety analysis that supports this Basis for Interim Operation is described in Chapter 5.0. The safety analysis includes hazard and accident analyses and provides the basis for the interim controls required for protection of the public, onsite workers, facility workers, and the environment. Safety structures, systems, and components and Technical Safety Requirements derived from the safety analysis are summarized in Chapter 6.0. Chapter 7.0 contains a summary of the Basis for Interim Operation conclusions.

Supplemental information specific to the project Authorization Basis is included in the designated addenda. The Basis for Interim Operation addenda are prepared in accordance with format and content guidance of DOE-STD-3009-94, *Preparation Guide for the U.S. Department of Energy Nonreactor Nuclear Facility Safety Analysis Reports*. Addendum 1, "Tank 241-C-106 Sluicing Safety Analysis," contains the Basis for Interim Operation specific to the Tank 241-C-106 Waste Retrieval Sluicing System, Project W-320. Addendum 2, "Safety Analysis for the Replacement Cross-Site Transfer System," contains the Basis for Interim Operation specific to the replacement cross-site transfer system, Project W-058. Addendum 3, "702-AZ Ventilation System (241-AZ-702) Safety Analysis" contains the Basis for Interim Operation specific to the 241-AZ-702 ventilation system, Project W-030. Addendum 4 contains the Basis for Interim Operation for the 241-AZ-101 mixer pump test.

SAFETY MANAGEMENT

The TWRS Integrated Safety Management System (ISMS) ensures consistency, formality, and rigor in the development and maintenance of the Tank Waste Remediation System Authorization Basis, safety basis documents, and technical baseline. Implementation of an ISMS is a significant step forward in supporting the U.S. Department of Energy commitment to satisfying Defense Nuclear Facilities Safety Board (1995), *Recommendation 95-2 to the Secretary of Energy*. The ISMS includes safety management programs that ensure protection of the public, workers, and the environment from exposures and releases of radioactive and hazardous materials. Key safety-related activities that comprise these safety management programs range from radiation and hazardous material protection to disciplined conduct of operations.

HAZARD ANALYSIS

The Basis for Interim Operation includes a comprehensive hazard analysis of Tank Waste Remediation System facilities and operations. The hazard identification methods and techniques include the following:

- Review of past Tank Waste Remediation System safety documents
- Review of Tank Waste Remediation System reportable event history (e.g., unusual occurrence reports)
- Review of historical records of similar operations (e.g., Savannah River Site).
- Participation by current and former Tank Waste Remediation System operations and engineering personnel in the hazard analysis effort
- Use of standardized checklists of hazardous materials and energy sources to consider
- Review of Tank Waste Remediation System facilities and operations descriptions
- Facility walkdowns
- Review of existing Tank Waste Remediation System hazard analyses.

Standard industry hazard evaluation techniques (what-if, preliminary hazard analysis, and hazard and operability study) identified over 1,200 hazardous conditions that might affect the public, onsite workers, facility workers, and the environment. For the hazardous conditions, the hazard evaluation identifies their causes and qualitatively estimates their frequency and consequences.

The hazard analysis selected 29 representative accidents for further quantitative accident analysis based on the release attributes and causes of the identified hazardous conditions (Table ES-1). The supplemental project hazard analyses are presented in the designated addenda to the Basis for Interim Operation. The hazard analysis for the Waste Retrieval Sluicing

System identified 18 representative accidents for further analysis. The hazard analysis for the replacement cross-site transfer system identified 6 representative accidents for further analysis. The hazard analysis for the 241-AZ-702 ventilation system identified several accidents that required re-analysis to account for the 241-AZ-702 ventilation system. The hazard analysis for the 241-AZ-101 mixer pump test is presented in Addendum 4.

Those accidents that may significantly affect the public and onsite workers were selected for detailed analysis using the following criteria: accidents that bound those of lesser but similar potential consequences; accidents that represent the highest risk; and other accidents, although not necessarily bounding, that present some unique or important phenomenological challenge to safety.

Controls for protection of the public and onsite workers are based on the results of both the hazard and accident analyses. Additional controls required to protect the facility worker and the environment are based primarily on the qualitative hazard analysis.

HAZARD CLASSIFICATION

A hazard classification of Tank Waste Remediation System facilities and operations has been performed in accordance with DOE-STD-1027-92, *Hazard Categorization and Accident Analysis Techniques for Compliance with DOE Order 5480.23, Nuclear Safety Analysis Reports*. The hazard classification for all of the double-shell tanks (including aging waste facility tanks), single-shell tanks, and associated waste transfer systems is Hazard Category 2. The associated waste transfer systems include the 204-AR Waste Unloading Facility and the 244-AR Vault. The Hazard Category 2 classification is based on comparing the radioactive material thresholds listed in DOE-STD-1027-92 with estimated waste tank inventories.

ACCIDENT ANALYSIS

The Basis for Interim Operation summarizes the quantitative analysis of 29 representative accidents. The accident analysis considers radiological and toxicological exposure to the public and onsite workers. In the accident analysis, conservative assumptions are used to account for uncertainties and unknowns, simplify analysis, and reduce control complexity. Conservatism is included with the following elements of the accident analyses:

- Accident frequency estimates
- Radiological and toxicological source term estimates
- Accident scenarios
- Estimates of physical conditions and parameters.

The results of the supplemental representative accidents identified for projects and their associated consequences and control requirements are contained in the designated addenda. The results of the representative

accidents identified for the Waste Retrieval Sluicing System and their associated consequences and control requirements are contained in Addendum 1. The results of the representative accident analysis identified for the replacement cross-site transfer system and their associated consequences and control requirements are contained in Addendum 2 and Table 6-1. The results of the representative accident analyses identified for the 702-AZ ventilation system and their associated consequences and control requirements are contained in Addendum 3 and Table 6-1. The results of the representative accident analysis identified for the 241-AZ-101 mixer pump test and their associated consequences and control requirements are contained in Addendum 4 and Table 6-1.

Accidents Below Risk Guidelines with No Controls

Analysis determined that five of the accidents do not pose significant risks (the risks were below the risk guidelines) with no controls. These accidents, whose preventive or mitigative controls are addressed as Defense-in-Depth, are as follows:

- Tank failure due to vacuum or degradation
- Evaporator dump
- Mixing of incompatible waste—toxic vapor generation
- Unplanned excavation or drilling in crib, ditch, or pond
- Aboveground structure failure.

Accidents Below Risk Guidelines With Selected Controls

Analysis determined that another twelve accidents do not pose significant risks with the application of controls (i.e., the risks are below the risk guidelines). For these accidents, application of controls ensures operations can be conducted safely. Additional Defense-in-Depth controls that serve to further reduce the risks from these accidents were also identified. The accidents are as follows:

- Nuclear criticality
- Mixing of incompatible waste—tank pressurization
- High-efficiency particulate air filter failure—exposure to high temperature
- Waste transport vehicle accident
- Caustic spray leak
- Unfiltered release
- Subsurface leak resulting in pool

- Leak from railcar or tank trailer
- Surface leak resulting in pool
- Subsurface leak remaining subsurface
- Sodium fire
- Steam intrusion from interfacing systems.

Accidents Prevented with Selected Controls

The following five accidents are prevented by implementing controls. For each accident, the hazardous condition results directly from activities required for safe waste storage or is inherent to waste storage. With controls implemented, these accidents are "extremely unlikely" or "beyond extremely unlikely." It is judged that the controls selected ensure safe operation.

- **In-tank Fuel Fire/Deflagration**—Vehicles used in the tank farm could impact risers and cause fuel to enter a tank and burn. Prohibiting vehicles from entering the tank farm is not practical because many operations such as sampling and maintenance activities require the use of vehicles. Further, to complete these tasks, bringing these vehicles into close proximity with tank risers is often necessary, precluding the use of physical barricades around risers within tank farm boundaries. Preventive controls reduce the occurrence of vehicle fuel system failures (e.g., provide protection for the vehicle fuel system, limit speed within the tank farms). Outside of the tank farm perimeter fencing, the use of physical barriers will be implemented to restrict vehicle access to aboveground structures that can direct liquids into waste tanks. Only vehicles with protected fuel systems are allowed within the barrier. These controls allow for vehicle access to continue safely. Additionally, Defense-in-Depth measures such as the use of spotters further reduce risks.

- **Fire in Contaminated Area**—Fire in a valve pit, pump pit, or diversion box (i.e., contaminated area) could be caused by vehicle fuel entering the contaminated area and igniting. Preventive controls protect vehicle fuel systems, and physical barriers outside the tank farm boundaries limit vehicle access. These controls allow for vehicle access to continue safely. Additional risk reduction is provided by Defense-in-Depth measures such as fire prevention measures and vegetation control.

- **Tank Failure Due to Excessive Loads**—Dropping a heavy load onto the tank could cause an airborne release of waste material from the tank. Prohibiting lifting of heavy loads in the tank farm is not practical because these lifts are associated with essential safety upgrades and required maintenance activities. Compliance with DOE-RL-92-36, *Hanford Site Hoisting and Rigging Manual*, is required to assure critical lifts are analyzed and controlled. A restriction

of lift height is also imposed. These preventive controls reduce the likelihood of a heavy load drop that could penetrate the tank. These controls therefore provide reasonable assurance that crane operations in the tank farms can continue safely.

Consideration should be given to the following items to further reduce risk:

- Implementing a comprehensive inspection program for double-shell tanks (including Aging Waste Facility tanks), single-shell tanks, double-contained receiver tanks, catch tanks, and waste transfer piping to identify areas that require preventive maintenance or that have a high likelihood of failure

- Accelerating the interim stabilization of single-shell tank farms will reduce significantly the need for heavy load lifting, thereby reducing the time at risk.

- **Spray Leak from Underground Waste Transfer Lines**—A spray leak or leak resulting in a pool could result if an active waste transfer line is impacted by excavation activities. Facility upgrades and maintenance require excavation activities in the 200 East and 200 West Areas, but excavation controls effectively prevent the postulated accident. Excavation controls include requirements for an excavation permit, exclusion of waste transfers in transfer lines located near ongoing excavations, and aboveground labeling of waste transfer lines outside of the tank farm fences.

- **Tank Bump**—Extreme conditions could cause an extended outage of the active ventilation system in the tank, which cause the temperature in the tank to increase. If the temperature reaches the waste saturation temperature, a tank bump could occur. Preventive controls include temperature monitoring (to alert operators so necessary actions can be taken to prevent waste from reaching the saturation temperature) and transfer controls (to ensure that the end state does not produce uncontrollable conditions). Defense-in-Depth controls are also identified. These preventive measures provide assurance that operations can continue safely.

  Consideration should be given to the following items to further reduce risk:

  - Retrieval of waste from Tank 241-C-106 to address the most significant single-shell tank with high heat waste

  - Acceleration of the retrieval of other single-shell tanks where an analysis of the tank heat load indicates the tank contents could approach the saturation temperature in the absence of active ventilation.

Natural Phenomena

The following three natural phenomena are initiators of accidents. These events are analyzed within the context of other accidents presented in this Basis for Interim Operation:

- **High Wind**—High wind is a potential initiator of tank failure due to excessive loads (i.e., crane boom collapse caused by high wind) and aboveground structure failure (i.e., high winds causing a flexible receiver containment bag to swing and tear or puncture). Controls to prevent operations in high winds effectively prevent the conditions that could lead to these accidents.

- **Lightning**—Lightning is a potential initiator for an organic solvent fire, organic salt-nitrate reaction, and flammable gas deflagration. Controls place restrictions on tank farm activities when there is lightning activity within 80 km (50 mi).

  Consideration should be given to the following items to further reduce risk:

  - Completion of the upgrades to provide grounding, bonding, and air terminals to reduce the possibility of lightning-initiated ignition

  - Installation of additional lightning protection systems (e.g., catenary network) for waste tanks that pose significant long-term risks caused by lightning-initiated accidents.

- **Seismic**—A seismic event is a potential initiator for several of the representative accidents. Seismic-initiated leaks resulting in a spray or pool and seismic initiated flammable gas deflagration have the potential for the most severe consequences. Controls for spray leaks and leaks resulting in pools may not be effective following a seismic event. Emergency response planning is identified to control the risk of these accidents following a seismic event. (Seismic-induced flammable gas deflagration is discussed later in this Executive Summary.)

  Consideration should be given to the following items to further reduce risk.

  - Provide a seismic monitor notification and alarm capability in the 200 Areas to alert personnel in case of a seismic event so emergency actions can be initiated as quickly as possible.

  - Provide an automatic shut down of waste transfer pumps following a seismic event.

  - Perform a comprehensive seismic vulnerability study that considers the process operating history of the tank farm facilities to provide recommendations that address identified vulnerabilities.

Accidents Above Risk Guidelines with Existing Available Controls

Four postulated accidents and the seismically induced flammable gas accident exceed the risk guidelines used in this analysis even with existing and available controls. Two accidents are slightly above the risk guidelines and two are significantly above the risk guidelines. Although the risk guidelines are exceeded, it is concluded that the interim risk from these postulated accidents is acceptable for the following reasons.

- The risks are inherent to the characteristics of the stored waste or result from operations required to ensure safe waste storage.
- All existing controls that are available to prevent or mitigate the postulated accidents are implemented.
- The estimates of accident frequency and the calculations of the accident consequences are conservative.

Continued efforts to reduce the risk of these accidents are, however, required. For each accident, additional studies or controls are identified that should be considered to further understand or reduce risk. Efforts that should be considered to remove or reduce the conservatism in the accident analysis methodology to allow a better understanding of the risk are listed later in this Executive Summary.

Accidents Slightly Above Risk Guidelines with Existing Available Controls

The following two accidents with existing and available controls are provided special treatment because the calculated accident results slightly exceed risk guidelines:

- **Organic Solvent Fire**—This accident could result from a fire in the waste tank that burns organic solvent present in the tank. For some analyzed cases, the onsite radiological and toxicological consequences could be higher than the risk guidelines even with controls. A sufficiently energetic heat source, such as lightning, vehicle fuel fire, or hot slag from flame cutting, could cause the organic solvent to ignite and cause the release. Restrictions on tank farm activities when lightning activity is within 80 km (50 mi) reduces the possibility of lightning-initiated ignition. Vehicle access controls and fuel system protection reduce the potential for ignition from a vehicle accident. Ignition controls on flame cutting prevent this ignition source. These actions provide reasonable assurance that operations can be conducted safely.

  Consideration should be given to the following items to further reduce risk:

  - Completion of the upgrades to provide grounding, bonding, and air terminals to reduce the possibility of lightning-initiated ignition

- Completion of the tank vapor space sampling program for all tanks to predict the presence of significant quantities of organic solvents

- Reduction in the organic solvent inventory in tanks.

- **Spray Leak in Structures or from Overground Transfer Lines**—This accident could result from a waste transfer line leak that occurs as a very fine spray. Even with controls, the onsite radiological consequences continue to pose a risk to workers. Completely halting waste transfers is not possible without stopping volume reduction activities and interim stabilization activities. These activities facilitate significant long-term safety improvement initiatives. Controls have been identified for mitigation and prevention (e.g., covers on potential spray locations, isolation and verification of transfer routes to prevent mistransfers, configuration controls). The implemented controls provide assurance that operations can be conducted safely.

  Consideration should be given to the following items to further reduce risk.

  - Spray leaks are currently modeled conservatively because of large uncertainties in the phenomena of leak size, orientation, crack plugging, aerosol loading, and deposition. Crack plugging by solids carried in the waste could be investigated with some simple experiments. This would potentially limit the duration of the spray leak and significantly reduce the inventory released. More detailed computer modeling of the generation, agglomeration, deposition, and leakage of aerosols from an enclosed pit or compartment would likely reduce the dose from the mitigated spray leaks (from pits and compartments).

  - Installation and operation of high-efficiency particulate air filter ventilation systems on process pits, diversion boxes, vault pits, and cleanout boxes; and installing and operating radiation monitors in process pits, diversion boxes, vault pits, and cleanout boxes to detect waste leaks.

Accidents Significantly Above Risk Guidelines with Existing Available Controls

The following two accidents and the seismically induced flammable gas accident are given special treatment because the calculated mitigated results significantly exceed risk guidelines with existing and available controls.

- **Flammable Gas Deflagrations**—Appendix E, "Flammable Gas/Slurry Growth Unreviewed Safety Question: Justification for Continued Operation for the Tank Farms at the Hanford Site," addresses the flammable gas deflagration accident. The Justification for Continued Operation

provides the basis for the required operational restrictions and controls that are incorporated into this Basis for Interim Operation.

Consideration should be given to the following items to further reduce the risk of flammable gas deflagrations.

- **Ventilation Upgrades**-Making modifications to allow direct measurement of the flow rate through each individual actively ventilated tank would provide better assurance that flammable gases are not accumulating as a result of continuous releases. Double-contained receiver tank design modifications to provide an inlet flow path to each tank and to allow measurement of the flow rate through each double-contained receiver tank would provide assurance that flammable gases are not accumulating in double-contained receiver tanks.

- **Monitoring Upgrades**-Adding monitors (e.g., flammable gas, level) with alarms to tanks (a) which either exhibit gas release, level change, or other parameters that would be valuable in better defining the hazard, or (b) where intrusive work is planned, would allow detection of changes in parameters such as flammable gas concentrations.

- **Ignition Controls**-Verifying that tank ventilation systems, instrumentation, and equipment for intrusive activities meet industry standard (e.g., National Fire Protection Association, American Petroleum Institute) requirements for hazardous location equipment would eliminate potential hazards. Upgrade equipment that does not meet these requirements or justify that the design is equivalent to the industry standard requirements.

- **Other Controls**-Installation and operation of mixer pumps in tanks with the potential for gas release events would reduce the time at risk for these large releases by converting the releases into manageable continuous releases. Provisions of a sample port on the ventilation inlet duct would facilitate sampling on loss of ventilation.

In addition consideration should be given to continuing research on flammable gas generation and retention phenomena in tank waste.

- **Organic Salt-Nitrate Reaction**-This accident could result from an ignition of dry, solid organic salt waste. The offsite and onsite radiological and toxicological consequences could pose significant risk. Three dependent criteria exist which are important to understanding the risk posed by organic-nitrate waste. In the order of importance they are the total organic carbon in percent, the moisture level in the waste in percent, and energetics required to initiate or propagate in J/g (measured by calorimetry). If a tank waste can be shown, with the appropriate confidence levels, to contain total organic carbon levels below an established limit, moisture and energetics are not important. Ignition and propagation are not possible if tank waste is shown to contain adequate moisture

even if the total organic carbon levels are greater than established limits. Moisture eliminates ignition and propagation. Energetics are still being evaluated to determine if a limit can be established, below which propagation cannot occur, even if adverse total organic carbon and/or moisture levels exist. Tanks are identified as either safe (insufficient total organic carbon), conditionally safe (moisture above criteria), or unsafe (based on total organic carbon and moisture measurement and analysis). For all of the tank waste sample data collected thus far, no waste measurements have exceeded the conditionally safe criteria. Less than 10 tanks fall into the conditionally safe category because of fuel content. On the basis of sample tank analyses and process information, none of the unsampled tanks is expected to contain average total organic carbon concentrations above the fuel criterion. The Tank Waste Remediation System program continues testing with surrogate and actual waste samples to determine if the conditions assumed in the analysis are possible. Tank characterization is prioritized to sample tanks scheduled for interim stabilization and tanks with the highest reaction potential.

Controls are required to reduce the frequency of the accident. To protect against the organic salt-nitrate reaction hazard, high moisture conditions are maintained in the waste, if possible, and medium strength (>10 J) ignitors are prevented from contacting the waste.

Consideration should be given to the following items to further reduce risk:

- Augmenting the characterization and testing to address the actual chemical compositions making up total organic carbon would reduce conservatisms in modeling reaction energetics
- Investigating the efficiency of removing soluble organic species that could cause propagating reactions by salt well pumping or washing with sodium hydroxide solution
- Installing and operating a tank spray system in tanks with high organic concentrations to ensure adequate moisture in the waste
- Completing the upgrades to provide grounding, bonding, and air terminals to reduce the possibility of lightning-initiated accidents.

- **Natural Phenomena - Seismic**-A seismic event can cause a flammable gas release event in a tank and ignition of the flammable gas. Emergency response planning is required to minimize the post-seismic risk.

Consideration should be given to the following items to further reduce the risk of seismically induced flammable gas deflagrations:

- Provide a seismic monitor notification and alarm capability in the 200 Areas to alert personnel in case of a seismic event so emergency actions can be initiated as quickly as possible.

- Eliminate or mitigate gas release events by accelerating tank waste retrieval.

General Accident Analysis Conservatism

A number of areas exist in the accident analysis methodology where conservatism could be removed if additional work were performed. These include conservatism in the physical models (e.g., spray release model), conservatism in the modeling of tank waste phenomena (e.g., quantity and rate of hydrogen release), and conservatism in radiological and toxicological consequence modeling. Considerations for addressing the first two conservatisms are identified for the specific postulated accidents.

Consideration should be given to the following items to reduce the known conservatism in accident consequence modeling.

Source Term-The radioactive inventory estimates for the high-level waste tanks are currently divided into three groups of tanks: double-shell tanks, Aging Waste Facility tanks, and single-shell tanks, with the isotopic inventories represented by the maximum sample value within the group. Except for the Aging Waste Facility tanks, this is a recognized conservatism necessary because sampling and analysis data presently cannot provide discrete source terms for all individual tanks with adequate statistical confidence to support a safety basis. With more complete data of the high-level waste tank inventory, the double-shell tanks and single-shell tanks could be parceled into more groups with only a few tanks having to be represented by the current conservative inventory estimates. Orders of magnitude reductions could be achieved for some double-shell tanks and some single-shell tanks. It is important that little reduction in the inventory estimates is achievable for some tanks because the sample data represents the actual tank contents.

Toxicological Methodology-The current toxicological exposure methodology is based on a sum-of-fractions which represents the best approach currently available. Potential risk reductions could be achieved by developing a method which, while still conservative, does not rely on a simple sum of exposure concentrations divided by the respective concentration limits. Additional risk reductions could also be achieved by revising the toxic risk guidelines, which are based on routine occupational exposures at the lowest limits, to less conservative limits.

Atmospheric Dispersion Modeling-The accident analysis modeling of atmospheric dispersion neglects agglomeration and deposition of particulate material. The radioactive components and some of the toxicological components are carried by aerosols. More detailed computer

modeling of the agglomeration and deposition of the combustion aerosols could reduce the consequences of several accidents (e.g., organic salt-nitrate reaction, organic solvent).

Emergency Response Actions-Calculating radiological and toxicological exposures to the maximum offsite and onsite individuals takes no credit for emergency response actions (evacuation, sheltering) or personnel self-evacuations based on observed or sensed conditions. If further assessment of postulated accidents identifies means of detecting the event and if a demonstrated ability to take emergency response actions can be shown, the exposure times to the maximum offsite and onsite individual may be reduced. Accident detection could require classification of additional safety structures, systems, and components; new Technical Safety Requirements; or consideration for adding new monitoring systems.

CONTROLS

The hazard and accident analyses were used to select safety structures, systems, and components, Technical Safety Requirements, and other Defense-in-Depth and environmental controls according to a disciplined methodology and process using established control decision criteria. The implemented controls maintain facilities and operations within a safe envelope and provide protection for the public, onsite workers, facility workers, and the environment. The safety, environmental, and operational requirements were optimized to enable the selection of an integrated set of effective controls that accomplish the following:

1. Reduce risk to the public and onsite and facility workers
2. Be effectively implemented in a timely fashion
3. Provide Defense-in-Depth.

The selected controls primarily use existing safety structures, systems, and components with limited exceptions for design additions or modifications that can be rapidly implemented. Although most of the Technical Safety Requirement controls are implemented in existing procedures, there are a number of new or revised controls. For example, new waste transfer controls require extension of the transfer route beyond the previous two-valve isolation to all physically connected systems.

Although the safety structures, systems, and components and Technical Safety Requirement controls were derived primarily from the analysis of the representative accidents, all hazard conditions were analyzed to ensure protection was provided by the controls selected. This is ensured by identifying the applicable controls for each hazardous condition identified for Tank Waste Remediation System facilities and operations.

Hazardous conditions with significant environmental consequences are identified in the hazard analysis. For many of these hazardous conditions, the controls identified to protect the public, onsite worker, and facility

worker also provide protection for the environment. When controls selected to protect the public, onsite worker, and facility worker do not adequately protect the environment, additional required controls are identified.

Chapter 6.0 of the Basis for Interim Operation describes implementation of controls in Technical Safety Requirements or health and safety plans. The control descriptions in Chapter 6.0 and in the Technical Safety Requirements identify safety function, operability requirements, and surveillance requirements.

The controls derived from the hazard and accident analyses for protection of the public, onsite worker, facility worker, and the environment provide the full suite of interim controls necessary to maintain operations within an acceptable level of risk.

DEFENSE-IN-DEPTH

Engineered features and administrative programs and procedures that act to further prevent or mitigate accident risk beyond the safety structures, systems, and components and Technical Safety Requirement controls are identified as Defense-in-Depth controls. Defense-in-Depth controls that provide for significant risk reduction were elevated to safety structures, systems, and components or Technical Safety Requirement controls. Although Defense-in-Depth items are not controlled as safety structures, systems, and components or Technical Safety Requirement controls, they add to overall safety and are governed by configuration control procedures. Identification in the Defense-in-Depth controls increases the awareness of the contribution these features make to safety.

CONCLUSIONS

In summary, this Basis for Interim Operation reaches the following conclusions.

- The accidents analyzed to date confirm known vulnerabilities.
- The selected safety structures, systems, and components and controls (Technical Safety Requirements, health and safety plans, and implementing procedures) provide prevention and mitigation measures to address these vulnerabilities.
- The analyses show that these measures provide reasonable assurance that continued Tank Waste Remediation System facility operations can be conducted safely.
- Several postulated accidents are shown to be significantly above the risk guidelines based on conservative bounding analyses. Existing and available controls are selected to provide immediate, near-term protection while options for additional measures to further reduce risk are evaluated.

Collectively, these conclusions find that the Tank Waste Remediation System facilities can be operated safely following the requirements of this Basis for Interim Operation until the Basis for Interim Operation is replaced by a fully compliant Final Safety Analysis Report. Continuing safety analysis for the Final Safety Analysis Report will further improve understanding of the risk of Tank Waste Remediation System facilities and operation and refine the interim controls established by this Basis for Interim Operation. Action on considerations identified in the Basis for Interim Operation to further reduce risk is also required to address the long-term risk associated with continued storage management.

The project-specific supplemental conclusions are included in the designated addenda to the Basis for Interim Operation. The conclusion of Addendum 1 to the Basis for Interim Operation is that the Waste Retrieval Sluicing System activities can be conducted safely following implementation of the controls and requirements identified in Addendum 1. The conclusion of Addendum 2 to the Basis for Interim Operation is that the replacement cross-site transfer system can be operated safely following implementation of the controls and requirements identified in Addendum 2 and Table 6-1. The conclusion of Addendum 3 to the Basis for Interim Operation is that the 241-AZ-702 ventilation system can be operated safely following implementation of the controls and requirements identified in Addendum 3 and Table 6-1. The conclusions of Addendum 4 to the Basis for Interim Operation is that the 241-AZ-101 mixer pump test can be conducted safely following implementation of controls and requirements identified in Addendum 4 and Table 6-1.

REFERENCES

DNFSB, 1995, *Recommendation 95-2 to the Secretary of Energy*, Defense Nuclear Facilities Safety Board, Washington, D.C.

DOE 5480.22, 1996, *Technical Safety Requirements*, Change 2, U.S. Department of Energy, Washington, D.C.

DOE 5480.23, 1994, *Nuclear Safety Analysis Reports*, Change 1, U.S. Department of Energy, Washington, D.C.

DOE-STD-1027-92, 1992, *Hazard Categorization and Accident Analysis Techniques for Compliance with DOE Order 5480.23, Nuclear Safety Analysis Reports*, U.S. Department of Energy, Washington, D.C.

DOE-STD-3009-94, 1994, *Preparation Guide for U.S. Department of Energy Nonreactor Nuclear Facility Safety Analysis Reports*, U.S. Department of Energy, Washington, D.C.

DOE-STD-3011-94, 1994, *Guidance for Preparation of DOE 5480.22 (TSR) and DOE 5480.23 (SAR) Implementation Plans*, Change 0, U.S. Department of Energy, Washington D.C.

DOE-RL-92-36, 1993, *Hanford Site Hoisting and Rigging Manual*, U.S. Department of Energy, Richland Operations Office, Richland, Washington.

Resource Conservation and Recovery Act of 1976, 42 U.S.C. 6901, et. seq.

Table ES-1. Representative Accidents Selected for Further Quantitative Accident Analysis.

Representative Accidents	Section
Nuclear Criticality	5.3.2.1
HEPA Filter Failure - Exposure to High Temperature or Pressure	5.3.2.2
Unfiltered Release	5.3.2.2
Fire in Contaminated Area	5.3.2.3
Evaporator Dump	5.3.2.4
Steam Intrusion from Interfacing Systems	5.3.2.5
Leak from Railcar/Tank Trailer	5.3.2.6
Subsurface Leak Remaining Subsurface	5.3.2.7
Unplanned Excavation/Drilling in Pond/Ditch/Crib	5.3.2.8
Caustic Spray Leak	5.3.2.9
Sodium Fire	5.3.2.10
Mixing of Incompatible Material - Toxic Vapor Generation	5.3.2.11
Mixing of Incompatible Material - Tank Pressurization	5.3.2.12
Tank Failure Due to Excessive Loads	5.3.2.13
Tank Failures Due to Vacuum or Degradation	5.3.2.13
Flammable Gas Deflagrations	5.3.2.14
Organic Solvent Fire	5.3.2.15
In-Tank Fuel Fire/Deflagration	5.3.2.16
Organic Salt-Nitrate Reaction	5.3.2.17
Surface Leak Resulting in Pool	5.3.2.18
Subsurface Leak Resulting in Pool	5.3.2.19
Spray Leak in Structure or from Overground Waste Transfer Lines	5.3.2.20
Spray Leak from Underground Waste Transfer Lines	5.3.2.21
Tank Bump	5.3.2.22
Natural Phenomena - High Wind	5.3.2.23
Natural Phenomena - Lightning	5.3.2.23
Waste Transport Vehicle Accident	5.3.2.23
Natural Phenomena - Seismic	5.3.2.23
Aboveground Structure Failure	5.3.2.23

This page intentionally left blank.

TANK WASTE REMEDIATION SYSTEM
BASIS FOR INTERIM OPERATION

CONTENTS

1.0 INTRODUCTION 1-1
1.1 FACILITY MISSION 1-2
1.2 FACILITY BACKGROUND 1-2
1.3 DESCRIPTION OF AUTHORIZATION BASIS 1-3
1.3.1 Open Unreviewed Safety Questions 1-3
1.3.2 Authorization Basis Documents Annual Update 1-4
1.4 REFERENCES 1-4

2.0 FACILITY DESCRIPTION 2-1
2.1 STRUCTURES, SYSTEMS, AND COMPONENTS IMPORTANT TO SAFETY 2-1
2.1.1 Safety-Class Structures, Systems, and Components 2-2
2.1.2 Safety-Significant Structures, Systems, and Components 2-6
2.2 REFERENCES 2-8

3.0 RELEVANT OPERATIONAL HISTORY 3-1
3.1 SIGNIFICANT ABNORMAL OCCURRENCES 3-1
3.2 CHANGES TO STRUCTURES, SYSTEMS, AND COMPONENTS IMPORTANT TO SAFETY 3-2
3.3 SAFETY-RELATED FINDINGS FROM OPERATIONAL READINESS REVIEWS AND INSPECTIONS/AUDITS 3-2
3.3.1 Tank Farm Operations and Facilities Assessments by U.S. Department of Energy 3-3
3.3.2 Independent Oversight Evaluations 3-5
3.3.3 Internal Assessments 3-9
3.4 SUMMARY OF OPEN UNREVIEWED SAFETY QUESTIONS AND SAFETY ISSUES 3-12
3.4.1 Open Unreviewed Safety Questions 3-12
3.4.2 Safety Issues 3-15
3.5 REFERENCES 3-16

4.0 SAFETY MANAGEMENT 4-1
4.1 ORGANIZATIONAL STRUCTURE AND MANAGEMENT RESPONSIBILITIES . . . 4-3
4.2 STANDARDS/REQUIREMENTS IDENTIFICATION DOCUMENT 4-4
4.3 CRITICALITY PROTECTION 4-4
4.4 RADIOLOGICAL PROTECTION 4-5
4.5 HAZARDOUS MATERIAL PROTECTION 4-5
4.6 RADIOACTIVE AND HAZARDOUS MATERIAL WASTE MANAGEMENT 4-6
4.7 TESTING, SURVEILLANCE, AND MAINTENANCE 4-7
4.8 CONDUCT OF OPERATIONS 4-8
4.9 WORK CONTROL 4-8
4.10 FIRE PROTECTION PROGRAM 4-8
4.11 TRAINING AND PROCEDURES 4-9
4.12 QUALITY ASSURANCE 4-10
4.13 EMERGENCY PREPAREDNESS 4-11

CONTENTS (cont)

4.14 DECONTAMINATION AND DECOMMISSIONING 4-12
4.15 CONFIGURATION MANAGEMENT 4-12
4.16 OCCURRENCE REPORTING 4-13
4.17 UNREVIEWED SAFETY QUESTIONS 4-13
4.18 HUMAN FACTORS 4-14
4.19 REFERENCES 4-14

5.0 SAFETY ANALYSIS 5.0-1
5.1 HAZARD CLASSIFICATION 5.1-1
5.1.1 References 5.1-1
5.2 HAZARD ANALYSIS 5.2-1
5.2.1 Methodology 5.2-1
5.2.2 Hazard Analysis Results 5.2-6
5.2.3 References 5.2-13
5.3 ACCIDENT ANALYSIS 5.3.1-1
5.3.1 Methodology 5.3.1-1
5.3.1.1 Radiological Consequence Calculation Methodology 5.3.1-1
5.3.1.2 Toxicological Consequence Calculation Methodology 5.3.1-4
5.3.1.3 Basis for Estimating Accident Frequency 5.3.1-5
5.3.1.4 References 5.3.1-5

5.3.2 Accident Analysis Scenarios 5.3.2-1
5.3.2.1 Nuclear Criticality 5.3.2.1-1
5.3.2.2 HEPA Filter Failure - Exposure to High Temperature or Pressure 5.3.2.2-1
5.3.2.3 Fire In Contaminated Area 5.3.2.3-1
5.3.2.4 Evaporator Dump 5.3.2.4-1
5.3.2.5 Steam Intrusion From Interfacing Systems . . . 5.3.2.5-1
5.3.2.6 Leak from Railcar/Tank Trailer 5.3.2.6-1
5.3.2.7 Subsurface Leak Remaining Subsurface 5.3.2.7-1
5.3.2.8 Unplanned Excavation/Drilling in Crib/Ditch/Pond 5.3.2.8-1
5.3.2.9 Caustic Spray Leak 5.3.2.9-1
5.3.2.10 Sodium Fire 5.3.2.10-1
5.3.2.11 Mixing of Incompatible Material - Toxic Vapor Generation 5.3.2.11-1
5.3.2.12 Mixing of Incompatible Material - Tank Pressurization 5.3.2.12-1
5.3.2.13 Tank Failure Due to Excessive Loads 5.3.2.13-1
5.3.2.14 Flammable Gas Deflagrations 5.3.2.14-1
5.3.2.15 Organic Solvent Fire 5.3.2.15-1
5.3.2.16 In-Tank Fuel Fire/Deflagration 5.3.2.16-1
5.3.2.17 Organic Salt-Nitrate Reaction 5.3.2.17-1
5.3.2.18 Surface Leak Resulting in Pool 5.3.2.18-1
5.3.2.19 Subsurface Leak Resulting in Pool 5.3.2.19-1
5.3.2.20 Spray Leak in Structure or From Overground Waste Transfer Line 5.3.2.20-1
5.3.2.21 Spray Leak from Underground Waste Transfer Lines 5.3.2.21-1

CONTENTS (cont)

5.3.2.22 Tank Bump 5.3.2.22-1
5.3.2.23 Natural Phenomena 5.3.2.23-1
5.3.2.23.1 High Wind 5.3.2.23-1
5.3.2.23.2 Lightning 5.3.2.23-7
5.3.2.23.3 Seismic Events 5.3.2.23-11
5.4 ENGINEERED AND ADMINISTRATIVE CONTROLS 5.4-1
5.4.1 Control Decision Criteria 5.4-1
5.4.2 Public and Onsite Worker Protection 5.4-4
5.4.3 Facility Worker Protection 5.4-4
5.4.4 Environmental Protection 5.4-4
5.4.5 References 5.4-5

6.0 OPERATIONAL CONTROLS 6-1
6.1 BASIS FOR INTERIM OPERATION CONTROLS 6-1
6.1.1 Scope of Controls 6-1
6.1.2 Control Selection Process 6-2
6.1.3 Specific Basis for Interim Operation Controls 6-2
6.2 REFERENCES 6-3

7.0 CONCLUSIONS 7-1
7.1 GENERAL AND SPECIFIC CONCLUSIONS 7-1
7.2 SUMMARY CONCLUSIONS 7-3
7.3 REFERENCES 7-3

APPENDIXES:

A BASIS FOR INTERIM OPERATION DEVELOPMENT PROCESS . . . . . A-i
B FACILITY AND PROCESS DESCRIPTION B2-i
C SITE CHARACTERISTICS . . . . . C-i
D HAZARD ANALYSIS RESULTS REPORT . . . . . D-i
E FLAMMABLE GAS/SLURRY GROWTH UNREVIEWED SAFETY QUESTION: JUSTIFICATION FOR CONTINUED OPERATION FOR THE TANK FARMS AT THE HANFORD SITE . . . . . E-i
F SITEWIDE CONTROLLED MANUAL CROSS-REFERENCE TABLE . . . . . F-i

ADDENDA:

ADDENDUM 1 TANK 241-C-106 SLUICING SAFETY ANALYSIS
ADDENDUM 2 SAFETY ANALYSIS FOR THE REPLACEMENT CROSS-SITE TRANSFER SYSTEM
ADDENDUM 3 702-AZ VENTILATION SYSTEM (241-AZ-702) SAFETY ANALYSIS
ADDENDUM 4 MIXER PUMP TEST (241-AZ-101) SAFETY ANALYSIS

LIST OF FIGURES

5.3.2.1-1 Perspective of Hanford Site Waste Tank Subcritical Limits–Plutonium Critical Mass Versus Concentration (Spherical Geometry) 5.3.2.1-9

LIST OF TABLES

3-1 Safety Issues for the Tank Waste Remediation System T3-1

3-2 System Deficiencies for the Tank Waste Remediation System T3-2

5.1-1 Hazard Category for Tank Waste Remediation System Facilities . . 5.1-3

5.2-1 Frequency Categories for Tank Waste Remediation System Facilities 5.2-11

5.2-2 Consequence Categories for Tank Waste Remediation System Facilities 5.2-11

5.2-3 Applicable Hazard Evaluations for Tank Waste Remediation System Facilities 5.2-13

5.2-4 Natural Phenomena, External Events, and Common Cause Hazards for Tank Waste Remediation System Facilities 5.2-42

5.2-5 Representative Accidents Analyzed and Cross-Reference to Basis for Interim Operation Accident Analysis Sections 5.2-43

5.3.1-1 Representative Accidents Analyzed and Cross-Reference to Basis for Interim Operation Accident Analysis Sections . . . 5.3.1-7

5.3.1-2 Radiological Risk Guidelines 5.3.1-8

5.3.1-3 Toxicological Risk Guidelines 5.3.1-8

5.3.1-4 In-Tank Concentrations of the 11 Radionuclides Chosen for Inclusion in Accident Analysis 5.3.1-9

5.3.1-5 Unit Liter Doses for Tank Farm Composites 5.3.1-9

5.3.1-6 Composite Concentrations for the 24 Analytes at the Tank Waste Remediation System Tank Farms 5.3.1-10

5.3.1-7 Worst-Case and Maximum Steady-State Headspace Gas Composite Concentrations in the Tank Waste Remediation System 5.3.1-11

5.3.1-8 Sum-of-Fraction of Risk Guidelines for a Unit Release of Chemicals and Gases 5.3.1-12

LIST OF TABLES (cont)

5.3.2.1-1 H to Pu Atom Ratios 5.3.2.1-10

5.3.2.1-2 Subcritical Ratios 5.3.2.1-10

5.3.2.1-3 Radiological Consequences for Waste Tank Criticality 5.3.2.1-10

5.3.2.1-4 Summary of Toxicological Consequences for Nuclear Criticality Accident Scenario 5.3.2.1-11

5.3.2.1-5 Technical Safety Requirement Controls for Nuclear Criticality Accident Scenario 5.3.2.1-11

5.3.2.2-1 Consequences and Frequencies Assuming No Controls for High-Efficiency Particulate Air Filter Failure-Exposure to High Temperature 5.3.2.2-9

5.3.2.2-2 Consequences and Frequencies Assuming Controls for High-Efficiency Particulate Air Filter Failure-Exposure to High Temperature 5.3.2.2-10

5.3.2.2-3 Safety Structures, Systems, and Components for High-Efficiency Particulate Air Filter Failure—Exposure to High Temperature 5.3.2.2-11

5.3.2.2-4 Technical Safety Requirement Controls for High-Efficiency Particulate Air Filter Failure—Exposure to High Temperature 5.3.2.2-11

5.3.2.2-5 Defense-In-Depth Controls for High-Efficiency Particulate Air Filter Failure—Exposure to High Temperature 5.3.2.2-12

5.3.2.2-6 Total Radiological Dose Consequences Assuming No Controls for a High-Efficiency Particulate Air Filter Failure—Exposure to High Pressure from a Pressurized High-Efficiency Particulate Air Release Event and a Continuous, Unfiltered Release 5.3.2.2-13

5.3.2.2-7 Total Toxicological Exposure Consequences (Sum-of-Fractions) Assuming No Controls from High-Efficiency Particulate Air Filter Failure-Exposure to High Pressure and a Continuous, Unfiltered Release for an Accident Frequency of "Anticipated" 5.3.2.2-14

5.3.2.3-1 Consequences of a Fire in Contaminated Area Assuming No Controls. 5.3.2.3-4

5.3.2.3-2 Technical Safety Requirement Controls for Fire in Contaminated Area 5.3.2.3-4

LIST OF TABLES (cont)

5.3.2.3-3 Defense-In-Depth Controls for Potential Fire in Contaminated Area 5.3.2.3-5

5.3.2.4-1 Consequences of an Evaporator 242-A Dump to Tank 241-AW-102 . . . . . 5.3.2.4-4

5.3.2.4-2 Defense-in-Depth Controls for Evaporator 242-A Dump to Tank 241-AW-102 . . . . . 5.3.2.4-4

5.3.2.5-1 Consequences of a Steam Intrusion from Interfacing Systems 5.3.2.5-4

5.3.2.5-2 Technical Safety Requirement Controls for Steam Intrusion from Interfacing Systems 5.3.2.5-4

5.3.2.5-3 Defense-In-Depth Controls For Steam Intrusion from Interfacing Systems 5.3.2.5-5

5.3.2.6-1 Consequences of a Leak from a Railcar/Tank Trailer . . . 5.3.2.6-5

5.3.2.6-2 Technical Safety Requirement Controls for Potential Railcar/Tank Trailer Leaks at the 204-AR Waste Unloading Facility 5.3.2.6-5

5.3.2.6-3 Defense-in-Depth Controls for Potential Railcar and Tank Trailer Leaks at the 204-AR Waste Unloading Facility 5.3.2.6-6

5.3.2.7-1 Consequences of a Subsurface Leak Remaining Subsurface 5.3.2.7-4

5.3.2.7-2 Items Determined to be Safety-Significant by Extrapolating the Subsurface Leak Remaining Subsurface Accident Scenario to Other Applicable Tank Farm Transfer Equipment and Locations 5.3.2.7-4

5.3.2.7-3 Technical Safety Requirement Controls for Subsurface Leaks Remaining Subsurface 5.3.2.7-5

5.3.2.7-4 Defense-in-Depth Controls that Provide Defense-in-Depth for Potential Subsurface Leak Remaining Subsurface . . . 5.3.2.7-6

5.3.2.8-1 Radioactive Isotopes and Inventory Assumed Present in Crib 216-Z-20 . . . . . 5.3.2.8-4

5.3.2.8-2 The Toxicological Constituents and Concentrations Assumed Present in Crib 216-Z-20 . . . . . 5.3.2.8-4

5.3.2.8-3 Consequences of Unplanned Excavations or Drilling in Cribs, Ditches, and Ponds 5.3.2.8-5

LIST OF TABLES (cont)

5.3.2.8-4 Controls That Provide Defense-in-Depth For Potential Unplanned Excavations or Drilling in Cribs, Ditches, and Ponds 5.3.2.8-5

5.3.2.9-1 Consequences of a Caustic Spray Leak Assuming No Controls 5.3.2.9-4

5.3.2.9-2 Technical Safety Requirement Controls for Caustic Spray Leaks 5.3.2.9-4

5.3.2.9-3 Defense-in-Depth Controls for Caustic Spray Leaks . . . 5.3.2.9-5

5.3.2.10-1 Summary of Consequences and Frequencies for a Sodium Fire without Controls 5.3.2.10-4

5.3.2.10-2 Safety Structures, Systems, and Components for Sodium Fire 5.3.2.10-5

5.3.2.10-3 Defense-in-Depth Controls for Sodium Fire 5.3.2.10-5

5.3.2.11-1 Defense-in-Depth Controls for Chemical Reaction in Double-Contained Receiver Tank 5.3.2.11-3

5.3.2.12-1 Summary of Consequences and Frequencies for Mixing of Incompatible Waste—Tank Pressurization without Controls 5.3.2.12-3

5.3.2.12-2 Summary of Consequences and Frequencies for Mixing of Incompatible Waste—Tank Pressurization with Controls 5.3.2.12-3

5.3.2.12-3 Technical Safety Requirement Controls for Mixing of Incompatible Materials—Tank Pressurization 5.3.2.12-4

5.3.2.12-4 Safety Structures, Systems, and Components for Mixing of Incompatible Materials—Tank Pressurization 5.3.2.12-4

5.3.2.12-5 Defense-in-Depth Controls for Mixing of Incompatible Waste—Tank Pressurization 5.3.2.12-4

5.3.2.13-1 Consequences of a Load Drop Assuming No Controls . . 5.3.2.13-6

5.3.2.13-2 Technical Safety Requirement Controls for Load Drops 5.3.2.13-7

5.3.2.13-3 Defense-in-Depth Controls for Load Drops 5.3.2.13-9

5.3.2.14-1 Results Assuming No Controls Accident Scenario for Flammable Gas Deflagrations 5.3.2.14-10

LIST OF TABLES (cont)

5.3.2.14-2 Safety Systems, Structures, and Components for Flammable Gas Deflagrations 5.3.2.14-11

5.3.2.14-3 Technical Safety Requirement Controls for Flammable Gas Deflagrations 5.3.2.14-13

5.3.2.15-1 Organic Solvent Fire Accident Scenarios Applicable to Different Types of Tanks 5.3.2.15-11

5.3.2.15-2 Onsite Consequences of Organic Solvent Fire Scenarios Assuming No Controls and a Frequency of "Unlikely" 5.3.2.15-12

5.3.2.15-3 Offsite Consequences of Organic Solvent Accident Scenarios Assuming No Controls and a Frequency of "Unlikely" 5.3.2.15-13

5.3.2.15-4 Summary of Accident Frequencies for Organic Solvent Fires Assuming No Controls 5.3.2.15-14

5.3.2.15-5 Technical Safety Requirement Controls for Organic Solvent Fires 5.3.2.15-15

5.3.2.15-6 Organic Solvent Fire Topography 5.3.2.15-16

5.3.2.15-7 Defense-in-Depth Controls for Toxic Vapor Nitrate Fires. 5.3.2.15-21

5.3.2.16-1 Unmitigated Consequences of Vehicle Fuel Pool Fire . . 5.3.2.16-7

5.3.2.16-2 Technical Safety Requirement Controls for Vehicle Fuel Fire/Deflagration 5.3.2.16-7

5.3.2.16-3 Defense-in-Depth Controls of Vehicle Fuel Fire/Deflagration 5.3.2.16-8

5.3.2.17-1 Organic-Nitrate Waste Grouping 5.3.2.17-12

5.3.2.17-2 Summary of Organic-Nitrate Condensed Phase Ignition Source Evaluation 5.3.2.17-13

5.3.2.17-3 Radiological and Toxicological Consequences for 25 m^3 Organic-Nitrate Combustion Accident (No controls in place - accident is "unlikely") 5.3.2.17-14

5.3.2.17-4 Radiological and Toxicological Consequences for 25 m^3 Organic-Nitrate Combustion Accident (Controls in place - Accident is "extremely unlikely") 5.3.2.17-14

LIST OF TABLES (cont)

5.3.2.17-5 Technical Safety Requirement Controls for Organic-Nitrate Condensed-Phase Combustion Accidents 5.3.2.17-15

5.3.2.17-6 Defense-in-Depth Controls for Organic-Salt Nitrate Reactions 5.3.2.17-18

5.3.2.17-7 Safety Structures, Systems, and Components for Organic Salt-Nitrate Reaction 5.3.2.17-19

5.3.2.18-1 Consequences of Surface Leak Resulting in Pool Assuming No Controls 5.3.2.18-7

5.3.2.18-2 Consequences of Surface Leak Resulting in Pool Assuming Controls 5.3.2.18-7

5.3.2.18-3 Safety Structures, Systems, and Components for Surface Leak Resulting in Pool 5.3.2.18-8

5.3.2.18-4 Technical Safety Requirement Controls for Surface Leak Resulting in Pool 5.3.2.18-10

5.3.2.18-5 Defense-in-Depth Controls for Surface Leak Resulting in Pool 5.3.2.18-13

5.3.2.19-1 Consequences of a Subsurface Leak Resulting in Pool Assuming No Controls 5.3.2.19-6

5.3.2.19-2 Consequences of a Subsurface Leak Resulting in Pool Assuming Controls 5.3.2.19-6

5.3.2.19-3 Safety Structures, Systems, and Components for Subsurface Leak Resulting in Pool 5.3.2.19-7

5.3.2.19-4 Technical Safety Requirement Controls for Subsurface Leak Resulting in Pool 5.3.2.19-7

5.3.2.19-5 Defense-in-Depth Controls for Subsurface Leak Resulting in Pool 5.3.2.19-8

5.3.2.20-1 Summary of Consequences and Frequencies without Controls 5.3.2.20-6

5.3.2.20-2 Summary of Consequences and Frequencies with Controls 5.3.2.20-6

5.3.2.20-3 Safety Structures, Systems, and Components for Spray Leaks 5.3.2.20-7

5.3.2.20-4 Technical Safety Requirement Controls for Spray Leaks 5.3.2.20-9

LIST OF TABLES (cont)

5.3.2.20-5 Defense-in-Depth Controls for Transfer System Spray Leaks 5.3.2.20-11

5.3.2.21-1 Technical Safety Requirement Controls for Spray Leak and Surface Pools from Underground Waste Transfer Lines 5.3.2.21-3

5.3.2.21-2 Defense-in-Depth Controls for Spray Leak and Surface Pools from Underground Waste Transfer Lines . . 5.3.2.21-4

5.3.2.22-1 Consequences of a Tank Bump Assuming No Controls . . . 5.3.2.22-5

5.3.2.22-2 Safety Structures, Systems, and Components for Tank Bumps 5.3.2.22-5

5.3.2.22-3 Technical Safety Requirement Controls for Tank Bumps 5.3.2.22-6

5.3.2.22-4 Defense-in-Depth Controls for Tank Bumps 5.3.2.22-7

5.3.2.23.1-1 Estimates of Peak Wind Gusts and Frequencies of Occurrence at the Hanford Site 5.3.2.23-16

5.3.2.23.1-2 Consequences of Flexible Receiver Bag Failure . . . 5.3.2.23-16

5.3.2.23.1-3 Technical Safety Requirement Controls for High Winds 5.3.2.23-16

5.3.2.23.1-4 Defense-in-Depth Controls for High Wind 5.3.2.23-17

5.3.2.23.2-1 Technical Safety Requirement Controls for Lightning as an Accident Initiator 5.3.2.23-17

5.3.2.23.2-2 Defense-in-Depth Controls for Lightning as an Accident Initiator 5.3.2.23-18

5.3.2.23.3-1 Technical Safety Requirement Controls for Seismic Event 5.3.2.23-18

5.4-1 Safety Structures, Systems, and Components and Technical Safety Requirements for Potential S3 and S2 Consequences . . 5.4-7

5.4-2 Safety Structures, Systems, and Components and Technical Safety Requirements for Potential S1 Consequences with F3 Frequency 5.4-114

5.4-3 Safety Structures, Systems, and Components and Technical Safety Requirements for Potentially Severe (E3 and E2) Environmental Consequences 5.4-161

LIST OF TABLES (cont)

6-1 Hazard and Accident Analyses; Safety Structures, Systems, and Components; and Technical Safety Requirement Cross Reference T6-1

7-1 Listing of Considerations to Further Reduce Risk T7-1

This page intentionally left blank.

CHAPTER 1.0
INTRODUCTION

This page intentionally left blank.

CHAPTER 1.0
INTRODUCTION

CONTENTS

1.0 INTRODUCTION 1-1
1.1 FACILITY MISSION 1-2
1.2 FACILITY BACKGROUND 1-2
1.3 DESCRIPTION OF AUTHORIZATION BASIS 1-3
1.3.1 Open Unreviewed Safety Questions 1-3
1.3.2 Authorization Basis Documents Annual Update 1-4
1.4 REFERENCES 1-4

LIST OF TERMS

BIO	Basis for Interim Operation
DOE	U.S. Department of Energy
DST	double-shell tank
HLW	high-level waste
LAW	low-activity waste
RCRA	*Resource Conservation and Recovery Act of 1976*
RL	U.S. Department of Energy, Richland Operations Office
SST	single-shell tank
TSR	Technical Safety Requirement
TWRS	Tank Waste Remediation System
USQ	Unreviewed Safety Question

1.0 INTRODUCTION

This Basis for Interim Operation (BIO) document, with its companion Technical Safety Requirements (TSR) document (HNF-SD-WM-TSR-006, *Tank Waste Remediation System Technical Safety Requirements)*, provides the basis for interim operation of the Hanford Site Tank Waste Remediation System (TWRS). The BIO will remain in effect until replaced by the TWRS Final Safety Analysis Report and the revised TSR document, which are currently being prepared in accordance with the requirements of U.S. Department of Energy (DOE) orders DOE 5480.23, *Nuclear Safety Analysis Reports*, and DOE 5480.22, *Technical Safety Requirements*. The overall strategy for preparing the BIO is based on DOE-STD-3011-94, *Guidance for Preparation of DOE 5480.22 (TSR) and DOE 5480.23 (SAR) Implementation Plans*.

The objective of this BIO is to provide an improved interim Authorization Basis that enhances safe operation of the Hanford Site TWRS facilities by providing an improved basis for interim operation and operational controls. This BIO provides a cohesive, integrated interim Authorization Basis that supersedes numerous safety documents, thus minimizing inconsistencies and the potential for error and confusion. The details of how the BIO was developed are in Appendix A, "Basis for Interim Operation Development Process."

This BIO applies to the following TWRS equipment and facilities:

- 177 underground high-level waste (HLW) tanks including single-shell (149) and double-shell (28) tanks in the 200 East and 200 West Areas
- Catch tanks
- Double-contained receiver tanks
- Waste transfer system
- 2727-W Sodium Storage Facility
- 204-AR Waste Unloading Facility
- 244-AR Vault
- Miscellaneous inactive storage facilities
- 209-E Mixed Waste less than 90-Day *Resource Conservation and Recovery Act of 1976* waste storage pads
- Cribs, ditches and ponds
- Push mode sampling
- Light duty utility arm
- Cone Penetrometer

- Rotary Mode Core Sampling (Flammable Gas Hazards)
- 213-W Dry Waste Compactor Facility
- Vertical storage units within the tank farm boundaries

See Appendix B, "Facility and Process Description," for details about these facilities.

The BIO analyzed the 242-S and 242-T Evaporators only for flammable gas hazards, as documented in Appendix E, "Flammable Gas/Slurry Growth Unreviewed Safety Question: Justification for Continued Operation for the Tank Farms at the Hanford Site." Appendix E provides the Justification for Continued Operation for the flammable gas hazard and includes controls applying to 242-S and 242-T. The applicable controls are not included in the TSRs and must be implemented prior to the initiation of intrusive activities or waste disturbing activities. All other hazards that apply to the 242-S and 242-T Evaporators are outside the scope of the BIO.

1.1 FACILITY MISSION

The TWRS mission, as described in HNF-SD-WM-MAR-008, *TWRS Mission Analysis Report*, is divided into two phases. Phase 1 retrieval and disposal activities will continue to safely store TWRS remaining tank wastes, demonstrate the capability to retrieve waste from DSTs and SSTs, immobilize and dispose of the low-activity waste (LAW) and immobilize and store the HLW from the DSTs, and safely store retrieved SST waste in the DSTs until Phase 2 commences. Phase 2 retrieval and disposal efforts will (1) continue to safely store TWRS tank waste until removal; (2) completely remove tank wastes, process the cesium and strontium capsules, immobilize LAW and HLW, dispose of the LAW, and provide the interim storage and subsequent transfer of immobilized HLW to the national geologic repository; (3) close the tank farms and clean up, decontaminate, and decommission the unneeded facilities; and (4) maintain long-term surveillance of the LAW disposal facilities. The BIO establishes an improved Authorization Basis for selected facilities and activities of the tank waste management function of the TWRS mission analysis. These activities include the storage, characterization, and transfer of tank wastes in a manner that complies with environmental regulations and minimizes public and worker risk.

1.2 FACILITY BACKGROUND

Between 1944 and 1980, Hanford Site production operations generated large amounts of solid and liquid radioactive mixed waste. Chemical processing of irradiated uranium fuels generated alkaline slurries containing heavy metals, organic solvents, inorganic salts, uranium, plutonium, and mixed fission products. While cooling water, condensates, and other low-level wastes from processing operations were discharged to the ground, high-level wastes were placed in large underground tanks for temporary storage. The first 149 tanks were constructed between 1943 and 1964. These tanks formed a total of 12 farms consisting of 4 to 18 tanks in each farm. Location of these farms is divided between the 200 East and 200 West Areas. The original tank design

comprises a single, reinforced-concrete shell and dome with mild carbon steel lining the bottom and walls. The capacity of these single-shell tanks ranges from approximately 208,000 to 3.79 million L (55,000 to 1 million gal). Between 1968 and 1986, 28 double-shell tanks were built in 6 tank farms with 2 to 8 tanks in each farm. Five of these tank farms are located in the 200 East Area, and one is located in the 200 West Area. Each of the double-shell tanks comprises a carbon-steel primary tank and a carbon-steel secondary tank in a protective reinforced-concrete shell. The capacity of these double-shell tanks is approximately 3.79 million L (1 million gal) each.

The ancillary systems, facilities, and equipment that support operations performed in the tank farms (both single-shell and double-shell tank farms) include underground and aboveground waste transfer pipelines, valves, diversion boxes, jumper connectors, waste transfer pumps, double-contained receiver tanks, catch tanks, process pits, the 204-AR Waste Unloading Facility, and the 244-AR Vault. Other ancillary systems include miscellaneous storage facilities that are now inactive.

1.3 DESCRIPTION OF AUTHORIZATION BASIS

Portions of the previously existing TWRS Authorization Basis, as defined in Chapter 6.0, "Operational Controls" from WHC-SD-WM-ISB-001, *Hanford Site Tank Farm Facilities Interim Safety Basis*, are superseded by the BIO and its associated TSR document. The list of TWRS Authorization Basis documents is maintained in the TWRS Unreviewed Safety Question (USQ) procedure (HNF-IP-0842, "TWRS Administration," Vol. IV, Section 5.4, "Unreviewed Safety Questions").

The principal TWRS Authorization Basis documents are the BIO and the TSR document. Other Authorization Basis documents include U.S. Department of Energy, Richland Operations Office (RL) letters that approved the use of contractor-controlled documents as part of the Authorization Basis, RL letters that provide Authorization Basis controls, and Safety Evaluation Reports.

During initial implementation of the BIO and the TSRs, each document and individual control from the previous Authorization Basis was compared to the BIO and the TSR to determine whether its content, basis, and applicability were addressed in the new documents (HNF-SD-WM-RPT-303, *Authorization Basis Requirements Comparison Report)*. The results of this comparison were used to define the new Authorization Basis.

1.3.1 Open Unreviewed Safety Questions

There are presently three open USQs applicable to TWRS. They concern the following issues:

- Condensed-phase organic nitrate reactions
- Flammable gas and slurry growth
- Waste surface level change in Tank 241-SY-101.

The condensed-phase organic nitrate reaction has been declared a USQ. Results of an analysis are documented in Chapter 5.0, "Safety Analysis" and address the condensed-phase organic nitrate reactions USQ issues.

The original USQ on Tank 241-SY-101 for flammable gas and slurry growth has been closed (Kinzer 1996, *Closure of Hanford Tank 241-SY-101 Flammable Gas Unreviewed Safety Question [USQ]*). LA-UR-92-3196, *A Safety Assessment for Proposed Mixing Pump Operations to Mitigate Episodic Gas Releases in Tank 241-SY-101*, provides the basis for the Tank 241-SY-101 mixer pump operation which allowed this USQ to be closed. The justification for continued operation prepared to support the USQ for flammable gas and slurry growth for all other tanks containing flammable gas has been approved by DOE and is included as Appendix E.

A USQ has been declared related to the unexplained level growth in Tank 241-SY-101. The waste surface level in the tank has risen and does not respond to the mixer pump operation. This situation was not evaluated in LA-UR-92-3196. DOE declared this USQ on February 26, 1998 (Kinzer, 1998, *Declaration of an Unreviewed Safety Question (USQ) Related to Waste Surface Level Changes in Tank 241-SY-101*). Single-Shell Tanks Standing Order 98-15 has been issued to ensure that routine operations continue to maintain the facility in a safe condition.

The details of the technical issues addressed by these USQs are provided in Chapter 3.0, "Relevant Operational History" and the controls from these USQs are described in Chapter 5.0, "Safety Analysis."

1.3.2 Authorization Basis Documents Annual Update

DOE 5480.23, Section 9.c requires an annual update to applicable Authorization Basis documents. The annual update is a mechanism for revising the Authorization Basis to incorporate previously approved changes, changes to the facility configuration, non-technical editorial changes, and other changes that do not require DOE approval. Annual updates must reflect all changes implemented up to six months prior to the submission of the update to DOE. The annual update must include, as a minimum, USQs that have been approved by DOE, amendments to the TSRs, and materials submitted to DOE in support of the noted changes.

1.4 REFERENCES

DOE 5480.22, 1996, *Technical Safety Requirements*, Change 2, U.S. Department of Energy, Washington, D.C.

DOE 5480.23, 1994, *Nuclear Safety Analysis Reports*, Change 1, U.S. Department of Energy, Washington, D.C.

DOE-STD-3011-94, 1994, *Guidance for Preparation of DOE 5480.22 (TSR) and DOE 5480.23 (SAR) Implementation Plans*, Change 0, U.S. Department of Energy, Washington, D.C.

HNF-IP-0842, 1998, *TWRS Administration*, Fluor Daniel Hanford, Inc., Richland, Washington.

HNF-SD-WM-MAR-008, 1998, *TWRS Mission Analysis Report*, Rev. 3, Lockheed Martin Hanford Corporation, Richland, Washington.

HNF-SD-WM-RPT-303, 1997, *Authorization Basis Requirements Comparison Report*, Rev. 0, Duke Engineering and Services, Hanford, Inc., Richland, Washington.

HNF-SD-WM-TSR-006, 1997, *Tank Waste Remediation System Technical Safety Requirements*, Rev. 0, Fluor Daniel Hanford, Inc., Richland, Washington.

Kinzer, J. E., 1996, *Closure of Hanford Tank 241-SY-101 Flammable Gas Unreviewed Safety Question (USQ)* (memo WSD:CAG 96-WSD-065 to M. A. Hunemuller, June 21), U.S. Department of Energy, Richland Operations Office, Richland, Washington.

Kinzer, J. E., 1998, *Declaration of an Unreviewed Safety Question (USQ) Related to Waste Surface Level Changes in Tank 241-SY-101* (letter 98-WSD-040 to H. J. Hatch, Fluor Daniel Hanford, Inc., February 26), U.S. Department of Energy, Richland Operations Office, Richland, Washington.

LA-UR-92-3196, 1995, *A Safety Assessment for Proposed Mixing Pump Operations to Mitigate Episodic Gas Releases in Tank 241-SY-101: Hanford Site, Richland, Washington*, Rev. 14, Los Alamos National Laboratory, Los Alamos, New Mexico.

Resource Conservation and Recovery Act of 1976, 42 U.S.C. 6901, et seq.

Single-Shell Tanks Standing Order 98-15, February 12, 1998, *Operations in Tank 241-SY-101*, Rev. 0, Lockheed Martin Hanford Corp., Richland, Washington.

WHC-SD-WM-ISB-001, 1993, *Hanford Site Tank Farm Facilities Interim Safety Basis*, Rev. 0, Westinghouse Hanford Company, Richland, Washington.

This page intentionally left blank.

CHAPTER 2.0
FACILITY DESCRIPTION

This page intentionally left blank.

CHAPTER 2.0
FACILITY DESCRIPTION

CONTENTS

2.0 FACILITY DESCRIPTION 2-1
2.1 STRUCTURES, SYSTEMS, AND COMPONENTS IMPORTANT TO SAFETY 2-1
2.1.1 Safety-Class Structures, Systems, and Components 2-2
2.1.2 Safety-Significant Structures, Systems, and Components 2-6
2.2 REFERENCES 2-8

LIST OF TERMS

AWF	Aging Waste Facility
DCRT	double-contained receiver tank
DOE	U.S. Department of Energy
DST	double-shell tank
HEPA	high-efficiency particulate air (filter)
SSC	structure, system, and component
SST	single-shell tank
TWRS	Tank Waste Remediation System
WRSS	Waste Retrieval Sluicing System

2.0 FACILITY DESCRIPTION

The Tank Waste Remediation System (TWRS) facilities are located throughout the 200 East, 200 West, and 600 Areas on the Hanford Site.

A description of site characteristics necessary for understanding the TWRS and Hanford Site environs is included as Appendix C of this Basis for Interim Operation document. A description of TWRS facilities and operations is included as Appendix B, "Facility and Process Description." Supplemental project-specific facility descriptions are included in the designated addenda. A description of the Waste Retrieval Sluicing System (WRSS) is provided in Addendum 1, "Tank 241-C-106 Sluicing Safety Analysis." A description of the replacement cross-site transfer system is provided in Addendum 2, "Safety Analysis for the Replacement Cross-Site Transfer System." A description of the 702-AZ ventilation system is provided in Addendum 3, "702-AZ Ventilation System (241-AZ-702) Safety Analysis." A description of the modification to Tank 241-AZ-101 to perform the mixer pump test is provided in Addendum 4.

2.1 STRUCTURES, SYSTEMS, AND COMPONENTS IMPORTANT TO SAFETY

The controls selected for each accident are described in Chapter 5.0, "Safety Analysis," and summarized in Chapter 6, "Operational Controls." The selection process follows the structures, systems, and components (SSCs) classification methodology described in WHC-CM-4-46[1], *Safety Analysis Manual*, and Dunford (1996), *Tank Waste Remediation System Final Safety Analysis Report Selection of Safety Structures, Systems, and Components; and Technical Safety Requirements*. Section 5.4.1 "Control Decision Criteria," provides an additional description of the control decision criteria used to classify SSCs.

SSCs important to safety are classified as either Safety-Class or Safety-Significant; all other SSCs are considered to be general services. Safety-Class SSCs prevent or mitigate releases to the public that would otherwise exceed the offsite radiological risk guidelines or prevent accidental nuclear criticality. Those items that support the safety function of Safety-Class SSCs are considered as Safety-Class.

DOE-STD-1027-92, *Hazard Categorization and Accident Analysis Techniques for Compliance with DOE Order 5480.23, Nuclear Safety Analysis Reports*, states that the requirements of 29 CFR 1910.119, "Process Safety Management of Highly Hazardous Chemicals," apply when analyses of chemical hazards show the potential for significant offsite consequences. The TWRS hazard and accident analyses have identified no SSCs required solely to prevent or mitigate the release of toxic chemicals to the offsite public.

---

[1]Refer to Appendix F, "Site-wide Controlled Manual Cross Reference Table," of the BIO for cross-walk between Site-wide controlled manuals (e.g., WHC-CM-X-XX) superseded by Fluor Daniel Hanford, Inc., Procedures (e.g., HNF-PRO-XXX).

Safety-Significant SSCs prevent or mitigate releases of radiological materials to onsite workers and toxic chemicals to the offsite public and onsite workers. Barriers judged to substantially contribute to Defense-in-Depth, independent of quantitative analysis, are designated Safety-Significant SSCs. Safety-Significant SSCs are also selected to protect the facility worker from serious injury caused by hazards, exclusive of standard industrial hazards. Those items that support the safety function of a Safety-Significant SSC are also considered as Safety-Significant. SSCs that serve more than one safety function are classified for the higher function (e.g., a fan with a Safety-Class cooling function and Safety-Significant ventilation function is classified as Safety-Class).

The classification of SSCs is often at the system level. The Design Authority[2] determines the components required to perform the system function including supporting SSCs in developing the safety equipment list (Appendix A, "Basis for Interim Operation Development Process"). The SSCs must meet as a minimum the design and functional requirements used in the accident analysis. The safety function for the designated SSCs is described in this chapter.

Double-shell tanks (DSTs) (including Aging Waste Facility [AWF] tanks), single-shell tanks (SSTs), and their associated waste transfer systems[3] are not included in the list of Safety-Class or Safety-Significant SSCs in this chapter. The classification of these passive design features as Safety-Class, Safety-Significant, or General Service will be provided in the TWRS Final Safety Analysis Report.

2.1.1 Safety-Class Structures, Systems, and Components

Following is a summary of SSCs that perform a Safety-Class function. For more details on the identification of Safety-Class SSCs, refer to Chapter 5.0. Supplemental SSCs specific to the construction projects are included in the designated addenda. Addendum 1 includes a description of the supplemental SSCs for WRSS. Addendum 2 includes a description of the supplemental SSCs for the replacement cross-site transfer system. Addendum 3 includes a description of the supplemental SSCs for the 702-AZ ventilation system. Addendum 4 includes a description of the Supplemental SSCs for the 241-AZ-101 mixer pump test.

2.1.1.1 Transfer System Covers. The safety function of transfer system covers (for process pits, diversion boxes, vault pits, and cleanout boxes), credited in the spray leak in structures or from overground waste transfer lines accident analysis, is to provide a physical barrier to knock down spray and limit release of aerosols to the atmosphere in case of a release during a transfer.

---

[2]The design authority function is assigned to qualified personnel within the TWRS engineering organization.

[3]Double-contained receiver tanks, catch tanks, process pits, diversion boxes, vault pits, cleanout boxes, and transfer lines.

The diversion boxes, vault pits, and cleanout boxes are described in Appendix B. The process pits for DSTs, SSTs, and other storage tanks are described in Appendix B. The discussion applies to all waste transfer systems including DST and SST transfer systems in the 200 East and 200 West Areas, the original cross-site transfer system, and the processing plant transfer systems (lines from the Plutonium Uranium Extraction Plant, B Plant, T Plant, 222-S Laboratory, U Plant, the Plutonium Finishing Plant, and the 204-AR Waste Unloading Facility).

Potential sites of spray leaks include piping and jumpers in the process pits, diversion boxes, vault pits, and cleanout boxes of DSTs (including AWF tanks) and SSTs; encasement risers; raw water supply system components; SST overground waste transfer lines; and 204-AR Waste Unloading Facility.

2.1.1.2 Pressure Switch Interlock(s) or Alarm to Waste Transfer Pumps (Raw Water and Other Water Service Supply Lines). The safety function of the pressure switch interlocks to waste transfer pumps, credited in the spray leak in structures or from overground waste transfer lines and surface leak resulting in pool accident analyses, is to prevent backflow of waste into interconnecting systems. The pressure switch interlocks to waste transfer pumps are described in Appendix B.

2.1.1.3 Stack Continuous Air Monitor and Interlock to Exhaust Fan on 204-AR Waste Unloading Facility. The safety function of the stack continuous air monitor and interlock to exhaust fan, credited in the spray leak in structures or from overground waste transfer lines accident analysis, is to detect radioactivity caused by failure of a high-efficiency particulate air (HEPA) filter and the shut-off of the exhaust fan at the 204-AR Waste Unloading Facility. The stack continuous air monitor and interlock to exhaust fan are described in Appendix B.

2.1.1.4 Overground Waste Transfer Line Concrete Shielding System. The safety function of the overground waste transfer line concrete shielding system, credited in the spray leak in structures or from overground waste transfer lines and surface leak resulting in pool accident analyses, is to protect the overground waste transfer line from external events. The overground waste transfer line concrete shielding (protection) system is described in Appendix B.

2.1.1.5 Transfer Leak Detection System. The safety function of the transfer leak detection system, credited in the surface leak resulting in pool accident analysis, is to detect waste accumulation in the pits and the transfer pump auto stop or alarm function.

The transfer leak detectors are described in Appendix B. The discussion applies to waste transfer-associated structures (process pits, diversion boxes, vault pits, and cleanout boxes).

2.1.1.6 Overground Waste Transfer Line Encasements and Connections. The safety function of the overground waste transfer line encasements and connections, credited in the surface leak resulting in pool and spray leak in structures or overground waste transfer lines accident analyses, is to confine waste leaked from the primary pipe (barrier). The overground waste transfer line encasements and connections are described in Appendix B.

2.1.1.7 Primary Tank Leak Detection for Double-Shell Tanks. The safety function of the annulus leak detector in a DST, credited in the surface leak resulting in pool and flammable gas deflagration accident analyses, is to detect waste accumulation in the DST annulus. Annulus leak detection for DSTs is described in Appendix B.

2.1.1.8 Mixer Pump on Tank 241-SY-101. The safety function of the mixer pump in Tank 241-SY-101, credited in the flammable gas deflagration accident, is to release flammable gases trapped in the waste by mixing the waste. The mixer pump in Tank 241-SY-101 is described in Appendix B.

2.1.1.9 Level Monitors on Tank 241-SY-101. The safety function of the level monitors on Tank 241-SY-101, credited in the flammable gas deflagration accident, is to provide an indication of tank waste level, which directs the operation of the mixer pump. The level monitoring system for DSTs is described in Appendix B.

2.1.1.10 Hydrogen Monitor on Tank 241-SY-101. The safety function of the hydrogen monitor on Tank 241-SY-101, credited in the flammable gas deflagration accident, is to indicate and alarm for hydrogen gas concentration in the vapor space and to activate an interlock to stop mixer pump operation if hydrogen concentration reaches 0.75% (7,500 ppm) by volume, thereby preventing operation of the pump during a gas release event. The standard hydrogen monitoring system is described in Appendix B.

2.1.1.11 Pressure Monitor on Tank 241-SY-101. The safety function of the pressure monitor on Tank 241-SY-101, credited in the flammable gas deflagration accident, is to indicate that the ventilation system is operating, ensuring that hydrogen concentration is minimized during mixer pump operation. The pressure monitoring system for DSTs is described in Appendix B.

2.1.1.12 Ventilation Flowmeter on Tank 241-SY-101. The safety function of the ventilation flowmeter on Tank 241-SY-101, credited in the flammable gas deflagration accident, is to indicate the ventilation flow rate and to provide alarm capability to ensure that the mixer pump operation is stopped if ventilation flow is too high or too low. Primary tank ventilation systems are described in Appendix B.

2.1.1.13 Ammonia Detection System on Tank 241-SY-101. The safety function of the ammonia detection system on Tank 241-SY-101, credited in the flammable gas deflagration accident, is to detect the ammonia in the tank headspace/exhaust gas and alarm on the Data Acquisition Control System when a high level of ammonia exists. The ammonia detection system on Tank 241-SY-101 is described in Appendix B.

2.1.1.14 Temperature Monitors on Tank 241-SY-101. The safety function of the temperature monitors on Tank 241-SY-101, credited in the flammable gas deflagration accident, is to indicate the temperature of the tank waste and alarm if the temperature reaches a preset limit. The temperature monitoring system for DSTs is described in Appendix B.

2.1.1.15 Ventilation System on DSTs. The safety function of the ventilation system on DSTs, credited in the flammable gas deflagration accident, is to provide sufficient ventilation into the headspace of the tank to maintain flammable gas concentration below 25% of the lower flammability limit. The ventilation system for DSTs is described in Appendix B.

2.1.1.16 Active Ventilation System on SSTs. The safety function of the active ventilation system on SSTs, credited in the flammable gas deflagration accident, is to provide sufficient ventilation into the headspace of the tank to maintain flammable gas concentration below 25% of the lower flammability limit. The active ventilation system for SSTs is described in Appendix B.

2.1.1.17 Waste Level Dip Tube Air Flow Indicator in Double-Contained Receiver Tanks. The safety function of the waste level dip tube air flow indicator in double-contained receiver tanks (DCRTs), credited in the flammable gas deflagration accident, is to provide sufficient ventilation into headspace of the tank to maintain flammable gas concentration below 25% of the lower flammability limit. Where the level dip tubes are used for ventilation, the safety function is to provide inlet air flow to the DCRTs. The waste level dip tube air flow indicator for DCRTs is described in Appendix B. This discussion applies to the following DCRTs: 244-A, 244-BX, 244-CR, 244-S, 244-TX, 244-U.

2.1.1.18 Dip Tube Air Flow Indicator on 244-AR Vault (TK-002). The safety function of the dip tube air flow indicator on 244-AR Vault (TK-002), credited in the flammable gas deflagration accident, is to provide sufficient ventilation into the headspace of the tank to maintain flammable gas concentration below 25% of the lower flammability limit. The ventilation system for the 244-AR Vault (TK-002) is described in Appendix B.

2.1.1.19 Waste Transfer Pipe Encasements. The safety function of the pipe encasements, credited in the subsurface leak resulting in pool accident, is to ensure that a leak in the primary waste transfer system piping is directed to a waste transfer-associated structure. Pipe encasements are described in Appendix B.

2.1.1.20 Stack Continuous Air Monitor and Interlock to Exhaust Fan on All Actively Ventilated Tanks. The safety function of the stack continuous air monitor and interlock to exhaust fan, credited in the spray leak in structure or from overground waste transfer line accident analysis, is to detect radioactivity caused by a failure of a HEPA filter and to shut off the exhaust fan for all actively ventilated tanks. The stack continuous air monitor and interlock to exhaust fan is described in Appendix B.

2.1.1.21 Passive Ventilation System on SSTs. The safety function of the passive ventilation system on SSTs, credited in the flammable gas deflagration accident, is to provide sufficient ventilation into headspace of the tank to maintain flammable gas concentration below 25% of the lower flammability limit. The passive ventilation system for SSTs is described in Appendix B.

2.1.1.22 Supplemental Covers. The safety function of supplemental covers, required for the spray leak accident, is to contain liquid spraying from a covered process pit. The accident will then be bounded by the surface leak

resulting in pool analysis (HNF-2296, *Justification for Continued Operation of Transfer Lines Having Structures With Less Volume Than the 241-A-A Valve Pit).* Supplemental covers are described in Appendix B.

2.1.2 Safety-Significant Structures, Systems, and Components

The following is a summary of SSCs that perform a Safety-Significant function. For more details on the identification of Safety-Significant SSCs, refer to Chapter 5.0. Supplemental SSCs specific to the project authorization bases are included in the designated addenda. Addendum 4 includes a description of the supplemental SSCs for the 241-AZ-101 mixer pump test.

2.1.2.1 High-Efficiency Particulate Air Filters in Double-Contained Receiver Tanks 244-A, 244-S, and 244-TX. The safety function of the HEPA filters, credited in the mixing of incompatible material-tank pressurization accident analysis, is to remove airborne particulates in the effluent from DCRTs. The HEPA filters in the DCRTs are described in Appendix B.

2.1.2.2 Continuous Air Monitor Interlock. The safety function of the continuous air monitor interlock on the ventilation system of DSTs (including AWF tanks) and SSTs (active ventilation only), credited in the HEPA filter failure-exposure to high temperature or pressure accident analysis, is to detect radioactivity and to close the ventilation systems for DSTs (including AWF tanks), and SSTs (active ventilation only). The continuous air monitor interlock on the ventilation systems of DSTs (including AWF tanks) and SSTs (active ventilation only) is described in Appendix B.

2.1.2.3 Raw Water or Service Water System Backflow Preventers. The safety function of backflow preventers, credited in the spray leak in structures or from overground waste transfer lines accident analysis, is to prevent the backflow of waste into raw water or service water systems. The raw water and service water system backflow preventers are described in Appendix B.

2.1.2.4 204-AR Waste Unloading Facility Building. The safety function of the building at the 204-AR Waste Unloading Facility, credited in the spray leak in structures or from overground waste transfer lines accident analysis, is to knock down/confine spray within the facility from the potential releases from leaks. The building at the 204-AR Waste Unloading Facility is described in Appendix B.

2.1.2.5 Temperature Monitoring System. The safety function of the temperature monitors, credited in the tank bump accident analysis and also for protection from a postulated "chemical runaway" accident, is to provide temperature monitoring for DSTs (including AWF tanks) and the following SSTs: 241-C-106, 241-SX-103, 241-SX-107–112, and 241-SX-114. The temperature monitoring systems for DSTs (including AWF tanks) and SSTs are described in Appendix B.

2.1.2.6 Tank Level Monitors. The safety function of level monitors, credited in subsurface leak resulting in pool, surface leak resulting in pool, and

subsurface leak remaining subsurface accident analyses, is to indicate the waste level in the tank to support material balance calculations during waste transfers.

The waste tank level monitors are described in Appendix B. The discussion applies to waste transfers through single-walled direct-buried lines, concrete-encased lines, and pipe-in-pipe encased lines; waste storage tanks (DCRTS, DSTs [including AWF tanks], SSTs, catch tanks, and miscellaneous inactive storage facilities); the 244-AR Vault; the 204-AR Waste Unloading Facility; and waste transfer-associated structures (process pits, diversion boxes, vault pits, cleanout boxes).

2.1.2.7 Salt Well Flow Totalizer. The safety function of salt well flow totalizer, credited in the subsurface leak resulting in pool, surface leak resulting in pool, and subsurface leak remaining subsurface accident analyses, is to indicate the total quantity of liquid pumped to support material balance calculations during waste transfers.

The salt well flow totalizer is described in Appendix B. The discussion applies to waste transfers through overground waste transfer lines, single-walled direct-buried lines, and pipe-in-pipe encased lines involving DCRTs, DSTs (including AWF tanks), SSTs, and waste transfer-associated structures (process pits, diversion boxes, vault pits, cleanout boxes).

2.1.2.8 Transfer System Covers. The safety function of transfer system covers, credited in the surface leak resulting in pool accident analysis, is to limit release of aerosols generated by splatter inside the pit and limit shine and skyshine dose to the onsite receptor.

The discussion applies to waste transfer-associated structures (process pits, diversion boxes, vault pits, cleanout boxes). The diversion boxes, vault pits, and cleanout boxes are described in Appendix B. The process pits for DSTs, SSTs, and other storage tanks are described in Appendix B.

2.1.2.9 Waste Tank Level Monitors. The safety function of level monitors, credited in the tank bump accident analysis, is to indicate the waste level in the tank in support of implementing the tank temperature control. The waste tank level monitors are described in Appendix B.

The discussion applies to all DSTs and AWF tanks.

2.1.2.10 Waste Transfer Pipe Encasements. The safety function of waste transfer pipe encasements, credited in the subsurface leak remaining subsurface accident analysis, is to ensure that a leak in the primary waste transfer system piping is directed to a waste transfer-associated structure.

The waste transfer pipe encasements are described in Appendix B. The discussion applies to waste transfer system piping (concrete-encased lines and pipe-in-pipe encased lines).

2.1.2.11 Transfer Leak Detection Systems. The safety function of the transfer leak detection systems, credited in the subsurface leak remaining subsurface accident analysis, is to detect a potential waste accumulation in

the transfer-associated structures (e.g., process pits, diversion boxes, valve pits, cleanout boxes) and/or transfer piping encasement during a transfer and to alert the operator.

The transfer leak detection systems are described in Appendix B. The discussion applies to waste transfer piping (concrete-encased lines and pipe-in-pipe encased lines) and transfer associated structures (process pits, diversion boxes, vault pits, and cleanout boxes).

2.1.2.12 2727-W Sodium Storage Facility. The safety function of the 2727-W Sodium Storage Facility, credited in the sodium fire analysis, is to provide a physical barrier to the potential release from high winds and vehicle crashes. The 2727-W Sodium Storage Facility is described in Appendix B.

2.1.2.13 Service Water Flow Totalizers. The safety function of the service water flow totalizers, credited in surface leak resulting in pool accident analysis, is to monitor flow of service water. The service water flow totalizer is described in Appendix B.

2.2 REFERENCES

29 CFR 1910.119, 1993, "Process Safety Management of Highly Hazardous Chemicals," *Code of Federal Regulations*.

DOE-STD-1027-92, 1997, *Hazard Categorization and Accident Analysis Techniques for Compliance with DOE Order 5480.23, Nuclear Safety Analysis Reports*, Change 1, U.S. Department of Energy, Washington, D.C.

Dunford, G. L., 1996, *Tank Waste Remediation System Final Safety Analysis Report Selection of Safety Structures, Systems, and Components; and Technical Safety Requirements* (external letter 9654131 to M. L. Cowen, Westinghouse Savannah River Company, September 13), Westinghouse Hanford Company, Richland, Washington.

HNF-2296, 1998, *Justification for Continued Operation of Transfer Lines Having Structures With Less Volume Than the 241-A-A Valve Pit*, Rev. 0, Duke Engineering and Services Hanford, Richland, Washington.

WHC-CM-4-46, 1989, *Safety Analysis Manual*, Rev. 1, Westinghouse Hanford Company, Richland, Washington.

CHAPTER 3.0
RELEVANT OPERATIONAL HISTORY

This page intentionally left blank.

CHAPTER 3.0
RELEVANT OPERATIONAL HISTORY

CONTENTS

3.0 RELEVANT OPERATIONAL HISTORY 3-1
3.1 SIGNIFICANT ABNORMAL OCCURRENCES 3-1
3.2 CHANGES TO STRUCTURES, SYSTEMS, AND COMPONENTS IMPORTANT TO SAFETY 3-2
3.3 SAFETY-RELATED FINDINGS FROM OPERATIONAL READINESS REVIEWS AND INSPECTIONS/AUDITS 3-2
3.3.1 Tank Farm Operations and Facilities Assessments by U.S. Department of Energy 3-3
3.3.2 Independent Oversight Evaluations 3-5
3.3.3 Internal Assessments 3-9
3.4 SUMMARY OF OPEN UNREVIEWED SAFETY QUESTIONS AND SAFETY ISSUES 3-12
3.4.1 Open Unreviewed Safety Questions 3-12
3.4.2 Safety Issues 3-15
3.5 REFERENCES 3-16

LIST OF TABLES

3-1 Safety Issues for the Tank Waste Remediation System T3-1

3-2 System Deficiencies for the Tank Waste Remediation System T3-2

LIST OF TERMS

BIO	Basis for Interim Operation
CASS	Computer Automated Surveillance System
DACS	Data Acquisition and Control System
DOE	U.S. Department of Energy
RL	U.S. Department of Energy, Richland Operations Office
FDH	Fluor Daniel Hanford, Inc.
HazOp	Hazard and Operability Study
LANL	Los Alamos National Laboratory
ORPS	Occurrence Reporting and Processing System
PHA	preliminary hazard analysis
PHMC	Project Hanford Management Contract
RLID	U.S. Department of Energy, Richland Operations Office, Implementing Directive
TMACS	Tank Monitor and Control System
TWRS	Tank Waste Remediation System
USQ	Unreviewed Safety Question

3.0 RELEVANT OPERATIONAL HISTORY

This chapter discusses significant abnormal occurrences and associated compensatory measures published for the Tank Waste Remediation System (TWRS) operational history. Also discussed are the processes for resolving findings from operational readiness reviews, inspections, and audits; internal and external assessments; open Unreviewed Safety Questions (USQs) and their closure status; and open safety issues.

The hazard analysis activity summarized in Section 5.2, "Hazard Analysis" included a review of documented occurrence reports for TWRS (200 Area tank farms and affiliated facilities). The intent of the review was to identify a comprehensive set of hazards and potential accident causes to be used in the hazard analysis activity. This review involved comparing the nature of the occurrences with the potential causes or accidents identified by the hazard analysis and verifying that those occurrences are not material to the hazard analysis results. Review of the occurrences was also used to assist in determining qualitative frequencies for some of the hazardous conditions in the TWRS hazard and operability study (HazOp) and preliminary hazard analysis (PHA).

3.1 SIGNIFICANT ABNORMAL OCCURRENCES

The occurrence reporting and processing system, described in Section 4.16, "Occurrence Reporting," was established in 1990 to track unusual occurrence reports, off-normal events, and critiques. This system implements the reporting requirements of DOE 5000.3B, *Occurrence Reporting and Processing of Operations Information*[1].

One thousand-ninety occurrence reports and off-normal events from January 1972 to May 1998 were reviewed to determine the degree of significance and qualitative frequencies. These occurrence reports and off-normal events were compared with the hazardous conditions identified in TWRS HazOp and PHA. Two databases were created to track occurrences and off-normal events. For events that occurred before 1990, the database consists of unusual occurrence reports produced by previous Hanford Site Contractors, including the following: Atlantic Richfield Hanford Company (January 1972 through June 1977); Rockwell Hanford Company (June 1977 through June 1987); and Westinghouse Hanford Company (June 1987 through December 1989). Copies of tank farm-associated unusual event reports, critiques, and event fact sheets for the years 1986 through 1990 were reviewed and included in the database as appropriate. The Occurrence Reporting and Processing System (ORPS) database was obtained electronically for the years 1990 to May 1998. This database includes all unusual occurrence reports, off-normal events, and critiques generated by the Westinghouse Hanford Company and PHMC. Minor skin contaminations or reports of minor spread of contamination (specks or

[1]Although DOE Order 5000.3B has been rescinded, the contractor is obligated by the existing contract to meet the requirements stated in that order.

contamination spread to clothing) from tank farms or associated facilities were not included in the database developed to support the TWRS hazard analysis. This information is addressed separately by the Radiation Protection Program.

The criteria in DOE O 232.1, *Occurrence Reporting and Processing of Operations Information*, define what will be reported and the significance categories. The criteria for determining significance or severity of events include impacts on personnel safety, health protection, the environment, public exposure, nuclear safety limits, and emergency preparedness.

None of the tank farm occurrences met the criteria for significant consequences, serious consequences, or very serious consequences. The criteria used for this evaluation are discussed in WHC-SD-WM-CN-036, *Review of Tank Farm Occurrences According to Safety Significant Criteria*.

The hazard identification and evaluation process reviewed the occurrence reports to identify both hazardous conditions and frequency of occurrences. By reviewing existing safety documents and hazard analyses, operating history before 1972 was also considered in the hazards analysis process. The review is documented in Appendix D, "Hazard Analysis Results Report."

3.2 CHANGES TO STRUCTURES, SYSTEMS, AND COMPONENTS IMPORTANT TO SAFETY

TWRS equipment upgrades are initiated for different reasons, including changes in plant conditions, changes in operating or process requirements, identified hazards, self-evaluations, and event-related corrective actions.

Several changes and additions have been made to the safety structures, systems, and components at TWRS since the BIO was implemented. These changes have been incorporated in Appendix B, "Facility and Process Description." Project-specific facility descriptions are included in the BIO addenda.

3.3 SAFETY-RELATED FINDINGS FROM OPERATIONAL READINESS REVIEWS AND INSPECTIONS/AUDITS

The Corrective Action Management System implemented in WHC-CM-1-4[2], *Corrective Action Management Manual*, is used to ensure adverse conditions are identified, tracked, and resolved. The Corrective Action Management System uses a graded approach in performing evaluations and analyses, including root cause analyses, trend analysis, and lessons learned evaluations. The required tracking method for adverse condition status is the Hanford Action and Tracking System. The Hanford Action and Tracking System is a U.S. Department of Energy, Richland Operations Office (RL)-approved sitewide database used

[2]Refer to Appendix F, "Site-wide Controlled Manual Cross Reference Table," of the BIO for cross-walk between Site-wide controlled manuals (e.g., WHC-CM-X-XX) superseded by Fluor Daniel Hanford, Inc., Procedures (e.g., HNF-PRO-XXX).

within TWRS to enter, track, and report the status of conditions, deficiencies, and associated actions identified by internal and external assessments (WHC-SD-GN-CSUD-30013, *HATS Users Guide*).

The Hanford Action Tracking System is being phased out and will be replaced by the Deficiency Tracking System. The Deficiency Tracking System was initiated in November 1997. Project Hanford Procedure HNF-PRO-653, *Deficiency Tracking System*, implements requirements for processing and tracking deficiencies identified by or requiring action by personnel performing work under the Project Hanford Management Contract (PHMC).

3.3.1 Tank Farm Operations and Facilities Assessments by U.S. Department of Energy

3.3.1.1 East Tank Farm Operations Assessment. An operations assessment of the tank farms in the 200 East Area was conducted by RL in July 1995 (Sidpara 1995). The assessment identified six concerns. Only one (Concern 2) remains open as of May 1, 1998. The planned completion date for Concern 2 is September 30, 1998.

- Concern 2: "Shift routines at the Computer Automated Surveillance System (CASS) station are informal. CASS operators do not ensure that alarm status and facility configuration are communicated between the CASS station and the cognizant tank farm shift managers."

3.3.1.2 Tank Farm Operations and Facilities Assessment. An assessment of the tank farm operations and facilities was conducted by U.S. Department of Energy (DOE) and RL in April 1996 (McClusky 1996a). The assessment identified two findings. As of May 1, 1998, no open items remain for TWRS.

3.3.1.3 Special Assessment of 241-A-701 Air Compressor Upgrade Project. A special assessment of the 241-A-701 Air Compressor Upgrade Project at the 200 East Area Tank Farms was conducted by RL in August 1996 following a "near-miss" incident at the 241-A-701 Building (Kinzer 1996a). Several significant deficiencies were identified that led to the near miss incident, including improper acceptance and turnover of systems, improper configuration management control, incorrect labeling of equipment, improper lockout/tagout practices, and inadequate safety and quality oversight. The assessment identified six findings and two observations. A Corrective Action Plan was issued. As of May 1, 1998, no open items remain for TWRS.

3.3.1.4 Tank Farm Operations Secretarial Safety Initiatives Closure Assessment. An assessment was conducted by RL in August 1996 as a result of the special assessment performed on the 241-A-701 Air Compressor Upgrade Project at the 200 East Area Tank Farms (Kinzer 1996b). The results of the assessment concluded that four Secretarial Safety Initiative action items (1d,

5a, 5e, 5f) related to Tank Farm Operations were considered complete, and two action items (4a and 4b) were considered incomplete. As of May 1, 1998, Action Item 4a remains open.

- Safety Initiative 4: Infrastructure Upgrades

  Action Item 4a: Upgrade alarm panels in 7 tank farms by March 1995.

3.3.1.5 Tank Waste Remediation System Characterization Vapor Project Assessment. An assessment of the TWRS Characterization Vapor Project was conducted by RL in November 1996 (McClusky 1996b). The assessment described a number of deficiencies in the project deliverables. RL requested that the contractor provide a path forward and implementation dates by December 6, 1996, for the following issues:

- Current applicable TWRS permits (primarily the Rotary Mode Core Sampling permit) need to be reevaluated and renegotiated to include risk-cost-benefit considerations.
- The Vapor Project needs a clear technical basis. This includes a valid approved and signed Quality Assurance Project Plan, Data Quality Objectives(s), and Sampling and Analysis Plan(s).
- A plan is required which clearly outlines a reliable and comprehensive sampling and analysis process.

The path forward should include a detailed plan and schedule that indicate to RL and the Washington State Department of Ecology how the Vapor Project plans to proceed in a reasonably safe, environmentally sound, and cost-effective manner while striving for continuous improvement. Four corrective actions remain open and one remains on schedule (Umek 1997).

3.3.1.6 Management Assessment of Tank Waste Remediation System Basis for Interim Operation Implementation. A Management Assessment of TWRS BIO implementation was conducted by RL in September 1997 (Wagoner 1997). The objective was to verify that RL and the PHMC team had achieved the necessary state of readiness to implement the BIO. An Integrated Transition Plan was jointly prepared by the RL Management Assessment team and the PHMC team. The intent of the plan was to ensure an orderly disposition of the findings by the PHMC Readiness Assessment team, the RL Tier II and Tier III reviews, and the open items remaining from the Directed Changes issued through the BIO Safety Evaluation Report Amendment (TWRS-RT-SER-02, Amendment-1, MA Volume II, *Safety Evaluation Report Amendment to TWRS-RT-SER-02, Revision 1, Reconciliation and Consolidation of Tank Waste Remediation System Authorization Basis Controls*). A total of 131 transition items and conditions were compiled from the findings. The Integrated Transitional List of Items and Conditions is a living document under RL configuration management and will continue to be updated as the open items are closed.

3.3.1.7 RL TWRS Tank Operations Division Evaluations. The RL TWRS Tank Operations Division conducts periodic evaluations (assessments and surveillances) of TWRS facilities and the results are documented in TWRS Monthly Reports. The most recent evaluation was conducted by the RL TWRS Tank

Operations Division in April 1998 (Kinzer 1998a). The evaluation, which identified nine findings and 16 observations, consisted of two assessments of Single Shell Tanks (formerly known as 200 West Tank Farms facility), Double Shell Tanks (formerly known as 200 East Tank Farms facility), and Characterization Project. One of the assessments was a partial conduct of operations assessment, and consisted of eight surveillances. The other assessment covered Project W-030 (Aging Waste Facility ventilation upgrade project) turnover in the Double Shell Tanks. No significant deficiencies were identified during the partial conduct of operations assessment. The Lock and Tag Program for Single Shell Tanks was found to be well run and administered and in compliance with DOE orders, Occupational Safety and Health Administration standards, the sitewide program, and the contractor's program. The TWRS labeling upgrade program was found to have made significant progress under very difficult field conditions. Two significant issues were identified during the Project W-030 turnover assessment as follows:

- Project W-030 exceptions for system startup were overdue with no clear path for closeout, or the contractor closed out exceptions that were accepted in an inadequate condition.
- Procedures were not adequate to support initial system startup and shutdown.

As of May 1, 1998, all corrective actions remain open.

3.3.2 Independent Oversight Evaluations

3.3.2.1 Tiger Team Assessment. An independent oversight evaluation of environmental, safety, and health programs at the Hanford Site determined that improvement is needed in the following programs (DOE 1996 and Wagoner 1996a):

- Radiological Control
- Conduct of Operations/Procedural Rigor
- Requirements Management/Authorization Basis
- Monitoring/Assessments/Management Field Presence
- Corrective Action Program
- Subcontractor Safety
- Occupational Medicine/Medical Surveillance Programs.

The Fluor Daniel Hanford, Inc. (FDH) response to these deficiencies targets the broad categories of findings, linked to the systemic problems, from a management perspective rather than responding to detailed findings. The FDH Office of Environment, Safety, and Health (ES&H) was established to manage and integrate ES&H activities on a sitewide basis, with eight departments (each with specific defined roles). Quarterly reports indicate the status of the various deficiencies and overall progress towards their improvement. Several of the deficiencies described above are directly linked

to Performance Agreements. Significant programmatic improvements have been made, enabling closure of some Performance Agreements. Others remain open as of May 1, 1998.

3.3.2.2 Defense Nuclear Facilities Safety Board Independent Oversight. The Defense Nuclear Facilities Safety Board (Board) is an independent organization within the executive branch chartered with the responsibility of providing recommendations and advice to the President and the Secretary of Energy regarding public health and safety issues at DOE defense nuclear facilities, including TWRS. The most significant and challenging safety issues being tracked by the Board are reflected in the Board recommendations that remain open. Significant, ongoing Board-related activities at TWRS facilities are summarized below.

3.3.2.2.1 Integrated Safety Management System Implementation. During 1997 the Board focused on implementation of the Integrated Safety Management System (ISMS) at TWRS, which is a high-priority facility for implementation of ISMS programs. Implementation of Board Recommendation 95-2, "Integrated Safety Management," is central to DOE's nuclear safety management and the Board's approach to safety oversight. The objective of Recommendation 95-2 is to systematically integrate safety into management and work practices at all levels so that missions are accomplished while protecting the public, workers, and the environment. The status of ISMS implementation at TWRS will continue to be a primary focus by the Board.

3.3.2.2.2 Configuration Management. In 1996, the Board observed instances of configuration management problems at TWRS facilities and new construction projects (e.g., 241-A-701 Building "near-miss" event, Tank 241-AZ-102 ventilation system loss, flammable gas sample truck modification, Project W-320 delay) which raised concerns about the existing documentation and knowledge basis for the configuration of systems and equipment. Deficiencies observed include inadequate as-built drawings used by maintenance and operations personnel, inadequate labeling of equipment, and lack of update of maintenance and operating procedures. Following the 241-701-A near-miss event, tank farms reconstituted its labeling and drawing upgrade program into a project organization. The project has strong DOE and contractor management support, is focused, and involves the appropriate standards and workers. The Board continues to monitor configuration problems at TWRS closely.

3.3.2.2.3 Operational Readiness Reviews. Project W-030 (Aging Waste Facility [AWF] ventilation upgrade project) installed a new ventilation system for the AWF tanks. The new system is an improvement over the previous system, and provides an increased margin of safety in the tank farms. During the contractor and DOE readiness reviews, several significant pre-start findings adverse to the safe operation of the system were identified. Deficiencies were observed in the adherence to the appropriate requirements and intent of DOE 425.1[3], *Startup and Restart of Nuclear Facilities*, and DOE-STD-3006-95,

[3] DOE 425.1 is not part of the PHMC. Therefore, PHMC is obligated to comply with RLID 5480.31, *Startup and Restart of Facilities Operational Readiness Review and Readiness Assessments.*

Planning and Conduct of Operational Readiness Reviews. The Board will continue to monitor this area to ensure that the intent of the orders is met.

3.3.2.2.4 Systems Engineering. There has been progress within TWRS to implement Board Recommendation 92-4, "Systems Engineering." However, the systems engineering process is not institutionalized to the point where it is clearly directed, proceduralized, implemented, and repeatable. Additional efforts are in progress to demonstrate the institutionalization of systems engineering for TWRS to satisfy the objective of Recommendation 92-4.

3.3.2.2.5 Waste Characterization. The PHMC has developed a revised list of high-priority tanks to be sampled and analyzed as part of the Board Recommendation 93-5, "Characterization," Implementation Plan. The new list increases the priority for tanks of interest to the organic and flammable gas safety programs. Characterization is also being conducted in support of disposal system design, in accordance with Recommendation 93-5. Some designs may be driven by waste characterization results. The Board continues to monitor activities supporting implementation of Recommendation 93-5 to ensure potential impacts to the TWRS program are systematically investigated and resolved.

3.3.2.3 Review of the Federal Management of Tank Waste Remediation System. An independent review of the federal management of the TWRS program, commissioned by the RL Manager, was conducted by a team of nine DOE employees and contractors in January 1998 (Rudzinski 1998). The areas reviewed included (1) nuclear safety program management, (2) vadose zone contamination project management, and (3) general management and working environment of the TWRS program. Although the review was focused on management concerns, the team conducted some limited technical reviews to better understand the broader management issues. The team made four findings based on its review:

1. Current TWRS management processes for addressing safety and technical issues lack sufficient rigor to consistently detect, manage, and resolve problems before they become major issues for the program. This lack of rigor is evident throughout several aspects of TWRS nuclear safety management processes.

2. Processes for reviewing and resolving technical and safety comments are weak and have failed to address significant issues in several cases.

3. External credibility issues continue with the vadose zone program. Past management of the program (1980s through present) has contributed substantially to these problems.

4. Management problems identified in previous self-assessments persist.

The team recommended that RL and TWRS take the following actions:

1. Develop and implement corrective actions to address the team's findings within established deadlines.

2. Increase the rigor of safety authorization documentation and the USQ process.

3. Implement a more open and disciplined internal and external comment resolution process.

4. Accelerate current site efforts to develop a process to resolve differences of professional opinion and pilot test the process before implementing it broadly.

5. Fully integrate the vadose zone, groundwater, and Hanford Tank Initiative programs. Establish clear goals for the use of data among the programs and institute expert panel review of methodologies, modeling plans, and interpretations of results.

6. Improve communication of project and policy decisions to the staff and public. This will require the TWRS program to share information more openly and earlier than it has traditionally done.

7. Develop and implement a corrective action plan to address unresolved management problems from this report and previous studies.

Closure of the team recommendations (corrective actions) for RL and TWRS will be monitored by DOE management.

3.3.2.4 Review of Recent Unusual Occurrences and the Process for Verification of Implementation of the Basis for Interim Operation for Tank Waste Remediation System. An independent review of the BIO implementation process was conducted by DOE in February 1998, as the result of four incidents at TWRS that were classified as Unusual Occurrences (Rice 1998). The independent review concluded the following:

1. No systematic breakdown in the process for inclusion of revised Authorization Basis safety requirements existed.

2. The BIO implementation affidavit process, which identified needed changes to management and control documents, was not rigorously applied.

3. Additional verification activities, such as directed self-assessments and Quality Assurance checks of selected activities, are needed to ensure that all TSRs are implemented.

Corrective Actions in response to the report were issued (Rice 1998). The USQ process is highly proceduralized and institutionalized at TWRS. This USQ process, or a fundamentally equivalent process, will continue to be used to ensure the necessary and sufficient implementation of the Authorization Basis documents and requirements. Prior to validation activities involving the use of affidavits, the expectations will be re-emphasized. The recommendation to perform additional verification activities to ensure all TSRs are implemented was incorporated into the Contractor Readiness Assessment of the Replacement Cross-Site Transfer System (Project W-058), completed April 5, 1998, and will be included in all future activities.

3.3.3 Internal Assessments

3.3.3.1 Tank Farms Authorization Basis Assessment. The tank farms Authorization Basis was assessed and the results documented in an internal memo (Propson 1996). The assessment noted a serious lack of rigor in applying the USQ process and therefore issued an associated notice of noncompliance report under 10 CFR 830.120, "Quality Assurance Requirements." This report was subsequently transmitted to DOE-Headquarters (Newland 1996). In response to this report, a root cause analysis was performed (Truax 1996). From the root cause, nine associated findings were corrected. Implementing the corrective actions improved configuration management, procedures, and USQ programs. Three remaining open findings are as follows:

- Maintenance procedures and calibration data sheets that are indicated as safety related have no clear link to Authorization Basis requirements.
- The Compliance Implementation Plan is not a controlled document. The corrective action is to convert the Compliance Implementation Plan to a controlled document. This finding has no safety impact.
- The definition of "operability" as defined by DOE 5480.22, *Technical Safety Requirements*, and the Interim Operational Safety Requirements has not been fully implemented as required (intended) by the Interim Operational Safety Requirements. This finding has been corrected by issuing the BIO Technical Safety Requirements.

3.3.3.2 Westinghouse Hanford Company Quality Assurance Program and Implementation Plan - 10 CFR 830.120. Another assessment documented in WHC-SP-1131, *Westinghouse Hanford Company Quality Assurance Program and Implementation Plan, Implementation of Title 10 Code of Federal Regulations Part 830.120*, identified five action items. One of these action items is completed; those remaining open are as follows (WHC-SP-1131):

- **Generate As-Builts for Construction Projects**—This action was completed by December 1996. There is no compensatory action because no new large-scale construction projects are imminent.
- **Revise "As-Builts" to Denote Upgrades and Maintenance**—This action will be completed by September 2000. Compensatory actions are as follows:
  - The contractor will continue to use the existing Field Verification program (i.e., walkdown of systems to verify field and project-initiated work). The Field Verification program provides accurate drawings of TWRS facilities.
  - A new drawing program has been initiated that effectively establishes the "as-built" status for some systems. As an additional compensatory action, the labeling program provides labels for components and input for the master equipment list, and develops system drawings.

- **Track the Condition and Age of Materials and Equipment**—This action is completed. Implementation of loop calibration is currently focused on system loops associated with the Authorization Basis. The implementation of loop calibration on the remaining loop systems will be based on their importance to safety, quality, environment, and Conduct of Operations.

- **Specify Design Basis for Existing Facilities**—This action will be completed by September 2005. Compensatory actions are as follows:

  - Additional field verification steps are taken during the planning stages of maintenance and operations activities to ensure worker and public safety.

  - Facilities of hazard category 3 and above must pass the contractor Readiness Review process per DOE 5480.31 before they are operated.

3.3.3.3 Westinghouse Hanford Company Facility Evaluation Board Assessment - August 1996. The Westinghouse Hanford Company Facility Evaluation Board conducted its first performance-based assessment of the 200 West Tank Farms facility (now known as Single Shell Tanks) in August 1996 (Wicks 1996). The Facility Evaluation Board conducted the assessment in the areas of Facility Organization and Administration; Operations; Radiological Controls; Engineering; Maintenance; Environment, Safety and Health, & Quality Assurance; and Training and Support. The Facility Evaluation Board evaluated the overall facility performance as "Below Expectations." A grade of "Below Expectations" means standards of performance were minimal and need to be raised. The minimum requirements are generally met in most areas. Performance and programmatic improvements were needed in many areas. Several significant strengths were observed at West Tank Farms, which included a desire to make reengineering work, the willingness to discover and apply new processes, and the drive toward continuous improvement.

The West Tank Farms, however, did have three significant areas of weakness. As of May 1, 1998, all deficiencies are closed. The core issues included the following:

- Radiological Controls

- Correction of Known Deficiencies

- Handling of Hazardous Materials and Dangerous Waste.

3.3.3.4 Fluor Daniel Hanford, Inc. Facility Evaluation Board Assessment - December 1997. The FDH Facility Evaluation Board conducted its first performance-based assessment of the 200 East Tank Farms facility (now known as Double Shell Tanks) and Characterization Project in April 1997 (Grier 1997). The Facility Evaluation Board conducted the assessment in the areas of Facility Organization and Administration; Operations; Radiological Controls; Engineering; Maintenance; Occupational Safety and Health; Training; Emergency Preparedness; Environmental Compliance; and Quality Assurance. The Facility Evaluation Board evaluated the overall performance as "Level 3 (Meets Minimum Requirements)." Level 3 means standards of performance are acceptable. The

minimum requirements are met. Management expectations are generally not satisfied. Performance and programmatic improvements are needed in some areas. Several noteworthy practices were identified during the assessment. Included are the TWRS Facility Excellence Program, East Tank Farms Contamination Water-Borne Capture Coating Procedure, TWRS Vision Training Development Software Program, and Characterization Project Drill Simulation Techniques.

Three core issues were identified by the Facility Evaluation Board during the assessment. The issues reflect deficiencies observed in more than one assessment area. These core issues include the following:

- Procedural Compliance
- Radiological Control Practices
- Corrective Action Management.

A Corrective Action Plan for identified deficiencies was accepted by FDH TWRS Project. As of May 1, 1998, all radiological control deficiencies are closed. Closure of other deficiencies remains in progress.

3.3.3.5 FDH Facility Evaluation Board Assessment - March 1998. The Fluor Daniel Hanford, Inc. Facility Evaluation Board conducted its second performance-based assessment of the Single Shell Tanks organization in November 1997 (Grier 1998a). The Facility Evaluation Board conducted the assessment in the areas of Facility Organization and Administration; Operations; Radiological Controls; Engineering; Maintenance; Occupational Safety and Health; Training; Emergency Preparedness; Environmental Protection and Waste Management; and Quality Assurance. The Facility Evaluation Board evaluated the overall performance as "Level 3 (Meets Minimum Requirements)." Level 3 means standards of performance are acceptable. The minimum requirements are met. Management expectations are generally not satisfied. Performance and programmatic improvements are needed in some areas. The trend of performance is improving from the first assessment conducted in August 1996. Several noteworthy practices and positive observations were identified by the Facility Evaluation Board during the assessment. Two core issues were identified as follows:

- Requirements Management
- Corrective Action Management.

A Corrective Action Plan for identified deficiencies was accepted by FDH TWRS Project. As of May 1, 1998, closure of identified deficiencies remains in progress.

3.4 SUMMARY OF OPEN UNREVIEWED SAFETY QUESTIONS AND SAFETY ISSUES

Open USQs and safety issues are discussed in this section.

3.4.1 Open Unreviewed Safety Questions

Three open USQs exist within TWRS and are discussed in the following sections. These open USQs are tracked and closed through the USQ process (HNF-IP-0842, *TWRS Administration*). The compensatory measures and controls implemented for interim operation are discussed in Chapter 5.0, "Safety Analysis."

3.4.1.1 Flammable Gas and Slurry Growth Unreviewed Safety Question. Three mechanisms (radiolysis of water, thermal production, and corrosion) work simultaneously to produce flammable gases (principally hydrogen, ammonia, and methane) in the site's stored, high-level nuclear waste. Radiolysis of water generates hydrogen and ammonia if the waste contains nitrate or nitrite ions. Thermal production (from chemical reactions) involving radiolytic degradation products of some of the original organic chemicals stored in the tanks generates methane, nitrous oxide, hydrogen, and ammonia. Corrosion of a waste tank's steel lining also generates hydrogen.

Originally, "slurry growth," the phenomena of gases being trapped within the slurry and beneath the crust of the waste, was thought to cause the accumulation of flammable gas. Reviews of vapor space flammability in Tank 241-SY-101 identified that the gas under the waste crust is potentially flammable because nitrous oxide and hydrogen can create flammable mixtures, (which is considered an "Unreviewed Safety Question" [Daugherty 1990]).

Because Tank 241-SY-101 could potentially accumulate flammable gas in its dome space, it was placed on a flammable gas "watch list." A flammable gas mixture in a tank, along with an ignition source, could lead to a deflagration or burning. In turn, this could cause a release of radioactive waste to the environment. In May 1990, the flammable gas USQ was declared (Lawrence 1990).

Since 1990, considerable information has been obtained from tank samples, monitoring data, laboratory experiments, and theoretical modeling and analysis. This information has increased the understanding of flammable gas and slurry growth phenomena. In addition, a mixer pump was installed in Tank 241-SY-101 in July 1993 to gradually release gas, thereby avoiding concentration buildup to flammable levels.

The original USQ on Tank 241-SY-101 was recently closed (Kinzer 1996c). The administrative controls (Wagoner 1996b) on the mixer pump required for closure of this USQ are described in Chapter 5.0.

Another USQ evaluation, USQ Tracking No. TF-96-0433, "Expansion of Flammable Gas and Slurry Growth," identified the following TWRS facilities as potentially having flammable gases: double-contained receiver tanks, double-

shell tanks (including AWF tanks), and single-shell tanks; TWRS-managed inactive miscellaneous underground storage tanks; catch tanks; the 204-AR Waste Unloading Facility; and the 244-AR Vault.

Clarification of the Flammable Gas and Slurry Growth USQ (USQ Tracking No. TF-96-0433) is presented in Appendix E, "Flammable Gas/Slurry Growth Unreviewed Safety Question: Justification for Continued Operation for the Tank Farms at the Hanford Site." The allowed activities and required controls of this justification for continued operation are described in Appendix E.

3.4.1.2 Condensed-Phase Organic Nitrate Reactions Unreviewed Safety Questions. Previous evaluations of the organic salt-nitrate hazard reviewed the bulk heating scenario that caused a disaster in the commonwealth of independent states, formally the Union of Soviet Socialist Republics. This scenario involved a waste tank with a high-radionuclide heat load that was allowed to dry out; the waste self-heated to ignition temperature and exploded.

Comparison of organic waste tanks at the Hanford Site with this scenario concluded that the scenario is not credible because (1) average temperatures in organic tank waste are kept well below the bulk ignition temperature of 230 °C (446 °F), and (2) the waste has ample moisture to prevent ignition from such point sources as lightning, fuel spill or fire, or welding sparks.

However, new information from WHC-SD-WM-SARR-033, *Preliminary Safety Criteria for Organic Watch List Tanks at the Hanford Site*, indicates that it may be possible to ignite dry surface organic waste with similar point sources of heat (e.g., lightning, fuel spill or fire, welding spark) if interstitial water is more than 0.3 m (1 ft) subsurface. Surrogate tests show that point sources can ignite reactive, dry organic waste with an organic carbon of >4.5 wt% and a moisture of <20 wt%.

In May 1996, the contractor declared the condensed-phase organic nitrate reactions USQ (USQ Tracking No. TF-95-0096, "Condensed-Phase Organic Nitrate Reactions"); RL accepted the USQ (Wagoner 1996c). From the USQ evaluation, the following conclusions were made:

- All double-shell tanks are judged to currently have sufficient moisture in the waste to make them conditionally safe from condensed-phase organic nitrate reactions, regardless of the total organic carbon level.
- Double-contained receiver tanks hold only liquid waste for short periods and are thus safe from condensed-phase organic nitrate reactions.
- Two tanks (241-C-201 and 241-C-202) are currently identified as Organic Tanks.
- Two tanks (241-AX-102 and 241-C-204) are identified as Potential-Organic Tanks.

- Miscellaneous underground storage tanks (also known as miscellaneous inactive storage facilities) and the single-shell tanks are still being evaluated.

The allowed activities and required controls for the TWRS facilities are described in Chapter 5.0. The contingency actions for the safe operation of other tanks and inactive miscellaneous underground storage tanks are also described in Chapter 5.0.

3.4.1.3 Waste Surface Level Increase in Tank 241-SY-101. Tank 241-SY-101 has exhibited periodic waste level fluctuations after the initial waste was added to the tank. The fluctuations are associated with the generation, retention, and spontaneous release of large quantities of flammable gas. An increase in the amount of retained gas causes the level to increase, while a release of gas causes the level to drop. The surface level in Tank 241-SY-101 has been used as an indirect measure of retained gas inventory, and therefore as an indicator of the flammable gas hazard associated with the tank. A mixer pump was installed in the tank in 1993 to mitigate the pattern of gas retention and spontaneous release. Before the installation of the mixer pump in 241-SY-101, episodic gas releases occurred at intervals of 3 to 6 months. The releases occurred when the waste level was above 1046.5 cm (412 in.). The waste level was 1031.2 cm (406 in.) when the mixer pump was installed. The waste level decreased to less than 1016 cm (400 in.) after a few months of operation, where it remained through 1996 (Hatch 1998).

Between January and October 1997, the waste surface level increased to approximately 1016 cm (400 in.) as measured by the level indicating device in riser 1C. The rate of level increase is approximately 0.025 to 0.05 cm/day (0.01 to 0.02 in./day) compared with a rate of 0.2 to 0.25 cm/day (0.08 to 0.10 in./day) before the mixer pump was installed. However, the level increase was not expected because of the regular pump operations. The location of the layers of waste in the tank has not changed. Data from the two thermocouple trees installed in the tank indicate that the liquid waste remains below the crust (with a thickness of approximately 127 cm [50 in.]) and above the settled solids layer (with a thickness of approximately 30.5 cm [12 in.]). Data on the tank ventilation (both in the headspace and in the annulus) indicate that its performance has not been degraded over the course of the year. No degradation in the pump performance has been observed either, as indicated by pump motor current, pump rotating speed, volute and nozzle discharge pressure, and oil temperature rate of increase. The waste temperature readings indicate that waste flow is penetrating to the radius of the thermocouple trees, when the jets are directed at the thermocouple trees. These data are consistent with previous behavior. Gas releases following pump operation are also within established norms (Hatch 1998).

The Test Review Group has the option to consider aggressive pump operations when the waste level in Tank 241-SY-101 reaches 1014.7 cm (399.5 in.) (WHC-SD-WM-PLN-081, *Mixer Pump Long Term Operations Plan for Tank 241-SY-101*). As a result, the Test Review Group directed that the number of pump runs be increased from three to four per week, starting October 27, 1997. The increased number of pump runs did not slow the increase in surface level. In fact, it appeared that the level continued to increase with increased pump operation. On December 9, 1997, the Test Review Group directed that the pump operation return to three runs per week (Hatch 1998).

The TWRS Plant Review Committee declared that the unexplained level increase in Tank 241-SY-101 constituted a "discovery" on December 27, 1997. As a result, occurrence report RL-PHMC-TANKFARM-1997-0106, *Potential Inadequacy in the Authorization Basis for Tank 241-SY-101*, was issued. Also, USQ Screening/Determination TF-97-0975, "Waste Surface Level Change in Tank 241-SY-101," was declared by the contractor to document the findings. Single Shell Tanks Standing Order 98-15, "Operations in Tank 241-SY-101," was generated to impose new controls to ensure the safety of the waste in the tank.

The USQ TF-97-0975 and Standing Order 98-15 were transmitted to RL on February 20, 1998 (Hatch 1998). RL concurred with the contractor on February 26, 1998, that the unexplained waste level change in Tank 241-SY-101 represents an USQ (Kinzer 1998b). RL issued direction on the proposed new controls as contained in Single Shell Tanks Standing Order 98-15, on March 5, 1998 (Wagoner 1998). At this time, the following restrictions on mixer pump operations are in effect:

1. Prior to each pump operation, the Shift Manager shall verify that all Tank 241-SY-101 riser 17B and 17C multiple instrument tree operational thermocouples are indicating less than 125 °F, as observed on either Tank Monitor and Control System (TMACS) or Data Acquisition and Control System (DACS) outputs. If any of the 17B or 17C multiple instrument tree operational thermocouples exceed 125 °F, the Shift Manager shall obtain written guidance from the Test Review Group prior to performing pump operations.

2. Mixer pump operation shall continue in accordance with the Los Alamos National Laboratory (LANL) Safety Assessment (LA-UR-92-3196, *A Safety Assessment for Proposed Pump Mixing Operations to Mitigate Episodic Gas Releases in Tank 241-SY-101: Hanford Site, Richland, Washington*) and the long term operating plan. However, changes to pump operations required at 1021 cm (402 in.) as measured by the 1C ENRAF no longer apply.

3. The Test Review Group shall review tank data at least monthly and issue the Shift Manager authorization to continue pump operations.

3.4.2 Safety Issues

On November 5, 1990, the U.S. Congress enacted Public Law 101-510 *National Defense Authorization Act for Fiscal Year 1991*. Section 3137 of the law, "Safety Measures for Waste Tanks at Hanford Nuclear Reservation," addresses safety issues concerning the handling of high-level nuclear waste in storage tanks at the Hanford Site. In response to this law, the Secretary of Energy reported to the U.S. Congress in June 1991 (DOE 1991) regarding (1) actions being taken to promote safety in the "watch list" tanks; (2) the timetable for resolving waste tank safety issues; and (3) procedures for handling the radioactive waste in Hanford Site waste tanks. A more detailed report (DOE 1992) followed and provided safety issue descriptions, technical bases, alternatives, and an action plan for each safety issue identified in WHC-EP-0422, *A Plan to Implement Remediation of Waste Tank Safety Issues at the Hanford Site*.

Further review by the DOE High-Level Waste Tanks Task Force, in 1992, identified additional safety issues and a new category called "system deficiencies." The High-Level Waste Tanks Task Force report (DOE 1992) identified a total of 30 safety issues and system deficiencies to be addressed at the Hanford Site, Savannah River, Idaho Falls National Engineering Laboratory, and West Valley facilities. Of the 30 issues and deficiencies identified, 28 issues and deficiencies applied to the Hanford Site.

The safety issues were prioritized in three categories, according to the potential for an accident to occur. Priority 1 comprises four issues that include most of the necessary conditions that could lead to exposing an onsite worker to an uncontrolled release of radioactive waste. Priority 2 comprises eight issues that include some of the necessary conditions that could lead to an uncontrolled release of radioactive waste under extreme assumptions. Priority 3 comprises seven issues that include the necessary conditions that could lead to future release of radioactive waste. This "future" release is assumed to occur during the 5 to 30 years of intermediate storage of high-level waste before waste removal, treatment, and vitrification. System deficiencies are additional areas affecting tank farm operations that need improvement. Where practical, TWRS goals include resolving the safety issues by leaving the waste in the tank until it is removed for final disposal. This approach minimizes cost and radiation exposure to personnel. If necessary, resolving safety issues by removing the waste from a tank for treatment or storage elsewhere is recommended. When complete, the TWRS program will resolve the safety issues for the Hanford Site waste tanks. Safety issues for TWRS are summarized by priority level in Table 3-1. Table 3-2 identifies system deficiencies.

For more information on the safety issues and system deficiencies, refer to WHC-EP-0600, *Status Report on Resolution of Waste Tank Safety Issues at the Hanford Site*. Also provided in WHC-EP-0600 are the status of the resolution of each safety issue and system deficiency, summaries of the completed actions and actions being taken to promote tank safety, and timetables for resolving safety issues and system deficiencies.

3.5 REFERENCES

10 CFR 830.120, "Quality Assurance Requirements," *Code of Federal Regulations*.

Daugherty, H. F., 1990, *Initial Unusual Occurrence Report WHC-UO-90-013-TF-02* (external letter 9052557 to R. E. Gerton, U.S. Department of Energy, Richland Operations Office, April 5), Westinghouse Hanford Company, Richland, Washington.

DOE, 1991, *U.S. Department of Energy Report U.S. Congress on Waste Tank Safety Issues at the Hanford Site*, U.S. Department of Energy, Washington, D.C.

DOE, 1992, *U.S. Department of Energy High-Level Waste Storage Tank Safety Issues Report, DOE High-Level Waste Tank Task Force Working Group*, Rev. 4, November 30, U.S. Department of Energy, Washington, D.C.

DOE, 1996, *Independent Oversight Evaluation of Environment, Safety, and Health Programs at the Hanford Site, Office of Oversight Environment, Safety and Health*, U.S. Department of Energy, Washington, D.C.

DOE O 232.1, 1995, *Occurrence Reporting and Processing of Operations Information*, Change 1, U.S. Department of Energy, Washington, D.C.

DOE O 425.1, 1995, *Startup and Restart of Nuclear Facilities*, Change 1, U.S. Department of Energy, Washington, D.C.

DOE 5480.22, 1996, *Technical Safety Requirements*, Change 2, U.S. Department of Energy, Washington, D.C.

DOE 5480.31, 1993, *Startup and Restart of Nuclear Facilities*, U.S. Department of Energy, Washington, D.C.

DOE-STD-3006-95, 1995, *Planning and Conduct of Operational Readiness Reviews*, U.S. Department of Energy, Washington, D.C.

Grier, G. W., 1997, *Facility Evaluation Board Final Report - East Tank Farms and Characterization Project* (letter FDH-9761665 to L. E. Hall, Lockheed Martin Hanford Corporation, December 18), Fluor Daniel Hanford, Inc., Richland, Washington.

Grier, G. W., 1998a, *Facility Evaluation Board Final Report - Single-Shell Tank Farms Assessment* (letter FDH-9852115 to M. P. Delozier, Lockheed Martin Hanford Corporation, March 12), Fluor Daniel Hanford, Inc., Richland, Washington.

Hatch, H. J., 1998, *Contract Number DE-AC06-96RL13200; Unreviewed Safety Question Related to Waste Surface Level Changes in Tank 241-SY-101* (external letter FDH-9851287 R1 to J. D. Wagoner, U.S. Department of Energy, Richland Operations Office, February 20), Fluor Daniel Hanford, Inc., Richland, Washington.

HNF-IP-0842, 1997, *TWRS Administration*, Rev. 1, Westinghouse Hanford Company, Fluor Daniel Hanford, Inc., Richland, Washington.

HNF-PRO-653, 1997, *Deficiency Tracking System*, Rev. 0, Fluor Daniel Hanford, Inc., Richland, Washington.

Kinzer J., 1996a, *U.S. Department of Energy, Richland Operations Office (RL) Special Assessment Report of Westinghouse Hanford Company (WHC), 241-A-701 Compressor Upgrade Project* (letter 96-WSD-177 to A. L. Trego, Westinghouse Hanford Company, August 9), U.S. Department of Energy, Richland Operations Office, Richland, Washington.

Kinzer, J., 1996b, *The U.S. Department of Energy, Richland Operations Office (RL) Special Assessment (SA) Report of the Westinghouse Hanford Company (WHC), Tank Farms Operations Secretarial Safety Initiative Closure* (letter 96-WSD-219 to A. L. Trego, Westinghouse Hanford Company, September 24), U.S. Department of Energy, Richland Operations Office, Richland, Washington.

Kinzer, J., 1996c, *Closure of Hanford Tank 241-SY-101 Flammable Gas Unreviewed Safety Question (USQ)* (memo WSD:CAG 96-WSD-065 to M. A. Hunemuller, June 21), U.S. Department of Energy, Richland Operations Office, Richland, Washington.

Kinzer, J., 1998a, *Contract Number DE-AC06-96RL13200 - U.S. Department of Energy, Richland Operations Office (RL) Tank Waste Remediation System (TWRS) Evaluation Report of Tank Farm Operations During April 1998* (letter 98-TOD-005 to H. J. Hatch, Fluor Daniel Hanford, Inc., May 15), U.S. Department of Energy, Richland Operations Office, Richland, Washington.

Kinzer, J., 1998b, *Contract Number DE-AC06-96RL13200 - Declaration of an Unreviewed Safety Question (USQ) Related to Waste Surface Level Changes in Tank 241-SY-101* (letter 98-WSD-040 to H. J. Hatch, Fluor Daniel Hanford, Inc., February 26), U.S. Department of Energy, Richland Operations Office, Richland, Washington.

LA-UR-92-3196, 1995, *A Safety Assessment for Proposed Pump Mixing Operations to Mitigate Episodic Gas Releases in Tank 241-SY-101: Hanford Site, Richland, Washington*, Rev. 14, Los Alamos National Laboratory, Los Alamos, New Mexico.

Lawrence, M. J., 1990, *Unreviewed Safety Question - Waste Storage Tanks* (letter SED:VCW to L. P. Duffy, U.S. Department of Energy-Headquarters, May 14), U.S. Department of Energy, Richland Operations Office, Richland, Washington.

McClusky, J. K., 1996a, *U.S. Department of Energy, Richland Operations Office (RL) Evaluation Report of Westinghouse Hanford Company (WHC) Tank Farm Operations During April 1996* (letter 96-WSD-075 to President, Westinghouse Hanford Company, May 25), U.S. Department of Energy, Richland Operations Office, Richland, Washington.

McClusky, J. K., 1996b, *Contract Number DE-AC06-96RL13200; Transmittal of the Tank Waste Remediation System (TWRS) Vapor Project Assessment and Request For Corrective Action* (letter 96-WSD-316 to H. J. Hatch, Fluor Daniel Hanford, Inc., November 25), U.S. Department of Energy, Richland Operations Office, Richland, Washington.

Newland, D. J., 1996, *Noncompliance Notification Report for Waste Tank Remediation System Transition Projects (Tank Farms) - Title 10, Code of Federal Regulations, Part 830.120, Quality Assurance Requirements* (external letter NTS-RL-WHC-Tank Farms-1996-001 9651024 to R. K. Christopher, U.S. Department of Energy-Headquarters, March 7), Westinghouse Hanford Company, Richland, Washington.

Propson, J. G., 1996, *Authorization Basis Assessment* (internal memo 74E41-96-001 to J. J. Klos, February 9), Westinghouse Hanford Company, Richland, Washington.

Public Law 101-510, 1990, *National Defense Authorization Act for Fiscal Year 1991*, Section 3137, "Safety Measures for Waste Tanks at Hanford Nuclear Reservation."

Rice, C. J., 1998, *Proposed Actions in Response to Hummer Report* (memo 79000-98-011 to D. I. Allen, Lockheed Martin Hanford Company, April 6), Lockheed Martin Hanford Company, Richland, Washington.

RL-PHMC-TANKFARM-1997-0106, 1997, *Potential Inadequacy in the Authorization Basis for Tank 241-SY-101*, Rev. 0, Fluor Daniel Hanford, Inc., Richland, Washington.

RL-WHC-TANKFARM-1994-0035, 1994, *Review of Records Results in Discovery of Potential Violation of 241-AP Tank Farm Dome Loading Requirements*, Rev. 4, Westinghouse Hanford Company, Richland, Washington.

RLID-5480.31, 1994, *Startup and Restart of Facilities Operational Readiness Review and Readiness Assessment*, U.S. Department of Energy, Richland Operations Office, Richland, Washington.

Rudzinski, S., 1998, *Review of the Federal Management of the Tank Waste Remediation System (TWRS) Project at the Department of Energy's Hanford, WA Site*, U.S. Department of Energy, Washington, D.C.

Sidpara, A. B., 1995, *East Tank Farm Operations Assessment Report, PAD-AS-95-047* (letter PAD-95-57762 to President, Westinghouse Hanford Company, September 7), U.S. Department of Energy, Richland Operations Office, Richland, Washington.

Single Shell Tanks Standing Order 98-15, Rev. 0, February 12, 1998, "Operations in Tank 241-SY-101," Lockheed Martin Hanford Company, Richland, Washington.

Tayloe, R. W., 1996, *Final Report - Review of Hanford High-Level Radioactive Waste Tank Nuclear Criticality Safety Documentation for DOE Richland Operations Office* (external letter to Distribution, September 17), Battelle, Columbus, Ohio.

TF-96-0433 (USQ Tracking No.), 1996, "Expansion of Flammable Gas and Slurry Growth" (July 1996), Westinghouse Hanford Company, Richland, Washington.

TF-95-0096 (USQ Tracking No.), Rev. 0, "Condensed-Phase Organic Nitrate Reactions" (May 1996), Westinghouse Hanford Company, Richland, Washington.

TF-97-0975 (USQ Tracking No.), Rev. 2, "Waste Surface Level Change in Tank 241-SY-101" (February 1998), Fluor Daniel Hanford, Inc., Richland, Washington.

Truax, J. E., 1996, *Corrective Actions for Noncompliance Notification Report* (internal letter 77000-96-033 to D. M. Lucoff, April 11), Westinghouse Hanford Company, Richland, Washington.

TWRS-RT-SER-02, Amendment-1, MA Volume II, 1997, *Safety Evaluation Report Amendment to TWRS-RT-SER-02, Revision 1, Reconciliation and Consolidation of Tank Waste Remediation System Authorization Basis Controls*, U.S. Department of Energy, Richland Operations Office, Richland, Washington.

Umek, A. M., 1993, *Contract Number DE-AC-06-96RL13200: Response to Transmittal of the Tank Waste Remediation System Vapor Project Assessment and Request for Corrective Action* (external letter to J. K. McClusky, March 19), Fluor Daniel Hanford, Inc., Richland, Washington.

Wagoner J. D., 1996a, *Crosswalk of Assistant Secretary For Environment, Safety and Health (EH) Safety Management Evaluation (SME) Team Issues and 1990 Tiger Team/1992 Progress Assessment Team Findings*, U.S. Department of Energy, Richland Operations Office, Richland, Washington.

Wagoner, J. D., 1996b, *RL Approval of Engineering Change Notice (ECN) 169389 to Interim Operational Safety Requirements* (memo 96-WSD-031 to A. L. Trego, Westinghouse Hanford Company, May 10), U.S. Department of Energy, Richland Operations Office, Richland, Washington.

Wagoner, J. D., 1996c, *Recommendation for Declaring an Unreviewed Safety Question (USQ) Regarding Condensed-Phase Organic Nitrate Reactions* (letter 96-WSD-073 to A. L. Trego, Westinghouse Hanford Company, May 24), U.S. Department of Energy, Richland Operations Office, Richland, Washington.

Wagoner, J. D., 1996d, *Contract Number DE-AC06-96RL13200; Approval to Revise the Interim Safety Basis to Remove Ferrocyanide Tanks from the Watch List* (letter 96-WSD-333 to H. J. Hatch, Fluor Daniel Hanford, Inc., December 30), U.S. Department of Energy, Richland Operations Office, Richland, Washington.

Wagoner, J. D., 1997, *Contract Number DE-AC06-96RL13200 - Approval of Tank Waste Remediation System (TWRS) Basis for Interim Operation (BIO) Readiness and Revised Authorization Basis (AB)* (letter 97-SCD-024 to H. J. Hatch, Fluor Daniel Hanford, Inc., September 12), U.S. Department of Energy, Richland Operations Office, Richland, Washington.

Wagoner, J. D., 1998, *Contract Number DE-AC06-96RL13200 - Further Direction Regarding Tank 241-SY-101 Unreviewed Safety Question (USQ)* (letter 98-WSD-043 to H. J. Hatch, Fluor Daniel Hanford, Inc., March 5), U.S. Department of Energy, Richland Operations Office, Richland, Washington.

WHC-CM-1-4, 1996, *Corrective Action Management Manual*, Rev. 1, Westinghouse Hanford Company, Richland, Washington.

WHC-EP-0422, 1991, *A Plan to Implement Remediation of Waste Tank Safety Issues at the Hanford Site*, Rev. 1, Westinghouse Hanford Company, Richland, Washington.

WHC-EP-0600, 1995, *Status Report on Resolution of Waste Tank Safety Issues at the Hanford Site*, Rev. 1, Westinghouse Hanford Company, Richland, Washington.

WHC-SD-GN-CSUD-30013, *HATS Users Guide*, Westinghouse Hanford Company, Richland, Washington.

WHC-SD-WM-CN-036, 1996, *Review of Tank Farm Occurrences According to Safety-Significant Criteria*, Rev. 0, Westinghouse Hanford Company, Richland, Washington.

WHC-SD-WM-PLN-081, 1994, *Mixer Pump Long Term Operations Plan for Tank 241-SY-101*, Rev. 3, Westinghouse Hanford Company, Richland, Washington.

WHC-SD-WM-SARR-033, 1996, *Preliminary Safety Criteria for Organic Watch List Tanks at the Hanford Site*, Rev. 1, Westinghouse Hanford Company, Richland, Washington.

WHC-SD-WM-SARR-038, 1996, *Assessment of the Potential for Ferrocyanide Propagating Reaction Accidents*, Rev. 1, Westinghouse Hanford Company, Richland, Washington.

WHC-SP-1131, 1996, *Westinghouse Hanford Company Quality Assurance Program and Implementation Plan, Implementation of Title 10 Code of Federal Regulations Part 830.120*, Rev. 1, Westinghouse Hanford Company, Richland, Washington.

Wicks, J. H., 1996, *Facility Evaluation Board Final Report For West Tank Farms Transition Project* (letter 9654351 to A. B. Sidpara, U.S. Department of Energy, Richland Operations Office, September 25), Westinghouse Hanford Company, Richland, Washington.

This page intentionally left blank.

Table 3-1. Safety Issues for the Tank Waste Remediation System.

Safety issue description	Priority
High flammable gas concentrations	1
Potentially explosive mixtures of ferrocyanides[1]	1
Potential for runaway organic-nitrate reactions	1
Water additions needed to cool single-shell tank	1
Potential for nuclear criticality in high-level waste tanks[2]	2
Inadequate single-shell tank leak detection	2
Storage of high-level waste in tanks that have leaked	2
Inability of waste tanks and ancillary equipment to withstand a design basis earthquake	2
Single-shell tank emergency pumping capability inadequate	2
Tank vapor release	2
Inadequate response time to a leaking double-shell tank	2
Storage of high-level waste in tanks with no secondary containment	2
Insufficient tank storage capacity to handle waste resulting from resolution of existing safety issues	3
Cracked tank farm ventilation header	3
Insufficient hydroxide concentration in tanks	3
Inadequate sealing of single-shell tanks to prevent intrusions that could leak contamination out of tank	3
Inadequacies in waste transfer line leak detection	3
Excessive unfiltered airflow passages into tanks	3
Uncharacterized corrosion of high-level waste tanks	3

NOTES:

[1]This issue is resolved based on WHC-SD-WM-SARR-038, Assessment of the Potential for Ferrocyanide Propagating Reaction Accidents and Contract Number DE-AC06-96RL13200; Approval to Revise the Interim Safety Basis to Remove Ferrocyanide Tanks from the Watch List (Wagoner 1996d).

[2]U.S. Department of Energy, Richland Operations Office review team has recently (September 1996) recommended closing the criticality safety issue (Tayloe 1996).

Table 3-2. System Deficiencies for the Tank Waste Remediation System.

Insufficient tank contents characterization
Inadequate safety documentation
Deficient maintenance and upgrade of facilities
Deficient instrumentation upgrades in single-shell and double-shell tanks
Extended tank safety operating life
Conduct of operations deficient
Lack of plant-essential drawings
Questionable transfer-line-concrete-encasement integrity
Leak detection in double-shell tanks

CHAPTER 4.0
SAFETY MANAGEMENT

This page intentionally left blank.

CHAPTER 4.0
SAFETY MANAGEMENT

CONTENTS

4.0 SAFETY MANAGEMENT 4-1
4.1 ORGANIZATIONAL STRUCTURE AND MANAGEMENT RESPONSIBILITIES 4-3
4.2 STANDARDS/REQUIREMENTS IDENTIFICATION DOCUMENT 4-4
4.3 CRITICALITY PROTECTION 4-4
4.4 RADIOLOGICAL PROTECTION 4-5
4.5 HAZARDOUS MATERIAL PROTECTION 4-5
4.6 RADIOACTIVE AND HAZARDOUS MATERIAL WASTE MANAGEMENT 4-6
4.7 TESTING, SURVEILLANCE, AND MAINTENANCE 4-7
4.8 CONDUCT OF OPERATIONS 4-8
4.9 WORK CONTROL 4-8
4.10 FIRE PROTECTION PROGRAM 4-8
4.11 TRAINING AND PROCEDURES 4-9
4.12 QUALITY ASSURANCE 4-10
4.13 EMERGENCY PREPAREDNESS 4-11
4.14 DECONTAMINATION AND DECOMMISSIONING 4-12
4.15 CONFIGURATION MANAGEMENT 4-12
4.16 OCCURRENCE REPORTING 4-13
4.17 UNREVIEWED SAFETY QUESTIONS 4-13
4.18 HUMAN FACTORS 4-14
4.19 REFERENCES 4-14

LIST OF TERMS

ALARA	As Low as Reasonably Achievable
BIO	Basis for Interim Operation
D&D	decontamination and decommissioning
DNFSB	Defense Nuclear Facilities Safety Board
DOE	U.S. Department of Energy
ES&H	Environment, Safety, and Health
FDH	Fluor Daniel Hanford, Inc.
ISMS	integrated safety management system
SSC	structure, system, and component
TSR	Technical Safety Requirements
TWRS	Tank Waste Remediation System
USQ	Unreviewed Safety Question

4.0 SAFETY MANAGEMENT

The objective of the Integrated Safety Management System (ISMS) is to facilitate *SAFE WORK*. The Tank Waste Remediation System (TWRS) organization is committed to performing work safely and efficiently and in a manner that ensures the protection of the public, the workers, and the environment. The overall management of safety functions and activities is an integral part of the TWRS Mission. This is accomplished through the effective integration of safety management into all facets of work planning and execution.

The ISMS establishes a single, defined environment, safety and health (ES&H) management system that integrates requirements into work planning and execution and identifies a set of requirements that reflects U.S. Department of Energy's (DOE) commitment to a "standards based" safety program and the safety concepts reflected by these requirements.

Improvements in the TWRS Authorization Basis and the implementation of an ISMS within TWRS are a significant step toward the implementation of Defense Nuclear Facilities Safety Board (DNFSB) Recommendation 95-2, concerning integrated safety management.

Key safety management programs included in this chapter provide the administrative framework for the safe operation of TWRS facilities.

TWRS is committed to safety management programs that ensure the following:

- Safe storage of radioactive and hazardous materials
- Protection of facility workers from exposure to radioactive and hazardous materials and industrial hazards
- Protection of the public and environment from releases of radioactive and hazardous materials.

The safety management programs comprise safety-related activities that range from radiation and hazardous material protection to disciplined conduct of operations. Developing and maintaining the Authorization Basis documents and associated safety basis documents are essential to safety management. TWRS has implemented improvements in the Authorization Basis process to improve safety that include both organizational changes (Section 4.1 "Organizational Structure and Management Responsibilities") and configuration control changes (Section 4.15 "Configuration Management").

Another important part of the TWRS safety management is provided by HNF-SD-WM-HSP-002, *Tank Farms Health and Safety Plan*, which addresses routine operations performed at the tank farms, establishes procedures, and provides general guidelines to minimize health and safety risks to the facility workers and other onsite workers. In addition to the Technical Safety Requirements, HNF-SD-WM-HSP-002 includes measures to protect some of the safety controls identified during the safety analysis process.

For the set of representative accidents analyzed in Chapter 5.0, "Safety Analyses," Defense-in-Depth systems and components; Safety-Significant structures, systems, and components (SSCs); and Safety-Class SSCs are identified. Their safety functions and other appropriate comments are captured in the tables which follow each analysis, and the basic criteria and programmatic requirements for each are summarized below. The discipline imposed by these criteria and requirements goes beyond merely supporting the assumptions identified in the analysis; it is an integral part of the Defense-in-Depth philosophy.

Defense-in-Depth systems and components are protected by the following disciplines.

- Configuration Control/Configuration Management. Engineering drawings and other design media are controlled per approved procedures. Facility configuration underlying the documented safety basis is not changed without implementing and completing the Unreviewed Safety Question process described in Section 4.17, "Unreviewed Safety Questions", and the process for changing plant design provides a controlled and auditable interface with that Unreviewed Safety Question process. Design changes affecting the human-machine interface receive special attention and a graded approach for approval of all engineering documents is followed. In addition, purchasing processes for spare parts and other materials needed for work activities are controlled by approved procedures.

- Work Control. Facility work is not performed without proper authorization. Section 4.9, "Work Control," describes approved work control processes which are followed for all modifications to the physical plant and all preventive and corrective maintenance to the plant equipment.

- Conduct of Operations. To achieve and sustain safe operations, a comprehensive program of management oversight and assessment covering operations, surveillance and maintenance practices, feedback of operational experience, and overall effectiveness of management controls has been established and is being maintained per Section 4.8, "Conduct of Operations." The implementing requirements and programs for TWRS are described in HNF-IP-0842, *TWRS Administration*.

- Quality Assurance. Appropriate quality assurance processes and procedures per Section 4.12, "Quality Assurance," are followed. Appropriate levels of quality control involvement in equipment maintenance, plant modifications, and other quality-affecting work activities are exercised.

- Training and Procedures. Per Sections 4.11, "Training and Procedures," and 4.18, "Human Factors," the preparation, approval, validation, and use of written procedures to guide operations, testing, surveillance, and maintenance activities are required. A competent operating staff is well trained in the use of all operations, testing, surveillance, and maintenance procedures.

Safety-Significant and Safety-Class SSCs are protected by the following disciplines. In addition to the following, all basic criteria and programmatic requirements for Defense-in-Depth systems and components apply:

- A change to a safety SSC is only possible after careful consideration of the reasons which support why the SSC was originally identified as a safety SSC.
- A Safety Equipment List has been created and maintained to clearly identify each component part of a safety SSC which performs, or directly supports the performance of, the identified safety function. The Safety Equipment List is contained in HNF-SD-WM-SEL-040, *TWRS Facility Safety Equipment List*.
- Enhanced inspection, testing, and maintenance programs are implemented to provide a high degree of assurance that all Safety-Significant and Safety-Class SSCs perform their safety functions when required.

The safety management programs, applicable requirements, and implementing documents that support TWRS operations are briefly described in the rest of this chapter. These programs are not independent of each other. Often one program is implemented through the application of the other programs (e.g., conduct of operations is implemented through work control, procedures, and training). Thus, the implementation of all these programs ensures the protection of the public, workers, and the environment.

NOTE: The following sections refer to the site-wide controlled manuals, however, most of the manuals (e.g., WHC-CM-X-XX) have been superseded by the Fluor Daniel Hanford, Inc. (FDH), procedures (e.g., HNF-PRO-XXX). A cross-reference table has been provided in Appendix F, "Site Wide Controlled Manual Cross Reference Table," to guide the reader in locating the current FDH procedure(s). As part of implementation of the BIO controls, the references to the controlled manuals will be updated as appropriate to reflect the current FDH procedures.

4.1 ORGANIZATIONAL STRUCTURE AND MANAGEMENT RESPONSIBILITIES

The contractor's organizational structure provides for the clear identification of roles and responsibilities, especially as they relate to safe operation of the facilities. The organizational structure provides for the following:

- Identification and control of the requirements related to each safety management program (Section 4.2 "Standards/Requirements Identification Document")
- Identification of the responsibility for implementing those requirements through contractor documents such as policies and procedures

- Identification of the responsibility for implementing contractor policies and procedures.

For Authorization Basis development and control, the above responsibilities are implemented through HNF-IP-0842, Volume 4. The following sections of this chapter provide roles and responsibilities for the safety management programs.

4.2 STANDARDS/REQUIREMENTS IDENTIFICATION DOCUMENT

The U.S. Department of Energy (DOE) approved, WHC-SD-MP-SRID-001, *High Level Waste Storage Tank Farms/242-A Evaporator Standards/Requirements Identification Document*, is a concise compilation of facility-specific federal, state, and local laws; regulations; permit conditions; industry consensus codes; standards; and good business practices. The applicable environmental safety and health and safeguards and security functional areas are also identified.

WHC-SD-MP-SRID-001 is currently being implemented. Implementation is verified through reviews (assessments, audits, and surveillance) conducted by internal oversight organizations.

4.3 CRITICALITY PROTECTION

The purpose of criticality protection is to ensure that sufficient controls are in place to reduce the likelihood of inadvertent nuclear criticality excursions.

The TWRS Criticality Protection Program, which addresses the following general aspects, follows DOE 5480.24[1], *Nuclear Criticality Safety*; industry standards; company safety policy; and accepted safety practices:

- Nuclear criticality safety administration
- Nuclear criticality safety control principles
- Criticality safety training
- Nuclear criticality safety control documents
- Criticality safety plans and procedures
- Criticality emergencies and limit violations.

[1]Although DOE Orders 5000.3B, 5480.7A, 5480.10, and 5480.24 have been rescinded the contractor is obligated by the existing contract to meet the requirements stated in those orders.

Supplementing the general aspects are the following specific elements of the criticality safety program:

- Parameter controls are established for waste transfer into the tank farms to meet double contingency requirements for the prevention of a criticality accident
- Parameter controls are documented and independently verified.

Criticality protection at TWRS facilities is implemented through WHC-CM-4-29[2], *Nuclear Criticality Safety Manual*, and Technical Safety Requirement Administrative Control (AC) 5.7, "Nuclear Criticality Safety."

4.4 RADIOLOGICAL PROTECTION

The TWRS radiological protection program for TWRS facilities provides for the protection of the worker during normal operations and implements specific safety controls identified in Chapter 5.0. The worker protection program comprises the following elements:

- As Low as Reasonably Achievable (ALARA) goals
- Radiation worker training
- Radiation exposure control
- Radiological monitoring
- General employee radiation training.

Radiological protection activities at the Hanford Site implement the requirements of 10 CFR 835, "Occupational Radiation Protection," as directed by the HSRCM-1, *Hanford Site Radiological Control Manual*.

The Tank Waste Operations organization administers the Radiological Protection Program for TWRS. This project also establishes radiological protection standards and procedures; provides independent review and evaluation of the program; conducts radiological and dosimetry support; develops and implements training; and coordinates the ALARA Program.

4.5 HAZARDOUS MATERIAL PROTECTION

The Hanford Site Industrial Hygiene Program is designed to protect all workers from hazardous exposures to physical, chemical, and biological agents. The program provides the basis for an effective industrial hygiene program

---

[2]Refer to Appendix F, "Site-wide Controlled Manual Cross Reference Table," of the BIO for cross-walk between Site-wide controlled manuals (e.g., WHC-CM-X-XX) superseded by Fluor Daniel Hanford, Inc. (FDH), procedures (e.g., HNF-PRO-XXX).

that preserves worker health and well being following DOE 5480.4, *Environmental Protection, Safety, and Health Protection Standards*, and DOE 5480.10[1], *Contractor Industrial Hygiene Program*. These DOE orders implement 29 CFR 1910, "Occupational Safety and Health Standards," and 29 CFR 1926, "Safety and Health Regulations for Construction." Current procedures are documented in WHC-CM-1-11[2], *Industrial Hygiene Manual*, and WHC-CM-4-40[2], *Industrial Hygiene Manual*. The Industrial Hygiene Program is implemented by Tank Waste Operations.

Contractor procedures provide for the identification and evaluation of existing and potential health hazards; the implementation of control measures; the periodic monitoring to ensure the maintenance of satisfactory conditions; and the conduct of employee training.

4.6 RADIOACTIVE AND HAZARDOUS MATERIAL WASTE MANAGEMENT

TWRS stores and processes wastes in a manner that ensures that releases of radioactive and hazardous materials to the environment are maintained within regulatory limits and exposure of workers and the public to radioactive and hazardous materials is minimized.

Criteria for confinement, safe handling, and disposal of solid, liquid, and gaseous waste are provided in WHC-CM-7-5[2], *Environmental Compliance*, which identifies the requirements of the DOE 5400 series orders, with emphasis on DOE 5400.5, *Radiation Protection of the Public and the Environment*.

Contractor procedures, which meet the requirements of DOE 5820.2A, *Radioactive Waste Management*, establish requirements for TWRS facility waste acceptance programs. These waste acceptance requirements ensure that all waste has been properly identified and characterized before being shipped. Each hazardous and radioactive waste generator that delivers waste to TWRS facilities is required to comply with TWRS waste acceptance program requirements.

TWRS radioactive and hazardous waste management is implemented through the following:

- *Dangerous Waste Portion of the Resource Conservation and Recovery Act Permit for the Treatment, Storage, and Disposal of Dangerous Waste* (Ecology 1995a)
- *Hanford Federal Facility Agreement and Consent Order* (Ecology et al. 1996)
- WHC-CM-7-5[2], *Environmental Compliance* (1996)
- WHC-EP-0063, *Hanford Site Solid Waste Acceptance Criteria* (1993)
- WHC-EP-0479, *Facility Effluent Monitoring Plan for the Tank Farm Facility* (1995)

- HNF-EP-0496, *Project Hanford Management Contract Pollution Prevention Program Implementation Plan* (1996)
- WHC-EP-0846, *Waste Specification System* (1995)
- WHC-SD-WM-EV-090, *Tank Farms Transition Projects Waste Minimization/Pollution Prevention Plan* (1996)

TWRS environmental protection relies heavily on compliance with federal and state requirements and working with the regulatory community and stakeholders.

The TWRS organizational infrastructure includes a multi-level, independent oversight program. This independent oversight program is designed to verify federal, state, and local environmental laws and regulations and DOE requirements are addressed adequately in the TWRS management policies and that TWRS operations are conducted in compliance with those policies. Assessment activities are performed in accordance with written guidance and criteria to verify that applicable elements of the environmental protection program have been developed and implemented effectively.

4.7 TESTING, SURVEILLANCE, AND MAINTENANCE

Initial testing, in-service surveillance, and maintenance programs at TWRS ensure the integrity and operability of safety structures, systems, and components (SSCs).

The initial testing program encompasses all safety SSCs, and requires the development of testing procedures and the review, evaluation, and approval of test results. Testing programs within the initial testing program are specified as quality assurance requirements in WHC-CM-4-2[2], *Quality Assurance Manual*.

In-service surveillance and inspections at TWRS are conducted on the basis of DOE 4330.4B, *Maintenance Management Program*. Program requirements include periodic inspections to ensure that proper conditions, cleanliness, and housekeeping are maintained to support safe and reliable facility operations.

Surveillance requirements have been established for Safety-Class and Safety-Significant SSCs. These requirements provide assurance that the necessary quality of SSCs is maintained and that the Limiting Conditions for Operation are being met.

The TWRS maintenance program meets the requirements of DOE 4330.4B. Compliance with this order is documented in WHC-SP-0850, *Maintenance Implementation Plan for Waste Tank Maintenance and Production Management*. Major maintenance programs include the following:

- Preventive maintenance
- Spare parts control

- Maintenance history
- Corrective maintenance
- Maintenance training
- Measuring and test equipment.

Requirements for the maintenance program reflect the relative importance of facility SSCs in protecting the public, workers, and the environment.

4.8 CONDUCT OF OPERATIONS

Conduct of operations requirements at TWRS are based on DOE 5480.19, *Conduct of Operations Requirements for DOE Facilities*. Contractor procedures provide detailed requirements for procedures, communications, training, shift operations, and facility operations. The implementing requirements and programs for TWRS are described in HNF-IP-0842.

4.9 WORK CONTROL

All work activities at TWRS are controlled through a formal work control program and design configuration management program. The work control program ensures the following:

- The work scope is fully defined
- The hazards associated with the work are identified and evaluated
- Sufficient controls, based on the hazards, are identified and implemented to ensure that the work can be performed safely
- The work is executed safely and the completed work is verified.

Management of work activities within TWRS is defined in WHC-CM-1-8[2], *Work Management*.

4.10 FIRE PROTECTION PROGRAM

The contractor's fire protection program, established to meet the requirements of DOE 5480.7A[1], *Fire Protection*, ensures the following conditions are met.

- No threats to the public health or welfare will result from a fire.
- No undue fire hazards exist for site personnel.

The program uses fire detection and extinguishing systems and equipment, administrative controls, procedures, and trained personnel to meet the requirements of DOE 5480.7A[1]. Three principles are followed to prevent and mitigate the consequences of potential fires:

1. Control of ignition sources and combustible and flammable materials
2. Prompt detection and suppression of fires through a combination of installed fire protection systems and a professional firefighting organization
3. Employee training.

The TWRS fire protection program is implemented through WHC-CM-4-41[2], *Fire Protection Program Manual*.

4.11 TRAINING AND PROCEDURES

The training program for TWRS described in HNF-IP-0842 addresses the requirements of DOE 5480.18B, *Nuclear Facility Training Accreditation Program*, and DOE 5480.20A, *Personnel Selection, Qualification, and Training, Requirements at DOE Nuclear Facilities*.

The purpose of the training program is to provide training to help workers safely and effectively perform their work assignments. The training program ensures the following:

- Programs are established to identify training needs and requirements, to define qualification criteria, and to document employee participation in required training.
- Workers acquire the knowledge and skills required to perform assigned duties.
- Training conducted adheres to cost-effective business practices; meets job and organizational needs; and fulfills requirements of applicable DOE directives, regulations, and contractor policies and procedures.
- Training activities are integrated to ensure that site resources are used effectively to contain costs; to promote excellence in job performance; and to support uniformity of training analysis, design, development, implementation, and evaluation.
- Training activities are managed by division training managers who ensure compliance with the training program policy.

The contractor uses approved procedures, appropriate to the tasks to be performed, to ensure maintenance and operation of all facilities are accomplished in a disciplined manner. DOE and the contractor are focusing on the following efforts to make procedures more usable and effective:

- Increasing the technical correctness of procedures

- Providing appropriate support capabilities to ensure timely processing and distribution of procedures
- Increasing user compliance
- Promoting procedures as key management controls that ensure the safe and efficient operation of TWRS facilities.

The procedures define requirements for management approval of all activities within TWRS to maintain the safety envelope.

4.12 QUALITY ASSURANCE

Requirements for systematically implementing a quality assurance program, specified in 10 CFR 830.120, "Quality Assurance" and DOE 5700.6C, *Quality Assurance*, are established in HNF-MP-599, *Project Hanford Quality Assurance Program Description* and WHC-CM-4-2[2].

Activities affecting quality, safety, or reliability of TWRS operations, products, and services are performed following documented and approved procedures appropriate for the task. The TWRS procedure manuals are used to ensure that quality assurance requirements are systematically implemented. Procedures are provided in the contractor's quality assurance program for the following functions and processes:

- Design control
- Procurement control
- Control of instructions, procedures, and drawings
- Document control
- Control of purchased items and services
- Identification and control of items
- Control of processes
- Inspection and test control
- Control of measuring and test equipment
- Packaging, handling, shipping, and storage control
- Inspection, test, and operating status control
- Control of nonconforming items and activities
- Software control

- Control of stop-work and corrective actions
- Control of personnel training and certification
- Control of records
- Control of audits.

4.13 EMERGENCY PREPAREDNESS

The TWRS Emergency Preparedness Program establishes planning, procedures, and training programs to effectively prepare for, respond to, and manage emergencies and incidents affecting the health and safety of the worker and the public. The emergency management program implements the DOE 5500 series orders.

The TWRS Emergency Plan includes descriptions of the following:

- Response organizations, authorities, responsibilities, and relationship with the technical support center and emergency operations facility established for emergency response
- Actions to be taken with state and local agencies for responses to events that involve the potential for a release of radiological materials
- Emergency classification system and associated emergency action levels
- Notification processes and the communications systems
- Methods, systems, and equipment available for assessing the actual or potential emergency conditions
- Protective actions required to provide maximum protection to workers and the public
- Medical resources available to assist in the event of an emergency
- Technical assessment and mitigation of facility emergency conditions
- Requirements for providing information to the public, offsite authorities, and local media
- Emergency facilities and equipment available to support emergency operations
- Staffing and training needs of the emergency response organization
- Drills and exercise required to develop, maintain, and test the response capabilities of the emergency response organization.

TWRS emergency preparedness program is implemented through the following procedures.

- WHC-IP-0263-TF, *Tank Farms Building Emergency Plan* (1994)
- WHC-IP-0971, *Tank Waste Remediation System (TWRS) Emergency Preparedness Program Plan* (1997).

4.14 DECONTAMINATION AND DECOMMISSIONING

A formal decontamination and decommissioning (D&D) plan has not been prepared for the TWRS. The TWRS Final Safety Analysis Report, however, will contain limited discussions of D&D considerations. Detailed plans will be prepared as required to support final D&D of TWRS.

Cleanup methods will be selected for TWRS facilities on the basis of the disposition method deemed appropriate for the waste in those facilities. Facilities that are identified as treatment, storage, and disposal units will be closed according to the requirements of the *Regulations for Implementing Procedural Provisions of the National Environmental Policy Act* (Ecology 1995b).

The design of the original TWRS facilities contained no specific criteria to facilitate D&D. The TWRS facilities were, however, engineered with features to contain leaked waste products and to minimize the spread of contamination (e.g., nonporous tank walls and coatings in pits and buildings that can be decontaminated). Representative design features that benefit D&D are as follows:

- Double-shell tank
- Encased piping
- Valve pits
- High-efficiency particulate air filters.

Operational considerations necessary for compliance with HSRCM-1 and WHC-CM-7-5[2] help maintain the spread of contamination to ALARA. Representative operational features that benefit D&D are as follows:

- Leakage monitoring
- Interim stabilization.

4.15 CONFIGURATION MANAGEMENT

WHC-SD-WM-CM-013, *TWRS Configuration Management Program Plan*, defines the requirements and responsibilities for the execution of the TWRS configuration management program.

The TWRS configuration management program provides for the identification and control of physical, functional, and operational requirements of configuration-controlled SSCs, including TSR design features, and Defense-in-Depth SSCs. TWRS has developed a hierarchy of contractor-generated documents that identifies all requirements for configuration-controlled SSCs as technical baseline documents. A subset of the technical baseline documents that establish the requirements for safety SSCs, including Defense-in-Depth SSCs, are identified as safety basis documents. Within the safety basis documents are those documents that require DOE approval. This subset is identified as the Authorization Basis documents. Authorization Basis documents also include DOE-prepared documents.

The responsibilities and requirements for the control of all TWRS technical baseline documents are provided in HNF-IP-0842. These requirements include maintaining a listing of all technical baseline documents, a listing of all safety basis documents, and a listing of all Authorization Basis documents. Additionally, the requirements and responsibilities for revision control of all technical baseline documents (including Defense-in-Depth items) are identified in HNF-IP-0842. The revision control process ensures all proposed changes are properly reviewed and approved before authorization. Impacts to the Authorization Basis are identified through the Unreviewed Safety Question (USQ) process (Section 4.17).

4.16 OCCURRENCE REPORTING

The occurrence reporting and processing system is designed to bring to the attention of management and DOE officials events, conditions, or concerns that have or may have safety, health, quality assurance, security, operational, or environmental implications. WHC-CM-1-5[2], *Standard Operating Practices*, establishes (1) a consistent process on a sitewide basis for the identification of events, conditions, and concerns; (2) the protocol for reporting incidents; and (3) the guidelines for the appropriate follow-up activities (including corrective action determination and implementation). TWRS occurrence reporting program is based on the requirements of DOE 5000.3B[1] (superseded by DOE O 232.1), *Occurrence Reporting and Processing of Operations Information*.

4.17 UNREVIEWED SAFETY QUESTIONS

The concept of USQs, as presented in DOE 5480.21, *Unreviewed Safety Questions*, allows contractors to make physical and procedural changes and to conduct tests and experiments without prior approval from DOE. These changes must neither explicitly nor implicitly affect the Authorization Basis of the facility.

When Authorization Basis documents are revised, they are subjected to the USQ process, unless such changes are directed or otherwise approved by the U.S. Department of Energy, Richland Operations Office. The TWRS plant review committee is responsible for resolving issues concerning the identification of USQs and other safety matters relating to TWRS. The plant review committee is also the interpretive authority of the Technical Safety Requirements.

The TWRS USQ process is implemented through HNF-IP-0842.

4.18 HUMAN FACTORS

The application of human factors is graded on project risk, complexity, and level of involvement of the operator at the facility. Although, TWRS does not have a formal human factors program, human factors are addressed at various organizational levels within TWRS. The Design Authority and Nuclear Safety and Licensing organizations are responsible for ensuring human factors are included as an explicit consideration in the modification of TWRS facilities, systems, or equipment that may affect safety.

Operation of the TWRS facility is the responsibility of the Tank Waste Operations organization. Several organizations provide support and expertise on topics such as industrial safety, industrial hygiene, hazardous material and radiological control, maintenance, procedures, and training. These groups assist the line manager in addressing human factors issues in the following ways:

- **Safety and Quality Support**—Ensure that the operational environment (e.g., noise, lighting, industrial hazards) in which tasks must be performed permit the safe and reliable performance of the expected tasks.
- **Procedures Organization**—Ensure that human performance (i.e., ability to perform task as described in procedure) is addressed, during the preparation and writing of the procedure.
- **Training Organization**—Ensure consideration of human factors in training programs by developing needs analysis, job analysis, or task analysis (e.g., lessons learned) to determine operational requirements and needed skills based operational tasks and current skill levels.

Additionally, the training and procedures organizations work together to identify training requirements for new operations.

4.19 REFERENCES

10 CFR 830.120, "Quality Assurance," *Code of Federal Regulations*.

10 CFR 835, "Occupational Radiation Protection," *Code of Federal Regulations*.

29 CFR 1910, "Occupational Safety and Health Standards," *Code of Federal Regulations*.

29 CFR 1926, "Safety and Health Regulations for Construction," *Code of Federal Regulations*.

DOE 4330.4B, 1994, *Maintenance Management Program*, Change 0, U.S. Department of Energy, Washington, D.C.

DNFSB, 1995, *Recommendation 95-2 to the Secretary of Energy*, Defense Nuclear Facilities Safety Board, Washington, D.C.

DOE 5000.3B, 1993, *Occurrence Reporting and Processing of Operations Information*, Change 1, U.S. Department of Energy, Washington, D.C. Note: Cancelled by DOE O 232.1, 1995, *Occurrence Reporting and Processing Operations Information*, U.S. Department of Energy, Washington, D.C. Compliance with DOE 5000.3B is required until the Contracting Officer directs compliance with DOE O 232.1 or provides other direction to terminate compliance with DOE 5000.3B.

DOE 5400.5, 1993, *Radiation Protection of the Public and the Environment*, Change 2, U.S. Department of Energy, Washington, D.C. Note: Chapter II, Paragraph 1a(3)(a) cancelled by DOE O 231.1, 1995, *Environment, Safety, and Health Reporting*, Change 2, U.S. Department of Energy, Washington, D.C. Compliance with DOE 5400.5 required until directed by Contracting Officer to terminate compliance.

DOE 5480.4, 1993, *Environmental Protection, Safety, and Health Protection Standards*, Change 4, U.S. Department of Energy, Washington, D.C. Note: Attachment 2 Paragraphs 2c, 2d(2)-(3), 2e(1)-8(8) cancelled by DOE O 440.1, 1996, *Worker Protection Management for DOE Federal and Contractor Employees*, Change 1, U.S. Department of Energy, Washington, D.C.; Attachment 3 Paragraphs 2c, 2d(2)-(3), 2e(1)-(7) cancelled by DOE O 440.1. Compliance with entire order is required until the Contracting Office directs compliance with DOE O 440.1 or provides other direction to terminate compliance with DOE 5480.4.

DOE 5480.7A, 1993, *Fire Protection*, Change 0, U.S. Department of Energy, Washington, D.C. Note: Cancelled by DOE N 251.4, DOE O 440.1, and DOE O 420.1, 1996, *Facility Safety*, Change 2, U.S. Department of Energy, Washington, D.C. Compliance with DOE 5480.7A is required until the Contracting Officer directs compliance with DOE O 440.1 or DOE O 420.1 or provides other direction to terminate compliance with DOE 5480.7A.

DOE 5480.10, 1985, *Contractor Industrial Hygiene Program*, Change 0, U.S. Department of Energy, Washington, D.C. Note: Cancelled by DOE N 251.4, 1995, *Cancellation of Directives*, U.S. Department of Energy, Washington, D.C. and DOE O 440.1. Compliance with 5480.10 is required until the Contracting Officer directs compliance with DOE O 440.1 or provides other direction to terminate compliance with DOE 5480.10.

DOE 5480.18B, 1994, *Nuclear Facility Training Accreditation Program*, Change 0, U.S. Department of Energy, Washington, D.C.

DOE 5480.19, 1992, *Conduct of Operations Requirements for DOE Facilities*, Change 1, U.S. Department of Energy, Washington, D.C.

DOE 5480.20A, 1994, *Personnel Selection, Qualification, and Training Requirements at DOE Nuclear Facilities*, Change 0, U.S. Department of Energy, Washington, D.C.

DOE 5480.21, 1991, *Unreviewed Safety Questions*, Change 0, U.S. Department of Energy, Washington, D.C.

DOE 5480.24, 1992, *Nuclear Criticality Safety*, Change 0, U.S. Department of Energy, Washington, D.C. Note: Cancelled by DOE O 420.1, 1996, *Facility Safety*, Change 2, U.S. Department of Energy, Washington, D.C. Compliance with DOE 5480.24 is required until the Contracting Officer directs compliance with DOE O 420.1 or provides other direction to terminate compliance with DOE 5480.24.

DOE 5700.6C, 1991, *Quality Assurance*, Change 1, U.S. Department of Energy, Washington, D.C.

DOE 5820.2A, 1988, *Radioactive Waste Management*, Change 0, U.S. Department of Energy, Washington, D.C.

Ecology, 1995a, *Dangerous Waste Portion of the Resource Conservation and Recovery Act Permit for the Treatment, Storage, and Disposal of Dangerous Waste*, Permit WA 7890008967, Rev. 2, Washington State Department of Ecology, Olympia, Washington.

Ecology, 1995b, *Regulations for Implementing Procedural Provisions of the National Environmental Policy Act*, Permit WA7890009067, Rev. 2, Washington State Department of Ecology, Olympia, Washington.

Ecology, EPA, and DOE, 1996, *Hanford Federal Facility Agreement and Consent Order*, as amended, Washington State Department of Ecology, U.S. Environmental Protection Agency, and U.S. Department of Energy, Olympia, Washington.

HNF-EP-0496, 1996, *Project Hanford Management Contract Pollution Prevention Program Implementation Plan*, Rev. 2, Rust Federal Services of Hanford, Inc., Richland, Washington.

HNF-IP-0842, 1997, *TWRS Administration*, Rev. 0, Fluor Daniel Hanford, Inc., Richland, Washington.

HNF-MP-599, 1997, *Project Hanford Quality Assurance Program Description*, Rev. 1, Fluor Daniel Hanford, Inc., Richland, Washington.

HNF-SD-WM-HSP-002, 1998, *Tank Farms Health and Safety Plan*, Rev. 3, Lockheed Martin Hanford Corporation, Richland, Washington.

HNF-SD-WM-SEL-040, 1997, *TWRS Facility Safety Equipment List*, Rev. 0, Lockheed Martin Hanford Company, Richland, Washington.

HSRCM-1, 1994, *Hanford Site Radiological Control Manual*, Rev. 2, Westinghouse Hanford Company, Richland, Washington.

WHC-CM-1-5, 1996, *Standard Operating Practices*, Rev. 19, Westinghouse Hanford Company, Richland, Washington.

WHC-CM-1-8, 1996, *Work Management*, Westinghouse Hanford Company, Richland, Washington.

WHC-CM-1-11, 1996, *Industrial Hygiene Manual*, Rev. 3, Westinghouse Hanford Company, Richland, Washington.

WHC-CM-4-2, 1996, *Quality Assurance Manual*, Rev. 89, Westinghouse Hanford Company, Richland, Washington.

WHC-CM-4-29, 1996, *Nuclear Criticality Safety Manual*, Rev. 9, Westinghouse Hanford Company, Richland, Washington.

WHC-CM-4-40, 1996, *Industrial Hygiene Manual*, Rev. 12, Westinghouse Hanford Company, Richland, Washington.

WHC-CM-4-41, 1996, *Fire Protection Program Manual*, Rev. 21, Westinghouse Hanford Company, Richland, Washington.

WHC-CM-7-5, 1996, *Environmental Compliance*, Rev. 86, Fluor Daniel Hanford, Inc., Richland, Washington.

WHC-EP-0063, 1993, *Hanford Site Solid Waste Acceptance Criteria*, Rev. 4, Westinghouse Hanford Company, Richland, Washington.

WHC-EP-0479, 1995, *Facility Effluent Monitoring Plan for the Tank Farm Facility*, Rev. 1, Westinghouse Hanford Company, Richland, Washington.

WHC-EP-0846, 1995, *Waste Specification System*, Rev. 0, Westinghouse Hanford Company, Richland, Washington.

WHC-IP-0263-TF, 1994, *Tank Farms Building Emergency Plan*, Rev. 2, Westinghouse Hanford Company, Richland, Washington.

WHC-IP-0971, 1997, *Tank Waste Remediation System (TWRS) Emergency Preparedness Program Plan*, Rev. 1, Westinghouse Hanford Company, Richland, Washington.

WHC-SD-MP-SRID-001, 1996, *High Level Waste Storage Tank Farms/242-A Evaporator Standards/Requirements Identification Document*, Rev. 1, Westinghouse Hanford Company, Richland, Washington.

WHC-SD-WM-CM-013, 1996, *TWRS Configuration Management Program Plan*, Rev. 0, Westinghouse Hanford Company, Richland, Washington.

WHC-SD-WM-EV-090, 1996, *Tank Farms Transition Projects Waste Minimization/ Pollution Prevention Plan*, Rev. 1, Westinghouse Hanford Company, Richland, Washington.

WHC-SP-0850, 1992, *Maintenance Implementation Plan for Waste Tank Maintenance and Production Management*, Rev. 1, Westinghouse Hanford Company, Richland, Washington.

This page intentionally left blank.

HNF-SD-WM-BIO-001
Revision 1

Tank Waste Remediation System Basis for Interim Operation

Volume II:
Chapters 5, 6, and 7

Prepared by
DE&S Hanford, Inc. for Lockheed Martin Hanford Corporation

Date Published
September 1998

Prepared for the U.S. Department of Energy

FLUOR DANIEL HANFORD, INC.
Richland, Washington

Hanford Management and Integration Contractor for the
U.S. Department of Energy under Contract DE-AC06-96RL13200

Approved for Public Release; Further Dissemination Unlimited

THIS PAGE INTENTIONALLY
LEFT BLANK

TANK WASTE REMEDIATION SYSTEM
BASIS FOR INTERIM OPERATION

CONTENTS

1.0 INTRODUCTION 1-1
1.1 FACILITY MISSION 1-2
1.2 FACILITY BACKGROUND 1-2
1.3 DESCRIPTION OF AUTHORIZATION BASIS 1-3
1.3.1 Open Unreviewed Safety Questions 1-3
1.3.2 Authorization Basis Documents Annual Update 1-4
1.4 REFERENCES 1-4

2.0 FACILITY DESCRIPTION 2-1
2.1 STRUCTURES, SYSTEMS, AND COMPONENTS IMPORTANT TO SAFETY 2-1
2.1.1 Safety-Class Structures, Systems, and Components 2-2
2.1.2 Safety-Significant Structures, Systems, and Components 2-6
2.2 REFERENCES 2-8

3.0 RELEVANT OPERATIONAL HISTORY 3-1
3.1 SIGNIFICANT ABNORMAL OCCURRENCES 3-1
3.2 CHANGES TO STRUCTURES, SYSTEMS, AND COMPONENTS IMPORTANT TO SAFETY 3-2
3.3 SAFETY-RELATED FINDINGS FROM OPERATIONAL READINESS REVIEWS AND INSPECTIONS/AUDITS 3-2
3.3.1 Tank Farm Operations and Facilities Assessments by U.S. Department of Energy 3-3
3.3.2 Independent Oversight Evaluations 3-5
3.3.3 Internal Assessments 3-9
3.4 SUMMARY OF OPEN UNREVIEWED SAFETY QUESTIONS AND SAFETY ISSUES 3-12
3.4.1 Open Unreviewed Safety Questions 3-12
3.4.2 Safety Issues 3-15
3.5 REFERENCES 3-16

4.0 SAFETY MANAGEMENT 4-1
4.1 ORGANIZATIONAL STRUCTURE AND MANAGEMENT RESPONSIBILITIES . . . 4-3
4.2 STANDARDS/REQUIREMENTS IDENTIFICATION DOCUMENT 4-4
4.3 CRITICALITY PROTECTION 4-4
4.4 RADIOLOGICAL PROTECTION 4-5
4.5 HAZARDOUS MATERIAL PROTECTION 4-5
4.6 RADIOACTIVE AND HAZARDOUS MATERIAL WASTE MANAGEMENT 4-6
4.7 TESTING, SURVEILLANCE, AND MAINTENANCE 4-7
4.8 CONDUCT OF OPERATIONS 4-8
4.9 WORK CONTROL 4-8
4.10 FIRE PROTECTION PROGRAM 4-8
4.11 TRAINING AND PROCEDURES 4-9
4.12 QUALITY ASSURANCE 4-10
4.13 EMERGENCY PREPAREDNESS 4-11

CONTENTS (cont)

4.14 DECONTAMINATION AND DECOMMISSIONING 4-12
4.15 CONFIGURATION MANAGEMENT 4-12
4.16 OCCURRENCE REPORTING 4-13
4.17 UNREVIEWED SAFETY QUESTIONS 4-13
4.18 HUMAN FACTORS 4-14
4.19 REFERENCES 4-14

5.0 SAFETY ANALYSIS 5.0-1
5.1 HAZARD CLASSIFICATION 5.1-1
5.1.1 References 5.1-1
5.2 HAZARD ANALYSIS 5.2-1
5.2.1 Methodology 5.2-1
5.2.2 Hazard Analysis Results 5.2-6
5.2.3 References 5.2-13
5.3 ACCIDENT ANALYSIS 5.3.1-1
5.3.1 Methodology 5.3.1-1
5.3.1.1 Radiological Consequence Calculation Methodology 5.3.1-1
5.3.1.2 Toxicological Consequence Calculation Methodology 5.3.1-4
5.3.1.3 Basis for Estimating Accident Frequency 5.3.1-5
5.3.1.4 References 5.3.1-5

5.3.2 Accident Analysis Scenarios 5.3.2-1
5.3.2.1 Nuclear Criticality 5.3.2.1-1
5.3.2.2 HEPA Filter Failure - Exposure to High Temperature or Pressure 5.3.2.2-1
5.3.2.3 Fire In Contaminated Area 5.3.2.3-1
5.3.2.4 Evaporator Dump 5.3.2.4-1
5.3.2.5 Steam Intrusion From Interfacing Systems . . . 5.3.2.5-1
5.3.2.6 Leak from Railcar/Tank Trailer 5.3.2.6-1
5.3.2.7 Subsurface Leak Remaining Subsurface 5.3.2.7-1
5.3.2.8 Unplanned Excavation/Drilling in Crib/Ditch/Pond 5.3.2.8-1
5.3.2.9 Caustic Spray Leak 5.3.2.9-1
5.3.2.10 Sodium Fire 5.3.2.10-1
5.3.2.11 Mixing of Incompatible Material - Toxic Vapor Generation 5.3.2.11-1
5.3.2.12 Mixing of Incompatible Material - Tank Pressurization 5.3.2.12-1
5.3.2.13 Tank Failure Due to Excessive Loads 5.3.2.13-1
5.3.2.14 Flammable Gas Deflagrations 5.3.2.14-1
5.3.2.15 Organic Solvent Fire 5.3.2.15-1
5.3.2.16 In-Tank Fuel Fire/Deflagration 5.3.2.16-1
5.3.2.17 Organic Salt-Nitrate Reaction 5.3.2.17-1
5.3.2.18 Surface Leak Resulting in Pool 5.3.2.18-1
5.3.2.19 Subsurface Leak Resulting in Pool 5.3.2.19-1
5.3.2.20 Spray Leak in Structure or From Overground Waste Transfer Line 5.3.2.20-1
5.3.2.21 Spray Leak from Underground Waste Transfer Lines 5.3.2.21-1

CONTENTS (cont)

5.3.2.22 Tank Bump 5.3.2.22-1
5.3.2.23 Natural Phenomena 5.3.2.23-1
5.3.2.23.1 High Wind 5.3.2.23-1
5.3.2.23.2 Lightning 5.3.2.23-7
5.3.2.23.3 Seismic Events 5.3.2.23-11
5.4 ENGINEERED AND ADMINISTRATIVE CONTROLS 5.4-1
5.4.1 Control Decision Criteria 5.4-1
5.4.2 Public and Onsite Worker Protection 5.4-4
5.4.3 Facility Worker Protection 5.4-4
5.4.4 Environmental Protection 5.4-4
5.4.5 References 5.4-5

6.0 OPERATIONAL CONTROLS 6-1
6.1 BASIS FOR INTERIM OPERATION CONTROLS 6-1
6.1.1 Scope of Controls 6-1
6.1.2 Control Selection Process 6-2
6.1.3 Specific Basis for Interim Operation Controls 6-2
6.2 REFERENCES 6-3

7.0 CONCLUSIONS 7-1
7.1 GENERAL AND SPECIFIC CONCLUSIONS 7-1
7.2 SUMMARY CONCLUSIONS 7-3
7.3 REFERENCES 7-3

APPENDIXES:

A BASIS FOR INTERIM OPERATION DEVELOPMENT PROCESS . . . . . A-i
B FACILITY AND PROCESS DESCRIPTION B2-i
C SITE CHARACTERISTICS . . . . . C-i
D HAZARD ANALYSIS RESULTS REPORT . . . . . D-i
E FLAMMABLE GAS/SLURRY GROWTH UNREVIEWED SAFETY QUESTION: JUSTIFICATION FOR CONTINUED OPERATION FOR THE TANK FARMS AT THE HANFORD SITE . . . . . E-i
F SITEWIDE CONTROLLED MANUAL CROSS-REFERENCE TABLE . . . . . F-i

ADDENDA:

ADDENDUM 1 TANK 241-C-106 SLUICING SAFETY ANALYSIS
ADDENDUM 2 SAFETY ANALYSIS FOR THE REPLACEMENT CROSS-SITE TRANSFER SYSTEM
ADDENDUM 3 702-AZ VENTILATION SYSTEM (241-AZ-702) SAFETY ANALYSIS
ADDENDUM 4 MIXER PUMP TEST (241-AZ-101) SAFETY ANALYSIS

LIST OF FIGURES

5.3.2.1-1 Perspective of Hanford Site Waste Tank Subcritical Limits–Plutonium Critical Mass Versus Concentration (Spherical Geometry) 5.3.2.1-9

LIST OF TABLES

3-1 Safety Issues for the Tank Waste Remediation System T3-1

3-2 System Deficiencies for the Tank Waste Remediation System T3-2

5.1-1 Hazard Category for Tank Waste Remediation System Facilities . . 5.1-3

5.2-1 Frequency Categories for Tank Waste Remediation System Facilities 5.2-11

5.2-2 Consequence Categories for Tank Waste Remediation System Facilities 5.2-11

5.2-3 Applicable Hazard Evaluations for Tank Waste Remediation System Facilities 5.2-13

5.2-4 Natural Phenomena, External Events, and Common Cause Hazards for Tank Waste Remediation System Facilities 5.2-42

5.2-5 Representative Accidents Analyzed and Cross-Reference to Basis for Interim Operation Accident Analysis Sections 5.2-43

5.3.1-1 Representative Accidents Analyzed and Cross-Reference to Basis for Interim Operation Accident Analysis Sections . . . 5.3.1-7

5.3.1-2 Radiological Risk Guidelines 5.3.1-8

5.3.1-3 Toxicological Risk Guidelines 5.3.1-8

5.3.1-4 In-Tank Concentrations of the 11 Radionuclides Chosen for Inclusion in Accident Analysis 5.3.1-9

5.3.1-5 Unit Liter Doses for Tank Farm Composites 5.3.1-9

5.3.1-6 Composite Concentrations for the 24 Analytes at the Tank Waste Remediation System Tank Farms 5.3.1-10

5.3.1-7 Worst-Case and Maximum Steady-State Headspace Gas Composite Concentrations in the Tank Waste Remediation System 5.3.1-11

5.3.1-8 Sum-of-Fraction of Risk Guidelines for a Unit Release of Chemicals and Gases 5.3.1-12

LIST OF TABLES (cont)

5.3.2.1-1 H to Pu Atom Ratios 5.3.2.1-10

5.3.2.1-2 Subcritical Ratios 5.3.2.1-10

5.3.2.1-3 Radiological Consequences for Waste Tank Criticality 5.3.2.1-10

5.3.2.1-4 Summary of Toxicological Consequences for Nuclear Criticality Accident Scenario 5.3.2.1-11

5.3.2.1-5 Technical Safety Requirement Controls for Nuclear Criticality Accident Scenario 5.3.2.1-11

5.3.2.2-1 Consequences and Frequencies Assuming No Controls for High-Efficiency Particulate Air Filter Failure-Exposure to High Temperature 5.3.2.2-9

5.3.2.2-2 Consequences and Frequencies Assuming Controls for High-Efficiency Particulate Air Filter Failure-Exposure to High Temperature 5.3.2.2-10

5.3.2.2-3 Safety Structures, Systems, and Components for High-Efficiency Particulate Air Filter Failure—Exposure to High Temperature 5.3.2.2-11

5.3.2.2-4 Technical Safety Requirement Controls for High-Efficiency Particulate Air Filter Failure—Exposure to High Temperature 5.3.2.2-11

5.3.2.2-5 Defense-In-Depth Controls for High-Efficiency Particulate Air Filter Failure—Exposure to High Temperature 5.3.2.2-12

5.3.2.2-6 Total Radiological Dose Consequences Assuming No Controls for a High-Efficiency Particulate Air Filter Failure—Exposure to High Pressure from a Pressurized High-Efficiency Particulate Air Release Event and a Continuous, Unfiltered Release 5.3.2.2-13

5.3.2.2-7 Total Toxicological Exposure Consequences (Sum-of-Fractions) Assuming No Controls from High-Efficiency Particulate Air Filter Failure-Exposure to High Pressure and a Continuous, Unfiltered Release for an Accident Frequency of "Anticipated" 5.3.2.2-14

5.3.2.3-1 Consequences of a Fire in Contaminated Area Assuming No Controls. 5.3.2.3-4

5.3.2.3-2 Technical Safety Requirement Controls for Fire in Contaminated Area 5.3.2.3-4

LIST OF TABLES (cont)

5.3.2.3-3	Defense-In-Depth Controls for Potential Fire in Contaminated Area	5.3.2.3-5
5.3.2.4-1	Consequences of an Evaporator 242-A Dump to Tank 241-AW-102	5.3.2.4-4
5.3.2.4-2	Defense-in-Depth Controls for Evaporator 242-A Dump to Tank 241-AW-102	5.3.2.4-4
5.3.2.5-1	Consequences of a Steam Intrusion from Interfacing Systems	5.3.2.5-4
5.3.2.5-2	Technical Safety Requirement Controls for Steam Intrusion from Interfacing Systems	5.3.2.5-4
5.3.2.5-3	Defense-In-Depth Controls For Steam Intrusion from Interfacing Systems	5.3.2.5-5
5.3.2.6-1	Consequences of a Leak from a Railcar/Tank Trailer	5.3.2.6-5
5.3.2.6-2	Technical Safety Requirement Controls for Potential Railcar/Tank Trailer Leaks at the 204-AR Waste Unloading Facility	5.3.2.6-5
5.3.2.6-3	Defense-in-Depth Controls for Potential Railcar and Tank Trailer Leaks at the 204-AR Waste Unloading Facility	5.3.2.6-6
5.3.2.7-1	Consequences of a Subsurface Leak Remaining Subsurface	5.3.2.7-4
5.3.2.7-2	Items Determined to be Safety-Significant by Extrapolating the Subsurface Leak Remaining Subsurface Accident Scenario to Other Applicable Tank Farm Transfer Equipment and Locations	5.3.2.7-4
5.3.2.7-3	Technical Safety Requirement Controls for Subsurface Leaks Remaining Subsurface	5.3.2.7-5
5.3.2.7-4	Defense-in-Depth Controls that Provide Defense-in-Depth for Potential Subsurface Leak Remaining Subsurface	5.3.2.7-6
5.3.2.8-1	Radioactive Isotopes and Inventory Assumed Present in Crib 216-Z-20	5.3.2.8-4
5.3.2.8-2	The Toxicological Constituents and Concentrations Assumed Present in Crib 216-Z-20	5.3.2.8-4
5.3.2.8-3	Consequences of Unplanned Excavations or Drilling in Cribs, Ditches, and Ponds	5.3.2.8-5

LIST OF TABLES (cont)

5.3.2.8-4 Controls That Provide Defense-in-Depth For Potential Unplanned Excavations or Drilling in Cribs, Ditches, and Ponds 5.3.2.8-5

5.3.2.9-1 Consequences of a Caustic Spray Leak Assuming No Controls 5.3.2.9-4

5.3.2.9-2 Technical Safety Requirement Controls for Caustic Spray Leaks 5.3.2.9-4

5.3.2.9-3 Defense-in-Depth Controls for Caustic Spray Leaks . . . 5.3.2.9-5

5.3.2.10-1 Summary of Consequences and Frequencies for a Sodium Fire without Controls 5.3.2.10-4

5.3.2.10-2 Safety Structures, Systems, and Components for Sodium Fire 5.3.2.10-5

5.3.2.10-3 Defense-in-Depth Controls for Sodium Fire 5.3.2.10-5

5.3.2.11-1 Defense-in-Depth Controls for Chemical Reaction in Double-Contained Receiver Tank 5.3.2.11-3

5.3.2.12-1 Summary of Consequences and Frequencies for Mixing of Incompatible Waste—Tank Pressurization without Controls 5.3.2.12-3

5.3.2.12-2 Summary of Consequences and Frequencies for Mixing of Incompatible Waste—Tank Pressurization with Controls 5.3.2.12-3

5.3.2.12-3 Technical Safety Requirement Controls for Mixing of Incompatible Materials—Tank Pressurization 5.3.2.12-4

5.3.2.12-4 Safety Structures, Systems, and Components for Mixing of Incompatible Materials—Tank Pressurization 5.3.2.12-4

5.3.2.12-5 Defense-in-Depth Controls for Mixing of Incompatible Waste—Tank Pressurization 5.3.2.12-4

5.3.2.13-1 Consequences of a Load Drop Assuming No Controls . . 5.3.2.13-6

5.3.2.13-2 Technical Safety Requirement Controls for Load Drops 5.3.2.13-7

5.3.2.13-3 Defense-in-Depth Controls for Load Drops 5.3.2.13-9

5.3.2.14-1 Results Assuming No Controls Accident Scenario for Flammable Gas Deflagrations 5.3.2.14-10

LIST OF TABLES (cont)

5.3.2.14-2 Safety Systems, Structures, and Components for Flammable Gas Deflagrations 5.3.2.14-11

5.3.2.14-3 Technical Safety Requirement Controls for Flammable Gas Deflagrations 5.3.2.14-13

5.3.2.15-1 Organic Solvent Fire Accident Scenarios Applicable to Different Types of Tanks 5.3.2.15-11

5.3.2.15-2 Onsite Consequences of Organic Solvent Fire Scenarios Assuming No Controls and a Frequency of "Unlikely" 5.3.2.15-12

5.3.2.15-3 Offsite Consequences of Organic Solvent Accident Scenarios Assuming No Controls and a Frequency of "Unlikely" 5.3.2.15-13

5.3.2.15-4 Summary of Accident Frequencies for Organic Solvent Fires Assuming No Controls 5.3.2.15-14

5.3.2.15-5 Technical Safety Requirement Controls for Organic Solvent Fires 5.3.2.15-15

5.3.2.15-6 Organic Solvent Fire Topography 5.3.2.15-16

5.3.2.15-7 Defense-in-Depth Controls for Toxic Vapor Nitrate Fires. 5.3.2.15-21

5.3.2.16-1 Unmitigated Consequences of Vehicle Fuel Pool Fire . . 5.3.2.16-7

5.3.2.16-2 Technical Safety Requirement Controls for Vehicle Fuel Fire/Deflagration 5.3.2.16-7

5.3.2.16-3 Defense-in-Depth Controls of Vehicle Fuel Fire/Deflagration 5.3.2.16-8

5.3.2.17-1 Organic-Nitrate Waste Grouping 5.3.2.17-12

5.3.2.17-2 Summary of Organic-Nitrate Condensed Phase Ignition Source Evaluation 5.3.2.17-13

5.3.2.17-3 Radiological and Toxicological Consequences for 25 m^3 Organic-Nitrate Combustion Accident (No controls in place - accident is "unlikely") 5.3.2.17-14

5.3.2.17-4 Radiological and Toxicological Consequences for 25 m^3 Organic-Nitrate Combustion Accident (Controls in place - Accident is "extremely unlikely") 5.3.2.17-14

LIST OF TABLES (cont)

5.3.2.17-5 Technical Safety Requirement Controls for Organic-Nitrate Condensed-Phase Combustion Accidents 5.3.2.17-15

5.3.2.17-6 Defense-in-Depth Controls for Organic-Salt Nitrate Reactions 5.3.2.17-18

5.3.2.17-7 Safety Structures, Systems, and Components for Organic Salt-Nitrate Reaction 5.3.2.17-19

5.3.2.18-1 Consequences of Surface Leak Resulting in Pool Assuming No Controls 5.3.2.18-7

5.3.2.18-2 Consequences of Surface Leak Resulting in Pool Assuming Controls 5.3.2.18-7

5.3.2.18-3 Safety Structures, Systems, and Components for Surface Leak Resulting in Pool 5.3.2.18-8

5.3.2.18-4 Technical Safety Requirement Controls for Surface Leak Resulting in Pool 5.3.2.18-10

5.3.2.18-5 Defense-in-Depth Controls for Surface Leak Resulting in Pool 5.3.2.18-13

5.3.2.19-1 Consequences of a Subsurface Leak Resulting in Pool Assuming No Controls 5.3.2.19-6

5.3.2.19-2 Consequences of a Subsurface Leak Resulting in Pool Assuming Controls 5.3.2.19-6

5.3.2.19-3 Safety Structures, Systems, and Components for Subsurface Leak Resulting in Pool 5.3.2.19-7

5.3.2.19-4 Technical Safety Requirement Controls for Subsurface Leak Resulting in Pool 5.3.2.19-7

5.3.2.19-5 Defense-in-Depth Controls for Subsurface Leak Resulting in Pool 5.3.2.19-8

5.3.2.20-1 Summary of Consequences and Frequencies without Controls 5.3.2.20-6

5.3.2.20-2 Summary of Consequences and Frequencies with Controls 5.3.2.20-6

5.3.2.20-3 Safety Structures, Systems, and Components for Spray Leaks 5.3.2.20-7

5.3.2.20-4 Technical Safety Requirement Controls for Spray Leaks 5.3.2.20-9

LIST OF TABLES (cont)

5.3.2.20-5 Defense-in-Depth Controls for Transfer System Spray Leaks 5.3.2.20-11

5.3.2.21-1 Technical Safety Requirement Controls for Spray Leak and Surface Pools from Underground Waste Transfer Lines 5.3.2.21-3

5.3.2.21-2 Defense-in-Depth Controls for Spray Leak and Surface Pools from Underground Waste Transfer Lines . . 5.3.2.21-4

5.3.2.22-1 Consequences of a Tank Bump Assuming No Controls . . . 5.3.2.22-5

5.3.2.22-2 Safety Structures, Systems, and Components for Tank Bumps 5.3.2.22-5

5.3.2.22-3 Technical Safety Requirement Controls for Tank Bumps 5.3.2.22-6

5.3.2.22-4 Defense-in-Depth Controls for Tank Bumps 5.3.2.22-7

5.3.2.23.1-1 Estimates of Peak Wind Gusts and Frequencies of Occurrence at the Hanford Site 5.3.2.23-16

5.3.2.23.1-2 Consequences of Flexible Receiver Bag Failure . . . 5.3.2.23-16

5.3.2.23.1-3 Technical Safety Requirement Controls for High Winds 5.3.2.23-16

5.3.2.23.1-4 Defense-in-Depth Controls for High Wind 5.3.2.23-17

5.3.2.23.2-1 Technical Safety Requirement Controls for Lightning as an Accident Initiator 5.3.2.23-17

5.3.2.23.2-2 Defense-in-Depth Controls for Lightning as an Accident Initiator 5.3.2.23-18

5.3.2.23.3-1 Technical Safety Requirement Controls for Seismic Event 5.3.2.23-18

5.4-1 Safety Structures, Systems, and Components and Technical Safety Requirements for Potential S3 and S2 Consequences . . 5.4-7

5.4-2 Safety Structures, Systems, and Components and Technical Safety Requirements for Potential S1 Consequences with F3 Frequency 5.4-114

5.4-3 Safety Structures, Systems, and Components and Technical Safety Requirements for Potentially Severe (E3 and E2) Environmental Consequences 5.4-161

LIST OF TABLES (cont)

6-1 Hazard and Accident Analyses; Safety Structures, Systems, and Components; and Technical Safety Requirement Cross Reference T6-1

7-1 Listing of Considerations to Further Reduce Risk T7-1

This page intentionally left blank.

CHAPTER 5.0
SAFETY ANALYSIS

This page intentionally left blank.

CHAPTER 5.0
SAFETY ANALYSIS

CONTENTS

5.0 SAFETY ANALYSIS 5.0-1
5.1 HAZARD CLASSIFICATION 5.1-1
5.1.1 References 5.1-1
5.2 HAZARD ANALYSIS 5.2-1
5.2.1 Methodology 5.2-1
5.2.1.1 Hazard Identification 5.2-2
5.2.1.2 Hazard Evaluation 5.2-2
5.2.1.3 Accident Selection 5.2-3
5.2.1.4 Controls Identification 5.2-5
5.2.2 Hazard Analysis Results 5.2-6
5.2.2.1 Hazard Identification 5.2-6
5.2.2.2 Hazard Evaluation 5.2-7
5.2.3 References 5.2-9
5.3 ACCIDENT ANALYSIS 5.3.1-1
5.3.1 Methodology 5.3.1-1
5.3.1.1 Radiological Consequence Calculation Methodology 5.3.1-1
5.3.1.2 Toxicological Consequence Calculation Methodology 5.3.1-4
5.3.1.3 Basis for Estimating Accident Frequency 5.3.1-5
5.3.1.4 References 5.3.1-5
5.3.2 Accident Analysis Scenarios 5.3.2-1
5.3.2.1 Nuclear Criticality 5.3.2.1-1
5.3.2.2 HEPA Filter Failure - Exposure to High Temperature or Pressure 5.3.2.2-1
5.3.2.3 Fire In Contaminated Area. 5.3.2.3-1
5.3.2.4 Evaporator Dump 5.3.2.4-1
5.3.2.5 Steam Intrusion From Interfacing Systems . . . 5.3.2.5-1
5.3.2.6 Leak from Railcar/Tank Trailer 5.3.2.6-1
5.3.2.7 Subsurface Leak Remaining Subsurface 5.3.2.7-1
5.3.2.8 Unplanned Excavation/Drilling in Crib/Ditch/Pond 5.3.2.8-1
5.3.2.9 Caustic Spray Leak 5.3.2.9-1
5.3.2.10 Sodium Fire 5.3.2.10-1
5.3.2.11 Mixing of Incompatible Material - Toxic Vapor Generation 5.3.2.11-1
5.3.2.12 Mixing of Incompatible Material - Tank Pressurization 5.3.2.12-1
5.3.2.13 Tank Failure Due to Excessive Loads 5.3.2.13-1
5.3.2.14 Flammable Gas Deflagrations 5.3.2.14-1
5.3.2.15 Organic Solvent Fire 5.3.2.15-1
5.3.2.16 In-Tank Fuel Fire/Deflagration 5.3.2.16-1
5.3.2.17 Organic Salt-Nitrate Reaction 5.3.2.17-1
5.3.2.18 Surface Leak Resulting in Pool 5.3.2.18-1
5.3.2.19 Subsurface Leak Resulting in Pool 5.3.2.19-1
5.3.2.20 Spray Leak in Structure or From Overground Waste Transfer Line 5.3.2.20-1

CONTENTS (cont)

5.3.2.21 Spray Leak from Underground Waste Transfer Lines 5.3.2.21-1
5.3.2.22 Tank Bump 5.3.2.22-1
5.3.2.23 Natural Phenomena 5.3.2.23-1
5.3.2.23.1 High Wind 5.3.2.23-1
5.3.2.23.2 Lightning 5.3.2.23-7
5.3.2.23.3 Seismic Events 5.3.2.23-11
5.4 ENGINEERED AND ADMINISTRATIVE CONTROLS 5.4-1
5.4.1 Control Decision Criteria 5.4-1
5.4.2 Public and Onsite Worker Protection 5.4-4
5.4.3 Facility Worker Protection 5.4-4
5.4.4 Environmental Protection 5.4-4
5.4.5 References 5.4-5

LIST OF FIGURES

5.3.2.1-1 Perspective of Hanford Site Waste Tank Subcritical Limits–Plutonium Critical Mass Versus Concentration (Spherical Geometry) 5.3.2.1-9

LIST OF TABLES

5.1-1 Hazard Category for Tank Waste Remediation System Facilities . . 5.1-3

5.2-1 Frequency Categories for Tank Waste Remediation System Facilities 5.2-11

5.2-2 Consequence Categories for Tank Waste Remediation System Facilities 5.2-11

5.2-3 Applicable Hazard Evaluations for Tank Waste Remediation System Facilities 5.2-13

5.2-4 Natural Phenomena, External Events, and Common Cause Hazards for Tank Waste Remediation System Facilities 5.2-42

5.2-5 Representative Accidents Analyzed and Cross-Reference to Basis for Interim Operation Accident Analysis Sections . . . 5.2-43

5.3.1-1 Representative Accidents Analyzed and Cross-Reference to Basis for Interim Operation Accident Analysis Sections 5.3.1-7

5.3.1-2 Radiological Risk Guidelines 5.3.1-8

5.3.1-3 Toxicological Risk Guidelines 5.3.1-8

5.3.1-4 In-Tank Concentrations of the 11 Radionuclides Chosen for Inclusion in Accident Analysis 5.3.1-9

5.3.1-5 Unit Liter Doses for Tank Farm Composites 5.3.1-9

5.3.1-6 Composite Concentrations for the 24 Analytes at the Tank Waste Remediation System Tank Farms 5.3.1-10

5.3.1-7 Worst-Case and Maximum Steady-State Headspace Gas Composite Concentrations in the Tank Waste Remediation System 5.3.1-11

5.3.1-8 Sum-of-Fraction of Risk Guidelines for a Unit Release of Chemicals and Gases 5.3.1-12

5.3.2.1-1 H to Pu Atom Ratios 5.3.2.1-10

5.3.2.1-2 Subcritical Ratios 5.3.2.1-10

LIST OF TABLES (cont)

5.3.2.1-3 Radiological Consequences for Waste Tank Criticality . . 5.3.2.1-10

5.3.2.1-4 Summary of Toxicological Consequences for Nuclear Criticality Accident Scenarios 5.3.2.1-11

5.3.2.1-5 Technical Safety Requirement Controls for Nuclear Criticality Accident Scenario 5.3.2.1-11

5.3.2.2-1 Consequences and Frequencies Assuming No Controls for High-Efficiency Particulate Air Filter Failure-Exposure to High Temperature 5.3.2.2-9

5.3.2.2-2 Consequences and Frequencies Assuming Controls for High-Efficiency Particulate Air Filter Failure-Exposure to High Temperature 5.3.2.2-10

5.3.2.2-3 Safety Structures, Systems, and Components for High-Efficiency Particulate Air Filter Failure—Exposure to High Temperature 5.3.2.2-11

5.3.2.2-4 Technical Safety Requirement Controls for High-Efficiency Particulate Air Filter Failure—Exposure to High Temperature 5.3.2.2-11

5.3.2.2-5 Defense-in-Depth Controls for High-Efficiency Particulate Air Filter Failure—Exposure to High Temperature 5.3.2.2-12

5.3.2.2-6 Total Radiological Dose Consequences Assuming No Controls for a High-Efficiency Particulate Air Filter Failure—Exposure to High Pressure from a Pressurized High-Efficiency Particulate Air Release Event and a Continuous, Unfiltered Release 5.3.2.2-13

5.3.2.2-7 Total Toxicological Exposure Consequences (Sum-of-Fractions) Assuming No Controls from High-Efficiency Particulate Air Filter Failure-Exposure to High Pressure and a Continuous, Unfiltered Release for an Accident Frequency of "Anticipated" 5.3.2.2-14

5.3.2.3-1 Consequences of a Fire in Contaminated Area Assuming No Controls. 5.3.2.3-4

5.3.2.3-2 Technical Safety Requirement Controls for Fire in Contaminated Area 5.3.2.3-4

5.3.2.3-3 Defense-in-Depth Controls for Potential Fire in Contaminated Area 5.3.2.3-5

5.3.2.4-1 Consequences of an Evaporator 242-A Dump to Tank 241-AW-102 . . . . . 5.3.2.4-4

LIST OF TABLES (cont)

5.3.2.4-2 Defense-in-Depth Controls for Evaporator 242-A Dump to Tank 241-AW-102 . . . . . 5.3.2.4-4

5.3.2.5-1 Consequences of a Steam Intrusion from Interfacing Systems 5.3.2.5-4

5.3.2.5-2 Technical Safety Requirement Controls for Steam Intrusion from Interfacing Systems 5.3.2.5-4

5.3.2.5-3 Defense-in-Depth Controls For Steam Intrusion from Interfacing Systems 5.3.2.5-5

5.3.2.6-1 Consequences of a Leak from a Railcar/Tank Trailer . . . 5.3.2.6-5

5.3.2.6-2 Technical Safety Requirement Controls for Potential Railcar/Tank Trailer Leaks at the 204-AR Waste Unloading Facility 5.3.2.6-5

5.3.2.6-3 Defense-in-Depth Controls for Potential Railcar and Tank Trailer Leaks at the 204-AR Waste Unloading Facility. 5.3.2.6-6

5.3.2.7-1 Consequences of a Subsurface Leak Remaining Subsurface 5.3.2.7-4

5.3.2.7-2 Items Determined to be Safety-Significant by Extrapolating the Subsurface Leak Remaining Subsurface Accident Scenario to Other Applicable Tank Farm Transfer Equipment and Locations 5.3.2.7-4

5.3.2.7-3 Technical Safety Requirement Controls for Subsurface Leaks Remaining Subsurface 5.3.2.7-5

5.3.2.7-4 Defense-in-Depth Controls that Provide Defense-in-Depth for Potential Subsurface Leak Remaining Subsurface 5.3.2.7-6

5.3.2.8-1 Radioactive Isotopes and Inventory Assumed Present in Crib 216-Z-20 . . . . . 5.3.2.8-4

5.3.2.8-2 The Toxicological Constituents and Concentrations Assumed Present in Crib 216-Z-20 . . . . . 5.3.2.8-4

5.3.2.8-3 Consequences of Unplanned Excavations or Drilling in Cribs, Ditches, and Ponds 5.3.2.8-5

5.3.2.8-4 Controls That Provide Defense-in-Depth For Potential Unplanned Excavations or Drilling in Cribs, Ditches, and Ponds 5.3.2.8-5

LIST OF TABLES (cont)

5.3.2.9-1 Consequences of a Caustic Spray Leak Assuming No Controls 5.3.2.9-4

5.3.2.9-2 Technical Safety Requirement Controls for Caustic Spray Leaks 5.3.2.9-4

5.3.2.9-3 Defense-in-Depth Controls for Caustic Spray Leaks . . . 5.3.2.9-5

5.3.2.10-1 Summary of Consequences and Frequencies for a Sodium Fire without Controls 5.3.2.10-4

5.3.2.10-2 Safety Structures, Systems, and Components for Sodium Fire 5.3.2.10-5

5.3.2.10-3 Defense-in-Depth Controls for Sodium Fire 5.3.2.10-5

5.3.2.11-1 Defense-in-Depth Controls for Chemical Reaction in Double-Contained Receiver Tank 5.3.2.11-3

5.3.2.12-1 Summary of Consequences and Frequencies for Mixing of Incompatible Waste—Tank Pressurization without Controls 5.3.2.12-3

5.3.2.12-2 Summary of Consequences and Frequencies for Mixing of Incompatible Waste—Tank Pressurization with Controls 5.3.2.12-3

5.3.2.12-3 Technical Safety Requirement Controls for Mixing of Incompatible Materials—Tank Pressurization 5.3.2.12-4

5.3.2.12-4 Safety Structures, Systems, and Components for Mixing of Incompatible Materials—Tank Pressurization 5.3.2.12-4

5.3.2.12-5 Defense-in-Depth Controls for Mixing of Incompatible Waste—Tank Pressurization 5.3.2.12-4

5.3.2.13-1 Consequences of a Load Drop Assuming No Controls . . . 5.3.2.13-6

5.3.2.13-2 Technical Safety Requirement Controls for Load Drops 5.3.2.13-7

5.3.2.13-3 Defense-in-Depth Controls for Load Drops 5.3.2.13-9

5.3.2.14-1 Results Assuming No Controls Accident Scenario for Flammable Gas Deflagrations 5.3.2.14-10

5.3.2.14-2 Safety Systems, Structures, and Components for Flammable Gas Deflagrations 5.3.2.14-11

5.3.2.14-3 Technical Safety Requirement Controls for Flammable Gas Deflagrations 5.3.2.14-13

LIST OF TABLES (cont)

5.3.2.15-1 Organic Solvent Fire Accident Scenarios Applicable to Different Types of Tanks 5.3.2.15-11

5.3.2.15-2 Onsite Consequences of Organic Solvent Fire Scenarios Assuming No Controls and a Frequency of "Unlikely" 5.3.2.15-12

5.3.2.15-3 Offsite Consequences of Organic Solvent Fire Scenarios Assuming No Controls and a Frequency of "Unlikely" 5.3.2.15-13

5.3.5.15-4 Summary of Accident Frequencies for Organic Solvent Fires Assuming No Controls 5.3.2.15-14

5.3.2.15-5 Technical Safety Requirement Controls for Organic Solvent Fires 5.3.2.15-15

5.3.2.15-6 Organic Solvent Fire Topography 5.3.2.15-16

5.3.2.15-7 Defense-in-Depth Controls for Toxic Vapor Nitrate Fires. 5.3.2.15-21

5.3.2.16-1 Unmitigated Consequences of Vehicle Fuel Pool Fire . . 5.3.2.16-7

5.3.2.16-2 Technical Safety Requirement Controls for Vehicle Fuel Fire/Deflagration 5.3.2.16-7

5.3.2.16-3 Defense-in-Depth Controls of Vehicle Fuel Fire/Deflagration 5.3.2.16-8

5.3.2.17-1 Organic-Nitrate Waste Grouping 5.3.2.17-12

5.3.2.17-2 Summary of Organic-Nitrate Condensed Phase Ignition Source Evaluation 5.3.2.17-13

5.3.2.17-3 Radiological and Toxicological Consequences for 25 m^3 Organic-Nitrate Combustion Accident (No controls in place - accident is "unlikely") 5.3.2.17-14

5.3.2.17-4 Radiological and Toxicological Consequences for 25 m^3 Organic-Nitrate Combustion Accident (Controls in place - Accident is "extremely unlikely") 5.3.2.17-14

5.3.2.17-5 Technical Safety Requirement Controls for Organic-Nitrate Condensed-Phase Combustion Accidents 5.3.2.17-15

5.3.2.17-6 Defense-in-Depth Controls for Organic-Salt Nitrate Reactions 5.3.2.17-18

LIST OF TABLES (cont)

5.3.2.17-7 Safety Structures, Systems, and Components for Organic Salt-Nitrate Reaction. 5.3.2.17-19

5.3.2.18-1 Consequences of Surface Leak Resulting in Pool Assuming No Controls 5.3.2.18-7

5.3.2.18-2 Consequences of Surface Leak Resulting in Pool Assuming Controls 5.3.2.18-7

5.3.2.18-3 Safety Structures, Systems, and Components for Surface Leak Resulting in Pool 5.3.2.18-8

5.3.2.18-4 Technical Safety Requirement Controls for Surface Leak Resulting in Pool 5.3.2.18-10

5.3.2.18-5 Defense-in-Depth Controls for Surface Leak Resulting in Pool 5.3.2.18-13

5.3.2.19-1 Consequences of a Subsurface Leak Resulting in Pool Assuming No Controls 5.3.2.19-6

5.3.2.19-2 Consequences of a Subsurface Leak Resulting in Pool Assuming Controls 5.3.2.19-6

5.3.2.19-3 Safety Structures, Systems, and Components for Subsurface Leak Resulting in Pool 5.3.2.19-7

5.3.2.19-4 Technical Safety Requirement Controls for Subsurface Leak Resulting in Pool 5.3.2.19-7

5.3.2.19-5 Defense-in-Depth Controls for Subsurface Leak Resulting in Pool 5.3.2.19-8

5.3.2.20-1 Summary of Consequences and Frequencies without Controls 5.3.2.20-6

5.3.2.20-2 Summary of Consequences and Frequencies with Controls 5.3.2.20-6

5.3.2.20-3 Safety Structures, Systems, and Components for Spray Leaks 5.3.2.20-7

5.3.2.20-4 Technical Safety Requirement Controls for Spray Leaks 5.3.2.20-9

5.3.2.20-5 Defense-in-Depth Controls for Transfer System Spray Leaks 5.3.2.20-11

5.3.2.21-1 Technical Safety Requirement Controls for Spray Leak and Surface Pools from Underground Waste Transfer Lines 5.3.2.21-3

LIST OF TABLES (cont)

5.3.2.21-2 Defense-in-Depth Controls for Spray Leak and Surface Pools from Underground Waste Transfer Lines 5.3.2.21-4

5.3.2.22-1 Consequences of a Tank Bump Assuming No Controls 5.3.2.22-5

5.3.2.22-2 Safety Structures, Systems, and Components for Tank Bumps 5.3.2.22-5

5.3.2.22-3 Technical Safety Requirement Controls for Tank Bumps 5.3.2.22-6

5.3.2.22-4 Defense-in-Depth Controls for Tank Bumps 5.3.2.22-7

5.3.2.23.1-1 Estimates of Peak Wind Gusts and Frequencies of Occurrence at the Hanford Site 5.3.2.23-16

5.3.2.23.1-2 Consequences of Flexible Receiver Bag Failure . . . 5.3.2.23-16

5.3.2.23.1-3 Technical Safety Requirement Controls for High Winds 5.3.2.23-16

5.3.2.23.1-4 Defense-in-Depth Controls for High Wind 5.3.2.23-17

5.3.2.23.2-1 Technical Safety Requirement Controls for Lightning as an Accident Initiator 5.3.2.23-17

5.3.2.23.2-2 Defense-in-Depth Controls for Lightning as an Accident Initiator 5.3.2.23-18

5.3.2.23.3-1 Technical Safety Requirement Controls for Seismic Event 5.3.2.23-18

5.4-1 Safety Structures, Systems, and Components and Technical Safety Requirements for Potential S3 and S2 Consequences . . 5.4-7

5.4-2 Safety Structures, Systems, and Components and Technical Safety Requirements for Potential S1 Consequences with F3 Frequency 5.4-114

5.4-3 Safety Structures, Systems, and Components and Technical Safety Requirements for Potentially Severe (E3 and E2) Environmental Consequences 5.4-161

This page intentionally left blank.

LIST OF TERMS

AC	Administrative Control
ADF	aerosol depletion factor
AWF	Aging Waste Facility
BIO	Basis for Interim Operation
Bq	becquerel
CAM	continuous air monitor
Ci	curie
COB	cleanout box
CPS	criticality prevention specification
CSER	criticality safety evaluation report
DCRT	double-contained receiver tank
DST	double-shell tank
EDTA	ethylenediaminetetraacetic acid
ERPG	Emergency Response Planning Guide
FSAR	Final Safety Analysis Report
HazOp	hazard and operability study
HEME	high-efficiency mist eliminator
HEPA	high-efficiency particulate air (filter)
HEDTA	hydroxyethylethylenediaminetriacetic acid
HMP	Hazardous Material Protection
HS	headspace
GRE	gas release event
JCO	Justification for Continued Operation
LCO	Limiting Condition for Operation
LFL	lower flammability limit
n/a	not applicable
NTA	nitrilotriacetic acid
MAR	material at risk
MISF	miscellaneous interim storage facility
mSv	millisievert
OGT	overground transfer
PEL	permissible exposure limit
PFP	Plutonium Finishing Plant
PHA	preliminary hazards analysis
psig	pounds per square inch gauge
RCRA	*Resource Conservation and Recovery Act of 1976*
RMCS	rotary mode core sampling
SC	Safety-Class
SS	Safety-Significant
SOF	sum-of-fractions
SSC	structure, system, and component
SST	single-shell tank
TBP	tributyl phosphate
TOC	total organic carbon
TSR	Technical Safety Requirement
TWA	time-weighted average
TWRS	Tank Waste Remediation System
USQ	Unreviewed Safety Question
WF	weight factor
WRSS	Waste Retrieval Sluicing System

This page intentionally left blank.

5.0 SAFETY ANALYSIS

The safety analysis of the Tank Waste Remediation System (TWRS) facilities and operations that support this Basis for Interim Operation (BIO) is described in this chapter. The safety analysis includes hazard and accident analyses, and provides the basis for the interim controls required for protection of the public, onsite workers, facility workers, and the environment.

The safety analysis for this TWRS BIO exceeds the minimum requirements established in DOE-STD-3011-94, *Guidance for Preparation of DOE 5480.22 (TSR) and DOE 5480.23 (SAR) Implementation Plans*. The DOE-STD-3011-94 requirements are surpassed because much of the hazard and accident analyses being performed for the TWRS Final Safety Analysis Report (FSAR) were available and used in establishing this interim safety basis. The hazard and accident analyses that are continuing for the FSAR development will build on the BIO safety analysis. Revisions to the BIO safety analysis and the derived interim controls are expected in the FSAR due to the continuing hazard and accident analyses and associated work on technical issues such as flammable gas and organic salt-nitrate reactions. The FSAR will also provide more extensive and comprehensive discussions of the hazard and accident analysis methodology and results and of the derivation of controls.

The hazard classification of TWRS facilities, performed in accordance with DOE 5480.23, *Nuclear Safety Analysis Reports*, and DOE-STD-1027-92, *Hazard Categorization and Accident Analysis Techniques for Compliance with DOE Order 5480.23, Nuclear Safety Analysis Reports*, is provided in Section 5.1, "Hazard Classification." Section 5.2, "Hazard Analysis," and Section 5.3, "Accident Analysis," describe the analysis methodology and the results of the hazard and accident analyses of TWRS facilities and operations, respectively. Controls that protect the public, onsite workers, facility workers, and the environment from the hazardous conditions identified for TWRS facilities and operations are presented in Section 5.4, "Engineered and Administrative Controls." Section 5.4 also discusses the criteria used for making control decisions.

The interim controls derived from the hazard and accident analyses in this chapter include the following:

- Safety-Class and Safety-Significant structures, systems, and components (SSCs) and Technical Safety Requirements (TSRs)
- Controls providing Defense-in-Depth
- Controls specifically for environmental protection.

Safety SSCs and TSRs required for the protection of the public, onsite workers, and facility workers are based on the qualitative hazard analysis and the quantitative accident analysis (Sections 5.2, 5.3, and 5.4). Controls that provide Defense-in-Depth are identified for the analyzed representative accidents in Section 5.3. Defense-in-Depth controls are existing engineered features or administrative programs or procedures that may further reduce the risk of an accident, but are not essential requirements like safety SSC and

TSR controls. In addition to safety SSCs, TSRs, and Defense-in-Depth controls identified for protection of the public, onsite workers, and facility workers, controls specifically for the protection of the environment are discussed in Section 5.2.2.2.3, "Environmental Protection," and Section 5.4.

The TWRS BIO safety analysis and the interim controls derived from the safety analysis address and encompass the following open TWRS Unreviewed Safety Questions (USQs).

- **Flammable Gas and Slurry Growth USQ**—The BIO safety analysis and interim controls incorporate Appendix E, "Flammable Gas/Slurry Growth Unreviewed Safety Question: Justification for Continued Operation for the Tank Farm at the Hanford Site." The controls on the Tank 241-SY-101 mixer pump required in closure of the original flammable gas USQ are also included in the BIO interim controls (Kinzer 1996, *Closure of Hanford Tank 241-SY-101 Flammable Gas Unreviewed Safety Question (USQ)*; and Wagoner 1996b, *RL Approval of Engineering Change Notice (ECN) 169389 to Interim Operational Safety Requirements*) (Section 5.3.2.14, "Flammable Gas Deflagrations").

- **Condensed-Phase Organic Nitrate Reaction USQ**—The BIO safety analysis and the interim controls that provide the Authorization Basis for the Condensed-Phase Organic Nitrate Reaction USQ (Wagoner 1996a, *Recommendation for Declaring an Unreviewed Safety Question (USQ) Regarding Condensed-Phase Organic Nitrate Reactions*) are included in the BIO (Section 5.3.2.17, "Organic Salt-Nitrate Reaction"). (Note: There will be no separate justification for continued operation [JCO] for the Condensed-Phase Organic Nitrate Reaction USQ.)

- **Soil Density Discrepancy in AP Tank Farm USQ**—The BIO safety analysis and interim controls incorporate the Authorization Basis established by the approved JCO for the Soil Density Discrepancy Discovery in AP Tank Farm USQ (Lee 1994, *Request for Approval-Justification for Continued Operations-Dome Loading*; and Wagoner 1995, *Justification for Continued Operation, Tank Farm Dome Loading*), and the open safety issue on high heat related to Tank 241-C-106 (Section 5.3.2.13, "Tank Failure Due to Excessive Loads").

BIO Addendum 1, "Tank 241-C-106 Sluicing Safety Analysis" and the associated TSR changes close the USQ Tracking Number TF-95-0105, *Project W-320, C-106 Sluicing and Waste Retrieval for Storage in AY-102.* BIO Addendum 2, "Replacement Cross-Site Transfer System Safety Analysis" and associated TSR changes close the USQ Tracking Number TF-96-1007, *Replacement Cross-Site Transfer System Tie-Ins at 244 A-Lift Station and 241-SY Valve Pits.* BIO Addendum 3, "702-AZ Ventilation System (241-AZ-702) Safety Analysis" and associated TSR changes close the USQ Tracking Number TF-93-0055, *Tank Farm Ventilation Upgrade, Project W-030.* BIO Addendum 4 and associated TSR changes close USQ Tracking Number TF-94-0266, *Mixer Pump Process Test for Waste in 241-AZ-101, Aging Waste Double-Shell Tank (W-151).*

References

DOE 5480.23, 1994, *Nuclear Safety Analysis Reports*, Change 1, U.S. Department of Energy, Washington, D.C.

DOE-STD-1027-92, 1992, *Hazard Categorization and Accident Analysis Techniques for Compliance with DOE Order 5480.23, Nuclear Safety Analysis Reports*, U.S. Department of Energy, Washington, D.C.

DOE-STD-3011-94, 1994, *Guidance for Preparation of DOE 5480.22 (TSR) and DOE 5480.23 (SAR) Implementation Plans*, U.S. Department of Energy, Washington, D.C.

Kinzer, J., 1996, *Closure of Hanford Tank 241-SY-101 Flammable Gas Unreviewed Safety Question (USQ)* (memo WSD:CAG 96-WSD-065 to M. A. Hunemuller, June 21), U.S. Department of Energy, Richland Operations Office, Richland, Washington.

Lee, J. L., 1994, *Request for Approval-Justification for Continued Operations-Dome Loading* (external letter 9456832 to A. B. Sidpara, U.S. Department of Energy, Richland Operations Office, October 6), Westinghouse Hanford Company, Richland, Washington.

TF-93-0055 (USQ Tracking No.), 1996, *Tank Farm Ventilation Upgrade, Project W-030*, Rev. 3, Westinghouse Hanford Company, Richland, Washington.

TF-94-0266 (USQ Tracking No.), 1996, *Mixer Pump Process Test for Waste in 241-AZ-101, Aging Waste Double-Shell Tank (W-151)*, Rev. 1, Westinghouse Hanford Company, Richland, Washington.

TF-95-0105 (USQ Tracking No.), 1995, *Project W-320, C-106 Sluicing and Waste Retrieval for Storage in AY-102*, Rev. 0, Westinghouse Hanford Company, Richland, Washington.

TF-96-1007 (USQ Tracking No.), 1996, *Replacement Cross-Site Transfer System Tie-Ins at 244-A Lift Station and 241-SY Valve Pits*, Rev. 0, Lockheed Martin Hanford Company, Richland, Washington.

Wagoner, J. D., 1995, *Justification for Continued Operation, Tank Farm Dome Loading* (memo TOP:GZM 94-TOP-173 to A. L. Trego, Westinghouse Hanford Company, January 6), U.S. Department of Energy, Richland Operations Office, Richland, Washington.

Wagoner, J. D., 1996a, *Recommendation for Declaring an Unreviewed Safety Question (USQ) Regarding Condensed-Phase Organic Nitrate Reactions* (letter 96-WSD-073 to A. L. Trego, Westinghouse Hanford Company, May 24), U.S. Department of Energy, Richland Operations Office, Richland, Washington.

Wagoner, J. D., 1996b, *RL Approval of Engineering Change Notice (ECN) 169389 to Interim Operational Safety Requirements* (letter 96-WSD-031 to A. L. Trego, Westinghouse Hanford Company, May 10), U.S. Department of Energy, Richland Operations Office, Richland, Washington.

This page intentionally left blank.

5.1 HAZARD CLASSIFICATION

DOE 5480.23, *Nuclear Safety Analysis Reports*, requires the hazard classification of nuclear facilities and operations. Guidelines for hazard classification that meet the requirements of DOE 5480.23 are provided in DOE-STD-1027-92, *Hazard Categorization and Accident Analysis Techniques for Compliance with DOE Order 5480.23, Nuclear Safety Analysis Reports*. DOE-STD-1027-92 classifies a facility as either Hazard Category 1, 2, or 3 depending on the quantities of radioactive material in the facility. Hazard Category 2 and 3 facilities contain quantities of radioactive material in excess of the threshold values in Table A.1 of DOE-STD-1027-92. Hazard Category 1 facilities are limited to Category A reactors and facilities designated by the Program Secretarial Officer. A facility that does not exceed the DOE-STD-1027-92 Hazard Category 3 threshold for radioactive material but possesses some amount of radioactive material is considered a Radiological Facility.

A hazard classification of TWRS facilities and operations performed in accordance with DOE-STD-1027-92 determined that all the single-shell tanks, double-shell tanks, Aging Waste Facility tanks, and associated waste transfer systems are Hazard Category 2 facilities. The associated waste transfer systems include the 204-AR Waste Unloading Facility and the 244-AR Vault. The Hazard Category classifications for projects are based on supplemental project hazard analysis and are contained in the designated addenda. The Hazard Category 2 classification is based on estimated waste inventories for single-shell tanks, double-shell tanks, and Aging Waste Facility tanks (Dunford 1996, *Tank Waste Remediation System Final Safety Analysis Report Project Plan Comment Response; Risk Based Approach*) that exceed the Hazard Category 2 threshold in DOE-STD-1027-92.

Applying the DOE-STD-1027-92 concept of facility segmentation, there are a number of TWRS facilities that are independent segments where the radioactive and hazardous material in one segment cannot interact with the radioactive and hazardous material in other segments. These independent segments are the vertical storage units; 209-E Storage Area; 2727-W Sodium Storage Facility; 213-W Compactor Building; cribs, ditches, and ponds; and miscellaneous inactive storage facilities. The hazard classification of these facilities is provided in Table 5.1-1 based on their estimated radioactive material inventory.

5.1.1 References

DOE 5480.23, 1994, *Nuclear Safety Analysis Reports*, Change 1, U.S. Department of Energy, Washington, D.C.

DOE-STD-1027-92, 1992, *Hazard Categorization and Accident Analysis Techniques for Compliance with DOE Order 5480.23, Nuclear Safety Analysis Reports*, U.S. Department of Energy, Washington, D.C.

Dunford, G. L., 1996, *Tank Waste Remediation System Final Safety Analysis Report Project Plan Comment Response; Risk Based Approach*, (external memo 9651491 to D. H. Alexander, U.S. Department of Energy, Richland Operations Office, April 3) Westinghouse Hanford Company, Richland, Washington.

Resource Conservation and Recovery Act of 1976, 42 USC 6901, et seq.

Table 5.1-1. Hazard Category for Tank Waste Remediation System Facilities.

TWRS facility	Function	Independent segment	Hazard category
Double-shell tanks (including Aging Waste Facility tanks), and associated waste* transfer systems	Storage and transfer of high-level radioactive waste	No	2
Single-shell tanks and associated waste* transfer systems	Storage and transfer of high-level radioactive waste	No	2
204-AR Waste Unloading Facility	Transfer of dilute waste to TWRS from other Hanford Site facilities	No	2
244-AR Vault	Lag storage and transfer of plutonium uranium extraction (PUREX) waste to TWRS	No	2
Vertical storage units	Storage of contaminated tank equipment	Yes	3
209-E Storage Area	Temporary storage of RCRA and low-level mixed waste before disposal	Yes	3
2727-W Sodium Storage Facility	Sodium metal storage	Yes	Radiological facility
213-W Compactor Building	Contaminated instrument repair	Yes	3
Cribs, ditches, and ponds	Capture of wastewater and effluent discharge	Yes	3
Miscellaneous inactive storage facilities	Storage of various materials ranging from tank waste to diesel fuel to sewage	Yes	2
Tank 241-C-106 Waste Retrieval Sluicing System (WRSS), Project W-320	Retrieval of waste from Tank 241-C-106 and transfer to Tank 241-AY-102 using sluicing techniques	No	2

*Double-contained receiver tanks, catch tanks, process pits, diversion boxes, vault pits, cleanout boxes, and transfer lines.
RCRA = Resource Conservation and Recovery Act of 1976, 42 USC 6901.
TWRS = Tank Waste Remediation System.

This page intentionally left blank.

5.2 HAZARD ANALYSIS

Presented in this section are the methodology (Section 5.2.1, "Methodology") and results (Section 5.2.2, "Hazard Analysis Results") of the hazard analysis conducted for the Tank Waste Remediation System (TWRS) facilities and operations. Supplemental hazard analysis for the Waste Retrieval Sluicing System (WRSS) is contained in Addendum 1. Supplemental hazard analysis for the replacement cross-site transfer system is contained in Addendum 2. Supplemental hazard analysis for the 702-AZ ventilation system is contained in Addendum 3. The events considered in the hazard analysis are internal, external, and natural phenomena events that can affect the public, onsite workers, facility workers, or the environment through the uncontrolled release of radioactive or hazardous materials. Sabotage and terrorism are not included.

The hazard analysis addressed both inactive and active facilities. Inactive facilities were addressed as follows:

- Facilities classified as miscellaneous inactive storage facilities including inactive miscellaneous underground storage tanks and other inactive underground and aboveground storage facilities were analyzed.
- Interfaces with inactive facilities outside the scope of the TWRS BIO that had a physical connection to TWRS systems, including the inactive evaporators (242-S and 242-T), were analyzed.
- Inactive facilities within the scope of the TWRS BIO, including the 244-AR Vault, were analyzed.
- Abandoned or inactive portions of TWRS systems physically connected to active TWRS facilities were included in the analysis of the facility to which they were connected.

The results of the hazard analysis for inactive facilities were used with the results for active facilities to select candidate accidents for analysis and identify controls.

5.2.1 Methodology

The methodology used to perform the hazard analysis is presented in this section. The hazard analysis is a systematic and predominantly qualitative evaluation of the spectrum of risks to the public, onsite workers, facility workers, and the environment. Following is a discussion of the activities performed in the hazard analysis.

5.2.1.1 Hazard Identification. The hazard analysis includes identification of the hazards associated with each facility identified in the scope of this BIO. Hazards are defined as radioactive or hazardous material, referred to as material at risk (MAR), and as the energy sources that could contribute to the uncontrolled release of the MAR. The hazard identification methods and techniques include the following:

- Review of past TWRS safety documents
- Review of TWRS reportable event history (e.g., unusual occurrence reports)
- Review of historical records of similar operations (e.g., Savannah River Site)
- Participation by current and former TWRS operations and engineering personnel in the hazard analysis effort
- Use of standardized checklists of hazardous materials and energy sources to consider
- Review of TWRS facilities and operations descriptions
- Facility walkdowns
- Review of existing TWRS hazard analyses.

The hazard identification activity included a review of occurrence reports for TWRS (200 Area tank farms and affiliated facilities). These reports were examined to assure that a comprehensive set of hazards and potential accident causes were addressed by the hazard analysis activity. Comprehensiveness was assured by comparing the nature of the occurrences with potential causes or accidents identified by the hazard analysis and verifying that those occurrences not covered were not material to the hazard analysis results. Review of the occurrences also was used to assist in determining frequencies for some of the hazardous conditions in the TWRS hazard and operability study and preliminary hazards analysis.

5.2.1.2 Hazard Evaluation. The hazard evaluation is a structured and systematic examination using standard industry (AIChE, 1992, *Guidelines for Hazard Evaluation Procedures*) hazard evaluation techniques. The hazard evaluation team comprises cognizant TWRS operations and engineering personnel, safety analysts familiar with TWRS, and technical experts in specialty areas.

Hazard evaluations representative of all TWRS facilities are performed. Representative hazard evaluations are chosen on the basis of selection criteria designed to ensure comprehensive coverage of all TWRS facilities and their design and operation variations. Specific hazard evaluations are chosen to address the following:

- Material at risk
- Unique phenomenology (e.g., high heat, flammable gas, organics)

- Unique configuration variations (e.g., interface with the evaporators, active ventilation systems, passive ventilation systems, double-shell tanks, single-shell tanks)
- TWRS operations (e.g., waste transfers, in-tank activities, waste sampling)
- Unique facilities (e.g., 204-AR Waste Unloading Facility, 2727-W Sodium Storage Facility)
- Unique operations (e.g., Tank 241-C-106 WRSS as evaluated in Addendum 1).

The hazard evaluation technique selected for each representative hazard evaluation depends on the nature of the TWRS facility or operation being analyzed. The hazard evaluation techniques used are hazard and operability study, preliminary hazards analysis, and "What-If" analysis. These hazard evaluation techniques and where they were applied are discussed in Appendix D, "Hazard Analysis Results Report."

For each technique, the hazard evaluation identifies hazardous conditions (i.e., accidents) related to the facility, MAR, and energy sources. For each hazardous condition, the following information is developed:

- Hazardous condition description
- Cause
- Frequency
- Consequence.

The causes of hazardous conditions include internal events, external events, and natural phenomena events. Single and multiple failures (equipment and human errors) are considered as well as common cause failures. Both human errors of commission and omission (i.e., human reliability) are identified as potential causes or contributors to hazardous conditions.

The frequency assessments for the hazardous conditions are presented in occurrences per TWRS year and are assigned to a frequency category. A description of the frequency categories is provided in Table 5.2-1.

The consequence category assessments address potential impacts on the health and safety of the public and workers, and on the environment. A description of the consequence categories is provided in Table 5.2-2. The more severe consequence categories include the less severe consequence categories. For example, a hazardous condition assessed as having onsite consequences (S2) also is considered to have facility worker consequences (S1).

5.2.1.3 Accident Selection. The hazardous conditions identified by the hazard evaluation process are used to select representative accidents for more detailed quantitative analysis. The general selection criteria used are consistent with guidance in DOE-STD-3009-94, *Preparation Guide for*

U.S. Department of Energy Nonreactor Nuclear Facility Safety Analysis Reports: "The range of accident scenarios analyzed in a safety analysis report should be such that a complete set of bounding conditions to define the envelope of accident conditions to which the operation could be subjected are evaluated and documented."

The concept of selecting representative accidents from all the hazardous conditions identified is based on evaluating frequency and consequences for a representative accident, developing controls to mitigate or prevent the accident, and applying those controls to the entire set of accidents (i.e., hazardous conditions) covered by the representative accidents.

Representative accidents are selected on the basis of the following criteria: accidents that bound those of lesser but similar potential consequences; accidents that represent the highest risk; and accidents, although not necessarily bounding, that present some unique challenge to safety. The selection process comprises six steps.

1. **Initial Screening**—All hazardous conditions not assessed as S3 (offsite consequences) or S2 (onsite consequences) are dropped from the accident selection process. The S1 and S0 hazardous conditions are addressed on the basis of the qualitative hazard analysis results only.

2. **Assignment of Accident Release Attributes**—Each hazardous condition (i.e., accident) is described with accident release attributes related to uncontrolled release of the MAR. This process ensures that each release condition is represented by at least one accident.

   The release attributes for hazardous material are as follows:

   - Initial energy available to release the hazardous material
   - Initial release location
   - Initial form of the release.

   Initial conditions are used for these assignments because it is possible (and sometimes likely) that other conditions may evolve during the accident progression. For example, a release may begin as a pool of liquid on the ground and become airborne as wind blows over the pool. The progression of the accident is thoroughly examined in the accident analysis.

   The attributes related to energy level have three designations: high, moderate, and low. A high energy level (A) is assigned to energetic events such as explosions, fires, and criticality. A moderate energy level (B) is assigned to events such as liquid spray from pressurized lines, splash or airborne particles caused by hardware being dropped into a material, or airborne particles from a ventilation system that is breached when the fans are running. A low energy level (C) includes events such as leaks from nonpressurized liquid containers and releases from passive ventilation systems.

The attributes related to the initial release location have three designations: (1) atmospheric, (2) ground surface, and (3) subsurface. In some cases, the accident may result in release to more than one location. An accident resulting in significant portions of materials being released to more than one location is assigned the location attribute associated with the most severe consequence.

The attributes related to the initial form of the release have three designations: (a) vapor, gas, or aerosol; (b) liquid or slurry; and (c) solid or sludge. Again, in some cases, the accident may result in release of more than one form of material and thus be assigned the attribute associated with the most severe consequence.

3. **Creation of Accident Release Bins**—Once the release attributes are assigned to each hazardous condition (accident), accidents with common release attributes are collected to form accident release categories or bins.

4. **Sorting of Hazardous Conditions by Cause**—The hazardous conditions within each accident release bin are next grouped by cause. This includes grouping by common accident phenomena (e.g., fire, criticality). Examination of the various causes supports selection of a representative set of accidents from each release attribute bin.

5. **Selection of Representative Accidents from Each Accident Release Bin**—Within each accident release bin, the most severe accident in terms of consequence, and the highest risk accident (considering both frequency and consequences) are selected. One accident may represent both cases.

6. **Selection of Unique Accidents**—For each release attribute bin, if the accidents selected in step 5 do not represent each cause or important challenge to safety within the bin, additional accidents are selected. This process supports the development of controls for accidents with similar consequences, but different causes.

The results of this process are documented in Appendix D. The representative accidents selected by this process bound the consequences of all the hazardous conditions within their respective bins. The representative accidents are quantitatively analyzed in the accident analysis (Section 5.3).

5.2.1.4 Controls Identification. The hazard analysis results, together with the accident analysis results, are used to identify Safety-Class and Safety-Significant structures, systems, and components (SSCs), Technical Safety Requirements (TSRs), and other controls that provide Defense-in-Depth or environmental protection. Controls for protection of the public and onsite workers are based on the results of both the hazard analysis and the accident analysis. Additional controls required to protect the facility worker or the environment are based primarily on the qualitative hazard analysis.

The safety SSCs, TSRs, and other controls are identified by the following process.

1. For each analyzed representative accident, a necessary and sufficient set of controls is identified for protection of the public and onsite worker. This includes identifying any significant contributors to Defense-in-Depth.

2. A determination of whether the selected controls acceptably prevent or mitigate all the hazardous conditions represented by the analyzed representative accident at all the facilities where the hazardous conditions exist is made. If necessary, additional controls are identified for the hazardous conditions and facilities being evaluated.

3. All the controls chosen to protect the public and onsite worker are reviewed to determine whether any significant facility worker or environmental hazardous conditions remain uncontrolled. If necessary, additional controls are identified.

Details of the methodology and process for identification of controls are contained in Appendix D and Dunford 1996, *Tank Waste Remediation System Final Safety Analysis Report Selection of Safety Structures, Systems, and Components; and Technical Safety Requirements*. Criteria used for control decisions are presented in Section 5.4.1, "Control Decision Criteria."

5.2.2 Hazard Analysis Results

5.2.2.1 Hazard Identification. Results of the hazard identification activities are presented in the following sections. Supplemental hazard identification information for projects is contained in the designated addenda, as applicable. The results of the hazard identification for WRSS are contained in Addendum 1. The results of the hazard identification for the replacement cross-site transfer system are contained in Addendum 2. The results of the hazard identification for the 702-AZ ventilation system are contained in Addendum 3.

5.2.2.1.1 Material at Risk. TWRS facilities containing MAR are listed based on the facility description in Appendix B, "Facility and Process Description." The facilities evaluated are identified in Table 5.2-3. Facility-specific information on the MAR used during the hazard evaluations is documented in WHC-SD-WM-TI-759, *Hazard Evaluations for the Tank Waste Remediation System Final Safety Analysis Report*, and in Appendix D. Refer to Section 5.3 of this report for information on the MAR used for the accident analyses.

Hazardous materials were identified in TWRS that are not included in the MAR list. These materials, such as residual quantities of low-level wastes and laboratory quantities of chemicals, are controlled by standard practices (Section 5.2.2.2.2, "Facility Worker Protection").

5.2.2.1.2 Energy Sources. The next step in the hazard identification process is the identification of the energy sources that could contribute to the uncontrolled release of the MAR. The energy sources for TWRS facilities were identified using an energy source checklist. The checklist allowed documentation of the energy sources present at the facilities and the unique phenomena occurring in the tanks.

The checklist applied to TWRS facilities was developed from the Management Oversight Risk Tree list (DOE-76-45/4 SSDC-4, *MORT User's Manual*) with other energy sources included that were specific to the TWRS facilities being analyzed.

The energy source checklist analysis included the following unique phenomena occurring in the tanks:

- High heat
- Flammable gas (hydrogen, methane, ammonia)
- Organics.

The identified energy sources present at each facility are documented in WHC-SD-WM-HIE-007, *Tank Waste Remediation System FSAR Hazard Identification/Facility Configuration Verification Report*.

5.2.2.1.3 Natural Phenomena, External Events, and Common-Cause Hazards. Other hazards were identified during the hazard evaluation through "What-If" analyses. The three types of hazards analyzed were natural phenomena, external events, and common cause.

Natural phenomena events are those events caused by weather and geological events that could affect one or more facilities or locations resulting in potentially hazardous conditions. For this "What-If" analysis, a list of potential natural phenomena was developed, the frequency of the event was estimated, and the resulting consequences were determined qualitatively.

External events are those potential initiators of hazardous conditions that come from outside the facility or operation. For this "What-If" analysis, a list of external events was developed, the frequency of the event was estimated, and the resulting consequences determined qualitatively.

A common cause is an initiator with potential impacts on more than one location. For this "What-If" evaluation, a list of potential common-cause events was developed, the frequency of the event was estimated, and the resulting consequences were determined qualitatively.

The natural phenomena, external events, and common-cause hazardous conditions that were analyzed during the "What-If" analyses are identified in Table 5.2-4.

5.2.2.2 Hazard Evaluation. The results of the TWRS hazard evaluations are documented in WHC-SD-WM-TI-759. Supplemental hazard evaluations for projects are included in the designated addenda, as applicable. Hazard evaluations for WRSS are contained in Addendum 1. Hazard evaluations for the replacement

cross-site transfer system are contained in Addendum 2. Hazard evaluations for the 702-AZ ventilation system is contained in Addendum 3. Each hazard evaluation was assigned a hazard evaluation identifier. For each facility, the applicable hazard evaluation identifier is included in Table 5.2-3. The hazard evaluation activity determined a set of hazardous conditions and their causes that could result in the uncontrolled release of hazardous material.

The identification of causes was based on the hazard identification results, reviews of the systems, historical event data, and other sources (e.g., existing safety documentation) including discussions with experienced facility personnel. Typical causes of the postulated hazardous conditions include equipment failures, operational errors, abnormal operating conditions, and environmental conditions. The causes of a postulated hazardous condition were identified to support a qualitative frequency evaluation.

Each hazardous condition was assigned a hazardous condition identification number. The alpha-numeric identifier for each hazardous condition permits tracing the condition to the specific item in the applicable hazard and operability study, preliminary hazard analysis, or what-if evaluation. The description of each hazardous event, its cause, frequency category, consequence category, and hazardous condition and identification number (ID) are included in Appendix D.

5.2.2.2.1 Accident Selection. Representative accidents were selected using the methodology described in Section 5.2.1.3, "Accident Selection." The representative accidents that bound the consequences of all S2 (onsite) and S3 (offsite) hazardous conditions are listed in Table 5.2-5 along with the corresponding section in this BIO that contains the quantitative accident analysis results. The complete process is documented in Appendix D. Section 5.3 contains the methodology and results of the analysis of the representative accidents listed in Table 5.2-5.

5.2.2.2.2 Facility Worker Protection. The TWRS hazard analysis process identified potential hazardous conditions that would effect the facility worker. These hazardous conditions are divided into three categories: uncontrolled releases of radioactive or hazardous material, operational radiation and hazardous material protection concerns, and occupational safety concerns.

Protection Against Uncontrolled Releases—Anticipated hazardous conditions affecting the facility worker were reviewed to determine if the safety SSC and TSR controls developed for the analyzed accidents applied to these hazardous conditions. If the safety SSCs and TSRs did not sufficiently control the hazard, the hazardous conditions were reviewed to determine if a potential existed for serious injury or death to the facility worker. For those hazardous conditions, Safety-Significant SSCs and TSRs were identified.

The list of anticipated hazardous conditions affecting the facility worker and the safety SSCs and TSRs applicable to each hazardous condition is given in Section 5.4.

Operational Radiological and Hazardous Material Protection—A number of potential facility worker radiological and hazardous material exposure concerns expected during operation were identified in the hazard evaluation.

Although identification of potential facility worker radiation exposure and hazardous material concerns was not the specific focus of the hazard evaluations, the exposure concerns were recorded in Appendix D and have been sent to the Radiation Protection Program and Hazardous Material Protection Program to ensure that appropriate safeguards are in place to mitigate or prevent the event. The Radiation Protection Program and Hazardous Material Protection Program are summarized in Chapter 4.0, "Safety Management" of this chapter.

Occupational Safety—The hazard evaluation identified a number of potential facility worker occupational safety concerns. Although identification of potential facility worker occupational safety concerns was not the specific focus of the hazard evaluations, the exposure concerns were recorded in Appendix D and have been sent to the Industrial Health and Safety Program to ensure that appropriate safeguards are in place to mitigate or prevent the event.

5.2.2.2.3 Environmental Protection. The hazard analysis identified hazardous conditions with significant environmental (E3 or E2) consequences. For most of these hazardous conditions, the controls identified to protect the public, onsite worker, and facility worker also provide for protection of the environment. A listing of the hazardous conditions with significant environmental consequences (E3 and E2) and applicable safety SSCs and TSRs is provided in Section 5.4. Additional controls required specifically to provide protection for the environment are also discussed in Section 5.4.

5.2.3 References

AIChE, 1992, *Guidelines for Hazard Evaluation Procedures, 2nd Edition*, American Institute of Chemical Engineers, New York, New York.

DOE-76-45/4 SSDC-4, 1992, *MORT User's Manual*, Rev. 3, U.S. Department of Energy, Washington D.C.

DOE-STD-3009-94, 1994, *Preparation Guide for U.S. Department of Energy Nonreactor Nuclear Facility Safety Analysis Reports*, U.S. Department of Energy, Washington, D.C.

Dunford, G. L., 1996, *Tank Waste Remediation System Final Safety Analysis Report Selection of Safety Structures, Systems, and Components; and Technical Safety Requirements* (external letter 9654131, to M. L. Cowen, Westinghouse Savannah River Company, September 13), Westinghouse Hanford Company, Richland, Washington.

WHC-SD-WM-HIE-007, 1996, *Tank Waste Remediation System FSAR Hazard Identification/Facility Configuration Verification Report*, Rev. 0, Westinghouse Hanford Company, Richland, Washington.

WHC-SD-WM-TI-759, 1996, *Hazard Evaluations for the Tank Waste Remediation System Final Safety Analysis Report*, Rev. 0, Westinghouse Hanford Company, Richland, Washington.

This page intentionally left blank.

Table 5.2-1. Frequency Categories for Tank Waste Remediation System Facilities.

F3 ($>10^{-2}$)	**Anticipated events:** Frequency greater than once in 100 operating years
F2 (10^{-4} to 10^{-2})	**Unlikely:** Frequency between once in 10,000 years and once in 100 operating years
F1 (10^{-6} to 10^{-4})	**Extremely unlikely:** Frequency between once in 1 million years and once in 10,000 operating years
F0 ($<10^{-6}$)	**Beyond extremely unlikely:** Frequency of less than once in a million operating years

Table 5.2-2. Consequence Categories for Tank Waste Remediation System Facilities.

Category	Definition
S3	Significant radiological or chemical exposure to the public
S2	Significant radiological or chemical exposure to onsite worker
S1	Significant radiation or chemical exposure to facility worker
S0	No significant effect outside facility systems. No consequences for facility workers, onsite workers, or public
E3	Offsite discharge or discharge to groundwater
E2	Significant discharge onsite
E1	Localized discharge of hazardous material
E0	No significant environmental consequence

Table 5.2-3. Applicable Hazard Evaluations for Tank Waste Remediation System Facilities. (30 sheets)

Table Key		
Facility/topic	**Hazard Evaluation Technique**	**Hazard Evaluation Identifier**
Facility interfaces - 222-S Laboratory, 242-A Evaporator, 242-S Evaporator, 242-T Evaporator, B Plant, T Plant, U Plant, Plutonium Uranium Extraction (PUREX), Plutonium Finishing Plant (PFP)	HAZOP (Hazard and Operability Study)	I-222S, I-242A, I-242S, I-242T, I-BPLANT, I-TPLANT, I-UPLANT, I-PUREX, I-PFP
204-AR Transfer Facility	HazOp	204AR
244-AR Vault	HazOp	244AR
Overground transfers	HazOp	OGT
Tank 241-C-106	HazOp	106C
Tank 241-AN-107	HazOp	107AN
Tank 241-AW-102	HazOp	102AW
Tank 241-S-102	HazOp	102S
Tank 241-SX-114	HazOp	114SX
Cross-site (XS) transfer (Tank 241-SY-102) (selected portions of Project W-058)	HazOp	XS, W058
209-E Storage Area (includes less than 90-Day Storage Pad)	PHA (Preliminary Hazard Analysis)	90D
213 Compactor	PHA	213W
244-AR Vault	PHA	244AR-PH
2727-W Building	PHA	2727W
Cleanout boxes	PHA	COB
Cone Penetrometer[1]	PHA	CP
Cribs, ditches, and ponds	PHA	CDP
Light Duty Utility Arm[1]	PHA	LDUA
MISF - Inactive miscellaneous underground storage tank (plus other inactive facilities)	PHA	Identifier ends in - I, e.g., CRN-05-I
Siphoning	PHA	TSF*
Tank operations (Tank 241-AZ-102)	PHA	BND, CVR, CRN, DCN, FR, GRN, ITK, RAD, RSR, SFF, VEH*
Tank operations (Tank 241-BX-109)	PHA	BND, CVR, CRN, DCN, FR, GRN, ITK, RAD, RSR, SFF, VEH*
Tank operations (Tank 241-SY-101)	PHA	BND, CVR, CRN, DCN, FR, GRN, ITK, RAD, RSR, SFF, VEH*
Vertical storage units	PHA	VSU
Common cause failure	"What If" (What If Analysis)	CCF
External events	"What If"	EE
Natural phenomena	"What If"	NP

*Abbreviation List for Tank Farm Activities:

BND - Bonding
CDP - Cribs, ditches, and ponds
CVR - Cover Block Installation and Removal
CRN - Crane Operations
DCN - Decontamination
FR - Flex Receivers
GRN - Greenhouse or Confinement Construction and Removal
ITK - In-Tank Equipment Installation, Operation and Removal
RAD - Radiological Monitoring and Surveys
RSR - Riser Access (and possible asbestos removal)
SFF - Sniffing (gas monitoring)
TSF - Tank Farm Waste Transfer Syphoning Events
VEH - Vehicle Operations

The above key relates the type of representative analysis performed to the TWRS facilities listed below.

Table 5.2-3. Applicable Hazard Evaluations for Tank Waste Remediation System Facilities. (30 sheets)

Facility Name	Facility Type	Applicable Hazard Evaluation	Hazard Evaluation Identifier
241-A TANK FARM			
216-A-08C	Crib	PHA: CDP	CDP
216-A-08S	Sample pit	HAZOP: AW-102, SY-102	102AW, XS
216-A-28	Crib	PHA: CDP	CDP
216-A-30	Crib	PHA: CDP	CDP
216-A-36A	Crib	PHA: CDP	CDP
216-A-36B	Crib	PHA: CDP	CDP
216-A-37-1	Crib	PHA: CDP	CDP
216-A-37-2	Crib	PHA: CDP	CDP
216-A-39	Crib	PHA: CDP	CDP
216-A-45	Crib	PHA: CDP	CDP
241-A-A	Valve pit	HAZOP: 222-S, 242-A, 242-S, 242-T, AW-102, C-106, S-102, SX-114, SY-102, B Plant, T Plant, U Plant, PFP, PUREX, Overground Transfers PHA: AZ-102/BX-109/SY-101	I-222S, I-242A, I-242S, I-242T, 102AW, 106C, 102S, 114SX, W058, XS, I-BPLANT, I-UPLANT, I-TPLANT, I-PFP, I-PUREX, OGT, CVR
241-A-B	Valve pit	HAZOP: 222-S, 242-A, 242-S, 242-T, AW-102, C-106, S-102, SX-114, SY-102, B Plant, T Plant, U Plant, PFP, PUREX, Overground Transfers PHA: AZ-102/BX-109/SY-101	I-222S, I-242A, I-242S, I-242T, 102AW, 106C, 102S, 114SX, W058, XS, I-BPLANT, I-UPLANT, I-TPLANT, I-PFP, I-PUREX, OGT, CVR
241-A-C08	Cleanout box	PHA: C08	C08
241-A-101	Single-shell tank, flammable gas, organics	HAZOP: AW-102, C-106, S-102, SX-114, SY-102, 242-T, Overground Transfers PHA: AZ-102/BX-109/SY-101/ITK WHAT IF: CCF, EE	102AW, 106C, 102S, 114SX, XS, BND, CRN, ITK, RAD, VEH, EE, CCF,I-242T,OGT
241-A-102	Single-shell tank	HAZOP: AW-102, C-106, S-102, SX-114, SY-102, 242-T, Overground Transfers PHA: AZ-102/BX-109/SY-101/ITK WHAT IF: CCF, EE	102AW, 106C, 102S, 114SX, XS, BND, CRN, ITK, RAD, VEH, EE, CCF,I-242T,OGT
241-A-103	Single-shell tank	HAZOP: AW-102, C-106, S-102, SX-114, SY-102, 242-T, Overground Transfers PHA: AZ-102/BX-109/SY-101/ITK WHAT IF: CCF, EE	102AW, 106C, 102S, 114SX, XS, BND, CRN, ITK, RAD, VEH, EE, CCF,I-242T,OGT
241-A-104	Single-shell tank, high heat load	HAZOP: AW-102, C-106, S-102, SX-114, SY-102, 242-T, Overground Transfers PHA: AZ-102/BX-109/SY-101/ITK WHAT IF: CCF, EE	102AW, 106C, 102S, 114SX, XS, BND, CRN, ITK, RAD, VEH, EE, CCF,I-242T,OGT
241-A-105	Single-shell tank, high heat load	HAZOP: AW-102, C-106, S-102, SX-114, SY-102, 242-T, Overground Transfers PHA: AZ-102/BX-109/SY-101/ITK WHAT IF: CCF, EE	102AW, 106C, 102S, 114SX, XS, BND, CRN, ITK, RAD, VEH, EE, CCF,I-242T,OGT
241-A-106	Single-shell tank, high heat load	HAZOP: AW-102, C-106, S-102, SX-114, SY-102, 242-T, Overground Transfers PHA: AZ-102/BX-109/SY-101/ITK WHAT IF: CCF, EE	102AW, 106C, 102S, 114SX, XS, BND, CRN, ITK, RAD, VEH, EE, CCF,I-242T,OGT

Table 5.2-3. Applicable Hazard Evaluations for Tank Waste Remediation System Facilities. (30 sheets)

241-A-151	Diversion box	HAZOP: 222-S, 242-A, 242-S, 242-T, AW-102, C-106, S-102, SX-114, SY-102, B Plant, T Plant, U Plant, PFP, PUREX, Overground Transfers PHA: AZ-102/BX-109/SY-101	I-222S, I-242A, I-242S, I-242T, 102AW, 106C, 102S, 114SX, W058, XS, I-BPLANT, I-UPLANT, I-TPLANT, I-PFP, I-PUREX, OGT, CVR
241-A-152	Diversion box	HAZOP: 222-S, 242-A, 242-S, 242-T, AW-102, C-106, S-102, SX-114, SY-102, B Plant, T Plant, U Plant, PFP, PUREX, Overground Transfers PHA: AZ-102/BX-109/SY-101	I-222S, I-242A, I-242S, I-242T, 102AW, 106C, 102S, 114SX, W058, XS, I-BPLANT, I-UPLANT, I-TPLANT, I-PFP, I-PUREX, OGT, CVR
241-A-302-A	Catch tank	HAZOP: AW-102, C-106, S-102, SX-114, SY-102, PUREX PHA: AZ-102/BX-109/SY-101 WHAT IF: CCF, EE	102AW, 106C, 102S, 114SX, XS, BND, CRN, ITK, RAD, VEH, EE, CCF, I-PUREX
241-A-350	DCRT Catch tank	HAZOP: AW-102, C-106, S-102, SX-114, SY-102,222-S, 242-S, PFP, PUREX, T Plant, Siphoning, Overground Transfers PHA: AZ-102/BX-109/SY-101 WHAT IF: CCF, EE	102AW, 106C, 102S, 114SX, XS, BND, CRN, ITK, RAD, VEH, EE, CCF, I-222S, I-242S, I-PFP, I-PUREX, I-TPLANT, TSF, OGT
241-A-417	Catch tank	HAZOP: AW-102, C-106, S-102, SX-114, SY-102,PUREX PHA: AZ-102/BX-109/SY-101 WHAT IF: CCF, EE	102AW, 106C, 102S, 114SX, XS, BND, CRN, ITK, RAD, VEH, EE, CCF, I-PUREX
		241-AN TANK FARM	
241-AN-A	Valve pit	HAZOP: 222-S, 242-A, 242-S, 242-T, AW-102, C-106, S-102, SX-114, SY-102, B Plant, T Plant, U Plant, PFP, PUREX, Overground Transfers PHA: AZ-102/BX-109/SY-101	I-222S, I-242A, I-242S, I-242T, 102AW, 106C, 102S, 114SX, W058, XS, I-BPLANT, I-UPLANT, I-TPLANT, I-PFP, I-PUREX, OGT, CVR
241-AN-B	Valve pit	HAZOP: 222-S, 242-A, 242-S, 242-T, AW-102, C-106, S-102, SX-114, SY-102, B Plant, T Plant, U Plant, PFP, PUREX, Overground Transfers PHA: AZ-102/BX-109/SY-101	I-222S, I-242A, I-242S, I-242T, 102AW, 106C, 102S, 114SX, W058, XS, I-BPLANT, I-UPLANT, I-TPLANT, I-PFP, I-PUREX, OGT, CVR
241-AN-C08-1	Cleanout box	PHA: C08	C08
241-AN-C08-2	Cleanout box	PHA: C08	C08
241-AN-C08-3	Cleanout box	PHA: C08	C08
241-AN-C08-4	Cleanout box	PHA: C08	C08
241-AN-C08-5	Cleanout box	PHA: C08	C08
241-AN-C08-6	Cleanout box	PHA: C08	C08
241-AN-C08-7	Cleanout box	PHA: C08	C08
241-AN-C08-8	Cleanout box	PHA: C08	C08
241-AN-101	Double-shell tank, flammable gas, active ventilation	HAZOP: AW-102, C-106, S-102, SX-114, SY-102,222-S, 242-A, 242-S, AW-102, PFP, PUREX, B Plant, T Plant PHA: AZ-102/BX-109/SY-101/ITK WHAT IF: CCF, EE	102AW, 106C, 102S, 114SX, XS, BND, CRN, ITK, RAD, VEH, EE, CCF,I-222S, I-242A, I-242S, 102AW, I-PFP, I-PUREX, I-BPLANT, I-TPLANT
241-AN-102	Double-shell tank, active ventilation	HAZOP: AW-102, C-106, S-102, SX-114, SY-102,222-S, 242-A, 242-S, AW-102, PFP, PUREX, B Plant, T Plant PHA: AZ-102/BX-109/SY-101/ITK WHAT IF: CCF, EE	102AW, 106C, 102S, 114SX, XS, BND, CRN, ITK, RAD, VEH, EE, CCF,I-222S, I-242A, I-242S, 102AW, I-PFP, I-PUREX, I-BPLANT, I-TPLANT

Table 5.2-3. Applicable Hazard Evaluations for Tank Waste Remediation System Facilities. (30 sheets)

241-AN-101	Double-shell tank, flammable gas, active ventilation	HAZOP: AW-102, C-106, S-102, SX-114, SY-102,222-S, 242-A, 242-S, AW-102, PFP, PUREX, B Plant, T Plant PHA: AZ-102/BX-109/SY-101/ITK WHAT IF: CCF, EE	102AW, 106C, 102S, 114SX, XS, BND, CRN, ITK, RAD, VEH, EE, CCF,I-222S, I-242A, I-242S, 102AW, I-PFP, I-PUREX, I-BPLANT, I-TPLANT
241-AN-102	Double-shell tank, active ventilation	HAZOP: AW-102, C-106, S-102, SX-114, SY-102,222-S, 242-A, 242-S, AW-102, PFP, PUREX, B Plant, T Plant PHA: AZ-102/BX-109/SY-101/ITK WHAT IF: CCF, EE	102AW, 106C, 102S, 114SX, XS, BND, CRN, ITK, RAD, VEH, EE, CCF,I-222S, I-242A, I-242S, 102AW, I-PFP, I-PUREX, I-BPLANT, I-TPLANT
241-AN-103	Double-shell tank, flammable gas, active ventilation	HAZOP: AW-102, C-106, S-102, SX-114, SY-102,222-S, 242-A, 242-S, AW-102, PFP, PUREX, B Plant, T Plant PHA: AZ-102/BX-109/SY-101/ITK WHAT IF: CCF, EE	102AW, 106C, 102S, 114SX, XS, BND, CRN, ITK, RAD, VEH, EE, CCF,I-222S, I-242A, I-242S, 102AW, I-PFP, I-PUREX, I-BPLANT, I-TPLANT
241-AN-104	Double-shell tank, flammable gas, active ventilation	HAZOP: AW-102, C-106, S-102, SX-114, SY-102,222-S, 242-A, 242-S, AW-102, PFP, PUREX, B Plant, T Plant PHA: AZ-102/BX-109/SY-101/ITK WHAT IF: CCF, EE	102AW, 106C, 102S, 114SX, XS, BND, CRN, ITK, RAD, VEH, EE, CCF,I-222S, I-242A, I-242S, 102AW, I-PFP, I-PUREX, I-B PLANT, I-TPLANT
241-AN-105	Double-shell tank, flammable gas, active ventilation	HAZOP: AW-102, C-106, S-102, SX-114, SY-102,222-S, 242-A, 242-S, AW-102, PFP, PUREX, B Plant, T Plant PHA: AZ-102/BX-109/SY-101/ITK WHAT IF: CCF, EE	102AW, 106C, 102S, 114SX, XS, BND, CRN, ITK, RAD, VEH, EE, CCF,I-222S, I-242A, I-242S, 102AW, I-PFP, I-PUREX, I-BPLANT, I-TPLANT
241-AN-106	Double-shell tank, active ventilation	HAZOP: AW-102, C-106, S-102, SX-114, SY-102,222-S, 242-A, 242-S, AW-102, PFP, PUREX, B Plant, T Plant PHA: AZ-102/BX-109/SY-101/ITK WHAT IF: CCF, EE	102AW, 106C, 102S, 114SX, XS, BND, CRN, ITK, RAD, VEH, EE, CCF,I-222S, I-242A, I-242S, 102AW, I-PFP, I-PUREX, I-BPLANT, I-TPLANT
241-AN-107	Double-shell tank, air lift circulators, caustic, active transfer/mixer pumps, active ventilation	HAZOP: AN-107, AW-102, C-106, S-102, SX-114, SY-102,222-S, 242-A, 242-S, AW-102, PFP, PUREX, B Plant, T Plant PHA: AZ-102/BX-109/SY-101/ITK WHAT IF: CCF, EE	107AN, 102AW, 106C, 102S, 114SX, XS, BND, CRN, ITK, RAD, VEH, EE, CCF,I-222S, I-242A, I-242S, 102AW, I-PFP, I-PUREX, I-BPLANT, I-TPLANT
241-AP TANK FARM			
241-AP-A	Valve pit	HAZOP: 222-S, 242-A, 242-S, 242-T, AW-102, C-106, S-102, SX-114, SY-102, B Plant, T Plant, U Plant, PFP, PUREX, Overground Transfers PHA: AZ-102/BX-109/SY-101	I-222S, I-242A, I-242S, I-242T, 102AW, 106C, 102S, 114SX, W058, XS, I-BPLANT, I-UPLANT, I-TPLANT, I-PFP, I-PUREX, OGT, CVR
241-AP-101	Double-shell tank, active ventilation	HAZOP: AW-102, C-106, S-102, SX-114, SY-102,222-S, 242-A, 242-S, AW-102, PFP, PUREX, B Plant, T Plant PHA: AZ-102/BX-109/SY-101/ITK WHAT IF: CCF, EE	102AW, 106C, 102S, 114SX, XS, BND, CRN, ITK, RAD, VEH, EE, CCF,I-222S, I-242A, I-242S, 102AW, I-PFP, I-PUREX, I-BPLANT, I-TPLANT
241-AP-102	Double-shell tank, active ventilation	HAZOP: AW-102, C-106, S-102, SX-114, SY-102,222-S, 242-A, 242-S, AW-102, PFP, PUREX, B Plant, T Plant PHA: AZ-102/BX-109/SY-101/ITK WHAT IF: CCF, EE	102AW, 106C, 102S, 114SX, XS, BND, CRN, ITK, RAD, VEH, EE, CCF,I-222S, I-242A, I-242S, 102AW, I-PFP, I-PUREX, I-BPLANT, I-TPLANT

Table 5.2-3. Applicable Hazard Evaluations for Tank Waste Remediation System Facilities. (30 sheets)

241-AP-103	Double-shell tank, active ventilation	HAZOP: AW-102, C-106, S-102, SX-114, SY-102,222-S, 242-A, 242-S, AW-102, PFP, PUREX, B Plant, T Plant PHA: AZ-102/BX-109/SY-101/ITK WHAT IF: CCF, EE	102AW, 106C, 102S, 114SX, XS, BND, CRN, ITK, RAD, VEH, EE, CCF,I-222S, I-242A, I-242S, 102AW, I-PFP, I-PUREX, I-BPLANT, I-TPLANT
241-AP-104	Double-shell tank, active ventilation	HAZOP: AW-102, C-106, S-102, SX-114, SY-102,222-S, 242-A, 242-S, AW-102, PFP, PUREX, B Plant, T Plant PHA: AZ-102/BX-109/SY-101/ITK WHAT IF: CCF, EE	102AW, 106C, 102S, 114SX, XS, BND, CRN, ITK, RAD, VEH, EE, CCF,I-222S, I-242A, I-242S, 102AW, I-PFP, I-PUREX, I-BPLANT, I-TPLANT
241-AP-105	Double-shell tank, active ventilation	HAZOP: AW-102, C-106, S-102, SX-114, SY-102,222-S, 242-A, 242-S, AW-102, PFP, PUREX, B Plant, T Plant PHA: AZ-102/BX-109/SY-101/ITK WHAT IF: CCF, EE	102AW, 106C, 102S, 114SX, XS, BND, CRN, ITK, RAD, VEH, EE, CCF,I-222S, I-242A, I-242S, 102AW, I-PFP, I-PUREX, I-BPLANT, I-TPLANT
241-AP-106	Double-shell tank, active ventilation	HAZOP: AW-102, C-106, S-102, SX-114, SY-102,222-S, 242-A, 242-S, AW-102, PFP, PUREX, B Plant, T Plant PHA: AZ-102/BX-109/SY-101/ITK WHAT IF: CCF, EE	102AW, 106C, 102S, 114SX, XS, BND, CRN, ITK, RAD, VEH, EE, CCF,I-222S, I-242A, I-242S, 102AW, I-PFP, I-PUREX, I-BPLANT, I-TPLANT
241-AP-107	Double-shell tank, active ventilation	HAZOP: AW-102, C-106, S-102, SX-114, SY-102,222-S, 242-A, 242-S, AW-102, PFP, PUREX, B Plant, T Plant PHA: AZ-102/BX-109/SY-101/ITK WHAT IF: CCF, EE	102AW, 106C, 102S, 114SX, XS, BND, CRN, ITK, RAD, VEH, EE, CCF,I-222S, I-242A, I-242S, 102AW, I-PFP, I-PUREX, I-BPLANT, I-TPLANT
241-AP-108	Double-shell tank, active ventilation	HAZOP: AW-102, C-106, S-102, SX-114, SY-102,222-S, 242-A, 242-S, AW-102, PFP, PUREX, B Plant, T Plant PHA: AZ-102/BX-109/SY-101/ITK WHAT IF: CCF, EE	102AW, 106C, 102S, 114SX, XS, BND, CRN, ITK, RAD, VEH, EE, CCF,I-222S, I-242A, I-242S, 102AW, I-PFP, I-PUREX, I-BPLANT, I-TPLANT
241-AW TANK FARM			
241-AW-A	Valve pit	HAZOP: 222-S, 242-A, 242-S, 242-T, AW-102, C-106, S-102, SX-114, SY-102, B Plant, T Plant, U Plant, PFP, PUREX, Overground Transfers PHA: AZ-102/BX-109/SY-101	I-222S, I-242A, I-242S, I-242T, 102AW, 106C, 102S, 114SX, W058, XS, I-BPLANT, I-UPLANT, I-TPLANT, I-PFP, I-PUREX, OGT, CVR
241-AW-B	Valve pit	HAZOP: 222-S, 242-A, 242-S, 242-T, AW-102, C-106, S-102, SX-114, SY-102, B Plant, T Plant, U Plant, PFP, PUREX, Overground Transfers PHA: AZ-102/BX-109/SY-101	I-222S, I-242A, I-242S, I-242T, 102AW, 106C, 102S, 114SX, W058, XS, I-BPLANT, I-UPLANT, I-TPLANT, I-PFP, I-PUREX, OGT, CVR
241-AW-COB-01	Cleanout box	PHA: COB	COB
241-AW-COB-02	Cleanout box	PHA: COB	COB
241-AW-COB-03	Cleanout box	PHA: COB	COB
241-AW-COB-04	Cleanout box	PHA: COB	COB
241-AW-COB-05	Cleanout box	PHA: COB	COB
241-AW-COB-06	Cleanout box	PHA: COB	COB
241-AW-COB-07	Cleanout box	PHA: COB	COB
241-AW-COB-08	Cleanout box	PHA: COB	COB
241-AW-COB-09	Cleanout box	PHA: COB	COB
241-AW-COB-10	Cleanout box	PHA: COB	COB
241-AW-COB-11	Cleanout box	PHA: COB	COB

Table 5.2-3. Applicable Hazard Evaluations for Tank Waste Remediation System Facilities. (30 sheets)

241-AW-COB-12	Cleanout box	PHA: COB	COB
241-AW-101	Double-shell tank, flammable gas, active ventilation	HAZOP: AW-102, C-106, S-102, SX-114, SY-102,222-S, 242-A, 242-S, AW-102, PFP, PUREX, B Plant, T Plant PHA: AZ-102/BX-109/SY-101/ITK WHAT IF: CCF, EE	102AW, 106C, 102S, 114SX, XS, BND, CRN, ITK, RAD, VEH, EE, CCF,I-222S, I-242A, I-242S, 102AW, I-PFP, I-PUREX, I-BPLANT, I-TPLANT
241-AW-102	Double-shell tank, air lift circulators, evaporator feed, active transfer/mixer pumps, active ventilation	HAZOP: AW-102, C-106, S-102, SX-114, SY-102,222-S, 242-A, 242-S, AW-102, PFP, PUREX, B Plant, T Plant PHA: AZ-102/BX-109/SY-101/ITK WHAT IF: CCF, EE	102AW, 106C, 102S, 114SX, XS, BND, CRN, ITK, RAD, VEH, EE, CCF,I-222S, I-242A, I-242S, 102AW, I-PFP, I-PUREX, I-BPLANT, I-TPLANT
241-AW-103	Double-shell tank, active ventilation	HAZOP: AW-102, C-106, S-102, SX-114, SY-102,222-S, 242-A, 242-S, AW-102, PFP, PUREX, B Plant, T Plant PHA: AZ-102/BX-109/SY-101/ITK WHAT IF: CCF, EE	102AW, 106C, 102S, 114SX, XS, BND, CRN, ITK, RAD, VEH, EE, CCF,I-222S, I-242A, I-242S, 102AW, I-PFP, I-PUREX, I-BPLANT, I-TPLANT
241-AW-104	Double-shell tank, active ventilation	HAZOP: AW-102, C-106, S-102, SX-114, SY-102,222-S, 242-A, 242-S, AW-102, PFP, PUREX, B Plant, T Plant PHA: AZ-102/BX-109/SY-101/ITK WHAT IF: CCF, EE	102AW, 106C, 102S, 114SX, XS, BND, CRN, ITK, RAD, VEH, EE, CCF,I-222S, I-242A, I-242S, 102AW, I-PFP, I-PUREX, I-BPLANT, I-TPLANT
241-AW-105	Double-shell tank, active ventilation	HAZOP: AW-102, C-106, S-102, SX-114, SY-102,222-S, 242-A, 242-S, AW-102, PFP, PUREX, B Plant, T Plant PHA: AZ-102/BX-109/SY-101/ITK WHAT IF: CCF, EE	102AW, 106C, 102S, 114SX, XS, BND, CRN, ITK, RAD, VEH, EE, CCF,I-222S, I-242A, I-242S, 102AW, I-PFP, I-PUREX, I-BPLANT, I-TPLANT
241-AW-106	Double-shell tank, active ventilation	HAZOP: AW-102, C-106, S-102, SX-114, SY-102,222-S, 242-A, 242-S, AW-102, PFP, PUREX, B Plant, T Plant PHA: AZ-102/BX-109/SY-101/ITK WHAT IF: CCF, EE	102AW, 106C, 102S, 114SX, XS, BND, CRN, ITK, RAD, VEH, EE, CCF,I-222S, I-242A, I-242S, 102AW, I-PFP, I-PUREX, I-BPLANT, I-TPLANT
241-AX TANK FARM			
241-AX-A	Valve pit	HAZOP: 222-S, 242-A, 242-S, 242-T, AW-102, C-106, S-102, SX-114, SY-102, B Plant, T Plant, U Plant, PFP, PUREX, Overground Transfers PHA: AZ-102/BX-109/SY-101	I-222S, I-242A, I-242S, I-242T, 102AW, 106C, 102S, 114SX, W058, XS, I-BPLANT, I-UPLANT, I-TPLANT, I-PFP, I-PUREX, OGT, CVR
241-AX-B	Valve pit	HAZOP: 222-S, 242-A, 242-S, 242-T, AW-102, C-106, S-102, SX-114, SY-102, B Plant, T Plant, U Plant, PFP, PUREX, Overground Transfers PHA: AZ-102/BX-109/SY-101	I-222S, I-242A, I-242S, I-242T, 102AW, 106C, 102S, 114SX, W058, XS, I-BPLANT, I-UPLANT, I-TPLANT, I-PFP, I-PUREX, OGT, CVR
241-AX-COB	Cleanout box	PHA: COB	COB
241-AX-101	Single-shell tank, flammable gas	HAZOP: AW-102, C-106, S-102, SX-114, SY-102, 242-T, Overground Transfers PHA: AZ-102/BX-109/SY-101/ITK WHAT IF: CCF, EE	102AW, 106C, 102S, 114SX, XS, BND, CRN, ITK, RAD, VEH, EE, CCF,I-242T,OGT
241-AX-102	Single-shell tank, flammable gas, organics	HAZOP: AW-102, C-106, S-102, SX-114, SY-102, 242-T, Overground Transfers PHA: AZ-102/BX-109/SY-101/ITK WHAT IF: CCF, EE	102AW, 106C, 102S, 114SX, XS, BND, CRN, ITK, RAD, VEH, EE, CCF,I-242T,OGT

Table 5.2-3. Applicable Hazard Evaluations for Tank Waste Remediation System Facilities. (30 sheets)

241-AX-103	Single-shell tank, flammable gas	HAZOP: AW-102, C-106, S-102, SX-114, SY-102, 242-T, Overground Transfers PHA: AZ-102/BX-109/SY-101/ITK WHAT IF: CCF, EE	102AW, 106C, 102S, 114SX, XS, BND, CRN, ITK, RAD, VEH, EE, CCF,I-242T,OGT
241-AX-104	Single-shell tank	HAZOP: AW-102, C-106, S-102, SX-114, SY-102, 242-T, Overground Transfers PHA: AZ-102/BX-109/SY-101/ITK WHAT IF: CCF, EE	102AW, 106C, 102S, 114SX, XS, BND, CRN, ITK, RAD, VEH, EE, CCF,I-242T,OGT
241-AX-151	Diversion box	HAZOP: 222-S, 242-A, 242-S, 242-T, AW-102, C-106, S-102, SX-114, SY-102, B Plant, T Plant, U Plant, PFP, PUREX, Overground Transfers PHA: AZ-102/BX-109/SY-101	I-222S, I-242A, I-242S, I-242T, 102AW, 106C, 102S, 114SX, W058, XS, I-BPLANT, I-UPLANT, I-TPLANT, I-PFP, I-PUREX, OGT, CVR
241-AX-152	Diverter station	HAZOP: 222-S, 242-A, 242-S, 242-T, AW-102, C-106, S-102, SX-114, SY-102, B Plant, T Plant, U Plant, PFP, PUREX, Overground Transfers PHA: AZ-102/BX-109/SY-101 WHAT IF: CCF, EE	I-222S, I-242A, I-242S, I-242T, 102AW, 106C, 102S, 114SX, W058, XS, I-BPLANT, I-UPLANT, I-TPLANT, I-PFP, I-PUREX, OGT, CVR,EE, CCF
241-AX-153	Diversion box	HAZOP: 222-S, 242-A, 242-S, 242-T, AW-102, C-106, S-102, SX-114, SY-102, B Plant, T Plant, U Plant, PFP, PUREX, Overground Transfers PHA: AZ-102/BX-109/SY-101	I-222S, I-242A, I-242S, I-242T, 102AW, 106C, 102S, 114SX, W058, XS, I-BPLANT, I-UPLANT, I-TPLANT, I-PFP, I-PUREX, OGT, CVR
241-AX-155	Diversion box	HAZOP: 222-S, 242-A, 242-S, 242-T, AW-102, C-106, S-102, SX-114, SY-102, B Plant, T Plant, U Plant, PFP, PUREX, Overground Transfers PHA: AZ-102/BX-109/SY-101	I-222S, I-242A, I-242S, I-242T, 102AW, 106C, 102S, 114SX, W058, XS, I-BPLANT, I-UPLANT, I-TPLANT, I-PFP, I-PUREX, OGT, CVR
241-AX-501	Valve pit	HAZOP: 222-S, 242-A, 242-S, 242-T, AW-102, C-106, S-102, SX-114, SY-102, B Plant, T Plant, U Plant, PFP, PUREX, Overground Transfers PHA: AZ-102/BX-109/SY-101	I-222S, I-242A, I-242S, I-242T, 102AW, 106C, 102S, 114SX, W058, XS, I-BPLANT, I-UPLANT, I-TPLANT, I-PFP, I-PUREX, OGT, CVR
		241-AY TANK FARM	
241-AY-1	Cleanout box	PHA: COB	COB
241-AY-101	Double-shell tank, air lift circulators, active ventilation	HAZOP: AW-102, C-106, S-102, SX-114, SY-102,222-S, 242-A, 242-S, AW-102, PFP, PUREX, B Plant, T Plant PHA: AZ-102/BX-109/SY-101/ITK WHAT IF: CCF, EE	102AW, 106C, 102S, 114SX, XS, BND, CRN, ITK, RAD, VEH, EE, CCF,I-222S, I-242A, I-242S, 102AW, I-PFP, I-PUREX, I-BPLANT, I-TPLANT
241-AY-102	Double-shell tank, air lift circulators, active ventilation	HAZOP: AW-102, C-106, S-102, SX-114, SY-102,222-S, 242-A, 242-S, AW-102, PFP, PUREX, B Plant, T Plant PHA: AZ-102/BX-109/SY-101/ITK WHAT IF: CCF, EE	102AW, 106C, 102S, 114SX, XS, BND, CRN, ITK, RAD, VEH, EE, CCF,I-222S, I-242A, I-242S, 102AW, I-PFP, I-PUREX, I-BPLANT, I-TPLANT
241-AY-151	Pumpout pit	HAZOP: 222-S, 242-A, 242-S, 242-T, AW-102, C-106, S-102, SX-114, SY-102, B Plant, T Plant, U Plant, PFP, PUREX, Overground Transfers PHA: AZ-102/BX-109/SY-101	I-222S, I-242A, I-242S, I-242T, 102AW, 106C, 102S, 114SX, W058, XS, I-BPLANT, I-UPLANT, I-TPLANT, I-PFP, I-PUREX, OGT, CVR

Table 5.2-3. Applicable Hazard Evaluations for Tank Waste Remediation System Facilities. (30 sheets)

241-AY-152	Valve box	HAZOP: 222-S, 242-A, 242-S, 242-T, AW-102, C-106, S-102, SX-114, SY-102, B Plant, T Plant, U Plant, PFP, PUREX, Overground Transfers PHA: AZ-102/BX-109/SY-101	I-222S, I-242A, I-242S, I-242T, 102AW, 106C, 102S, 114SX, W058, XS, I-BPLANT, I-UPLANT, I-TPLANT, I-PFP, I-PUREX, OGT, CVR
241-AY-501	Valve pit	HAZOP: 222-S, 242-A, 242-S, 242-T, AW-102, C-106, S-102, SX-114, SY-102, B Plant, T Plant, U Plant, PFP, PUREX, Overground Transfers PHA: AZ-102/BX-109/SY-101	I-222S, I-242A, I-242S, I-242T, 102AW, 106C, 102S, 114SX, W058, XS, I-BPLANT, I-UPLANT, I-TPLANT, I-PFP, I-PUREX, OGT, CVR
		241-AZ TANK FARM	
241-AZ-COB-01	Cleanout box	PHA: COB	COB
241-AZ-COB-02	Cleanout box	PHA: COB	COB
241-AZ-COB-03	Cleanout box	PHA: COB	COB
241-AZ-COB-04	Cleanout box	PHA: COB	COB
241-AZ-COB-05	Cleanout box	PHA: COB	COB
241-AZ-COB-06	Cleanout box	PHA: COB	COB
241-AZ-COB-07	Cleanout box	PHA: COB	COB
241-AZ-COB-08	Cleanout box	PHA: COB	COB
241-AZ-COB-09	Cleanout box	PHA: COB	COB
241-AZ-COB-10	Cleanout box	PHA: COB	COB
241-AZ-101	Double-shell tank, air lift circulators, active ventilation	HAZOP: AW-102, C-106, S-102, SX-114, SY-102,222-S, 242-A, 242-S, AW-102, PFP, PUREX, B Plant, T Plant PHA: AZ-102/BX-109/SY-101/ITK WHAT IF: CCF, EE	102AW, 106C, 102S, 114SX, XS, BND, CRN, ITK, RAD, VEH, EE, CCF,I-222S, I-242A, I-242S, 102AW, I-PFP, I-PUREX, I-BPLANT, I-TPLANT
241-AZ-102	Double-shell tank, air lift circulators, active ventilation	HAZOP: AW-102, C-106, S-102, SX-114, SY-102,222-S, 242-A, 242-S, AW-102, PFP, PUREX, B Plant, T Plant PHA: AZ-102/BX-109/SY-101/ITK WHAT IF: CCF, EE	102AW, 106C, 102S, 114SX, XS, BND, CRN, ITK, RAD, VEH, EE, CCF,I-222S, I-242A, I-242S, 102AW, I-PFP, I-PUREX, I-BPLANT, I-TPLANT
241-AZ-151	Catch tank	HAZOP: AW-102, C-106, S-102, SX-114, SY-102 PHA: AZ-102/BX-109/SY-101 WHAT IF: CCF, EE	102AW, 106C, 102S, 114SX, XS, BND, CRN, ITK, RAD, VEH, EE, CCF
241-AZ-152	Diversion box	HAZOP: 222-S, 242-A, 242-S, 242-T, AW-102, C-106, S-102, SX-114, SY-102, B Plant, T Plant, U Plant, PFP, PUREX, Overground Transfers PHA: AZ-102/BX-109/SY-101	I-222S, I-242A, I-242S, I-242T, 102AW, 106C, 102S, 114SX, W058, XS, I-BPLANT, I-UPLANT, I-TPLANT, I-PFP, I-PUREX, OGT, CVR
241-AZ-153	Valve pit	HAZOP: 222-S, 242-A, 242-S, 242-T, AW-102, C-106, S-102, SX-114, SY-102, B Plant, T Plant, U Plant, PFP, PUREX, Overground Transfers PHA: AZ-102/BX-109/SY-101	I-222S, I-242A, I-242S, I-242T, 102AW, 106C, 102S, 114SX, W058, XS, I-BPLANT, I-UPLANT, I-TPLANT, I-PFP, I-PUREX, OGT, CVR
241-AZ-154	Catch tank	HAZOP: AW-102, C-106, S-102, SX-114, SY-102 PHA: AZ-102/BX-109/SY-101 WHAT IF: CCF, EE	102AW, 106C, 102S, 114SX, XS, BND, CRN, ITK, RAD, VEH, EE, CCF
241-AZ-155	Contaminated storage pit	HAZOP: AW-102, SY-102	102AW, XS

Table 5.2-3. Applicable Hazard Evaluations for Tank Waste Remediation System Facilities. (30 sheets)

241-AZ-161	Check valve caisson	HAZOP: 222-S, 242-A, 242-S, 242-T, AW-102, C-106, S-102, SX-114, SY-102, B Plant, T Plant, U Plant, PFP, PUREX, Overground Transfers PHA: AZ-102/BX-109/SY-101	I-222S, I-242A, I-242S, I-242T, 102AW, 106C, 102S, 114SX, W058, XS, I-BPLANT, I-UPLANT, I-TPLANT, I-PFP, I-PUREX, OGT, CVR
241-AZ-162	Check valve caisson	HAZOP: 222-S, 242-A, 242-S, 242-T, AW-102, C-106, S-102, SX-114, SY-102, B Plant, T Plant, U Plant, PFP, PUREX, Overground Transfers PHA: AZ-102/BX-109/SY-101	I-222S, I-242A, I-242S, I-242T, 102AW, 106C, 102S, 114SX, W058, XS, I-BPLANT, I-UPLANT, I-TPLANT, I-PFP, I-PUREX, OGT, CVR
241-AZ-562	Valve pit	HAZOP: 222-S, 242-A, 242-S, 242-T, AW-102, C-106, S-102, SX-114, SY-102, B Plant, T Plant, U Plant, PFP, PUREX, Overground Transfers PHA: AZ-102/BX-109/SY-101	I-222S, I-242A, I-242S, I-242T, 102AW, 106C, 102S, 114SX, W058, XS, I-BPLANT, I-UPLANT, I-TPLANT, I-PFP, I-PUREX, OGT, CVR
		241-B TANK FARM	
216-B-3	Pond (B pond)	PHA: CDP	CDP
216-B-55	Crib	PHA: CDP	CDP
216-B-62	Crib	PHA: CDP	CDP
216-B-63	Ditch	PHA: CDP	CDP
241-B-101	Single-shell tank	HAZOP: AW-102, C-106, S-102, SX-114, SY-102, 242-T, Overground Transfers PHA: AZ-102/BX-109/SY-101/ITK WHAT IF: CCF, EE	102AW, 106C, 102S, 114SX, XS, BND, CRN, ITK, RAD, VEH, EE, CCF,I-242T,OGT
241-B-102	Single-shell tank	HAZOP: AW-102, C-106, S-102, SX-114, SY-102, 242-T, Overground Transfers PHA: AZ-102/BX-109/SY-101/ITK WHAT IF: CCF, EE	102AW, 106C, 102S, 114SX, XS, BND, CRN, ITK, RAD, VEH, EE, CCF,I-242T,OGT
241-B-103	Single-shell tank, organics	HAZOP: AW-102, C-106, S-102, SX-114, SY-102, 242-T, Overground Transfers PHA: AZ-102/BX-109/SY-101/ITK WHAT IF: CCF, EE	102AW, 106C, 102S, 114SX, XS, BND, CRN, ITK, RAD, VEH, EE, CCF,I-242T,OGT
241-B-104	Single-shell tank	HAZOP: AW-102, C-106, S-102, SX-114, SY-102, 242-T, Overground Transfers PHA: AZ-102/BX-109/SY-101/ITK WHAT IF: CCF, EE	102AW, 106C, 102S, 114SX, XS, BND, CRN, ITK, RAD, VEH, EE, CCF,I-242T,OGT
241-B-105	Single-shell tank	HAZOP: AW-102, C-106, S-102, SX-114, SY-102, 242-T, Overground Transfers PHA: AZ-102/BX-109/SY-101/ITK WHAT IF: CCF, EE	102AW, 106C, 102S, 114SX, XS, BND, CRN, ITK, RAD, VEH, EE, CCF,I-242T,OGT
241-B-106	Single-shell tank	HAZOP: AW-102, C-106, S-102, SX-114, SY-102, 242-T, Overground Transfers PHA: AZ-102/BX-109/SY-101/ITK WHAT IF: CCF, EE	102AW, 106C, 102S, 114SX, XS, BND, CRN, ITK, RAD, VEH, EE, CCF,I-242T,OGT
241-B-107	Single-shell tank	HAZOP: AW-102, C-106, S-102, SX-114, SY-102, 242-T, Overground Transfers PHA: AZ-102/BX-109/SY-101/ITK WHAT IF: CCF, EE	102AW, 106C, 102S, 114SX, XS, BND, CRN, ITK, RAD, VEH, EE, CCF,I-242T,OGT

Table 5.2-3. Applicable Hazard Evaluations for Tank Waste Remediation System Facilities. (30 sheets)

241-B-108	Single-shell tank	HAZOP: AW-102, C-106, S-102, SX-114, SY-102, 242-T, Overground Transfers PHA: AZ-102/BX-109/SY-101/ITK WHAT IF: CCF, EE	102AW, 106C, 102S, 114SX, XS, BND, CRN, ITK, RAD, VEH, EE, CCF,I-242T,OGT
241-B-109	Single-shell tank	HAZOP: AW-102, C-106, S-102, SX-114, SY-102, 242-T, Overground Transfers PHA: AZ-102/BX-109/SY-101/ITK WHAT IF: CCF, EE	102AW, 106C, 102S, 114SX, XS, BND, CRN, ITK, RAD, VEH, EE, CCF,I-242T,OGT
241-B-110	Single-shell tank	HAZOP: AW-102, C-106, S-102, SX-114, SY-102, 242-T, Overground Transfers PHA: AZ-102/BX-109/SY-101/ITK WHAT IF: CCF, EE	102AW, 106C, 102S, 114SX, XS, BND, CRN, ITK, RAD, VEH, EE, CCF,I-242T,OGT
241-B-111	Single-shell tank	HAZOP: AW-102, C-106, S-102, SX-114, SY-102, 242-T, Overground Transfers PHA: AZ-102/BX-109/SY-101/ITK WHAT IF: CCF, EE	102AW, 106C, 102S, 114SX, XS, BND, CRN, ITK, RAD, VEH, EE, CCF,I-242T,OGT
241-B-112	Single-shell tank	HAZOP: AW-102, C-106, S-102, SX-114, SY-102, 242-T, Overground Transfers PHA: AZ-102/BX-109/SY-101/ITK WHAT IF: CCF, EE	102AW, 106C, 102S, 114SX, XS, BND, CRN, ITK, RAD, VEH, EE, CCF,I-242T,OGT
241-B-151	Diversion box	HAZOP: 222-S, 242-A, 242-S, 242-T, AW-102, C-106, S-102, SX-114, SY-102, B Plant, T Plant, U Plant, PFP, PUREX, Overground Transfers PHA: AZ-102/BX-109/SY-101	I-222S, I-242A, I-242S, I-242T, 102AW, 106C, 102S, 114SX, W058, XS, I-BPLANT, I-UPLANT, I-TPLANT, I-PFP, I-PUREX, OGT, CVR
241-B-152	Diversion box	HAZOP: 222-S, 242-A, 242-S, 242-T, AW-102, C-106, S-102, SX-114, SY-102, B Plant, T Plant, U Plant, PFP, PUREX, Overground Transfers PHA: AZ-102/BX-109/SY-101	I-222S, I-242A, I-242S, I-242T, 102AW, 106C, 102S, 114SX, W058, XS, I-BPLANT, I-UPLANT, I-TPLANT, I-PFP, I-PUREX, OGT, CVR
241-B-153	Diversion box	HAZOP: 222-S, 242-A, 242-S, 242-T, AW-102, C-106, S-102, SX-114, SY-102, B Plant, T Plant, U Plant, PFP, PUREX, Overground Transfers PHA: AZ-102/BX-109/SY-101	I-222S, I-242A, I-242S, I-242T, 102AW, 106C, 102S, 114SX, W058, XS, I-BPLANT, I-UPLANT, I-TPLANT, I-PFP, I-PUREX, OGT, CVR
241-B-154	Diversion box	HAZOP: 222-S, 242-A, 242-S, 242-T, AW-102, C-106, S-102, SX-114, SY-102, B Plant, T Plant, U Plant, PFP, PUREX, Overground Transfers PHA: AZ-102/BX-109/SY-101	I-222S, I-242A, I-242S, I-242T, 102AW, 106C, 102S, 114SX, W058, XS, I-BPLANT, I-UPLANT, I-TPLANT, I-PFP, I-PUREX, OGT, CVR
241-B-201	Single-shell tank	HAZOP: AW-102, C-106, S-102, SX-114, SY-102, 242-T, Overground Transfers PHA: AZ-102/BX-109/SY-101/ITK WHAT IF: CCF, EE	102AW, 106C, 102S, 114SX, XS, BND, CRN, ITK, RAD, VEH, EE, CCF,I-242T,OGT
241-B-202	Single-shell tank	HAZOP: AW-102, C-106, S-102, SX-114, SY-102, 242-T, Overground Transfers PHA: AZ-102/BX-109/SY-101/ITK WHAT IF: CCF, EE	102AW, 106C, 102S, 114SX, XS, BND, CRN, ITK, RAD, VEH, EE, CCF,I-242T,OGT
241-B-203	Single-shell tank	HAZOP: AW-102, C-106, S-102, SX-114, SY-102, 242-T, Overground Transfers PHA: AZ-102/BX-109/SY-101/ITK WHAT IF: CCF, EE	102AW, 106C, 102S, 114SX, XS, BND, CRN, ITK, RAD, VEH, EE, CCF,I-242T,OGT

Table 5.2-3. Applicable Hazard Evaluations for Tank Waste Remediation System Facilities. (30 sheets)

241-B-204	Single-shell tank	HAZOP: AW-102, C-106, S-102, SX-114, SY-102, 242-T, Overground Transfers PHA: AZ-102/BX-109/SY-101/ITK WHAT IF: CCF, EE	102AW, 106C, 102S, 114SX, XS, BND, CRN, ITK, RAD, VEH, EE, CCF,I-242T,OGT
242-B-151	Diversion box	HAZOP: 222-S, 242-A, 242-S, 242-T, AW-102, C-106, S-102, SX-114, SY-102, B Plant, T Plant, U Plant, PFP, PUREX, Overground Transfers PHA: AZ-102/BX-109/SY-101	I-222S, I-242A, I-242S, I-242T, 102AW, 106C, 102S, 114SX, W058, XS, I-BPLANT, I-UPLANT, I-TPLANT, I-PFP, I-PUREX, OGT, CVR
241-B-252	Diversion box	HAZOP: 222-S, 242-A, 242-S, 242-T, AW-102, C-106, S-102, SX-114, SY-102, B Plant, T Plant, U Plant, PFP, PUREX, Overground Transfers PHA: AZ-102/BX-109/SY-101	I-222S, I-242A, I-242S, I-242T, 102AW, 106C, 102S, 114SX, W058, XS, I-BPLANT, I-UPLANT, I-TPLANT, I-PFP, I-PUREX, OGT, CVR
241-BX TANK FARM			
241-BX-101	Single-shell tank	HAZOP: AW-102, C-106, S-102, SX-114, SY-102, 242-T, Overground Transfers PHA: AZ-102/BX-109/SY-101/ITK WHAT IF: CCF, EE	102AW, 106C, 102S, 114SX, XS, BND, CRN, ITK, RAD, VEH, EE, CCF,I-242T,OGT
241-BX-102	Single-shell tank	HAZOP: AW-102, C-106, S-102, SX-114, SY-102, 242-T, Overground Transfers PHA: AZ-102/BX-109/SY-101/ITK WHAT IF: CCF, EE	102AW, 106C, 102S, 114SX, XS, BND, CRN, ITK, RAD, VEH, EE, CCF,I-242T,OGT
241-BX-103	Single-shell tank	HAZOP: AW-102, C-106, S-102, SX-114, SY-102, 242-T, Overground Transfers PHA: AZ-102/BX-109/SY-101/ITK WHAT IF: CCF, EE	102AW, 106C, 102S, 114SX, XS, BND, CRN, ITK, RAD, VEH, EE, CCF,I-242T,OGT
241-BX-104	Single-shell tank	HAZOP: AW-102, C-106, S-102, SX-114, SY-102, 242-T, Overground Transfers PHA: AZ-102/BX-109/SY-101/ITK WHAT IF: CCF, EE	102AW, 106C, 102S, 114SX, XS, BND, CRN, ITK, RAD, VEH, EE, CCF,I-242T,OGT
241-BX-105	Single-shell tank	HAZOP: AW-102, C-106, S-102, SX-114, SY-102, 242-T, Overground Transfers PHA: AZ-102/BX-109/SY-101/ITK WHAT IF: CCF, EE	102AW, 106C, 102S, 114SX, XS, BND, CRN, ITK, RAD, VEH, EE, CCF,I-242T,OGT
241-BX-106	Single-shell tank	HAZOP: AW-102, C-106, S-102, SX-114, SY-102, 242-T, Overground Transfers PHA: AZ-102/BX-109/SY-101/ITK WHAT IF: CCF, EE	102AW, 106C, 102S, 114SX, XS, BND, CRN, ITK, RAD, VEH, EE, CCF,I-242T,OGT
241-BX-107	Single-shell tank	HAZOP: AW-102, C-106, S-102, SX-114, SY-102, 242-T, Overground Transfers PHA: AZ-102/BX-109/SY-101/ITK WHAT IF: CCF, EE	102AW, 106C, 102S, 114SX, XS, BND, CRN, ITK, RAD, VEH, EE, CCF,I-242T,OGT
241-BX-108	Single-shell tank	HAZOP: AW-102, C-106, S-102, SX-114, SY-102, 242-T, Overground Transfers PHA: AZ-102/BX-109/SY-101/ITK WHAT IF: CCF, EE	102AW, 106C, 102S, 114SX, XS, BND, CRN, ITK, RAD, VEH, EE, CCF,I-242T,OGT
241-BX-109	Single-shell tank	HAZOP: AW-102, C-106, S-102, SX-114, SY-102, 242-T, Overground Transfers PHA: AZ-102/BX-109/SY-101/ITK WHAT IF: CCF, EE	102AW, 106C, 102S, 114SX, XS, BND, CRN, ITK, RAD, VEH, EE, CCF,I-242T,OGT

Table 5.2-3. Applicable Hazard Evaluations for Tank Waste Remediation System Facilities. (30 sheets)

241-BX-110	Single-shell tank	HAZOP: AW-102, C-106, S-102, SX-114, SY-102, 242-T, Overground Transfers PHA: AZ-102/BX-109/SY-101/ITK WHAT IF: CCF, EE	102AW, 106C, 102S, 114SX, XS, BND, CRN, ITK, RAD, VEH, EE, CCF,I-242T,OGT
241-BX-111	Single-shell tank	HAZOP: AW-102, C-106, S-102, SX-114, SY-102, 242-T, Overground Transfers PHA: AZ-102/BX-109/SY-101/ITK WHAT IF: CCF, EE	102AW, 106C, 102S, 114SX, XS, BND, CRN, ITK, RAD, VEH, EE, CCF,I-242T,OGT
241-BX-112	Single-shell tank	HAZOP: AW-102, C-106, S-102, SX-114, SY-102, 242-T, Overground Transfers PHA: AZ-102/BX-109/SY-101/ITK WHAT IF: CCF, EE	102AW, 106C, 102S, 114SX, XS, BND, CRN, ITK, RAD, VEH, EE, CCF,I-242T,OGT
241-BXR-151	Diversion box	HAZOP: 222-S, 242-A, 242-S, 242-T, AW-102, C-106, S-102, SX-114, SY-102, B Plant, T Plant, U Plant, PFP, PUREX, Overground Transfers PHA: AZ-102/BX-109/SY-101	I-222S, I-242A, I-242S, I-242T, 102AW, 106C, 102S, 114SX, W058, XS, I-BPLANT, I-UPLANT, I-TPLANT, I-PFP, I-PUREX, OGT, CVR
241-BXR-152	Diversion box	HAZOP: 222-S, 242-A, 242-S, 242-T, AW-102, C-106, S-102, SX-114, SY-102, B Plant, T Plant, U Plant, PFP, PUREX, Overground Transfers PHA: AZ-102/BX-109/SY-101	I-222S, I-242A, I-242S, I-242T, 102AW, 106C, 102S, 114SX, W058, XS, I-BPLANT, I-UPLANT, I-TPLANT, I-PFP, I-PUREX, OGT, CVR
241-BXR-153	Diversion box	HAZOP: 222-S, 242-A, 242-S, 242-T, AW-102, C-106, S-102, SX-114, SY-102, B Plant, T Plant, U Plant, PFP, PUREX, Overground Transfers PHA: AZ-102/BX-109/SY-101	I-222S, I-242A, I-242S, I-242T, 102AW, 106C, 102S, 114SX, W058, XS, I-BPLANT, I-UPLANT, I-TPLANT, I-PFP, I-PUREX, OGT, CVR
241-BY TANK FARM			
241-BY-101	Single-shell tank	HAZOP: AW-102, C-106, S-102, SX-114, SY-102, 242-T, Overground Transfers PHA: AZ-102/BX-109/SY-101/ITK WHAT IF: CCF, EE	102AW, 106C, 102S, 114SX, XS, BND, CRN, ITK, RAD, VEH, EE, CCF,I-242T,OGT
241-BY-102	Single-shell tank	HAZOP: AW-102, C-106, S-102, SX-114, SY-102, 242-T, Overground Transfers PHA: AZ-102/BX-109/SY-101/ITK WHAT IF: CCF, EE	102AW, 106C, 102S, 114SX, XS, BND, CRN, ITK, RAD, VEH, EE, CCF,I-242T,OGT
241-BY-103	Single-shell tank, ferrocyanide	HAZOP: AW-102, C-106, S-102, SX-114, SY-102, 242-T, Overground Transfers PHA: AZ-102/BX-109/SY-101/ITK WHAT IF: CCF, EE	102AW, 106C, 102S, 114SX, XS, BND, CRN, ITK, RAD, VEH, EE, CCF,I-242T,OGT
241-BY-104	Single-shell tank, ferrocyanide	HAZOP: AW-102, C-106, S-102, SX-114, SY-102, 242-T, Overground Transfers PHA: AZ-102/BX-109/SY-101/ITK WHAT IF: CCF, EE	102AW, 106C, 102S, 114SX, XS, BND, CRN, ITK, RAD, VEH, EE, CCF,I-242T,OGT
241-BY-105	Single-shell tank, ferrocyanide	HAZOP: AW-102, C-106, S-102, SX-114, SY-102, 242-T, Overground Transfers PHA: AZ-102/BX-109/SY-101/ITK WHAT IF: CCF, EE	102AW, 106C, 102S, 114SX, XS, BND, CRN, ITK, RAD, VEH, EE, CCF,I-242T,OGT
241-BY-106	Single-shell tank, ferrocyanide	HAZOP: AW-102, C-106, S-102, SX-114, SY-102, 242-T, Overground Transfers PHA: AZ-102/BX-109/SY-101/ITK WHAT IF: CCF, EE	102AW, 106C, 102S, 114SX, XS, BND, CRN, ITK, RAD, VEH, EE, CCF,I-242T,OGT

Table 5.2-3. Applicable Hazard Evaluations for Tank Waste Remediation System Facilities. (30 sheets)

241-BY-107	Single-shell tank, ferrocyanide	HAZOP: AW-102, C-106, S-102, SX-114, SY-102, 242-T, Overground Transfers PHA: AZ-102/BX-109/SY-101/ITK WHAT IF: CCF, EE	102AW, 106C, 102S, 114SX, XS, BND, CRN, ITK, RAD, VEH, EE, CCF,I-242T,OGT
241-BY-108	Single-shell tank, ferrocyanide	HAZOP: AW-102, C-106, S-102, SX-114, SY-102, 242-T, Overground Transfers PHA: AZ-102/BX-109/SY-101/ITK WHAT IF: CCF, EE	102AW, 106C, 102S, 114SX, XS, BND, CRN, ITK, RAD, VEH, EE, CCF,I-242T,OGT
241-BY-109	Single-shell tank	HAZOP: AW-102, C-106, S-102, SX-114, SY-102, 242-T, Overground Transfers PHA: AZ-102/BX-109/SY-101/ITK WHAT IF: CCF, EE	102AW, 106C, 102S, 114SX, XS, BND, CRN, ITK, RAD, VEH, EE, CCF,I-242T,OGT
241-BY-110	Single-shell tank, ferrocyanide	HAZOP: AW-102, C-106, S-102, SX-114, SY-102, 242-T, Overground Transfers PHA: AZ-102/BX-109/SY-101/ITK WHAT IF: CCF, EE	102AW, 106C, 102S, 114SX, XS, BND, CRN, ITK, RAD, VEH, EE, CCF,I-242T,OGT
241-BY-111	Single-shell tank, ferrocyanide	HAZOP: AW-102, C-106, S-102, SX-114, SY-102, 242-T, Overground Transfers PHA: AZ-102/BX-109/SY-101/ITK WHAT IF: CCF, EE	102AW, 106C, 102S, 114SX, XS, BND, CRN, ITK, RAD, VEH, EE, CCF,I-242T,OGT
241-BY-112	Single-shell tank, ferrocyanide	HAZOP: AW-102, C-106, S-102, SX-114, SY-102, 242-T, Overground Transfers PHA: AZ-102/BX-109/SY-101/ITK WHAT IF: CCF, EE	102AW, 106C, 102S, 114SX, XS, BND, CRN, ITK, RAD, VEH, EE, CCF,I-242T,OGT
241-BYR-152	Diversion box	HAZOP: 222-S, 242-A, 242-S, 242-T, AW-102, C-106, S-102, SX-114, SY-102, B Plant, T Plant, U Plant, PFP, PUREX, Overground Transfers PHA: AZ-102/BX-109/SY-101	I-222S, I-242A, I-242S, I-242T, 102AW, 106C, 102S, 114SX, W058, XS, I-BPLANT, I-UPLANT, I-TPLANT, I-PFP, I-PUREX, OGT, CVR
241-BYR-153	Diversion box	HAZOP: 222-S, 242-A, 242-S, 242-T, AW-102, C-106, S-102, SX-114, SY-102, B Plant, T Plant, U Plant, PFP, PUREX, Overground Transfers PHA: AZ-102/BX-109/SY-101	I-222S, I-242A, I-242S, I-242T, 102AW, 106C, 102S, 114SX, W058, XS, I-BPLANT, I-UPLANT, I-TPLANT, I-PFP, I-PUREX, OGT, CVR
241-BYR-154	Diversion box	HAZOP: 222-S, 242-A, 242-S, 242-T, AW-102, C-106, S-102, SX-114, SY-102, B Plant, T Plant, U Plant, PFP, PUREX, Overground Transfers PHA: AZ-102/BX-109/SY-101	I-222S, I-242A, I-242S, I-242T, 102AW, 106C, 102S, 114SX, W058, XS, I-BPLANT, I-UPLANT, I-TPLANT, I-PFP, I-PUREX, OGT, CVR
241-BYR-155	Diversion box	HAZOP: 222-S, 242-A, 242-S, 242-T, AW-102, C-106, S-102, SX-114, SY-102, B Plant, T Plant, U Plant, PFP, PUREX, Overground Transfers PHA: AZ-102/BX-109/SY-101	I-222S, I-242A, I-242S, I-242T, 102AW, 106C, 102S, 114SX, W058, XS, I-BPLANT, I-UPLANT, I-TPLANT, I-PFP, I-PUREX, OGT, CVR
241-C TANK FARM			
241-C-101	Single-shell tank	HAZOP: AW-102, C-106, S-102, SX-114, SY-102, 242-T, Overground Transfers PHA: AZ-102/BX-109/SY-101/ITK WHAT IF: CCF, EE	102AW, 106C, 102S, 114SX, XS, BND, CRN, ITK, RAD, VEH, EE, CCF,I-242T,OGT

Table 5.2-3. Applicable Hazard Evaluations for Tank Waste Remediation System Facilities. (30 sheets)

241-C-102	Single-shell tank	HAZOP: AW-102, C-106, S-102, SX-114, SY-102, 242-T, Overground Transfers PHA: AZ-102/BX-109/SY-101/ITK WHAT IF: CCF, EE	102AW, 106C, 102S, 114SX, XS, BND, CRN, ITK, RAD, VEH, EE, CCF,I-242T,OGT
241-C-103	Single-shell tank	HAZOP: AW-102, C-106, S-102, SX-114, SY-102, 242-T, Overground Transfers PHA: AZ-102/BX-109/SY-101/ITK WHAT IF: CCF, EE	102AW, 106C, 102S, 114SX, XS, BND, CRN, ITK, RAD, VEH, EE, CCF,I-242T,OGT
241-C-104	Single-shell tank	HAZOP: AW-102, C-106, S-102, SX-114, SY-102, 242-T, Overground Transfers PHA: AZ-102/BX-109/SY-101/ITK WHAT IF: CCF, EE	102AW, 106C, 102S, 114SX, XS, BND, CRN, ITK, RAD, VEH, EE, CCF,I-242T,OGT
241-C-105	Single-shell tank, active ventilation	HAZOP: AW-102, C-106, S-102, SX-114, SY-102, 242-T, Overground Transfers PHA: AZ-102/BX-109/SY-101/ITK WHAT IF: CCF, EE	102AW, 106C, 102S, 114SX, XS, BND, CRN, ITK, RAD, VEH, EE, CCF,I-242T,OGT
241-C-106	Single-shell tank, high heat load, active ventilation	HAZOP: AW-102, C-106, S-102, SX-114, SY-102, 242-T, Overground Transfers PHA: AZ-102/BX-109/SY-101/ITK WHAT IF: CCF, EE	102AW, 106C, 102S, 114SX, XS, BND, CRN, ITK, RAD, VEH, EE, CCF,I-242T,OGT
241-C-107	Single-shell tank	HAZOP: AW-102, C-106, S-102, SX-114, SY-102, 242-T, Overground Transfers PHA: AZ-102/BX-109/SY-101/ITK WHAT IF: CCF, EE	102AW, 106C, 102S, 114SX, XS, BND, CRN, ITK, RAD, VEH, EE, CCF,I-242T,OGT
241-C-108	Single-shell tank, ferrocyanide	HAZOP: AW-102, C-106, S-102, SX-114, SY-102, 242-T, Overground Transfers PHA: AZ-102/BX-109/SY-101/ITK WHAT IF: CCF, EE	102AW, 106C, 102S, 114SX, XS, BND, CRN, ITK, RAD, VEH, EE, CCF,I-242T,OGT
241-C-109	Single-shell tank, ferrocyanide	HAZOP: AW-102, C-106, S-102, SX-114, SY-102, 242-T, Overground Transfers PHA: AZ-102/BX-109/SY-101/ITK WHAT IF: CCF, EE	102AW, 106C, 102S, 114SX, XS, BND, CRN, ITK, RAD, VEH, EE, CCF,I-242T,OGT
241-C-110	Single-shell tank	HAZOP: AW-102, C-106, S-102, SX-114, SY-102, 242-T, Overground Transfers PHA: AZ-102/BX-109/SY-101/ITK WHAT IF: CCF, EE	102AW, 106C, 102S, 114SX, XS, BND, CRN, ITK, RAD, VEH, EE, CCF,I-242T,OGT
241-C-111	Single-shell tank, ferrocyanide	HAZOP: AW-102, C-106, S-102, SX-114, SY-102, 242-T, Overground Transfers PHA: AZ-102/BX-109/SY-101/ITK WHAT IF: CCF, EE	102AW, 106C, 102S, 114SX, XS, BND, CRN, ITK, RAD, VEH, EE, CCF,I-242T,OGT
241-C-112	Single-shell tank, ferrocyanide	HAZOP: AW-102, C-106, S-102, SX-114, SY-102, 242-T, Overground Transfers PHA: AZ-102/BX-109/SY-101/ITK WHAT IF: CCF, EE	102AW, 106C, 102S, 114SX, XS, BND, CRN, ITK, RAD, VEH, EE, CCF,I-242T,OGT
241-C-151	Diversion box	HAZOP: 222-S, 242-A, 242-S, 242-T, AW-102, C-106, S-102, SX-114, SY-102, B Plant, T Plant, U Plant, PFP, PUREX, Overground Transfers PHA: AZ-102/BX-109/SY-101	I-222S, I-242A, I-242S, I-242T, 102AW, 106C, 102S, 114SX, W058, XS, I-BPLANT, I-UPLANT, I-TPLANT, I-PFP, I-PUREX, OGT, CVR

Table 5.2-3. Applicable Hazard Evaluations for Tank Waste Remediation System Facilities. (30 sheets)

241-C-152	Diversion box	HAZOP: 222-S, 242-A, 242-S, 242-T, AW-102, C-106, S-102, SX-114, SY-102, B Plant, T Plant, U Plant, PFP, PUREX, Overground Transfers PHA: AZ-102/BX-109/SY-101	I-222S, I-242A, I-242S, I-242T, 102AW, 106C, 102S, 114SX, W058, XS, I-BPLANT, I-UPLANT, I-TPLANT, I-PFP, I-PUREX, OGT, CVR
241-C-153	Diversion box	HAZOP: 222-S, 242-A, 242-S, 242-T, AW-102, C-106, S-102, SX-114, SY-102, B Plant, T Plant, U Plant, PFP, PUREX, Overground Transfers PHA: AZ-102/BX-109/SY-101	I-222S, I-242A, I-242S, I-242T, 102AW, 106C, 102S, 114SX, W058, XS, I-BPLANT, I-UPLANT, I-TPLANT, I-PFP, I-PUREX, OGT, CVR
241-C-154	Diversion box	HAZOP: 222-S, 242-A, 242-S, 242-T, AW-102, C-106, S-102, SX-114, SY-102, B Plant, T Plant, U Plant, PFP, PUREX, Overground Transfers PHA: AZ-102/BX-109/SY-101	I-222S, I-242A, I-242S, I-242T, 102AW, 106C, 102S, 114SX, W058, XS, I-BPLANT, I-UPLANT, I-TPLANT, I-PFP, I-PUREX, OGT, CVR
241-C-201	Single-shell tank	HAZOP: AW-102, C-106, S-102, SX-114, SY-102, 242-T, Overground Transfers PHA: AZ-102/BX-109/SY-101/ITK WHAT IF: CCF, EE	102AW, 106C, 102S, 114SX, XS, BND, CRN, ITK, RAD, VEH, EE, CCF,I-242T,OGT
241-C-202	Single-shell tank	HAZOP: AW-102, C-106, S-102, SX-114, SY-102, 242-T, Overground Transfers PHA: AZ-102/BX-109/SY-101/ITK WHAT IF: CCF, EE	102AW, 106C, 102S, 114SX, XS, BND, CRN, ITK, RAD, VEH, EE, CCF,I-242T,OGT
241-C-203	Single-shell tank	HAZOP: AW-102, C-106, S-102, SX-114, SY-102, 242-T, Overground Transfers PHA: AZ-102/BX-109/SY-101/ITK WHAT IF: CCF, EE	102AW, 106C, 102S, 114SX, XS, BND, CRN, ITK, RAD, VEH, EE, CCF,I-242T,OGT
241-C-204	Single-shell tank	HAZOP: AW-102, C-106, S-102, SX-114, SY-102, 242-T, Overground Transfers PHA: AZ-102/BX-109/SY-101/ITK WHAT IF: CCF, EE	102AW, 106C, 102S, 114SX, XS, BND, CRN, ITK, RAD, VEH, EE, CCF,I-242T,OGT
241-C-252	Diversion box	HAZOP: 222-S, 242-A, 242-S, 242-T, AW-102, C-106, S-102, SX-114, SY-102, B Plant, T Plant, U Plant, PFP, PUREX, Overground Transfers PHA: AZ-102/BX-109/SY-101	I-222S, I-242A, I-242S, I-242T, 102AW, 106C, 102S, 114SX, W058, XS, I-BPLANT, I-UPLANT, I-TPLANT, I-PFP, I-PUREX, OGT, CVR
241-S TANK FARM			
216-S-25	Crib	PHA: CDP	CDP
216-S-26	Crib	PHA: CDP	CDP
241-S-A	Valve pit	HAZOP: 222-S, 242-A, 242-S, 242-T, AW-102, C-106, S-102, SX-114, SY-102, B Plant, T Plant, U Plant, PFP, PUREX, Overground Transfers PHA: AZ-102/BX-109/SY-101	I-222S, I-242A, I-242S, I-242T, 102AW, 106C, 102S, 114SX, W058, XS, I-BPLANT, I-UPLANT, I-TPLANT, I-PFP, I-PUREX, OGT, CVR
241-S-B	Valve pit	HAZOP: 222-S, 242-A, 242-S, 242-T, AW-102, C-106, S-102, SX-114, SY-102, B Plant, T Plant, U Plant, PFP, PUREX, Overground Transfers PHA: AZ-102/BX-109/SY-101	I-222S, I-242A, I-242S, I-242T, 102AW, 106C, 102S, 114SX, W058, XS, I-BPLANT, I-UPLANT, I-TPLANT, I-PFP, I-PUREX, OGT, CVR

Table 5.2-3. Applicable Hazard Evaluations for Tank Waste Remediation System Facilities. (30 sheets)

241-S-C	Valve pit	HAZOP: 222-S, 242-A, 242-S, 242-T, AW-102, C-106, S-102, SX-114, SY-102, B Plant, T Plant, U Plant, PFP, PUREX, Overground Transfers PHA: AZ-102/BX-109/SY-101	I-222S, I-242A, I-242S, I-242T, 102AW, 106C, 102S, 114SX, W058, XS, I-BPLANT, I-UPLANT, I-TPLANT, I-PFP, I-PUREX, OGT, CVR
241-S-D	Valve pit	HAZOP: 222-S, 242-A, 242-S, 242-T, AW-102, C-106, S-102, SX-114, SY-102, B Plant, T Plant, U Plant, PFP, PUREX, Overground Transfers PHA: AZ-102/BX-109/SY-101	I-222S, I-242A, I-242S, I-242T, 102AW, 106C, 102S, 114SX, W058, XS, I-BPLANT, I-UPLANT, I-TPLANT, I-PFP, I-PUREX, OGT, CVR
241-S-VSU	Vertical Storage Units	PHA: VSU	VSU
241-S-101	Single-shell tank	HAZOP: AW-102, C-106, S-102, SX-114, SY-102, 242-T, Overground Transfers PHA: AZ-102/BX-109/SY-101/ITK WHAT IF: CCF, EE	102AW, 106C, 102S, 114SX, XS, BND, CRN, ITK, RAD, VEH, EE, CCF,I-242T,OGT
241-S-102	Single-shell tank, flammable gas, organics	HAZOP: AW-102, C-106, S-102, SX-114, SY-102, 242-T, Overground Transfers PHA: AZ-102/BX-109/SY-101/ITK WHAT IF: CCF, EE	102AW, 106C, 102S, 114SX, XS, BND, CRN, ITK, RAD, VEH, EE, CCF,I-242T,OGT
241-S-103	Single-shell tank	HAZOP: AW-102, C-106, S-102, SX-114, SY-102, 242-T, Overground Transfers PHA: AZ-102/BX-109/SY-101/ITK WHAT IF: CCF, EE	102AW, 106C, 102S, 114SX, XS, BND, CRN, ITK, RAD, VEH, EE, CCF,I-242T,OGT
241-S-104	Single-shell tank	HAZOP: AW-102, C-106, S-102, SX-114, SY-102, 242-T, Overground Transfers PHA: AZ-102/BX-109/SY-101/ITK WHAT IF: CCF, EE	102AW, 106C, 102S, 114SX, XS, BND, CRN, ITK, RAD, VEH, EE, CCF,I-242T,OGT
241-S-105	Single-shell tank	HAZOP: AW-102, C-106, S-102, SX-114, SY-102, 242-T, Overground Transfers PHA: AZ-102/BX-109/SY-101/ITK WHAT IF: CCF, EE	102AW, 106C, 102S, 114SX, XS, BND, CRN, ITK, RAD, VEH, EE, CCF,I-242T,OGT
241-S-106	Single-shell tank	HAZOP: AW-102, C-106, S-102, SX-114, SY-102, 242-T, Overground Transfers PHA: AZ-102/BX-109/SY-101/ITK WHAT IF: CCF, EE	102AW, 106C, 102S, 114SX, XS, BND, CRN, ITK, RAD, VEH, EE, CCF,I-242T,OGT
241-S-107	Single-shell tank	HAZOP: AW-102, C-106, S-102, SX-114, SY-102, 242-T, Overground Transfers PHA: AZ-102/BX-109/SY-101/ITK WHAT IF: CCF, EE	102AW, 106C, 102S, 114SX, XS, BND, CRN, ITK, RAD, VEH, EE, CCF,I-242T,OGT
241-S-108	Single-shell tank	HAZOP: AW-102, C-106, S-102, SX-114, SY-102, 242-T, Overground Transfers PHA: AZ-102/BX-109/SY-101/ITK WHAT IF: CCF, EE	102AW, 106C, 102S, 114SX, XS, BND, CRN, ITK, RAD, VEH, EE, CCF,I-242T,OGT
241-S-109	Single-shell tank	HAZOP: AW-102, C-106, S-102, SX-114, SY-102, 242-T, Overground Transfers PHA: AZ-102/BX-109/SY-101/ITK WHAT IF: CCF, EE	102AW, 106C, 102S, 114SX, XS, BND, CRN, ITK, RAD, VEH, EE, CCF,I-242T,OGT
241-S-110	Single-shell tank	HAZOP: AW-102, C-106, S-102, SX-114, SY-102, 242-T, Overground Transfers PHA: AZ-102/BX-109/SY-101/ITK WHAT IF: CCF, EE	102AW, 106C, 102S, 114SX, XS, BND, CRN, ITK, RAD, VEH, EE, CCF,I-242T,OGT

Table 5.2-3. Applicable Hazard Evaluations for Tank Waste Remediation System Facilities. (30 sheets)

241-S-111	Single-shell tank	HAZOP: AW-102, C-106, S-102, SX-114, SY-102, 242-T, Overground Transfers PHA: AZ-102/BX-109/SY-101/ITK WHAT IF: CCF, EE	102AW, 106C, 102S, 114SX, XS, BND, CRN, ITK, RAD, VEH, EE, CCF,I-242T,OGT
241-S-112	Single-shell tank	HAZOP: AW-102, C-106, S-102, SX-114, SY-102, 242-T, Overground Transfers PHA: AZ-102/BX-109/SY-101/ITK WHAT IF: CCF, EE	102AW, 106C, 102S, 114SX, XS, BND, CRN, ITK, RAD, VEH, EE, CCF,I-242T,OGT
241-S-151	Diversion box	HAZOP: 222-S, 242-A, 242-S, 242-T, AW-102, C-106, S-102, SX-114, SY-102, B Plant, T Plant, U Plant, PFP, PUREX, Overground Transfers PHA: AZ-102/BX-109/SY-101	I-222S, I-242A, I-242S, I-242T, 102AW, 106C, 102S, 114SX, W058, XS, I-BPLANT, I-UPLANT, I-TPLANT, I-PFP, I-PUREX, OGT, CVR
241-S-152	Diversion box	HAZOP: 222-S, 242-A, 242-S, 242-T, AW-102, C-106, S-102, SX-114, SY-102, B Plant, T Plant, U Plant, PFP, PUREX, Overground Transfers PHA: AZ-102/BX-109/SY-101	I-222S, I-242A, I-242S, I-242T, 102AW, 106C, 102S, 114SX, W058, XS, I-BPLANT, I-UPLANT, I-TPLANT, I-PFP, I-PUREX, OGT, CVR
241-S-304	Catch tank	HAZOP: AW-102, C-106, S-102, SX-114, SY-102 PHA: AZ-102/BX-109/SY-101 WHAT IF: CCF, EE	102AW, 106C, 102S, 114SX, XS, BND, CRN, ITK, RAD, VEH, EE, CCF
		241-SX TANK FARM	
241-SX-101	Single-shell tank, flammable gas, active ventilation	HAZOP: AW-102, C-106, S-102, SX-114, SY-102, 242-T, Overground Transfers PHA: AZ-102/BX-109/SY-101/ITK WHAT IF: CCF, EE	102AW, 106C, 102S, 114SX, XS, BND, CRN, ITK, RAD, VEH, EE, CCF,I-242T,OGT
241-SX-102	Single-shell tank, flammable gas, active ventilation	HAZOP: AW-102, C-106, S-102, SX-114, SY-102, 242-T, Overground Transfers PHA: AZ-102/BX-109/SY-101/ITK WHAT IF: CCF, EE	102AW, 106C, 102S, 114SX, XS, BND, CRN, ITK, RAD, VEH, EE, CCF,I-242T,OGT
241-SX-103	Single-shell tank, flammable gas, organics, active ventilation	HAZOP: AW-102, C-106, S-102, SX-114, SY-102, 242-T, Overground Transfers PHA: AZ-102/BX-109/SY-101/ITK WHAT IF: CCF, EE	102AW, 106C, 102S, 114SX, XS, BND, CRN, ITK, RAD, VEH, EE, CCF,I-242T,OGT
241-SX-104	Single-shell tank, flammable gas, active ventilation	HAZOP: AW-102, C-106, S-102, SX-114, SY-102, 242-T, Overground Transfers PHA: AZ-102/BX-109/SY-101/ITK WHAT IF: CCF, EE	102AW, 106C, 102S, 114SX, XS, BND, CRN, ITK, RAD, VEH, EE, CCF,I-242T,OGT
241-SX-105	Single-shell tank, flammable gas, active ventilation	HAZOP: AW-102, C-106, S-102, SX-114, SY-102, 242-T, Overground Transfers PHA: AZ-102/BX-109/SY-101/ITK WHAT IF: CCF, EE	102AW, 106C, 102S, 114SX, XS, BND, CRN, ITK, RAD, VEH, EE, CCF,I-242T,OGT
241-SX-106	Single-shell tank, flammable gas, organics, active ventilation	HAZOP: AW-102, C-106, S-102, SX-114, SY-102, 242-T, Overground Transfers PHA: AZ-102/BX-109/SY-101/ITK WHAT IF: CCF, EE	102AW, 106C, 102S, 114SX, XS, BND, CRN, ITK, RAD, VEH, EE, CCF,I-242T,OGT
241-SX-107	Single-shell tank, high heat load, active ventilation	HAZOP: AW-102, C-106, S-102, SX-114, SY-102, 242-T, Overground Transfers PHA: AZ-102/BX-109/SY-101/ITK WHAT IF: CCF, EE	102AW, 106C, 102S, 114SX, XS, BND, CRN, ITK, RAD, VEH, EE, CCF,I-242T,OGT

Table 5.2-3. Applicable Hazard Evaluations for Tank Waste Remediation System Facilities. (30 sheets)

241-SX-108	Single-shell tank, high heat load, active ventilation	HAZOP: AW-102, C-106, S-102, SX-114, SY-102, 242-T, Overground Transfers PHA: AZ-102/BX-109/SY-101/ITK WHAT IF: CCF, EE	102AW, 106C, 102S, 114SX, XS, BND, CRN, ITK, RAD, VEH, EE, CCF,I-242T,OGT
241-SX-109	Single-shell tank, high heat load, active ventilation	HAZOP: AW-102, C-106, S-102, SX-114, SY-102, 242-T, Overground Transfers PHA: AZ-102/BX-109/SY-101/ITK WHAT IF: CCF, EE	102AW, 106C, 102S, 114SX, XS, BND, CRN, ITK, RAD, VEH, EE, CCF,I-242T,OGT
241-SX-110	Single-shell tank, high heat load, active ventilation	HAZOP: AW-102, C-106, S-102, SX-114, SY-102, 242-T, Overground Transfers PHA: AZ-102/BX-109/SY-101/ITK WHAT IF: CCF, EE	102AW, 106C, 102S, 114SX, XS, BND, CRN, ITK, RAD, VEH, EE, CCF,I-242T,OGT
241-SX-111	Single-shell tank, high heat load, active ventilation	HAZOP: AW-102, C-106, S-102, SX-114, SY-102, 242-T, Overground Transfers PHA: AZ-102/BX-109/SY-101/ITK WHAT IF: CCF, EE	102AW, 106C, 102S, 114SX, XS, BND, CRN, ITK, RAD, VEH, EE, CCF,I-242T,OGT
241-SX-112	Single-shell tank, high heat load, active ventilation	HAZOP: AW-102, C-106, S-102, SX-114, SY-102, 242-T, Overground Transfers PHA: AZ-102/BX-109/SY-101/ITK WHAT IF: CCF, EE	102AW, 106C, 102S, 114SX, XS, BND, CRN, ITK, RAD, VEH, EE, CCF,I-242T,OGT
241-SX-113	Single-shell tank	HAZOP: AW-102, C-106, S-102, SX-114, SY-102, 242-T, Overground Transfers PHA: AZ-102/BX-109/SY-101/ITK WHAT IF: CCF, EE	102AW, 106C, 102S, 114SX, XS, BND, CRN, ITK, RAD, VEH, EE, CCF,I-242T,OGT
241-SX-114	Single-shell tank, dry crust, high heat load, active ventilation	HAZOP: AW-102, C-106, S-102, SX-114, SY-102, 242-T, Overground Transfers PHA: AZ-102/BX-109/SY-101/ITK WHAT IF: CCF, EE	102AW, 106C, 102S, 114SX, XS, BND, CRN, ITK, RAD, VEH, EE, CCF,I-242T,OGT
241-SX-115	Single-shell tank	HAZOP: AW-102, C-106, S-102, SX-114, SY-102, 242-T, Overground Transfers PHA: AZ-102/BX-109/SY-101/ITK WHAT IF: CCF, EE	102AW, 106C, 102S, 114SX, XS, BND, CRN, ITK, RAD, VEH, EE, CCF,I-242T,OGT
241-SX-151	Diversion box	HAZOP: 222-S, 242-A, 242-S, 242-T, AW-102, C-106, S-102, SX-114, SY-102, B Plant, T Plant, U Plant, PFP, PUREX, Overground Transfers PHA: AZ-102/BX-109/SY-101	I-222S, I-242A, I-242S, I-242T, 102AW, 106C, 102S, 114SX, W058, XS, I-BPLANT, I-UPLANT, I-TPLANT, I-PFP, I-PUREX, OGT, CVR
241-SX-152	Diversion box	HAZOP: 222-S, 242-A, 242-S, 242-T, AW-102, C-106, S-102, SX-114, SY-102, B Plant, T Plant, U Plant, PFP, PUREX, Overground Transfers PHA: AZ-102/BX-109/SY-101	I-222S, I-242A, I-242S, I-242T, 102AW, 106C, 102S, 114SX, W058, XS, I-BPLANT, I-UPLANT, I-TPLANT, I-PFP, I-PUREX, OGT, CVR
241-SX-A	Valve pit	HAZOP: 222-S, 242-A, 242-S, 242-T, AW-102, C-106, S-102, SX-114, SY-102, B Plant, T Plant, U Plant, PFP, PUREX, Overground Transfers PHA: AZ-102/BX-109/SY-101	I-222S, I-242A, I-242S, I-242T, 102AW, 106C, 102S, 114SX, W058, XS, I-BPLANT, I-UPLANT, I-TPLANT, I-PFP, I-PUREX, OGT, CVR
241-SX-B	Valve pit	HAZOP: 222-S, 242-A, 242-S, 242-T, AW-102, C-106, S-102, SX-114, SY-102, B Plant, T Plant, U Plant, PFP, PUREX, Overground Transfers PHA: AZ-102/BX-109/SY-101	I-222S, I-242A, I-242S, I-242T, 102AW, 106C, 102S, 114SX, W058, XS, I-BPLANT, I-UPLANT, I-TPLANT, I-PFP, I-PUREX, OGT, CVR

Table 5.2-3. Applicable Hazard Evaluations for Tank Waste Remediation System Facilities. (30 sheets)

241-SY TANK FARM			
241-SY-A	Valve pit	HAZOP: 222-S, 242-A, 242-S, 242-T, AW-102, C-106, S-102, SX-114, SY-102, B Plant, T Plant, U Plant, PFP, PUREX, Overground Transfers PHA: AZ-102/BX-109/SY-101	I-222S, I-242A, I-242S, I-242T, 102AW, 106C, 102S, 114SX, W058, XS, I-BPLANT, I-UPLANT, I-TPLANT, I-PFP, I-PUREX, OGT, CVR
241-SY-B	Valve pit	HAZOP: 222-S, 242-A, 242-S, 242-T, AW-102, C-106, S-102, SX-114, SY-102, B Plant, T Plant, U Plant, PFP, PUREX, Overground Transfers PHA: AZ-102/BX-109/SY-101	I-222S, I-242A, I-242S, I-242T, 102AW, 106C, 102S, 114SX, W058, XS, I-BPLANT, I-UPLANT, I-TPLANT, I-PFP, I-PUREX, OGT, CVR
241-SY-COB-1	Cleanout box	PHA: COB	COB
241-SY-COB-2	Cleanout box	PHA: COB	COB
241-SY-COB-3	Cleanout box	PHA: COB	COB
241-SY-COB-4	Cleanout box	PHA: COB	COB
241-SY-COB-5	Cleanout box	PHA: COB	COB
241-SY-COB-6	Cleanout box	PHA: COB	COB
241-SY-101	Double-shell tank, flammable gas, active transfer/mixer pumps, active ventilation	HAZOP: AW-102, C-106, S-102, SX-114, SY-102,222-S, 242-A, 242-S, AW-102, PFP, PUREX, B Plant, T Plant PHA: AZ-102/BX-109/SY-101/ITK WHAT IF: CCF, EE	102AW, 106C, 102S, 114SX, XS, BND, CRN, ITK, RAD, VEH, EE, CCF,I-222S, I-242A, I-242S, 102AW, I-PFP, I-PUREX, I-BPLANT, I-TPLANT
241-SY-102	Double-shell tank, active transfer/mixer pumps, active ventilation	HAZOP: AW-102, C-106, S-102, SX-114, SY-102,222-S, 242-A, 242-S, AW-102, PFP, PUREX, B Plant, T Plant PHA: AZ-102/BX-109/SY-101/ITK WHAT IF: CCF, EE	102AW, 106C, 102S, 114SX, XS, BND, CRN, ITK, RAD, VEH, EE, CCF,I-222S, I-242A, I-242S, 102AW, I-PFP, I-PUREX, I-BPLANT, I-TPLANT
241-SY-103	Double-shell tank, active ventilation	HAZOP: AW-102, C-106, S-102, SX-114, SY-102,222-S, 242-A, 242-S, AW-102, PFP, PUREX, B Plant, T Plant PHA: AZ-102/BX-109/SY-101/ITK WHAT IF: CCF, EE	102AW, 106C, 102S, 114SX, XS, BND, CRN, ITK, RAD, VEH, EE, CCF,I-222S, I-242A, I-242S, 102AW, I-PFP, I-PUREX, I-BPLANT, I-TPLANT
241-T TANK FARM			
216-T-1	Ditch	PHA: CDP	CDP
216-T-32	Crib	PHA: CDP	CDP
216-T-4-2	Ditch	PHA: CDP	CDP
216-T-7	Crib	PHA: CDP	CDP
240-T-151	Diversion box	HAZOP: 222-S, 242-A, 242-S, 242-T, AW-102, C-106, S-102, SX-114, SY-102, B Plant, T Plant, U Plant, PFP, PUREX, Overground Transfers PHA: AZ-102/BX-109/SY-101	I-222S, I-242A, I-242S, I-242T, 102AW, 106C, 102S, 114SX, W058, XS, I-BPLANT, I-UPLANT, I-TPLANT, I-PFP, I-PUREX, OGT, CVR
240-T-152	Diversion box	HAZOP: 222-S, 242-A, 242-S, 242-T, AW-102, C-106, S-102, SX-114, SY-102, B Plant, T Plant, U Plant, PFP, PUREX, Overground Transfers PHA: AZ-102/BX-109/SY-101	I-222S, I-242A, I-242S, I-242T, 102AW, 106C, 102S, 114SX, W058, XS, I-BPLANT, I-UPLANT, I-TPLANT, I-PFP, I-PUREX, OGT, CVR
240-T-153	Diversion box	HAZOP: 222-S, 242-A, 242-S, 242-T, AW-102, C-106, S-102, SX-114, SY-102, B Plant, T Plant, U Plant, PFP, PUREX, Overground Transfers PHA: AZ-102/BX-109/SY-101	I-222S, I-242A, I-242S, I-242T, 102AW, 106C, 102S, 114SX, W058, XS, I-BPLANT, I-UPLANT, I-TPLANT, I-PFP, I-PUREX, OGT, CVR

Table 5.2-3. Applicable Hazard Evaluations for Tank Waste Remediation System Facilities. (30 sheets)

240-T-252	Diversion box	HAZOP: 222-S, 242-A, 242-S, 242-T, AW-102, C-106, S-102, SX-114, SY-102, B Plant, T Plant, U Plant, PFP, PUREX, Overground Transfers PHA: AZ-102/BX-109/SY-101	I-222S, I-242A, I-242S, I-242T, 102AW, 106C, 102S, 114SX, W058, XS, I-BPLANT, I-UPLANT, I-TPLANT, I-PFP, I-PUREX, OGT, CVR
240-TR-152	Diversion box	HAZOP: 222-S, 242-A, 242-S, 242-T, AW-102, C-106, S-102, SX-114, SY-102, B Plant, T Plant, U Plant, PFP, PUREX, Overground Transfers PHA: AZ-102/BX-109/SY-101	I-222S, I-242A, I-242S, I-242T, 102AW, 106C, 102S, 114SX, W058, XS, I-BPLANT, I-UPLANT, I-TPLANT, I-PFP, I-PUREX, OGT, CVR
240-TR-153	Diversion box	HAZOP: 222-S, 242-A, 242-S, 242-T, AW-102, C-106, S-102, SX-114, SY-102, B Plant, T Plant, U Plant, PFP, PUREX, Overground Transfers PHA: AZ-102/BX-109/SY-101	I-222S, I-242A, I-242S, I-242T, 102AW, 106C, 102S, 114SX, W058, XS, I-BPLANT, I-UPLANT, I-TPLANT, I-PFP, I-PUREX, OGT, CVR
241-T-101	Single-shell tank	HAZOP: AW-102, C-106, S-102, SX-114, SY-102, 242-T, Overground Transfers PHA: AZ-102/BX-109/SY-101/ITK WHAT IF: CCF, EE	102AW, 106C, 102S, 114SX, XS, BND, CRN, ITK, RAD, VEH, EE, CCF,I-242T,OGT
241-T-102	Single-shell tank	HAZOP: AW-102, C-106, S-102, SX-114, SY-102, 242-T, Overground Transfers PHA: AZ-102/BX-109/SY-101/ITK WHAT IF: CCF, EE	102AW, 106C, 102S, 114SX, XS, BND, CRN, ITK, RAD, VEH, EE, CCF,I-242T,OGT
241-T-103	Single-shell tank	HAZOP: AW-102, C-106, S-102, SX-114, SY-102, 242-T, Overground Transfers PHA: AZ-102/BX-109/SY-101/ITK WHAT IF: CCF, EE	102AW, 106C, 102S, 114SX, XS, BND, CRN, ITK, RAD, VEH, EE, CCF,I-242T,OGT
241-T-104	Single-shell tank	HAZOP: AW-102, C-106, S-102, SX-114, SY-102, 242-T, Overground Transfers PHA: AZ-102/BX-109/SY-101/ITK WHAT IF: CCF, EE	102AW, 106C, 102S, 114SX, XS, BND, CRN, ITK, RAD, VEH, EE, CCF,I-242T,OGT
241-T-105	Single-shell tank	HAZOP: AW-102, C-106, S-102, SX-114, SY-102, 242-T, Overground Transfers PHA: AZ-102/BX-109/SY-101/ITK WHAT IF: CCF, EE	102AW, 106C, 102S, 114SX, XS, BND, CRN, ITK, RAD, VEH, EE, CCF,I-242T,OGT
241-T-106	Single-shell tank	HAZOP: AW-102, C-106, S-102, SX-114, SY-102, 242-T, Overground Transfers PHA: AZ-102/BX-109/SY-101/ITK WHAT IF: CCF, EE	102AW, 106C, 102S, 114SX, XS, BND, CRN, ITK, RAD, VEH, EE, CCF,I-242T,OGT
241-T-107	Single-shell tank, ferrocyanide	HAZOP: AW-102, C-106, S-102, SX-114, SY-102, 242-T, Overground Transfers PHA: AZ-102/BX-109/SY-101/ITK WHAT IF: CCF, EE	102AW, 106C, 102S, 114SX, XS, BND, CRN, ITK, RAD, VEH, EE, CCF,I-242T,OGT
241-T-108	Single-shell tank	HAZOP: AW-102, C-106, S-102, SX-114, SY-102, 242-T, Overground Transfers PHA: AZ-102/BX-109/SY-101/ITK WHAT IF: CCF, EE	102AW, 106C, 102S, 114SX, XS, BND, CRN, ITK, RAD, VEH, EE, CCF,I-242T,OGT
241-T-109	Single-shell tank	HAZOP: AW-102, C-106, S-102, SX-114, SY-102, 242-T, Overground Transfers PHA: AZ-102/BX-109/SY-101/ITK WHAT IF: CCF, EE	102AW, 106C, 102S, 114SX, XS, BND, CRN, ITK, RAD, VEH, EE, CCF,I-242T,OGT

Table 5.2-3. Applicable Hazard Evaluations for Tank Waste Remediation System Facilities. (30 sheets)

241-T-110	Single-shell tank, flammable gas	HAZOP: AW-102, C-106, S-102, SX-114, SY-102, 242-T, Overground Transfers PHA: AZ-102/BX-109/SY-101/ITK WHAT IF: CCF, EE	102AW, 106C, 102S, 114SX, XS, BND, CRN, ITK, RAD, VEH, EE, CCF,I-242T,OGT
241-T-111	Single-shell tank, organics	HAZOP: AW-102, C-106, S-102, SX-114, SY-102, 242-T, Overground Transfers PHA: AZ-102/BX-109/SY-101/ITK WHAT IF: CCF, EE	102AW, 106C, 102S, 114SX, XS, BND, CRN, ITK, RAD, VEH, EE, CCF,I-242T,OGT
241-T-112	Single-shell tank	HAZOP: AW-102, C-106, S-102, SX-114, SY-102, 242-T, Overground Transfers PHA: AZ-102/BX-109/SY-101/ITK WHAT IF: CCF, EE	102AW, 106C, 102S, 114SX, XS, BND, CRN, ITK, RAD, VEH, EE, CCF,I-242T,OGT
241-T-151	Diversion box	HAZOP: 222-S, 242-A, 242-S, 242-T, AW-102, C-106, S-102, SX-114, SY-102, B Plant, T Plant, U Plant, PFP, PUREX, Overground Transfers PHA: AZ-102/BX-109/SY-101	I-222S, I-242A, I-242S, I-242T, 102AW, 106C, 102S, 114SX, W058, XS, I-BPLANT, I-UPLANT, I-TPLANT, I-PFP, I-PUREX, OGT, CVR
241-T-201	Single-shell tank	HAZOP: AW-102, C-106, S-102, SX-114, SY-102, 242-T, Overground Transfers PHA: AZ-102/BX-109/SY-101/ITK WHAT IF: CCF, EE	102AW, 106C, 102S, 114SX, XS, BND, CRN, ITK, RAD, VEH, EE, CCF,I-242T,OGT
241-T-202	Single-shell tank	HAZOP: AW-102, C-106, S-102, SX-114, SY-102, 242-T, Overground Transfers PHA: AZ-102/BX-109/SY-101/ITK WHAT IF: CCF, EE	102AW, 106C, 102S, 114SX, XS, BND, CRN, ITK, RAD, VEH, EE, CCF,I-242T,OGT
241-T-203	Single-shell tank	HAZOP: AW-102, C-106, S-102, SX-114, SY-102, 242-T, Overground Transfers PHA: AZ-102/BX-109/SY-101/ITK WHAT IF: CCF, EE	102AW, 106C, 102S, 114SX, XS, BND, CRN, ITK, RAD, VEH, EE, CCF,I-242T,OGT
241-T-204	Single-shell tank	HAZOP: AW-102, C-106, S-102, SX-114, SY-102, 242-T, Overground Transfers PHA: AZ-102/BX-109/SY-101/ITK WHAT IF: CCF, EE	102AW, 106C, 102S, 114SX, XS, BND, CRN, ITK, RAD, VEH, EE, CCF,I-242T,OGT
241-TX TANK FARM			
241-TX-101	Single-shell tank	HAZOP: AW-102, C-106, S-102, SX-114, SY-102, 242-T, Overground Transfers PHA: AZ-102/BX-109/SY-101/ITK WHAT IF: CCF, EE	102AW, 106C, 102S, 114SX, XS, BND, CRN, ITK, RAD, VEH, EE, CCF,I-242T,OGT
241-TX-102	Single-shell tank	HAZOP: AW-102, C-106, S-102, SX-114, SY-102, 242-T, Overground Transfers PHA: AZ-102/BX-109/SY-101/ITK WHAT IF: CCF, EE	102AW, 106C, 102S, 114SX, XS, BND, CRN, ITK, RAD, VEH, EE, CCF,I-242T,OGT
241-TX-103	Single-shell tank	HAZOP: AW-102, C-106, S-102, SX-114, SY-102, 242-T, Overground Transfers PHA: AZ-102/BX-109/SY-101/ITK WHAT IF: CCF, EE	102AW, 106C, 102S, 114SX, XS, BND, CRN, ITK, RAD, VEH, EE, CCF,I-242T,OGT
241-TX-104	Single-shell tank	HAZOP: AW-102, C-106, S-102, SX-114, SY-102, 242-T, Overground Transfers PHA: AZ-102/BX-109/SY-101/ITK WHAT IF: CCF, EE	102AW, 106C, 102S, 114SX, XS, BND, CRN, ITK, RAD, VEH, EE, CCF,I-242T,OGT

Table 5.2-3. Applicable Hazard Evaluations for Tank Waste Remediation System Facilities. (30 sheets)

241-TX-105	Single-shell tank, organics	HAZOP: AW-102, C-106, S-102, SX-114, SY-102, 242-T, Overground Transfers PHA: AZ-102/BX-109/SY-101/ITK WHAT IF: CCF, EE	102AW, 106C, 102S, 114SX, XS, BND, CRN, ITK, RAD, VEH, EE, CCF,I-242T,OGT
241-TX-106	Single-shell tank	HAZOP: AW-102, C-106, S-102, SX-114, SY-102, 242-T, Overground Transfers PHA: AZ-102/BX-109/SY-101/ITK WHAT IF: CCF, EE	102AW, 106C, 102S, 114SX, XS, BND, CRN, ITK, RAD, VEH, EE, CCF,I-242T,OGT
241-TX-107	Single-shell tank	HAZOP: AW-102, C-106, S-102, SX-114, SY-102, 242-T, Overground Transfers PHA: AZ-102/BX-109/SY-101/ITK WHAT IF: CCF, EE	102AW, 106C, 102S, 114SX, XS, BND, CRN, ITK, RAD, VEH, EE, CCF,I-242T,OGT
241-TX-108	Single-shell tank	HAZOP: AW-102, C-106, S-102, SX-114, SY-102, 242-T, Overground Transfers PHA: AZ-102/BX-109/SY-101/ITK WHAT IF: CCF, EE	102AW, 106C, 102S, 114SX, XS, BND, CRN, ITK, RAD, VEH, EE, CCF,I-242T,OGT
241-TX-109	Single-shell tank	HAZOP: AW-102, C-106, S-102, SX-114, SY-102, 242-T, Overground Transfers PHA: AZ-102/BX-109/SY-101/ITK WHAT IF: CCF, EE	102AW, 106C, 102S, 114SX, XS, BND, CRN, ITK, RAD, VEH, EE, CCF,I-242T,OGT
241-TX-110	Single-shell tank	HAZOP: AW-102, C-106, S-102, SX-114, SY-102, 242-T, Overground Transfers PHA: AZ-102/BX-109/SY-101/ITK WHAT IF: CCF, EE	102AW, 106C, 102S, 114SX, XS, BND, CRN, ITK, RAD, VEH, EE, CCF,I-242T,OGT
241-TX-111	Single-shell tank	HAZOP: AW-102, C-106, S-102, SX-114, SY-102, 242-T, Overground Transfers PHA: AZ-102/BX-109/SY-101/ITK WHAT IF: CCF, EE	102AW, 106C, 102S, 114SX, XS, BND, CRN, ITK, RAD, VEH, EE, CCF,I-242T,OGT
241-TX-112	Single-shell tank	HAZOP: AW-102, C-106, S-102, SX-114, SY-102, 242-T, Overground Transfers PHA: AZ-102/BX-109/SY-101/ITK WHAT IF: CCF, EE	102AW, 106C, 102S, 114SX, XS, BND, CRN, ITK, RAD, VEH, EE, CCF,I-242T,OGT
241-TX-113	Single-shell tank	HAZOP: AW-102, C-106, S-102, SX-114, SY-102, 242-T, Overground Transfers PHA: AZ-102/BX-109/SY-101/ITK WHAT IF: CCF, EE	102AW, 106C, 102S, 114SX, XS, BND, CRN, ITK, RAD, VEH, EE, CCF,I-242T,OGT
241-TX-114	Single-shell tank	HAZOP: AW-102, C-106, S-102, SX-114, SY-102, 242-T, Overground Transfers PHA: AZ-102/BX-109/SY-101/ITK WHAT IF: CCF, EE	102AW, 106C, 102S, 114SX, XS, BND, CRN, ITK, RAD, VEH, EE, CCF,I-242T,OGT
241-TX-115	Single-shell tank	HAZOP: AW-102, C-106, S-102, SX-114, SY-102, 242-T, Overground Transfers PHA: AZ-102/BX-109/SY-101/ITK WHAT IF: CCF, EE	102AW, 106C, 102S, 114SX, XS, BND, CRN, ITK, RAD, VEH, EE, CCF,I-242T,OGT
241-TX-116	Single-shell tank	HAZOP: AW-102, C-106, S-102, SX-114, SY-102, 242-T, Overground Transfers PHA: AZ-102/BX-109/SY-101/ITK WHAT IF: CCF, EE	102AW, 106C, 102S, 114SX, XS, BND, CRN, ITK, RAD, VEH, EE, CCF,I-242T,OGT

Table 5.2-3. Applicable Hazard Evaluations for Tank Waste Remediation System Facilities. (30 sheets)

241-TX-117	Single-shell tank	HAZOP: AW-102, C-106, S-102, SX-114, SY-102, 242-T, Overground Transfers PHA: AZ-102/BX-109/SY-101/ITK WHAT IF: CCF, EE	102AW, 106C, 102S, 114SX, XS, BND, CRN, ITK, RAD, VEH, EE, CCF,I-242T,OGT
241-TX-118	Single-shell tank, ferrocyanide	HAZOP: AW-102, C-106, S-102, SX-114, SY-102, 242-T, Overground Transfers PHA: AZ-102/BX-109/SY-101/ITK WHAT IF: CCF, EE	102AW, 106C, 102S, 114SX, XS, BND, CRN, ITK, RAD, VEH, EE, CCF,I-242T,OGT
241-TX-152	Diversion box	HAZOP: 222-S, 242-A, 242-S, 242-T, AW-102, C-106, S-102, SX-114, SY-102, B Plant, T Plant, U Plant, PFP, PUREX, Overground Transfers PHA: AZ-102/BX-109/SY-101	I-222S, I-242A, I-242S, I-242T, 102AW, 106C, 102S, 114SX, W058, XS, I-BPLANT, I-UPLANT, I-TPLANT, I-PFP, I-PUREX, OGT, CVR
241-TX-153	Diversion box	HAZOP: 222-S, 242-A, 242-S, 242-T, AW-102, C-106, S-102, SX-114, SY-102, B Plant, T Plant, U Plant, PFP, PUREX, Overground Transfers PHA: AZ-102/BX-109/SY-101	I-222S, I-242A, I-242S, I-242T, 102AW, 106C, 102S, 114SX, W058, XS, I-BPLANT, I-UPLANT, I-TPLANT, I-PFP, I-PUREX, OGT, CVR
241-TX-154	Diversion box	HAZOP: 222-S, 242-A, 242-S, 242-T, AW-102, C-106, S-102, SX-114, SY-102, B Plant, T Plant, U Plant, PFP, PUREX, Overground Transfers PHA: AZ-102/BX-109/SY-101	I-222S, I-242A, I-242S, I-242T, 102AW, 106C, 102S, 114SX, W058, XS, I-BPLANT, I-UPLANT, I-TPLANT, I-PFP, I-PUREX, OGT, CVR
241-TX-155	Diversion box	HAZOP: 222-S, 242-A, 242-S, 242-T, AW-102, C-106, S-102, SX-114, SY-102, B Plant, T Plant, U Plant, PFP, PUREX, Overground Transfers PHA: AZ-102/BX-109/SY-101	I-222S, I-242A, I-242S, I-242T, 102AW, 106C, 102S, 114SX, W058, XS, I-BPLANT, I-UPLANT, I-TPLANT, I-PFP, I-PUREX, OGT, CVR
241-TXR-151	Diversion box	HAZOP: 222-S, 242-A, 242-S, 242-T, AW-102, C-106, S-102, SX-114, SY-102, B Plant, T Plant, U Plant, PFP, PUREX, Overground Transfers PHA: AZ-102/BX-109/SY-101	I-222S, I-242A, I-242S, I-242T, 102AW, 106C, 102S, 114SX, W058, XS, I-BPLANT, I-UPLANT, I-TPLANT, I-PFP, I-PUREX, OGT, CVR
241-TXR-152	Diversion box	HAZOP: 222-S, 242-A, 242-S, 242-T, AW-102, C-106, S-102, SX-114, SY-102, B Plant, T Plant, U Plant, PFP, PUREX, Overground Transfers PHA: AZ-102/BX-109/SY-101	I-222S, I-242A, I-242S, I-242T, 102AW, 106C, 102S, 114SX, W058, XS, I-BPLANT, I-UPLANT, I-TPLANT, I-PFP, I-PUREX, OGT, CVR
241-TXR-153	Diversion box	HAZOP: 222-S, 242-A, 242-S, 242-T, AW-102, C-106, S-102, SX-114, SY-102, B Plant, T Plant, U Plant, PFP, PUREX, Overground Transfers PHA: AZ-102/BX-109/SY-101	I-222S, I-242A, I-242S, I-242T, 102AW, 106C, 102S, 114SX, W058, XS, I-BPLANT, I-UPLANT, I-TPLANT, I-PFP, I-PUREX, OGT, CVR
241-TX-302C	Catch tank	HAZOP: AW-102, C-106, S-102, SX-114, SY-102 PHA: AZ-102/BX-109/SY-101 WHAT IF: CCF, EE	102AW, 106C, 102S, 114SX, XS, BND, CRN, ITK, RAD, VEH, EE, CCF

Table 5.2-3. Applicable Hazard Evaluations for Tank Waste Remediation System Facilities. (30 sheets)

241-TY TANK FARM			
241-TY-101	Single-shell tank, ferrocyanide	HAZOP: AW-102, C-106, S-102, SX-114, SY-102, 242-T, Overground Transfers PHA: AZ-102/BX-109/SY-101/ITK WHAT IF: CCF, EE	102AW, 106C, 102S, 114SX, XS, BND, CRN, ITK, RAD, VEH, EE, CCF,I-242T,OGT
241-TY-102	Single-shell tank	HAZOP: AW-102, C-106, S-102, SX-114, SY-102, 242-T, Overground Transfers PHA: AZ-102/BX-109/SY-101/ITK WHAT IF: CCF, EE	102AW, 106C, 102S, 114SX, XS, BND, CRN, ITK, RAD, VEH, EE, CCF,I-242T,OGT
241-TY-103	Single-shell tank, ferrocyanide	HAZOP: AW-102, C-106, S-102, SX-114, SY-102, 242-T, Overground Transfers PHA: AZ-102/BX-109/SY-101/ITK WHAT IF: CCF, EE	102AW, 106C, 102S, 114SX, XS, BND, CRN, ITK, RAD, VEH, EE, CCF,I-242T,OGT
241-TY-104	Single-shell tank, ferrocyanide	HAZOP: AW-102, C-106, S-102, SX-114, SY-102, 242-T, Overground Transfers PHA: AZ-102/BX-109/SY-101/ITK WHAT IF: CCF, EE	102AW, 106C, 102S, 114SX, XS, BND, CRN, ITK, RAD, VEH, EE, CCF,I-242T,OGT
241-TY-105	Single-shell tank	HAZOP: AW-102, C-106, S-102, SX-114, SY-102, 242-T, Overground Transfers PHA: AZ-102/BX-109/SY-101/ITK WHAT IF: CCF, EE	102AW, 106C, 102S, 114SX, XS, BND, CRN, ITK, RAD, VEH, EE, CCF,I-242T,OGT
241-TY-106	Single-shell tank	HAZOP: AW-102, C-106, S-102, SX-114, SY-102, 242-T, Overground Transfers PHA: AZ-102/BX-109/SY-101/ITK WHAT IF: CCF, EE	102AW, 106C, 102S, 114SX, XS, BND, CRN, ITK, RAD, VEH, EE, CCF,I-242T,OGT
241-U TANK FARM			
216-U-12	Crib	PHA: CDP	CDP
216-U-14	Ditch	PHA: CDP	CDP
216-U-17	Crib	PHA: CDP	CDP
241-U-A	Valve pit	HAZOP: 222-S, 242-A, 242-S, 242-T, AW-102, C-106, S-102, SX-114, SY-102, B Plant, T Plant, U Plant, PFP, PUREX, Overground Transfers PHA: AZ-102/BX-109/SY-101	I-222S, I-242A, I-242S, I-242T, 102AW, 106C, 102S, 114SX, W058, XS, I-BPLANT, I-UPLANT, I-TPLANT, I-PFP, I-PUREX, OGT, CVR
241-U-B	Valve pit	HAZOP: 222-S, 242-A, 242-S, 242-T, AW-102, C-106, S-102, SX-114, SY-102, B Plant, T Plant, U Plant, PFP, PUREX, Overground Transfers PHA: AZ-102/BX-109/SY-101	I-222S, I-242A, I-242S, I-242T, 102AW, 106C, 102S, 114SX, W058, XS, I-BPLANT, I-UPLANT, I-TPLANT, I-PFP, I-PUREX, OGT, CVR
241-U-C	Valve pit	HAZOP: 222-S, 242-A, 242-S, 242-T, AW-102, C-106, S-102, SX-114, SY-102, B Plant, T Plant, U Plant, PFP, PUREX, Overground Transfers PHA: AZ-102/BX-109/SY-101	I-222S, I-242A, I-242S, I-242T, 102AW, 106C, 102S, 114SX, W058, XS, I-BPLANT, I-UPLANT, I-TPLANT, I-PFP, I-PUREX, OGT, CVR
241-U-D	Valve pit	HAZOP: 222-S, 242-A, 242-S, 242-T, AW-102, C-106, S-102, SX-114, SY-102, B Plant, T Plant, U Plant, PFP, PUREX, Overground Transfers PHA: AZ-102/BX-109/SY-101	I-222S, I-242A, I-242S, I-242T, 102AW, 106C, 102S, 114SX, W058, XS, I-BPLANT, I-UPLANT, I-TPLANT, I-PFP, I-PUREX, OGT, CVR

Table 5.2-3. Applicable Hazard Evaluations for Tank Waste Remediation System Facilities. (30 sheets)

241-U-101	Single-shell tank	HAZOP: AW-102, C-106, S-102, SX-114, SY-102, 242-T, Overground Transfers PHA: AZ-102/BX-109/SY-101/ITK WHAT IF: CCF, EE	102AW, 106C, 102S, 114SX, XS, BND, CRN, ITK, RAD, VEH, EE, CCF,I-242T,OGT
241-U-102	Single-shell tank	HAZOP: AW-102, C-106, S-102, SX-114, SY-102, 242-T, Overground Transfers PHA: AZ-102/BX-109/SY-101/ITK WHAT IF: CCF, EE	102AW, 106C, 102S, 114SX, XS, BND, CRN, ITK, RAD, VEH, EE, CCF,I-242T,OGT
241-U-103	Single-shell tank, flammable gas, organics	HAZOP: AW-102, C-106, S-102, SX-114, SY-102, 242-T, Overground Transfers PHA: AZ-102/BX-109/SY-101/ITK WHAT IF: CCF, EE	102AW, 106C, 102S, 114SX, XS, BND, CRN, ITK, RAD, VEH, EE, CCF,I-242T,OGT
241-U-104	Single-shell tank	HAZOP: AW-102, C-106, S-102, SX-114, SY-102, 242-T, Overground Transfers PHA: AZ-102/BX-109/SY-101/ITK WHAT IF: CCF, EE	102AW, 106C, 102S, 114SX, XS, BND, CRN, ITK, RAD, VEH, EE, CCF,I-242T,OGT
241-U-105	Single-shell tank, flammable gas, organics	HAZOP: AW-102, C-106, S-102, SX-114, SY-102, 242-T, Overground Transfers PHA: AZ-102/BX-109/SY-101/ITK WHAT IF: CCF, EE	102AW, 106C, 102S, 114SX, XS, BND, CRN, ITK, RAD, VEH, EE, CCF,I-242T,OGT
241-U-106	Single-shell tank, organics	HAZOP: AW-102, C-106, S-102, SX-114, SY-102, 242-T, Overground Transfers PHA: AZ-102/BX-109/SY-101/ITK WHAT IF: CCF, EE	102AW, 106C, 102S, 114SX, XS, BND, CRN, ITK, RAD, VEH, EE, CCF,I-242T,OGT
241-U-107	Single-shell tank, flammable gas, organics	HAZOP: AW-102, C-106, S-102, SX-114, SY-102, 242-T, Overground Transfers PHA: AZ-102/BX-109/SY-101/ITK WHAT IF: CCF, EE	102AW, 106C, 102S, 114SX, XS, BND, CRN, ITK, RAD, VEH, EE, CCF,I-242T,OGT
241-U-108	Single-shell tank, flammable gas	HAZOP: AW-102, C-106, S-102, SX-114, SY-102, 242-T, Overground Transfers PHA: AZ-102/BX-109/SY-101/ITK WHAT IF: CCF, EE	102AW, 106C, 102S, 114SX, XS, BND, CRN, ITK, RAD, VEH, EE, CCF,I-242T,OGT
241-U-109	Single-shell tank, flammable gas	HAZOP: AW-102, C-106, S-102, SX-114, SY-102, 242-T, Overground Transfers PHA: AZ-102/BX-109/SY-101/ITK WHAT IF: CCF, EE	102AW, 106C, 102S, 114SX, XS, BND, CRN, ITK, RAD, VEH, EE, CCF,I-242T,OGT
241-U-110	Single-shell tank	HAZOP: AW-102, C-106, S-102, SX-114, SY-102, 242-T, Overground Transfers PHA: AZ-102/BX-109/SY-101/ITK WHAT IF: CCF, EE	102AW, 106C, 102S, 114SX, XS, BND, CRN, ITK, RAD, VEH, EE, CCF,I-242T,OGT
241-U-111	Single-shell tank, organics	HAZOP: AW-102, C-106, S-102, SX-114, SY-102, 242-T, Overground Transfers PHA: AZ-102/BX-109/SY-101/ITK WHAT IF: CCF, EE	102AW, 106C, 102S, 114SX, XS, BND, CRN, ITK, RAD, VEH, EE, CCF,I-242T,OGT
241-U-112	Single-shell tank	HAZOP: AW-102, C-106, S-102, SX-114, SY-102, 242-T, Overground Transfers PHA: AZ-102/BX-109/SY-101/ITK WHAT IF: CCF, EE	102AW, 106C, 102S, 114SX, XS, BND, CRN, ITK, RAD, VEH, EE, CCF,I-242T,OGT

Table 5.2-3. Applicable Hazard Evaluations for Tank Waste Remediation System Facilities. (30 sheets)

241-U-151	Diversion box	HAZOP: 222-S, 242-A, 242-S, 242-T, AW-102, C-106, S-102, SX-114, SY-102, B Plant, T Plant, U Plant, PFP, PUREX, Overground Transfers PHA: AZ-102/BX-109/SY-101	I-222S, I-242A, I-242S, I-242T, 102AW, 106C, 102S, 114SX, W058, XS, I-BPLANT, I-UPLANT, I-TPLANT, I-PFP, I-PUREX, OGT, CVR
241-U-152	Diversion box	HAZOP: 222-S, 242-A, 242-S, 242-T, AW-102, C-106, S-102, SX-114, SY-102, B Plant, T Plant, U Plant, PFP, PUREX, Overground Transfers PHA: AZ-102/BX-109/SY-101	I-222S, I-242A, I-242S, I-242T, 102AW, 106C, 102S, 114SX, W058, XS, I-BPLANT, I-UPLANT, I-TPLANT, I-PFP, I-PUREX, OGT, CVR
241-U-153	Diversion box	HAZOP: 222-S, 242-A, 242-S, 242-T, AW-102, C-106, S-102, SX-114, SY-102, B Plant, T Plant, U Plant, PFP, PUREX, Overground Transfers PHA: AZ-102/BX-109/SY-101	I-222S, I-242A, I-242S, I-242T, 102AW, 106C, 102S, 114SX, W058, XS, I-BPLANT, I-UPLANT, I-TPLANT, I-PFP, I-PUREX, OGT, CVR
241-U-154	Diversion box	HAZOP: 222-S, 242-A, 242-S, 242-T, AW-102, C-106, S-102, SX-114, SY-102, B Plant, T Plant, U Plant, PFP, PUREX, Overground Transfers PHA: AZ-102/BX-109/SY-101	I-222S, I-242A, I-242S, I-242T, 102AW, 106C, 102S, 114SX, W058, XS, I-BPLANT, I-UPLANT, I-TPLANT, I-PFP, I-PUREX, OGT, CVR
241-U-201	Single-shell tank	HAZOP: AW-102, C-106, S-102, SX-114, SY-102, 242-T, Overground Transfers PHA: AZ-102/BX-109/SY-101/ITK WHAT IF: CCF, EE	102AW, 106C, 102S, 114SX, XS, BND, CRN, ITK, RAD, VEH, EE, CCF,I-242T,OGT
241-U-202	Single-shell tank	HAZOP: AW-102, C-106, S-102, SX-114, SY-102, 242-T, Overground Transfers PHA: AZ-102/BX-109/SY-101/ITK WHAT IF: CCF, EE	102AW, 106C, 102S, 114SX, XS, BND, CRN, ITK, RAD, VEH, EE, CCF,I-242T,OGT
241-U-203	Single-shell tank, organics	HAZOP: AW-102, C-106, S-102, SX-114, SY-102, 242-T, Overground Transfers PHA: AZ-102/BX-109/SY-101/ITK WHAT IF: CCF, EE	102AW, 106C, 102S, 114SX, XS, BND, CRN, ITK, RAD, VEH, EE, CCF,I-242T,OGT
241-U-204	Single-shell tank, organics	HAZOP: AW-102, C-106, S-102, SX-114, SY-102, 242-T, Overground Transfers PHA: AZ-102/BX-109/SY-101/ITK WHAT IF: CCF, EE	102AW, 106C, 102S, 114SX, XS, BND, CRN, ITK, RAD, VEH, EE, CCF,I-242T,OGT
241-U-252	Diversion box	HAZOP: 222-S, 242-A, 242-S, 242-T, AW-102, C-106, S-102, SX-114, SY-102, B Plant, T Plant, U Plant, PFP, PUREX, Overground Transfers PHA: AZ-102/BX-109/SY-101	I-222S, I-242A, I-242S, I-242T, 102AW, 106C, 102S, 114SX, W058, XS, I-BPLANT, I-UPLANT, I-TPLANT, I-PFP, I-PUREX, OGT, CVR
241-U-3018	Catch tank	HAZOP: AW-102, C-106, S-102, SX-114, SY-102 PHA: AZ-102/BX-109/SY-101 WHAT IF: CCF, EE	102AW, 106C, 102S, 114SX, XS, BND, CRN, ITK, RAD, VEH, EE, CCF
241-UR-151	Diversion box	HAZOP: 222-S, 242-A, 242-S, 242-T, AW-102, C-106, S-102, SX-114, SY-102, B Plant, T Plant, U Plant, PFP, PUREX, Overground Transfers PHA: AZ-102/BX-109/SY-101	I-222S, I-242A, I-242S, I-242T, 102AW, 106C, 102S, 114SX, W058, XS, I-BPLANT, I-UPLANT, I-TPLANT, I-PFP, I-PUREX, OGT, CVR

Table 5.2-3. Applicable Hazard Evaluations for Tank Waste Remediation System Facilities. (30 sheets)

241-UR-152	Diversion box	HAZOP: 222-S, 242-A, 242-S, 242-T, AW-102, C-106, S-102, SX-114, SY-102, B Plant, T Plant, U Plant, PFP, PUREX, Overground Transfers PHA: AZ-102/BX-109/SY-101	I-222S, I-242A, I-242S, I-242T, 102AW, 106C, 102S, 114SX, W058, XS, I-BPLANT, I-UPLANT, I-TPLANT, I-PFP, I-PUREX, OGT, CVR
241-UR-153	Diversion box	HAZOP: 222-S, 242-A, 242-S, 242-T, AW-102, C-106, S-102, SX-114, SY-102, B Plant, T Plant, U Plant, PFP, PUREX, Overground Transfers PHA: AZ-102/BX-109/SY-101	I-222S, I-242A, I-242S, I-242T, 102AW, 106C, 102S, 114SX, W058, XS, I-BPLANT, I-UPLANT, I-TPLANT, I-PFP, I-PUREX, OGT, CVR
241-UR-154	Diversion box	HAZOP: 222-S, 242-A, 242-S, 242-T, AW-102, C-106, S-102, SX-114, SY-102, B Plant, T Plant, U Plant, PFP, PUREX, Overground Transfers PHA: AZ-102/BX-109/SY-101	I-222S, I-242A, I-242S, I-242T, 102AW, 106C, 102S, 114SX, W058, XS, I-BPLANT, I-UPLANT, I-TPLANT, I-PFP, I-PUREX, OGT, CVR
241-UX-154	Diversion box	HAZOP: 222-S, 242-A, 242-S, 242-T, AW-102, C-106, S-102, SX-114, SY-102, B Plant, T Plant, U Plant, PFP, PUREX, Overground Transfers PHA: AZ-102/BX-109/SY-101	I-222S, I-242A, I-242S, I-242T, 102AW, 106C, 102S, 114SX, W058, XS, I-BPLANT, I-UPLANT, I-TPLANT, I-PFP, I-PUREX, OGT, CVR
241-UX-302A	Catch tank	HAZOP: AW-102, C-106, S-102, SX-114, SY-102 PHA: AZ-102/BX-109/SY-101 WHAT IF: CCF, EE	102AW, 106C, 102S, 114SX, XS, BND, CRN, ITK, RAD, VEH, EE, CCF
DCRTs, CATCH TANKS, CATCH STATIONS, AND LIFT STATIONS			
244-A	DCRT catch station	HAZOP: 222-S, 242-A, 242-S, 242-T, AW-102, C-106, S-102, SX-114, SY-102, B Plant, T Plant, U Plant, PFP, PUREX, Overground Transfers PHA: AZ-102/BX-109/SY-101	I-222S, I-242A, I-242S, I-242T, 102AW, 106C, 102S, 114SX, W058, XS, I-BPLANT, I-UPLANT, I-TPLANT, I-PFP, I-PUREX, OGT, CVR
244-BX	DCRT catch station	HAZOP: AW-102, C-106, S-102, SX-114, SY-102 PHA: AZ-102/BX-109/SY-101 WHAT IF: CCF, EE	102AW, 106C, 102S, 114SX, XS, BND, CRN, ITK, RAD, VEH, EE, CCF
244-CR	DCRT catch station	HAZOP: AW-102, C-106, S-102, SX-114, SY-102 PHA: AZ-102/BX-109/SY-101 WHAT IF: CCF, EE	102AW, 106C, 102S, 114SX, XS, BND, CRN, ITK, RAD, VEH, EE, CCF
244-S	DCRT catch station	HAZOP: AW-102, C-106, S-102, SX-114, SY-102 PHA: AZ-102/BX-109/SY-101 WHAT IF: CCF, EE	102AW, 106C, 102S, 114SX, XS, BND, CRN, ITK, RAD, VEH, EE, CCF
244-TX	DCRT catch station	HAZOP: AW-102, C-106, S-102, SX-114, SY-102 PHA: AZ-102/BX-109/SY-101 WHAT IF: CCF, EE	102AW, 106C, 102S, 114SX, XS, BND, CRN, ITK, RAD, VEH, EE, CCF
244-U	DCRT catch station	HAZOP: AW-102, C-106, S-102, SX-114, SY-102 PHA: AZ-102/BX-109/SY-101 WHAT IF: CCF, EE	102AW, 106C, 102S, 114SX, XS, BND, CRN, ITK, RAD, VEH, EE, CCF
MISCELLANEOUS DIVERSION BOXES, CAISSONS, VENT STATIONS			
241-AR-151	Diversion box	HAZOP: 222-S, 242-A, 242-S, 242-T, AW-102, C-106, S-102, SX-114, SY-102, B Plant, T Plant, U Plant, PFP, PUREX, Overground Transfers PHA: AZ-102/BX-109/SY-101	I-222S, I-242A, I-242S, I-242T, 102AW, 106C, 102S, 114SX, W058, XS, I-BPLANT, I-UPLANT, I-TPLANT, I-PFP, I-PUREX, OGT, CVR

Table 5.2-3. Applicable Hazard Evaluations for Tank Waste Remediation System Facilities. (30 sheets)

241-CR-151	Diversion box	HAZOP: 222-S, 242-A, 242-S, 242-T, AW-102, C-106, S-102, SX-114, SY-102, B Plant, T Plant, U Plant, PFP, PUREX, Overground Transfers PHA: AZ-102/BX-109/SY-101	I-222S, I-242A, I-242S, I-242T, 102AW, 106C, 102S, 114SX, W058, XS, I-BPLANT, I-UPLANT, I-TPLANT, I-PFP, I-PUREX, OGT, CVR
241-CR-152	Diversion box	HAZOP: 222-S, 242-A, 242-S, 242-T, AW-102, C-106, S-102, SX-114, SY-102, B Plant, T Plant, U Plant, PFP, PUREX, Overground Transfers PHA: AZ-102/BX-109/SY-101	I-222S, I-242A, I-242S, I-242T, 102AW, 106C, 102S, 114SX, W058, XS, I-BPLANT, I-UPLANT, I-TPLANT, I-PFP, I-PUREX, OGT, CVR
241-CR-153	Diversion box	HAZOP: 222-S, 242-A, 242-S, 242-T, AW-102, C-106, S-102, SX-114, SY-102, B Plant, T Plant, U Plant, PFP, PUREX, Overground Transfers PHA: AZ-102/BX-109/SY-101	I-222S, I-242A, I-242S, I-242T, 102AW, 106C, 102S, 114SX, W058, XS, I-BPLANT, I-UPLANT, I-TPLANT, I-PFP, I-PUREX, OGT, CVR
241-ER-151	Diversion box	HAZOP: 222-S, 242-A, 242-S, 242-T, AW-102, C-106, S-102, SX-114, SY-102, B Plant, T Plant, U Plant, PFP, PUREX, Overground Transfers PHA: AZ-102/BX-109/SY-101	I-222S, I-242A, I-242S, I-242T, 102AW, 106C, 102S, 114SX, W058, XS, I-BPLANT, I-UPLANT, I-TPLANT, I-PFP, I-PUREX, OGT, CVR
241-ER-152	Diversion box	HAZOP: 222-S, 242-A, 242-S, 242-T, AW-102, C-106, S-102, SX-114, SY-102, B Plant, T Plant, U Plant, PFP, PUREX, Overground Transfers PHA: AZ-102/BX-109/SY-101	I-222S, I-242A, I-242S, I-242T, 102AW, 106C, 102S, 114SX, W058, XS, I-BPLANT, I-UPLANT, I-TPLANT, I-PFP, I-PUREX, OGT, CVR
241-ER-153	Diversion box	HAZOP: 222-S, 242-A, 242-S, 242-T, AW-102, C-106, S-102, SX-114, SY-102, B Plant, T Plant, U Plant, PFP, PUREX, Overground Transfers PHA: AZ-102/BX-109/SY-101	I-222S, I-242A, I-242S, I-242T, 102AW, 106C, 102S, 114SX, W058, XS, I-BPLANT, I-UPLANT, I-TPLANT, I-PFP, I-PUREX, OGT, CVR
241-ER-311	Catch tank	HAZOP: AW-102, C-106, S-102, SX-114, SY-102 PHA: AZ-102/BX-109/SY-101 WHAT IF: CCF, EE	102AW, 106C, 102S, 114SX, XS, BND, CRN, ITK, RAD, VEH, EE, CCF
241-EW-151	Vent station	HAZOP: XS	XS
241-F-505	Diverter caisson	HAZOP: 222-S, 242-A, 242-S, 242-T, AW-102, C-106, S-102, SX-114, SY-102, B Plant, T Plant, U Plant, PFP, PUREX, Overground Transfers PHA: AZ-102/BX-109/SY-101	I-222S, I-242A, I-242S, I-242T, 102AW, 106C, 102S, 114SX, W058, XS, I-BPLANT, I-UPLANT, I-TPLANT, I-PFP, I-PUREX, OGT, CVR
241-F-562	Valve pit	HAZOP: 222-S, 242-A, 242-S, 242-T, AW-102, C-106, S-102, SX-114, SY-102, B Plant, T Plant, U Plant, PFP, PUREX, Overground Transfers PHA: AZ-102/BX-109/SY-101	I-222S, I-242A, I-242S, I-242T, 102AW, 106C, 102S, 114SX, W058, XS, I-BPLANT, I-UPLANT, I-TPLANT, I-PFP, I-PUREX, OGT, CVR
		MISCELLANEOUS FACILITIES	
Located in each tank farm	Caisson	HAZOP: AW-102, SY-102	102AW, XS
Located in each tank farm	Catch tank pit	HAZOP: AW-102, SY-102	102AW, XS
Located in each tank farm	Cleanout box	PHA: COB	COB

Table 5.2-3. Applicable Hazard Evaluations for Tank Waste Remediation System Facilities. (30 sheets)

Located in each tank farm	Diversion box	HAZOP: 222-S, 242-A, 242-S, 242-T, AW-102, C-106, S-102, SX-114, SY-102, B Plant, T Plant, U Plant, PFP, PUREX, Overground Transfers PHA: AZ-102/BX-109/SY-101	I-222S, I-242A, I-242S, I-242T, 102AW, 106C, 102S, 114SX, W058, XS, I-BPLANT, I-UPLANT, I-TPLANT, I-PFP, I-PUREX, OGT, CVR
Located in each tank farm	Diverter station	HAZOP: 222-S, 242-A, 242-S, 242-T, AW-102, C-106, S-102, SX-114, SY-102, B Plant, T Plant, U Plant, PFP, PUREX, Overground Transfers PHA: AZ-102/BX-109/SY-101	I-222S, I-242A, I-242S, I-242T, 102AW, 106C, 102S, 114SX, W058, XS, I-BPLANT, I-UPLANT, I-TPLANT, I-PFP, I-PUREX, OGT, CVR
Located in each tank farm	Flush pit	HAZOP: AW-102, SY-102	102AW, XS
Located in each tank farm	Leak detection pit	HAZOP: AW-102, SY-102	102AW, XS
Located in each tank farm	Pump pit	HAZOP: 222-S, 242-A, 242-S, 242-T, AW-102, C-106, S-102, SX-114, SY-102, B Plant, T Plant, U Plant, PFP, PUREX, Overground Transfers PHA: AZ-102/BX-109/SY-101	I-222S, I-242A, I-242S, I-242T, 102AW, 106C, 102S, 114SX, W058, XS, I-BPLANT, I-UPLANT, I-TPLANT, I-PFP, I-PUREX, OGT, CVR
Located in each tank farm	Service pit	HAZOP: AW-102, SY-102	102AW, XS
Located in each tank farm	Sluice transfer box	PHA: COB	COB
Located in each tank farm	Valve pit	HAZOP: 222-S, 242-A, 242-S, 242-T, AW-102, C-106, S-102, SX-114, SY-102, B Plant, T Plant, U Plant, PFP, PUREX, Overground Transfers PHA: AZ-102/BX-109/SY-101	I-222S, I-242A, I-242S, I-242T, 102AW, 106C, 102S, 114SX, W058, XS, I-BPLANT, I-UPLANT, I-TPLANT, I-PFP, I-PUREX, OGT, CVR
Located in various tank farms	Vertical Storage units	PHA: VSU	VSU
Located in various tank farms	MISF - Miscellaneous inactive storage facilities (includes inactive underground storage facilities and other inactive facilities)	PHA: MISF	-I (Identifier ends in -I, e.g., CRN-05-I)
Overground Transfer Line	Portable Overground Transfer Line	HAZOP: Overground Transfers	OGT
PFP Pond	Pond	PHA: CDP	CDP
Vertical Storage Units	12" - 20' in depth	PHA: VSU	VSU
209-E	less than 90-day storage pad	PHA: 209E	90D
216-Z-20	Crib	PHA: CDP	CDP
216-Z-21	Pond	PHA: CDP	CDP
241-AR-204	Railcar/truck receiving facility	HAZOP: 204AR	204AR
241-AR-244	Vault	HAZOP: 244AR PHA: 244AR	244AR, 244AR-PH
2727-W	Sodium storage bldg	PHA: 2727W	2727W

Table 5.2-3. Applicable Hazard Evaluations for Tank Waste Remediation System Facilities. (30 sheets)

PIPING			
Double Encased Piping	Transfer Line Piping	HAZOP: 242-A, 242-S, AW-102, PFP, SY-102 WHAT IF: EE	I-242A, I-242S, 102AW, I-PFP, W058, XS, EE
Secondary Containment Piping	Transfer Line Piping	HAZOP: 222-S, PUREX, SY-102/XS, B Plant, T Plant, U Plant	I-222S, I-PUREX, XS, I-BPLANT, I-TPLANT, I-UPLANT
Single Encased Piping	Transfer Line Piping	HAZOP: AW-107, S-102, SY-102	107AN, 102S, XS
SATELLITE ACCUMULATION AREAS			
A Satellite Accumulation Area	Satellite Accumulation Area	PHA: 209E	90D
AN Satellite Accumulation Area	Satellite Accumulation Area	PHA: 209E	90D
AP Satellite Accumulation Area	Satellite Accumulation Area	PHA: 209E	90D
AW Satellite Accumulation Area	Satellite Accumulation Area	PHA: 209E	90D
AX Satellite Accumulation Area	Satellite Accumulation Area	PHA: 209E	90D
AY Satellite Accumulation Area	Satellite Accumulation Area	PHA: 209E	90D
B Satellite Accumulation Area	Satellite Accumulation Area	PHA: 209E	90D
C Satellite Accumulation Area	Satellite Accumulation Area	PHA: 209E	90D
S Satellite Accumulation Area	Satellite Accumulation Area	PHA: 209E	90D
T Satellite Accumulation Area	Satellite Accumulation Area	PHA: 209E	90D
TX Satellite Accumulation Area	Satellite Accumulation Area	PHA: 209E	90D
U Satellite Accumulation Area	Satellite Accumulation Area	PHA: 209E	90D

[1]These devices are used on an as-needed basis throughout TWRS, therefore, the hazard analyses are applicable to the anticipated uses and not on a specific facility or tank.

Table 5.2-4. Natural Phenomena, External Events, and Common Cause Hazards for Tank Waste Remediation System Facilities.

Natural phenomena[a]	External events[b]	Common cause[b]
Lightning	Aircraft crashes	Loss of electrical power
Tornadoes	Range fires	Loss of water supply
High winds	Dam collapse	Loss of steam supply
Earthquakes	Onsite and offsite transportation accidents	Loss of fuel supply
Ashfall	Water/steam main breaks	Loss of air supply
Eruption of molten lava	Excavation	Disabled or unavailable staff
Severe dust storms or dust devils		Poor quality materials
Accumulation of heavy snow		Aging effects
Severe hail storms		Chemical phenomena

[a]Natural phenomena are also considered as potential common cause hazards.

[b]Human error is a contributor to many external and common cause events. Consideration of this contributor occurs as an integral part of the Preliminary Hazards Analysis (PHA) and What-if process.

Table 5.2-5. Representative Accidents Analyzed and Cross-Reference to Basis for Interim Operation Accident Analysis Sections.*

Analyzed Accidents	Section
Nuclear Criticality	5.3.2.1
In-Tank Fuel Fire/Deflagration	5.3.2.16
Mixing of Incompatible Material - Tank Pressurization	5.3.2.12
Flammable Gas Deflagrations	5.3.2.14
HEPA Filter Failure - Exposure to High Temperature or Pressure	5.3.2.2
Fire in Contaminated Area	5.3.2.3
Waste Transport Vehicle Accident	5.3.2.23
Organic Solvent Fire	5.3.2.15
Organic Salt-Nitrate Reaction	5.3.2.17
Natural Phenomena - High Wind	5.3.2.23
Natural Phenomena - Lightning	5.3.2.23
Tank Failure Due to Excessive Loads	5.3.2.13
Tank Failure Due to Vacuum or Degradation	5.3.2.13
Natural Phenomena - Seismic	5.3.2.23
Spray Leak in Structure or from Overground Waste Transfer Lines	5.3.2.20
Spray Leak from Underground Waste Transfer Lines	5.3.2.21
Caustic Spray Leak	5.3.2.9
Tank Bump	5.3.2.22
Unfiltered Release	5.3.2.2
Subsurface Leak Resulting in Pool	5.3.2.19
Evaporator Dump	5.3.2.4
Mixing of Incompatible Material - Toxic Vapor Generation	5.3.2.11
Leak from Railcar/Tank Trailer	5.3.2.6
Surface Leak Resulting in Pool	5.3.2.18
Unplanned Excavation/Drilling in Pond/Ditch/Crib	5.3.2.8
Subsurface Leak Remaining Subsurface	5.3.2.7
Sodium Fire	5.3.2.10
Aboveground Structure Failure	5.3.2.23
Steam Intrusion from Interfacing Systems	5.3.2.5

*The analyzed accidents and cross-references for WRSS are contained in Addendum 1. The analyzed accidents and cross-references for the replacement cross-site transfer system are contained in Addendum 2. The analyzed accidents and cross-references for the 702-AZ ventilation system are contained in Addendum 3. The analyzed accidents and cross-references for the 241-AZ-101 mixer pump test are contained in Addendum 4.

This page intentionally left blank.

5.3 ACCIDENT ANALYSIS

This section describes the accident analysis methodology (Section 5.3.1, "Methodology") and summarizes the accident analysis results (Section 5.3.2, "Accident Analysis Scenarios"). Table 5.3-1 is a list of the representative accidents selected for further quantitative analysis and the sections where the corresponding accident results are summarized.

5.3.1 Methodology

This section summarizes the general calculation methods for quantifying the radiological and toxicological consequences of postulated accidents (Section 5.3.1.1, "Radiological Consequence Calculation Methodology" and 5.3.1.2, "Toxicological Consequence Calculation Methodology," respectively). Consequence calculation methods specific to individual accidents are described in the calculation note(s) for corresponding accidents. Section 5.3.1.3, "Basis for Estimating Accident Frequency," explains the basis used in estimating the frequency category for postulated accidents with and without controls.

Accident consequences are combined with the accident frequency and compared to the risk guidelines shown in Tables 5.3.1-2 and 5.3.1-3. For comparison with the risk guidelines, the radiological and toxicological consequences of accidents must be calculated at the location of the maximum onsite and the maximum offsite individual. The maximum onsite and offsite individuals are defined in WHC-CM-4-46[1], *Nonreactor Facility Safety Analysis Manual*, as follows.

- **Maximum Onsite Individual**—The hypothetical onsite receptor located at the distance (at least 100 m [330 ft] or at the facility boundary) and in the direction from the point of release at which the maximum dose occurs. This receptor represents the onsite worker for the purpose of reporting the consequences of postulated accidents.

- **Maximum Offsite Individual**—The hypothetical receptor located at or beyond the Hanford Site boundary location at the distance and in the direction from the point of release at which the maximum dose occurs. This receptor represents the public for the purpose of reporting the consequences of postulated accidents.

For Tank Waste Remediation System (TWRS) facility accidents, the maximum onsite individual is located at 100 m (330 ft) when radioactive or hazardous material is released at ground level. A ground-level release is assumed for all the TWRS facility accidents analyzed.

---

[1]Refer to Appendix F, "Sitewide Controlled Manual Cross-Reference Table," of the BIO for cross-walk between sitewide controlled manuals (e.g., WHC-CM-X-XX) superseded by Fluor Daniel Hanford, Inc., procedures (e.g., HNF-PRO-XX).

Based on Hanford Site meteorology, the maximum offsite individual for TWRS facility accidents is located on the Hanford Site boundary at 8,760 m (5.44 mi) to the north (near side of Columbia River).

5.3.1.1 Radiological Consequence Calculation Methodology. The ORIGEN2 computer program (ORNL-5621, *ORIGEN2-A - A Revised and Updated Version of the Oak Ridge Isotope Generation and Depletion Code*) was used to identify the presence of radionuclides in TWRS tank waste. Use of the program revealed the presence of more than 150 radionuclides. The following seven radionuclides contribute approximately 99% of the inhalation dose: ^{90}Sr, ^{90}Y, ^{137}Cs, ^{239}Pu, ^{238}Pu, ^{241}Pu, and ^{241}Am. Two additional radionuclides, ^{237}Np and ^{244}Cm, were added based on process knowledge; and two additional radionuclides, ^{60}Co and ^{154}Eu, were added to account for external exposure considerations.

The in-tank concentrations of the 11 radionuclides chosen for inclusion in accident analyses are given in Table 5.3.1-4. A detailed discussion of the development of the radionuclide inventory is presented in WHC-SD-WM-SARR-037, *Development of Radiological Concentrations and Unit Liter Doses for Tank Waste Remediation System Final Safety Analysis Report Radiological Consequence Calculations.*

Two potential radiological exposure pathways, internal (committed effective dose equivalent) and external (effective dose equivalent), are associated with releases of radioactive materials. The total effective dose equivalent calculated for an individual is equal to the sum of the dose contributions from the two exposure pathways.

- **Internal Exposure Pathway**—Internal exposure pathways include inhalation and ingestion. The inhalation pathway is the major internal exposure pathway for TWRS facility accidents. Exposure by means of the inhalation pathway occurs (1) when an accident results in a release of airborne radioactive material transported by wind and inhaled by the maximum onsite and offsite individuals, or (2) when radioactive materials that have been deposited on the ground become suspended and are subsequently inhaled. The dose contribution from inhalation of resuspended materials is orders of magnitude less than that from inhalation of airborne radioactive materials during plume passage. Because the dose contribution of inhalation of resuspended materials is minor, the resuspension dose is not included in consequence calculations for the maximum onsite individual. However, the resuspension dose is included in consequence calculations for the maximum offsite individual as an inherent part of the ingestion dose calculations.

  Exposure by means of the ingestion pathway can occur when radioactive material that has been deposited offsite is ingested by any of the following methods:

  - Eating crops on which radioactive materials have deposited
  - Eating crops grown in, or animals raised on, contaminated soil
  - Drinking contaminated water.

  Depending on the type of tank waste involved, the dose contribution from the ingestion of contaminated food during a 24-hour period can

account for up to 20% of the total effective dose equivalent. Therefore, the dose contribution from the ingestion of contaminated foods for 24 hours has been included in offsite consequence calculations. The 24-hour exposure duration is based on the premise that the maximum offsite individual can be notified and appropriate corrective action can be taken within 24 hours of the start of the accident (DOE/RL-94-02, *Hanford Emergency Response Plan*).

- **External Exposure Pathway**—External exposure pathways include submersion, ground shine, and direct exposure from a concentrated radioactive source, such as a pool formed from a spill of liquid radioactive material.

  Submersion refers to the external dose received by a person located in the plume of airborne radioactive material during plume passage. For the radionuclides present in tank waste, the submersion dose is orders of magnitude less than the inhalation dose. Because the contribution of submersion dose is minor, the submersion dose is not included in consequence calculations.

  Ground shine refers to the external dose received by a person standing on ground contaminated by radioactive materials deposited during plume passage. The ground shine dose is orders of magnitude less than the inhalation dose; and, therefore, it is not included in consequence calculations for the maximum onsite individual. The ground shine dose is included in consequence calculations for the maximum offsite individual as an inherent part of the ingestion dose calculation.

  The dose contribution to the maximum onsite individual from the direct exposure pathway can be significant for accident scenarios that result in surface pools of radioactive waste. For these accidents, the direct exposure dose to the maximum onsite individual is calculated and included in the consequence calculations.

Because the risk guidelines in Tables 5.3.1-2 and 5.3.1-3 apply to only doses resulting from direct exposure to the passing plume (i.e., inhalation and submersion), the comparison with doses from a postulated accident that include the dose from the above internal and external exposure pathways is conservative.

5.3.1.1.1 Dose Calculation Methods. For unmitigated accident analyses, dose calculations for the maximum onsite individual conservatively assume that the individual remains at a distance of 100 m (330 ft) for 12 hours. The 12-hour duration is chosen as it is the normal work shift in terms of hours worked for tank farm operating personnel. Dose calculations for the maximum offsite individual assume that the individual remains at the worst-case distance and direction for 24 hours. The 24-hour duration is based on the premise that the maximum offsite individual can be notified and appropriate corrective action (e.g., sheltering, evacuation) can be taken within 24 hours of the start of the accident. Mitigated accident analyses may use a different exposure time based on a demonstrated ability to detect the accident and protect the receptor (emergency response).

The airborne source term is the amount of airborne radioactive material generated by the accident that is available for transport to the maximum onsite and offsite individuals. The airborne source term was calculated by multiplying conservatively estimated material at risk by factors affecting the release (e.g., damage ratio, airborne release fraction, respirable fraction, leak path factor). Conservative values of release factors specific to the accident scenario are selected from tank farm data or sources such as DOE-HDBK-3010-94, *Airborne Release Fractions/Rates and Respirable Fractions for Nonreactor Nuclear Facilities*. Given the airborne source term, the doses are calculated according to the methodology in WHC-SD-WM-SARR-016, *Tank Waste Compositions and Atmospheric Dispersion Coefficients*, and WHC-SD-WM-SARR-037. In this methodology, doses are calculated using unit liter doses. The unit liter dose is the dose from inhalation or ingestion of one liter of tank material. Unit liter doses are calculated for single-shell tank solids and liquids, double-shell tank solids and liquids (including Aging Waste Facility solids and liquids), and an all-liquids and all-solids composite. The unit liter doses are based on the maximum sample data for each isotope in each composite. The unit liter doses are given in Table 5.3.1-5, and the details of the dose derivation are given in WHC-SD-WM-SARR-016.

5.3.1.2 Toxicological Consequence Calculation Methodology. The chemical composition of tank farm wastes has been determined based on an evaluation of available tank waste characterization data. The composite concentrations for the 24 analytes of concern are presented in Table 5.3.1-6. A detailed discussion of the development of the chemical inventory is presented in WHC-SD-WM-SARR-011, *Toxic Chemical Considerations for Tank Farm Releases*.

Tank headspace contains gases released from the waste caused by continuing chemical reactions and vapor pressure changes. Worst-case and maximum steady-state headspace gas composite concentrations are presented in Table 5.3.1-7. The organic concentrations are identical for the two composites and are based on Tank 241-C-103 data. For the worst-case composite, the ammonia and nitrous oxide concentrations are based on Tank 241-SY-101 slurry release data. For the maximum steady-state composite, the ammonia and nitrous oxide concentrations were conservatively selected based on headspace sample data. The sample data indicates a peak steady-state ammonia concentration of 1,140 ppm and nitrous oxide concentration of 701 ppm. A concentration of 2,000 ppm for ammonia and 1,400 ppm for nitrous oxide is assumed for this analysis.

The toxicological source terms resulting from tank farm accidents comprise liquid and solid particulates and gases. Evaluation of the effects of chemical exposure is based on the airborne pathway only, because the toxicological risk guidelines are based on the chemical concentration at the location of the maximum onsite and offsite individuals. External exposure to the skin and eyes was considered in the development of the risk guidelines for corrosives and irritants.

5.3.1.2.1 Exposure Calculation Methods. Toxicological consequence calculations are performed to determine the peak 15-min average

concentration[2] for the maximum onsite and offsite individual over the duration of the release for all chemicals where the toxic effect is immediate (i.e., concentration-dependent). If it is known that the toxic effects of a chemical are not concentration-dependent, but depend on the total quantity of chemical taken up by the body (i.e., dose-dependent), then the peak 1-h concentration may be used. The calculated toxic chemical concentration is compared with *Emergency Response Planning Guidelines* (AIHA 1988) or alternative equivalent guidelines (Table 5.3.1-3). The Emergency Response Planning Guidelines are based on exposures of up to 1 h and are the best existing values for evaluation of acute exposure to toxic chemicals.

Equations used to calculate peak concentrations of individual chemicals are presented in WHC-SD-WM-SARR-011. The peak concentrations were used to calculate sum-of-fraction values. Table 5.3.1-8 contains the sum-of-fractions of risk guidelines for a unit release of chemicals and gases. A detailed discussion of the derivation of sum-of-fractions values is presented in WHC-SD-WM-SARR-011.

5.3.1.3 Basis for Estimating Accident Frequency. The original frequency category (Table 5.2-1) for the representative accident without controls is qualitatively estimated during the hazard evaluation. The accident frequency category without controls is reconfirmed based on review of the postulated accident scenario. The frequency of the accident scenario with selected controls is determined assuming that the safety structures, systems, and components perform their safety function and that the Technical Safety Requirements (HNF-SD-WM-TSR-006, *Tank Waste Remediation System Technical Safety Requirements*) are followed. For preventive controls, the postulated accident may be prevented or the frequency of the accident reduced with the same consequences. For mitigative controls, the accident frequency remains unchanged, but the accident consequences are reduced. Estimated frequencies are the annual frequency of the representative accident at TWRS facilities (i.e., all tank farms).

The assumption that safety structures, systems, and components perform their safety function is reasonable because the reliability of structures, systems, and components was an important control decision criteria. Additionally, several controls are typically selected to reduce the risk of the postulated accident. The failure of structures, systems, and components and Technical Safety Requirement controls will be considered in the TWRS Final Safety Analysis Report in the assessment of beyond design basis accidents.

5.3.1.4 References.

AIHA, 1988, *Emergency Response Planning Guidelines*, American Industrial Hygienist Association, Akron, Ohio.

Bacon, R. F., 1996, *Tank Waste Remediation System Accident Analysis Risk Evaluation Guidelines* (letter 9651709 to J. E. Kinzer, U.S. Department of Energy, Richland Operations Office, April 22), Westinghouse Hanford Company, Richland, Washington.

---

[2]The accident duration is used for exposures of less than 15 min with a minimum of 1 min.

DOE-HDBK-3010-94, 1994, *Airborne Release Fractions/Rates and Respirable Fractions for Nonreactor Nuclear Facilities*, U.S. Department of Energy, Washington, D.C.

DOE/RL-94-02, 1995, *Hanford Emergency Response Plan*, U.S. Department of Energy, Richland Operations Office, Richland, Washington.

HNF-SD-WM-TSR-006, 1998, *Tank Waste Remediation System Technical Safety Requirements*, Rev. 0-P, Fluor Daniel Hanford, Inc., Richland, Washington.

ORNL-5621, 1980, *ORIGEN2-A, A Revised and Updated Version of the Oak Ridge Isotope Generation and Depletion Code*, Oak Ridge National Laboratory, Oak Ridge, Tennessee.

WHC-CM-4-46, 1989, *Nonreactor Facility Safety Analysis Manual*, Change 1, Westinghouse Hanford Company, Richland, Washington.

WHC-SD-WM-SARR-011, 1996, *Toxic Chemical Considerations for Tank Farm Releases*, Rev. 2, Westinghouse Hanford Company, Richland, Washington.

WHC-SD-WM-SARR-016, 1996, *Tank Waste Compositions and Atmospheric Dispersion Coefficients*, Rev. 2, Westinghouse Hanford Company, Richland, Washington.

WHC-SD-WM-SARR-037, 1996, *Development of Radiological Concentrations and Unit Liter Doses for TWRS FSAR Radiological Consequence Calculations*, Rev. 0, Westinghouse Hanford Company, Richland, Washington.

Table 5.3.1-1. Representative Accidents Analyzed and Cross-Reference to Basis for Interim Operation Accident Analysis Sections.*

Analyzed Accidents	Section
Nuclear Criticality	5.3.2.1
In-Tank Fuel Fire/Deflagration	5.3.2.16
Mixing of Incompatible Material - Tank Pressurization	5.3.2.12
Flammable Gas Deflagrations	5.3.2.14
HEPA Filter Failure - Exposure to High Temperature or Pressure	5.3.2.2
Fire in Contaminated Area	5.3.2.3
Waste Transport Vehicle Accident	5.3.2.23
Organic Solvent Fire	5.3.2.15
Organic Salt-Nitrate Reaction	5.3.2.17
Natural Phenomena - High Wind	5.3.2.23
Natural Phenomena - Lightning	5.3.2.23
Tank Failure Due to Excessive Loads	5.3.2.13
Tank Failures Due to Vacuum or Degradation	5.3.2.13
Natural Phenomena - Seismic	5.3.2.23
Spray Leak in Structure or from Overground Waste Transfer Lines	5.3.2.20
Spray Leak from Underground Waste Transfer Lines	5.3.2.21
Caustic Spray Leak	5.3.2.9
Tank Bump	5.3.2.22
Unfiltered Release	5.3.2.2
Subsurface Leak Resulting in Pool	5.3.2.19
Evaporator Dump	5.3.2.4
Mixing of Incompatible Material - Toxic Vapor Generation	5.3.2.11
Leak from Railcar/Tank Trailer	5.3.2.6
Surface Leak Resulting in Pool	5.3.2.18
Unplanned Excavation/Drilling in Pond/Ditch/Crib	5.3.2.8
Subsurface Leak Remaining Subsurface	5.3.2.7
Sodium Fire	5.3.2.10
Aboveground Structure Failure	5.3.2.23
Steam Intrusion from Interfacing Systems	5.3.2.5

*The analyzed accidents and cross-references for WRSS are contained in Addendum 1. The analyzed accidents and cross-references for the replacement cross-site transfer system are contained in Addendum 2. The analyzed accidents and cross-references for the 702-AZ ventilation system are contained in Addendum 3.

Table 5.3.1-2. Radiological Risk Guidelines.

Frequency category	Frequency range (yr^{-1})	Effective dose equivalent (mSv)	
		Onsite	Offsite
Anticipated	$>10^{-2}$ to $\leq 10^{0}$	5	1
Unlikely	$>10^{-4}$ to $\leq 10^{-2}$	50	5
Extremely unlikely	$>10^{-6}$ to $\leq 10^{-4}$	100	40

Source: Bacon, R. F., 1996, Tank Waste Remediation System Accident Analysis Risk Evaluation Guidelines (letter 9651709 to J. E. Kinzer, U.S. Department of Energy, Richland Operations Office, April 22), Westinghouse Hanford Company, Richland, Washington.

Table 5.3.1-3. Toxicological Risk Guidelines.

Frequency category	Frequency range (yr^{-1})	Primary concentration guidelines	
		Onsite	Offsite
Anticipated	$>10^{-2}$ to $\leq 10^{0}$	≤ERPG-1	≤PEL-TWA
Unlikely	$>10^{-4}$ to $\leq 10^{-2}$	≤ERPG-2	≤ERPG-1
Extremely unlikely	$>10^{-6}$ to $\leq 10^{-4}$	≤ERPG-3	≤ERPG-2

Source: Bacon, R. F., 1996, Tank Waste Remediation System Accident Analysis Risk Evaluation Guidelines (letter 9651709 to J. E. Kinzer, U.S. Department of Energy, Richland Operations Office, April 22), Westinghouse Hanford Company, Richland, Washington.

ERPG = Emergency Response Planning Guideline
PEL = permissible exposure limit
TWA = time-weighted average

Table 5.3.1-4. In-Tank Concentrations of the 11 Radionuclides Chosen for Inclusion in Accident Analysis.

Isotope	Concentration (Bq/L)					
	SST liquids	SST solids	DST liquids	DST solids	Aging waste liquids	Aging waste solids
^{60}Co	9.53 E+06	4.2 E+08	6.97 E+06	1.5 E+07	7.71 E+05	4.9 E+08
^{90}Sr	1.05 E+10	1.6 E+12	4.59 E+09	5.2 E+10	5.60 E+09	2.9 E+12
^{90}Y	1.05 E+10	1.6 E+12	4.59 E+09	5.2 E+10	5.60 E+09	2.9 E+12
^{137}Cs	2.21 E+10	1.0 E+11	5.86 E+10	5.9 E+10	8.84 E+10	9.8 E+10
^{154}Eu	2.35 E+09	5.8 E+09	4.18 E+07	3.0 E+08	0.00*	1.1 E+10
^{237}Np	0.00*	3.0 E+07	2.3 E+05	8.1 E+05	9.20 E+04	9.9 E+08
^{238}Pu	9.21 E+04	1.9 E+08	1.78 E+06	7.2 E+07	2.75 E+03	6.7 E+07
^{239}Pu	3.62 E+07	4.4 E+08	7.65 E+06	1.6 E+09	1.20 E+06	4.4 E+08
^{241}Pu	2.57 E+08	3.2 E+09	1.84 E+07	3.8 E+09	3.39 E+05	1.7 E+09
^{241}Am	4.23 E+07	2.3 E+08	3.40 E+07	2.7 E+09	1.10 E+06	1.1 E+10
^{244}Cm	4.23 E+05	2.3 E+06	1.22 E+05	1.6 E+07	1.10 E+04	6.1 E+07

Source: WHC-SD-WM-SARR-037, 1996, Development of Radiological Concentrations and Unit Liter Doses for TWRS FSAR Radiological Consequence Calculations, Rev. 0, Westinghouse Hanford Company, Richland, Washington.

*No valid sample result exists for these isotopes. Analysis indicates these isotopes, in the liquids, are negligible contributors to dose.

DST = double-shell tank

SST = single-shell tank

Table 5.3.1-5. Unit Liter Doses for Tank Farm Composites.

Composite	Inhalation ULD (Sv/L)	Ingestion ULD* ($Sv-m^3/s-L$)
All liquids	1.2 E+04	0.11
All solids	1.9 E+06	8.2
Single-shell tank liquids	1.1 E+04	0.052
Single-shell tank solids	2.2 E+05	4.1
Double-shell tank liquids	6.1 E+03	0.068
Double-shell tank solids	5.3 E+05	0.48
Aging waste facility liquids	1.4 E+03	0.092
Aging waste facility solids	1.7 E+06	8.1

*Includes 24 hours ingestion of fruits and vegetables, ground shine, inadvertent soil ingestion, and inhalation of material resuspended from the ground.

ULD = unit liter doses

Table 5.3.1-6. Composite Concentrations for the 24 Analytes at the Tank Waste Remediation System Tank Farms.

Analyte	Composite concentrations (g/L)			
	SST solids	SST liquids	DST solids	DST liquids
Ammonia (NH_3)	3.3 E-01	5.1 E-01	6.6 E+00	7.1 E+00
Antimony (Sb)	1.5 E+00	3.6 E-03	9.2 E-01	6.4 E-03
Arsenic (As)	1.2 E+00	3.0 E-03	5.7 E+00	1.1 E-02
Barium (Ba)	4.0 E+01	5.3 E-02	5.9 E+00	3.3 E-02
Beryllium (Be)	2.6 E-02	3.0 E-04	2.4 E-01	3.8 E-03
Cadmium (Cd)	1.7 E+00	5.0 E-02	2.6 E+01	7.0 E-02
Calcium (Ca)	5.1 E+01	1.1 E+00	2.6 E+01	1.3 E+00
Cerium (Ce)	9.0 E-01	1.8 E+00	2.6 E+00	5.8 E-02
Chromium (Cr^{+3})	6.9 E+01	[a]	1.5 E+02	[a]
Cobalt (Co)	5.4 E-01	1.3 E-03	4.4 E+00	8.8 E-03
Cyanide (Cn)	8.2 E+00	5.3 E+00	4.7 E-01	9.1 E-02
Dysprosium (Dy)	[a]	[a]	[a]	[a]
Lanthanum (La)	5.0 E+01	1.9 E-01	3.0 E+01	1.0 E+00
Mercury (Hg)	5.4 E+01	3.1 E-01	1.2 E-01	2.4 E-04
Neodymium (Nd)	2.4 E-01	1.4 E-01	7.0 E+00	5.6 E-03
Oxalate (C_2O_4)	2.8 E+02	3.7 E+00	2.8 E+02	[a]
Selenium (Se)	3.5 E+00	8.2 E-02	1.9 E+00	2.8 E-01
Sodium hydroxide (NaOH)	2.1 E+02	2.1 E+02	2.3 E+02	2.1 E+02
Sodium (Na)[b]	4.8 E+02	2.1 E+02	3.5 E+02	2.1 E+02
Tellurium (Te)	2.0 E-01	[a]	9.3 E-01	2.7 E-03
Thallium (Tl)	1.2 E+00	3.2 E-03	1.5 E+01	3.7 E-02
Total organic carbon (TOC)-oxalate[b]	1.0 E+02	4.0 E+01	7.5 E+01	4.0 E+01
Uranium (U)	2.8 E+02	1.8 E+00	4.4 E+01	1.1 E+01
Vanadium (V)	3.3 E-02	4.1 E-03	1.2 E-01	2.1 E-03

Source: WHC-SD-WM-SARR-011, 1996, Toxic Chemical Considerations for Tank Farm Releases, Rev. 2, Westinghouse Hanford Company, Richland, Washington.

Note: The Aging Waste Facility tanks are grouped with the other double-shell tanks for toxicological analysis.

[a]The best available data indicates that there is not a significant concentration of this analyte in this composite.

[b]To avoid counting the same analyte twice, the oxalate concentration was subtracted from the total organic carbon concentration and NaOH was subtracted from the Na concentration.

DST = double-shell tank

SST = single-shell tank

Table 5.3.1-7. Worst-Case and Maximum Steady-State Headspace Gas Composite Concentrations in the Tank Waste Remediation System.

Gas	Worst-case composite[a] concentration		Maximum steady- state concentration[b]	
	ppmv	mg/m^{3c}	ppmv	mg/m^{3c}
Acetonitrile	13	21.8	13	21.8
Ammonia	61,300	40,000	2,000	1,300
Benzene	0.4	1.3	0.4	1.3
1,3 Butadiene	0.1	0.19	0.1	0.19
Butanol	58	164	58	164
Dodecane	45	296	45	296
2-Hexanone	0.8	2.7	0.8	2.7
Methylene chloride	2	22	2	22
Nitrous oxide	67,000	110,000	1,400	2,340
Propanenitrile	5	11	5	11
Tributyl phosphate	1	12	1	12
Tridecane	50	390	50	390

[a]Based on worst-case composites including slurry gas released.
[b]Based on worst-case steady-state samples, which does not include slurry gas releases.
[c]The conversion from ppmv to mg/m^3 assumes a temperature of 38 °C (100 °F) and a pressure of 740 torr (0.1 MPA).

Table 5.3.1-8. Sum-of-Fraction of Risk Guidelines for a Unit Release of Chemicals and Gases. (2 sheets)

Tank waste type (units of sum-of-fractions follow tank waste type)	Maximum individual	Accident frequency, 1/yr		
		10^{-2} - 1	10^{-4} - 10^{-2}	10^{-6} - 10^{-4}
DST or SST solid or liquid continuous release				
Single-shell liquids (s/L)	Onsite	9.6 E+03	7.5 E+02	2.0 E+02
Single-shell liquids (s/L)	Offsite	8.0 E+00	8.0 E+00	6.2 E-01
Single-shell solids (s/L)	Onsite	4.0 E+04	2.1 E+04	1.0 E+03
Single-shell solids (s/L)	Offsite	9.4 E+01	3.3 E+01	1.7 E+01
Double-shell liquids (s/L)	Onsite	1.0 E+04	7.5 E+02	2.1 E+02
Double-shell liquids (s/L)	Offsite	8.4 E+00	8.4 E+00	6.2 E-01
Double-shell solids (s/L)	Onsite	1.8 E+04	3.3 E+03	6.3 E+02
Double-shell solids (s/L)	Offsite	1.9 E+02	1.5 E+01	2.8 E+00
DST or SST liquid or solid puff release				
Single-shell liquids (L^{-1})	Onsite	2.8 E+03	2.2 E+02	5.7 E+01
Single-shell liquids (L^{-1})	Offsite	3.2 E-02	3.2 E-02	2.5 E-03
Single-shell solids (L^{-1})	Onsite	1.2 E+04	6.0 E+03	2.9 E+02
Single-shell solids (L^{-1})	Offsite	3.8 E-01	1.3 E-01	6.9 E-02
Double-shell liquids (L^{-1})	Onsite	2.9 E+03	2.2 E+02	6.0 E+01
Double-shell liquids (L^{-1})	Offsite	3.4 E-02	3.4 E-02	2.5 E-03
Double-shell solids (L^{-1})	Onsite	5.2 E+03	9.7 E+02	1.8 E+02
Double-shell solids (L^{-1})	Offsite	7.7 E-01	5.9 E-02	1.1 E-02
Gas Release - Worst Case Composite				
Continuous (s/m^3)	Onsite	7.7 E+01	9.4 E+00	1.9 E+00
Continuous (s/m^3)	Offsite	6.6 E-02	6.6 E-02	8.1 E-03
Puff (m^{-3})	Onsite	2.3 E+01	2.8 E+00	5.8 E-01
Puff (m^{-3})	Offsite	2.7 E-04	2.7 E-04	3.2 E-05

Table 5.3.1-8. Sum-of-Fraction of Risk Guidelines for a Unit Release of Chemicals and Gases. (2 sheets)

Tank waste type (units of sum-of-fractions follow tank waste type)	Maximum individual	Accident frequency, 1/yr		
		10^{-2} - 1	10^{-4} - 10^{-2}	10^{-6} - 10^{-4}
Gas Release - Maximum Sample Composite Note this data should be used only when the accident scenario does not involve a slurry gas release. Otherwise use the above sum-of-fractions.				
Continuous (s/m^3)	Onsite	2.6 E+00	3.3 E-01	7.1 E-02
Continuous (s/m^3)	Offsite	2.3 E-03	2.3 E-03	2.8 E-04
Puff (m^{-3})	Onsite	7.9 E-01	9.9 E-02	2.1 E-02
Puff (m^{-3})	Offsite	9.3 E-06	9.2 E-06	1.1 E-06
50% NaOH releases				
Continuous (s/L)	Onsite	1.3 E+04	1.0 E+03	2.6 E+02
Continuous (s/L)	Offsite	1.1 E+01	1.1 E+01	8.6 E-01
Puff (L^{-1})	Onsite	3.8 E+03	3.0 E+02	7.5 E+01
Puff (L^{-1})	Offsite	4.3 E-02	4.3 E-02	3.5 E-03
All-liquids and all-solids continuous release				
All liquids (s/L)	Onsite	1.0 E+04	7.5 E+02	2.1 E+02
All Liquids (s/L)	Offsite	8.4 E+00	8.4 E+00	6.2 E-01
All solids (s/L)	Onsite	5.1 E+04	2.3 E+04	1.2 E+03
All solids (s/L)	Offsite	2.5 E+02	4.2 E+01	1.9 E+01
All-liquids or all-solids puff release				
All liquids (L^{-1})	Onsite	2.9 E+03	2.2 E+02	6.0 E+01
All liquids (L^{-1})	Offsite	3.4 E-02	3.4 E-02	2.5 E-03
All solids (L^{-1})	Onsite	1.5 E+04	6.6 E+03	3.6 E+02
All solids (L^{-1})	Offsite	1.0 E+00	1.7 E-01	7.6 E-02

Note (1): The Aging Waste Facility tanks are grouped with the other double-shell tanks for the toxicological analysis.
DST = double-shell tank
SST = single-shell tank

Note (2): Use of the information in this table relative to WRSS is presented in Addendum 1.

*The sum-of-fractions is multiplied by the release rate for continuous release and release amount for a puff releases. Release rates for continuous releases are in units of liters per second for liquids and solids, and units of cubic meters per second for gases. Puff release quantities are in units of liters for solids and liquids and units of cubic meters for gases.

This page intentionally left blank.

5.3.2 Accident Analysis Scenarios

This section analyzes representative accidents as selected in the TWRS facilities hazard analysis. Supplemental accident analyses specific to the projects are included in the designated addenda. The accident analysis for WRSS operations is presented in Addendum 1. The accident analysis for the replacement cross-site transfer system is presented in Addendum 2. The accident analysis for the 702-AZ ventilation system is presented in Addendum 3. The accident analysis for the 241-AZ-101 mixer pump test is presented in Addendum 4. The purpose of the accident analysis is to quantify the accident frequency and consequences of scenarios and to identify the associated necessary and sufficient set of controls that ensure tank farm operations can be conducted without undue risk to onsite workers or the public. The results of the analyses are also used in the selection of controls to protect facility workers and the environment.

Background information is presented for each accident under the headings "Purpose of Analysis" and "Analysis Strategy." This is followed by an analysis assuming the absence of controls and, if required, an analysis assuming controls. The controls may be engineered (i.e., safety SSCs) or administrative (i.e., Technical Safety Requirements [TSRs]). An important control decision criteria for the selection of controls is comparison of the accident frequency and consequences to the risk guidelines (Section 5.4.1). In addition to safety SSCs and TSR controls, engineered features and administrative controls that provide Defense-in-Depth are also identified.

Key assumptions are presented for each accident. These assumptions are those used in the analyses that are a function of the facility configuration, condition, or operational practices that, if changed, could invalidate the analysis results. They represent a subset of the complete set of assumptions made in the analysis as documented in referenced calculation note documents. The key assumptions are specifically identified to assist unreviewed safety question reviewers in evaluations of facility and procedural changes.

In addition to the safety SSCs and TSR controls identified for each representative accident in the following sections, there are two controls implicit to multiple accidents. First is a prohibition of transfer, exclusive of flushing, into single-shell tanks. This is another key element of the TSR Administrative Control on Transfer Controls. The second control involves safety functions assumed in the accident analyses of the single-shell tanks, double-shell tanks, Aging Waste Facility tanks, and their associated waste transfer Systems.[1] The classification of these passive design features as Safety-Class, Safety-Significant, or general services will be provided in the TWRS Final Safety Analysis Report.

Analysis Addressing State Highway 240 Transient Populations. An analysis of the potential consequences to transient individuals on State Highway 240 from four bounding postulated accidents at TWRS facilities was also performed to support the development of emergency response plans for TWRS (HNF-SD-TWR-TI-002, *Analysis of Consequences at State Route 240 from*

[1]Double-contained receiver tanks, catch tanks, process pits, diversion boxes, vault pits, cleanout boxes, and transfer lines.

Postulated Accidents at Tank Waste Remediation System Facilities to Support Development of Emergency Response Plans). State Highway 240 is a two-lane highway that runs through the Hanford Site and passes near TWRS facilities. For each postulated accident (a spray leak, a flammable gas deflagration in a double-shell tank, a flammable gas deflagration in a single-shell tank, and an organic salt-nitrate reaction), the radiological and toxicological consequences at State Highway 240 were calculated. The analyzed accident scenarios included safety structures, systems, and components and TSRs that prevent or mitigate the event. The accident analysis methodology described previously in Section 5.3.1 was used. Toxicological exposure analyses were also performed using the EPIcode.[2] The calculated radiological doses and toxicological exposures were compared with established emergency response guidelines for taking or recommending protective actions. The results of the analysis showed the following:

- For the maximum hypothetical receptor on State Highway 240, the radiological protective action guide of 0.01 Sv (1 rem) committed dose is exceeded for the postulated single-shell tank flammable gas deflagration (0.013 Sv [1.3 rem]) and the organic salt-nitrate reaction (0.17 Sv [17 rem]). The calculated organic salt-nitrate reaction dose is very conservative to encompass uncertainties and unknowns in waste characterization and accident phenomenology.

- The toxicological exposures calculated by the EPIcode for the maximum hypothetical receptor on State Highway 240 are below the toxicological emergency response planning guideline (ERPG-2) for all peak analytes (e.g., ammonia, sodium hydroxide, mercury).

In accordance with DOE/RL-94-02, *Hanford Emergency Response Plan*, an accident (emergency event) whose potential consequences exceeds 0.01 Sv (1 rem) committed dose or ERPG-2 guidelines at State Highway 240 is a Site Area Emergency because the consequences at the facility boundary (100 m [328 ft]) would also exceed these limits. When a Site Area Emergency for a 200 Area facility is declared, a preplanned action is for the Hanford Patrol Operations Center to contact the Washington State Patrol to request closure of State Highway 240 from the Yakima Barricade (north end) to the intersection of State Highway 240, Horn Road, and Route 10 (south end).

Additional protective action decisions in response to Hanford Site emergency events affecting State Highway 240 are the responsibility of the state and counties. The results of the safety analysis for this BIO will be evaluated by the Hanford Site emergency preparedness organization, the existing emergency planning hazards assessment will be revised as necessary, and the postulated results compared to existing emergency plans and procedures. Upon completion of the hazards assessment and comparison to existing emergency planning documents, the results will be communicated to the state of Washington and to Benton, Franklin, or Grant County emergency management agencies, as appropriate. Preplanned protective actions will be developed in concert with the U.S. Department of Energy, Richland Operations Office and the state and counties.

---

[2]EPIcode (Emergency Prediction Information Code) is a trademark of Homann Associates, Inc., Fremont, California.

Control Strategy for Potential Misrouting of Waste Transfers. Misrouting of waste transfers is a potential cause for the following postulated accidents analyzed in the following subsections.

- Subsurface Leak Remaining Subsurface (Section 5.3.2.7)
- Surface Leak Resulting in Pool (Section 5.3.2.18)
- Subsurface Leak Resulting in Pool (Section 5.3.2.19)
- Spray Leak in Structure or From Overground Waste Transfer Lines (Section 5.3.2.20)

The selected safety structure, system, and component and TSR controls provide three levels of defense to prevent or mitigate the risk of these accidents caused by waste transfer misrouting.

The first level of defense requires that the controls selected to prevent or mitigate leaks from waste transfer systems (e.g., Transfer System Covers and Entry Doors, transfer system leak detection systems, periodic ground-level radiation surveys of single-walled direct-buried/bermed lines) are operable or implemented for the "physically connected" topography of the waste transfer. The physically connected topography refers to piping, structures, and tanks and their associated instrumentation as follows:

1. Physically connected piping is any piping which is part of or connected to the transfer route. Piping need not be considered connected to the transfer route if it is physically disconnected by a removal of piping (i.e., air gap) or isolated with a blind flange/process blank. (Note: Closed valves do <u>not</u> physically disconnect piping.)

   The East/West cross-site transfer line is considered physically connected piping only when cross-site waste transfers are in progress. The East/West cross-site transfer line is the piping between 241-UX-154 diversion box and 241-ER-151 diversion box.

   An operable service water pressure detection system is considered to physically disconnect piping on either side of the detection system.

2. Physically connected structures are those structures through which physically connected piping runs, or those structures which could be subject to leakage from physically connected piping.

3. Physically connected tanks are those tanks connected to the transfer route, those tanks connected to the physically connected piping, and those tanks designed to receive leakage from physically connected piping through a drain path.

This first level of defense ensures that, should a mistransfer occur because of a leaking or misaligned isolation valve, controls are operable/implemented, at the point where the waste could be misrouted, to detect and/or mitigate the consequences of a potential waste leak (i.e. spray, pool, underground plume). For example, the transfer system leak detection

systems must be operable in all physically connected structures (i.e., process pits, diversion boxes, vault pits, and cleanout boxes) during the waste transfer.

The second level of defense is the selection of additional controls for identifying waste transfer leaks or misroutings. These controls are the TSRs for periodic material balances and periodic monitoring of interconnected tanks during waste transfers. Upon indication of a significant material balance discrepancy or unexpected tank level rise, the waste transfer would be shutdown to limit the potential quantity of waste leaked or misrouted.

The third level of defense is controls that prevent waste transfer misrouting. These TSR controls included the following.

- Wherever practical, isolation of piping connected to the planned waste transfer path with two closed valves in series.
- Independent verification of the planned waste transfer route.
- Waste transfer system and jumper configuration control.
- Waste transfer system operations by approved procedures.

These controls reduce the likelihood of misrouting during planned waste transfers.

In summary, the selected safety structure, system, and component and TSR controls and their required application during waste transfers provide diversity and multiple levels of defense. The controls minimize the likelihood of a waste transfer misrouting and ensure that, should a waste leak occur as a result of a misrouting, mitigative safety structures, systems, and components or TSR controls are in place to reduce the accident consequences.

References

DOE/RL-94-02, 1996, *Hanford Emergency Response Plan*, Rev. 0, U.S. Department of Energy, Richland Operations Office, Richland, Washington.

HNF-SD-TWR-TI-002, 1997, *Analysis of Consequences at State Route 240 from Postulated Accidents at Tank Waste Remediation System Facilities to Support Development of Emergency Response Plans*, Rev. 0, Duke Engineering & Services Hanford, Richland, Washington.

5.3.2.1 Nuclear Criticality.

Purpose of Analysis: WHC-SD-WM-TI-725, *Tank Farm Nuclear Criticality Review*, evaluated the possibility of a nuclear criticality occurring in tank farm facilities. Considering current plutonium inventories and operating conditions within the scope of this BIO, the discussion concluded that a nuclear criticality accident was not credible in Hanford Site double-contained receiver tanks (DCRTs), double-shell tanks (DSTs), and single-shell tanks (SSTs). The discussion then presented an analysis of a hypothetical criticality accident resulting from the transfer of new plutonium inventory into the tank farms. Based on information in WHC-SD-WM-TI-725, the analysis of this BIO will (1) analyze the possibility of a nuclear criticality occurring in tank farm facilities, and (2) quantify the consequences of the hypothetical criticality incident resulting from the transfer of plutonium to the tank farms.

Analysis Strategy. Many factors were studied to establish a technical basis for safe subcritical storage of wastes in DCRTs, DSTs, and SSTs. These factors included (1) the neutronics of the waste tank system, (2) chemical and physical phenomena, including fluid dynamics factors related to initial deposition of wastes in the tanks; aging of the wastes, and (3) the behavior of the wastes under established operating conditions. In addition to the technical basis described in WHC-SD-WM-TI-725, a detailed discussion of potential tank neutronics is defined in WHC-SD-SQA-CSA-507, *CSER 96-010: Criticality Parameters for Tank Waste Evaluation*. Evaluation of the phenomenology and fluid dynamics is documented in WHC-SD-WM-TI-757, *Fluid Dynamic Particulate Segregation, Chemical Processes, and Natural Ore Analog Discussions that Relate to the Potential for Criticality in Hanford Tanks*.

Collectively, the DSTs and SSTs contain an estimated 500 to 1,000 kg (1,100 to 2,200 lb) of plutonium. Analyses of tank waste samples show that the plutonium content of the waste is primarily associated with the sludge phase. The maximum measured plutonium concentration in a sludge phase is about 0.35 g/L (a single data point for Tank 241-SY-102 gave a concentration of 0.7 g/L).

A conservative waste model was developed for comparing the margin between the plutonium concentration in these samples with the concentration necessary for a criticality. In this model, conservative refers to the neutronic characteristics of the waste. Chemical components of waste with a greater ability to absorb neutrons are assumed to be present at lower than expected concentrations. Chemical components with a greater ability to scatter neutrons are assumed to be present at greater than expected concentrations. The result of these two assumptions is a model in which the concentration of plutonium needed to go critical is minimized. Based on this model, the minimum plutonium concentration needed for criticality is 2.6 g Pu/L in an infinite system. In a finite system, the concentration of plutonium required for criticality is shown in Figure 5.3.2.1-1. As an example, assume the plutonium concentration is 4 g/L. At this concentration, a sphere 3.7 m (12 ft) in diameter or a corresponding total of 106 kg (233 lb) of plutonium is necessary to go critical.

Based on the preceding discussion, the highest sample data points (0.35 and 0.7 g Pu/L) are factors of 7 and 4 respectively below the subcritical concentration limit of 2.6 g Pu/L for an infinite system. Because the waste tanks are not an infinite system, the margin to a criticality is even greater. In most of the DSTs and SSTs, the plutonium concentration in the sludge phase is more than 100 times less than 2.6 g Pu/L. This situation reflects the deliberate controls exercised throughout operation of fuel reprocessing and purification facilities to minimize the plutonium concentration in waste streams.

The model is also based on optimum moderation. Table 5.3.2.1-1 provides the H to Pu values used, where H is the moderator.

The presence of more water than that shown in Table 5.3.2.1-1 means that the system is overmoderated. Overmoderated systems require more plutonium to go critical than the optimum amount shown in the middle column of Table 5.3.2.1-1.

Figure 5.3.2.1-1 is a summary graphic representation of the degree of conservatism that has been included in the criticality safety analysis of the Hanford Site tank wastes. The figure shows the relationship among current tank conditions, historical operating limits, and subcritical limits as a function of mass and plutonium concentration. The "optimized conservative waste model" subcritical limit represents conservatively modeled waste conditions. The "average waste composition" represents subcritical limits for a waste composition representing an average composition of 19 elements from 28 actual tank samples. All cases are calculated assuming a high degree of conservatism (using a spherical geometry). Figure 5.3.2.1-1 shows that even using conditions that are most favorable to criticality, the tank contents are highly subcritical.

In addition to neutronics, the chemical makeup of the waste precludes criticalities based on the controlled plutonium concentration in the process waste streams discharged to the tank farms and the neutron absorber content. A review was performed of the waste streams from the plutonium separation and purification, fuel reprocessing and uranium recovery, plants to the tank farms. The review focused on the plutonium concentration and the chemical constituents of these waste streams. The chemical processes reviewed were:

- Bismuth phosphate process (B Plant and T Plant)
- Reduction-oxidation process (S Plant)
- Metal recovery process (U Plant)
- Plutonium uranium extraction process (PUREX Facility)
- Various processes at the Plutonium Finishing Plant (PFP).

These processes routinely discharged waste to the tank farms. To avoid corrosion of the mild steel of associated tanks, all waste streams were made alkaline before transfer. Historical sample files for these streams show typical plutonium concentrations of less than 0.003 g Pu/L.

Additionally, each waste stream contained either iron, uranium, manganese, aluminum, or zirconium. All of these elements are neutron absorbers. If absorbers are present in sufficiently high concentrations, a criticality is impossible. The subcritical ratio is the ratio of the concentration of the element to the concentration of plutonium above which a criticality can not occur, regardless of the plutonium concentration. The waste streams exceeded at least one of these ratios. Some waste streams contained sufficient chemicals to exceed more than one of the subcritical ratios. The subcritical ratios are given in Table 5.3.2.1-2.

The plutonium in the waste streams from the processing plants exists in the waste tanks in one of the following forms:

- **Adsorbed onto iron or aluminum oxyhydroxides**—The process of making the waste alkaline results in the rapid formation of precipitates of these metals. Iron and aluminum precipitates (as oxyhydroxides) adsorb plutonium from the waste because the plutonium forms precipitates more slowly. The adsorbed plutonium is chemically attached to the metal precipitate. Because both are good neutron absorbers, a criticality would require larger plutonium concentrations than calculated by the model.

- **As an ion within a crystal lattice (solid solution)**—A different co-precipitation mechanism is solid solution formation. In this case, a plutonium ion can replace another metal's ion within a crystalline lattice. Because of the size of the plutonium ion, this can only occur in zirconium-, lanthanum-, or bismuth-bearing waste. Zirconium is a poor absorber of neutrons. However, if present in sufficient quantity (zirconium/plutonium mass ratio of greater than 4,000), a criticality is not possible. This chemical form is only found in a limited number of tanks.

- **In a floc with other oxyhydroxides**—Flocculation of particles can result in plutonium being effectively bonded with other solids. In this form, greater concentrations of plutonium are required for criticality than are calculated by the conservative waste model.

- **Dissolved in liquid**—Experimental and theoretical work documented in WHC-SD-WM-TI-757 shows that the concentration of plutonium in the waste tank liquids cannot exceed 0.2 g Pu/L. The peak concentration occurs in fresh solutions that have high carbonate concentrations. It was also shown by experiment that aging reduces the concentration in tank liquids by an order of magnitude or more.

- **As plutonium oxyhydroxide precipitate**—If pure hydrous plutonium oxide formed as a crystalline precipitate when acidic wastes were made alkaline, the plutonium oxide particles would be expected to agglomerate or mix with neutron absorbers. For nuclear criticality to occur for either of the latter cases, large plutonium particles, tens of micrometers in size and free of neutron absorbers, must be created and then concentrated by hydraulic force. All literature data, as well as calculations for modeling hydraulic operations such as salt well pumping, air lift circulators, and transfer pumps,

indicate that concentration and separation of such plutonium-bearing particles are not plausible.

Because the plutonium in the waste exists in the forms described, higher concentrations of plutonium than predicted by the conservative waste model are needed to achieve criticality.

In summary, the following factors have been analyzed and demonstrate that a criticality in the tank farms is not possible with the existing inventory of plutonium and chemistry in the tanks.

- A conservative waste model was developed. For the inventories in the tanks, a minimum concentration of at least 2.6 g/L plutonium was shown to be needed for a criticality. This compares to maximum sample concentrations of 0.35 and 0.7 g/L plutonium taken from the tanks.

- Optimum moderation was assumed in the conservative waste model. The wastes contain more water than the optimum condition, and therefore greater concentrations than predicted by the model would be required.

- Wastes from the plutonium processing plants were chemically treated to make them alkaline before they were discharged from the plants. Historical sample results from the plants show maximum concentrations of 0.003 g/L Pu.

- Each of the processing plant waste streams contained either iron, uranium, manganese, aluminum, or zirconium. The waste streams exceed the subcritical ratio for at least one of these elements based on flowsheet composition. Some waste streams contained sufficient chemicals to exceed more than one of the subcritical ratios. This would require concentrations greater than those predicted by the model to achieve criticality.

- Plutonium will undergo at most only minor redistribution as a result of tank farm operations within the scope of this BIO and normal storage.

- The peak concentration of plutonium in waste tank liquids is less than the concentration required for criticality caused by solubility constraints.

- Plutonium in the sludges is either adsorbed onto, agglomerated with, or in the vicinity of solids that have varying capabilities of absorbing neutrons. For certain mass ratios of one of these solids of plutonium, a criticality is impossible. For other solids and ratios, the concentration of plutonium within a given volume must be greater for a criticality to occur than that predicted by the conservative waste model.

- Tank farm operations and activities that redistribute plutonium do so into slab geometry, not spherical geometry. As a result, larger quantities of plutonium are required to go critical.

No credible scenario has been identified leading to a criticality in a DCRT, DST, or SST according to the existing inventory of plutonium that is in the tank farms. For information purposes, the following analysis quantifies the consequences of a criticality event initiated by the hypothetical transfer of a large volume of new waste containing a high plutonium concentration.

5.3.2.1.1 Accident Scenario Assuming No Controls.

Sequence of Events. For the scenario assuming no controls, it is assumed that 500 L of solution with a concentration of 10 g Pu/L is transferred from the PFP to tank farms. The concentration and quantity is based on an estimate of the quantity of plutonium that could conceivably be transferred from PFP providing that multiple failures occurred. Transfers of a higher plutonium concentration would be overly conservative. Lower plutonium concentrations would require too large of a volume and too great of a quantity of plutonium for a criticality to occur. A concentration of 10 g Pu/L could constitute a critical sphere with reasonable diameter and quantity of plutonium.

The PFP is the only plant that stores plutonium and makes associated transfers to tank farms. It is assumed, notwithstanding the inordinate number of failures required, that a solution containing thousands of grams of plutonium accumulates in PFP waste receiver Tank D-8 through repeated and undetected sequential process upsets to a previously empty tank. If the tank is not originally empty or other waste is dumped into the tank between the process upsets, the waste would be diluted causing a decrease in the Pu concentration. The contents of Tank D-8 are then transferred to Tank D-5. Both tanks have a diameter of oyer 3 m and require over 18 kg of Pu to achieve an areal density of 2580 g Pu/m^2, the minimum for a criticality. Because the waste transfer contains only 5 kg of Pu, there is no criticality in either Tank D-8 or Tank D-5 for this size transfer. The contents of Tank D-5 are routed to a previously empty 244-TX DCRT. The transferred waste will not go critical in 244-TX DCRT because this tank has an even larger surface area than Tank D-5. When the Plutonium Finishing Plant waste is transferred to the DST, the waste is postulated to form a compact spherical shape in the existing waste. The radius of this sphere is assumed to increase until a critical volume is reached.

If a criticality is postulated (an incredible event), there would be a fission burst followed by a rapid shutdown. The shutdown is effected as a consequence of fission energy release that results in thermal expansion, density reduction from the formation of very small bubbles, and fissile dilution through mixing from convective currents with expulsion of part of the critical mass. Early in the burst, the small bubbles are formed. As the burst continues, the amount of dissolved gas increases, supporting the formation and expansion of larger bubbles. As the burst terminates, there is a sudden internal pressure relief resulting in rapid steam production and release of dissolved gases. The gases and steam, along with the fission gas and a fraction of the waste, are carried into the headspace of the tank. The increase in the pressure in the headspace is relieved by venting a fraction of the headspace through high-efficiency particulate air filters. The high-efficiency particulate air filters are not ruptured. The pressure of the steam also causes the critical volume to expand and disperse. The tank is large compared with the critical volume and the expansion results in dilution

of the fissile-bearing volume. The associated turbulence and dilution should perturb the fissile bearing volume sufficiently that reassembly into a new critical mass is not reasonable. The DST criticality is therefore modeled as a single burst.

Because the critical volume for a 10 g Pu/L solution has been calculated to be 300 L (WHC-SD-SQA-CSA-507) with a radius of 41.5 cm, the transfer of 500 L is potentially enough to reach a critical condition. At the fill rate of 4.7 L/s, it takes 63 seconds to reach this condition.

Based on the similarity of the postulated DST criticality with the calculations performed by Hetrick 1993, *Computer Models for Predicting the Effects of Criticality Accidents in Solutions*, it is assumed that 89 MJ of energy (equivalent to 2.8 x 10^{18} fissions) is released in the DST criticality with inertial pressures of about 0.6 MPa. Most of the 89 MJ (Hetrick 1993) of fission energy goes into heating the liquid within the critical volume. The temperature of the fissile bearing volume is increased from the power burst until the saturation temperature is reached and steam is generated. About 75% of 89 MJ is needed to raise the liquid temperature from a DST liquid temperature of 48 °C to boiling. This leaves 25% (or 22 MJ) available to create steam. A volume of 15.4 m^3 of steam is produced, raising the pressure in the headspace of a full DST by about 0.0015 Mpa (6 in. of H_2O).

The dose consequences result from the release of radioactive noble gases, iodine, and aerosolized plutonium and tank waste. Of the fission products resulting from the postulated criticality, 100% of the noble gases and 25% of the iodine are assumed to be released to the headspace and then to the environment. The release of particulate fission products is negligible. The high-efficiency particulate air filters are not ruptured by the pressure transient, so the only path out of the tank for the particulates is through unfiltered vent paths, such as around the cracks between cover blocks.

The sequence of events given at the beginning of this section highlights that numerous failures, both human and equipment, would be required to transfer 5 kg of plutonium to the tank farms from the PFP. The frequency is judged to be "beyond extremely unlikely."

Results Summary. The following tables present the onsite and offsite radiological and toxicological consequences for the criticality accident. Supporting calculations are documented in WHC-SD-WM-CN-047, *Calculation Notes That Support Accident Scenario and Consequence For Determination of a Waste Tank Criticality.*

Implications of Results. The radiological doses and toxicological exposures of a criticality assuming no controls are compared with the offsite and onsite risk guidelines in Tables 5.3.2.1-3 and 5.3.2.1-4. Although the accident is considered to have a frequency "beyond extremely unlikely" range (less than 10^{-6}), both the onsite and offsite radiological doses are shown to be acceptable for an accident in the "extremely unlikely" range (frequency of 10^{-6} to 10^{-4} per year). The toxicological sum-of-fractions are well below one, and are shown to be acceptable for an accident in the "extremely unlikely" range, for both onsite and offsite receptors.

5.3.2.1.2 Scenario Assuming Controls. An accident scenario assuming accident controls was not developed as a criticality is not credible.

5.3.2.1.3 Key Assumptions. Key assumptions relating to the frequency and consequences of a criticality accident are presented below.

Important to Frequency.

1. Five hundred to 1,000 kg (1,100 to 2,200 lb) of plutonium were sent to the tank farms. Future waste additions will not significantly increase this total.

2. The plutonium is scattered in all of the tanks.

3. Non-aged (i.e., fresh) plutonium containing liquids with high carbonate (>1M) concentrations do not exist in the tanks and will not be transferred into the tanks.

4. The existing wastes are alkaline and future additions will be alkaline. As a result most of the Pu is in solid form along with the important neutron absorbers and the attractors of plutonium (i.e., chemicals that result in attachment of plutonium because of adsorption, solid solution, flocculation, and attraction of metals by hydroxides).

5. Only mechanical movement and separation of plutonium occurs within the tanks. No chemical separations occur.

5.3.2.1.4 Controls. The controls described in this section apply to DCRTs, DSTs, and SSTs.

Safety Structures, Systems, and Components. A criticality is not credible. The consequences of the hypothetical criticality presented were within guidelines for an extremely unlikely event. Therefore, no Safety-Class or Safety-Significant structures, systems, and components are required.

Technical Safety Requirement Controls. Table 5.3.2.1-5 presents Technical Safety Requirement controls that protect some of the key assumptions.

In general, limits are provided on concentration, alkalinity, and neutron absorbers. Tank farms receive wastes from some facilities which may contain very low concentrations of plutonium (e.g., B Plant, 222-S Laboratory, and 340 Facility which collects laboratory wastes in the 300 Area). Shipments from the 340 Facility from mid-1994 to mid-1996, for example, contained plutonium in amounts ranging from a few hundredths of 1 g up to 3 g in liquid batches ranging from a few thousand gallons up to about 10,000 gallons. The facility typically may make a half dozen such shipments per year.

For wastes containing less than 0.001 g Pu/L, neutron absorbers are not necessary and are not required. The maximum expected concentration of dissolved plutonium range from about 0.002 to 0.2 g/L, depending on the hydroxide and carbonate concentrations in the waste solution (Yamaguchi et al. 1994, *Effects of Complexation on Solubility of Pu(IV) in*

Aqueous Carbonate System). Generally, the more carbonate that is present, the more plutonium can be dissolved in this range. By maintaining plutonium concentration in incoming waste streams below the solubility range given, the plutonium will not precipitate unless the solution were intentionally made strongly alkaline (e.g., 2M). The lower the concentration of plutonium, the more difficult it is to precipitate. Even if the plutonium were to precipitate, the total amount of these shipments is small and would not result in a criticality concern.

Defense-in-Depth. No structures, systems, and components or administrative controls have been identified that provide Defense-in-Depth.

5.3.2.1.5 References.

Hetrick, D. L., 1993, *Computer Models for Predicting the Effects of Criticality Accidents in Solutions*, Topical Meeting on Physics and Methods in Criticality Safety, Nashville, Tennessee, September 19-23, 1993, pp. 80-86.

WHC-SD-SQA-CSA-507, 1996, *CSER 96-010: Criticality Parameters for Tank Waste Evaluation*, Rev. 0, Westinghouse Hanford Company, Richland, Washington.

WHC-SD-WM-TI-725, 1996, *Tank Farm Nuclear Criticality Review*, Rev. 0A, Westinghouse Hanford Company, Richland, Washington.

WHC-SD-WM-TI-757, 1996, *Fluid Dynamic Particulate Segregation, Chemical Processes, and Natural Ore Analog Discussions that Relate to the Potential for Criticality in Hanford Tanks*, Rev. 0, Westinghouse Hanford Company, Richland, Washington.

WHC-SD-WM-CN-047, 1996, *Calculation Notes That Support Accident Scenario and Consequence For Determination of a Waste Tank Criticality*, Rev. 1, Westinghouse Hanford Company, Richland, Washington.

Yamaguchi, T., Y. Sakamoto, and T. Ohnuki, 1994, *Effect of Complexation on Solubility of Pu(IV) in Aqueous Carbonate System. Radiochimica Acta.*, 66/67.

Figure 5.3.2.1-1. Perspective of Hanford Site Waste Tank Subcritical Limits–Plutonium Critical Mass Versus Concentration (Spherical Geometry).

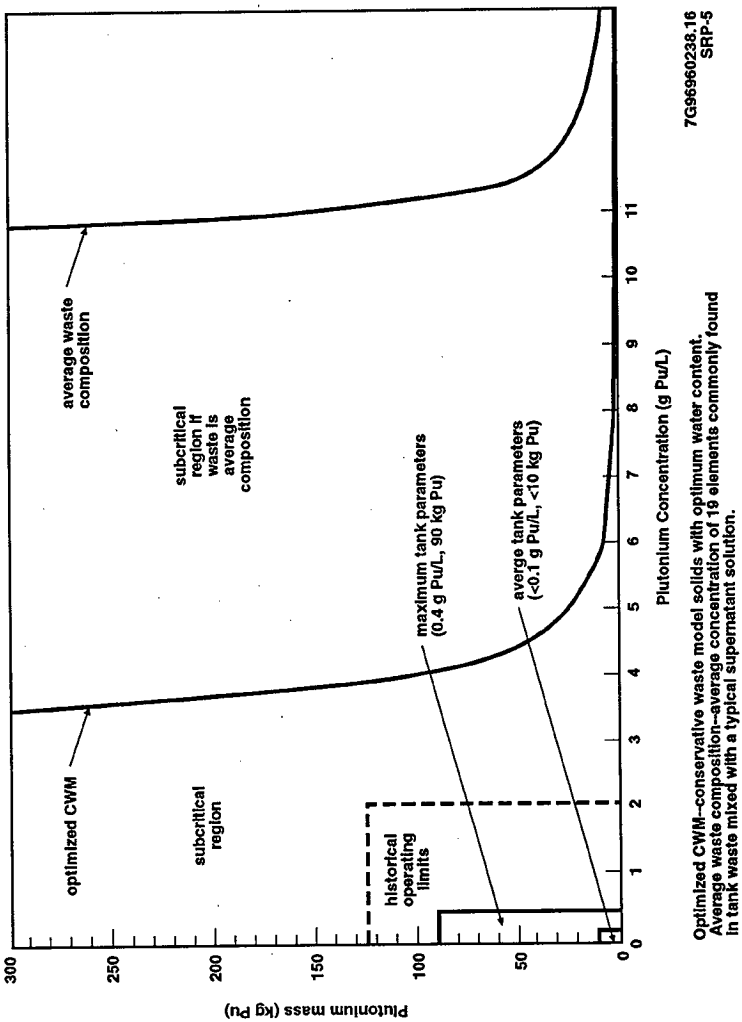

Table 5.3.2.1-1. H to Pu Atom Ratios.

Pu Concentration, g/L	Optimum H/Pu atom ratio used in model	Optimum water, g/L
2.6	100	10
4	500	75
10	1,500	565
30	500	565

Table 5.3.2.1-2. Subcritical Ratios.

Element	Mass ratio of element to plutonium above which criticality is not possible
Aluminum	910
Zirconium	4,000
Chromium	135
Iron	160
Manganese	32
Nickel	105
Uranium (natural)	770

Table 5.3.2.1-3. Radiological Consequences for Waste Tank Criticality.

	Pathway	Onsite (mSv)	Offsite (mSv)
Fission gas	inhalation	23	0.013
	submersion	15	0.01
Tank waste	inhalation and submersion	0.005	3.7 E-06
Plutonium	inhalation and submersion	2	1.9 E-03
Total		40 (4 rem)	0.025 (2.5 mrem)
Risk Guideline for an "extremely unlikely" event (10^{-6} to 10^{-4} per yr)		100 (10 rem)	40 (4 rem)

mSv = millisievert

Table 5.3.2.1-4. Summary of Toxicological Consequences for Nuclear Criticality Accident Scenario.

Receptor location	Calculated sum-of-fractions for an "extremely unlikely" event (10^{-6} to 10^{-4} per yr)	Risk acceptance guideline
Onsite	3.9 E-03	1
Offsite	1.6 E-07	1

Table 5.3.2.1-5. Technical Safety Requirement Controls for Nuclear Criticality Accident Scenario.

Control	Safety function	Comments
Nuclear Criticality Safety Program Key elements • Establish CPSs based on CSERs • For transfers into the tank farms (excluding 242-A Evaporator and caustic/water additions) limits on pH ≥8, neutron absorber to plutonium ratio > subcritical mass ratio (unless solution Pu concentration ≤0.001g/L), and plutonium concentration <0.04 g/L averaged over the entire volume of the transferred waste • Independent verification of documented results • Recovery actions if limits are exceeded • Criticality training program • MISF activities prohibited until waste characterization (gas monitoring and sampling allowed)	Prevents the occurrence of a nuclear criticality	None

CPS = criticality prevention specification.
CSER = criticality safety evaluation report.
MISF = miscellaneous inactive storage facility.

This page intentionally left blank.

5.3.2.2 HEPA Filter Failure - Exposure to High Temperature or Pressure. Passive or active high-efficiency particulate air (HEPA)-filtered ventilation is maintained across single-shell tanks (SSTs) and double-shell waste tanks (DSTs), double-contained receiver tanks (DCRTs), the 204-AR Waste Unloading Facility, the 244-AR Vault, the W-213 Dry Waste Compactor Facility, and 7 of 12 catch tanks (listed in Table 5.3.2.2-1). A description of these ventilation systems and facilities is provided in Appendix B.

In the following two sections, potential releases of radioactive and hazardous materials resulting from HEPA filter failures are evaluated. Section 5.3.2.2.1 presents an accident analysis of HEPA filter failure caused by exposure to high temperatures. Section 5.3.2.2.2 presents a nonmechanistic consequence analysis of HEPA filter failure caused by exposure to high pressure.

5.3.2.2.1 HEPA Filter Failure - Exposure to High Temperature.

Purpose of Analysis: High temperatures associated with an external fire (occurring in close proximity to a HEPA filter system) or the failure of an in-line heater (present in some HEPA filter systems) could degrade the ventilation system filters. If the integrity of the filters were compromised, the inventory on the filters could be released, followed by an unfiltered release from the tank vapor space.

Analysis Strategy: The hazard analysis identified two potential hazardous conditions associated with HEPA filter systems. The first is a fire associated with a ventilation system that releases the inventory on the filters and results in an unfiltered pathway. The second is an unfiltered release resulting from seal failure, a defective or deteriorated HEPA filter, or improper installation of a HEPA filter. The analysis strategy is to produce a bounding estimate for all failures of HEPA filters caused by exposure to high temperatures. Because of the additional release associated with the filter inventory, the fire scenario was analyzed as bounding.

Accident Scenario Assuming No Controls

Sequence of Events. A generic accident scenario was developed that applies to each HEPA filter system configuration associated with the Tank Waste Remediation System facilities identified in Section 5.3.2.2, "HEPA Filter Failure - Exposure to High Temperature or Pressure." The postulated scenario assumes that a fire occurs in or around a ventilation system, the heat from the fire degrades the filters, a fraction of the inventory of tank waste accumulated on prefilters (if present) and HEPA filters is released, and an unfiltered release pathway is established. For actively ventilated systems, the exhaust fans continue to run. Releases from the unfiltered pathway are assumed to continue for up to one year. In addition, heat from the fire releases a fraction of the inventory of tank waste accumulated on ventilation system ductwork. The amount of accumulated material is assumed equal to the loading on one stage of HEPA filtration.

The total consequences of this event are calculated by adding the consequences due to the amount of respirable material released during the HEPA filter failure and the amount of respirable material released during the

subsequent continuous, unfiltered release following the filter failure. Consequences resulting from the unfiltered release pathway were calculated for 12 hours (onsite receptor), 24 hours (offsite receptor), and one year (onsite and offsite receptors). For the one year unfiltered release to the onsite receptor, the dose is adjusted by an occupancy factor of 0.286 to account for the actual time spent at work.

The consequences created as a result of the annual unfiltered release were calculated because the ventilation systems operate continuously such that the release duration is essentially infinite in the absence of controls. This is in contrast to other potential accidents that have a finite duration. The consequences as a result of the annual unfiltered release show the sensitivity of the analysis to assumptions regarding release duration and were used in conjunction with the 12- and 24-hour consequences to select the necessary and sufficient set of controls.

The event frequency for this overtemperature accident scenario is "anticipated" ($> 10^{-2}$ to $\leq 10^{0}$) based on the initiating event frequency for either a heater failure or an external fire. Heaters in the ventilation system have failed in the past resulting in high temperatures in the exhaust air and some degradation of the filters has been observed. The failure of the heater to shut-off could create an overtemperature situation and cause the failure of the filters in the ventilation system. An external fire around the ventilation system would likely cause a filter degradation, as analyzed here. This event frequency is consistent with the analysis presented in Section 5.3.2.3, "Fire in Contaminated Area," that evaluates the consequences of a fire in a contaminated area.

Results Summary. The onsite and offsite radiological and toxicological consequences for the scenario assuming no controls are presented in Table 5.3.2.2-1. The associated calculations are documented in WHC-SD-WM-CN-062, *HEPA Filter Failure by Fire or Heater Overtemperature and Subsequent Unfiltered Release* and HNF-SD-WM-CN-099, *Radiological and Toxicological Analyses of Tank 241-AY-102 and Tank 241-C-106 Ventilation Systems*.

Implications of Results. The onsite and offsite consequences for SSTs with passive ventilation, DCRTs, 204-AR Waste Unloading Facility, 244-AR Vault, the W-213 Dry Waste Compactor Facility, and the catch tanks are below the risk guidelines. Accordingly, no controls are required for these systems.

The offsite consequences for SSTs with active ventilation and DSTs (including AWF tanks) are below the risk guidelines. However, the onsite consequence values for DSTs (including AWF tanks) and for SSTs with active ventilation are above the risk guidelines. Therefore, controls are required for these systems.

Note that all toxicological consequence values (both onsite and offsite) shown in Table 5.3.2.2-1 are below risk guidelines.

Accident Scenario Assuming Controls

Sequence of Events. A continuous air monitor (CAM) interlock that detects increased radiation levels in the exhaust air and shuts off the ventilation system is selected to mitigate the consequences of a HEPA filter failure from high temperature. This control is applicable to DSTs (including AWF tanks) and actively ventilated SSTs.

Similar to the accident assuming no controls, a fire is postulated to occur in or around the ventilation system. Heat from the fire degrades the filters; a fraction of the inventory of tank waste accumulated on prefilters (if present), HEPA filters, and ductwork is released; and an unfiltered release pathway is created. Because of the CAM interlock system, however, the ventilation system shuts off within 10 minutes, thereby terminating the unfiltered release.

The event frequencies assuming controls are the same as the frequencies assuming no controls because the CAM interlock system has no effect on frequency.

Results Summary. The onsite and offsite radiological consequences for the scenario assuming controls are presented in Table 5.3.2.2-2. No toxicological consequences for the scenario assuming controls were calculated as the toxicological guidelines were met for the scenario assuming no controls. The associated calculations are documented in WHC-SD-WM-CN-062 and HNF-SD-WM-CN-099.

Implications of Results. The onsite consequences for SSTs with active ventilation and DSTs (including AWF tanks) are below the risk guidelines.

Key Accident Scenario Assumptions. Key assumptions related to the derivation of the accident frequency and calculation of the accident consequences as documented in WHC-SD-WM-CN-062 and HNF-SD-WM-CN-099 are summarized in the following paragraphs.

Important to Accident Frequency. No assumptions related to the facility design or operation have been made in the analysis that are important in relation to the accident frequency.

Important to Accident Consequences. The following assumptions are important to the calculation of accident consequences for a HEPA filter failure because of fire:

- Ventilation system configuration is as described in Appendix B
- Filter dimensions are as described in WHC-SD-WM-CN-062 and HNF-SD-WM-CN-099
- SST active ventilation flow rate is 3,300 L/s (7,000 cfm)
- SST passive ventilation flow rate is 0.68 L/s (1.4 cfm)
- DST active ventilation flow rate is 550 L/s (1,170 cfm)

- AWF tank active ventilation flow rate is 1,890 L/s (4,000 cfm)
- DCRT active ventilation flow rate is 1,980 L/s (4,200 cfm). This value is based on the ventilation flow rate associated with the 244-CR Vault. This is conservatively high from the standpoint of representing the balance of the DCRTs because they are bounded by a ventilation capacity of 94.4 L/s (200 cfm)
- 204-AR Waste Unloading Facility active ventilation flow rate is 940 L/s (2,000 cfm)
- 244-AR Vault active ventilation flow rate is 7,080 L/s (15,000 cfm)
- W-213 Dry Waste Compactor Facility active ventilation flow rate is 940 L/s (2,000 cfm)
- Catch tanks have inlet HEPA filters only
- Contact dose rate measured on individual prefilter and HEPA filter housings is less than or equal to 2 mSv/h (200 mrem/h). This dose rate was used to calculate the quantity of waste material accumulated on filters based on the radionuclide content. This quantity of waste also defines the toxicological source term.
- The filter media making up the HEPA filters is made of fiberglass (or other non-combustible material). There is no paper (or other highly combustible) filter media used in the Tank Farm ventilation systems HEPA filters.
- Contact dose rate measurements are performed at the location defined in WHC-SD-WM-CN-033, *MICROSHIELD Dose Rate Calculations for HEPA Filters and Prefilters* for all ventilation systems identified in this section except the 296-P-16 ventilation system which is used in the 241-C Tank Farm, the 296-S-15 ventilation system which is used in the 241-SX Tank Farm, and the 702-A ventilation system which is used in the 241-AY and 241-AZ Tank Farms. Specific analyses of the 296-P-16, 296-S-15, and the 702-A ventilation systems are provided in HNF-SD-WM-CN-099.
- CAM interlock will detect and shut off active DST (including AWF tanks) and SST ventilation within 10 minutes
- The products of combustion will not cause the CAM interlock to malfunction or result in delayed operation
- An unfiltered release from the W-213 Dry Waste Compactor Facility or catch tanks was not calculated because these facilities do not routinely contain a significant airborne source term.
- The analysis results bound the consequences associated with a release from any inlet HEPA filters that may be present on DSTs.

Controls

Safety Structures, Systems, and Components. CAM interlocks on the ventilation systems are designated Safety-Significant structures, systems, and components for this accident as shown in Table 5.3.2.2-3.

Technical Safety Requirement Controls. There are Technical Safety Requirement controls on HEPA filters and CAM interlocks as shown in Table 5.3.2.2-4.

Defense-in-Depth. Table 5.3.2.2-5 shows the Defense-in-Depth controls for this accident.

5.3.2.2.2 HEPA Filter Failure - Exposure to High Pressure.

Purpose of Analysis: A pressure differential of 2.5 kPa (0.36 lb/in^2 [10 in. water gauge]) can fail HEPA filters. Upon failure, the inventory on the filters could be released, followed by an unfiltered release from the tank vapor space. The purpose of this analysis is to provide a common set of reference values to be used in analyzing potential accidents that could raise tank pressures to greater than 2.5 kPa. These accidents include the following: steam intrusions (Section 5.3.2.5), flammable gas deflagrations (Section 5.3.2.14), organic salt-nitrate reactions (Section 5.3.2.17), organic solvent fire (Section 5.3.2.15), tank bump (Section 5.3.2.22), and in-tank fuel fire/deflagrations (Section 5.3.2.16).

Analysis Strategy: The analysis strategy is to perform a bounding, representative consequence analysis of a HEPA filter failure caused by high pressure to provide a common set of reference values for the accidents identified in the Purpose of Analysis.

Accident Scenario Assuming No Controls

Sequence of Events. An overpressurization event is postulated to occur within a waste tank, all prefilters and HEPA filters in the ventilation system fail because of the pressure increase, a fraction of the inventory of tank waste accumulated on the filters plus the ventilation system ductwork is released, and an unfiltered release pathway is established.

Doses calculated for the HEPA filter overpressurization accident are not related to an event frequency nor compared with guideline limits. This is because the potential accidents that can generate high pressures identified earlier differ in frequency and guideline limits for radiological consequences as a function of event frequency. The section describing the specific accident scenario (see Purpose of Analysis) will provide such information. Toxicological exposure consequences are calculated by using a frequency-dependent sum-of-fractions methodology. This analysis presents sum-of-fractions values for the anticipated frequency category.

Results Summary. Tables 5.3.2.2-6 and 5.3.2.2-7 present the onsite and offsite radiological and toxicological consequence values for releases from failed HEPA filters because of an overpressurization event. These values combine the consequences associated with the release from the filters because

of overpressurization with the unfiltered release consequences calculated for a HEPA fire as in Section 5.3.2.2.1. The associated supporting calculations are documented in WHC-SD-WM-CN-062, WHC-SD-WM-CN-063, *Releases From Failed HEPA Filter Due to an Overpressurization Event*, and HNF-SD-WM-CN-099 for the 296-P-16 ventilation system that is used in the 241-C Tank Farm, the 296-S-15 ventilation system which is used in the 241-SX Tank Farm, and the 702-A ventilation system that is used in the 241-AY and 241-AZ Tank Farms.

Implications of Results. The consequences are used in the scenarios identified in purpose of analysis.

Accident Scenario Assuming Controls. Controls are selected on an accident-specific basis; thus, appropriate controls are described in the applicable sections discussing the accidents identified in the Purpose of Analysis.

Key Accident Scenario Assumptions

Important to Accident Frequency. No assumptions have been made in the analysis that are important in relation to the accident frequency.

Important to Accident Consequences. The assumptions important to the calculation of accident consequences are the same as those for a HEPA failure from high temperatures, except that the CAM interlock and combustion product assumptions do not apply.

Controls. The controls established to mitigate the risk associated with HEPA filter failure caused by high pressure are discussed in this section. The applicability of these controls is specified in the associated tables.

Representative accident scenario:

- **Safety Structures, Systems, and Components**—The safety structures, systems, and components are defined according to the specific accident scenario. Thus, appropriate safety structures, systems, and components are described in the applicable sections discussing the accidents identified in the purpose of analysis.

- **Technical Safety Requirement Controls**—Technical Safety Requirement controls are developed for specific accident scenarios. Thus, appropriate controls are described in the applicable sections discussing the accidents identified in the purpose of analysis. A Technical Safety Requirement control is established for HEPA filter loading (Table 5.3.2.2-4).

  - 2 mSv/h (200 mrem/h) material loading on filter arrays.

- **Defense-in-Depth**—Additional controls that provide Defense-in-Depth apply according to the specific accident scenario. Thus, appropriate Defense-in-Depth controls are described in the applicable sections discussing the accidents identified in the purpose of analysis.

5.3.2.2.3 References

HNF-SD-WM-CN-099, 1998, *Radiological and Toxicological Analyses of Tank 241-AY-102 and Tank 241-C-106 Ventilation Systems*, Rev. 1A, Fluor Daniel Northwest, Inc., Richland, Washington.

WHC-SD-WM-CN-033, 1996, *MICROSHIELD Dose Rate Calculations for HEPA Filters and Prefilters*, Rev. 0, Westinghouse Hanford Company, Richland, Washington.

WHC-SD-WM-CN-054, 1996, *Waste Tank Ventilation System Waste Material Accumulations*, Rev. 0, Westinghouse Hanford Company, Richland, Washington.

WHC-SD-WM-CN-062, 1996, *HEPA Filter Failure by Fire or Heater Overtemperature and Subsequent Unfiltered Release*, Rev. 2, Duke Engineering & Services Hanford, Richland, Washington.

WHC-SD-WM-CN-063, 1996, *Releases From Failed HEPA Filter Due to an Overpressurization Event*, Rev. 2, Duke Engineering & Services Hanford, Richland, Washington.

This page intentionally left blank.

Table 5.3.2.2-1. Consequences and Frequencies Assuming No Controls for High-Efficiency Particulate Air Filter Failure-Exposure to High Temperature.

Accident	Consequences								Frequency
	Radiological (Sv)[a]				Toxicological (SOF)				Without controls
	Calculated dose		Risk guideline		Calculated dose		Risk guideline		
	Onsite[b]	Offsite[c]	Onsite	Offsite	Onsite	Offsite	Onsite	Offsite	
SSTs with active ventilation[f]	5.9 E-03 7.1 E-02[d]	8.5 E-06 8.2 E-05[d]	5.0 E-03	1.0 E-03	8.9 E-01	5.9 E-05	1(ERPG-1)	1(PEL-TWA)	Anticipated
SSTs with passive ventilation configuration 1	4.3 E-06 1.8 E-05[d]	4.5 E-09 2.0 E-08[d]	5.0 E-03	1.0 E-03	1.5 E-02	4.9 E-07	1(ERPG-1)	1(PEL-TWA)	Anticipated
SSTs with passive ventilation configuration 2	2.4 E-06 1.6 E-05[d]	2.8 E-09 1.8 E-08[d]	5.0 E-03	1.0 E-03	5.7 E-03	1.9 E-07	1(ERPG-1)	1(PEL-TWA)	Anticipated
Double-contained receiver tanks	1.8 E-04 2.2 E-03[d]	2.4 E-07 2.4 E-06[d]	5.0 E-03	1.0 E-03	6.6 E-02	2.3 E-06	1(ERPG-1)	1(PEL-TWA)	Anticipated
DSTs	2.7 E-03 3.3 E-02[d]	3.8 E-06 3.7 E-05[d]	5.0 E-03	1.0 E-03	8.3 E-02	5.0 E-05	1(ERPG-1)	1(PEL-TWA)	Anticipated
AWF Tanks[g]	2.1 E-03 2.6 E-02[d]	3.6 E-06 3.5 E-05[d]	5.0 E-03	1.0 E-03	3.8 E-01	1.6 E-04	1(ERPG-1)	1(PEL-TWA)	Anticipated
204-AR Waste Unloading Facility	4.7 E-05 5.6 E-04[d]	6.6 E-08 6.3 E-07[d]	5.0 E-03	1.0 E-03	7.0 E-02	1.6 E-06	1(ERPG-1)	1(PEL-TWA)	Anticipated
244-AR Vault	3.4 E-04 4.3 E-03[d]	4.9 E-07 4.8 E-6[d]	5.0 E-03	1.0 E-03	7.6 E-02	6.8 E-06	1(ERPG-1)	1(PEL-TWA)	Anticipated
W-213 Dry Waste Compactor Facility	6.7 E-07	5.8 E-10	5.0 E-03	1.0 E-03	2.8 E-02	3.3 E-07	1(ERPG-1)	1(PEL-TWA)	Anticipated
Catch tanks[e]	6.7 E-07	5.8 E-10	5.0 E-02	5.0 E-03	2.8 E-02	3.3 E-07	1(ERPG-1)	1(PEL-TWA)	Anticipated

[a] To convert Sv to rem, multiply by 100.
[b] 12-hour unfiltered release.
[c] 24-hour unfiltered release.
[d] Annual unfiltered release.
[e] Catch tanks do not have dedicated active ventilation systems. Two catch tanks have shared ventilation systems. The 241-A-417 and 241-AX-152 are connected to the 702-A ventilation system via a ventilation line. The ventilation systems for the following catch tanks and DCRTs consist of a breather filter similar to the breather filer assemblies on SSTs: 241-A-350, 241-A-417, 241-EW-151, 241-S-304, 241-AZ-151, 241-AZ-154. The following catch tanks have no HEPA filtration systems: 241-A-302-A, 241-TX-302-C, 241-U-301-B, 241-UX-302-A, and 241-ER-311.
[f] The bounding consequences shown here are for the 296-S-15 ventilation system used in the 241-SX Tank Farm. See the HEPA filter dose contribution results and additional discussion documented in Attachments 5 and 7 of HNF-SD-WM-CN-099, 1998, Radiological and Toxicological Analyses of Tank 241-AY-102 and Tank 241-C-106 Ventilation Systems, Rev. 1, Fluor Daniel Northwest, Inc., Richland, Washington.
[g] See Attachments 5 and 7 of HNF-SD-WM-CN-099 for the HEPA filter dose contribution results for this ventilation system (i.e., 702-A).

AWF = Aging Waste Facility.
DCRT = double-contained receiver tank.
DST = double-shell tank.
ERPG = Emergency Response Planning Guideline.
HEPA = high-efficiency particulate air (filter).
PEL = permissible exposure limit.
Sv = sievert.
SOF = sum-of-fractions.
SST = single-shell tank.
TWA = time-weighted average.

Table 5.3.2.2-2. Consequences and Frequencies Assuming Controls for High-Efficiency Particulate Air Filter Failure-Exposure to High Temperature.

Accident	Consequences				Frequency
	Radiological (Sv)[a]				With controls
	Risk guideline		Calculated dose		
	Onsite	Offsite	Onsite	Offsite[b]	
SSTs with active ventilation[d]	5.0 E-03	1.0 E-03	6.7 E-04		Anticipated[c]
SSTs with passive ventilation configuration 1			b		
SSTs with passive ventilation configuration 2			b		
Double-contained receiver tanks			b		
DSTs	5.0 E-03	1.0 E-03	3.8 E-05		Anticipated[c]
AWF Tanks[e]	5.0 E-03	1.0 E-03	1.8 E-04		Anticipated[c]
204-AR Waste Unloading Facility			b		
244-AR Vault			b		
W-213 Dry Waste Compactor Facility			b		
Catch tanks			b		

[a] To convert Sv to rem, multiply by 100.
[b] An analysis assuming controls was not performed because the unmitigated consequence were well within the guidelines.
[c] There is no effect on frequency from the controls.
[d] The bounding consequences shown here are for the 296-S-15 ventilation system used in the 241-SX Tank Farm. See Attachment 5 of HND-SD-WM-CN-099, 1998, Radiological and Toxicological Analyses of Tank 241-AY-102 and Tank 241-C-106 Ventilation Systems, Rev. 1A, Fluor Daniel Northwest, Inc., Richland, Washington for the HEPA filter dose contribution results and additional discussion.
[e] See Attachment 5 of HNF-SD-WM-CN-099 for the HEPA filter dose contribution results for this ventilation system (i.e., 702-A).

AWF = Aging Waste Facility.
DST = double-shell tank.
HEPA = high-efficiency particulate air (filter).
Sv = sievert.
SOF = sum-of-fractions.
SST = single-shell tank.

Table 5.3.2.2-3. Safety Structures, Systems, and Components for High-Efficiency Particulate Air Filter Failure—Exposure to High Temperature.

Structures, systems, or components	Safety classification	Safety function	Comments
Continuous air monitor-interlock on ventilation system	Safety-Significant	Prevent the unfiltered release from occurring for more than 10 minutes	Applies to single-shell tanks with active ventilation and double-shell tanks (including Aging Waste Facility tanks)

HEPA = high-efficiency particulate air (filter).

Table 5.3.2.2-4. Technical Safety Requirement Controls for High-Efficiency Particulate Air Filter Failure—Exposure to High Temperature.

Control	Safety function	Comments
CAM interlock on ventilation system	Detect the high radioactivity and shut off ventilation within 10 minutes. This prevents the potential unfiltered release from occurring for more than 10 minutes	Applies to single-shell tanks (with active ventilation only) and the primary tank ventilation system on double-shell tanks (including Aging Waste Facility tanks)
HEPA Filter Control Program with the following key elements: 1. Periodic radiation survey to monitor HEPA filter loading 2. HEPA filter replacement per change-out criteria, i.e., $\leq$ 2 mSv/h (200 mrem/h)	Reduce consequences from a possible HEPA filter failure by limiting the inventory available	Applies to all HEPA filters and prefilters in the ventilation system

CAM = continuous air monitor.
HEPA = high-efficiency particulate air (filter).
mSv = millisievert

Table 5.3.2.2-5. Defense-in-Depth Controls for High-Efficiency Particulate Air Filter Failure—Exposure to High Temperature.

Control	Function	Remarks
Low Delta P interlock across the HEPA filters on the ventilation system	Shut off the ventilation system to prevent unfiltered release	None
High Delta P alarm on the ventilation system	Direct the operator to shut off the ventilation system because of excessive loading on the filters	Workers trained in responding properly to all alarms
Annual aerosol testing of filters on the ventilation system	Ensure the operability of the filters on the ventilation system	Workers trained in testing the filters
Record sampler	Provide quantitative release amounts reported to state. A higher than normal amount would indicate that an unfiltered release is occurring	Record samplers tested periodically
Interlock/alarm on heater over temperature	Prevent the failure of the ventilation system	Interlock/alarms tested periodically
Periodic surveillance of HEPA Delta P and continuous air monitor	Ensure the operability of the filtration monitoring system	None
HEPA filter replacement typically performed at 1 mSv/h (100 mrem/h)	Limit inventory available for release and limit dose rate to workers in the vicinity of the filters	None

HEPA = high-efficiency particulate air (filter).
mSv = millisievert
*Defense-in-Depth controls shown here apply only to the SSTs with active ventilation and the primary tank ventilation system on DSTs (including AWF tanks).

Table 5.3.2.2-6. Total Radiological Dose Consequences Assuming No Controls for a High-Efficiency Particulate Air Filter Failure—Exposure to High Pressure from a Pressurized High-Efficiency Particulate Air Release Event and a Continuous, Unfiltered Release.

Facility/vent system	Release mechanism	Onsite dose consequences (Sv)[a]		Offsite dose consequences (Sv)	
		12 h	Annual (8,760 h)	24 h	Annual (8,760 h)
241-SX/241-C-106 (SSTs with active ventilation)	HEPA[b] release	4.7 E-02[d]	4.7 E-02[d]	4.1 E-05[e]	4.1 E-05[e]
	Continuous	5.73 E-03	7.12 E-02	8.36 E-06	8.19 E-05
	Total	5.27 E-02	1.18 E-01	4.94 E-05	1.23 E-05
SSTs with passive breather filters (Configuration 1)	HEPA[c] release	3.1 E-04	3.1 E-04	2.8 E-07	2.8 E-07
	Continuous	1.18 E-06	1.47 E-05	1.72 E-09	1.69 E-08
	Total	3.11 E-04	3.25 E-04	2.82 E-07	2.97 E-07
SSTs with passive breather filters (Configuration 2)	HEPA[c] release	1.2 E-04	1.2 E-04	1.0 E-07	1.0 E-07
	Continuous	1.18 E-06	1.47 E-05	1.72 E-09	1.69 E-08
	Total	1.21 E-04	1.35 E-04	1.02 E-07	1.17 E-07
DCRTs	HEPA[c] release	2.8 E-04	2.8 E-04	2.4 E-07	2.4 E-07
	Continuous	1.74 E-04	2.16 E-03	2.41 E-07	2.34 E-06
	Total	4.54 E-04	2.44 E-03	4.81 E-07	2.58 E-06
241-SY/241-AN/241-AP 241-AW (DSTs)	HEPA[c] release	6.7 E-05	6.7 E-05	5.8 E-08	5.8 E-08
	Continuous	2.65 E-03	3.29 E-02	3.77 E-06	3.69 E-05
	Total	2.72 E-03	3.30 E-02	3.83 E-06	3.70 E-05
241-AY/241-AZ (AWF Tanks)	HEPA[b] release	5.7 E-04[d]	5.7 E-04[d]	5.6 E-07[e]	5.6 E-07[e]
	Continuous	2.10 E-03	2.61 E-02	3.56 E-06	3.47 E-05
	Total	2.67 E-03	2.67 E-02	4.12 E-06	3.53 E-05
204-AR Waste Unloading Facility	HEPA[c] release	1.6 E-04	1.6 E-04	1.4 E-07	1.4 E-07
	Continuous	4.53 E-05	5.63 E-04	6.43 E-08	6.30 E-07
	Total	2.05 E-04	7.23 E-04	2.04 E-07	7.70 E-07
244-AR Vault	HEPA[c] release	1.6 E-04	1.6 E-04	1.4 E-07	1.4 E-07
	Continuous	3.42 E-04	4.25 E-03	4.86 E-07	4.76 E-06
	Total	9.73 E-04	4.41 E-03	6.26 E-07	4.90 E-06
W-213 Dry Waste Compactor Facility	HEPA[c] release	6.7 E-05	6.7 E-05	5.8 E-08	5.8 E-08
	Continuous	NA	NA	NA	NA
	Total	6.7 E-05	6.7 E-05	5.8 E-08	5.8 E-08
Catch tanks	HEPA[c] release	6.7 E-05	6.7 E-05	5.8 E-08	5.8 E-08
	Continuous	NA	NA	NA	NA
	Total	6.7 E-05	6.7 E-05	5.8 E-08	5.8 E-08

[a]To convert sieverts to rem, multiply by 100.
[b]Includes release quantities from ventilation system components as described in Attachment 5 of HNF-SD-WM-CN-099, 1998, Radiological and Toxicological Analyses of Tank 241-AY-102 and Tank 241-C-106 Ventilation System, Rev. 1A, Fluor Daniel Northwest, Inc., Richland Washington.
[c]Includes prefilters, HEPA filters, and accumulation in the ductwork as calculated in WHC-SD-WM-CN-054, 1996, Waste Tank Ventilation System Waste Material Accumulations, Rev. 0, Westinghouse Hanford Company, Richland, Washington.
[d]Value documented in Attachment 5 of HNF-SD-WM-CN-099, for the 296-P-16 ventilation system.
[e]Value calculated by adding inhalation component documented in Attachment 5 of HNF-SD-WM-CN-099 to the ingestion component documented in Attachment 7 of HNF-SD-WM-CN-099.
AWF = aging waste facility.
DCRT = double-contained receiver tank.
DST = double-shell tank.
HEPA = high-efficiency particulate air (filter).
NA = not applicable.
SST = single-shell tank.
Sv = sievert.

Table 5.3.2.2-7. Total Toxicological Exposure Consequences (Sum-of-Fractions) Assuming No Controls from High-Efficiency Particulate Air Filter Failure-Exposure to High Pressure and a Continuous, Unfiltered Release for an Accident Frequency of "Anticipated."

Facility/vent system	Release mechanism	Onsite exposure consequences	Offsite exposure consequences
241-SX/241-C-106 (SSTs with active ventilation)	HEPA release	2.3 E+02[a]	7.2 E-03[a]
	Continuous	1.32 E-02	3.10 E-05
	Total	2.30 E+02	7.23 E-03
SSTs with passive breather filters (Configuration 1)	HEPA release	1.5 E+00	4.8 E-05
	Continuous	2.72 E-06	6.39 E-09
	Total	1.50 E+00	4.80 E-05
SSTs with passive breather filters (Configuration 2)	HEPA release	5.7 E-01	1.8 E-05
	Continuous	2.72 E-06	6.39 E-09
	Total	5.70 E-01	1.80 E-05
DCRTs	HEPA release	6.4 E+00	7.3 E-05
	Continuous	1.92 E-03	1.60 E-06
	Total	6.40 E+00	7.46 E-05
241-SY/241-AN/241-AP 241-AW (DSTs)	HEPA release	2.8 E+00	3.3 E-05
	Continuous	5.50 E-02	4.62 E-05
	Total	2.86 E+00	7.92 E-05
241-AY/241-AZ (AWF Tanks)	HEPA release	1.0 E+02[a]	1.2 E-03[a]
	Continuous	1.90 E-01	1.60 E-04
	Total	1.00 E+02	1.36 E-03
204-AR Waste Unloading Facility	HEPA release	6.9 E+00	8.1 E-05
	Continuous	9.40 E-04	7.90 E-07
	Total	6.90 E+00	8.18 E-05
244-AR Vault	HEPA release	6.9 E+00	8.1 E-05
	Continuous	7.10 E-03	5.96 E-06
	Total	6.91 E+00	8.70 E-05
W-213 Dry Waste Compactor Facility	HEPA release	2.8 E+00	3.3 E-05
	Continuous	NA	NA
	Total	2.8 E+00	3.3 E-05
Catch tanks	HEPA release	2.8 E+00	3.3 E-05
	Continuous	NA	NA
	Total	2.8 E+00	3.3 E-05

[a]Value documented in Attachment 5 of HNF-SD-WM-CN-099, 1998, Radiological and Toxicological Analyses of Tank 241-AY-102 and Tank 241-C-106 Ventilation Systems, Rev. 1A, Fluor Daniel Northwest, Inc., Richland, Washington.

AWF = aging waste facility.
DCRT = double-contained receiver tank.
DST = double-shell tank.
HEPA = high-efficiency particulate air (filter).
NA = not applicable.
SST = single-shell tank.

5.3.2.3 Fire In Contaminated Area.

Purpose of Analysis: Within the TWRS facilities, there are numerous contaminated areas that could release hazardous material should a fire occur. Many of these contaminated areas are associated with the waste transfer system, and some parts of the system, including valve pits, pump pits, and diversion boxes, are routinely accessed.

Analysis Strategy: The hazard analysis performed for the tank farms identified several potential causes for a fire in a contaminated area. Some of these causes were human error in positioning a crane load, pump motor electrical failure, range fire, and a vehicle being driven over a pit cover that ruptures the fuel tank. The fuel tank failure was selected for analysis because it maximizes the energy available for the dispersion of hazardous material.

5.3.2.3.1 Accident Scenario Assuming No Controls.

Sequence of Events. In a fire in contaminated area scenario, an operator is assumed to position a crane close enough to a valve pit that the fuel tank of the crane or nearby support vehicle hits the pit curb, rupturing the tank and spilling fuel into the open pit. An ignition source is assumed present, and the fuel in the pit catches fire. Convection from the fire sweeps the hazardous material out of the pit into the atmosphere where it is transported away from the accident location by atmospheric dispersion phenomena. A valve pit was chosen for this accident scenario because it is larger than the other types of pits and has a drain arrangement that may hold significant quantities of residual waste.

The fire is assumed to last for less than 2 hours. To calculate radiological dose consequences, an acute dispersion coefficient is used, and toxicological exposure consequences are analyzed assuming the total amount of respirable material is released over a period of 15 minutes. These assumptions ensure that both the radiological and toxicological exposure consequences are calculated conservatively.

A frequency of "anticipated" was qualitatively assigned to this unmitigated accident scenario. Investigation showed that the frequency of such an event occurring based on one location and one vehicle would be approximately 9.0×10^{-7} per year ("beyond extremely unlikely"). The frequency analysis was based on the number of miles per hour traveled by a single crane or support vehicle near a single pit, as well as U.S. Department of Transportation statistics involving vehicle-related fires. However, the overall frequency of an event within the TWRS complex (multiple vehicles and locations) is estimated to be much higher (i.e., "anticipated").

Results Summary. Table 5.3.2.3-1 contains a summary of radiological and toxicological consequence values for the fire in a contaminated area accident scenario. The associated calculations are documented in WHC-SD-WM-CN-056, *Fire in a Contaminated Area.*

Implications of Results. The radiological consequences to the onsite receptor for the accident scenario assuming no controls exceed the onsite risk guidelines for an accident frequency in the "anticipated" category. The offsite radiological consequences, however, are well within the risk guidelines. Note that the onsite radiological guidelines are exceeded regardless of the frequency category. Thus, controls are necessary.

The toxicological exposure consequences to an offsite receptor are well within the risk guidelines, but consequences to an onsite receptor are slightly over the risk guidelines.

5.3.2.3.2 Accident Scenario Assuming Controls. As a result of the analysis described in Section 5.3.2.3.1, "Accident Scenario Assuming No Controls," Technical Safety Requirement controls are proposed to prevent the fire in the contaminated area from occurring. These controls, discussed in Section 5.3.2.3.4, "Controls," comprise two key elements of the Tank Farms Ignition Control Program. Because the selected controls are preventive, no consequences were calculated.

5.3.2.3.3 Key Accident Scenario Assumptions.

Important to Accident Frequency. No assumptions related to the facility design or operation have been made in the analysis that are important in relation to the accident frequency.

Important to Accident Consequences. The following assumptions are important to the calculation of accident consequences for a fire in a contaminated area assuming no controls:

- The material at risk is the quantity of residual contamination present in a valve pit before the accident commences assuming a drain in the floor of the pit protrudes 25.4 mm (1 in.) above the floor. Drains are known to be at this level to provide a detectable liquid surface for a leak detector element; thus, this is a reasonable and conservative assumption. The floor slopes from the pit walls to the drain, and the pit is calculated to contain dried residue resulting from 42.0 L (11.1 gal) of material.

- The source term is made up of 67 vol% aging waste facility liquids and 33 vol% aging waste facility solids. Because this is a bounding source term for all possible waste transfers, this assumption is considered conservative.

5.3.2.3.4 Controls. The following controls are applicable for operations and activities involving waste transfer-associated structures and vehicles/cranes.

Safety Structures, Systems, and Components. No safety structures, systems, and components are required.

Technical Safety Requirement Controls. To protect the onsite workers, an ignition control program shall be established with the elements discussed in Table 5.3.2.3-2.

Defense-in-Depth. Additional controls that provide Defense-in-Depth are shown in Table 5.3.2.3-3.

5.3.2.3.5 References.

WHC-CM-4-41, 1996, *Fire Protection Program Manual*, Westinghouse Hanford Company, Richland, Washington.

WHC-SD-WM-CN-056, 1996, *Fire in a Contaminated Area*, Rev. 2, Westinghouse Hanford Company, Richland, Washington.

Table 5.3.2.3-1. Consequences of a Fire in Contaminated Area Assuming No Controls.

Consequences	Onsite dose/exposure		Offsite dose/exposure	
	Calculated dose	Risk guideline	Calculated dose	Risk guideline
Radiological	531 mSv (53.1 rem)	5 mSv (0.5 rem)	4.4 E-01 mSv (4.4 E-02 rem)	1 mSv (0.1 rem)
Toxicological (SOF)	1.2	1 (ERPG-1)	6.3 E-03	1 (PEL-TWA)

ERPG = Emergency Response Planning Guidelines.
PEL = permissible exposure limit.
SOF = sum-of-fractions.
mSv = millisievert.
TWA = time-weighted average.

Table 5.3.2.3-2. Technical Safety Requirement Controls for Fire in Contaminated Area.

Control	Safety function	Comment
Ignition Control Program with the following key elements: 1. Vehicle access within the tank farms shall be limited to vehicles whose fuel systems are protected from damage caused by potential collisions with tank structures 2. Physical barriers shall restrict vehicle access to those above-ground structures outside of tank farm boundaries that can direct liquids into waste tanks. Only vehicles with protected fuel systems shall be allowed within barriers 3. Speed limit controls Emergency Preparedness with the following key element: - Response procedures for fire in contaminated area	Prevent vehicle fuel system damage in the event of collisions with tank structures within the tank farms. Outside the tank farms where vehicle access can not be controlled, prevent vehicle access to tank structures Mitigate the consequences of a fire in contaminated area	None

Table 5.3.2.3-3. Defense-in-Depth Controls for Potential Fire in Contaminated Area.

Control	Safety function	Comment
Fire Protection Program	Fire prevention	Program contains a number of provisions that would prevent fires in a pit from causes other than ruptured fuel tanks
Radiation Protection Program	Facility workers will use masks when working in areas with the potential for airborne contamination	Provides protection for facility workers that would be closest to the accident location
Contamination Control Program	Survey and cleanup of areas with loose surface contamination	For the scenario analyzed, would reduce the concentration and quantity of contamination in the valve pit
Vehicle positioning spotters	Spotters provide additional level of control in positioning cranes/vehicles	Reduces probability of analyzed accident
Tank Farm fences	Provide line of demarcation within which Ignition Control Program key elements related to vehicle fuel systems must be met	Fence gates are typically closed and locked
Vegetation Control Program	Prevent range fires from impacting Tank Farm facilities	None

WHC-CM-4-41,* 1996, Fire Protection Program Manual, Westinghouse Hanford Company, Richland, Washington.

*Refer to Appendix F, "Sitewide Controlled Manual Cross-Reference Table," of the BIO for cross-walk between sitewide controlled manuals (e.g., WHC-CM-X-XX) superseded by Fluor Daniel Hanford, Inc., procedures (e.g., HNF-PRO-X-XXX).

This page intentionally left blank.

5.3.2.4 Evaporator Dump.

Purpose of Analysis: During a loss of electrical power, the 242-A Evaporator is engineered to dump its contents to feed Tank 241-AW-102. This evaporator dump event is the limiting case for a sudden uncontrolled drain of hot evaporator waste to a waste tank. An evaporator dump pressurizes the tank vapor space and releases aerosolized waste to the environment. This analysis develops the scenario for the evaporator dump accident and provides estimates of the potential consequences.

Analysis Strategy: The hazard analysis performed for the tank farms identified an evaporator dump as a potential mechanism for the uncontrolled release of contamination caused by pressurization of Tank 241-AW-102. This section (1) identifies the sequence of events of an evaporator dump scenario, (2) quantifies the postulated material at risk for an evaporator dump scenario assuming no controls, (3) determines the quantity of tank waste anticipated to be released to the environment, and (4) provides an estimate of the radiological and toxicological consequences of the release.

A mathematical model (WHC-SD-WM-CN-060, *Calculation Notes that Support Accident Scenario and Consequence Determination of the Evaporator Dump*) was developed to track the pressure, temperature, aerosol concentration, and exhaust flow from the vapor space of Tank 241-AW-102 during an evaporator dump. The total amount of tank waste released to the environment is the integral of the product of the exhaust flow and aerosol concentration for the duration of the accident.

5.3.2.4.1 Accident Scenario Assuming No Controls.

Sequence of Events. For the evaporator dump scenario assuming no controls, a loss of electricity to both the 242-A Evaporator and the 241-AW Tank Farm is postulated. The 242-A Evaporator, as engineered, discharges the vessel contents to double-shell Tank 241-AW-102. The thermally hot evaporator content mixes as it is dumped into the relatively cooler feed tank waste while spreading across the surface of the existing tank waste. The hot waste spreads across the surface of the existing waste with a layer depth of 0.6-m (2-ft) and a temperature of 55.8 °C (132.5 °F) (the average of the evaporator waste and tank waste temperatures). The 0.6-m (2-ft) layer and 55.8 °C (132.5 °F) temperature are considered conservative. The falling evaporator waste will actually mix, and be cooled by, the double-shell tank waste at some depth below the waste surface as opposed to forming a hot pool that spreads over the surface of the double-shell tank waste and directly heats the vapor space.

The vapor space gas heats as energy is transferred from the waste surface to the vapor space. At the same time, the vapor space volume decreases as the waste level in the tank increases with the addition of evaporator waste. The decrease in vapor space volume and simultaneous increase in vapor space temperature causes an increase in the tank vapor space pressure. The pressure is relieved by some of the vapor space gas venting through both filtered and unfiltered pathways. The ventilation system for Tank 241-AW-102 is assumed to fail as a result of the loss of power.

The tank vapor space pressure reaches a maximum of approximately 2,200 Pa (9 in. W.G.) within the first 12 minutes and then returns to near atmospheric pressure. This pressure does not challenge the structural integrity of the high-efficiency particulate air filters. A small amount of venting continues for two hours as the vapor space gas continues to be heated by the dumped evaporator waste. The consequences for the evaporator dump accident scenario assuming no controls were calculated from the venting (with no filtration) of a portion of the vapor space volume along with its aerosol loading.

Based on three unusual occurrence reports related to evaporator dumps this accident scenario is qualitatively assigned a frequency category of "anticipated."

Results Summary. Table 5.3.2.4-1 summarizes the radiological and toxicological consequence values for the evaporator dump accident scenario. The supporting calculations are documented in WHC-SD-WM-CN-060.

Implications of Results. The unmitigated radiological and toxicological consequences for both the offsite and onsite receptors of the evaporator dump accident scenario are significantly below the risk guidelines. Consequently, no safety structures, systems, and components or Technical Safety Requirement controls are required. Defense-in-Depth controls are identified in Section 5.3.2.4.4, "Controls."

5.3.2.4.2 Accident Scenario Assuming Controls. Analysis of a mitigated evaporator dump accident scenario was not performed because both the onsite and offsite unmitigated radiological and toxicological consequences are below risk guidelines.

5.3.2.4.3 Key Accident Scenario Assumptions.

Important to Accident Frequency. No assumptions have been made in the evaporator dump scenario analysis that are related to the facility design or operation and that are important to the accident frequency.

Important to Accident Consequences. The following assumptions are important to calculation of the evaporator dump accident consequences:

- A maximum volume of 98,421 L (26,000 gal) is dumped through a dump line 10-in. in diameter (WHC-SD-WM-SAR-023, *242-A Evaporator/ Crystallizer Safety Analysis Report*).
- The double-shell tank waste temperature is assumed to be 18 °C (65 °F) with a vapor space temperature of 13 °C (55 °F). The maximum allowable temperature for the evaporator vessel is 93 °C (200 °F) (WHC-SD-WM-SAR-023). The assumed and maximum allowable temperatures give the greatest temperature differential between the vapor space and the evaporator waste to maximize (1) the heat transfer to the vapor space and (2) the vapor space pressure increase resulting from the higher waste temperature.
- WHC-SD-WM-SAR-023 has an Administrative Control that defines the bounding radionuclide inventory for the evaporator waste. The evaporator unit liter dose, 7.7×10^{3}, is based on the

WHC-SD-WM-SAR-023 inventory limit. The toxicological composition of the waste was assumed to be equivalent to double-shell tank liquids.

- No credit is taken for high-efficiency particulate air filters. The maximum differential pressure allowable on the high-efficiency particulate air filter is 2,491 Pa (10 in. W.G.). As long as the tank vapor space pressure remains below 2,491 Pa (10 in. W.G.), the high-efficiency particulate air filter differential pressure maximum is not challenged.

5.3.2.4.4 Controls.

Safety Structures, Systems, and Components. No safety structures, systems, and components are required.

Technical Safety Requirement Controls. No Technical Safety Requirement controls are required.

Defense-in-Depth. Controls that provide Defense-in-Depth for an evaporator dump accident are shown in Table 5.3.2.4-2.

5.3.2.4.5 References.

WHC-SD-WM-CN-060, 1996, *Calculation Notes that Support Accident Scenario and Consequence Determination of the Evaporator Dump*, Rev. 1, Westinghouse Hanford Company, Richland, Washington.

WHC-SD-WM-SAR-023, 1998, *242-A Evaporator/Crystallizer Safety Analysis Report*, Rev. 3, Waste Management Federal Services of Hanford, Inc., Richland, Washington.

Table 5.3.2.4-1. Consequences of an Evaporator 242-A Dump to Tank 241-AW-102.

Consequences	Onsite dose/exposure		Offsite dose/exposure	
	Calculated dose	Risk guideline "anticipated"	Calculated dose	Risk guideline "anticipated"
Radiological	0.44 mSv (0.044 rem)	5 mSv (0.5 rem)	3.7 E-04 mSv (3.7 E-05 rem)	1 mSv (0.1 rem)
Toxicological (SOF)	0.046	1 (ERPG-1)	3.9 E-05	1 (PEL-TWA)

ERPG = Emergency Response Planning Guidelines.
PEL = permissible exposure limit.
mSv = millisevert.
SOF = sum-of-fractions.
TWA = time-weighted average.

Table 5.3.2.4-2. Defense-in-Depth Controls for Evaporator 242-A Dump to Tank 241-AW-102.

Controls	Safety function	Comment
Engineered		
Active ventilation system including HEPA filters	Mitigates the release of radiological or toxicological materials by reducing the release by means of unfiltered pathways	None
Cover blocks	Protects against releasing radiological or toxicological materials through unfiltered pathways	None
Administrative		
TWRS Hazardous Material Protection Program	Prevent/mitigate the consequences to workers from hazardous materials	None
Operating Procedures	Operations are performed approved plant procedures	None

HEPA = high-efficiency air (filter).
TWRS = Tank Waste Remediation System.

5.3.2.5 Steam Intrusion From Interfacing Systems.

Purpose of Analysis: The purpose of this analysis is to evaluate the risks associated with the use of steam jets for transferring waste into the tank farms. Steam jets are used to transfer waste from some process and laboratory facilities within 200 East and 200 West Areas to the tank farms. These facilities include the Plutonium Finishing Plant, 222-S Laboratory, 242-A Evaporator, PUREX, and T Plant. Additionally, although currently inactive, the 244-AR Vault (a Tank Waste Remediation System facility) is considered as a potential point of steam access to the tank farms. Historically, steam was used by the 244-AR Vault to transfer waste to the tank farms, and the lines have not been physically blanked off.

Failure to shut off a steam jet following a waste transfer has the potential to pressurize the tank headspace of the tank receiving waste and result in a release of tank headspace aerosols through unfiltered pathways (cracks in cover blocks or capped risers, or ruptured high-efficiency particulate air (HEPA) filters.

Analysis Strategy: Both double-contained receiver tanks (DCRTs) and double-shell tanks (DSTs) may receive waste transfers via steam jets. A DST was selected for analysis because it has a potentially larger headspace than a DCRT, which would allow for more particulates in a release and would result in greater consequences.

5.3.2.5.1 Accident Scenario Assuming No Controls.

Sequence of Events. In the steam intrusion from interfacing systems scenario, a liquid waste transfer to a DST is initiated from a process facility using a steam jet as the motive force to move the liquid. After the waste has been transferred, the steam jet is not shut off and pure steam is routed to the headspace of the receiving tank. This may occur as a result of operator error or equipment failure. It is assumed that 724 kPa (90 psig) saturated steam is exhausted into the headspace of a partially full DST at a flow rate of 1,090 kg/h (2,400 lbm/h). Higher flow rates and pressures may be possible, but would only pressurize the headspace faster than in the scenario analyzed resulting in the same cumulative dose. The active ventilation system is assumed to shut off because this maximizes the peak tank pressure. Note that if tank ventilation is operating, a sufficiently high pressure could still be reached to result in filter failure.

Steam is assumed to be supplied until the headspace is saturated with steam. The headspace pressure increases to the point where the HEPA filters in the ventilation system fail, thereby creating an unfiltered pathway for the release of the contaminated headspace contents. Additionally, analysis of the tank conditions when the steam in the tank headspace is condensing shows that equalization to atmospheric pressure is easily achievable and will not create an excessive vacuum.

On the basis of the operational history of the tank farms, the scenario assuming no controls is assigned a frequency of "anticipated" (10^{-2} to 10^{0} per year). Although the occurrence reporting database does not include any entries for steam intrusions, prior operational history has shown that events

similar to those in the described scenario have occurred and are still possible today (because steam jets are still used for transferring waste). The frequency of this accident will diminish as the use of steam jets from process facilities is further limited by ongoing and future deactivation activities.

Results Summary. Table 5.3.2.5-1 contains a summary of radiological and toxicological consequence values for the steam intrusion from interfacing systems. Associated calculations are documented in WHC-SD-WM-CN-044, *Calculation Notes That Support Accident Scenario and Consequence Development for the Steam Intrusion From Interfacing Systems Accident.*

Implications of Results. The radiological and toxicological consequence values shown in Table 5.3.2.5-1 are within the risk guidelines; therefore, no structures, systems, and components have been designated Safety-Class or Safety-Significant. Although the unmitigated consequences do not exceed the risk guidelines, a control is necessary to protect analysis assumptions related to the HEPA filter loading. In addition, controls have been identified that provide Defense-in-Depth (Section 5.3.2.5.4, "Controls").

5.3.2.5.2 Accident Scenario Assuming Controls. Because the analyzed accident scenario assuming no controls resulted in radiological consequences below the risk guidelines, no accident scenario assuming controls was developed.

5.3.2.5.3 Key Accident Scenario Assumptions.

Important to Accident Frequency. No assumptions related to the facility design or operation have been made in the analysis that are important in relation to the accident frequency.

Important to Accident Consequences. The following assumptions are important to the calculation of accident consequences for a steam intrusion from interfacing systems:

- To conservatively calculate the source term, the entire volume of contaminated air that was initially present in the headspace (V_{HS} = 3.11 x 10^3 m^3 [1.10 x 10^5 ft^3] of air) is assumed to be vented directly to the atmosphere without being filtered. This is the volume associated with a DST that is approximately half full. Less headspace volume will result in less respirable particulate material available to be released. Doubling the volume of available headspace to be vented would still result in radiological dose consequences below the risk guidelines.

  Additionally, because the tank headspace could be pressurized to a point that would rupture contaminated HEPA filters present in the shutdown ventilation system, the filter material is added to the total released. The values for HEPA filter release amounts (including prefilters and ductwork accumulation) are taken from calculation note, WHC-SD-WM-CN-054, *Waste Tank Ventilation System Waste Material Accumulations.* The amount released (based on a HEPA filter inventory of DST liquids) is 9.79 x 10^{-4} L (2.59 x 10^{-4} gal).

- It is assumed that the airborne source term material both entrained in the headspace and present on the HEPA filters is made up of DST liquids. DST liquids were considered appropriate because DST liquids bound the source term for aging waste facility liquids. Additionally, the use of this source term is consistent with calculations performed in determining the amount of respirable material released from the HEPA filter failure just discussed.

Note that numerous assumptions were made in developing the source of the pressurization in the headspace. These included the pressure and flow rate of the incoming steam, the initial tank headspace temperature, and lack of active ventilation. Because these variables only contribute to the pressurization of the headspace (and not to the consequences) controls to protect analysis assumptions for these variables are not required.

5.3.2.5.4 Controls.

The following controls are applicable for operations and activities at all locations that may receive steam jet waste transfers, including: waste storage tanks (DCRTs, DSTs, including Aging Waste Facility tanks; and catch tanks), waste transfer piping (concrete-encased lines, and pipe-in-pipe-encased lines); and waste transfer-associated structures (process pits, diversion boxes, vault pits, cleanout boxes).

Safety Structures, Systems, and Components. No safety structures, systems, and components are required.

Technical Safety Requirement Controls. Because the unmitigated accident scenario involved the release of HEPA filter contents (including prefilters and ductwork accumulation) as a result of the pressurization, a control has been developed to ensure that HEPA filter loadings do not exceed the values assumed in this analysis. A brief summary of the proposed control is included in Table 5.3.2.5-2.

Defense-in-Depth. Additional controls that provide Defense-in-Depth are shown in Table 5.3.2.5-3.

5.3.2.5.5 References

HNF-SD-WM-CN-044, 1996, *Calculation Notes That Support Accident Scenario and Consequence Development for the Steam Intrusion From Interfacing Systems Accident*, Rev. 2, Fluor Daniel Hanford, Inc., Richland, Washington.

WHC-SD-WM-CN-054, 1996, *Waste Tank Ventilation System Waste Material Accumulations*, Rev. 0, Westinghouse Hanford Company, Richland, Washington.

Table 5.3.2.5-1. Consequences of a Steam Intrusion from Interfacing Systems.

Consequences	Onsite dose/exposure		Offsite dose/exposure	
	Calculated dose	Risk guideline	Calculated dose	Risk guideline
Radiological	4.9 E-01 mSv (4.9 E-02 rem)	5 mSv (0.5 rem)	7.6 E-04 mSv (7.6 E-05 rem)	1 mSv (0.1 rem)
Toxicological (SOF)	4.2 E-01	1 (ERPG-1)	3.7 E-04	1 (PEL-TWA)

ERPG = Emergency Response Planning Guidelines
mSv = millisievert
PEL = permissible exposure limit
SOF = sum of fractions
TWA = time-weighted average

Table 5.3.2.5-2. Technical Safety Requirement Controls for Steam Intrusion from Interfacing Systems.

Control	Safety function	Comment
HEPA Filter Control Program with the following key elements: 1. Periodic radiation survey to monitor HEPA filter loading 2. HEPA filter replacement per change-out criteria, i.e., ≤ 2 mSv/h (200 mrem/h)	Reduce consequences from a possible HEPA filter failure by limiting the inventory available	None

HEPA = high-efficiency particulate air (filter)
mSv = millisievert

Table 5.3.2.5-3. Defense-in-Depth Controls For Steam Intrusion from Interfacing Systems.

Control	Function	Remarks
Tank pressurization alarms	Alarms would notify operations personnel that the tank is being pressurized	Alarm may allow time for shutdown of transfer operation and evacuation of tank farm
Transfer line temperature interlock in place for transfers from PFP	Interlock shuts down transfer operation from PFP at a temperature of < 93.3 °C (≤ 200 °F)	Interlock would prevent accident from occurring
Operating ventilation system (with stack) during steam jet transfers	Operating ventilation system will remove heat and mass from the headspace (meaning it will take longer to pressurize)	Operation allows associated alarms to be active
HEPA filter differential pressure alarms	Alarms notify operations of saturated filter situation	Possibly allows time to shut down steam jet transfer operation
Sending tank level alarms to alert operator	Alarm notifies operator to shut off steam jet when the transfer tank is empty (or at desired level)	Alarms may preclude accident from occurring
Operating procedures	May advise operator of possible hazards associated with the steam jet operation	Outlines proper steps to be taken to prevent accident situation
Operator training	May advise operator of possible hazards associated with the steam jet operation	Outlines proper steps to be taken to prevent accident situation
Emergency Response Plans and Procedures	Reduce the consequences to facility workers and onsite personnel	Outlines proper steps to be taken to evacuate area and mitigate the consequences to personnel
HEPA filter replacement typically performed at 1 mSv/h (100 mrem/h)	Limits inventory available for release and limits dose rate to workers in the vicinity of the filters	None

HEPA = high-efficiency particulate air (filter)
mSv = millisievert
PFP = Plutonium Finishing Plant

This page intentionally left blank.

5.3.2.6 Leak from Railcar/Tank Trailer.

Purpose of Analysis: The 204-AR Waste Unloading Facility receives shipments of liquid radioactive waste for direct transfer to the tank farms. The liquid radioactive waste is generated at facilities not directly connected by piping to the tank farms (e.g., T Plant, 222-S Laboratory, and 340 Facility) and transported by railcar or tank trailer to 204-AR Waste Unloading Facility. At the 204-AR Waste Unloading Facility, the waste is pumped directly from the railcar or tank trailer to a double-shell tank. The Tank Waste Remediation System facilities hazard analysis performed for the unloading facility identified potential hazardous conditions involving the accidental release of liquid radioactive waste from a railcar or tank trailer.

Analysis Strategy: Large liquid releases were postulated to occur both outside and inside the 204-AR Waste Unloading Facility from accidents caused by railcar derailment, railcar or tank trailer collisions, and corrosion or other degradation mechanisms causing railcar or tank trailer leak or failure.

A railcar accident that causes the release of the entire railcar contents to the ground outside the 204-AR Waste Unloading Facility is the bounding representative accident. This accident is considered bounding for several reasons. The total radionuclide inventory allowed in a railcar is higher than a tank trailer based on (1) the shipping requirements for the railcar (WHC-SD-RE-SAP-013, *Safety Analysis Report for Packaging, Railroad Liquid Waste Tank Cars*) and tank trailer (WHC-SD-TP-SEP-011, *Safety Evaluation for Packaging for the 222-S Laboratory Cargo Tank*), and (2) the capacity of the railcar, 75,700 L (20,000 gal), and tank trailer, 18,925 L (5,000 gal). Additionally, a release outside the 204-AR Waste Unloading Facility results in higher consequences because leaks inside the facility must first fill and overflow both the catch tank and pit, which have a combined capacity of 17,030 L (4,500 gal). A fire associated with the liquid waste release was not postulated because the waste is not flammable and is thermally stable.

5.3.2.6.1 Accident Scenario Assuming No Controls.

Sequence of Events. The railcar accident scenario that assumes no controls involves a railcar breach as the railcar is about to enter the 204-AR Waste Unloading Facility. The railcar is derailed, overturned, and breached, and the entire liquid waste contents of the railcar are released. The liquid is assumed to spill from a height of 1.0 m (3.3 ft), splash upon impact with the ground, and form a pool before being absorbed into the soil.

The material at risk assumed to be spilled from the railcar was calculated on the basis of the maximum railcar radionuclide content allowed by WHC-SD-RE-SAP-013. Waste generators that ship by railcar are required to calculate the maximum shipment volume on the basis of the waste radionuclide concentration to ensure compliance with the shipment limits in WHC-SD-RE-SAP-013. That is, for waste with high concentrations of radionuclides, a lower volume of waste is allowed in the railcar. To calculate accident consequences, the railcar material at risk must be equated to waste in a single-shell tank, a double-shell tank, or an aging

waste facility tank. As such, the maximum allowed railcar radionuclide inventory per WHC-SD-RE-SAP-013 is equal to 2,123 L (561 gal) of double-shell tank liquids (WHC-SD-WM-CN-003, *Calculation Notes That Support Accident Scenario and Consequence Development for the Leak from a Railcar/Tank Trailer at the 204-AR Waste Unloading Facility*).

The toxicological composition of the waste delivered to the 204-AR Waste Unloading Facility is not considered in the railcar or the tank trailer safety assessments (WHC-SD-RE-SAP-013 and WHC-SD-TP-SEP-011). Therefore, to evaluate the toxicological consequences of the railcar accident scenario, the waste was conservatively assumed to be equivalent to the chemical composition of double-shell tank liquids. A review of the chemical constituents of wastes that are sent to the 204-AR Waste Unloading Facility indicated that this assumption is reasonable.

An annual frequency of "unlikely" (10^{-4} to 10^{-2} per year) was qualitatively assigned to the railcar accident scenario. National and Hanford Site-specific railroad accident statistics and calculations performed in WHC-SD-RE-SAP-013 and in WHC-SD-WM-CN-021, *204-AR Facility Rail Accident Analysis*, indicate that the frequency of railcar accidents resulting in large spills is less than 1×10^{-4} per year. Therefore, the "unlikely" frequency category is considered appropriate and conservative for the railcar accident scenario.

Results Summary. Table 5.3.2.6-1 contains a summary of the radiological and toxicological consequence values for the leak from a railcar/tank trailer. Associated calculations are documented in WHC-SD-WM-CN-003.

Implications of Results. The radiological dose and toxicological exposure consequence values shown in Table 5.3.2.6-1 are within the risk guidelines; therefore, no structures, systems, and components have been designated Safety-Class or Safety-Significant. A control is necessary, however, to protect the analysis assumption that waste transported to the 204-AR Waste Unloading Facility meets the shipping requirements.

5.3.2.6.2 Accident Scenario Assuming Controls. Because the analyzed railcar accident scenario assuming no controls resulted in radiological dose and toxicological exposure consequences that were below the risk guidelines, no accident scenario assuming controls was developed.

5.3.2.6.3 Key Accident Scenario Assumptions.

Important to Accident Frequency. No assumptions related to the facility design or operation have been made in the railcar accident analysis that are important to the accident frequency.

Important to Accident Consequences. The following assumptions are important to the calculation of accident consequences.

- The material at risk assumed to be spilled was calculated on the basis of the maximum railcar radionuclide content allowed by WHC-SD-RE-SAP-013.
- The waste received at the 204-AR Waste Unloading Facility is not flammable and is thermally stable.

5.3.2.6.4 Controls.

The following controls are applicable for operations and activities at the 204-AR Waste Unloading Facility.

Safety Structures, Systems, and Components. No safety structures, systems, and components are required.

Technical Safety Requirement Controls. A Technical Safety Requirement control is required to protect the analysis assumption that the waste shipment transported to the 204-AR Waste Unloading Facility via railcar complies with WHC-SD-RE-SAP-013 requirements, particularly that the shipment meets the limit on total railcar radionuclide content and that the waste is not flammable and is thermally stable. Similar requirements in the control must ensure that waste shipments made by tank trailer are in accordance with criteria established by WHC-SD-TP-SEP-011, and in accordance with 49 CFR 173.403, "Definitions;" 173.425, "Transport Requirements for Low Specific Activity (LSA) Radioactive Materials"; and 173.435, "Table of A_1 and A_2 Values for Radionuclides." A brief summary of the proposed control is provided in Table 5.3.2.6-2.

Defense-in-Depth. Additional controls that provide Defense-in-Depth for a railcar/tank trailer leak at the 204-AR Waste Unloading Facility are shown in Table 5.3.2.6-3.

5.3.2.6.5 References

49 CFR 173.403, Subpart I, "Definitions," Title 49, *Code of Federal Regulations*, Part 173.403, Subpart I, as amended, U.S. Department of Transportation, Washington, D.C.

49 CFR 173.425, Subpart I, "Transport Requirements for Low Specific Activity (LSA) Radioactive Materials," Title 49, *Code of Federal Regulations*, Part 173.425, Subpart I, as amended, U.S. Department of Transportation, Washington, D.C.

49 CFR 173.435, Subpart I, "Table of A_1 and A_2 Values for Radionuclides," Title 49, *Code of Federal Regulations*, Part 173.435, Subpart I, as amended, U.S. Department of Transportation, Washington, D.C.

WHC-CM-2-14, 1996, *Hazardous Material Packaging and Shipping Manual*, Westinghouse Hanford Company, Richland, Washington.

WHC-SD-WM-CN-003, 1996, *Calculation Notes That Support Accident Scenario and Consequence Development for the Leak from a Railcar/Tank Trailer at the 204-AR Waste Unloading Facility*, Rev. 1, Westinghouse Hanford Company, Richland, Washington.

WHC-SD-WM-CN-021, 1996, *204-AR Facility Rail Accident Analysis*, Rev. 1, Westinghouse Hanford Company, Richland, Washington.

WHC-SD-RE-SAP-013, 1993, *Safety Analysis Report for Packaging, Railroad Liquid Waste Tank Cars*, Rev. 6, Westinghouse Hanford Company, Richland, Washington.

WHC-SD-TP-SEP-011, 1994, *Safety Evaluation for Packaging for the 222-S Laboratory Cargo Tank*, Rev. 0, Westinghouse Hanford Company, Richland, Washington.

Table 5.3.2.6-1. Consequences of a Leak from a Railcar/Tank Trailer.

Consequences	Onsite dose/exposure		Offsite dose/exposure	
	Calculated dose	Risk guideline	Calculated dose	Risk guideline
Radiological	8.5 mSv (0.85 rem)	50 mSv (5 rem)	4.7 E-03 mSv (4.7 E-04 rem)	5 mSv (0.5 rem)
Toxicological (SOF)	5.4 E-01	1	1.5 E-03	1

mSv = millisevert
SOF = sum-of-fractions.

Table 5.3.2.6-2. Technical Safety Requirement Controls for Potential Railcar/Tank Trailer Leaks at the 204-AR Waste Unloading Facility.

Control	Safety Function	Comment
Liquid waste received at the 204-AR Waste Unloading Facility by railcar or tank trailer meets the following requirements before acceptance 1. Nonflammable and thermally stable 2. The radioactive material at risk in the railcar is limited in accordance with SARP WHC-SD-RE-SAP-013, Rev. 6, 1993 3. The radioactive material at risk in the tank trailer is limited in accordance with 49 CFR Parts 173.403, 173.425, and 173.435 and WHC-SD-TP-SEP-011, Rev. 0, 1993	Protect accident analysis assumptions	None

49 CFR 173.425, Subpart I, "Transport Requirements for Low Specific Activity (LSA) Radioactive Materials," Title 49, Code of Federal Regulations, Part 173.425, Subpart I, as amended, U.S. Department of Transportation, Washington, D.C.

WHC-CM-2-14, 1996, Hazardous Material Packaging and Shipping Manual, Westinghouse Hanford Company, Richland, Washington.

WHC-SD-RE-SAP-013, 1993, Safety Analysis Report for Packaging, Railroad Liquid Waste Tank Cars, Rev. 6, Westinghouse Hanford Company, Richland, Washington.

WHC-SD-TP-SEP-011, 1994, Safety Evaluation for Packaging for the 222-S Laboratory Cargo Tank, Rev. 0, Westinghouse Hanford Company, Richland, Washington.

SARP = safety analysis report for packaging.

Table 5.3.2.6-3. Defense-in-Depth Controls for Potential Railcar and Tank Trailer Leaks at the 204-AR Waste Unloading Facility.

Control	Function	Remarks
Operator training	Prevent railcar derailments or tank trailer accidents caused by operator error	The train is operated by a Hanford Site-experienced train crew observing commercial standards for train operations The semi trucks that transport the tank trailers are operated by Hanford Site-trained workers. Drivers possess the proper class of commercial driver's license to safely operate the vehicle
Railroad inspection and maintenance	Prevent railcar derailments caused by poor track conditions	The Hanford Site railroad system is inspected and maintained on a preventive maintenance schedule consistent with commercial standards The track inside the 204-AR Waste Unloading Facility unloading canyon is not normally inspected, unless requested. Because this track is set in concrete, adjustments are not normally required
Railcar and tank trailer design	Prevent leaks or spills of waste	All connections to the railcar and tank truck are located on the top of the tanks, minimizing spills and leaks There are no valves or connections located on the railcar or tank trailer that would make a damaging leak possible
Operating procedures	Prevent leaks or spills of waste	Approved plant operating procedures that preclude failures assumed in the development of the accident frequency (e.g., train speed controls, facility doors being open during waste shipment delivery) are in place
Catch tank	Collect and contain waste spilled in the facility	The catch tank and its associated pit have a combined holding capacity of approximately 17,030 L (4,500 gal)
HEPA-filtered exhaust system	Mitigate the consequences of accidents resulting in airborne radioactivity	The 204-AR Waste Unloading Facility ventilation system provides two-stage HEPA filtration for unloading canyon effluents. An interlock shuts down the exhaust fan upon high-differential pressure or high radiation
Leak detection instrumentation	Detect leaks during waste transfer operations	Leak detection instrumentation in the catch tank pit and level detection in the catch tank alert operators of off-normal conditions
Continuous air monitors	Detect airborne radioactivity	Continuous air monitors in the unloading canyon alert operators to increased radiation levels from leaks
Emergency response plans and procedures	Mitigate the consequences of leaks or spills	Emergency response plans and procedures are in place to respond to and mitigate the consequences of spills inside and outside the facility

HEPA = high-efficiency particulate air (filter).

5.3.2.7 Subsurface Leak Remaining Subsurface.

Purpose of Analysis: The purpose of this analysis is to evaluate the risks associated with a potential leak of waste to the soil that remains subsurface. A network of interconnected transfer equipment is used to transfer liquid waste in the tank farms. This network comprises encased pipelines (with some single-walled lines still in use); valve pits; pump pits; and direct-buried, double-contained catch tanks. Although most transfer activities involve the double-shell tanks, many transfer operations involve removal of supernatant and interstitial liquids from the single-shell tanks (SSTs).

Analysis Strategy: The hazard analysis performed for the tank farms identified causes that could result in a subsurface leak that remains subsurface. Some of the causes considered included waste leaks from a cracked or broken pump, valve, and related transfer pits, single-walled and encased-line leaks during waste transfers (caused by corrosion, structural fatigue, or other factors) or waste transfers from processing facilities to either double-contained receiver tanks or diversion boxes. Also considered were the structural failures of double-contained receiver tanks, double-shell tanks, or SSTs and associated containments.

Leaks developing during waste transfers through single-walled, direct-buried transfer piping maximize the radiological dose consequences from associated low-energy subsurface leaks. This unmitigated scenario is considered bounding because a leak in the transfer pipe will go directly into the soil (i.e., no encasement) and because the transfer line is direct-buried at 1 m (3.3 ft) (i.e., minimal soil shielding).

5.3.2.7.1 Accident Scenario Assuming No Controls.

Sequence of Events. Assuming no controls, it is postulated that waste is transferred through a single-walled, direct-buried pipe at a maximum flow rate of approximately 379 L/min (100 gal/min) for 24 hours. A leak develops in the transfer pipe and releases 5% of the total volume transferred within 24 hours (i.e., 27,250 L [7,200 gal]). The leak volume of 5% and the assumed maximum flow rate are based on engineering judgment. The leaked waste was assumed to create a subsurface plume and not a surface pool, thereby increasing the likelihood that the condition would remain undetectable to the facility worker. Larger leak volumes resulting from higher flow rates or leak rates may create a surface pool, which is analyzed separately (Section 5.3.2.19).

The subsurface plume is assumed to be 15.24 cm (6 in.) below the soil surface. A soil cover of 15.24 cm (6 in.) was assumed because lesser soil cover would likely be detected. Greater soil cover would provide more shielding from the source and, therefore, reduce the direct, sky shine, and bremsstrahlung radiation dose consequences. No inhalation dose is considered because the surface soil is not wetted (i.e., no resuspension of waste particles).

While it is difficult to predict the shape of the contaminated underground soil plume that would be created as a result of the transfer line leak, it is necessary to fashion the contaminated soil volume into a common geometric shape for dose rate analysis. The following three volumetric shapes

are considered in this analysis as representative of the shape of the contaminated soil volume may occupy: (1) a horizontal cylinder (leaked waste preferentially moves along the transfer line), (2) a vertical cylinder (leaked waste expands in a vertical cylindrical shape), and (3) a sphere (leaked waste moves in all directions from a central point).

The total radiological dose to the onsite receptor from this accident scenario consists of the direct (line-of-sight), skyshine, and associated bremsstrahlung radiation components for a period of 12 hours.

This accident scenario was qualitatively assigned a frequency of "anticipated" (10^{-2} to 10^{0}/year). The frequency was based on the tank farms operational history and the condition of associated transfer lines. The occurrence reporting database has documented previous related pipe failures.

Results Summary. Table 5.3.2.7-1 contains the onsite radiological consequence value for the subsurface leak remaining subsurface. There are no offsite radiological or toxicological exposure consequences to onsite or offsite receptors from this accident scenario. However, a facility worker could be exposed to a radiological hazard. Associated calculations are documented in WHC-SD-WM-CN-004, *Calculation Notes That Support Accident Scenario and Consequence Development for the Subsurface Leak Remaining Subsurface Accident*.

Implications of Results. The onsite radiological dose consequence value shown in Table 5.3.2.7-1 is within the risk guidelines, therefore, no structures, systems, and components have been designated Safety-Class or Safety-Significant for protection of onsite and offsite receptors.

Controls including safety structures, systems, and components have been designated for the protection of the facility worker.

5.3.2.7.2 Accident Scenario Assuming Controls. No accident scenario assuming controls was postulated because the radiological and toxicological consequences for the "no controls" scenario were below the risk guidelines.

5.3.2.7.3 Key Accident Scenario Assumptions.

Important to Accident Frequency. No assumptions regarding facility design or operation and important to accident frequency have been made in the analysis.

Important to Accident Consequences. The following assumptions are important to the calculation of accident consequences:

- The centerline of the single-walled buried transfer pipeline is located 1.0 m (3.3 ft) subsurface.
- The source term used in this scenario is made up of 67 vol% SST liquids and 33 vol% SST solids. This is a reasonably conservative source term because only SST liquids and solids are transferred through single-walled buried transfer pipes. Although the dose rate

would be higher using either double-shell tank or aging waste facility tank wastes, the analysis using SST waste adequately demonstrates the need for controls.

- The density of the soil is assumed to be 1.6 g/cm^3. This value is consistent with calculations and models used in WHC-SD-WM-SARR-016, *Tank Waste Compositions and Atmospheric Dispersion Coefficients for use in Safety Analysis Consequence Assessments*. Higher density soils can be found on the Hanford Site, however, the density assumed here is considered representative and will provide conservative radiological consequence results.

- The soil porosity (void fraction) is assumed to be 0.40. These pores/voids are where the leaked waste resides. A soil with a lower porosity (i.e., 0.30) was also investigated in the analysis of this accident scenario. It was found that developing the consequences with a lower void fraction would not result in conservative dose consequences since the volume of contaminated soil would be larger and therefore provide more self-shielding.

5.3.2.7.4 Controls. The following controls are applicable for operations and activities at all locations that may receive waste transfers, including: waste storage tanks (double-contained receiver tanks, double-shell tanks [including Aging Waste Facility tanks], SSTs, catch tanks, and miscellaneous inactive storage facilities), waste transfer piping (single-walled direct buried or bermed lines, concrete encased lines, and pipe-in-pipe encased lines); and waste transfer-associated structures (process pits, diversion boxes, vault pits, cleanout boxes). See Section 5.3.2 for additional discussion of how the selected controls prevent or mitigate hazardous conditions and accidents caused by waste transfer misrouting.

Safety Structures, Systems, and Components. As a result of extrapolating controls to the other tank farm transfer equipment and locations where this type of accident is credible, the structures in Table 5.3.2.7-2 have been designated as Safety-Significant for protection of the facility worker.

Technical Safety Requirement Controls. A Transfer Control Program is required to mitigate the consequences to the facility worker. Table 5.3.2.7-3 provides details associated with this control.

Defense-in-Depth. Controls that provide Defense-in-Depth are shown in Table 5.3.2.7-4.

5.3.2.7.5 References.

WHC-SD-WM-CN-004, 1996, *Calculation Notes That Support Accident Scenario and Consequence Development for the Subsurface Leak Remaining Subsurface Accident*, Rev. 1, Westinghouse Hanford Company, Richland, Washington.

WHC-SD-WM-SARR-016, 1996, *Tank Waste Compositions and Atmospheric Dispersion Coefficients for use in Safety Analysis Consequence Assessments*, Rev. 2, Westinghouse Hanford Company, Richland, Washington.

Table 5.3.2.7-1. Consequences of a Subsurface Leak Remaining Subsurface.

Consequences	Onsite dose/exposure		Offsite dose/exposure	
	Calculated dose	Risk guideline	Calculated dose	Risk guideline
Radiological	6.4 E-01 mSv (6.4 E-02 rem)	5 mSv (0.5 rem)	N/A	1 mSv (0.1 rem)
Toxicological (SOF)	N/A	1 (ERPG-1)	N/A	1 (PEL-TWA)

ERPG = Emergency Response Planning Guidelines.
N/A = not applicable.
mSv = millisevert.
PEL = permissible exposure limit.
SOF = sum-of-fractions.
TWA = time-weighted average.

Table 5.3.2.7-2. Items Determined to be Safety-Significant by Extrapolating the Subsurface Leak Remaining Subsurface Accident Scenario to Other Applicable Tank Farm Transfer Equipment and Locations.

Structure, system, or component	Safety classification		Safety function	Comments
	SC	SS		
Waste Transfer Concrete pipe encasement		X	Ensures that a leak in the primary waste transfer system piping is directed to a waste transfer-associated structure	Prevents/mitigates significant facility worker hazard
Waste transfer pipe-in-pipe encasement		X	Ensures that a leak in the primary waste transfer system piping is directed to a waste transfer-associated structure	Prevents/mitigates significant facility worker hazard
Transfer leak detection systems		X	Detect leaks (1) in waste transfer piping systems located within transfer-associated structures and (2) in primary pipe of encased waste transfer lines that drain to transfer-associated structures	Prevents/mitigates significant facility worker hazard
Tank level detection systems		X	Provides tank level indication in sending/ receiving tank to aid in detecting leaks	Prevents/mitigates significant facility worker hazard
Salt well flow totalizer		X	Provides indication of the quantity (volume) of waste removed during the salt well process	Prevents/mitigates significant facility worker hazard

SC = Safety-Class.
SS = Safety-Significant.

Table 5.3.2.7-3. Technical Safety Requirement Controls for Subsurface Leaks Remaining Subsurface.

Control	Safety Function	Comments
Transfer control program with the following key elements: 1. Periodic balances during transfers 2. Radiation surveillance: direct-buried line surveillance during waste transfer operations (once per 12 h for salt well pumping, once per 30 min for submersible pumping) 3. Configuration management of transfer routes 4. Independent verification of transfer routings 5. Pipe labeling program: aboveground labeling of direct-buried (single-walled) piping systems 6. Double valve isolation on interconnected lines 7. Monitor interconnected tanks for level increase	Prevents/mitigates significant facility worker hazard	None
Transfer leak detection systems	Detects leak in primary transfer line	None
Transfer pump administrative lock controls	Eliminates motive force for unplanned transfers	None

Table 5.3.2.7-4. Defense-in-Depth Controls that Provide Defense-in-Depth for Potential Subsurface Leak Remaining Subsurface.

Control	Function	Remarks
Pressure/Leak Testing of Transfer Route Before Material Transfer	Provide a greater level of assurance of transfer line integrity before actual transfer of waste	None
Operator Training	Operations of facilities are performed by Hanford Site experienced crews with specific training in these activities	None
Operating Procedures	Operations are performed to approved plant operating procedures	None
Emergency Response Plan/ Procedures	Plans and procedures are in place to respond to emergency conditions	None

5.3.2.8 Unplanned Excavation/Drilling in Crib/Ditch/Pond.

Purpose of Analysis: Liquid radiological and toxicological contaminated wastes produced by Hanford Site facilities and operations have been disposed of in various Tank Waste Remediation System cribs, ditches, or ponds located in the 200 East and 200 West Areas. As a result of past waste disposal practices, these Tank Waste Remediation System facilities contain large quantities of contaminated soils. The contaminated soils in cribs, ditches, and ponds normally do not present a hazard because the contaminated soils are buried under a large overburden of uncontaminated soils. An inadvertent excavation, such as a planned excavation that is performed in the wrong location, or a drilling activity in a crib, ditch, or pond, could expose receptors to radioactive or toxicological hazards.

Analysis Strategy: From an evaluation of the recorded radiological inventories for ditch 216-U-14 and cribs 216-U-16, 216-U-17, and 216-Z-20, crib 216-Z-20 was identified as having the largest concentration of radioactive contamination (WHC-SD-WM-CN-053, *Excavations in Hanford Ponds, Cribs, or Ditches*). Therefore, to assess the potential unmitigated consequences of an inadvertent excavation in a crib, ditch, or pond, an unmitigated accident scenario was developed for crib 216-Z-20. Table 5.3.2.8-1 lists the main dose contributors and associated concentrations of the radiological inventory for crib 216-Z-20. Similarly, Table 5.3.2.8-2 lists the toxicological constituents and concentrations assumed present in the soils of crib 216-Z-20.

5.3.2.8.1 Accident Scenario Assuming No Controls.

Sequence of Events. In the unmitigated accident analysis, the crib was postulated to be excavated with a backhoe at a rate of one bucket of contaminated soil every 2 minutes for a period of 12 hours. This rate would result in approximately 120 m^3 (4,238 ft^3) of soil being excavated. All the excavated material was conservatively assumed to come from the crib; and no credit was taken for the overlying uncontaminated soil that must be excavated to reach the contaminated soils. Because actual excavation operations are not likely to be performed continuously for 12 hours (1 work shift), this assumption is conservative.

The total amount of respirable material released during the unplanned excavation events was calculated by adding the fractions released during the excavation (i.e., falling from the backhoe bucket) and the subsequent resuspension of contaminated soils by the wind during and following the excavation.

As shown in Table 5.3.2.8-2, the concentrations of the toxicological constituents are in the parts per million to parts per billion range. Airborne concentrations of these chemicals resulting from excavation would be at most in the parts per billion range to the onsite receptor. Given this, toxicological exposure consequences to both the onsite and offsite receptor are considered negligible and are not quantified in this analysis.

The operational history of the tank farms was considered when a frequency of "anticipated" (10^{-2} to 10^{0} per year) was qualitatively assigned to the accident scenario assuming no controls. Numerous entries in the occurrence reporting database demonstrate that planned excavation operations have been performed in unintended areas. Some of these events have resulted in unexpected and uncontrolled personnel exposure from transfer lines and other subsurface equipment. Planned excavations both by machine (i.e., backhoe) and by hand have occurred in unintended areas.

Results Summary. Table 5.3.2.8-3 contains a summary of the radiological consequence values for an unplanned excavations or drilling in a crib, ditch, or pond. Toxicological exposure consequences to both the onsite and offsite receptor are considered negligible and are not quantified in this analysis.

The radiological dose consequences presented in Table 5.3.2.8-3 were calculated based on a unit dose per cubic meter of contaminated crib soil. The concentration of the radiological inventory in the contaminated crib soil was assumed representative of the excavated material. The associated calculations are documented in WHC-SD-WM-CN-053.

Implications of Results. The radiological dose consequence values shown in Table 5.3.2.8-3 are within the risk guidelines, therefore, no safety structures, systems, and components or Technical Safety Requirements are required. However, controls that provide Defense-in-Depth are shown in Table 5.3.2.8-4.

5.3.2.8.2 Accident Scenario Assuming Controls. Because the analyzed accident scenario assuming no controls resulted in radiological dose and toxicological exposure consequences that were below the risk guidelines, no accident scenario assuming controls was developed.

5.3.2.8.3 Key Accident Scenario Assumptions.

Important to Accident Frequency. No assumptions related to the facility design or operation have been made in the analysis that are important in relation to the accident frequency.

Important to Accident Consequences. The following assumption is important to the calculation of accident consequences:

- For the isotopes important to dose in the contaminated crib soil, the radiological concentration per cubic meter is bounded by the values shown in Table 5.3.2.8-1.

5.3.2.8.4 Controls.

Safety Structures, Systems, and Components. No safety structures, systems, and components are required.

Technical Safety Requirement Controls. No Technical Safety Requirement controls are required.

Defense-in-Depth. Controls that provide Defense-in-Depth are shown in Table 5.3.2.8-4.

5.3.2.8.5 References.

HSRCM-1, 1995, *Hanford Site Radiological Control Manual*, Rev. 2, U.S. Department of Energy, Richland Operations Office, Richland, Washington.

WHC-CM-8-7, 1995, *Site Support Services, Performing Excavation Activities*, Westinghouse Hanford Company, Richland, Washington.

WHC-SD-WM-CN-053, 1996, *Excavations in Hanford Ponds, Cribs, or Ditches*, Rev. 1, Westinghouse Hanford Company, Richland, Washington.

Table 5.3.2.8-1. Radioactive Isotopes and Inventory Assumed Present in Crib 216-Z-20.

Isotope	Inventory* Bq (Ci)	Concentration Bq(Ci)/m^{3*}
Plutonium-239	3.81 E+10 (1.03 E+00)	1.6 E+07 (4.3 E-04)
Plutonium-240	3.81 E+10 (1.03 E+00)	1.6 E+07 (4.3 E-04)
Plutonium-241	8.03 E+10 (2.17 E+00)	3.3 E+07 (9.0 E-04)
Americium-241	3.85 E+10 (1.04 E+00)	1.6 E+07 (4.3 E-04)

*Based on a contaminated soil volume of 2,400 m^3 (84,755 ft^3) in crib 216-Z-20.
Bq = becquerel.
Ci = curie.

Table 5.3.2.8-2. The Toxicological Constituents and Concentrations Assumed Present in Crib 216-Z-20.

Analyte	Average concentration (parts per billion)	Maximum concentration (parts per billion)
Mercury	1.28	20
Lead	28	319
Chromium	54	380
Cyanide	51	246
Hydrazine	59	88
Carbon tetrachloride	4,352	8,700
Cyclohexane	670	900
Tetrachlorethane	410	1,200
Phenol	37	80

Table 5.3.2.8-3. Consequences of Unplanned Excavations or Drilling in Cribs, Ditches, and Ponds.

Consequences	Onsite dose/exposure		Offsite dose/exposure	
	Calculated dose	Risk guideline	Calculated dose	Risk guideline
Radiological	1.1 mSv (1.1 E-01 rem)	5 mSv (0.5 rem)	1.1 E-03 mSv (1.1 E-04 rem)	1 mSv (0.1 rem)
Toxicological (SOF)	Negligible	1 (ERPG-1)	Negligible	1 (PEL-TWA)

ERPG = Emergency Response Planning Guideline.
mSv = millisievert.
PEL = permissible exposure limit.
SOF = sum-of-fractions.
TWA = time-weighted average.

Table 5.3.2.8-4. Controls That Provide Defense-in-Depth For Potential Unplanned Excavations or Drilling in Cribs, Ditches, and Ponds.

Control	Function	Remarks
Excavation Controls detailed in WHC-CM-8-7, Site Support Services Performing Excavation Activities	To ensure that excavation activities are performed in the right location with the correct equipment and properly trained personnel	While the control cited may not prevent the accident analyzed from occurring, it would create a higher level of confidence in excavation activities occurring in the correct location
Radiological Protection Program	To ensure Radiological Work Permit application of radiological survey requirements of HSRCM-1, Hanford Radiological Control Manual, for entry to, working in, and concluding work at known or suspected contaminated areas	The control cited may not be effective in preventing the analyzed accident from occurring

WHC-CM-8-7,* 1995, Site Support Services, Performing Excavation Activities, Westinghouse Hanford Company, Richland, Washington.

HSRCM-1, 1995, Hanford Site Radiological Control Manual, Rev. 2, U.S. Department of Energy, Richland Operations Office, Richland, Washington.

*Refer to Appendix F, "Sitewide Controlled Manual Cross-Reference Table," of the BIO for cross-walk between sitewide controlled manuals (e.g., WHC-CM-X-XX) superseded by Fluor Daniel Hanford, Inc., procedures (e.g., HNF-PRO-X-XXX).

This page intentionally left blank.

5.3.2.9 Caustic Spray Leak.

Purpose of Analysis: Sodium hydroxide is used to adjust the concentration of hydroxide (OH^-) ions in the waste tank contents to minimize corrosion. A pressurized spray leak of caustic solution during a transfer to a waste tank could disperse a significant amount of respirable sodium hydroxide particles. These particles could cause potentially significant onsite consequences. Therefore, this analysis will (1) estimate the maximum NaOH air concentrations at the onsite and Site boundary receptor locations and (2) assess the resultant safety implications.

Analysis Strategy: This analysis bounds the consequences associated with the bulk storage of cold chemicals at the tank farm facilities. Bounding is accomplished by estimating the maximum consequences to onsite 100 m (328 ft) and Site boundary receptors from inhalation of NaOH as a corrosive/irritant aerosol. No radioactive materials are associated with this event.

5.3.2.9.1 Accident Scenario Assuming No Controls.

Sequence of Events. Sodium hydroxide is either (1) procured from an offsite vendor and transported in 15,140-L (4,000-gal) tanker trucks to the tank farms or (2) mixed on Site. The caustic solution may be as strong as 19 M (50 wt%). The solution may be transferred into a given tank by a mixer pump or directly through an available riser.

The initiating event is assumed to be a crack in a circumferential weld at a flange or fitting in the transfer piping. The crack width is assumed to produce the maximum respirable release rate with a maximum length equal to one pipe diameter (inside). The release continues until an operator stops the transfer and depressurizes the system.

The lightest piping suitable for transferring NaOH solution is 1-in. Schedule 10 commercial steel pipe with a wall thickness of 2.77 mm (0.109 in.). The largest pipe or hose considered is 51-mm (2-in.) cross-linked polyethylene hose with a wall thickness of 10 mm (25/64 in.). The maximum pressure the system can be subjected to is 862 kPa (125 psig). The highest temperature at which the tank truck is loaded is 49 °C (120 °F). It is assumed that the concentration of the solution could range from 5 to 50% NaOH. The postulated maximum release rate corresponds to a crack with a minimum depth equal to the lightest (Schedule 10) pipe wall thickness of 2.77 mm (0.109 in.) and a maximum length equal to one pipe diameter, i.e., 25 mm (1 in.). The width of the crack was optimized to produce the highest respirable particle fraction using the SPRAY Code (WHC-SD-GN-SWD-20007, *A Model for Predicting Respirable Releases from Pressurized Leaks*).

Particles less than about 10 μm tend to remain suspended in the air for long distances, whereas particles larger than 10 μm released from a non-elevated source tend to fall out within the first 50 to 100 m (164 to 328 ft) of travel. The size of the liquid particles will decrease in transit by evaporation of the liquid component. Ultimately, only a smaller particle of the solid material previously in liquid solution will remain. Therefore, the small particle fraction of the spray release, a function of solution

concentration and crack width, was determined by using the initial diameter of a solution particle (with the given solid fraction) that will shrink to 10 μm by evaporation. The leak rate and atomization efficiency increases with decreasing viscosity, and hence with increasing temperature. Therefore, the high end of the temperature range for this liquid (50 °C [122 °F]) was assumed.

A parametric study was performed using the SPRAY Code to determine the worst-case solution concentration within the expected range of 5 to 50% NaOH. The worst-case small particle release rate was calculated over a range of NaOH concentrations. These calculations accounted for variation in viscosity and density with concentration. Results of the calculations indicated that a 12% solution was optimal regarding small particle generation. For this case, the unevaporated particle size range was less than or equal to 20.3 μm and the respirable NaOH release rate was 1.68 g/s. Standard roughness and flow parameters for steel pipe were assumed. For the cases where critical flow developed in the crack, friction factors for laminar flow were assumed for conservatism.

The caustic spray leak scenario has been assigned a frequency of occurrence in the "anticipated" range (10^{-2} to 10^{0}/yr). This frequency category was assigned because only a single failure (e.g., crack in pipe, weld failure, loose piping connection) is required for the event to occur. The associated risk guidelines for onsite and Site boundary receptors are Emergency Response Planning Guideline (ERPG)-1 and permissible exposure limit-time-weighted average, respectively. Both criteria are 2 mg/m^3 for NaOH (WHC-SD-WM-SARR-011, *Toxic Chemical Considerations for Tank Farm Releases*).

Results Summary. The onsite and Site boundary air concentrations of small particle NaOH are shown in Table 5.3.2.9-1. The associated calculations are contained in WHC-SD-WM-CN-065, *Consequence Analysis of a NaOH Solution Spray Release During Addition to Waste Tank*.

Implications of Results. The sum-of-fractions at the Site boundary is far less than the toxicological risk criterion of 1. The criterion is exceeded at the onsite receptor location. Technical Safety Requirement controls are required to protect the onsite receptor.

5.3.2.9.2 Accident Scenario Assuming Controls. Since the liquid being transferred is relatively cool (< 50 °C) and is at relatively low pressure ($\leq$ 125 psig), standard 4 mil polyethylene (or similar material) sleeving or wrap was determined to have ample strength to contain the spray. The sleeving/wrap would not be expected to be pressure tight, however, and the solution would still leak out, producing a minor local cleanup problem, but there would be no significant aerosol release. The aerosol release rate for the mitigated spray was estimated by calculating how much mist generated inside the plastic sleeving could be displaced out of the sleeving by the solution leaking out of the pipe. The maximum total solution leak rate, which occurs at a solution concentration of 50%, and a maximum transient air loading of 1 g/m^3, would force 7.18 x 10^{-5} g/s of solution or 3.59 x 10^{-2} mg/s of NaOH, out of the sleeving in the form of a respirable aerosol. The resulting

receptor concentrations were found to be 1.22 x 10^{-3} mg/m^3 and 1.02 x 10^{-6} mg/m^3 for the onsite and Site boundary receptors, respectively. Both concentrations are negligible compared to the risk guidelines of 2 mg/m^3 for both receptors. Refer to WHC-SD-WM-CN-065 for calculations.

5.3.2.9.3 Key Accident Scenario Assumptions.

Important to Accident Frequency. No key assumptions are associated with the accident frequency.

Important to Accident Consequence. The following assumptions are important to the accident consequences.

- These results are for standard Schedule 10 steel pipe. Use of a thinner wall pipe such as Schedule 5 (wall thickness 1.65 mm, or 0.065 in.) would increase the maximum receptor concentrations and sum-of-fractions by about 30% because of the smaller crack depth and decreased friction losses.
- System pressure was assumed to be limited to 862 kPa (125 psi).

5.3.2.9.4 Controls.

Safety Structures, Systems, and Components. No safety structures, systems, and components are required.

Technical Safety Requirement Controls. The Technical Safety Requirement controls selected for caustic spray leaks are listed in Table 5.3.2.9-2. For each control, the safety function is described and additional comments are provided as appropriate.

Defense-in-Depth. Defense-in-Depth controls for the caustic spray leak accident analysis are provided in Table 5.3.2.9-3.

5.3.2.9.5 References.

WHC-SD-GN-SWD-20007, 1994, *A Model for Predicting Respirable Releases from Pressurized Leaks*, Rev. 0, Westinghouse Hanford Company, Richland, Washington.

WHC-SD-WM-SARR-011, 1996, *Toxic Chemical Considerations for Tank Farm Releases*, Rev. 2, Westinghouse Hanford Company, Richland, Washington.

WHC-SD-WM-CN-065, 1996, *Consequence Analysis of a NaOH Solution Spray Release During Addition to Waste Tank*, Rev. 1, Westinghouse Hanford Company, Richland, Washington.

Table 5.3.2.9-1. Consequences of a Caustic Spray Leak Assuming No Controls.

Receptor/hazard	Calculated dose/exposure	Risk guidelines
		Anticipated
Offsite/radiological (mSv)	N/A	1 mSv
Onsite/radiological (mSv)	N/A	5 mSv
Offsite/toxicological (SOF)	2.4 E-02	1 (ERPG-1)
Onsite/toxicological (SOF)	2.9 E+01	1 (ERPG-1)

ERPG = Emergency Response Planning Guideline.
mSv = millisievert.
N/A = not applicable.
SOF = sum-of-fractions.

Table 5.3.2.9-2. Technical Safety Requirement Controls for Caustic Spray Leaks.

Control	Safety function	Comments
Caustic Transfer Controls		Nonnuclear TSR control (toxicological only consequences)
1. Polyethylene (or similar) sleeving around delivery piping	1. Mitigate the consequences of a spray leak	
2. Pipeline transfer pressures shall be $\leq$ 125 psig	2. Reduce the consequences of a leak by reducing the leak rate	
3. Steel pipe shall be Schedule 10 or heavier wall thickness; polyethylene hose or other delivery piping shall be designed for appropriate pressure delivery. Caustic transfer piping shall have a wall thickness of $\geq$ 0.109 in.	3. Reduce the consequences of a leak by reducing the leak rate	

Table 5.3.2.9-3. Defense-in-Depth Controls for Caustic Spray Leaks.

Control	Function	Remarks
Operator training	To prevent or minimize the effects of a leak	The operating procedures contain a number of checks to ensure that piping connections are secure and equipment functioning properly. Regular instrument checks during transfers minimize consequences of a leak
Leak detection instrumentation	To detect leaks during the waste transfer operation	Leak detection instrumentation in the caustic injection skid alerts operators of off-normal conditions
TWRS Hazardous Material Protection Program	To prevent or minimize consequences to a worker from a hazardous material release	The TWRS HMP program is a collection of industrial hygiene programs designed to protect workers against the type and magnitude of hazards identified in Chapter 5.0. See Chapter 4.0 for a discussion of the HMP program
Emergency response plans and procedures	To mitigate the consequences of leaks or spills	Emergency response plans and procedures are in place to respond to and mitigate the consequences of accidental leaks or spills of hazardous material. See Chapter 4.0 for a discussion of the emergency preparedness program

WHC-SD-WM-CN-065, 1996, Consequence Analysis of a NaOH Solution Spray Release During Addition to Waste Tank, Rev. 1, Westinghouse Hanford Company, Richland, Washington.
HMP = Hazardous Material Protection.
TWRS = Tank Waste Remediation System.

This page intentionally left blank.

5.3.2.10 Sodium Fire.

Purpose of Analysis: The 2727-W Sodium Storage Facility is a pre-engineered steel building that contains five horizontally mounted stainless steel tanks that are filled with solid sodium. Two of the tanks are full, one is half full, and the remaining two contain only residual heels (Teynor 1995, *Request for Relief of Department of Transportation (DOT) Regulations for Shipment of the HALLAM Sodium Tanks*). WHC-SD-WM-TI-759, *Hazard Evaluations for the TWRS Final Safety Analysis Report*, documents findings of the hazard analysis for the 2727-W facility. The 2727-W facility hazard analysis identified several possible scenarios for release of NaOH. Based on the current facility design, it was found that the only credible scenario was a high wind initiated building collapse leading to failure of one tank and subsequent sodium fire. The purpose of this analysis is to estimate the maximum NaOH release rate and resulting toxicological consequences which could be produced by such a scenario. The sodium is also slightly contaminated with ^{22}Na. A determination is therefore also required as to whether release of the ^{22}Na contamination could produce significant consequences.

Analysis Strategy: The analysis is designed to produce a bounding estimate for all of the release scenarios discussed in the facility hazard analysis. The radiological source term evaluation is nonmechanistic in that it assumes the release of the entire facility inventory of ^{22}Na in order to conclusively show that the amount of ^{22}Na present in the sodium is below the level of concern.

5.3.2.10.1 Accident Scenario Assuming No Controls.

Sequence of Events. The initiating event is assumed to be a high wind that causes major damage to the 2727-W building. The building is rated for a 958 Pa (20 lb/ft^2) wind load (WHC-SD-WM-TI-759), which translates to a 113 km/h (70 mph) fastest mile wind speed (ANSI A58.1, *American National Standard - Minimum Design Loads for Buildings and Other Structures*). The 113 km/h (70 mph) fastest mile wind speed has a frequency of exceedance of approximately 2 x 10^{-3}/yr in the 200 East and 200 West Areas (UCRL-53526, *National Phenomena Hazards Modelling Project: Extreme Wind/Tornado Models for Department of Energy Sites*).

Falling building material is assumed to break off a large pipe connection into a tank in such a way that the resultant tank opening faces skyward. After tank damage, the wind is assumed to decrease to a low speed and heavy rain is assumed to begin. The building roof is assumed to have failed in such a way that rain is channeled into the tank opening.

The rain that channels into the open tank (from which the nitrogen cover gas has escaped) causes a vigorous sodium-water reaction that generates large amounts of hydrogen and heat. The hydrogen is assumed to ignite and cause an explosion that further damages and opens the upper half of the tank. The explosion results in a sodium fire that covers the entire upper surface of the sodium in the tank. This scenario is assumed to occur in the half-full tank in order to maximize the exposed sodium area in the tank. Not enough energy is expected to be available to damage the other tanks.

The rain is then assumed to stop and the wind speed to remain low in order to minimize washout of releases and maximize downwind exposures to the sodium combustion product release which is assumed to be converted entirely to NaOH in the moist air.

Given the major building damage from the high wind, the remainder of the scenario leading to the limiting sodium fire is very conservatively estimated to have a probability of 1%. This implies an overall frequency of approximately 2.0×10^{-5}/yr, making this postulated accident well within the "extremely unlikely" category guidelines (Table 5.3.2.10-1).

Results Summary. The postulated maximum release rate for the sodium fire scenario is calculated for a pool fire with a size equal to the maximum internal tank dimensions (i.e., 3.7 m [12 ft] diameter by 6.1 m [20 ft] effective length, or 22.3 m^2 [240 ft^2]). The resulting maximum NaOH release rate is 147 g/s, which causes a very high particulate concentration. (WHC-SD-WM-CN-045, *Consequence Analysis of a Postulated NaOH Release from the 2727-W Sodium Storage Facility.*)

The largest particulate concentration that can typically be supported in the air at a point away from the source is approximately 100 mg/m^3. Data from actual open sodium fires of approximately the same size as the one postulated in the Tank Waste Remediation System analysis indicates that, because of rapid agglomeration and fallout of the combustion particles in the first 50 to 100 m (164 to 328 ft), the air concentration at 100 m (328 ft) downwind is actually much lower than 100 mg/m^3 (less than about 20 mg/m^3 [WHC-SD-WM-CN-045]). Because the effects of short-range fallout cannot be quantified, 100 mg/m^3 is typically conservatively assumed at a distance of at least 100 m (328 ft) downwind of a heavy particulate source (ANSI N46.1, *American National Standard - Guidance for Defining Safety-Related Features of Nuclear Fuel Cycle Facilities*). The concentration at the Site boundary is 0.083 mg/m^3.

For an accident categorized as "extremely unlikely," the onsite receptor toxic limit is ERPG-3. Sodium hydroxide, classified as a corrosive/irritant, has an ERPG-3 onsite toxic limit of 100 mg/m^3 (WHC-SD-WM-SARR-011, *Toxic Chemical Considerations for Tank Farm Releases*). Likewise, for an "extremely unlikely" accident the site boundary receptor toxic limit is ERPG-2 which is 40 mg/m^3 for NaOH.

The total, current 2727-W facility ^{22}Na inventory is estimated to be approximately 0.005 Ci (1.85×10^8 Bq) (WHC-SD-WM-TI-759). The release of the entire facility inventory of ^{22}Na would produce an inhalation dose of 4.3×10^{-3} mSv (4.3×10^{-4} rem) to the onsite receptor at 100 m (328 ft) and 3.6×10^{-6} mSv (3.6×10^{-7} rem) to the Site boundary receptor at 10.9 km (6.8 mi) on the near bank of the Columbia River. Both doses are negligible.

Implications of Results. No onsite or Site boundary risk guidelines are exceeded. However, a control is necessary to protect building design features credited in the analyses.

5.3.2.10.2 Accident Scenario Assuming Controls. Because the sodium fire scenario assuming no controls resulted in toxicological exposure consequences that were below the risk guidelines, no accident scenarios assuming controls were developed.

5.3.2.10.3 Key Accident Scenario Assumptions.

Important to Accident Frequency. The building is assumed to fail because of the effects (including gusts) of a 113 km/h (70 mph) fastest mile wind with a frequency of 2.0×10^{-3}/yr.

Important to Accident Consequence. The trace heaters installed on the sodium storage tanks are not operational.

5.3.2.10.4 Controls. The following controls are applicable to the 2727-W Sodium Storage Facility.

Safety Structures, Systems, and Components. The facility structure has been designated as a Safety-Significant structure, system, and component (Table 5.3.2.10-2). This control ensures that the building will not fail unless the fastest mile wind speed reaches 113 km/h (70 mph).

Technical Safety Requirement Controls. No safety structures, systems, and components are required for this accident scenario. The facility structure is a nonnuclear TSR design feature (toxicological only consequences).

Defense-in-Depth. The Defense-in-Depth controls required for the sodium fire scenario are listed in Table 5.3.2.10-3.

5.3.2.10.5 References

ANSI A58.1, 1982, *American National Standard - Minimum Design Loads for Buildings and Other Structures*, American Nuclear Society, La Grange Park, Illinois.

ANSI N46.1, 1980, *American National Standard - Guidance for Defining Safety-Related Features of Nuclear Fuel Cycle Facilities*, American Nuclear Society, La Grange Park, Illinois.

Teynor, T. K., 1995, *Request for Relief of Department of Transportation (DOT) Regulations for Shipment of the HALLAM Sodium Tanks* (external letter 95SWT448 to President of Westinghouse Hanford Company, Waste Programs Division, July 26), U.S. Department of Energy, Richland Operations Office, Richland, Washington.

UCRL-53526, 1985, *National Phenomena Hazards Modelling Project: Extreme Wind/Tornado Models for Department of Energy Sites*, University of California Research Laboratory, Berkeley, California.

WHC-SD-WM-CN-045, 1996, *Consequence Analysis of a Postulated NaOH Release from the 2727-W Sodium Storage Facility*, Rev. 1, Westinghouse Hanford Company, Richland, Washington.

WHC-SD-WM-SARR-011, 1996, *Toxic Chemical Considerations for Tank Farm Releases*, Rev. 2, Westinghouse Hanford Company, Richland, Washington.

WHC-SD-WM-TI-759, 1996, *Hazard Evaluations for the TWRS Final Safety Analysis Report*, Rev. 0, Westinghouse Hanford Company, Richland, Washington.

Table 5.3.2.10-1. Summary of Consequences and Frequencies for a Sodium Fire without Controls.

Accident	Consequences								Frequency
	Radiological				Toxicological (SOF)				Without controls
	Calculated dose		Risk guideline		Calculated dose		Risk guideline		
	Onsite	Offsite	Onsite	Offsite	Onsite	Offsite	Onsite	Offsite	
Sodium fire	4.3 E-03 mSv (4.3 E-04 rem)	3.6 E-06 mSv (3.6 E0-7 rem)	100 mSv (10 rem)	40 mSv (4 rem)	1.0 E+00	2.1 E-03	1 (ERPG-3)	1 (ERPG-2)	Extremely unlikely

ERPG = Emergency Response Planning Guidelines.
mSv = millisievert.
SOF = sum-of-fractions.

Table 5.3.2.10-2. Safety Structures, Systems, and Components for Sodium Fire.

Control	Safety classification		Safety function	Comments
	SC	SS		
Building structure		X	(a) Building designed to withstand high winds (b) Height of foundation above grade eliminates vehicle collisions as credible accident initiator	Nonnuclear TSR design feature (toxicological only consequences) (a) Designed to wind loading of 20 lb/ft^2 (b) Foundation wall is 0.9 m (3 ft) abovegrade

SC = Safety-Class.
SS = Safety-Significant.

Table 5.3.2.10-3. Defense-in-Depth Controls for Sodium Fire.

Control	Function	Remarks
Grounding of building and tanks	To prevent damage from lightning	The metal building is grounded by interconnected 2.4 m (8 ft) grounding rods in six locations (grounding grid). Each sodium tank is grounded to the building grounding grid
Fire detectors	Fire detection	Two fire detectors are connected to a weatherproof external master fire alarm cabinet
No water service to building	To prevent exposure of tanks to leaks	There is no water or steam service to the building
Fire extinguishers and external postings	Fire fighting	Two dolly-mounted fire extinguishers suitable for metal fires are located in external shelters on the north and south ends of the building. Signs posted outside the building clearly direct that no water is to be used to fight fires
Nitrogen cover gas system	To preclude oxidation of the sodium	The headspace of each tank is supplied with pressurized (14 to 69 kPa [2 to 10 psig]) nitrogen gas to prevent any air-sodium reaction. A gas pressure monitoring system is connected to each tank through an weatherproof externally mounted control panel
Annual inspection of building structure	To ensure building structural integrity and foundation height	(a) Designed to wind loading of 20 lb/ft^2 (b) Foundation wall is 0.9 m (3 ft) abovegrade

This page intentionally left blank.

5.3.2.11 Mixing of Incompatible Material - Toxic Vapor Generation.

Purpose of Analysis: The hazard analysis performed for mixing of incompatible material resulting in generation of a toxic vapor identified a rapid, uncontrolled addition of incompatible material that could lead to a release of toxic vapors. The accident scenario assumes a rapid uncontrolled addition of a caustic (sodium hydroxide) to liquid waste of low pH, resulting in the release of ammonia as the result of the solution becoming more basic.

Analysis Strategy: This analysis examines the addition of caustic to a double-contained receiver tank (DCRT). Such an analysis is appropriate for the following reasons.

1. Liquids pumped from the SST system tend to have low pH solutions and require addition of caustic. This addition occurs in a DCRT.

2. Additions of the same amount of caustic will have a greater impact on the concentration in the DCRT than in an SST or a DST because the DCRT has a much smaller volume.

5.3.2.11.1 Accident Scenario Assuming No Controls.

Sequence of Events. For corrosion control purposes, DCRT contents must remain above the hydroxide concentration of 0.01 M. If the hydroxide concentration falls below 0.01 M, caustic may be added to bring the concentration within the corrosion controls.

Consistent with current operational practices, it is assumed that DST wastes are not transferred to DCRTs.

The solubility of ammonia which is contained in the waste is sensitive to the pH level. For this analysis, the maximum concentration of ammonia in liquid waste is 0.51 g/L (WHC-SD-WM-SARR-011, *Toxic Chemical Considerations for Tank Farm Releases*). An increase in pH will lead to a reduction in ammonia solubility and release from the waste. This scenario assumes an addition of NaOH to a DCRT containing low pH waste which leads to a change in the ammonia solubility and its release to the environment. This scenario applies to DCRTs, DSTs, and SSTs.

This accident has been qualitatively assigned a frequency of anticipated as caustic additions to DCRTs is a planned operation.

Results Summary. There are no onsite or offsite radiological consequences. The estimated peak ammonia concentration is 1.6 mg/m^3 onsite, and 0.0013 mg/m^3 offsite. The supporting calculations are documented in WHC-SD-WM-CN-074, *Chemical Reaction in a DCRT Leading to a Toxic Release*.

Implications of Results. The onsite and offsite ammonia concentrations are below the risk guidelines for an anticipated event (i.e., an ERPG-1/PEL-TWA of 17 mg/m^3 [WHC-SD-WM-SARR-011]). Accordingly, no safety structures, systems, and components or Technical Safety Requirement controls are required.

5.3.2.11.2 Accident Scenario Assuming Controls. Because the consequences of the accident scenario assuming no controls are well below the risk guidelines, no additional analysis is required.

5.3.2.11.3 Key Accident Scenario Assumptions. Key assumptions related to the derivation of the accident frequency and calculation of the accident consequences as documented in WHC-SD-WM-CN-074 are as follows.

Important to Accident Frequency. No assumptions have been made in the analysis that are important in relation to the accident frequency.

Important to Accident Consequences. The maximum concentration of ammonia in liquid is 0.51 g/L. Note that the concentration could be as high as 5.3 g/L before the risk guidelines are exceeded.

5.3.2.11.4 Controls.

Representative Accident Scenario

- **Safety Structures, Systems, and Components**—There are no safety structures, systems, and components for this accident.
- **Technical Safety Requirement Controls**—There are no Technical Safety Requirement controls.
- **Defense-in-Depth**—Table 5.3.2.11-1 shows the Defense-in-Depth control for this accident.

5.3.2.11.5 References.

WHC-SD-WM-CN-074, 1996, *Chemical Reaction in a DCRT Leading to a Toxic Release*, Rev. 1, Westinghouse Hanford Company, Richland, Washington.

WHC-SD-WM-SARR-011, 1996, *Toxic Chemical Considerations for Tank Farm Releases*, Rev. 2, Westinghouse Hanford Company, Richland, Washington.

Table 5.3.2.11-1. Defense-in-Depth Controls for Chemical Reaction in Double-Contained Receiver Tank.

Control	Function
Industrial Hygiene Program	Ensures personnel safety during chemical additions to the waste tanks

This page intentionally left blank.

5.3.2.12 Mixing of Incompatible Material - Tank Pressurization.

Purpose of Analysis: A mistransfer of incompatible waste to a double-contained receiver tank (DCRT) was identified in the Tank Waste Remediation System facilities hazard analysis as an initiating event for a hazardous material release. This scenario is applicable to DCRTs 244-A, 244-S, and 244-TX. In the analysis, the mistransfer leads to a chemical reaction and subsequent release of radioactive and toxic aerosols to the environment.

Analysis Strategy: The addition of large quantities of acid or acidic waste to a basic waste tank solution has been identified as the bounding case for mixing of incompatible waste. A 416 L (110-gal) transfer of 57 wt% nitric acid would bound the transfer from any single source.

5.3.2.12.1 Accident Scenario Assuming No Controls.

Sequence of Events. The initiating event for the mixing of incompatible material and subsequent tank pressurization scenario assuming that no controls are in place is a postulated mistransfer of 416 L (110 gal) of 57 wt% nitric acid into a DCRT. The receiving DCRT is assumed to contain waste that is sufficiently basic to completely neutralize the incoming acid. This ensures that the maximum heat of reaction per mole of incoming acid is generated and maximizes the heating of waste. Heating of the waste causes vaporization and, consequently, a pressurized buildup of aerosols in the tank headspace. No credit is taken for high-efficiency particulate air (HEPA) filtration such that the aerosols are released directly to the atmosphere.

This accident has been qualitatively assigned a frequency of "anticipated" based on the operational history of mistransfers in Tank Waste Remediation System facilities.

Results Summary. The onsite and offsite radiological and toxicological consequences of incompatible waste tank pressurization with no controls are listed in Table 5.3.2.12-1. The associated calculations for those consequences are documented in WHC-SD-WM-CN-073, *Chemical Reaction in a DCRT*.

Implications of Results. The offsite radiological and toxicological consequences are below the risk guidelines, but the onsite consequences are above the guidelines. Controls are therefore required.

5.3.2.12.2 Accident Scenario Assuming Controls.

Sequence of Events. The control selected to mitigate the consequences of a mistransfer is the presence of HEPA filters on the DCRT ventilation system. The sequence of events leading to the accident is the same as in Section 5.3.2.12.1, "Accident Scenario Assuming No Controls." The release to the environment is reduced by the HEPA filters, with assumed 99.95% efficiency.

Results Summary. The onsite and offsite radiological and toxicological consequences for the scenario assuming controls are presented in Table 5.3.2.12-2. The supporting calculations are documented in WHC-SD-WM-CN-073.

Implications of Results. The onsite consequences of the incompatible waste and resulting tank pressurization with HEPA filters assumed in place are below the risk guidelines.

5.3.2.12.3 Key Accident Scenario Assumptions. Key assumptions related to the derivation of the accident frequency and calculation of the accident consequences are presented below.

Important to Accident Frequency. No assumptions have been made in the analysis that are important in relation to the accident frequency.

Important to Accident Consequences. The following assumptions are important to the determination of accident consequences.

- Acidic waste is 57 wt% nitric acid (12 M).
- Maximum potential acid waste transfer is 416 L (110 gal).
- DCRT waste temperature is 93 °C (200 °F).
- HEPA filters are 99.95% efficient.
- DCRT waste volume is assumed to be two-thirds double-shell tank liquid and one-third double-shell tank solids and this mixture is assumed to bound transfers of both double-shell and single-shell tank wastes.
- The hydroxide content is taken to be at the maximum allowed under DCRT corrosion control limits (10 M OH^-).

5.3.2.12.4 Controls.

Safety Structures, Systems, and Components. HEPA filters are Safety-Significant structures, systems, and components for this incompatible waste accident (Table 5.3.2.12-4).

Technical Safety Requirement Controls. As shown in Table 5.3.2.12-3, there are Technical Safety Requirement controls on the DCRT HEPA filters.

Defense-in-Depth. The Defense-in-Depth controls required for the mixing of incompatible waste-tank pressurization scenario are listed in Table 5.3.2.12-5.

5.3.2.12.5 References.

WHC-SD-WM-CN-073, 1996, *Chemical Reaction in a DCRT*, Rev. 0, Westinghouse Hanford Company, Richland, Washington.

Table 5.3.2.12-1. Summary of Consequences and Frequencies for Mixing of Incompatible Waste–Tank Pressurization without Controls.

Accident	Consequences								Frequency
	Radiological (Sv)				Toxicological				
	Calculated dose		Risk guideline		Calculated dose		Risk guideline		
	Onsite	Offsite	Onsite	Offsite	Onsite	Offsite	Onsite	Offsite	
416 L (110 gal) 57 wt% nitric acid mistransfer	0.27 (27 rem)	1.8 E-04 (1.8 E-02 rem)	5.0 E-03 (0.5 rem)	1.0 E-03 (0.1 rem)	4.0	1.8 E-02	1 (ERPG-1)	1 (PEL-TWA)	Anticipated

ERPG = Emergency Response Planning Guideline.
PEL = permissible exposure limit.
Sv = sievert.
TWA = time-weighted average.

Table 5.3.2.12-2. Summary of Consequences and Frequencies for Mixing of Incompatible Waste–Tank Pressurization with Controls.

Accident	Consequences								Frequency
	Radiological (Sv)				Toxicological				
	Calculated dose		Risk guideline		Calculated dose		Risk guideline		
	Onsite	Offsite	Onsite	Offsite	Onsite	Offsite	Onsite	Offsite	
416 L (110 gal) 57 wt% nitric acid mistransfer	1.3 E-04 (1.3 E-02 rem)	9.0 E-08 (9.0 E-06 rem)	5.0 E-03 (0.5 rem)	1.0 E-03 (0.1 rem)	0.82	6.9 E-04	1 (ERPG-1)	1 (PEL-TWA)	Anticipated

ERPG = Emergency Response Planning Guideline.
PEL = permissible exposure limit.
Sv = sievert.
TWA = time-weighted average.

Table 5.3.2.12-3. Technical Safety Requirement Controls for Mixing of Incompatible Materials—Tank Pressurization.

Control	Safety function	Comments
Transfer controls • Compatibility evaluation to ensure chemical additions are pH ≥ 8 before transfer into tank farm (excluding water and caustic additions transfers)	Prevent heat generation due to acid/base reactions	Control for pH ≥ 8 was selected to meet criticality requirements.
HEPA Filter Control Program • Aerosol test upon installation • Periodic aerosol test	Ensures filtering efficiency of HEPA filter	None

HEPA = high-efficiency particulate air (filter).

Table 5.3.2.12-4. Safety Structures, Systems, and Components for Mixing of Incompatible Materials—Tank Pressurization.

Structures, systems, or components	Safety classification	Safety function	Comments
One stage of HEPA filtration	Safety-Significant	Provide filtration of DCRT headspace gases prior to release	None

DCRT = double-contained receiver tank.
HEPA = high-efficiency particulate air (filter).

Table 5.3.2.12-5. Defense-in-Depth Controls for Mixing of Incompatible Waste—Tank Pressurization.

Control	Function
Tank Farm Waste Compatibility Program	Ensures that waste transfers are compatible with regard to criticality, flammable gas generation, heating, organics, and other safety and operational concerns
Waste transfer procedural controls	Ensures correct routing lineup
Neutralization of all acid waste transfers prior to shipment to DCRT	Ensures that no acidic waste is transferred to DCRT. Corrosion control and energetic reaction prevention

DCRT = double-contained receiver tank.

5.3.2.13 Tank Failure Due to Excessive Loads.

Purpose of Analysis: Postulated tank failure accidents are addressed in this section. Tank failure accidents include dome failure; dome settling (wall failure); and dome, wall, or bottom perforation. Double-shell tanks (DSTs), single-shell tanks (SSTs), double-contained receiver tanks (DCRTs), catch tanks, 200 Series tanks, and miscellaneous interim storage facilities are covered in this section. Tank failure is a safety concern because of the release of radioactive waste to the environment through openings in the walls, bottom, or dome of a tank.

Analysis Strategy: The following accidents were identified in the hazard analysis as those that could lead to structural failure.

- Excessive pressurization of tank dome and walls caused by flammable gas explosion, organic fires, and exothermic reactions
- Seismic forces
- Load drop or structure toppling onto soil above the tank, onto a riser, or into a pump pit
- Excessive external uniform load (e.g., excess soil cover) or concentrated load (e.g., large vehicle on the tank) over the dome
- Aging of the tank structure due to thermal cycling, corrosion, and level cycling
- Excessive vacuum caused by (1) failures in the ventilation system with continued exhaust operation, (2) cooldown after certain accidents (e.g., fire), or (3) cooling of the atmosphere or waste due to the addition of water
- Excessive internal forces due to the storage of waste such as those due to waste level, waste density, or waste temperature
- Water or waste addition to the annulus of a DST that results in uplift of the primary tank
- High concrete temperatures due to loss of cooling as a result of ventilation failure, heat load in excess of design conditions, or thermal characteristics that result in "hot spots"
- Accelerated wall or rebar corrosion or degradation as the result of corrosive chemicals added to the tank.

The postulated tank failure mechanisms that produce the worst consequences are excessive pressurization of the dome and seismic forces. Dome collapse caused by internal pressurization (e.g., H_2 deflagration, organic/nitrate reaction, organic solvent or gasoline fire) and seismic forces are discussed in other sections. The accidents second in potential severity are a load drop event and hazards that resulted in excessive uniform or concentrated load.

No credible scenario was identified that would result in dome collapse resulting from excessive uniform load because the loads required for failure are not attainable with current equipment or tank farm configurations. At present, the largest uniform load is 4,900 to 9,800 kg/m^2 (1,000 to 2,000 lb/ft^2) given a soil density of 2,080 kg/m^3 (130 lb/ft^3) and depth of 2.1 to 4.6 m (7 to 15 ft). (Note that 4.6 m [15 ft] is the dome soil cover near the wall of tanks with 2.4 m [8 ft] of soil cover over the central dome region.) As discussed in WHC-SD-TWR-RPT-002, *Structural Integrity and Potential Failure Modes of the Hanford High-Level Waste Tanks*, dome failure for SSTs and DSTs would require an additional 5.2 m (17 ft) of soil cover. Dome collapse from excessive load was therefore considered to be incredible.

Dome failure is possible due to a concentrated load of 2.8 x 10^5 to 5.4 x 10^5 kg (300 to 600 tons) per WHC-SD-TWR-RPT-002. At present the largest concentrated load weighs less than 2.3 x 10^5 kg (250 tons). This is the crane that was used to lower the mixer pump into Tank 241-SY-101. However, combining a load of this magnitude with several smaller concentrated loads does result in a total concentrated load approaching the limit.

Tank failure due to a load drop event was analyzed. It bounds failures involving excessive vacuum, aging and corrosion, internal loads, waste or waste addition to a DST annulus, high waste temperature (e.g., 241-C-106), high concrete temperatures resulting from loss of cooling, and accelerated wall corrosion and degradation. Calculations show that even if a tank were to fail from these causes, no airborne release would result as the walls fail but the dome remains intact. Load drops, however, can fail the dome with an associated potential airborne release.

The accidents covered in this section are as follows:

- Load drops onto SSTs, DST, DCRTs, and 20-ft-dia SSTs
- Excess concentrated loads on SSTs, DST, 20-ft-dia SSTs, and DCRTs.

Of these accidents, the largest consequences occur as a result of a load drop onto dry salt cake. This can only occur within an SST or DST. The DCRTs contain liquid or sludges. The 20-ft-dia SSTs can contain dry salt cake but the waste level is closer to grade. Failure due to uniform or concentrated load results in less of a consequence due to the ability of the soil to trap the fractured waste.

The load drop can occur onto the soil cover over the tank, onto the pits over the tank (primarily the pump pit), or onto a riser. The worst case is a load drop into the pump pit. The pump pit is chosen because of all the possible drop locations that could result in the load reaching the tank waste, this is structurally the weakest.

It is assumed that a mixer pump is dropped into the pump pit of a DST. A DST is chosen because these are the only tanks likely to contain mixer pumps. Some cover blocks are heavier than mixer pumps but the drop height necessary to break the dome from a cover-block drop is at least

10 times greater because of the larger associated impact area (WHC-SD-WM-TI-782, *Load Drop Evaluation for TWRS FSAR*). Therefore, the worst case is the drop of a mixer pump into a DST.

5.3.2.13.1 Accident Scenario Assuming No Controls.

Sequence of Events. For the load drop scenario assuming no controls, it is postulated that a 9,100 kg (20,000 lb) mixer pump is scheduled for tank insertion. The pump is attached to the crane, righted, and lifted. An operator error (or possibly equipment failure) is assumed to occur such that the pump is lifted high over the tank. (The pump might also be lifted high to clear an obstruction.) When the pump is over the pump pit, the sling breaks, or the pump is lifted even higher and the hook becomes dislodged as it hits the boom, or some other failure occurs that results in a pump drop. The pump drops from a height of 25 m (82 ft) onto the waste. The distances considered in setting the load drop height are as follows:

- 7.0 m (23 ft) from the waste to the dome
- 2.5 m (8.2 ft) from the dome to grade
- 15.5 m (51.0 ft) from grade to the pump bottom
- 17.1 m (56.0 ft) from the bottom of the pump to the top.

The total boom height is 42 m (137.7 ft). This is approximately the height of the boom when the Tank 241-SY-101 mixer pump was lowered into the tank. The drop height coupled with the pump weight results in an impact energy imparted to the pump pit floor of 1.8×10^6 J (1.3×10^6 ft-lb), which exceeds the dome capacity of 6.8×10^5 J (5.0×10^5 ft-lb) (WHC-SD-WM-TI-782). Calculations show that the drop of a mixer pump more than 7.6 m (25 ft) into a pump pit results in a breach of the dome.

The accident frequency assigned to this event is "unlikely" on the basis of consideration of historical data compiled from Occupational Safety and Health Administration records and data from the U.S. Navy (NUREG-0612, *Control of Heavy Loads at Nuclear Power Plants*) on the frequency of load drops.

Results Summary. The onsite and offsite radiological and toxicological consequences of a dropped load that results in tank structural failure are presented in Table 5.3.2.13-1. The supporting calculations are documented in WHC-SD-WM-CN-051, *The Effects of Load Drop, Uniform Load, and Concentrated Loads on Waste Tanks.*

Implication of Results. The onsite and offsite radiological consequences for the scenario assuming no controls are below the risk guidelines, as are the offsite toxicological consequences. The calculated onsite dose consequences for toxicological materials are above the risk guidelines. Consequently, additional controls are required to protect the onsite worker from the consequences of this scenario.

5.3.2.13.2 Accident Scenario Assuming Controls. The controls selected for the load drop scenario are preventive in nature and are presented in Section 5.2.3.13.4, "Controls." These controls prevent a load drop or a tank dome excessive load from causing a tank breach. Consequently, a scenario assuming controls was not developed.

5.3.2.13.3 Key Accident Scenario Assumptions.

Important to Accident Frequency. The accident frequency determination was set on the basis of the predicted number of load drops involving mixer pumps in the proximity of pump pits and tank domes. The Navy data used predicts load drops to occur at a frequency of 3×10^{-4} to 2.5×10^{-5} per lift. Only one or two mixer pump installations or removals are expected at the tank farms each year. The number of mixer pump installations or removals would have to increase significantly before the frequency category would be affected.

Important to Accident Consequences.

- The radiological and toxicological composition of the waste in the load drop scenario is that of DST solids. The waste is dry salt cake. These assumptions result in conservative dose estimates.
- The dose is related to drop height (WHC-SD-WM-CN-051). Calculations show that the drop of a mixer pump more than 7.6 m (25 ft) into a pump pit results in a breach of the dome.
- The dose is also related to the weight dropped (WHC-SD-WM-CN-051). The weight assumed for a load drop event was 9,100 kg (20,000 lb).

5.3.2.13.4 Controls. The following controls are applicable to SSTs, DSTs, aging waste facility tanks, DCRTs, catch tanks, and miscellaneous interim storage facilities as specified in the following tables.

Safety Structure, Systems, and Components. No equipment was identified as necessary to prevent or mitigate the consequences of this accident. Therefore, no equipment was identified as Safety-Class or Safety-Significant.

Technical Safety Requirement Controls. The Technical Safety Requirement controls selected to prevent load drops are identified in Table 5.3.2.13-2. For each Technical Safety Requirement control, the safety function is described and additional comments are provided as appropriate.

The maximum load lift height is set at 20 ft to account for any uncertainties in the load drop calculation (WHC-SD-WM-TI-782) and to be conservative. The other limits contained in Table 5.3.2.13-2 come from calculations performed in WHC-SD-WM-TI-775, *Structural Assessment of Accident Loads*, and WHC-SD-WM-RPT-002.

Defense-in-Depth. In addition to the previously identified Technical Safety Requirement controls, other engineering and administrative controls provide further Defense-in-Depth protection for the public and workers against the risk of load drops. The Defense-in-Depth controls along with their safety function and additional comments are identified in Table 5.3.2.13-3.

5.3.2.13.5 References.

NUREG-0612, 1980, *Control of Heavy Loads at Nuclear Power Plants*, U.S. Nuclear Regulatory Commission, Washington, D.C.

WHC-SD-TWR-RPT-002, 1996, *Structural Integrity and Potential Failure Modes of the Hanford High-Level Waste Tanks*, Rev. 0, Westinghouse Hanford Company, Richland, Washington.

WHC-SD-WM-CN-051, 1996, *The Effects of Load Drop, Uniform Load, and Concentrated Loads on Waste Tanks*, Rev. 0, Westinghouse Hanford Company, Richland, Washington.

WHC-SD-WM-TI-775, 1996, *Structural Assessment of Accident Loads*, Rev. 0, Westinghouse Hanford Company, Richland, Washington.

WHC-SD-WM-TI-782, 1996, *Load Drop Evaluation for TWRS FSAR*, Rev. 0, Westinghouse Hanford Company, Richland, Washington.

5.3.2.13.6 Bibliography.

DOE-RL-92-36, 1993, *Hanford Site Hoisting and Rigging Manual*, U.S. Department of Energy, Richland Operations Office, Richland, Washington.

Table 5.3.2.13-1. Consequences of a Load Drop Assuming No Controls.

Consequences	Onsite dose/exposures		Offsite dose/exposure	
	Calculated dose	Risk guideline	Calculated dose	Risk guideline
Radiological	30 mSv (3 rem)	50 mSv (5 rem)	0.03 mSv (0.003 rem)	5 mSv (0.5 rem)
Toxicological (SOF)	5	1 (ERPG-2)	0.0003	1 (ERPG-1)

ERPG = Emergency Response Planning Guidelines.
mSv = millisievert.
SOF = sum-of-fractions.

Table 5.3.2.13-2. Technical Safety Requirement Controls for Load Drops. (2 sheets)

Control	Safety function	Comments
1.0 SSTs (except 200 Series tanks), DSTs, and AWF tanks		
1.1 Tank Load Control Program Key elements: 1. For critical lifts over SSTs and DSTs: • Hanford Site Hoisting and Rigging Manual (DOE 1993) requirements shall be met • Height of load bottom shall not exceed 6.1 m (20 ft) over the soil or pit floor 2. External load on the tank dome: • SST uniform load shall not be modified • DST uniform loads shall be below 8.3 ft of soil (AY and AZ tank farms, and 7.5 ft of soil (SY, AW, AN, AP tank farms) • 100 Series SST and DST concentrated load shall not exceed 100 tons on a temporary or permanent basis	 Prevents load drop accidents (i.e., reduces the frequency of load drops) Limits load handling over a tank so that in the event the load is dropped the tank dome would not collapse Prevents exceeding external loads that may cause tank dome failure	Critical lifts are defined in the Hanford Site Hoisting and Rigging Manual (DOE 1993) The cover blocks offer little resistance to load drops due to their failure at low bending moments and are not considered in determining compliance with the 20 ft limit. The 20 ft limit considers the largest mixer pump (20,000 lbs) and cover blocks as the limiting loads
2.0 200 Series SSTs		
2.1 Tank Load Control Program Key elements: 1. For critical lifts over the 200 Series SSTs, Hanford Site Hoisting and Rigging Manual (DOE 1993) requirements shall be met 2. External load on the tank dome: • 200 Series uniform loads shall not be modified • 200 Series concentrated load shall not exceed 50 tons on a temporary or permanent basis	 Prevents load drop accidents (i.e., reduces the frequency of load drops) Prevents exceeding 200 Series external tank loads that may cause tank dome failure	Critical lifts are defined in the Hanford Site Hoisting and Rigging Manual (DOE 1993) Compliance with the Hanford Site Hoisting and Rigging Manual (DOE 1993) is sufficient based on the accident risk (i.e., frequency and consequence) 200 Series SST uniform load restrictions are not required because of the large existing margin of safety
3.0 Double Contained Receiver Tanks (DCRTs)		
3.1 Tank Load Control Program Key elements: 1. For critical lifts over the DCRTs, Hanford Site Hoisting and Rigging Manual (DOE 1993) requirements shall be met 2. External load on the tank dome: • Additional DCRT concentrated load shall be prohibited	 Prevents load drop accidents (i.e., reduces the frequency of load drops) Prevents exceeding DCRT external loads that may cause tank failure	Critical lifts are defined in the Hanford Site Hoisting and Rigging Manual (DOE 1993) Compliance with the Hanford Site Hoisting and Rigging Manual (DOE 1993) is sufficient based on the accident risk (i.e., frequency and consequence) DCRT uniform load restrictions are not required because DCRTs are located in vaults whose cover blocks are aboveground

Table 5.3.2.13-2. Technical Safety Requirement Controls for Load Drops. (2 sheets)

Control	Safety function	Comments
4.0 Catch Tanks		
4.1 Tank Load Control Program Key elements: 1. External load on the tank dome: • Catch tank uniform load shall not be modified • Additional catch tank concentrated load shall be prohibited	Prevent load drop accidents over catch tanks and prevent exceeding catch tank external loads that may cause tank dome failure	The requirements of this control are based on existing analysis that shows several catch tanks have soil loads that exceed code allowables To implement this control, barriers (fences) are required to identify and restrict access in the vicinity of catch tanks
5.0 MISFs		
5.1 Tank Load Control Program Key elements: 1. Critical lifts shall not be performed over MISFs 2. External load on the tank dome: • MISF uniform load shall not be modified • Additional MISF concentrated load shall be prohibited	Prevent load drop accidents over MISFs and prevent exceeding MISF external tank loads that may cause tank dome failure	Critical lifts are defined in the Hanford Site Hoisting and Rigging Manual (DOE 1993) The requirements in this TSR are based on the absence of structural analysis on the MISFs To implement this TSR, barriers (fences) are required to identify and restrict access in the vicinity of MISFs

AWF = Aging Waste Facility.
DCRT = double-contained receiver tanks.
DST = double-shell tank.
MISF = miscellaneous inactive storage facility.
SST = single-shell tank.
TSR = Technical Safety Requirement.

Table 5.3.2.13-3. Defense-in-Depth Controls for Load Drops.

Control	Safety function	Comments
A Radiation Protection Program shall be established and implemented consistent with applicable procedures	Provides radiological controls to protect onsite and facility workers	None
A facility Health and Safety Plan shall be established and implemented consistent with applicable procedures	Provides for worker protection by restricting activities in high winds	None
A Job Control System shall be established and implemented consistent with applicable procedures	Provides assurance that work activities including appropriate controls are planned and approved. This includes requirements to place load absorber material around the riser when very heavy loads are installed	None
Operator Training is required prior to performance of activities affecting safety	Provides assurance that operation of facilities are by Hanford Site experienced crews with specific training in these activities	None
Operating procedures shall be established and implemented for activities affecting safety	Provides assurance that operations are performed to approved plant procedures	None
Emergency Response Plan/Procedures shall be established and implemented consistent with applicable procedures	Provides assurance that plans and procedures are in place to respond to emergency conditions	None
Establish criteria and document tank loadings for concentrated and distributed load limits and incremental load changes	Provides controls to maintain dome loads within structural capacity of the tanks	None

This page intentionally left blank.

5.3.2.14 Flammable Gas Deflagrations.

Purpose of Analysis: This section discusses the hazards and controls associated with the generation, storage, release, and postulated combustion of flammable gases in Tank Waste Remediation System (TWRS) facilities and structures. This hazard poses an unreviewed safety question (USQ) originally identified in 1990 and applicable to a subset of the 177 TWRS underground waste storage tanks. The original USQ has been closed for Tank 241-SY-101, which was the facility originally identified to be of greatest concern, based on (1) analyses documented in LA-UR-92-3196, *A Safety Assessment for Proposed Pump Mixing Operations to Mitigate Episodic Gas Releases in Tank 241-SY-101: Hanford Site, Richland, Washington*, and (2) the installation and operation of a mixer pump that prevents the retention and spontaneous release of large amounts of waste-generated gases. The USQ remains open for the balance of affected TWRS facilities.

The original flammable gas USQ has been replaced by a new USQ determination (TF-96-0433) that reflects an increased understanding of the flammable gas hazard and an accumulation of related field observations and experience. The new USQ clarifies the applicability of the USQ to additional facilities and structures within TWRS and identifies a broader range of accidents and hazards not adequately addressed in the existing TWRS Authorization Basis. The new USQ consolidates all issues related to flammable gas hazards that have a common root cause. Specifically, the new USQ applies to any TWRS engineered structure, container, or receiver managed and operated at TWRS, and at which, Hanford Site high-level waste may be stored in a condition and for a period of time that could result in the generation, accumulation, or release of flammable gas. Per TF-96-0433, *Consolidation of Flammable Gas/Slurry Growth Unreviewed Safety Question Issues*, the Authorization Basis for Tank 241-SY-101 adequately addresses the flammable gas hazard; therefore, the new USQ does not apply to Tank 241-SY-101. The USQ applies to the following:

- Single-shell waste storage tanks
- Double-shell waste storage tanks (except Tank 241-SY-101)
- Aging waste facility storage tanks
- Double-contained receiver tanks (DCRTs)
- Inactive miscellaneous underground storage tanks
- Catch tanks
- 242-S and 242-T Evaporators
- 244-AR Lag Storage Vault Facility

- 244-CR Lag Storage Vault Facility
- Waste transfer systems (e.g., transfer lines, valve pits, diversion boxes, process pits, and clean-out boxes).

A justification for continued operation (JCO) Appendix E has been prepared in correspondence with the new USQ determination. The JCO discusses the flammable gas hazard in each of the facilities addressed by the USQ. In part, the discussion is based on observations and available data. A three-pronged approach to risk management that addresses ventilation, monitoring, and ignition control is also presented in the document. Detailed controls for managing the risk of the flammable gas hazard, and qualitative conclusions regarding the effectiveness of those controls, are provided in Appendix E.

This BIO is consistent with the basis for closure of the original flammable gas USQ for Tank 241-SY-101.

Analysis Strategy: Results of available analysis of flammable gas accident scenarios assuming no controls are presented in the following sections. The presentation of accident analysis results (assuming no controls) serves to illustrate the need for control strategies to manage the risk of flammable gas hazards in TWRS facilities and to emphasize the rigor at which controls need to be applied. The controls presented are consistent with those in Appendix E. The expected efficacy of these controls is based on the judgment documented in the JCO. The TWRS Final Safety Analysis Report will present details of accident scenario analyses with and without credit for hazard control strategies.

The existing Authorization Basis analyses for operations in Tank 241-SY-101 are documented in LA-UR-92-3196. The results of the Tank 241-SY-101 analyses are not repeated in this document.

5.3.2.14.1 Accident Scenario Assuming No Controls.

Sequence of Events. Nuclear waste stored within TWRS facilities is capable of generating flammable gas (i.e., principally hydrogen gas) to varying degrees depending on the type, amount, geometry, and condition of the waste in the array of TWRS waste receptacles. Radioactive waste generates hydrogen through the radiolysis of water, thermolytic decomposition of organic components, and corrosion of a tank's carbon steel walls. Radiolysis and thermolytic decomposition also generate ammonia. Non-flammable gases such as nitrogen, which act as diluents, are also produced. Additional flammable gases, such as methane and an oxidizer, nitrous oxide, are generated by chemical reactions between various degradation products of organic chemicals originally present in the tanks. Volatile or semivolatile organic chemicals in some tanks also produce organic vapors. The gas produced in this generation is either (1) released continually to the tank vapor spaces (historically referred to as a steady state) or (2) retained by the waste matrix. Retained gas may be released in either a spontaneous or induced gas release event that can significantly increase the flammable gas concentration

in the tank vapor space. The flammable gas JCO elaborates on the range of hazardous scenarios, which include:

- Steady-state gas release (more correctly referred to as chronic release)
- Accumulation of released gases in (1) tank dome spaces; (2) sealed pits, risers, and connected air spaces; or (3) waste-intrusive equipment
- Retention of gas within the waste matrix followed by (1) spontaneous or natural release for example, from buoyancy instability or (2) release from waste-disturbing action or motion
- Flammable gas burns (1) beneath the waste surface or (2) in vapor spaces following release from stored waste.

The four analyzed scenarios discussed in this Basis for Interim Operation document are those selected by the Final Safety Analysis Report development process as representative per the hazard identification techniques discussed in the beginning of Chapter 5.0. These analyses are documented in WHC-SD-WM-CN-055, *Flammable Gas Deflagration Consequence Calculations for the Tank Waste Remediation System Basis for Interim Operation.* In all four cases, no credit was taken for any beneficial effects that flammable gas monitoring, ignition control practices, or ventilation could have to either prevent or mitigate an accident. The four scenarios are as follows:

1. Deflagration in a double-shell tank (DST) headspace
2. Deflagration in an aging waste facility (AWF) tank headspace
3. Deflagration in a single-shell tank (SST) headspace
4. Combustion in a DCRT.

The first three cases fundamentally involve the same scenario: the spontaneous release of stored gas (i.e., a gas release event) followed by deflagration of the flammable gas in the tank headspace. The three cases were analyzed to account for known differences in waste characteristics and waste tank physical features and properties. In all three cases, the natural processes for generating gas are assumed to result in retention and accumulation of gas in the waste matrix. Conservative assumptions unique to what is known about DSTs (including AWF tanks) and SSTs are made regarding the maximum amount of gas that can be released into the tank headspace at once. This amount of gas is assumed in each case to be that which when burned imparts enough pressure to the tanks (45 psig for DSTs and AWF tanks, 11 psig for SSTs) to reach a failure limit which leaves the tank intact (i.e., does not result in dome collapse) yet creates multiple unfiltered pathways for the release of tank materials. The detailed basis for the selection of these scenarios, their applicability to individual facilities, and associated implications for graded control strategies will be included in the FSAR.

The gas retained in the waste is conservatively assumed to be released into the tank headspace in such a manner that none escapes through normal ventilation paths. Based on historical gas release data, this assumption is justified as the time for the gas to be released from the waste could be less than the ventilation time constant for the headspace. A small energy source

(0.017 mJ to 0.1 mJ) from any number of causes is assumed to occur. These causes range from static electricity to metal-on-metal contact to faulty electrical equipment. Due to factors related to the size of the underground waste storage tanks, complete combustion of the released gas is assumed (NUREG/CR-5275, *The Effect of Obstacles and Transverse Venting on Flame Acceleration and Transition to Detonation for Hydrogen-Air Mixtures at Large Scale*). The ensuing pressure transient damages the tank and creates unfiltered release pathways such as that resulting from weld failure and displacement of a riser plate. Released radiological and toxicological material originates from the ventilation system and the material entrained from the tank waste by the deflagration. As noted in WHC-SD-WM-CN-055, analysis assumptions and methods critical to the determination of receptor dose are consistent with those documented by Los Alamos National Laboratories in safety analyses developed to provide the Authorization Basis for TWRS operations.

As documented in WHC-SD-WM-CN-055, the consequences of the tank headspace deflagration scenarios are judged to bound consequences of a postulated deflagration in the annulus surrounding the primary tank in a DST or an AWF tank. A deflagration in the annulus is postulated either as the result of a waste transfer routing misalignment or a leak in the primary tank. In either case, it is postulated that sufficient waste could accumulate which would block the annulus ventilation flow paths. Gas generated by the waste could then accumulate and combust assuming the presence of a spark source.

The representative accident for DCRTs involves the steady state generation of flammable gas from waste stored in a DCRT and insufficient air flow to prevent accumulation. Flammable gas is assumed to accumulate in the primary receiver vessel such that a deflagration or detonation occurs from an ignition source. Sources of gas generation and release include radiolysis, organic decomposition, and generation and evolution of ammonia. Vessel rupture and failure of the DCRT vault are postulated. Commensurate releases to the onsite and offsite receptors are documented in WHC-SD-WM-CN-055.

The frequency of deflagrations in DCRTs, DSTs (including AWF tanks) and SSTs is estimated to be "anticipated" (i.e., in the range of 1×10^{-2} to 1 per year) per tank, as documented in WHC-SD-WM-CN-041, *Tank Farm Deflagration Rate Due to Various Ignition Sources* and WHC-SD-WM-RPT-048, *Safety Study of Interim Stabilization of Non-Watchlist Single-Shell Tanks*.

Results Summary. The results of the four representative accident scenarios assuming no controls are summarized in Table 5.3.2.14-1. The supporting calculations are documented in WHC-SD-WM-CN-055.

Implications of Results. The analysis results indicate that the radiological and toxicological risk guidelines are exceeded for the onsite and offsite receptors for the SST headspace deflagration and DCRT combustion scenarios. The radiological and toxicological risk guidelines are exceeded for the onsite receptor for the DST and AWF tank headspace deflagration scenarios. The radiological and toxicological risk guidelines for the offsite receptor, however, are met for the DST and AWF tank headspace deflagration scenarios.

The results clearly imply a need to institute controls to prevent or mitigate hazards associated with flammable gas in TWRS facilities. The accident analysis results do not provide a detailed representation of the flammable gas risk posed by waste stored in every waste receptacle. All waste storage tanks and the balance of waste receivers (e.g., catch tanks or transfer systems) do not contain waste in forms and quantities capable of approaching the consequences presented in these analyses. In the absence of sufficient information to discount or fine tune the need for controls in all facilities, however, the JCO strategy is to expeditiously implement achievable and practical controls to manage postulated flammable gas risks. While doing so, progress towards safety issue resolution and USQ closure will continue to concentrate on remaining uncertainties regarding the quantification of risk and effectiveness of control strategies (Chapter 7.0, "Conclusions").

5.3.2.14.2 Accident Scenario Assuming Controls.

Sequence of Events. Flammable gas controls for the facilities affected by USQ TF-96-0433 are developed and presented in Appendix E. The controls are aimed primarily at prevention of ignition of flammable gas (although certain aspects of the control strategy are mitigative in nature). Provisions for ventilation serve to prevent accumulation of chronically released gases and possibly reduce the time at risk assuming the occurrence of a spontaneous or induced gas release. Flammable gas monitoring requirements serve to validate ventilation effectiveness as well as prevent or halt manned activities when margin of safety is considered to be insufficient (i.e, conditions are such that the flammable gases exist in concentrations greater than 25% of the lower flammability limit). Ignition controls related to work practices and equipment requirements serve to eliminate, to the greatest extent practical, ignition sources.

This three-pronged control strategy (ventilation, monitoring, ignition source control) is assumed to be effective in preventing either the accumulation of flammable gases where ignition sources may be present or to eliminate ignition sources where flammable gases may be present. Therefore, the deflagrations in the three preceding scenarios for DSTs, AWF tanks, and SSTs are assumed to be prevented because of the absence of an ignition source, and the DCRT scenario is assumed to be prevented by the provision of sufficient ventilation to avoid accumulation of gases to flammable concentrations. This document does not present analysis results which quantitatively demonstrate the effectiveness of controls to prevent flammable gas deflagrations.

Results Summary. Not applicable. See discussion on sequence of events. For accident analysis results and implications assuming controls for Tank 241-SY-101, see LA-UR-92-3196.

Implications of Results. Not applicable. See discussion on sequence of events. For accident analysis results and implications assuming controls for Tank 241-SY-101, see LA-UR-92-3196.

5.3.2.14.3 Key Accident Scenario Assumptions. When evaluating proposed changes or discoveries associated with the facilities affected by TF-96-0433, the USQ process provides the means to verify the ongoing applicability of the data in Appendix E. Also as part of the USQ process, changes or discoveries

must be evaluated against the analysis assumptions documented in WHC-SD-WM-CN-055. Areas which may affect the validity of the analyses documented in WHC-SD-WM-CN-055 are listed below.

When evaluating proposed changes or discoveries associated with Tank 241-SY-101, the USQ process will consider the specific assumptions used in LA-UR-92-3196.

Important to Accident Frequency. WHC-SD-WM-CN-041 characterizes the frequency of a deflagration in DSTs and SSTs to be categorized as "anticipated," the highest rate of occurrence. Therefore, it is not necessary to protect assumptions which support this conclusion. Instead, rigorous adherence to the JCO control strategy aimed at reducing frequency of occurrence is required. The same applies to the DCRT scenario frequency determination documented in WHC-SD-WM-RPT-048.

Important to Accident Consequence. The magnitudes of the onsite and offsite receptor consequences depend on numerous key assumptions which may require validation as the result of proposed changes, new information, or discoveries. WHC-SD-WM-CN-055 must be reviewed for a thorough understanding of all important parameters. These include:

- Maximum high-efficiency particulate air filter, prefilter, and de-entrainer loading rates of 200 mrem/h contact dose rate, individually.
- The equivalent of one loaded prefilter volume, one high-efficiency particulate air filter volume, and a prefilter volume are assumed to be deposited in the ventilation duct work for the DST, AWF tank, and SST cases, respectively.
- The DST and AWF tank failure pressure (failure previously defined) is 45 psig. With the exception of the uncertainty regarding a seismic initiator, a gas release and deflagration is not assumed to cause dome collapse. The credibility of tank dome collapse as the result of a flammable gas deflagration will be discussed in the FSAR.
- The SST failure pressure is 11 psig. With the exception of the uncertainty regarding a seismic initiator, a gas release and deflagration is not assumed to cause dome collapse. The credibility of tank dome collapse as the result of a flammable gas deflagration will be discussed in the FSAR.
- Release of additional gases that may be uniquely induced by the motions of an earthquake (for Performance Category 3 existing facility) is not accounted for in this analysis. This is the subject of significant technical uncertainty and will be addressed further in the FSAR.
- The DST case source term is based on DST liquids. The AWF tank case source term is based on AWF liquids. The SST case source term is based on SST solids. The DCRT case source term is based on 5% SST solids and 95% SST liquids by volume.

- To approach conditions which may be postulated to cause dome failure, the capability to retain and release a significant amount of gas must exist. Maximizing the retention and release potential, therefore, involves the assumption that a tank is filled to its waste capacity limit. A full tank also has the effect of minimizing the headspace volume in which the energy of a deflagration would be dissipated, thereby maximizing pressure and possible damage to the tank. Commensurately, the analyses assumed a headspace volume of approximately 1,000 cubic meters.

- The total released materials from the ventilation system and that which is entrained from the waste surface by the deflagration are assumed to be released in 200 seconds. The release duration is particularly important to the toxicological consequence calculation and is based on the analysis methodology documented in LA-UR-92-3196.

- Waste density is assumed to be 1.65 g/cm^3.

NOTE: Released gas compositions vary from tank to tank and are unique to the waste being stored. No explicit assumption has been made in the DST, AWF tank, and SST, representative analyses regarding undiluted gas composition. Rather, it is assumed that gas compositions and amounts released are such that deflagration may result in reaching the tank failure pressure.

5.3.2.14.4 Controls. The controls presented here are based on Appendix E. This chapter does not repeat or paraphrase each individual control. Instead, the basic concepts of the overall control strategy are presented. Appendix E and LA-UR-92-3196 need to be consulted to gain a working understanding of the bases for control derivation.

The flammable gas JCO control strategy is constructed around three factors affecting the nature and extent of postulated flammable gas hazards. These are: (1) waste behavior, (2) the type of operational activity which may be performed at a given TWRS facility, and (3) the region or location within a given TWRS waste receptacle. More specifically:

1. Type of waste behavior which is known or postulated to be possible for a given facility:

   Steady-state gas release
   "Large" gas release event
   "Small" gas release event
   Spontaneous gas release event
   Induced gas release event

   A "large" gas release event is defined to be capable of pressurizing the dome space above atmospheric such that flammable gases may occupy pits, flow out of open risers, and other spaces external to the dome space.

2. The impact of tank farm operational activities on the waste contained in a facility or structure:

   Nonwaste disturbing
   Local waste disturbing
   Global waste disturbing

   Local waste disturbing activities include such work as grab sampling and are not considered to be capable of affecting significant portions of the waste. Global waste disturbing activities, such as salt well pumping, more aggressively affect a larger fraction of the waste.

3. The location or region within a waste receptacle where work activities are being performed:

   Waste intrusive
   Dome intrusive
   Ex-tank intrusive
   Nonintrusive

   Waste intrusive locations include below the waste surface and within the vapor spaces of waste intruding equipment where undiluted waste gas may accumulate. Dome intrusive locations are those between the top of the risers and the waste surface, including ventilation systems up to the first mixing point. Ex-tank intrusive locations are those outside tank openings which are directly connected to the dome space; this region also includes boundaries of greenhouses as described in Appendix E.

These factors are used to specify the aspects of the three-pronged approach to flammable gas risk management (i.e., ventilation, monitoring and ignition control), which are required across the range of TWRS facilities and operational activities. Controls differ from facility to facility, or from activity to activity in a given facility, depending upon each of these factors.

Appendix E refers to two sets of ignition source controls which are each invoked depending on the facility and the type of activity performed in the facility. The ignition source controls address electrical equipment requirements, nonelectrical equipment and materials requirements, and work practices. Set 1 primarily applies to activities and locations which involve direct contact with waste and undiluted waste gases. Set 2 primarily applies to circumstances where flammable gas conditions may be postulated to occur in the dome space or ex-tank locations. To ensure consistent application and interpretation of industry standards used by these control sets, the Flammable Gas Equipment Advisory Board has been formed to oversee the implementation of the ignition source controls.

The detailed requirements for ventilation, monitoring, and ignition control are specified in the Basis for Interim Operation Technical Safety Requirements.

Safety Systems, Structures, and Components. The results of the representative analyses documented in WHC-SD-WM-CN-055 indicate the need for controls to manage the risk of flammable gas hazards. These analyses do not necessarily represent the magnitude of risk that each waste containing TWRS facility or structure poses; risks posed by many individual facilities are judged to be smaller than those associated with the representative scenarios. Because the offsite radiological risk guidelines are exceeded in some cases and onsite guidelines are amply exceeded in all cases; however, it is implied that any facility which is represented by these analyses requires Safety-Class or Safety-Significant structures, systems, and components (Table 5.3.2.14-2). Because of the open status of the USQ and the technical uncertainties associated with the flammable gas safety issue, it is assumed that all installed equipment necessary to implement the flammable gas controls merit a Safety-Class designation. Additional analysis provided by the Final Safety Analysis Report or in support of safety issue resolution and USQ closure may provide refinement to this approach.

Technical Safety Requirement Controls. The fundamental control strategy for all affected facilities is summarized in Table 5.3.2.14-3. The specific controls for each facility are in the Technical Safety Requirements and are derived in the JCO.

Defense-in-Depth. There are no unique and specific Defense-in-Depth measures which apply to the risk management of the flammable gas hazard. The existence of operator training, plant procedures, the job control system, and emergency planning are all acknowledged to support accident prevention and mitigation.

5.3.2.14.5 References.

LA-UR-92-3196, 1995, *A Safety Assessment for Proposed Pump Mixing Operations to Mitigate Episodic Gas Releases in Tank 241-SY-101: Hanford Site, Richland, Washington*, Rev. 14, Los Alamos National Laboratory, Los Alamos, New Mexico.

NUREG/CR-5275, 1989, *The Effect of Obstacles and Transverse Venting on Flame Acceleration and Transition to Detonation for Hydrogen-Air Mixtures at Large Scale*, Sandia National Laboratories, Albuquerque, New Mexico.

TF-96-0433 (USQ Tracking No.), 1996, *Consolidation of Flammable Gas/Slurry Growth Unreviewed Safety Question Issues*, Rev. 1, Westinghouse Hanford Company, Richland, Washington.

WHC-SD-WM-CN-041, 1996, *Tank Farm Deflagration Rate Due to Various Ignition Sources*, Rev. 0, Westinghouse Hanford Company, Richland, Washington.

WHC-SD-WM-CN-055, 1996, *Flammable Gas Deflagration Consequence Calculations for the Tank Waste Remediation System Basis for Interim Operation*, Rev. 0, Westinghouse Hanford Company, Richland, Washington.

WHC-SD-WM-RPT-048, 1992, *Safety Study of Interim Stabilization of Non-Watchlist Single-Shell Tanks*, Rev. 0, Westinghouse Hanford Company, Richland, Washington.

Table 5.3.2.14-1. Results Assuming No Controls Accident Scenario for Flammable Gas Deflagrations.

Scenario	Receptor/hazard	Calculated dose/hazard	Risk guidelines
Double-shell tank headspace deflagration	Offsite/radiological	0.16 mSv (16 mrem)	1 mSv (0.1 rem)
	Onsite/radiological	190 mSv (19 rem)	5 mSv (0.5 rem)
	Offsite/toxicological	0.94	1
	Onsite/toxicological	1,100	1
Aging Waste Facility tank headspace deflagration	Offsite/radiological	0.04 mSv (4 mrem)	1 mSv (0.1 rem)
	Onsite/radiological	44 mSv (4.4 rem)	5 mSv (0.5 rem)
	Offsite/toxicological	0.7	1
	Onsite/toxicological	820	1
Single-shell tank headspace deflagration	Offsite/radiological	5.7 mSv (0.57 rem)	1 mSv (0.1 rem)
	Onsite/radiological	6,500 mSv (650 rem)	5 mSv (0.5 rem)
	Offsite/toxicological	2.3	1
	Onsite/toxicological	1,800	1
Combustion in double-contained receiver tank	Offsite/radiological	3.8 mSv (0.38 rem)	1 mSv (0.1 rem)
	Onsite/radiological	4,400 mSv (440 rem)	5 mSv (0.5 rem)
	Offsite/toxicological	1.1	1
	Onsite/toxicological	1,000	1

NOTE: The frequencies for the DST, AWF tank, and SST cases are for the active mode, i.e., waste intrusive or waste disturbing activities occurring in the tank. Also, accident analysis scenarios and results specific to Tank 241-SY-101 are found in LA-UR-92-3196, A Safety Assessment for Proposed Pump Mixing Operations to Mitigate Episodic Gas Releases in Tank 241-SY-101: Hanford Site, Richland, Washington, Rev. 0, Los Alamos National Laboratory, Los Alamos, New Mexico.

AWF = Aging Waste Facility
DST = double-shell tank
mSv = millisievert
SST = single-shell tank

Table 5.3.2.14-2. Safety Systems, Structures, and Components for Flammable Gas Deflagrations. (2 sheets)

Structures, systems, or components	Safety classification		Safety function	Comments
	SC	SS		
Primary tank leak detection system in all DSTs and AWF tanks	X		Provide indication that corrective action is required to avoid accumulation and deflagration of waste gas in the annulus space	None
The SSCs listed below are required to implement the LA-UR-92-3196 Revised (Rev. 14, March 31, 1995) Level 1 Controls for 241-SY-101:				Refer to LA-UR-92-3196, Rev. 14
1. Mixer Pump	X		1. Reduce the frequency of a flammable gas deflagration by mixing, releasing flammable gases generated and trapped in the waste	
2. Hydrogen Monitor	X		2. Provide indication and alarm for hydrogen gas concentration in the 241-SY-101 vapor space to the operations staff Provide interlock to stop mixer pump operation if H_2 concentration reaches 0.75% (7,500 ppm) by volume	
3. Level Monitoring System	X		3. Provide indication of tank level which directs operation of the mixer pump	
4. Pressure Monitoring System	X		4. Provide indication and alarm for tank dome pressure. Provide interlock to stop mixer pump operation on high pressure	
5. Ventilation Flowmeter	X		5. Provide indication and alarm for ventilation flow rate. Provide interlocks to stop mixer pump operation on high or low flow rate	
6. SY-101 ammonia detection systems	X		6. Detect ammonia in the tank headspace/exhaust gas and alarm on the data acquisition system (DACS) when a high level of ammonia exists	
7. SY-101 temperature monitoring system	X		7. Provide indication and alarm for tank waste temperature. Provide interlock to stop mixer pump operation on high temperature	
Active ventilation in all DSTs, all AWF tanks and the following SSTs: C-105, 106, and SX-101, 102, 103, 104, 105, 106, 107, 108, 109, 110, 111, 112, 114	X		Maintain flammable gas concentrations in tank dome spaces, due to steady state releases, below 25% of the LFL	Active ventilation is required for the listed single shell tanks because the JCO relies on available vapor space sampling data to reach conclusions regarding the steady state release hazard. Therefore, existing ventilation configurations cannot be degraded

Table 5.3.2.14-2. Safety Systems, Structures, and Components for Flammable Gas Deflagrations. (2 sheets)

Structures, systems, or components	Safety classification		Safety function	Comments
	SC	SS		
Passive ventilation for all SSTs not listed above	X		Maintain flammable gas concentrations in tank dome spaces, due to steady state releases, below 25% of the LFL	None
DCRT ventilation flow (244-A, 244-BX, 244-CR, 244-S, 244-TX, 244-U)	X		Safety function is to prevent steady state accumulation of flammable gases	An assessment is required prior to placing new waste types in a DCRT to verify that airflow is sufficient to maintain gas concentrations less than 25% of the LFL Air flow may be provided via waste level dip tubes or other means
Dip-tube air flow for 244-AR vault TK-002	X		Dip tube inlet air must supply at least 3 cfh Safety function is to prevent steady state accumulation of flammable gases	None

AWF = Aging Waste Facility
DCRT = double-contained receiver tank
DST = double-shell tank
GRE = gas release event
JCO = Justification for Continued Operation
LFL = lower flammability limit
SC = Safety-Class
SS = Safety-Significant
SSC = structure, system, and component
SST = single-shell tank

Table 5.3.2.14-3. Technical Safety Requirement Controls for Flammable Gas Deflagrations. (2 sheets)

Control strategy	Safety function
1. Dilution by ventilation 2. Gas monitoring (characterization sampling and work activity entry gas monitoring)	Assure that steady state release of flammable gas does not accumulate in flammable concentrations in vapor spaces of TWRS facilities and structures
1. Ignition source controls (Set 2) at all times 2. Work activity entry gas monitoring	Assure that if flammable gas accumulates in vapor spaces not within the direct flow paths of ventilation (such as sealed risers and pits), work activities will not commence
1. Ignition source controls (Set 1) at all times	Prevent the ignition of flammable gases within the waste
1. Ignition source controls (Set 2) in ex-tank and dome intrusive locations at all times 2. Continuing gas monitoring during work activities	Prevent the ignition of flammable gases that may be present as the result of the occurrence of a gas release event and reduce the possibility of the conduct of manned activities during a gas release event. This control strategy addresses "large" GREs as previously defined
1. Ignition source controls (Set 2) for dome-intrusive locations at all times 2. Continuing gas monitoring during work activities	Prevent the ignition of flammable gases that may be present as the result of the occurrence of a gas release event and reduce the possibility of the conduct of manned activities during a gas release event. This control strategy addresses "small" GREs as previously defined
1. Ignition source controls (Set 2) in ex-tank and dome intrusive locations during waste disturbing operations and activities 2. Continuing gas monitoring during manned waste disturbing activities	Prevent the ignition of flammable gases that may be present as the result of a "large" induced GRE and provide information to be used to halt manned activities, as necessary
1. Ignition source controls (Set 2) for dome intrusive locations during waste disturbing operations and activities 2. Continuing gas monitoring during manned waste disturbing activities	Prevent the ignition of flammable gases that may be present as the result of a "small" induced GRE and provide information to be used to halt manned activities, as necessary

Table 5.3.2.14-3. Technical Safety Requirement Controls for Flammable Gas Deflagrations. (2 sheets)

1. Monitoring before energizing equipment inside waste intruding equipment and continuing monitoring during use of equipment, or 2. Purge or flush prior to energizing equipment and during use of equipment, or 3. Ignition controls (Set 1) at all times	Prevent the ignition of flammable gases that may have accumulated in void spaces of waste intrusive equipment
1. The annulus leak detection must be operable and operating in all DSTs and AWF tanks	This provides indication that corrective action is required to avoid the accumulation and deflagration of flammable gas in the annulus space of DSTs and AWF tanks
1. Implement the Level 1 controls required by LA-UR-92-3196	Assure effective mitigation and safe operations of Tank 241-SY-101 with respect to flammable gas hazards
1. Rotary mode core sampling is permitted only per approved Authorization Basis	Prevention of flammable gas deflagration initiated by rotary mode core sampling operations
1. HEPA filter controls - Periodic radiation surveillance - Replacement based on accumulation	Reduce consequences from a possible HEPA filter failure by limiting the inventory available for release
1. Excavation controls reduce the likelihood of inadvertently intruding any structure potentially containing flammable gas	Prevent ignition of flammable gases
1. Excavation controls reduce the likelihood of inadvertently intruding any structure potentially containing flammable gas	Prevent ignition of flammable gases

LA-UR-92-3196, A Safety Assessment for Proposed Pump Mixing Operations to Mitigate Episodic Gas Releases in Tank 241-SY-101: Hanford Site, Richland, Washington, Rev. A, Los Alamos National Laboratory, Los Alamos, New Mexico.

AWF = Aging Waste Facility
DST = double-shell tank
GRE = gas release event
JCO = Justification for Continued Operation
LFL = lower flammability limit
TWRS = Tank Waste Remediation System

5.3.2.15 Organic Solvent Fire.

Purpose of Analysis: The purpose of this analysis is to evaluate the risks associated with the presence of separable-phase organic solvents in the Hanford Site waste tanks. If ignited, burning organic solvents can liberate sufficient energy to release hazardous materials from the tanks. This analysis applies to single-shell tanks (SSTs), double-shell tanks (DSTs), and double-contained receiver tanks (DCRTs). The category of DSTs includes aging waste facility tanks. Both 100-series (530,000 gal and larger) and 200-series (55,000 gal) SSTs are included.

Analysis Strategy: An unknown number of waste tanks contain separable organic solvent phases. Not all tanks received solvents, and most of the solvents originally sent to the tanks have since evaporated or undergone chemical degradation to form organic species that would not be present as a separable, liquid phase. Tank 241-C-103 is, however, known to have an organic solvent layer floating on the waste surface. Other tanks have vapor space concentrations of organic solvent vapor higher than can be explained, except by the presence of liquid phase solvents somewhere in the waste.

A screening test has been developed that uses the results of the ongoing tank vapor space sampling program to predict the presence of significant quantities of separable phase solvents in tanks. The screening tests will identify whether or not specific tanks have any remaining separable organic solvent phase. The screening methodology uses vapor characterization data, in conjunction with an evaporation model, to estimate the size of solvent pools that feed vapors into tank headspaces. The screening test predicts whether or not a pool is present. If the screen predicts the presence of a pool, then another means of confirming or denying the presence of a pool must be found. If the screen predicts that a pool is not present, no further confirmation is required. The screening test and model are described in Appendix B of WHC-SD-WM-CN-032, *Analysis of Consequences of Postulated Solvent Fires in Hanford Site Waste Tanks*. When complete, the results of the screening program will identify specific tanks that may contain separate liquid phase organic solvents. To estimate overall risk to the tank farms for this analysis, however, six DSTs and nine SSTs were estimated to potentially contain separate liquid phase organic solvents. Both historical data on tank fill histories and the results from the tank vapor space sampling program for 65 SSTs were used for the estimate. Details on the method of estimation are given in Appendix C of WHC-SD-WM-CN-032.

Definition of Possible Scenarios: This analysis evaluates the frequency and consequences of the following three types of fires for combustion of organic solvent with headspace air.

- **Pool fires**—Pools are either a layer of solvent floating on top of liquid waste or a layer that is trapped in a depression on top of solid waste. In either instance, a pool has an area greater than 1 m^2 (10.8 ft^2). A pool may exist in DCRTs, DSTs, or SSTs.

- **Puddle fires**—Puddles are less than 1 m^2 (10.8 ft^2) in area and exist in a depression in a solid waste surface. Puddles should occur mainly in SSTs because many SSTs have a solid surface that can form a depression for solvent to collect in. However, a few DSTs have a floating crust (e.g., Tank 241-SY-101) that might form a depression where solvent could collect. Therefore, the analyses include puddles for both DSTs and SSTs.

- **Wick-Stabilized Fires**—A wick-stabilized fire configuration would be a sludge or salt cake that is permeated with solvent. The height of the solvent layer would be equal to the height of the solids level. The sludge or salt cake would act as a wick, and the solvent would burn. Wick-stabilized fires may occur in SSTs.

Pools and puddles are distinguished because the screening criteria can differentiate between puddles (smaller than 1 m^2 [10.8 ft^2) and pools (larger than 1 m^2 [10.8 ft^2]). An area of 1 m^2 (10.8 ft^2) is also a useful limit from a consequence point of view, because the burning of a puddle does not generate enough heat or pressure to produce any unmitigated release consequences that exceed risk guidelines.

The important distinctions between pool fires and wick-stabilized fires on salt cake or sludge are the rate of flame spread and ease of ignition. The wick-stabilized fire has a much lower flame spread rate and a higher probability of occurrence than pool fire.

Two other potential reactions involving organic solvent were considered for analysis: solvent reactions with organic-nitrate/nitrite salts and solvent vapors contributing to headspace flammability. Potential condensed phase reactions between organic-nitrate/nitrite salts are analyzed in Section 5.3.2.17 of this BIO. Laboratory tests described in Fauske 1995, *Summary of Laboratory Scoping Tests Related to Organic Solvents Combustion by Nitrate Oxidation and Organic Solvent Ignitability*, show that burning organic solvent can start a condensed phase organic-nitrate/nitrite reaction only if the necessary conditions for the organic-nitrate/nitrite reaction are already present. The organic solvent neither substitutes for the nitrate/nitrite fuel nor enhances the reaction, and the consequences of the organic-nitrate/nitrite reaction far exceed the consequences of a solvent fire.

Solvent vapors would significantly contribute only to headspace flammability (i.e., flammable vapor concentration greater than 25% of the lower flammability limit) given the following two conditions: (1) the tank contained a significant solvent pool (e.g., greater than 1 m^2 [10.8 ft^2] area) or an even larger solvent layer deeper in the waste solids, and (2) the solvent air interface temperature is above about 57 °C (134.6 °F) for fresh solvent or about 72 °C (161.6 °F) for degraded plutonium-uranium extraction solvent like that contained in Tank 241-C-103. Fresh solvent is not realistic for tank wastes but plutonium-uranium extraction solvent may be the most volatile solvent left in the waste tanks. Dunford (1996), *Modeling Solvent Low End Losses During Waste Storage*, demonstrates that higher volatility components have already evaporated from the tanks. Higher temperature tanks are less

likely to contain significant quantities of solvent vapors because the higher temperatures would have caused the more volatile components to evaporate over the many years of storage. The tanks with the higher heat loads have also been actively ventilated for many years. The cooler tanks may have allowed solvent to persist over the many years of storage and are sufficiently cool to limit vapor concentrations to small values as evidenced by sampling in Tanks 241-C-103 and 241-BY-108. Of the 65 tanks vapor sampled, the largest vapor contribution to headspace flammability is about 2% of the lower flammability limit. This result is from Tank 241-C-103, the only tank known to have a separable phase organic pool. On the basis of this evaluation and available headspace vapor sample data, the solvent contribution to headspace flammability can be reasonably assumed to be small. This assumption will be verified as additional tank headspaces are sampled.

Table 5.3.2.15-1 shows which organic solvent scenarios apply to each of the different types of tanks. As indicated by the table and the preceding discussion, accident analyses are only required for solvent pool fires in the three types of tanks, and for wick-stabilized fires in the SSTs.

Because neither the volume nor the particular configurations for organic solvent that may be present in these tanks is known, 18 parametric models were used to evaluate the different potential configurations and to establish the worst-case scenarios. Calculations for all 18 models are given in WHC-SD-WM-CN-032. Only the six bounding scenarios developed in the parametric models are included in this section. The cases are identified both by a letter designator and a descriptive title. The letter designator is taken from the spreadsheet used to calculate the consequences and is included in most tables in this section so that readers may cross-reference to the spreadsheet found in WHC-SD-WM-CN-032. The six cases are as follows.

1. Case Q represents the bounding radiological and toxicological accident for SST wick-stabilized fires.

2. Case G represents the bounding radiological accident for an SST fire.

3. Case H represents the bounding toxicological accident for an SST fire.

4. Case K represents the bounding radiological accident for a DST fire.

5. Case L represents the bounding toxicological accident for a DST fire.

6. Case P represents the bounding radiological and toxicological accident for a DCRT fire.

The bounding cases that maximized the pressure and vacuum did not result in the maximum releases. This was because, in part, of the fact that none of the tanks failed structurally. Therefore, these scenarios

were not further developed. The supporting structural calculations are found in WHC-SD-TWR-RPT-002, *Structural Integrity and Potential Failure Modes of the Hanford High-Level Waste Tanks*.

5.3.2.15.1 Accident Scenario Assuming No Controls.

Sequence of Events. An evaluation of potential initiators that applies to all cases examined, including results from testing laboratories, is given in WHC-SD-WM-CN-032. Lightning and vehicle fuel fires are the only initiators with sufficient energy to ignite solvent pool or puddle fires. A wick-stabilized fire, however, requires less energy to initiate and to maintain the necessary conditions for combustion. Thus, this type of fire may be initiated by lightning, vehicle fuel fires, and hot metal resulting from use of a cutting torch (but not by sparks or slag from welding).

Two other potential initiators exist but are not evaluated in this section as separate accidents: a flammable gas deflagration and an organic-nitrate/nitrite reaction. The consequences of a flammable gas deflagration (Section 5.3.2.14) are much greater than the consequences of a solvent fire. Likewise, the consequences of the organic-nitrate/nitrite reaction (Section 5.3.2.17) are much greater than the consequences of a solvent fire. Because the deflagration consequences would dominate the combined consequences of both accidents, neither a deflagration initiated solvent fire nor an organic-nitrate/nitrite initiated solvent fire is evaluated as a separate accident in this section.

Wick-Stabilized Solvent Fire in SST, Case Q. Solvent possibly could intrude into the underlying sludge or salt cake in an SST following salt well pumping of drainable liquids from a tank. Exposed salt cake saturated with solvent could burn like a candle using the sludge or salt cake as a wick. The burning surface would slowly increase and would eventually cover more of the tank surface than the puddle fire.

For a solvent liquid level equal to the solids level in the tank, the flame propagation rate would be approximately 0.1 cm/sec (WHC-SD-WM-CN-032). If the liquid level were below the solids level, however, ignition would not occur. The case of a solvent liquid level above the solids level is a pool or puddle fire and is addressed later.

The pressure, 30.3 kPa (4.4 psig) and vacuum -4.8 kPa (-0.7 psig) transients resulting from the fire are not large enough to damage the tank structure and create a pathway to the environment. Tank farms 241-SX and 241-C, however, have active ventilation systems and a path to the environment could be created through ruptured high-efficiency particulate air (HEPA) filters. Releases could also occur through risers that do not have covers bolted in place. Unbolted vent covers are assumed to lift at 7 kPa (1 psi), and then fall back into place, sealing the opening when the pressure is relieved. The quantity of solvent burned, 130 kg (286 lb), is limited by oxygen availability, and thus, the fire extinguishes on its own.

The frequency of the scenario assuming no controls on a facility basis is unlikely based on an evaluation of credible ignition sources.

Bounding Radiological SST Fire, Case G. In this scenario, a pool of solvent is postulated to burn on the waste surface of an actively ventilated SST. In this, and all pool scenarios, a pool is required to be 210 m^2 so that flame spread is not limited before the fire is extinguished by oxygen depletion. Unlimited flame spread produces the largest pressure transient.

A flame spread rate of 10 cm/s is used. An upper bound for flame spread rate was chosen after examining several sets of experimental data. One data set was based on experiments conducted on mixtures of tributyl phosphate (TBP) and normal paraffin hydrocarbons (NPH) similar to plutonium-uranium extraction solvent. These mixtures were burned in closed compartments. Flame spread rates varied from 1.3 to 3.3 cm/s. For data based on open air tests with jet fuel, flame spread rates ranged from 8 to 10 cm/s. Although the data for jet fuel may not apply directly to confined solvent fires, the tests provide an experimental basis for defining an upper bound of approximately 10 cm/s for flame spread rates in waste tanks.

The tank does not structurally fail and create a pathway to the environment as a result of either the pressure transient (200 kPa [29 psig]) or the vacuum transient (-0.7 kPa [-0.1 psig]). The high pressure is the result of the small vent path through the filter. See the overpressure assumption in Section 5.3.2.15.3, "Key Assumptions." Tank farms 241-SX and 241-C, however, have active ventilation systems and a path to the environment could be created through ruptured HEPA filters. Releases could also occur through any risers that do not have covers bolted to the flanges. The fire burns until the oxygen is depleted consuming 146 kg (321 lb) of solvent.

The frequency of the scenario assuming no controls on a facility basis is "unlikely" based on an evaluation of credible ignition sources.

Bounding Toxicological SST Fire, Case H. This scenario postulates a 210-m^2 (2,260-ft^2) pool of solvent burns on the waste surface in a passively ventilated SST.

The tank does not structurally fail as a result of either the pressure transient (12.4 kPa [1.8 psig]) or the vacuum transient (-46.9 kPa [-6.8 psig]). The low pressure is the result of the large vent path which includes risers. The pressure transient, however, ruptures the breather filter on the tank creating a release path to the environment through the ventilation system. Releases also could occur through any risers that do not have covers bolted to the flanges. The fire burns until the oxygen is depleted consuming 84 kg (185 lb) of solvent. The frequency of the scenario assuming no controls on a facility basis is "unlikely" based on an evaluation of credible ignition sources.

Bounding Radiological DST Fire, Case K. This scenario postulates that a puddle of solvent (1 m^2 [10.8 ft^2]) burns on top of the waste surface of an actively ventilated DST. This scenario yields the highest theoretical radiological consequences for a DST fire and provides the bounding consequences. However, this scenario is probably not physically possible because the surface of DST waste is expected to be a liquid, and the solvent probably would spread as far as possible over the surface of the waste instead of accumulating as a puddle.

The DST does not structurally fail as a result of either the pressure transient (6.2 kPa [0.9 psig]) or the vacuum transient (-0.69 kPa [-0.1 psig]). The pressure transient is assumed to rupture the HEPA filters on the ventilation system, creating a release path to the environment. Releases also could occur through any risers that do not have covers bolted to the flanges. The fire burns to until the oxygen is depleted consuming 132 kg (291 lb) of solvent. The frequency of the scenario assuming no controls on a facility basis is "unlikely" based on an evaluation of credible ignition sources.

Bounding Toxicological DST Fire, Case L. This scenario postulates that a pool of solvent (210 m^2 [2,260 ft^2]) burns on top of the waste surface of an actively ventilated DST.

The DST does not structurally fail as a result of either the pressure transient (13.8 kPa [2 psig]) or the vacuum-transient (-35.9 kPa [-5.2 psig]). However, the pressure transient is assumed to rupture the HEPA filters on the ventilation system, creating a release path to the environment. Releases also could occur through any risers that do not have covers bolted to the flanges. The fire burns until the oxygen is depleted consuming 92 kg (202 lb) of solvent. The frequency of the scenario assuming no controls on a facility basis is "unlikely" based on an evaluation of credible ignition sources.

Bounding Radiological and Toxicological DCRT Fire, Case P. The same scenario results in the bounding case for both toxicological and radiological consequences for a DCRT fire. In this scenario, a pool of solvent 34 m^2 (366 ft^2) is postulated to burn on top of the waste surface of a DCRT. This pool area is equal to the maximum waste surface area in the DCRT.

The DCRT does not structurally fail as a result of either the pressure transient (126 kPa [18.3 psig]) or the vacuum transient (-8.3 kPa [-1.2 psig]). The vaults surrounding the DCRTs have powered ventilation systems, with ducts to the DCRTs, but no identifiable ventilation inlets to the DCRTs. Therefore, the DCRT is modeled as having a passive ventilation system[1]. The pressure transient is assumed to rupture the HEPA filter on the vault ventilation system, creating a release path to the environment through the vault ventilation system. Releases also could occur through any risers that do not have covers bolted to the flanges. The fire burns until the oxygen is depleted consuming 2.12 kg (4.67 lb) of solvent. The frequency of the scenario assuming no controls on a facility basis is "unlikely" based on an evaluation of credible ignition sources.

Results Summary. Tables 5.3.2.15-2 and 5.3.2.15-3 present the accident consequences and the applicable risk guidelines for both onsite and offsite releases for organic solvent fires assuming no controls.

---

[1]The 244-U DCRT does have an air inlet on the tank. This DCRT has not had any radioactive material transferred through it. The 244-U DCRT will require additional information on ventilation flow to complete calculations for it. Since any accident involving a DCRT would have smaller consequences than an accident with an SST or DST, 244-U is bounded.

Implications of Results. The offsite consequences for all cases are below offsite risk guidelines. However, the onsite radiological consequences exceed the risk guidelines for cases G and Q by a small margin. The onsite toxicological consequences exceed the risk guidelines for cases H, L, P, and Q. Therefore, controls are required.

5.3.2.15.2 Accident Scenario Assuming Controls. As a result of the analysis assuming no controls, Technical Safety Requirement controls have been identified that eliminate two of the three possible initiators, vehicle fuel fires and flame cutting (Section 5.3.2.15.4, "Controls"). Controls have also been identified to reduce the likelihood of an organic solvent fire caused by a lightning strike. However, as discussed in Section 5.3.2.23, "Natural Phenomena," the ability of these controls to prevent an organic solvent fire is uncertain and unquantifiable.

Sequence of Events. The scenario assuming controls is postulated to be an organic solvent fire initiated by lightning, which has a frequency of 3×10^{-5} per year (4.5×10^{-4} on a facility basis). Thus, even with controls, the frequency for the accident remains "unlikely" (1×10^{-4} to 1×10^{-2} per year). The same sequence of events and conditions described for scenarios assuming no controls still apply.

Results Summary. The consequences of the accident scenarios assuming controls are the same as those for accidents with no controls. This is because the selected controls are preventive and as such do not mitigate consequences.

Implications of Results. The offsite consequences for all cases are below the radiological and toxicological risk guidelines. However, the onsite radiological consequences exceed the risk guidelines for cases G and Q by a small margin. Likewise, the onsite toxicological consequences exceed the risk guidelines for cases H, L, P, and Q. Although the guidelines are exceeded for some cases, existing measures provide reasonable assurance that operations can be conducted safely (see Chapter 7.0).

5.3.2.15.3 Key Assumptions.

Important to Accident Frequency. The following assumptions important to accident frequency have been made in the analysis of organic solvent fires:

- The frequencies for the bounding cases assuming no controls are summarized in Table 5.3.2.15-4. The probabilities are also converted from a per tank basis to a facility basis in the table. The column labeled "Number of tanks" is the number of DSTs and SSTs estimated to contain a separable organic solvent phase. All six existing DCRTs were assumed to contain a separable organic solvent phase.

  The frequencies for the bounding cases assuming controls may also be determined from Table 5.3.2.15-4. Accident frequency was calculated by taking the per-tank lightning frequency and multiplying by the number of tanks.

- Two approaches were used to estimate the number of tanks that contain a separate liquid phase of organic solvent:

  The first approach makes an assumption about the total number of tanks that may contain a separable phase, which is then used to predict the aggregate risk from an organic solvent fire for the facility (all tanks). Using historical records about tank transfers, and the results of the vapor space sampling program, nine SSTs and six DSTs were predicted to contain solvent. Because of a lack of information, all six DCRTs are assumed to potentially contain a separate phase. This approach does not identify which tanks may contain solvent. Table 5.3.2.15-4 shows that the number of DSTs that contain solvent can increase substantially without changing the total frequency (facility basis) category of the DSTs. However, an increase of one tank in the SST column would change the total frequency category for wick stabilized fires in SSTs from "unlikely" to "anticipated."

  The second approach uses results from the ongoing vapor space sampling program to identify which tanks actually contain a separable organic solvent phase. This approach is used to identify which tanks should have controls placed on them. As the vapor space sampling program continues and is completed, information about which and how many tanks contain solvent will supersede the assumption made about the total number of tanks in the first approach described above.

Important to Accident Consequences. The following assumptions are important to the calculation of accident consequences for organic solvent fires.

- **HEPA Filter Loading**—Filters are assumed to be changed when they have a maximum contact reading on the filter housing of 2 mSv (200 mrem) per hour. This information is used to calculate the quantity of material on the filter for the maximum release from a ruptured filter. The method and assumptions for calculating the material loading on the HEPA filters is given in WHC-SD-WM-CN-054, *Waste Tank Ventilation System Waste Material Accumulations*.

- **Vent Paths**—Vent paths were postulated at two extremes to evaluate possible cases. A minimal vent path was postulated to evaluate maximum pressure that could be generated by a pool fire. For SSTs, this minimal vent was based on the HEPA vent pipe, a path with an equivalent orifice size of 9.5 cm (3.75 in.). For DCRTs and DSTs, the minimal vent was zero, a conservative default value chosen because a reliable, realistic vent path size is not known. Using zero for maximum pressure cases in DCRTs and DSTs does not result in tank failure, so there is no need to refine the maximum pressure model further. A large vent path was postulated to evaluate maximum vacuum resulting from the cooldown of the tank after the fire extinguishes. A circular opening, 1.27 m (50 in.) in diameter covered by a hinged plate was assumed to open at a pressure

difference of 6.89 kPa (1 psi). This flapper valve was hypothesized to simulate the venting through large risers (in tank pits) that are covered by caps held in place by gravity.

- **Overpressure**—The maximum overpressure resulting from a solvent fire in a DST is calculated to be 30 psig (207 KPa). This pressure will not result in DST failure and is documented in LA-UR-92-3196, *Safety Assessment for Proposed Pump Mixing Operations to Mitigate Episodic Gas Releases in Tank 241-SY-101: Hanford Site, Richland, Washington.* The maximum overpressure calculated for the SST accident is 29 psig (200 kPa), given the SST structure does not fail. A structural analysis, WHC-SD-TWR-RPT-002, predicts that the concrete in the SST dome would crack at a failure pressure of 11 psig (76 kPa). As the dome cracks, more flow openings are created; hence the pressure is maintained constant at the tank failure pressure until all the solvent fire extinguishes because of lack of oxygen. The concrete would maintain adherence to the rebar and the dome would not collapse. The predicted cracking would allow the pressure to vent to the soil above the tank. The approximately 2.4 m (8 ft) of soil on top of the tanks would act as a filter and prevent a release to the atmosphere. Note that consequence calculations conservatively assume that all material is released via unfiltered vent paths.

5.3.2.15.4 Controls.

Safety Structures, Systems, and Components. No Safety-Class or Safety-Significant structures, systems, and components have been identified.

Technical Safety Requirement Controls. Four controls have been identified to reduce the probability of accidents (see Table 5.3.2.15-5). The tanks where these controls are applied are identified by number in Table 5.3.2.15-6.

Out of 177 DSTs and SSTs, 65 SSTs have been vapor space sampled. Forty-eight of the sampled tanks do not have a positive test for organic solvent. Seven of the sampled tanks have a positive test. The results for 10 tanks are inconclusive because ventilation flow information was not available. One hundred twelve of the tanks, including all of the DSTs, have not been vapor space sampled. The tanks that have not been vapor space sampled are assumed to potentially contain separate phase organic solvent, and will have the controls specified in this section applied. The 10 tanks with inconclusive results will have controls applied. The seven tanks that have shown a positive test when vapor space sampled will have the controls specified in this section applied. The 48 tanks that did not have a positive result when vapor space sampled will not have the controls specified in this section applied. All tanks that will have controls applied are identified by a "Yes" in Table 5.3.2.15-6.

Defense-in-Depth. Defense-in-Depth controls are identified in Table 5.3.2.15-7.

5.3.2.15.5 References

Dunford, G. L., 1996, *Modeling Solvent Low End Losses During Waste Storage* (external letter 9654311 to M. L. Cowen, Westinghouse Savannah River Company, September 23), Westinghouse Hanford Company, Richland, Washington.

Fauske, 1995, *Summary of Laboratory Scoping Tests Related to Organic Solvents Combustion by Nitrate Oxidation and Organic Solvent Ignitability*, Fauske & Associates, Inc., Chicago, Illinois.

HNF-SD-WM-CN-099, 1998, *Radiological and Toxicological Analyses of Tank 241-AY-102 and Tank 241-C-106 Ventilation Systems*, Rev. 1A, Fluor Daniel Northwest, Inc., Richland, Washington.

LA-UR-92-3196, 1995, *A Safety Assessment for Proposed Pump Mixing Operations to Mitigate Episodic Gas Releases in Tank 241-SY-101*: Hanford Site, Richland, Washington, Rev. 14, Los Alamos National Laboratory, Los Alamos, New Mexico.

WHC-SD-TWR-RPT-002, 1996, *Structural Integrity and Potential Failure Modes of the Hanford High-Level Waste Tanks*, Rev. 0, Westinghouse Hanford Company, Richland, Washington.

WHC-SD-WM-CN-032, 1996, *Analysis of Consequences of Postulated Solvent Fires in Hanford Site Waste Tanks*, Rev. 0-A, Westinghouse Hanford Company, Richland, Washington.

WHC-SD-WM-CN-054, 1996, *Waste Tank Ventilation System Waste Material Accumulations*, Rev. 0, Westinghouse Hanford Company, Richland, Washington.

Table 5.3.2.15-1. Organic Solvent Fire Accident Scenarios Applicable to Different Types of Tanks.

Scenario	Single-shell tanks	Double-shell tanks	Double-contained receiver tanks
Solvent pool fire	Yes	Yes	Yes
Wick-stabilized fire in salt cake or sludge	Yes	No	No
Condensed phase reaction between organic-nitrate/ nitrite salts	Solvent fire can initiate given all conditions for condensed phase reaction. Condensed phase reaction dominates (see Section 5.3.2.18)	No	No
Solvent vapors contribution to headspace flammability	Insignificant (less than 2% of lower flammability limit). Flammable gas accident dominates. See Section 5.3.2.14 on flammable gas deflagration	Insignificant same as single-shell tank	Insignificant same as single-shell tank

Table 5.3.2.15-2. Onsite Consequences of Organic Solvent Fire Scenarios Assuming No Controls and a Frequency of "Unlikely."

Case	Onsite dose		Risk guideline	
	Radiological, Sv (rem)	Toxicological, SOF	Radiological Sv (rem)	Toxicological, SOF
Bounding radiological SST fire, G	9.3 E-02 (9.3)*	N/A	0.05 (5)	N/A
Bounding toxicological SST fire, H	N/A	44.3* (ERPG-2)	N/A	1
Bounding radiological DST fire, K	2.38 E-02* (2.38)	N/A	0.05 (5)	N/A
Bounding toxicological DST fire, L	N/A	40.5* (ERPG-2)	N/A	1
Bounding radiological and toxicological DCRT fire, P	6.46 E-04 (6.46 E-02)	4.68 (ERPG-2)	0.05 (5)	1
Wick-stabilized fire in SST, Q, entrained	5.62 E-02 (5.62)	4.16 (ERPG-2)	0.05 (5)	1

DCRT = double-contained receiver tank.
DST = double-shell tank.
ERPG = Emergency Response Planning Guideline.
N/A = not applicable.
SOF = sum-of-fractions.
SST = single-shell tank.
Sv = sievert.

* Onsite consequences for organic solvent fire scenarios for cases G, H, K, and L are calculated in Attachment 6, HNF-SD-WM-CN-099, Radiological and Toxicological Analyses of Tank 241-AY-102 and Tank 241-C-106 Ventilation Systems, Rev. 1A, Fluor Daniel Northwest, Inc., Richland, Washington.

Table 5.3.2.15-3. Offsite Consequences of Organic Solvent Fire Scenarios Assuming No Controls and a Frequency of "Unlikely."

Case	Offsite dose		Risk guideline	
	Radiological, Sv (rem)	Toxicological, SOF	Radiological, Sv (rem)	Toxicological, SOF
Bounding radiological SST fire, G	8.2 E-05 (8.2 E-03)*	N/A	0.005 (0.5)	N/A
Bounding toxicological SST fire, H	N/A	2.8 E-01* (ERPG-1)	N/A	1
Bounding radiological DST fire, K	2.37 E-05 (2.37 E-03)*	N/A	0.005 (0.5)	N/A
Bounding toxicological DST fire, L	N/A	2.93 E-01* (ERPG-1)	N/A	1
Bounding radiological and toxicological DCRT fire, P	5.43 E-07 (5.43 E-05)	1.27 E-02 (ERPG-1)	0.005 (0.5)	1
Wick-stabilized fire in SST, Q	4.92 E-05 (4.92 E-03)	8.79 E-03 (ERPG-1)	0.005 (0.5)	1

DCRT = double-contained receiver tank.
DST = double-shell tank.
ERPG = Emergency Response Planning Guideline.
N/A = not applicable.
SOF = sum-of-fractions.
SST = single-shell tank.
Sv = sievert.

* Onsite consequences for organic solvent fire scenarios for cases G, H, K, and L are calculated in Attachment 6, HNF-SD-WM-CN-099, Radiological and Toxicological Analyses of Tank 241-AY-102 and Tank 241-C-106 Ventilation Systems, Rev. 1A, Fluor Daniel Northwest, Inc., Richland, Washington.

Table 5.3.5.15-4. Summary of Accident Frequencies for Organic Solvent Fires Assuming No Controls.

Unmitigated scenario	Frequency lightning (per tank)	Frequency vehicle fuel fire (per tank)	Frequency flame cutting (per tank)	Number of Tanks	Total Frequency (facility basis)
SST wick stabilized solvent fire	3.0 E-05	4.3 E-05	1.0 E-03	9	9.6 E-03
SST pool or puddle fire	3.0 E-05	4.3 E-05	N/A	9	6.6 E-04
DST pool or puddle fire	3.0 E-05	4.3 E-05	N/A	6	4.4 E-04
DCRT pool or puddle fire	3.0 E-05	4.3 E-05	N/A	6	3.7 E-04

DCRT = double-contained receiver tank.
DST = double-shell tank.
N/A = not applicable.
SST = single-shell tank.

Table 5.3.2.15-5. Technical Safety Requirement Controls for Organic Solvent Fires.

Control	Safety function	Comments
Ignition Control Program with the following key elements: 1. Rotary mode core sampling is permitted only per approved authorization basis 2. Vehicle access within the tank farms shall be limited to vehicles whose fuel systems are protected from damage caused by potential collisions with tank structures 3. Physical barriers shall restrict vehicle access to those aboveground structures outside of tank farm boundaries that can direct liquids into waste tanks. Only vehicles with protected fuel systems shall be allowed within barriers 4. Speed limit controls	1. Prevention of organic solvent fires initiated by rotary mode core sampling operations 2. Prevent vehicle fuel system damage in 3. the event of collisions with tank 4. structures within the tank farms. Outside the tank farms where vehicle access can not be controlled, prevent vehicle access to tank structures	None
Emergency Preparedness with the following key element: • Response procedures	Mitigate the consequences of a fire	None
If flame cutting is performed in a location where debris from the cutting could fall on the waste surface in a tank, a device that is capable of catching and holding hot metal debris from the cutting shall be inserted between the cutting operation and the waste surface. This does not apply to sparks or slag from welding	Pieces of hot metal from flame cutting may be capable of igniting salt cake or sludge that has entrained organic solvent in it	None
See the TSR control for lightning protection program (Section 5.3.2.23.2)	See lightning (Section 5.3.2.23.2)	None
Waste Transfer Control Program Key element: All waste transfers shall be evaluated to ensure that the waste transfer does not create an organic solvent hazard outside the BIO safety envelope	Ensure that waste transfers do not create an organic solvent hazard outside the safety envelope established by the BIO (i.e., prevent creation of a new tank with an organic solvent hazard unless the required organic solvent controls are extended to the tank)	None
HEPA Filter Control Program with the following key elements: 1. Periodic radiation survey to monitor HEPA filter loading 2. HEPA filter replacement per change-out criteria, i.e., $\leq$ 2 mSv/h (200 mrem/h)	Reduce consequences from a possible HEPA filter failure by limiting the inventory available	None

BIO = basis for interim operation.
HEPA = high-efficiency particulate air (filter).

Table 5.3.2.15-6. Organic Solvent Fire Topography. (5 sheets)

Tank	Organic solvent fire potential	Basis
Double-shell tanks		
AN-101	Yes	Not vapor space sampled
AN-102	Yes	Not vapor space sampled
AN-103	Yes	Not vapor space sampled
AN-104	Yes	Not vapor space sampled
AN-105	Yes	Not vapor space sampled
AN-106	Yes	Not vapor space sampled
AN-107	Yes	Not vapor space sampled
AP-101	Yes	Not vapor space sampled
AP-102	Yes	Not vapor space sampled
AP-103	Yes	Not vapor space sampled
AP-104	Yes	Not vapor space sampled
AP-105	Yes	Not vapor space sampled
AP-106	Yes	Not vapor space sampled
AP-107	Yes	Not vapor space sampled
AP-108	Yes	Not vapor space sampled
AW-101	Yes	Not vapor space sampled
AW-102	Yes	Not vapor space sampled
AW-103	Yes	Not vapor space sampled
AW-104	Yes	Not vapor space sampled
AW-105	Yes	Not vapor space sampled
AW-106	Yes	Not vapor space sampled
SY-101	Yes	Not vapor space sampled
SY-102	Yes	Not vapor space sampled
SY-103	Yes	Not vapor space sampled
Aging waste facility tanks		
AY-101	Yes	Not vapor space sampled
AY-102	Yes	Not vapor space sampled
AZ-101	Yes	Not vapor space sampled
AZ-102	Yes	Not vapor space sampled
Single-shell tanks		
A-101	No	Vapor space sampling
A-102	No	Vapor space sampling
A-103	No	Vapor space sampling
A-104	Yes	Not vapor space sampled
A-105	Yes	Not vapor space sampled
A-106	Yes	Not vapor space sampled
AX-101	No	Vapor space sampling
AX-102	No	Vapor space sampling
AX-103	No	Vapor space sampling
AX-104	Yes	Not vapor space sampled
B-101	Yes	Not vapor space sampled
B-102	Yes	Not vapor space sampled
B-103	No	Vapor space sampling

Table 5.3.2.15-6. Organic Solvent Fire Topography. (5 sheets)

Tank	Organic solvent fire potential	Basis
B-104	Yes	Not vapor space sampled
B-105	Yes	Not vapor space sampled
B-106	Yes	Not vapor space sampled
B-107	Yes	Not vapor space sampled
B-108	Yes	Not vapor space sampled
B-109	Yes	Not vapor space sampled
B-110	Yes	Not vapor space sampled
B-111	Yes	Not vapor space sampled
B-112	Yes	Not vapor space sampled
B-201	Yes	Not vapor space sampled
B-202	Yes	Not vapor space sampled
B-203	Yes	Not vapor space sampled
B-204	Yes	Not vapor space sampled
BX-101	Yes	Not vapor space sampled
BX-102	Yes	Not vapor space sampled
BX-103	Yes	Not vapor space sampled
BX-104	Yes	Vapor space sampling
BX-105	Yes	Not vapor space sampled
BX-106	Yes	Not vapor space sampled
BX-107	No	Vapor space sampling
BX-108	Yes	Not vapor space sampled
BX-109	Yes	Not vapor space sampled
BX-110	Yes	Not vapor space sampled
BX-111	Yes	Not vapor space sampled
BX-112	Yes	Not vapor space sampled
BY-101	Yes	Not vapor space sampled
BY-102	No	Vapor space sampling
BY-103	No	Vapor space sampling
BY-104	No	Vapor space sampling
BY-105	No	Vapor space sampling
BY-106	No	Vapor space sampling
BY-107	Yes	Vapor space sampling
BY-108	Yes	Vapor space sampling
BY-109	No	Vapor space sampling
BY-110	No	Vapor space sampling
BY-111	No	Vapor space sampling
BY-112	No	Vapor space sampling
C-101	Yes	Vapor space sampling
C-102	Yes	Vapor space sampling
C-103	Yes	Vapor space sampling organic solvent pool
C-104	Yes	Vapor space sampling inconclusive, lack of ventilation information
C-105	Yes	Vapor space sampling inconclusive, lack of ventilation information

Table 5.3.2.15-6. Organic Solvent Fire Topography. (5 sheets)

Tank	Organic solvent fire potential	Basis
C-106	Yes	Vapor space sampling inconclusive, lack of ventilation information
C-107	No	Vapor space sampling
C-108	No	Vapor space sampling
C-109	No	Vapor space sampling
C-110	No	Vapor space sampling
C-111	No	Vapor space sampling
C-112	No	Vapor space sampling
C-201	Yes	Not vapor space sampled
C-202	Yes	Not vapor space sampled
C-203	Yes	Not vapor space sampled
C-204	Yes	Not vapor space sampled
S-101	Yes	Not vapor space sampled
S-102	No	Vapor space sampling
S-103	Yes	Not vapor space sampled
S-104	Yes	Not vapor space sampled
S-105	No	Vapor space sampling
S-106	Yes	Not vapor space sampled
S-107	Yes	Not vapor space sampled
S-108	No	Vapor space sampling
S-109	Yes	Not vapor space sampled
S-110	No	Vapor space sampling
S-111	No	Vapor space sampling
S-112	No	Vapor space sampling
SX-101	Yes	Vapor space sampling inconclusive, lack of ventilation information
SX-102	Yes	Vapor space sampling inconclusive, lack of ventilation information
SX-103	Yes	Vapor space sampling inconclusive, lack of ventilation information
SX-104	Yes	Vapor space sampling inconclusive, lack of ventilation information
SX-105	Yes	Vapor space sampling inconclusive, lack of ventilation information
SX-106	Yes	Vapor space sampling inconclusive, lack of ventilation information
SX-107	Yes	Not vapor space sampled
SX-108	Yes	Not vapor space sampled
SX-109	Yes	Vapor space sampling inconclusive, lack of ventilation information
SX-110	Yes	Not vapor space sampled
SX-111	Yes	Not vapor space sampled
SX-112	Yes	Not vapor space sampled
SX-113	Yes	Not vapor space sampled
SX-114	Yes	Not vapor space sampled
SX-115	Yes	Not vapor space sampled
T-101	Yes	Not vapor space sampled

Table 5.3.2.15-6. Organic Solvent Fire Topography. (5 sheets)

Tank	Organic solvent fire potential	Basis
T-102	Yes	Not vapor space sampled
T-103	Yes	Not vapor space sampled
T-104	No	Vapor space sampling
T-105	Yes	Not vapor space sampled
T-106	Yes	Not vapor space sampled
T-107	No	Vapor space sampling
T-108	Yes	Not vapor space sampled
T-109	Yes	Not vapor space sampled
T-110	No	Vapor space sampling
T-111	No	Vapor space sampling
T-112	Yes	Not vapor space sampled
T-201	Yes	Not vapor space sampled
T-202	Yes	Not vapor space sampled
T-203	Yes	Not vapor space sampled
T-204	Yes	Not vapor space sampled
TX-101	Yes	Not vapor space sampled
TX-102	Yes	Not vapor space sampled
TX-103	Yes	Not vapor space sampled
TX-104	Yes	Not vapor space sampled
TX-105	No	Vapor space sampling
TX-106	Yes	Not vapor space sampled
TX-107	Yes	Not vapor space sampled
TX-108	Yes	Not vapor space sampled
TX-109	Yes	Not vapor space sampled
TX-110	Yes	Not vapor space sampled
TX-111	No	Vapor space sampling
TX-112	Yes	Not vapor space sampled
TX-113	Yes	Not vapor space sampled
TX-114	Yes	Not vapor space sampled
TX-115	Yes	Not vapor space sampled
TX-116	Yes	Not vapor space sampled
TX-117	Yes	Not vapor space sampled
TX-118	No	Vapor space sampling
TY-101	No	Vapor space sampling
TY-102	No	Vapor space sampling
TY-103	Yes	Vapor space sampling
TY-104	No	Vapor space sampling
TY-105	Yes	Not vapor space sampled
TY-106	Yes	Not vapor space sampled
U-101	Yes	Not vapor space sampled
U-102	Yes	Not vapor space sampled
U-103	No	Vapor space sampling
U-104	Yes	Not vapor space sampled
U-105	No	Vapor space sampling

Table 5.3.2.15-6. Organic Solvent Fire Topography. (5 sheets)

Tank	Organic solvent fire potential	Basis
U-106	No	Vapor space sampling
U-107	No	Vapor space sampling
U-108	No	Vapor space sampling
U-109	No	Vapor space sampling
U-110	Yes	Not vapor space sampled
U-111	No	Vapor space sampling
U-112	Yes	Not vapor space sampled
U-201	Yes	Not vapor space sampled
U-202	Yes	Not vapor space sampled
U-203	No	Vapor space sampling
U-204	No	Vapor space sampling
Double-contained receiver tanks		
244-A	Yes	Not vapor space sampled
244-BX	Yes	Not vapor space sampled
244-CR	Yes	Not vapor space sampled
244-S	Yes	Not vapor space sampled
244-TX	Yes	Not vapor space sampled
244-U	Yes	Not vapor space sampled
241-A-350	Yes	Not vapor space sampled
Catch tanks		
241-S-304	Yes	Not vapor space sampled
241-TX-302-B	Yes	Not vapor space sampled
241-TX-302-C	Yes	Not vapor space sampled
241-U-302-A	Yes	Not vapor space sampled
241-UX-302-A	Yes	Not vapor space sampled
241-A-417	Yes	Not vapor space sampled
241-AX-152	Yes	Not vapor space sampled
241-AZ-151	Yes	Not vapor space sampled
241-AZ-154	Yes	Not vapor space sampled
241-ER-311	Yes	Not vapor space sampled
241-EW-151	Yes	Not vapor space sampled
Miscellaneous inactive storage facilities	Yes	Not vapor space sampled

Table 5.3.2.15-7. Defense-in-Depth Controls for Toxic Vapor Nitrate Fires.

Control	Safety function	Comments
Vehicle positioning spotters	Spotters provide additional level of control in positioning cranes/vehicles	Reduces probability of analyzed accident
Tank farm fences	Provide line of demarcation within which Ignition Control Program key elements related to vehicle fuel systems must be met	Fence gates are typically closed and locked
HEPA filter replacement typically performed at 1 mSv/h (100 mrem/h)	Limits inventory available for release, limits dose rate to workers in vicinity of the filters	None

HEPA = high-efficiency particulate air (filter).

This page intentionally left blank.

5.3.2.16 In-Tank Fuel Fire/Deflagration.

Purpose of Analysis: Risks associated with accidents in which vehicles collide with tank risers and puncture the vehicle fuel tanks are evaluated in this section. Diesel and gasoline powered vehicles routinely enter the tank farms to support surveillance, sampling, maintenance, and construction activities. As identified in the hazards analysis, fuel from a ruptured vehicle fuel tank could spill into a waste storage tank through the damaged tank riser and ignite.

Analysis Strategy: In assessing the results of fuel spills from vehicles, two possible scenarios are considered. The first scenario is a pool fire in which the vehicle fuel burns on the surface of the waste and the second is a headspace deflagration in which vaporized fuel causes the headspace volume to reach the lower flammability limit (LFL) and the headspace is then ignited. The difference between the two scenarios is thus the physical state of the fuel when ignition occurs.

The frequency and consequences for both of these accident scenarios are bounded by the frequency and consequences for the "Organic Solvent Fire," Section 5.3.2.15, and "Flammable Gas Deflagration," Section 5.3.2.14. The scope of the analysis includes double-contained receiver tank (DCRTs), double-shell tanks (DSTs), DST annuli, single-shell tank (SSTs), catch tanks, and miscellaneous interim storage facilities (MISFs). The category of SSTs includes both 100 Series (2 million L or 500,000 gal and larger) and 200 Series (208,000 L or 55,000 gal) 100 Series tanks. The category of DSTs also includes aging waste facility tanks.

5.3.2.16.1 Accident Scenarios Assuming No Controls. Both scenarios assuming no controls are initiated by an errant vehicle that shears off one or more tank risers and ruptures the vehicle fuel tank. The maximum amount of vehicle fuel available in an accident is 227 L (60 gal) (the capacity of the largest fuel tank on any vehicle that enters the tank farms). Some spilled fuel enters the waste tank through the damaged riser and some vaporizes or is aerosolized as the fuel drains into the tank. The remaining portion of the fuel pools on the waste surface.

For both accident scenarios assuming no controls, the frequency category assigned is "unlikely" (10^{-4} to 10^{-2} per year). The frequencies are calculated in WHC-SD-WM-CN-037, *Frequency Analysis of Vehicle Fuel Release Resulting in Waste Tank Fire*.

Sequence of Events - Vehicle Fuel Pool Fire in Waste Tank. The primary assumption for this scenario is that some of the spilled vehicle fuel enters the waste tank but is not immediately ignited. Instead, the fuel pools on the surface of the waste and vaporizes. However, the fuel is ignited before the LFL is reached in the headspace and a pool fire therefore results. This scenario is similar to the organic solvent fire scenario (Section 5.3.2.15) in terms of the amount of fuel burned.

- **Single-Shell Tanks**—For SSTs, this accident scenario would be bounded by the analysis for SSTs given in Section 5.3.2.15. The maximum amount of fuel that would burn in an SST before oxygen extinguishment would be approximately 193 L (51 gal)

(WHC-SD-WM-CN-059, *Calculation Notes That Support Accident Scenario and Consequence Determination of the In-Tank Fuel Fire/ Deflagration*). The energy content and release rate would be about the same for the 193 L (51 gal) as for the maximum amount of solvent that burns in an SST. Therefore, the pressures, vacuums, and release rates generated by the fire would be equivalent to those generated by the organic solvent pool fire accident. Release paths to the environment would be through the ruptured filters on the ventilation system. The tank structure would not fail.

- **Double-Shell Tanks**—For DSTs, this accident scenario would be bounded by the analysis for DSTs given in Section 5.3.2.15. Using the same methodology given in WHC-SD-WM-CN-059 for calculating the equivalent quantity of fuel, the maximum amount of fuel that would burn in a DST before oxygen extinguishment would be about 174 L (46 gal) (WHC-SD-WM-CN-059). The energy content and release rate would be about the same for the 174 L (46 gal) of fuel as for the maximum amount of solvent that burns in a DST. Therefore, the pressures, vacuums, and release rates generated by the fire would be equivalent to those generated by the organic solvent pool fire accident. Release paths to the environment would be through the ruptured filters on the ventilation system. The tank structure would not fail.

- **Double-Shell Tank Annuli**—No calculations were specifically performed for the occurrence of this accident scenario in a DST annulus. This accident scenario would be bounded by the DST analysis in Section 5.3.2.15. A fire would not generate enough pressure to cause the tank to fail. None of the DSTs is known to have leaked; therefore, no waste should be present inside the annulus to contribute to a radiological or toxicological dose. Even if a leak had occurred, the waste would be the same as the waste inside the tank, which was used to calculate consequences for a DST fire. For the same reason, neither the radiological nor toxicological loading of the annulus ventilation system filters would be greater than the loadings for the main tank ventilation system. The contribution of the filters on the main ventilation system is given in Section 5.3.2.15.

- **Double-Contained Receiver Tank**—For DCRTs, this accident scenario would be bounded by the analysis for DCRTs given in Section 5.3.2.15. Using the same methodology given in WHC-SD-WM-CN-059 for calculating the equivalent quantity of fuel, the maximum amount of fuel that would burn in a DCRT before oxygen extinguishment would be about 4 L (1 gal). The energy content and release rate would be about the same for the 4 L (1 gal) of fuel as for the maximum amount of solvent that burns in a DCRT. Therefore, the pressures, vacuums, and release rates generated by the fire would be equivalent to those generated by the organic solvent pool fire. Release paths to the environment would be through the ruptured filters on the ventilation system. The tank structure would not fail.

- **Catch Tanks and MISFs**—No calculations were specifically performed for catch tanks and MISFs. Therefore, whether a pool fire in one of these tanks would cause failure of the tank is unknown. Both types of tanks are of various shapes and sizes, and information about the contents of these tanks is incomplete, but the quantity of waste in the tanks is minuscule compared with the quantity in the large tanks. Most of the waste in these tanks is left over from transfers and processing of the waste in the large tanks. Therefore, it is reasonable to assume that the concentrations of material available for release are no larger than those in the large tanks. Stating on an a-priori basis that this accident would always be bounded by the solvent pool fire accident described in Section 5.3.2.15 is not possible. However, because the quantity of material available for release is smaller and the concentrations of material are no larger, it is reasonable to assume that the consequences of an accident would be bounded by a deflagration as described in Section 5.3.2.14 for SSTs.

Sequence of Events - Vehicle Fuel Deflagration in the Headspace. The primary assumption for this scenario is that some of the spilled fuel enters the waste tank but is not immediately ignited. Instead, the fuel pools on the surface of the waste and begins to vaporize. The LFL is reached and the vaporized fuel ignites in the headspace. This scenario is similar to the flammable gas deflagrations scenarios (Section 5.3.2.14) in terms of the total energy available for combustion and in tank pressures reached during the burn.

The peak pressure from a gasoline (or diesel) burn is approximately equivalent to the peak pressure of a hydrogen burn. This statement is based on information about closed vessel deflagrations in NFPA 1988, *The SFPE Handbook of Fire Protection Engineering*, which relates peak pressure to flame temperatures. More details are provided in WHC-SD-WM-CN-059. The burning velocity of hydrogen is about eight times greater than that of either diesel oil or gasoline. The heats of combustion for both gasoline and diesel fuel are similar (48.1 MJ/kg and 47.5 MJ/kg) (Lewis and Von Elbe, *Combustion, Flames and Explosions of Gases*).

- **Single-Shell Tanks**—Because transfers to SSTs are not allowed, the existing volume of waste in each SST will not increase. The quantity of fuel required to reach the LFL was calculated for each SST by using published waste volumes (WHC-EP-0182-90, *Waste Tank Summary Report for Month Ending September 1995*). The results are given in WHC-SD-WM-CN-059. In 115 SSTs, the headspace could reach the LFL with 227 L (60 gal) or less of diesel or gasoline fuel present. Ignition of the vapor at the LFL could result in failure of the tank structure. The failure mechanism is described in Section 5.3.2.14.

- **Double-Shell Tanks**—The volume of waste in DSTs could either increase or decrease. The LFL can be reached in a full DST (1,057 cm or 416 in. of waste) with 62 L (16.3 gal) of fuel present. A tank containing approximately 411 cm (162 in.) of waste can reach the LFL with 227 L (60 gal) of fuel present. If a tank contains less than 411 cm (162 in.) of waste, the LFL cannot be reached because of the

maximum fuel assumption of 227 L (60 gal). Ignition of the vapor at the LFL could result in failure of the tank structure. The failure mechanism is described in Section 5.3.2.14.

- **Double-Shell Tank Annuli**—The LFL can be reached in the annulus of a DST with 37 L (9.9 gal) of fuel present. The annuli of DSTs are assumed to be empty; therefore, the volume of fuel needed to reach the LFL does not depend on waste volume in the annulus. Because ignition of the vapor at the LFL inside a tank can result in failure of the tank structure, a deflagration in the annulus is assumed to also cause failure of the tank structure. The failure mechanism would be similar to and bounded by that described in Section 5.3.2.14.

- **200 Series Tanks, Double-Contained Receiver Tanks, Catch Tanks, and MISFs**—A 200 Series tank is a SST with a volume of 208,000 L (55,000 gal). DCRTs, catch tanks, and MISFs all have significantly smaller volumes. The LFL could be reached in an empty 200 Series tank with approximately 15 L (3.7 gal) of fuel present. On the basis of this number, it can be assumed that the LFL could be reached in a DCRT, MISF, or catch tank with very little fuel present. No calculations were specifically performed for catch tanks and MISFs. Therefore, whether a deflagration in one of these tanks would cause failure of the tank is not definitely known.

  The tanks are of various shapes and sizes and information about the contents of the tanks is incomplete, but the quantity of waste in these tanks is minuscule compared with the quantity in the large tanks. Most of the waste in these tanks is left over from transfers and processing of the waste in the large tanks. Therefore, it is reasonable to assume that the concentrations of material available for release are no larger than those in the large tanks. Because the quantity of material available for release is smaller and the concentrations of material are no larger, it is reasonable to assume that the consequences of an accident would be bounded by a deflagration as described in Section 5.3.2.14.

Results Summary. The radiological and toxicological consequences for the vehicle fuel pool fire accident scenarios, except for MISFs and catch tanks, are bounded by the cases from Section 5.3.2.15 as listed in Table 5.3.2.16-1.

The radiological and toxicological consequences for a vehicle fuel pool fire in a MISF or catch tank are bounded by the SST flammable gas deflagration accident scenario described in corresponding Section 5.3.2.14.

The consequences for the vehicle fuel/deflagration accident scenario are bounded by the consequences of the DST and SST flammable gas deflagrations given in corresponding Section 5.3.2.14.

Implications of Results. Controls are required because onsite and offsite risk guidelines are exceeded. Specifically, for pool fire "Case G" (from Table 5.3.2.16-1) the onsite radiological consequences exceed

guidelines. For all pool fire cases, the onsite toxicological consequences exceed guidelines. For fuel deflagrations, both the onsite and offsite radiological and toxicological consequences exceed guidelines.

5.3.2.16.2 Accident Scenarios Assuming Controls. The controls specified in Section 5.3.2.16.4, "Controls" prevent the accident by protecting the vehicle fuel tanks from being punctured. A collision may occur, but without a punctured fuel tank, no fuel is released and the accident scenarios cannot occur. Therefore, scenarios assuming controls have not been developed.

5.3.2.16.3 Key Accident Scenario Assumptions.

Important to Accident Frequency. To determine the frequency of the scenarios assuming no controls (i.e., "unlikely" [1×10^{-4} to 1×10^{-2} per year]), the number of vehicle entries per year was assumed to be 520 per year for DSTs and 1,040 per year for SSTs. However, because the controls identified are preventive in nature, the number of vehicle entries per year is not a critical parameter.

Important to Accident Consequences. The following key assumptions are important to the accident consequences.

- The source term for the vehicle fuel pool fire is the same as the source term defined for the organic solvent pool fire in Section 5.3.2.15.
- The source term for the vehicle fuel fire deflagration is the same as defined for DSTs and SSTs in Section 5.3.2.14.
- The largest amount of fuel available to flow into a tank is 227 L (60 gal). This maximum amount applies to both the vehicle fuel pool fire and the vehicle fuel fire deflagration.
- The ventilation model described in Section 5.3.2.15 applies to the vehicle fuel pool fire.
- The structural criteria documented in WHC-SD-TWR-RPT-002, *Structural Integrity and Potential Failure Modes of the Hanford High-Level Waste Tanks*, apply to the vehicle fuel pool fire.

5.3.2.16.4 Controls.

Safety Structures, Systems, and Components. No Safety-Class or Safety-Significant structures, systems, and components have been identified.

Technical Safety Requirement Controls. The Technical Safety Requirement controls shown in Table 5.3.2.16-2 are applicable to all the DCRTs, DSTs (including annuli), SSTs (100 and 200 Series), catch tanks, and MISFs. A vehicle fuel fire deflagration could not occur in all SSTs. However, the vehicle fuel pool fire could occur in all tanks. Because the controls apply to both accident scenarios, the controls must be imposed on all tanks.

Defense-in-Depth. Controls that provide Defense-in-Depth are shown in Table 5.3.2.16-3.

5.3.2.16.5 References.

Lewis, B., and G. Von Elbe, 1987, *Combustion, Flames and Explosions of Gases*, Third Edition, Academic Press, Inc., New York, New York.

NFPA, 1988, *The SFPE Handbook of Fire Protection Engineering*, National Fire Protection Association, Quincy, Massachusetts.

WHC-EP-0182-90, 1995, *Waste Tank Summary Report for Month Ending September 1995*, Westinghouse Hanford Company, Richland, Washington.

WHC-SD-TWR-RPT-002, 1996, *Structural Integrity and Potential Failure Modes of the Hanford High-Level Waste Tanks*, Rev. 0, Westinghouse Hanford Company, Richland, Washington.

WHC-SD-WM-CN-037, 1996, *Frequency Analysis of Vehicle Fuel Release Resulting in Waste Tank Fire*, Rev. 0, Westinghouse Hanford Company, Richland, Washington.

WHC-SD-WM-CN-059, 1996, *Calculation Notes That Support Accident Scenario and Consequence Determination of the In-Tank Fuel Fire/Deflagration*, Rev. 1, Westinghouse Hanford Company, Richland, Washington.

Table 5.3.2.16-1. Unmitigated Consequences of Vehicle Fuel Pool Fire.

Scenario	Radiological (Section 5.3.2.15.1)	Toxicological (Section 5.3.2.15.1)
Single-shell tank	Case G	Case H
Double-shell tank and double-shell tank annulus	Case K	Case L
Double-contained receiver tank	Case P	Case P

Table 5.3.2.16-2. Technical Safety Requirement Controls for Vehicle Fuel Fire/Deflagration.

Control	Safety function	Comments
Ignition Control Program with the following key elements: 1. Vehicle access within the tank farms shall be limited to vehicles whose fuel systems are protected from damage caused by potential collisions with tank structures 2. Physical barriers shall restrict vehicle access to those above-ground structures outside of tank farm boundaries that can direct liquids into waste tanks. Only vehicles with protected fuel systems shall be allowed within barriers 3. Speed limit controls	Prevent vehicle fuel system damage (i.e., fuel system leaks) in the event of collisions with tank structures within the tank farms. Outside the tank farms where vehicle access can not be controlled, prevent vehicle access to tank structures	None
Emergency Preparedness with the following key element: • Response procedures	Mitigate the consequences of a fire	None

Table 5.3.2.16-3. Defense-in-Depth Controls of Vehicle Fuel Fire/Deflagration.

Control	Safety function	Comments
Vehicle positioning spotters	Spotters provide additional level of control in positioning cranes/vehicles	Reduces probability of analyzed accident
Tank farm fences	Provide line of demarcation within which Ignition Control Program key elements related to vehicle fuel systems must be met	Fence gates are typically closed and locked

5.3.2.17 Organic Salt-Nitrate Reaction.

Purpose of Analysis: The purpose of this analysis is to discuss the hazards and associated controls which are related to exothermic chemical reactions between organic chemicals contained within the wastes and oxidizers such as sodium nitrate and sodium nitrite which are also contained within the waste.

During the defense mission at the Hanford Site, organic complexants were used during fuel reprocessing, metal recovery operations, and waste management separations. These materials were discharged to the tanks where they mixed with sodium hydroxide, sodium nitrate and nitrite, and other inorganic diluents already present in the tanks. Organic complexants will react with oxidizing materials, such as nitrates or nitrites. This reaction can be accelerated to a rapid combustion by heating to high temperatures (above 220 °C [428 °F]) or by an initiator of sufficient energy.

The principal organic complexants sent to the tanks are glycolic acid, citric acid, HEDTA (hydroxyethylethylenediaminetriacetic acid), and EDTA (ethylenediaminetetraacetic acid). These compounds have been used in metric ton quantities at the Hanford Site. In addition to these complexants, other complexants such as NTA (nitrilotriacetic acid), di (2-ethylhexyl) phosphoric acid, and oxalic acid were also used, but the amounts of these complexants were relatively small and are not well quantified.

The organic complexants were sent to the tank as solutes in waste liquids and posed no hazard. However, since that time, several operations and naturally occurring physical and chemical processes have occurred that affect this hazard (both adversely and beneficially). The most important are blending, with wastes that were low in organic content evaporator concentration and crystallization, settling, draining of waste liquids (in some single-shell tanks [SSTs]) and surface evaporation drying as well as chemical degradation (aging). The effect of these processes on the organic-nitrate hazard has not been fully quantified because of a lack of understanding of the effects of these processes and a lack of data concerning the actual waste conditions. Because the hazard posed is uncertain and not fully analyzed, the potential organic-nitrate hazard is the subject of an Unreviewed Safety Question which is described in determination TF-96-0096, *Condensed-Phase Organic Nitrate Reactions*. The Unreviewed Safety Question applies to all tanks, including double-contained receiver tanks.

Analysis Strategy: The following steps outline the analysis approach for this hazard. Details of the analysis are contained in WHC-SD-WM-CN-058, *Compilation of Calculation Notes in Support of Organic Salt-Nitrate Reactions Safety Analysis*.

1. The species of organic salts that might be present in the wastes were determined based on historical records of organic chemicals originally disposed to the tanks, and theoretical study and experiments of subsequent chemical degradation of these chemicals.

2. Hanford Site tank wastes stored in SSTs have been assessed for chemical runaway using techniques used in the chemical processing industry. The assessment concluded that conditions leading to a chemical runaway in the passively ventilated tanks are not realistic and are assigned to be beyond extremely unlikely in this analysis. In addition, spontaneous runaway of the wastes stored in actively ventilated SSTs is not realistic while ventilation is maintained. Ventilation is required for these tanks to address flammable gas hazards (Section 5.3.2.14). The heat up rate following a loss of ventilation in actively ventilated tanks (i.e., some SSTs, all double-shell tanks [DSTs], and all Aging Waste Facility [AWF] tanks are actively ventilated) has been calculated and experienced for several tanks (e.g., 241-C-106) and is very slow. Heat up to high temperatures is therefore controlled by temperature monitoring and response actions.

   The threshold temperature for significant chemical heating is not known exactly. The waste temperature in tanks is required to be $\leq$ 121 °C (250 °F) to prevent a chemical runaway reaction. This limit is conservatively selected based upon the lowest observed chemical heating of waste surrogates occurring at 150 °C (302 °F). Maintaining the waste at or below steam saturation temperatures will prevent both tank bumps and chemical runaways. The Limiting Condition for Operation temperature limit for SSTs, DSTs, and AWF tanks to prevent tanks bumps (Section 5.3.2.22, "Tank Bump") will conservatively also prevent a chemical runaway. Therefore, temperature monitoring and response actions which are required for these tanks to address tank bump hazards also prevent potential chemical runaway events.

3. Key parameters and lower limits for condensed-phase-propagating-combustion chemical reactions were determined through theoretical analysis and testing of waste surrogates. A range of waste surrogates were tested for reaction characteristics. These surrogates were composed of sodium nitrate and various organic chemicals representative of those used in the process facilities and their expected degradation products. A key conclusion from this testing is that semi-volatile process extractants and solvents (e.g., tributyl phosphate and normal paraffin hydrocarbon) and their principal degradation products (e.g., sodium dibutyl phosphate) do not support propagating combustion reactions.

   The combustion assessment therefore focused on the analysis of the organic complexants and their degradation products. The effort has resulted in fuel, moisture, and temperature limits used to judge the combustibility of the waste and the frequency of ignition. Total organic carbon (TOC) is not a direct measure of combustibility; however, it is the primary available data regarding the organic

content of the waste, and its use in this analysis is conservative. The conservative combustion criterion developed from theory and test results is:

$$\text{wt\% TOC} \geq 4.5 + 17\,X_w$$

Where: wt% TOC is the total organic carbon in the waste calculated as the energy equivalent of sodium acetate and

X_w is the weight fraction of moisture in the waste, up to 0.20. Above 0.20 (20 wt% water) the relationship no longer holds because the mixture becomes liquid continuous. A stoichiometric fuel-oxidizer mixture will not support propagating combustion when moisture exceeds 20 wt%.

A key conclusion is that wastes that contain more than 20 wt% water pose no hazard from propagating combustion reactions. Additionally, waste with low fuel content (less than 4.5 wt% TOC from energetic organic species) also poses no risk from propagating combustion events.

4. Wastes that are stored with a supernatant liquid above the waste solids pose no hazard based on the conclusion of step 3 above. Therefore, the analysis was focused on SSTs with a waste management strategy that removed waste supernate and as much drainable, interstitial liquid as practical to limit environmental contamination from tank leaks.

5. The likelihood and extent of combustible waste being present in the tank farms was assessed based on a review of waste process history and the evaluation of available waste sample data. The assessment of waste processing history (LA-UR-96-989, *History of Organic Carbon in Hanford High Level Waste Tanks: HDW Model*) concluded that waste with high complexant concentrations would be expected in at most only a small fraction of the tanks, those with unique process histories which included the receipt and storage of complexant bearing wastes that did not experience:

   - Waste blending which mixed soluble sodium and aluminum into the organic waste and thus limited the amount of concentration that could occur for the blend.
   - Chemical degradation that would have occurred during high temperatures experienced in the high temperature evaporator campaigns (242-T Evaporator).
   - Significant chemical degradation (aging) during the many years of storage in the tanks.

   In addition, these wastes would need to dry out through evaporation to attain combustible concentrations and conditions.

The physical processes required to concentrate and dry waste to combustible conditions have not been quantitatively evaluated for this safety analysis because of uncertainties in waste processing histories and the phenomena themselves. Rather, historical records and the limited waste sample information regarding fuel, moisture, and temperature have been evaluated to estimate the extent of the hazard in each tank. Analysis of variance techniques were used to evaluate the uncertainty in these estimates. This evaluation indicated a significant variability in the waste conditions within a tank and from tank to tank. Additionally, the evaluation determined that a large uncertainty exists regarding the actual hazard posed by the wastes. Hence, the presence or absolute absence of combustible waste can not be determined explicitly. Each tank waste contains a distribution of organic complexants and moisture, and if statistical techniques are used to extrapolate waste condition estimates to high confidence limits, there is a small probability that some fraction of waste exceeds the combustion criterion. Estimating the amount of combustible waste in each tank in this manner was judged imprudent for estimating risk and assigning controls on a tank-by-tank basis. Rather, these insights, as well as historical waste processing records and available waste sample calorimetry, were used to group the tanks. The estimated hazard posed by organic-nitrates varies significantly and therefore, controls were graded on the basis of these tank groupings. The tank groupings were termed *safe*, *conditionally safe*, and *unsafe*.

Safe—Tanks were placed in the SAFE group if

(1) waste samples were available and showed that TOC was less than 4.5 wt% on a dry basis at the 95 percentile with a 95% confidence, or

(2) waste process histories (Agnew 1996) showed that these tanks received minimal or no organic material and differential scanning calorimetry of waste samples corroborated that the waste had no exothermic energy.

The moisture of the waste was not considered: even if these wastes were dried out, insufficient fuel is present to be combustible. Tanks placed into this category are listed in Table 5.3.2.17-1.

Conditionally Safe—Tanks were placed in the CONDITIONALLY SAFE group if they were judged to pose a small risk when waste moisture was considered, but judged to pose a risk if the wastes were dried out. Tanks placed into this group are listed in Table 5.3.2.17-1. Physical processes that could exacerbate the hazard in CONDITIONALLY SAFE or unsampled tanks, such as drying the wastes, were evaluated to determine if restrictions on operations were warranted until the true hazard is better understood.

Unsafe—Tanks would be placed into the UNSAFE group if they were judged to pose a significant risk regardless of associated moisture content under current conditions. No tanks have been placed in the UNSAFE group.

Note that 82 SSTs have been judged to have insufficient sample data available to categorize them into one of the preceding groups.

6. Conditions for initiating propagating combustion accidents were studied theoretically and through testing of waste surrogates. Theory holds that for a dry (zero total water) stoichiometric mixture of organic fuel and oxidizer, the minimum ignition energy is 3.3 J. This value is about four orders of magnitude larger than for flammable gas mixtures. In addition, experiments show that initiation of the combustion reaction requires reactive material to be raised to the ignition temperature of about 220 °C (428 °F). Testing shows that about 5 wt% moisture can suppress ignition when the energy source is less than 270 J (0.3 Btu) or of limited duration.

7. Scenarios that might result in an organic-nitrate-propagating-combustion accident were postulated and analyzed in a conservative manner to judge the severity of possible events. Parametric analyses indicated that the tank pressure and material release is (1) primarily sensitive to the amount of reactive mass burned and, (2) secondarily to the fuel concentration in the reactive mass and the tank headspace volume available to absorb the energy. Burning between 0.1 to 0.2 m^3 (3.5 to 7.1 ft^3) of waste created tank pressures that would rupture the high-efficiency particulate air filters on SSTs. Burning 1 to 3 m^3 (35.3 to 105.9 ft^3) of waste would overpressurize and crack the dome of a SST. Burning about 1 m^3 (35.3 ft^3) of waste would result in a radiological onsite dose of approximately 600 mSv (60 rem) and an offsite dose of 0.5 mSv (0.05 rem). The consequences of burning a large quantity of waste is discussed later in this section as the representative accident.

5.3.2.17.1 Accident Scenario Assuming No Controls. If enough fuel is present and the waste is sufficiently dry, an organic-nitrate-nitrite propagating combustion event could be initiated by a variety of ignition sources. However, fuel, oxidizers, and temperature (initiators) are all important parameters. Specific conditions of fuel, moisture, and ignition sources are all required to support a propagating combustion.

The scenario without controls begins by assuming a quantity of combustible waste is created by (1) concentrating the organic chemicals contained in the waste added to the tanks, and (2) drying the waste to reactive conditions. Next, an ignition source of sufficient energy and temperature contacts the combustible waste and initiates a combustion reaction. A resulting combustion front spreads through the combustible waste and releases significant energy and gases. The energy release liberates radionuclides and chemicals in gaseous form, and overpressurizes the tank. Overpressurization initiates a release of radiological and toxicological materials from the tank to the environment. The reaction continues until all contiguous combustible waste is consumed.

The consequences from an organic salt-nitrate combustion event are primarily caused by the high temperatures generated during the accident. At the high combustion temperatures, volatile radionuclides and other chemicals are driven off as vapors. The principal elements released, usually

driven off as hydroxide compounds, are cesium, mercury, and sodium. These elements condense into particulates as the exiting gases cool to respective condensation temperatures.

The representative calculation for the accident without controls is selected as 25 m^3 (883 ft^3) of combustible waste based on estimates from analysis of variance techniques, that show that Tank 241-U-105 represents the worst case and there is a 95% confidence that the upper bound for combustible waste (the amount of waste that exceeds the safety criteria) is 25 m^3 (883 ft^3).

For the representative accident, there is enough combustible waste to cause dome failure. The pressure transient reaches the dome failure pressure of 1.75×10^5 Pa (11 psig) at 1,350 seconds (22 min). The dome starts to crack, creating more flow openings; hence, the pressure stays constant at the tank failure pressure until all combustible waste is exhausted and the reaction stops at 2,770 seconds (46 min). The tank then quickly depressurizes. Tank failure does not cause dome collapse.

The headspace heats up because the effluent gases enter the headspace at the reaction temperature of 864 °C (1587 °F). The hot headspace gas in turn transfers heat to the dome and unreacted salt cake by radiation and convection. The peak temperatures predicted for the headspace and the dome wall are 757 °C (1395 °F) and 307 °C (585 °F), respectively.

For this representative transient, most of the material released from the waste is also released from the tank. Because of the high outflow, the aerosols do not have sufficient time to age and fall out. Fallout of airborne aerosol, therefore, is small compared to leakage to the environment. At the end of the transient, 1.1×10^{-2} kg of CsOH remains airborne in the tank, 2.2×10^{-3} kg settles in the tank, and 2.3×10^{-1} kg escapes to the environment. Hence, the fraction of CsOH released is 0.95 of the Cs contained in the combusted 25 m^3 (883 ft^3). Note that the high-efficiency particulate air filter on the tank is ruptured by excessive pressure drop early in the event and its radioactive and toxic burden is discharged to the environment. The amount of this release is trivial when compared with the release from the combustion event.

The hazard analysis qualitatively assigns a frequency of "unlikely" to the representative organic salt-nitrate reaction accident scenario. This frequency is based on "order-of-magnitude" estimates for frequencies of initiators and considering (1) only a few tanks contain large amounts of combustible waste, (2) only a small probability exists for point source ignitors contacting the small portion of combustible waste, and (3) small ignitors are unlikely to ignite moist (but combustible) waste.

Tank farm operations and activities were reviewed to determine which equipment and activities could lead to moderate strength ignition sources (greater than 3 J) being present at the waste surface or within the waste. A review of natural phenomena hazards was also performed to identify potential organic-nitrate ignitors. Lightning was determined to be the only natural phenomenon with sufficient energy and temperature to ignite combustible wastes. Other effects were evaluated such as seismic-induced collisions between in-tank equipment and resultant sparking of equipment; the review

determined that these effects would not produce capable ignitors. Nearby facility or range fires could produce flaming brands and sparks that could affect the top of the tank. However, it was judged that these flaming brands could not enter the tank and fall directly onto the waste surface. The credible ignition sources that have been identified are listed in Table 5.3.2.17-2. Ignition sources that may be strong enough to ignite flammable gases, but not strong enough to ignite organic-nitrate wastes are also listed in Table 5.3.2.17-2.

Results Summary. The consequences of the representative organic salt-nitrate combustion accident have been calculated assuming conservative waste radioactive and toxic chemical concentrations. These consequences are listed in Table 5.3.2.17-3. The supporting calculations are documented in WHC-SD-WM-CN-058.

Implications of Results. The results of the scenario assuming no controls are significantly above the risk guidelines. Therefore, controls are required.

5.3.2.17.2 Accident Scenarios Assuming Controls. Effective controls to mitigate the consequences of organic-nitrate accidents have not been specified; rather, risk is managed by imposing controls to prevent occurrence. Prudent controls designed to prevent a significant accident are described in Section 5.3.2.17.4, "Controls."

The scenario with controls is assumed to be the same as the accident without controls. However, the controls identified in Section 5.3.2.17.4 eliminate possible ignition sources with the exception of lightning. Lightning is discussed in Section 5.3.2.23.2. The frequency category for an organic-nitrate combustion initiated by lightning is "extremely unlikely."

Results Summary. The consequences from the organic-nitrate combustion scenario with controls are the same as for the scenario without controls, except that the toxicological consequences (sum-of-fractions) are based on guidelines for an "extremely unlikely" event. Therefore, the chemical concentration guideline values are higher (ERPG-3 rather than ERPG-2 for onsite and ERPG-2 rather than ERPG-1 for offsite). Consequently, the reported mitigated sum-of-fractions numbers are lower than for the unmitigated accident. The radiological and toxicological consequences of the organic salt-nitrate reaction releases with controls are presented in Table 5.2.3.17-4.

Implications of Results. Even with controls, the offsite and onsite radiological and toxicological consequences are significantly above the risk guidelines. There is a large uncertainty regarding the true hazard posed by the organic chemicals that were sent to the tank farms. The analysis of this section is judged to be quite conservative because several conservative assumptions were made in circumstances when direct measurements of the waste hazards were unavailable. Additionally, several phenomena that reduce risk have not been fully accounted. Therefore, this accident analysis is continuing to be refined. In the interim, important waste management

operations need to be continued, with prudent controls applied (Chapter 7.0 "Conclusions"). Several of the key assumptions and discounted phenomena are now discussed.

The actual fuel content of most of the sampled waste is unknown because most waste samples have been analyzed for total TOC rather than energetics or specific organic species. Therefore, the fuel content is conservatively assumed to be represented by the TOC. That is, all TOC is assumed to be a fuel as energetic as sodium acetate (the most energetic fuel identified during laboratory experiments). This is judged to be conservative as very little of the organic chemicals included in the original waste streams are this energetic. Of the nearly 3,000 metric tons of organic chemicals sent to the tank farms, less than about 1,200 metric tons were complexants and of the complexants added, only a small fraction was acetate (Agnew 1996). Most of the other organic materials sent to the tank farms (e.g., oxalate and process extractants such as TBP [tributyl phosphate] and NPH) do not support condensed-phase propagating combustion reactions.

It is also assumed that all waste that exceeds the organic-nitrate TOC combustion criterion will burn. This is conservative, as experiments with waste simulants indicate the actual minimum TOC value is closer to 6.0 wt% even for the most energetic fuel, sodium acetate, totally dry. Sodium acetate is the reference organic material used and the equations have been normalized to it. Two energetic surrogates were found not to have a lower flammability limit (i.e., even stoichiometric concentrations could not sustain a propagating combustion). These were sodium acetate trihydrate and sodium oxalate.

The chemical decomposition (aging) of organic chemicals has reduced the hazard significantly by destroying the fuel. Studies indicate that organic complexants undergo hydrolytic and radiolytic decomposition (aging) under tank waste conditions. The net effect of aging decreases the potential chemical energy of the waste. Thus, much of the original fuel such as EDTA is likely to degrade to nonfuel species such as oxalate.

The influence of temperature and radiation dose on the rate of aging is not sufficiently defined to quantify the effect aging has had on safe storage. Therefore, no credit for aging was assumed in this safety analysis. Kinetic data for aging are being investigated using waste simulants, and the composition of actual waste will be examined in an effort to quantify aging in the future.

A significant portion of the energetic organic chemicals (fuels) are probably in solution and are therefore not a combustion hazard. The solubility properties of organic complexants are being investigated. Tests with waste simulants indicate that with the important exception of sodium oxalate, all the other sodium carboxylate salts and their principal decomposition products are very soluble in the alkaline supernatant solutions in the tanks.

The measured solubility limit for the energetic complexants (EDTA, nitrilotriacetate, glycolate, succinate, dibutylphosphate, and citrate) is approximately 100 g of organic carbon/L of supernate. Supernatant solutions from 61 tanks have been analyzed for TOC concentration. Only five of these

tank supernatant liquids had total organic carbon concentrations greater than 14 g/L. Because the highest measured value for total organic carbon (approximately 40 g/L) is substantially below the measured limit of 100 g/L, it is anticipated that most or all of the energetic complexants are contained in the liquid phase and are not a combustion hazard.

For this safety analysis, it is assumed that all of the waste in a tank that exceeds the combustion criterion is contained in a single contiguous mass. If the combustible waste were contained in several noncontiguous regions, only the region that was ignited would burn, thereby reducing the severity of the event.

5.3.2.17.3 Key Accident Scenario Assumptions. The key assumptions and parameters used in this accident analysis that relate to facility configuration, facility conditions, and operating practices include:

- Key assumptions that affect accident frequency include:
  - This accident scenario applies to any location where dry, fuel-rich organic waste could exist. Because of the lack of waste condition information (fuel and moisture) in many waste storage facilities, the organic-nitrate runaway and propagating combustion hazard is assumed to be applicable to

    Single-shell waste storage tanks
    Double-shell waste storage tanks
    Aging Waste Facility storage tanks
    Double-contained receiver tanks
    Inactive miscellaneous underground storage tanks
    Catch tanks
    244-AR Vault
    Waste transfer lines.

    Most of the wastes are too dilute in fuel or too wet to support propagating combustion reactions. This analysis assumes that less than ten tanks might contain significant amounts of combustible waste.
  - On the basis of a review of the equipment, operations, and natural phenomena applicable to waste storage and management, the only ignitors capable of igniting reactive wastes are very hot electric filaments, hot metal fragments, or slag from welding/torch-cutting activities, vehicle fuel fires, rotary mode core drilling, lightning, and flammable gas burns.
- Key assumptions that affect accident consequences include:
  - Only the waste which is reactive at the beginning of the accident will react and release radionuclides and toxic chemicals. The reaction does not produce sufficient heat to dry out adjacent or overlying wastes not already reactive at the beginning of the accident. The amount of combustible waste burned in the analysis is based on waste moisture estimates that are applicable to Tank 241-U-105 now (and near-term) under

passive ventilation conditions. Accelerated dryout that might occur under active ventilation conditions could create a larger quantity of combustible waste than has been analyzed.

5.3.2.17.4 Controls.

Safety Structures, Systems, and Components. Safety-Class and Safety-Significant structures, systems, or components that have been selected to provide temperature monitoring for tank bump accident prevention in certain SSTs, DSTs, and AWF tanks (Section 5.3.2.22), as well as Safety-Class and Safety-Significant structures, systems, or components that have been selected to provide active ventilation to prevent flammable gas deflagrations in certain SSTs, DSTs, and AWF tanks (Section 5.3.2.14), also provide protection against the postulated phenomena of organic-nitrate reactions initiated by bulk heat up to undefined elevated waste temperatures. Table 5.3.2.17-7 lists the safety structures, systems, and components selected to prevent the organic salt-nitrate reaction. Such elevated waste temperatures would occur over a presumed long time period, and only during an extended ventilation outage.

Technical Safety Requirement controls. Table 5.3.2.17-5 lists the Technical Safety Requirement controls selected to prevent or mitigate the risk of organic-nitrate condensed-phase propagating combustion accidents. For each control, the safety function is described and additional comments are provided as appropriate.

The Technical Safety Requirements as delineated in Table 5.3.2.17-5 are applicable to the following Tank Waste Remediation System facilities:

- Single-shell waste storage tanks
- Double-shell waste storage tanks
- Aging Waste Facility storage tanks
- Double-contained receiver tanks
- Inactive miscellaneous underground storage tanks
- Catch tanks
- 244-AR Vault
- Waste transfer lines.

A limit on waste temperature of $\leq$ 121 °C ($\leq$ 250 °F) for has been established to ensure that waste does not reach chemical runaway temperature thresholds. Technical Safety Requirements that have been selected to provide temperature monitoring in certain SSTs, DSTs, and AWF tanks consistent with the tank bump accident analysis (Section 5.3.2.22), as well as Technical Safety Requirements that have been selected to provide active ventilation to prevent flammable gas deflagrations in certain SSTs, DSTs, and AWF tanks (Section 5.3.2.14), also provide protection against the postulated phenomena

of organic-nitrate reactions initiated by bulk heat up to undefined elevated waste temperatures. Such elevated waste temperatures would occur over a presumed long time period, and only during an extended ventilation outage.

Defense-in-Depth. Defense-in-Depth protection measures for organic-nitrate exothermic reaction accidents are shown in Table 5.3.2.17-6.

5.3.2.17.5 References.

LA-UR-96-989, 1996, *History of Organic Carbon in Hanford High Level Waste Tanks: HDW Model*, Rev. 3, Los Alamos National Laboratory, Los Alamos, New Mexico.

TF-96-0096 (USQ Tracking No.), 1996, *Condensed-Phase Organic Nitrate Reactions*, Rev. 0, Westinghouse Hanford Company, Richland, Washington.

WHC-SD-WM-CN-058, 1996, *Compilation of Calculation Notes in Support of Organic Salt-Nitrate Reactions Safety Analysis*, Rev. 0-A, Westinghouse Hanford Company, Richland, Washington.

Table 5.3.2.17-1. Organic-Nitrate Waste Grouping.

Organic-nitrate waste group	Applicable facilities	Comments
Pose no hazard because of supernate above the waste solids level	DSTs, AWF tanks, DCRTs, 244-AR TK 001, 002, 003, 004	Salt well pumping of these tanks is not performed. Dry waste solids would only occur if waste heels are left in the tank following pumping and the heel is allowed to dry because of evaporation
SAFE	SSTs: A-101, A-102, A-103, A-106, B-103, B-104, B-106, B-110, B-111, B-201, B-204 BX-101, BX-104, BX-105, BX-106, BX-107, BX-108, BX-109, BX-110, BX-111, BX-112, BY-106 C-101, C-103, C-104, C-105, C-106, C-108, C-109, C-110, C-111, C-112, C-204, S-104, S-109, S-111 SX-102, SX-108, SX-113 T-102, T-104, T-105, T-106, T-107, T-108, T-109, T-111, TX-102, TX-107, TX-118, TY-101, TY-102, TY-103, TY-104, TY-105, TY-106 U-103, U-110, U-111, U-201, U-202, U-203, U-204	Tanks were placed in the SAFE group if its waste has a low organic fuel content and is thus judged to be non-combustible without consideration of waste moisture. That is, even if these wastes were dried out, the waste would not be combustible
CONDITIONALLY SAFE	SSTs: AX-102, C-201, C-202, U-105	Tanks were placed in the CONDITIONALLY SAFE group if they were judged to pose a small risk when waste moisture was considered, but could pose a risk if the waste were dried out
UNSAFE	None	Tanks would be placed into the UNSAFE group if they were judged to pose a significant risk even considering moisture present, or lack there of, under current conditions
Unassigned because of a lack of information and analysis (unsampled)	SSTs: all not listed under SAFE, CONDITIONALLY SAFE, or UNSAFE above Catch Tanks: all MISFs: all Waste transfer lines that contain waste solids	

AWF = Aging Waste Facility.
DCRT = double-contained receiver tank.
DST = double-shell tank.
MISF = miscellaneous inactive storage facility.
SST = single-shell tank.

Table 5.3.2.17-2. Summary of Organic-Nitrate Condensed Phase Ignition Source Evaluation.

Operation	Incident Conditions	Ignition Potential
In-tank instrumentation	Electrical overcurrent	Negligible, ignition not credible
Grinding and drilling operations	Sparks from grinding and drilling operations on or near a riser	Negligible, ignition not credible
Still camera photography	Dropping flash unit onto the waste surface, hot filament contacts waste	Ignition temperatures and energies are possible
Video camera	Dropping light unit onto the waste surface, hot filament contacts waste	Ignition temperatures and energies are possible
Hot metal from welding and torch cutting operations	Hot steel particles or pieces drop and contact the waste	Ignition temperatures and energies are possible
Vehicle operation above the tank	Rupture of fuel tank on aboveground equipment, fuel leakage into the tank, subsequent fire	Ignition temperatures and energies are possible
Rotary-mode core sampling	Loss of bit cooling, failure to shut down drill sampler causes frictional heating of the waste	Ignition temperatures and energies are possible
Lightning strikes	Lightning strike on or near a tank or equipment causes lightning current to reach the waste	Ignition temperatures and energies are possible
Flammable gas burn	Flammable gas burn in the tank headspace ignites the waste	Ignition temperatures are possible

Table 5.3.2.17-3. Radiological and Toxicological Consequences for 25 m^3 Organic-Nitrate Combustion Accident (No controls in place - accident is "unlikely").

Consequences	Onsite dose/exposure		Offsite dose/exposure	
	Calculated dose	Risk guideline	Calculated dose	Risk guideline
Radiological	86,000 mSv (8.6 E+03 rem)	50 mSv (5.0 rem)	71 mSv (7.1 rem)	5 mSv (0.5 rem)
Toxicological (SOF)	1.4 E+05	1 (ERPG-2)	160	1 (ERPG-1)

Notes: The above table is based on the following: Total waste volume = 1582 m^3, Headspace volume = 1657 m^3, TOC = 7.0 wt%, H_2O = 10 wt%, and amount of combustible waste is 25 m^3 (95% confidence on the upper bound of combustible waste = 1.6% for U-105).
ERPG = Emergency Response Planning Guideline.
SOF = sum-of-fractions.

Table 5.3.2.17-4. Radiological and Toxicological Consequences for 25 m^3 Organic-Nitrate Combustion Accident (Controls in place - Accident is "extremely unlikely").

Consequences	Onsite Dose/Exposure		Offsite Dose/Exposure	
	Calculated dose	Risk guideline	Calculated dose	Risk guideline
Radiological	86,000 mSv (8.6 E+03 rem)	100 mSv (10 rem)	71 mSv (7.1 rem)	40 mSv (4.0 rem)
Toxicological (SOF)	1,000	1 (ERPG-3)	120	1 (ERPG-2)

Notes: The above table is based on the following: Total waste volume = 1582 m^3, Headspace volume = 1657 m^3, TOC = 7.0 wt%, H_2O = 10 wt%, and amount of combustible waste is 25 m^3 (95% confidence on the upper bound of combustible waste = 1.6% for U-105).
ERPG = Emergency Response Planning Guideline.
SOF = sum-of-fractions.

Table 5.3.2.17-5. Technical Safety Requirement Controls for Organic-Nitrate Condensed-Phase Combustion Accidents. (3 sheets)

Control	Safety function	Comments
0.0 Temperature Limits A temperature Limit of ≤ 121 °C (250 °F) is applicable to the following: C-106, SX-103, SX-107, SX-108, SX-109, SX-110, SX-111, SX-112, SX-114, DSTs, and AWF tanks	Prevents tank waste from reaching a chemical runaway threshold temperature	Temperature monitoring required to prevent a tank bump is conservatively used to ensure that this chemical runaway threshold is not reached
SST waste temperature controls • The waste temperature shall be ≤ 205 °F (96 °C). DST and AWF Tank Waste Temperature Controls • The waste temperature shall be either: ≤ 195 °F (91 °C) in all levels of the waste. OR ≤ 195 °F (91 °C) in the top 4.6 m (15 ft) of the waste. AND ≤ 215 °F (102 °C) in the waste below 4.6 m (15 ft).		
1.1 Ignition Controls Ignition source controls are applicable unless waste solids are verified to be covered by liquids 1. Flame (torch) cutting and welding shall be prohibited unless provisions for eliminating the potential for hot metal and slag contacting the waste are provided (e.g., catch trays)	Eliminates ignition sources from tanks that could pose an organic-nitrate hazard by preventing moderate or high energy ignition sources from contacting combustible waste	1. Torch cutting and welding - no comment
2. Restraints shall be used on equipment, particularly lights or other equipment with hot filaments or high surface temperatures (greater than 3 J of energy and a temperature of 160 °C [320 °F]), to prevent these energy sources from falling and contacting combustible waste		2. Hot equipment - the temperature limit for contact by hot equipment is set to 160 °C (320 °F) to account for the possibility of localized organic-nitrate chemical self heating in the heated portion of the waste which could raise the waste temperature to the ignition temperature of 230 °C (446 °F)

Table 5.3.2.17-5. Technical Safety Requirement Controls for Organic-Nitrate Condensed-Phase Combustion Accidents. (3 sheets)

Control	Safety function	Comments
4. Physical barriers shall restrict vehicle access to those aboveground structures outside of tank farm boundaries that can direct liquids into waste tanks. Only vehicles with protected fuel systems shall be allowed within barriers		4. No comment
5. Speed limit controls		5. No comment
6. Lightning protection measures shall be imposed as discussed in Section 5.3.2.23.2 to reduce the frequency of lightning current arcing to or through the waste		6. Lightning - no comment
7. All flammable gas ignition controls in respective facility when and where they are required to prevent flammable gas deflagrations		7. A flammable gas deflagration may also be an ignition source for an organic-nitrate combustion event. Therefore, where potential hazards include both flammable gas and organic-nitrate combustion, the controls for flammable gas described in Section 5.3.2.14 also prevent or reduce the potential for organic-nitrate combustion
8. Rotary mode core sampling is permitted only per approved Authorization Basis		8. None
1.2 Moisture Controls 1. Interim stabilization of conditionally safe or unassigned tanks by salt well pumping shall not be performed until sampling and analysis is performed and it is determined that the post-pumped condition does not pose a significant risk (i.e., the post pumped condition does not result in a condition that requires the waste to be placed in the UNSAFE group). See Table 5.3.2.17-1 for the SST waste group status	1. and 2. Prevents removal of tank moisture which protects wastes from potential organic-nitrate combustion events	
2. Emergency pumping in response to tank leaks in conditionally safe or unassigned SSTs shall be limited to the supernate above the solid waste level unless requirement 1 is satisfied or DOE approval of a waiver to this requirement is received		
3. For conditionally safe tanks where moisture is credited in preventing combustible conditions, a surveillance program shall periodically verify by liquid level monitors, visual observation, or other available means that the waste does not dry out to become unsafe	3. Ensures that conditionally safe waste does not dry out to the point where it would be unsafe	

Table 5.3.2.17-5. Technical Safety Requirement Controls for Organic-Nitrate Condensed-Phase Combustion Accidents. (3 sheets)

Control	Safety function	Comments
4. For conditionally safe tanks only, ventilation system design or operating changes that may cause increased moisture loss shall be evaluated for the effect on waste such that creating conditions that would require placing the waste in the unsafe group is prevented	4. Ensures that ventilation system design or operating changes are not made without consideration of the impacts on the tank waste moisture content that prevents organic-nitrate combustion in the tanks	
HEPA Filter Control Program with the following key elements: 1. Periodic radiation survey to monitor HEPA filter loading 2. HEPA filter replacement per change-out criteria, i.e., ≤ 2 mSv/h (200 mrem/h)	Reduce consequences from a possible HEPA filter failure by limiting the inventory available	None
Emergency Preparedness • Response procedures	Mitigates consequences of an organic-nitrate fire	None
Process instrumentation and measuring and test equipment	Prevents consequences of organic-nitrate reaction accident by ensuring identification and traceability of monitoring and detection equipment	The process instrumentation and measuring and test equipment control provide requirements for the instrumentation used to monitor the temperature in accordance with temperature controls

DCRT = double-contained receiver tank.
DST = double-shell tank.
HEPA = high-efficiency particulate air (filter).
mSv = millisievert.
RMCS = rotary mode core sampling.
SST = single-shell tank.

Table 5.3.2.17-6. Defense-in-Depth Controls for Organic-Salt Nitrate Reactions.

Control	Safety Function	Comment
Vehicle positioning spotters	Spotters provide additional level of control in positioning cranes/vehicles	Reduces probability of analyzed accident
Tank Farm Fences	Provide line of demarcation within which Ignition Control Program key elements related to vehicle fuel systems must be met	Fence gates are typically closed and locked
HEPA Filter replacement at 1 mSv/h (100 mrem/h)	Limit inventory available for release. Limit dose rate to workers in vicinity of the filters	None

Table 5.3.2.17-7. Safety Structures, Systems, and Components for Organic Salt-Nitrate Reaction.

Structures, Systems, and Components	Safety Classification		Safety Function	Comments
	SC	SS		
Temperature monitoring systems (241-C-106; 241-SX-103, 107, 108, 109, 110, 111, 112, 114; all double-shell tanks; and all Aging Waste Facility tanks)		X	Monitor tank waste temperature to provide operators with information on the existing temperatures in the waste so that necessary actions can be taken to prevent reaching waste saturation temperatures	Also provides protection against tank bump (Section 5.3.2.22)

This page intentionally left blank

5.3.2.18 Surface Leak Resulting in Pool.

Purpose of Analysis: Surface leaks of waste that form pools are a safety concern because a fraction of the waste can be resuspended (entrained) in wind blowing over the surface of the pool, or over the surface of contaminated soil where the pool may have soaked into the soil. Resuspended waste can lead to significant inhalation doses to onsite and offsite receptors. In addition, waste surface pools and contaminated soil can produce significant shine doses and skyshine doses to onsite receptors.

Analysis Strategy: Hazardous conditions that can result in leaks of waste to the surface of the soil have been identified in the hazards analysis. The hazardous conditions can be grouped into the following categories:

- Overflows of various pits associated with waste transfer (i.e., pump, valve, and sluice pits; diversion boxes; vault facility pits; and the vent station nozzle pit) caused by leaks from piping, jumpers, valves, or transfer pumps in the pits during transfers
- Overflows of various pits associated with waste transfer caused by misrouting through compromised transfer paths
- Overflows of various storage tank process pits (e.g., double-contained receiver tank [DCRT], double-shell tank [DST], catch tank pump pits) caused by the overfilling of storage tank with waste
- Overflows from various process pits caused by raw water leaks that overfill waste storage tanks connected via open drain lines or risers (includes overflows of DCRTs, DSTs, single-shell tanks [SSTs], and catch tanks)
- Overflows of slurry line cleanout boxes caused by seal leaks from cleanout lines during transfers
- Surface pools caused by leaks from SST temporary above grade transfer (over-the-ground transfer) lines
- Overflows through transfer line encasement risers (requires failure from primary pipe concurrent with a closed or plugged encasement drain)
- Surface pool leaks caused by backflows of waste into service water or flush water supply systems
- Pool leaks inside various interfacing facilities (e.g., 242-S Evaporator) caused by misrouting of waste from tank farms.

The bounding, representative accident selected for detailed analysis (assuming no controls) was an overflow of a process pit caused by a misrouting of waste through an open nozzle. The misroute scenario produces the highest potential leak rate and the largest surface pool of waste in a given time frame. Even when waste is properly routed, leaks

from transfer equipment in the pits (e.g., leaks caused by misaligned jumpers, failed jumper gaskets, failed valve packing, failed pump seal, failed piping welds) can result in an overflow of a pit, but a longer time is required than in the misroute scenario. The misroute accident therefore bounds scenarios involving leaks from jumpers, valves, or piping within the pit. Surface pools of waste that could be caused by subsurface leaks from buried portions of transfer lines are covered in Section 5.3.2.19.

5.3.2.18.1 Accident Scenario Assuming No Controls.

Sequence of Events. For the scenario assuming no controls, the waste is postulated to be misrouted into a process pit where the cover blocks have been removed and the pit drain is closed. The misroute is postulated to involve aging waste facility waste because this type of waste has the highest inhalation dose potential of the three waste types. The accident analysis assumes the waste is misrouted into the 241-A-A valve pit. Evaluation of the accident scenarios with pit volumes smaller than valve pit 241-A-A (15 m^3 [530 ft^3]) indicated potential for larger surface pools or spray leaks. The potential is due to a combination of smaller pit volume and potentially inadequate transfer system covers. The accident scenario assuming no controls is not affected by the size of the pit since the entire liquid volume available is assumed to result in a surface pool (HNF-2296, *Justification for Continued Operation of Transfer Lines Having Structures with Less Volume than 241-A-A Valve Pit*).

The waste transfer pump is assumed to continue operating for 12 hours before the leak is visually observed and the transfer pump is shut off. The waste flow rate into the pit is conservatively assumed to be the run out flow rate of the transfer pump (1,136 Lpm [300 gpm]), based on tank farm pump performance curves. Over a 12-hour period, this results in a total spill volume of 817,650 L (216,000 gal).

While the pit is filling with waste and before the nozzle becomes submerged, aerosols are generated from splatter and splashing. After the nozzle becomes submerged and as the pit fills, aerosols are resuspended from the surface of the liquid in the pit (from welling, wave action). The waste rapidly fills the pit, overflows to the ground surface, and spreads out on the soil surface until the transfer pump is shut off at 12 hours.

While the surface pool is growing, liquid aerosols are resuspended in wind blowing over the surface of the pool. After the transfer pump is shut off, the pool is postulated to soak into the ground. The leak occurs when the ambient temperature is below the saturation temperature of the waste. Dissolved salts crystallize out of solution while the pool soaks in, leaving a surface layer of contamination. Entrained sludge particulates in the waste are also postulated to be filtered out and left on the surface of the soil. Particulate surface layer contamination is postulated to be resuspended as the soil dries out for an indefinite time period after the transfer pump has been shut off.

The onsite receptor is assumed to be exposed to aerosols generated from splatter, splashing, and resuspension while the pit is filling and to aerosols resuspended from the surface pool as it is forming during the first 12 hours

of the accident. The onsite receptor is also exposed to shine and skyshine dose for the 12-hour exposure period. The offsite receptor is assumed to be exposed to the aerosols released during the first 12 hours of the accident and to waste particulates resuspended from the contaminated soil surface for an additional 24 hours after the transfer pump has been shut off and the waste has soaked into the soil.

The frequency category of the accident is determined on the basis of the likelihood of the initiating event. Tank farm operating experience indicates that waste leaks into process pits are "anticipated" events. WHC-SD-WM-CN-049, *Calculation Notes for Surface Leak Resulting in Pool, TWRS FSAR Accident Analysis*, summarizes several occurrence reports containing accounts where waste leaked into process pits during transfers. Between 1972 and 1996, the occurrence reporting database includes five accounts of waste being misrouted through compromised transfer paths into process pits.

Results Summary. The onsite and offsite radiological and toxicological consequences calculated for the valve pit overflow are summarized and compared against the risk guidelines for the "anticipated" frequency category in Table 5.3.2.18-1. The onsite dose includes 84 mSv (8.4 rem) from shine and 910 mSv (91 rem) from skyshine. Supporting calculations are documented in WHC-SD-WM-CN-049.

Implications of Results. The radiological consequences of the representative accident exceed both the onsite and offsite risk guidelines. The onsite toxicological consequences also exceed the risk guidelines. Therefore, safety structures, systems, and components; Technical Safety Requirement controls; or both are required.

5.3.2.18.2 Accident Scenario Assuming Controls.

A suite of controls was selected to prevent misrouting through open nozzles into pits and to prevent jumpers from disconnecting during transfers. These controls include programs to ensure configuration management of transfer routings, administrative procedures to require independent verification of valve lineups before transfers, and administrative procedures that require leak tests of jumpers following jumper changes. In addition, a TSR exists to blank off all open nozzles in pits where waste could be misrouted.

The scenario assuming controls takes credit for the just-described controls to prevent high flow rate leaks into process pits. Given the preventive controls, a maximum transfer equipment leak rate of 1.3 L/s (20 gpm) was assumed. To mitigate transfer equipment leaks inside process pits, the process pit leak detectors and their alarms were elevated to Safety-Class status. In addition, a Technical Safety Requirement control was selected to ensure operators shut off the transfer pump following activation of the pit leak detector. In addition, a Technical Safety Requirement control was selected to ensure the pit cover is on during transfers, which would limit the release of aerosols from the pit during the leak and limit shine and skyshine doses to the onsite receptor.

Sequence of Events. The sequence of the accident assuming controls is as follows:

- An equipment leak (e.g., gasket failure) inside a cleanout box with an interior volume of 0.2 m^3 (7.1 ft^3) causes a low volume leak (maximum leak rate assumed to be 1.3 L/s [20 gpm]).
- The COB drain is assumed to be plugged at the time of the leak.
- The COB cover is on at the time of the leak.
- The COB leak detector is assumed to alarm after 51 mm (2 in.) of waste have built up in the bottom of the pit.
- Flow is assumed to continue for 30 minutes after the leak detector alarms, allowing time for operators to respond to the alarm and to shut off the appropriate transfer pump.
- After the pump is shut off, 20% of the waste contained in a 3,048-m (10,000-ft), 77-mm- (3-in.-) diameter transfer line is assumed to drain back through the leakage path.
- Aerosols are generated inside the COB from splatter, splashing, and spraying while the pump is running.
- Convection currents in the COB are assumed to keep some aerosols in suspension after the transfer pump is shut off.
- Aerosols are expelled through gaps in the COB cover because of liquid displacement, the heat load in the COB, atmospheric pressure changes, and wind effects.

Results Summary. The onsite and offsite radiological and toxicological consequences of the accident assuming controls are summarized and compared with the risk guidelines in Table 5.3.2.18-2. Supporting calculations are documented in WHC-SD-WM-CN-049.

Implications of Results. The controls selected to mitigate equipment leaks inside the COB are shown to be at the onsite radiological risk guidelines. Additionally, the offsite radiological dose and onsite and offsite toxicological exposure consequences are below the risk guidelines.

5.3.2.18.3 Key Assumptions. Assumptions related to the derivation of the accident frequency and calculation of the accident consequences are documented in WHC-SD-WM-CN-049. Key assumptions are listed below.

Important to Accident Frequency. There are no key assumptions related to the accident frequency estimate.

Important to Accident Consequences.

- The controls selected to prevent misroutes through open nozzles into waste transfer-associated structures and to prevent jumpers from disconnecting are assumed to preclude high flow rate leaks.

- The maximum leak rate into the waste transfer-associated structures, given the preventative controls, is assumed to be 1.3 L/s (20 gpm) from a degraded jumper gasket.
- A transfer system-associated structure $\geq$ 15 m^3 (530 ft^3) will totally contain the leak.
- The leak is assumed to occur in a COB.
- The pit leak detector alarm is assumed to annunciate after 51 mm (2 in.) of waste have built up in the COB.
- The operator is assumed to shut down the appropriate transfer pump 30 minutes after the leak detector alarm goes off.
- Supplemental covers in addition to the transfer system covers are assumed to limit the spray-leak-generated aerosol.

5.3.2.18.4 Controls. The following controls are applicable to waste transfers and waste transfer facilities, as specified in the associated tables. See Section 5.3.2 for additional discussion of how the selected controls prevent or mitigate hazardous conditions and accidents caused by waste transfer misrouting.

Safety Structures, Systems, and Components. Tables 5.3.2.18-3 lists the Safety-Class and Safety-Significant structures, systems, and components selected to mitigate the risk of surface leaks that would result in pools. For each safety structure, system, and component, the safety function is described, and additional comments are provided as appropriate.

Technical Safety Requirement Controls. Table 5.3.2.18-4 lists the Technical Safety Requirement controls selected to mitigate the risk of surface leaks resulting in pools. For each control, the safety function is described and additional comments are provided as appropriate.

Defense-in-Depth. In addition to the identified safety structures, systems, and components and Technical Safety Requirement controls, other engineering and Administrative Controls provide further Defense-in-Depth protection for the public and workers against the risk of surface leaks resulting in pools. The Defense-in-Depth controls are identified in Table 5.3.2.18-5 along with their safety function and additional comments, as appropriate.

5.3.2.18.5 References

HNF-2296, 1998, *Justification for Continued Operation of Transfer Lines Having Structures with Less Volume than 241-A-A Valve Pit*, Rev. 0, Duke Engineering and Services Hanford, Inc., Richland, Washington.

Wagoner, J. D., 1998, *Authorization Basis Approval of Justification for Continued Operation (JCO) of Transfer Lines Having Structures with Less Volume than the 241-A-A Valve Pit* (Letter 98-WSD-052 to H. J. Hatch, Fluor Daniel Hanford, Inc., March 17), U.S. Department of Energy, Richland Operations Office, Richland, Washington.

WHC-SD-WM-CN-049, 1998, *Calculation Notes for Surface Leak Resulting in Pool, TWRS FSAR Accident Analysis*, Rev. 0-B, Duke Engineering and Services Hanford, Richland, Washington.

Table 5.3.2.18-1. Consequences of Surface Leak Resulting in Pool Assuming No Controls.

Receptor/hazard	Calculated dose/exposure	Evaluation guideline, "anticipated frequency"
Onsite radiological	3,300 mSv (330 rem)	5 mSv (0.5 rem)
Offsite radiological	360 mSv (36 rem)	1 mSv (0.1 rem)
Onsite toxicological sum-of-fractions	5.0	1
Offsite toxicological sum-of-fractions	0.32	1

Table 5.3.2.18-2. Consequences of Surface Leak Resulting in Pool Assuming Controls.

Receptor/hazard	Calculated dose/exposure	Evaluation guideline, "anticipated frequency"
Onsite radiological	5.1 mSv (0.51 rem)	5 mSv (0.5 rem)
Offsite radiological	6.6 E-03 mSv (6.6 E-04 rem)	1 mSv (0.1 rem)
Onsite toxicological sum-of-fractions	1.4 E-01	1
Offsite toxicological sum-of-fractions	7.5 E-04	1

Table 5.3.2.18-3. Safety Structures, Systems, and Components for Surface Leak Resulting in Pool. (2 sheets)

Structures, systems, or components	Safety classification		Safety function	Comments
	SC	SS		
1.0 Overflows of waste transfer pits[a] due to transfer equipment leaks (all internal mechanisms)				
1.1 Transfer leak detector and interlock to transfer pump(s) or alarm	X	--	Detect leak inside pit; limit volume of waste spilled to pit	--
1.2 Transfer System Covers	X		Limit release of aerosols generated by splatter inside the pit; limit shine and skyshine dose to onsite receptor	--
1.3 Transfer System Supplemental Covers	X		Limit release of aerosols generated by spray in the COB/pit	--
1.4 Tank level detection systems and salt well flow totalizers	--	X	Support periodic material balances during transfers	See material balance TSR AC (next table)
1.5 Primary tank leak detection system	X	--	Detect misroutes into the annulus of DSTs and AWF tanks	--
2.0 Overflows of waste transfer pits due to misroutes through compromised transfer paths				
See item 1				See also TSR level controls to prevent misroutes
3.0 Overflows of process pits due to overfilling of underlying tanks[b] with waste				
3.1 Transfer leak detector and interlock to transfer pump(s) or alarm	X	--	Prevent overflow	See Defense-in-Depth controls
4.0 Overflows of process pits due to service water leaks that overflow connected waste storage tanks[b]				
4.1 Service water flow totalizers	--	X	Monitors flow of service water	--
4.2 Tank level detection systems	--	X	Indicate tank level increase due to service water line break	--
5.0 Overflows of slurry line cleanout boxes during transfers				
5.1 Cleanout box leak detectors and interlocks to transfer pump(s) or alarm	X	--	Detect leak, shut off transfer pump before cleanout box overflows	Cleanout box drains to encasement and then to process pit
5.2 Cleanout box covers	--	X	Mitigate release of aerosols generated due to splatter inside the box	See Section 1.3 of this table
6.0 Surface pools due to leaks from temporary SST OGT lines				
6.1 OGT encasements and connections	X	--	Provide secondary confinement for leaks from primary line; route leak from primary line back to process pit	--
6.2 OGT concrete shielding system	X	--	Protect OGT from vehicle impacts (if vehicle controls not implemented)	Shield blocks will be needed for shielding purposes during some transfers
6.3 Leak detectors in interfacing pits and their interlocks with the waste transfer pump(s) or alarm	X	--	Detect leak, shutdown transfer before interfacing pit(s) overflow	--

Table 5.3.2.18-3. Safety Structures, Systems, and Components for Surface Leak Resulting in Pool. (2 sheets)

Structures, systems, or components	Safety classification		Safety function	Comments
	SC	SS		
7.0 Overflows through transfer line encasement risers				
None identified	--	--	--	--
8.0 Surface pools of waste due to backflows of waste into service water/flush water supply systems				
8.1 Pressure switch interlock with waste transfer pump or alarm	X	--	Prevent backflow of waste into service water system where leak could form surface pool by overflowing service pits/ buildings or leaking from above grade piping	Prevents backflow should isolation valves leak or should transfer pump be inadvertently turned on during flushing operations
9.0 Pool leaks inside interfacing facilities due to misroutes of waste from tank farms				
None identified	--	--		See TSR controls

[a]Includes valve pits, central and feed pump pits, sluice pits, leak detection pits, annulus pump pits, flush pits, catch tank pump pits, diversion boxes, vault pits, vent station nozzle pit

[b]Waste storage tanks include DSTs, SSTs, DCRTs, and catch tanks

AC = Administrative Control
DCRT = double-contained receiver tank
DST = double-shell tank
OGT = overground transfer
SC = Safety-Class
SS = Safety-Significant
SST = single-shell tank
TSR = Technical Safety Requirement

Table 5.3.2.18-4. Technical Safety Requirement Controls for Surface Leak Resulting in Pool. (3 sheets)

Control	Safety function	Comments
General applicability		
Emergency preparedness • Response procedures	Provide response procedures to mitigate structure overflow	
Transfer pump administrative lock controls	Eliminates motive force for unplanned transfers	
Transfer System Cover removal controls	Provides compensatory measures for cover removal during transfers	
1.0 Overflows of waste transfer pits* due to transfer equipment leaks (all internal mechanisms)		
1.1 Transfer System Cover	Ensure pits physically connected to the transfer route are covered during transfers	
1.2 Transfer System Supplemental Covers	Ensure pits physically connected to the transfer route are covered during transfers	Transfer system supplemental cover controls are identified in the transfer system supplemental cover JCO (Wagoner 1998 and HNF-2296)
1.3 Transfer leak detection systems and transfer pump interlocks or alarm	Ensure leak detectors and their interlocks or alarms are operable during transfers	
1.4 Jumper leak tests	Prevent jumpers from being grossly misaligned or from falling off during transfers	High flow rate leaks into pits can overflow the pits before transfer pumps can be manually shut down after leak detector alarm activates (if pit drain plugged)
1.5 Periodic material balances during transfers	Detect leaks as backup to pit leak detector; limit total leak volume	
1.6 Primary tank leak detection systems	Detect misroutes into the annulus of DSTs	
1.7 Pit floor drains open on cross-site transfer route.	Prevent structure overflows.	
2.0 Overflows of waste transfer pits due to misroutes through compromised transfer paths		
2.1 Transfer System Covers	Ensure pits physically connected to the transfer route are covered during transfers	
2.2 Transfer System Supplemental Covers	Ensure pits physically connected to the transfer route are covered during transfers	Transfer system supplemental cover controls are identified in the transfer system supplemental cover JCO (Wagoner 1998 and HNF-2296)
2.3 Transfer leak detection systems and transfer pump interlocks or alarm	Ensure leak detectors and their interlocks or alarms are operable during transfers	
2.4 Independent verification of transfer routings	Prevent misroutes through compromised paths	
2.5 Configuration management of transfer routes	Prevent misroutes through compromised paths	
2.6 Periodic material balances during transfers	Provide backup to pit leak detectors; limit total volume of waste spilled.	
2.7 Monitor interconnected tanks for level increase	Detect misroutes to limit leak volume	
2.8 Double valve isolation on interconnected lines	Prevent misroutes through compromised paths	
2.9 Caps/blanks on open nozzles	Prevent structure overflows associated with misroutes	High flow rate leaks into pits can overflow the pits before transfer pumps can be manually shut down after leak detector alarm activates (if pit drain plugged)

Table 5.3.2.18-4. Technical Safety Requirement Controls for Surface Leak Resulting in Pool. (3 sheets)

Control	Safety function	Comments
3.0 Overflows of process pits due to overfilling of underlying tanks with waste		
3.1 Periodic material balances during transfers 3.2 Transfer leak detection systems and transfer pump interlocks or alarm 3.3 Periodic material balances during transfers	Prevent overfilling of waste tank Ensure leak detectors and their interlocks or alarms are operable during transfers Detect leaks as backup to pit leak detector; limit total leak volume	
4.0 Overflows of process pits due to service water leaks that overflow connected waste storage tanks[b]		
Tank service water intrusion monitoring program	Prevent structure overflow from service water leaks	
5.0 Overflows of slurry line cleanout boxes during transfers		
5.1 Transfer leak detection systems and transfer pump interlocks or alarm	Ensure cleanout box leak detectors are operable during transfers	
5.2 Transfer System Covers	Ensure cleanout box covers are installed during transfers	
5.3 Transfer System Supplemental Covers	Ensure pits physically connected to the transfer route are covered during transfers	Transfer system supplemental cover controls are identified in the transfer system supplemental cover JCO (Wagoner 1998 and HNF-2296)
6.0 Surface pools due to leaks from temporary SST OGT lines		
6.1 Use of concrete shielding system or vehicle restrictions around OGT lines	Prevent leaks from OGT due to vehicle accidents	
7.0 Overflows through transfer line encasement risers		
7.1 Periodically verify that encasement drain valves provide an open drain path to the pit.	Prevent encasement pipe from pressurizing and filling with waste should primary line leak; ensure leak from primary pipe drains back to pit where leak can be detected by pit leak detector and/or waste can drain to storage tank	
8.0 Surface pools of waste due to backflows of waste into service water/flush water supply systems		
8.1 Service water pressure detection systems	Ensure operability of pressure switch and interlock or alarm	
9.0 Pool leaks inside interfacing facilities due to misroutes of waste from tank farms		
Transfer Control Program Key elements: Configuration management Independent verification of transfer routings Material balances	Prevent misroutes into interfacing facilities	

Table 5.3.2.18-4. Technical Safety Requirement Controls for Surface Leak Resulting in Pool. (3 sheets)

Control	Safety function	Comments

[a]Includes valve pits, central and feed pump pits, sluice pits, leak detection pits, annulus pump pits, flush pits, catch tank pump pits, diversion boxes, vault pits, vent station nozzle pit.
[b]Waste storage tanks include DSTs, SSTs, DCRTs, and catch tanks
DCRT = double-contained receiver tanks.
DST = double-shell tank.
OGT = overground transfer.
SST = single-shell tank.
TBD = to be determined.

Wagoner, J. D., 1998, Authorization Basis Approval of Justification for Continued Operation (JCO) of Transfer Lines Having Structures with Less Volume Than the 241-A-A Valve Pit, (Letter 98-WSD-052 to H. J. Hatch, Fluor Daniel Hanford, Inc., March 17), U.S. Department of Energy, Richland Operations, Richland, Washington.

HNF-2296, 1998, Justification for Continued Operation of Transfer Lines Having Structures with Less Volume than 241-A-A Valve Pit, Rev. 0, Duke Engineering and Services Hanford, Inc., Richland, Washington.

Table 5.3.2.18-5. Defense-in-Depth Controls for Surface Leak Resulting in Pool.

Control	Safety Function	Comments
1.0 Overflows of waste transfer pits[a] due to transfer equipment leaks (all internal mechanisms)		
1.1 Pit drains, where open	Allow leak to drain back to storage or catch tank; prevents overflow of pit to soil surface	
2.0 Overflows of waste transfer pits due to misroutes through compromised transfer paths		
2.1 Pit drains, where open	Drain leak back to storage or catch tank; prevent overflow of pit due to misroute	
3.0 Overflows of process pits due to overfilling of underlying tanks with waste		
3.1 DCRT vault leak detectors	Detect overflow of DCRT	
3.2 DST waste level instrumentation (FICs, manual tapes)	Detect overfilling of storage tank	
3.3 Catch tank weight factor (level indication)	Detect overfilling of catch tank	
3.4 DCRT weight factor (level indication)	Detect overfilling of DCRT	
3.6 Storage tank high level alarms	Detect overfilling of storage tank	
4.0 Overflows of process pits due to service water leaks that overflow connected waste storage tanks[b]		
See controls for item 3.0		
4.1 Flow meters in service water supply	Monitor leak	
5.0 Overflows of slurry line cleanout boxes during transfers		
None identified		
6.0 Surface pools due to leaks from temporary SST OGT lines		
6.1 Encasement leak detectors and transfer pump interlocks	Detect leaks from primary line; limit leak volume	Redundant to interfacing pit leak detectors
7.0 Overflows through transfer line encasement risers		
7.1 Encasement leak detectors	Detect leak from primary line	Where available
8.0 Surface pools of waste due to backflows of waste into service water/flush water supply systems		
8.1 Backflow preventers	Prevent backflow	
8.2 Check valves	Prevent backflow	
8.3 Isolation valve limit switch/transfer pump interlock operability	Ensure limit switch and interlocks are operable during transfers	
9.0 Pool leaks inside interfacing facilities due to misroutes of waste from tank farms		
9.1 Facility instrumentation and procedures		

[a]Includes valve pits, central and feed pump pits, sluice pits, leak detection pits, annulus pump pits, flush pits, catch tank pump pits, diversion boxes, vault pits, vent station nozzle pit

[b]Waste storage tanks include DSTs, SSTs, DCRTs, and catch tanks

DCRT = double-contained receiver tanks
DST = double-shell tank
FIC = Food Instrument Corporation
OGT = overground transfer
SST = single-shell tank

This page intentionally left blank.

5.3.2.19 Subsurface Leak Resulting in Pool.

Purpose of Analysis: This accident analysis covers leaks from buried or bermed transfer lines as potential initiators of surface pools of waste. Transfer line leaks at high flow rates that are in excess of the natural infiltration rate of the soil can result in surface pools of waste because the soil beneath the leak can become supersaturated with liquid so that the waste plume expands upwardly. Capillary action and hydraulic force (if the leak occurs at high pressure on top of the line) can contribute to the formation of surface pools. Leaks from unencased, bermed transfer lines can result in surface pools of waste if "piping" phenomena wash out the berm.

Accidents that result in surface pools of waste are of safety concern because radioactive aerosols and particulates can be resuspended by wind flowing over the pool surface or by wind flowing over a contaminated soil surface, should the waste pool soak into the soil. Resuspended aerosols and particulates can be inhaled by downwind receptors. Large pools of waste or contaminated areas of soil also can present a significant shine and skyshine hazard to onsite receptors.

Analysis Strategy: Waste is transferred in the tank farms by using three basic kinds of transfer lines: unencased direct buried or bermed lines, buried concrete encased lines, or buried pipe-in-pipe transfer lines. In general, unencased direct buried or bermed lines are used for transfers out of single-shell tanks (SSTs) (i.e., for interim stabilization of SSTs). Concrete encased lines are used for transfers between SSTs and double-shell tanks and for some transfers from interfacing facilities. The cross-site transfer line is concrete encased. Pipe-in-pipe transfer lines are generally used for transfers in the newer double-shell tank farms and for transfers to and from the 242-A Evaporator.

Leaks from transfer lines have occurred and are considered to be one of the more likely accidents within Tank Waste Remediation System. Mechanisms postulated to result in leaks from all three types of lines include aging, corrosion, erosion, thermal stress, water hammer, undermining caused by leaks from nearby pipes, seismic stress, and excavation accidents. This analysis covers transfer line leaks that are caused by internal initiators. Leaks initiated by excavation accidents are analyzed in Section 5.3.2.21, "Spray Leak from Underground Waste Transfer Lines," and leaks initiated by seismic events are covered in Section 5.3.2.23, "Natural Phenomena."

A leak from an unencased, bermed line was selected as the representative case for detailed analysis for the following reasons.

- The unencased lines are older, in direct contact with the soil, and more prone to failure than the encased lines.
- The surface pools that can develop if "piping" phenomena wash out a berm are larger than the pools that can develop as a result of leaks from buried lines.

- Leaks into concrete or pipe encasements will tend to flow back to process pits. Should the encasements leak, the volume of waste leaked to the soil will be smaller than from unencased lines.

- Leaks from concrete and pipe encasements will be under low pressure and oriented downward, so that surface pools will be far less likely to form than in the bermed, unencased pipe leak scenario.

5.3.2.19.1 Accident Scenario Assuming No Controls.

Sequence of Events. The bounding representative accident selected for detailed analysis is a leak from an unencased bermed line during a submersible pump transfer from an SST. The leak is assumed to be catastrophic (i.e., 100% of pipe flow leaks into the soil). The flow rate through the leak is the maximum flow rate of the submersible transfer pump (i.e., 189 Lpm [50 gpm]). The leak which erodes the embankment material, continues for 12.5 hours, until a 141,953-L (37,500-gal) surface pool of waste covering a surface area of 1,672 m^2 (2,000 yd^2) is formed. The leak occurs when the ambient temperature is significantly below the saturation temperature of the waste. The dissolved salts in the waste crystallize out of solution as the pool spreads and thereby limit the penetration of waste into the soil. While the pump is running, it is assumed the surface of the pool remains liquid.

After the leak is detected and the transfer pump is shut off, the remaining liquid waste soaks into the soil. Because of the filtering effect of the soil, the crystallized salts and any entrained solid precipitates carried in the waste stream are postulated to be deposited in the top few centimeters of soil.

While the pump is running and the pool is growing, aerosols are resuspended by wind blowing over the liquid surface. After the pump is shut off and the waste soaks into the soil, particulate surface contamination is resuspended as the soil drys. This resuspension continues indefinitely (until the leak site is remediated, e.g., sprayed with water to limit resuspension or covered with gravel).

The onsite and offsite receptors are exposed to resuspended aerosols and particulates from the liquid pool and contaminated soil. After the waste has soaked into the soil, the onsite receptor is exposed for 12 hours to particles resuspended from the contaminated soil surface and also to shine and skyshine. For the first 12.5 hours of the accident, the offsite receptor is exposed to resuspended waste from the surface of the growing liquid pool. For an additional 24 hours, the offsite receptor is exposed to waste particles resuspended from the contaminated soil.

The transfer lines used for interim stabilization of SSTs are beyond their intended 5-year design life. Because these lines are in contact with the soil, they are prone to corrosion failures. Therefore, on the basis of site experience, the initiating event (a leak from an unencased bermed line) is considered to be an "anticipated" event.

Results Summary. The onsite and offsite radiological and toxicological consequences of a subsurface leak resulting in a surface pool assuming no controls are presented in Table 5.3.2.19-1. The onsite radiological dose is the summation of 2.9 Sv (290 rem) resulting from inhalation and 0.24 Sv (24 rem) resulting from shine and skyshine. The supporting calculations are documented in WHC-SD-WM-CN-057, *Calculation Notes for Subsurface Leak Resulting in Pool, TWRS FSAR Accident Analysis.*

Implication of Results. The radiological consequences to the onsite and offsite receptors exceed the risk guidelines values of 5 mSv (0.5 rem) and 1 mSv (0.1 rem), respectively, for an "anticipated" event. The toxicological consequences to the onsite receptor exceed the risk guidelines. Therefore, controls are required.

5.3.2.19.2 Accident Scenario Assuming Controls.

Sequence of Events. For the scenario assuming controls, operator action is credited with limiting the duration of the release and limiting the volume of waste material leaked. Operator surveillance of unencased bermed lines every 30 minutes during SST submersible pump transfers is required to detect pipe failures and berm washouts.

Shortly after surveillance, a leak is assumed to occur and to wash out the berm. The transfer continues for 30 minutes until the operator passes by the leak point at the next surveillance interval. Thirty minutes after detection of the leak, the appropriate transfer pump is shut down.

The leak continues for 1 hour at the maximum flow rate of 189 Lpm (50 gpm) and releases 11,356 L (3,000 gal) of waste. Line holdup also flows through the leakage path. During the hour in which the transfer pump is running, aerosols are released from the growing liquid pool. After the pump is shut off, the waste soaks into the ground (a conservative assumption).

The onsite receptor is exposed to resuspended aerosols from the growing liquid pool for 1 hour before being evacuated to an upwind staging area. In addition, the onsite receptor is exposed to direct shine and skyshine radiation from the growing pool for 1 hour. The offsite receptor is exposed to resuspended aerosols from the growing liquid pool for 1 hour and to resuspended particulates from the contaminated ground for an additional 24 hours. No credit is taken for emergency response within the 24 hours to minimize resuspension by covering the leak.

The frequency of the scenario assuming controls is the same as the frequency of the scenario assuming no controls because no credit is taken for controls that would reduce the likelihood of the event.

Results Summary. The onsite and offsite radiological and toxicological consequences of a subsurface leak resulting in a surface pool assuming controls are presented in Table 5.3.2.19-2. The onsite radiological dose is the summation of 0.38 mSv (38 mrem) resulting from inhalation and 3.9 mSv (390 mrem) resulting from shine and skyshine. The offsite toxicological sum-of-fractions value is higher than the onsite because the maximum release

rate occurs after 1 hour, by which time the onsite receptor has been relocated out of the plume. The supporting calculations are documented in WHC-SD-WM-CN-057.

Implication of Results. The onsite and offsite radiological and toxicological consequences are below the risk guidelines for the scenario assuming controls.

5.3.2.19.3 Key Assumptions. Assumptions related to the derivation of the accident frequency and calculation of the accident consequences are documented in WHC-SD-WM-CN-057. Other key assumptions are listed here.

Important to Accident Frequency. No key assumptions are associated with accident frequency.

Important to Accident Consequences. Key assumptions associated with the accident consequences are as follows:

1. The waste leaked is SST waste containing 33 vol% entrained solids.
2. The leak occurs at the maximum submersible pump flow rate of 190 Lpm (50 gpm).
3. Unencased bermed transfer line surveillances are performed every 30 minutes.
4. Upon detection of the leak, 30 minutes pass before the operator turns off the appropriate transfer pump and evacuates the onsite receptor to a safe distance upwind.
5. After the transfer pump is shut off, 1,514 L (400 gal) of line holdup is assumed to drain back through the leak path. (This assumption effectively prohibits submersible pumping of the T Tank Farm.)

5.3.2.19.4 Controls. The following controls are applicable to waste transfers through single-walled direct buried or bermed lines, concrete encased lines, and pipe-in-pipe encased lines as specified in the associated tables. See Section 5.3.2 for additional discussion of how the selected controls prevent or mitigate hazardous conditions and accidents caused by waste transfer misrouting.

Safety Structures, Systems, and Components. The Safety-Class and Safety-Significant structures, systems, and components selected to mitigate the risk of surface pools resulting from subsurface leaks are listed in Table 5.3.2.19-3. For each safety structure, system, and component, the safety function is described and additional comments are provided as appropriate.

Technical Safety Requirement Controls. The Technical Safety Requirement controls selected to mitigate the risk of surface pools resulting from subsurface leaks are listed in Table 5.3.2.19-4. For each Technical Safety Requirement control, the safety function is described and additional comments are provided as appropriate.

Defense-in-Depth. In addition to the previously identified safety structures, systems, and components and Technical Safety Requirement controls, other engineering and administrative controls provide further Defense-in-Depth protection for the public and workers against the risk of surface pools resulting from subsurface leaks. The Defense-in-Depth controls are identified in Table 5.3.2.19-5 along with their safety function and additional comments, as appropriate.

5.3.2.19.5 References.

WHC-SD-WM-CN-057, 1996, *Calculation Notes for Subsurface Leak Resulting in Pool, TWRS FSAR Accident Analysis*, Rev. 0, Westinghouse Hanford Company, Richland, Washington.

Table 5.3.2.19-1. Consequences of a Subsurface Leak Resulting in Pool Assuming No Controls.

Receptor/hazard	Calculated dose/exposure	Risk guidelines (anticipated)
Onsite radiological	3.1 Sv (310 rem)	5 mSv (0.5 rem)
Offsite radiological	7.1 E-03 Sv (0.71 rem)	1 mSv (0.1 rem)
Onsite toxicological sum-of-fractions	16.7	1 (≤ERPG-1)
Offsite toxicological sum-of-fractions	3.0 E-02	1 (≤PEL-TWA)

ERPG = Emergency Response Planning Guideline.
mSv = millisievert.
PEL-TWA = permissible exposure limit, time weighted average.

Table 5.3.2.19-2. Consequences of a Subsurface Leak Resulting in Pool Assuming Controls.

Receptor/hazard	Calculated dose/exposure	Risk guidelines (anticipated)
Onsite radiological	4.2 mSv (0.42 rem)	5 mSv (0.5 rem)
Offsite radiological	0.65 mSv (0.065 rem)	1 mSv (0.1 rem)
Onsite toxicological sum-of-fractions	2.4 E-03	1 (≤ERPG-1)
Offsite toxicological sum-of-fractions	5.4 E-03	1 (≤PEL-TWA)

ERPG = Emergency Response Planning Guideline
mSv = millisievert.
PEL-TWA = permissible exposure limit, time weighted average.

Table 5.3.2.19-3. Safety Structures, Systems, and Components for Subsurface Leak Resulting in Pool.

Structures, systems, or components	Safety classification		Safety function	Comments
	SC	SS		
Waste transfer piping concrete encasement	X	--	Ensure that a leak in the primary waste transfer system piping is directed to a waste transfer-associated structure	See controls for surface leak resulting in pool, Section 5.3.2.18
Waste transfer pipe-in-pipe encasement	X	--	Ensure that a leak in the primary waste transfer system piping is directed to a waste transfer-associated structure	See controls for surface leak resulting in pools, Section 5.3.2.18
Tank level detection systems	--	X	Provides tank waste level to support performance of periodic material balances during waste transfers to detect waste leaks	Applicable to SSTs, DSTs, AWF tanks, DCRTs, and catch tanks
Salt well flow totalizer	--	X	Provide total salt well flow to support performance of periodic material balances during waste transfers to detect waste leaks	

AWF = Aging Waste Facility.
DCRT = double-contained receiver tank.
DST = double-shell tank.
SC = Safety-Class.
SS = Safety-Significant.
SST = single-shell tank.

Table 5.3.2.19-4. Technical Safety Requirement Controls for Subsurface Leak Resulting in Pool.

Control	Safety function	Comments
Waste Transfer Control Program Key elements: Single-walled direct buried/ bermed line surveillance during waste transfers (once per 12 hours for salt well pumping and once per 30 minutes for submersible pumping) Material balances shall be performed periodically during waste transfers Configuration management Independent route verification during transfer setup Monitoring of interconnected tanks for level increase Double-valve isolation on interconnected line	Detect a waste transfer line leak Detect a waste transfer line leaks and misroutes Prevent misroutings Prevent misroutings Detect misroutings	The surveillance times are based on a maximum salt well pumping flow rate of 15 Lpm (4 gpm) and a maximum submersible pumping flow rate of 189 Lpm (50 gpm)
Encasement seal loop valves are not in the closed position	Ensure that if the primary pipe leaks during waste transfer, the encasement will drain to the waste transfer-associated structure	
Emergency Preparedness Response procedure	Mitigate consequences to onsite personnel	

Table 5.3.2.19-5. Defense-in-Depth Controls for Subsurface Leak Resulting in Pool.

Control	Safety function	Comments
Active unencased transfer lines are pressure tested once a year unless successful transfer completed in the line within the year	Reduces likelihood of leaks	
Direct buried and bermed, unencased pipe is heat trace and insulated	Protect pipe from damage due to thermal shock or damage due to freezing	Insulation may have deteriorated. Heat trace on most lines are inactive
Test risers are located every 100 ft along concrete-encased transfer lines	Periodic swabbing provides confidence that transfer lines are sound	
Walkdowns are performed once/shift to detect surface leaks from cross-site line	Provides backup to material balance for leaks that might surface	
Test risers are provided on long pipe-encased transfer line	Swabbing can detect prior failure in line, minimize likelihood of leak during transfer through that line	
Some pipe-encased transfer lines are equipped with active encasement leak detectors	Detect leak during transfer, provide backup to pit leak detection	Can also be used as Safety-Class substitute for pit leak detection

5.3.2.20 Spray Leak in Structure or From Overground Waste Transfer Line.

Purpose of Analysis: Hanford Site waste is pumped under pressure during waste transfer operations. A breach of containment along a transfer route during a transfer could result in a pressurized spray release. Pressurized spray releases are a safety concern because, depending on waste pressure and leak dimensions, they can be relatively efficient generators of respirable-sized aerosols.

Analysis Strategy: Historically, the majority of spray leaks have occurred inside process pits (i.e., pump pits, valve pits, and sluice pits) along transfer routes. A spray leak inside a valve pit was selected for analysis because the number of piping connections, and thus the number of potential leak sites, is greater than in other types of process pits. In addition, there may be multiple valve pits along a given transfer route.

Spray leaks can also occur inside process pits not along normal transfer routes where waste could be inadvertently misrouted, inside diversion boxes, inside vault used in single-shell tank and double-shell tank transfers (e.g., 244-AR Vault, CR Vault), inside cleanout boxes along slurry transfer lines, from encasement risers on pipe-encased transfer lines, inside flush pits or service buildings, from above grade components of flush water systems, from temporary overground transfer lines, and inside the 204-AR Waste Unloading Facility. Spray leaks at these locations are judged to be bounded or represented by the analyzed case based on an estimated lower or equivalent frequency of occurrence or consequence.

Spray leaks from buried portions of transfer lines are mitigated by soil cover. Leaks sufficiently large to wash away the soil would not be an efficient generator of respirable-sized aerosols but could result in a surface waste pool. This scenario was analyzed in Section 5.3.2.19. It is conceivable that a spray leak could occur in a transfer line uncovered by excavation activities. This scenario is analyzed in Section 5.3.2.20. A seismic event could also initiate spray leaks should it occur coincident with a waste transfer. This scenario is analyzed in Section 5.3.2.23.3.

5.3.2.20.1 Accident Scenario Assuming No Controls.

Sequence of Events. The Tank Waste Remediation System facilities spray leak accident scenario assuming no controls postulates that a spray leak develops in a valve pit as a result of one of the following mechanisms:

- Breach in the pressure boundary of piping, a jumper, or a valve
- Leak in piping, a jumper, or a valve body caused by erosion, corrosion, thermal stress, fatigue, weld flaws, or manufacturing flaws
- Leak at a jumper-transfer pipe connection as the result of human error (e.g., misalignment of the jumper) or gasket failure

- Leak at valve gasket, packing, or seal that has degraded as the result of radiation hardening, aging, and thermal stress

- Leak at a valve seal caused by torque generated in jumper connections.

The spray is postulated to occur during a transfer of aging waste (67 vol% liquid and 33 vol% solids) through the pit. Aging waste is selected for the bounding analysis as it produces the highest dose, on a per liter basis, of all tank waste types.

The pit cover blocks (i.e., the primary barriers to release) are postulated to be off at the time of the leak. The spray is postulated, because of its momentum, to emit up and out of the pit and directly into the atmosphere. The uncovered spray leak is assumed to continue unabated for 24 hours. The onsite receptor is assumed to be exposed to the plume of aerosols generated by the spray for 12 hours, and the offsite receptor is assumed to be exposed to the entire 24-hour passage of the plume.

The frequency of the valve pit spray leak accident scenario is based on the frequency of the initiating event. In this case, the initiating event is the equipment leak that results in the pressurized spray release during a transfer. The initiating event frequency is considered to be in the "anticipated" category (1×10^{-2} to 1×10^{0} events/yr). This frequency is justified by Hanford Site experience.

Results Summary. The onsite and offsite radiological and toxicological consequences of a valve pit spray leak assuming no controls are presented in Table 5.3.2.20-1. The associated calculations are documented in WHC-SD-WM-CN-048, *Calculation Notes in Support of TWRS FSAR Spray Leak Accident Analysis*.

Implication of Results. The radiological consequences of a valve pit spray leak to the onsite and offsite receptors exceed the risk guidelines. The toxicological consequences to the onsite receptor exceed the risk guidelines. Consequently, controls are required.

5.3.2.20.2 Accident Scenario Assuming Controls.

Sequence of Events. The valve pit spray leak accident scenario assuming controls postulates that a spray leak occurs inside a covered valve pit. In assuming controls, it is postulated that the spray impacts pit cover blocks. The cover blocks are credited with preventing the direct emission of the aerosols generated by the spray to the atmosphere.

Although the cover blocks are credited for knocking down the spray, they are not sealed and, therefore, do not ensure the total containment of aerosols. Leak paths exist through gaps around the blocks and associated drain ports, access hatches, and valve handle penetrations. The aerosols, generated by the spray are assumed to be released via the leak paths. Expulsion of air is the result of a release of pressure created by temperature and humidity increases in the pit and from liquid displacement. The concentration of respirable-sized particles in the expelled air is assumed to be 100 mg/m^3.

The frequency of the valve pit spray leak scenario assuming controls is the same as the scenario assuming no controls (i.e., "anticipated") because the controls selected do not affect the frequency of initiating events.

Results Summary. The onsite and offsite radiological and toxicological consequences of a valve pit spray leak assuming controls are presented in Table 5.3.2.20-2. The associated calculations are documented in WHC-SD-WM-CN-048.

Implication of Results. The offsite radiological consequences and the onsite and offsite toxicological consequences of a valve pit spray leak assuming controls are well below the risk guidelines.

The onsite radiological consequences for the bounding, representative accident exceed the risk guidelines by a factor of eight. Although the onsite guidelines are exceeded for the valve pit spray scenario assuming controls, the identified controls (i.e., valve pit cover blocks) provide adequate assurance that operations can be conducted safely on an interim basis. This conclusion is based on the following considerations.

- The spray leak was modeled using conservative assumptions in order to maximize the release of respirable aerosol.

- To provide a bounding consequence, the representative analysis is based on a transfer of aging waste. Although transfers of aging waste may be made, transfers typically involve double-shell and single-shell tank wastes. WHC-SD-WM-CN-048 also evaluates the consequences of a spray of double-shell tank waste inside a valve pit, a spray of single-shell tank waste inside a pump pit, and a spray of single-shell tank waste inside a double-contained receiver tank pump pit. The corresponding onsite consequences assuming controls are reduced from 4×10^{-2} Sv (4 rem) for the aging waste case to 1.3×10^{-2} Sv (1.3 rem), 2.6×10^{-3} Sv (0.26 rem), and 5.6×10^{-3} Sv (0.56 rem), respectively.

- To provide a bounding consequence, the representative analysis evaluates a transfer of waste containing 33 vol% solids. This value is based on the upper operating limit of the 242-A Evaporator. Typical transfers contain a lower solids content. WHC-SD-WM-CN-048 evaluates the sensitivity of the spray leak consequences as a function of solids content and waste type. For a spray leak in a valve pit involving waste containing 5 vol% solids, the onsite consequences assuming controls are 6×10^{-3} Sv (0.6 rem) for aging waste, 2.3×10^{-3} Sv (0.23 rem) for double-shell tank waste, and 1.5×10^{-3} Sv (0.15 rem) for single-shell tank waste.

- For the scenario assuming controls, the pit drain is assumed to be closed to maximize the quantity of air expelled as a result of liquid displacement. Pit leak detectors were not selected as a mitigative control for spray leaks; however, the detectors are present in all active process pits and have been designated as Safety-Class structures, systems, and components based on analyses of surface leaks resulting in pools (Section 5.3.2.18). Functional leak detectors would limit the duration of the spray for cases where

the pit drain was closed and would reduce the volume of aerosol displaced from the pit. The Final Safety Analysis Report will quantify the reduction in consequences associated with crediting leak detectors.

- A complete halt of waste transfers is not possible without stopping interim stabilization and waste retrieval activities because both activities further significant long-term safety improvement initiatives.

5.3.2.20.3 . Key Assumptions. Key assumptions related to the derivation of the accident frequency and calculation of the accident consequences as documented in WHC-SD-WM-CN-048 are presented below.

Important to Accident Frequency. There are no key assumptions associated with the spray leak accident frequency.

Important to Accident Consequences. The following are assumptions important to the accident consequences.

- For the scenario without controls, the spray is assumed to occur at maximum transfer pump pressure of 2.17 x 10^6 Pa (300 psig).
- The cover blocks provide tortuous leak paths.
- Maximum waste temperature during transfers is assumed to be 49 °C (120 °F).
- For the scenario assuming controls, the pit drain is assumed to be closed to maximize the quantity of air expelled because of liquid displacement.

5.3.2.20.4 Controls. The following controls are applicable to waste transfers and waste transfer facilities, as specified in the associated tables. See Section 5.3.2 for additional discussion of how the selected controls prevent or mitigate hazardous conditions and accidents caused by waste transfer misrouting.

Safety Structures, Systems, and Components. Table 5.3.2.20-3 lists the Safety-Class and Safety-Significant structures, systems, and components selected to prevent or mitigate the risk of waste transfer system spray leaks. The table includes the represented case (i.e., a spray leak in a valve pit) and other potential spray leak locations. For each safety structure, system, and component listed in the table, the safety function is described and additional comments are provided, as appropriate.

Technical Safety Requirement Controls. Table 5.3.2.20-4 lists the Technical Safety Requirement controls selected to prevent or mitigate the risk of waste transfer system spray leaks. The table includes the represented case (i.e., a spray leak in a valve pit) and other potential spray leak locations. For each Technical Safety Requirement control listed in the table, the safety function is described and additional comments are provided as appropriate.

Defense-in-Depth. In addition to the above identified safety structures, systems, and components and Technical Safety Requirements, other engineering and Administrative Controls provide further Defense-in-Depth protection for the public and workers against the risk of waste transfer system spray leaks. The Defense-in-Depth controls are identified in Table 5.3.2.20-5 with the safety function and additional comments included, as appropriate.

5.3.2.20.4 References

WHC-SD-WM-CN-048, 1996, *Calculation Notes in Support of TWRS FSAR Spray Leak Accident Analysis*, Rev. 1, Westinghouse Hanford Company, Richland, Washington.

Table 5.3.2.20-1. Summary of Consequences and Frequencies without Controls.

Accident	Consequences								Frequency
	Radiological				Toxicological (SOF)				Without controls
	Calculated dose		Risk guideline		Calculated dose		Risk guideline		
	Onsite	Offsite	Onsite	Offsite	Onsite	Offsite	Onsite	Offsite	
Spray leak in valve pit or from overground waste transfer line	150 Sv (1.5 E+04 rem)	0.21 Sv (21 rem)	5 mSv (0.5 rem)	1 mSv (0.1 rem)	46	0.24	<1	<1	Anticipated

mSv = millisievert
Sv = sievert
SOF = sum-of-fractions

Table 5.3.2.20-2. Summary of Consequences and Frequencies with Controls.

Accident	Consequences								Frequency
	Radiological				Toxicological (SOF)				With controls
	Calculated dose		Risk guideline		Calculated dose		Risk guideline		
	Onsite	Offsite	Onsite	Offsite	Onsite	Offsite	Onsite	Offsite	
Spray leak in valve pit or from overground waste transfer line	41 mSv (4.1 rem)	3.7 E-02 mSv (3.7 E-03 rem)	5 mSv (0.5 rem)	1 mSv (0.1 rem)	8.1 E-02	4.2 E-04	<1	<1	Anticipated

mSv = millisievert
SOF = sum-of-fractions

Table 5.3.2.20-3. Safety Structures, Systems, and Components for Spray Leaks. (2 sheets)

Structures, systems, or components	Safety classification		Safety function	Comments
	SC	SS		
1.0 Spray leaks inside process pits,* diversion boxes, vaults, and cleanout boxes				
Transfer System Covers	X	--	Knockdown spray, limit release of aerosols to the atmosphere	Waste transfer-associated structure covers are also a mitigative feature for other accidents and provide radiation protection (i.e., shielding) for facility workers
2.0 Spray leaks from encasement risers (for pipe-in-pipe transfer lines)				
None required	--	--	--	See Table 5.3.2.21-4 for Technical Safety Requirement controls
3.0 Spray leaks from service water supply system components coincident with backflows of waste				
3.1 Pressure switch interlock to waste transfer pump(s) or alarm in service water system connections to the waste transfer system	X	--	Prevent backflow of waste into the service water line and potential leaks in structures (e.g. service pits) without mitigative safety structures, systems, and components preventing direct release to the atmosphere (i.e., covers, leak detectors)	The pressure switch in the service water lines connected to the waste transfer system are not automatically interlocked to some waste transfer pumps (e.g., waste transfer pumps in interfacing facilities that transfer waste to tank farms). An acceptable alternative is isolation of the service water line by two closed valves and a pressure switch with an alarm in a continuously monitored area. Pressure switch alarm procedures would require the immediate shutdown of the transfer pump on alarm
3.2 Backflow preventers in service water system connections to the waste transfer system	--	X	Prevent contamination of the service water system via backflow of waste into service water line	The hazardous condition of concern is contamination of the raw water system and not specifically a spray leak
4.0 Spray leaks from single-shell tank overground transfer lines				
4.1 OGT encasements and connections	X	--	Confine leak from the primary piping and ensure that a leak is directed to the encasement leak detection system	The OGT pipe encasement shall be designed to withstand the design basis earthquake and high wind
4.2 OGT concrete shielding system	X		Prevent vehicle collisions with the OGT system that could result in a loss of integrity of the primary and encasement pipe	
5.0 Spray leaks inside actively ventilated tanks				
5.1 Stack CAM and interlock to exhaust fan	X	--	Ensure exhaust fan is shut down should exhaust HEPA filters break through	Aerosol-laden air could eventually saturate the HEPA filters, resulting in their failure
6.0 Spray leaks inside the 204-AR Waste Unloading Facility				
6.1 Stack CAM and interlock to exhaust fan	X	--	Ensure exhaust fan is shut down should exhaust HEPA filters break through Prevents unfiltered aerosol release to the atmosphere	Aerosol-laden air could eventually saturate the HEPA filters, resulting in their failure

Table 5.3.2.20-3. Safety Structures, Systems, and Components for Spray Leaks. (2 sheets)

Structures, systems, or components	Safety classification		Safety function	Comments
	SC	SS		
6.2 204-AR Waste Unloading Facility Structure including west exterior doors	--	X	Knock down/confine spray within facility	The primary mitigative control is the 204-AR Waste Unloading Facility effluent stack CAM interlock to the ventilation exhaust fan. Verify that the west exterior rollup door and the west exterior personnel access door are closed during waste transfers physically connected to the 204-AR Waste Unloading Facility

*Includes valve pits, central and feed pump pits, sluice pits, leak detection pits, annulus pump pits, flush pits, and catch tank pump pits.

CAM = continuous air monitor
HEPA = high-efficiency air filter
OGT = overground transfer
SC = Safety-Class
SS = Safety-Significant

Table 5.3.2.20-4. Technical Safety Requirement Controls for Spray Leaks. (2 sheets)

Control	Safety function	Comments
General applicability		
Transfer System Cover removal controls	Provides compensatory measures for cover removal during transfers	None
1.0 Spray leaks inside process pits,* diversion boxes, vault pits, and cleanout boxes		
1.1 Transfer System Cover operability	Operable covers mitigate spray leak by knocking down/confining the spray. This controls ensures covers are operable when the waste transfer-associated structure is physically connected to the waste transfer piping during waste transfer	An exception is allowed if the waste transfer-associated structure is separated by two locked valves and continuous monitoring for spray leaks is provided
1.2 Transfer pump administrative lock controls	Eliminates motive force for unplanned transfers	To address spray leaks that may occur during inadvertent waste transfer pump starts, either the waste transfer-associated covers shall be operable or the waste transfer pump(s) physically connected to waste transfer-associated structures shall be locked out
1.3 Transfer Controls Key elements: • Double valve isolation on interconnected lines • Configuration management shall be applied to waste transfer routes • The waste transfer route configuration shall be independently verified prior to transfers	 Double valve isolation on lines interconnecting with the transfer route provides compensatory protection to prevent a spray leak in an interconnected waste transfer-associated structure when the cover is off Configuration management and independent verification of waste transfer routes serves to prevent mistransfers	
2.0 Spray leaks from encasement risers (pipe-in-pipe transfer lines)		
2.1 Hydrostatic test valve on encasement drain line (if one exists) shall not be closed	Ensures that if the primary pipe leaks during waste transfer, the encasement will drain to the waste transfer-associated structure	Control prevents pressurizing encasement risers which could result in above grade spray release

Table 5.3.2.20-4. Technical Safety Requirement Controls for Spray Leaks. (2 sheets)

Control	Safety function	Comments
3.0 Spray leaks from service water supply components due to backflow of waste		
3.1 Service water pressure detection systems	Ensure operability of pressure switch and interlock or alarm. This ensures pressure switch and interlock systems or alarms are operable during waste transfers, transfer line flushing, pump priming, and transfer line pressure testing	Includes the pressure switch/waste transfer pump interlock systems used for connections to the permanent service water system and for pressure switch/interlock systems used for connections to temporary, above grade raw water systems. Temporary above grade water lines are used for flushing and priming of SST salt well systems Note: Pressure switch/waste transfer pump interlocks or alarm shall be operable during waste transfers to prevent backflow of waste into raw water lines. To address backflow of waste during inadvertent waste transfer pump starts, either the pressure switch/waste transfer pump interlock shall be operable or the waste transfer pump(s) physically connected to the raw water line shall be locked out
4.0 Spray leaks from SST overground transfer lines		
4.1 Transfer Controls Key element: use of OGT concrete shielding system or vehicle restrictions around OGT lines.	Ensure the OGT line is protected from vehicle collisions that could result in a loss of integrity of the primary and encasement pipes Ensure worker radiation protection by design feature or administrative control	--
5.0 Spray leaks inside actively ventilated tanks		
5.1 Stack CAM and exhaust fan interlock operability	Ensures interlock is operable during transfers out of the facility and during tank farm transfers through routes physically connected to the unloading facility	--
6.0 Spray leaks inside the 204-AR Waste Unloading Facility		
6.1 Stack CAM and exhaust fan interlock operability	Ensures interlock is operable during transfers out of the facility and during tank farm transfers through routes physically connected to the unloading facility	--
6.2 Verify that the west exterior rollup door and the west exterior personnel access door are closed during waste transfers physically connected to the 204-AR Waste Unloading Facility.	Knock down spray, limit release of aerosols to the atmosphere	--

*Includes valve pits, central and feed pump pits, sluice pits, leak detection pits, annulus pump pits, service pits, and catch tank pump pits.

CAM = continuous air monitor
OGT = overground transfer
SST = single-shell tank

Table 5.3.2.20-5. Defense-in-Depth Controls for Transfer System Spray Leaks.* (2 sheets)

Control	Safety function	Comments
1.0 Spray leaks inside process pits*, diversion boxes, vault pits, and cleanout boxes		
1.1 Repositioned jumpers are leak tested with pressurized water (where available) before initiating waste transfers. Cameras lowered through penetrations in the cover block are used to verify initial jumper integrity during the leak test. Where water is not readily available, the jumper leak test is performed during the initial stages of the transfer	Reduce the likelihood of a spray leak from a failed or misaligned jumper	--
1.2 Process pit and vault pit leak detectors and interlocks to waste transfer pumps	Limit duration of spray release. The liquid fraction of the release will drain past the leak detector	Leaks that produce low flow rates of liquid may not be detected
1.3 Catch tank weight factor instrumentation (for leaks inside diversion boxes)	Limit duration of spray release	The liquid fraction of spray leaks inside diversion boxes drain to catch tanks. The WF instrumentation will eventually detect the leak
1.4 Material balances (performed periodically during waste transfers)	Limit duration of spray release	Material balances are typically performed by comparing level changes in the source and receipt tanks and adjusting for line holdup. The material balances will eventually discover the discrepancy caused by the spray leak
1.6 COB leak detectors (where they exist)	Limit duration of release	More effective when COB cover is on
1.7 COBs on some slurry lines from the 242-A Evaporator have been upgraded. The cleanout lines were sealed with a flange, and a gasketed and bolted fit flange assembly replace the old sheet metal lid. The flange assembly is vented through an HEPA filter to remove radioactive particulates. A pressure gauge is provided to alert workers of a buildup of pressure within the COB	The upgraded design items provide confinement in the event of a spray	--
1.8 COBs drain to slurry line encasements	Prevent filling and pressurizing of the COB	--
2.0 Spray leaks from encasement risers (pipe-in-pipe transfer lines)		
2.1 Encasement leak detectors and interlocks with waste transfer pumps (where available)	Ensure transfer pump is shutdown upon detection of leak from primary transfer pipe. Prevents pressurization and potential spray leak from test riser	--
2.2 Process pit leak detector and transfer pump interlocks	Ensure transfer pump is shutdown upon detection of leak from primary transfer pipe. Prevents pressurization and potential spray leak from test riser	Encased transfer lines between tank farms have encasement leak detectors. Encased lines running within a tank farm generally do not. For encased lines running within a tank farm, process pit leak detectors are relied on to shut down transfer pumps should the primary line leak
2.4 Material balances are performed periodically during waste transfers	Limit duration of release that fill and pressurize encasement line	--

Table 5.3.2.20-5. Defense-in-Depth Controls for Transfer System Spray Leaks.* (2 sheets)

Control	Safety function	Comments
3.0 Spray leaks from raw water systems due to backflow of waste		
3.1 Isolation valves; two manual valves are closed to isolate the flush system when not in use	Prevent backflow of waste into the raw water supply	Isolation valves are not effective at preventing backflows during flushing operations as the valves will be open
3.3 Check valves	Prevent backflow of waste into the raw water supply	--
3.4 Quick disconnect (for salt well systems)	Provide seal to prevent spray to atmosphere when temporary raw water line disconnected	--
3.5 Valve position limit switches/interlocked to transfer pump(s)	Prevent backflow of waste into raw water supply	Permissive allows waste transfer pump to operate only when the isolation valves are closed
4.0 Spray leaks from single-shell tank overground transfer lines		
4.1 Encasement leak detectors	Will eventually detect small leak from primary line that may be producing a spray	--
4.2 Periodic material balances during transfer	May eventually detect spray leak from primary line	--
4.3 Heat trace	Prevent freezing, potential rupture of primary line	--
4.4 Insulation	Prevent freezing, potential rupture of primary line. Also provides additional mitigative barrier to spray release	--
4.5 Primary EPDM pipe	Designed to minimize potential for a leak	--
4.6 Radiation monitors may be used along OGT route	Detect leaks from OGT system.	--
4.7 Raw water radiation monitors	Detect contamination of raw water system	--
4.8 Encasement leak detectors	Backup pit leak detectors	--
5.0 Spray leaks inside the 204-AR Waste Unloading Facility		
5.1 Ventilation system HEPA filters	Remove radioactive aerosol particulates generated in the spray from the exhaust air	--
5.2 Catch tank ventilation system deentrainer and heater	Removing moisture reduces the relative humidity of air exhausted from catch tank area. These items prevent moisture plugging of downstream HEPA filters	The potentially pressurized portion of piping in the facility where spray leaks could occur is near the catch tank vent inlet
5.3 Mechanical equipment room and unloading area CAMs	May detect spray leak. Alarm will result in manual shutdown of transfer pumps	--
5.4 High DP alarms across HEPA filters/interlocked with exhaust fan	Indicate plugging of HEPA filters, which could be caused by aerosols generated in a spray leak	--
5.5 Low DP alarms across HEPA filters	Indicative of gross breakthrough of filter, which could result in an unmitigated release of aerosols	--

*Some of the controls is this list may be determined to be Safety-Class or Safety-Significant for other accidents

CAM = continuous air monitor
COB = cleanout box
DP = differential pressure
EPDM = ethylene-propylene-diene monomer
HEPA = high-efficiency particulate air (filter)
OGT = overground transfer
WF = weight factor

5.3.2.21 Spray Leak from Underground Waste Transfer Lines.

Purpose of Analysis: Tank waste is routinely pumped through underground waste transfer lines. The majority of the underground transfer lines are double-contained piping systems. Other transfer lines are contained within concrete encasements or are directly buried. A construction excavation accident involving powered digging equipment (e.g., a backhoe) could conceivably breach waste transfer piping resulting in the formation of either a spray release or surface pool.

Analysis Strategy: Analyses of surface pools and spray leaks are presented in Sections 5.3.2.18 and 5.2.3.20. Initiating events considered are related to transfer piping equipment failures (e.g., valve failure) and associated human errors (e.g., jumper misalignment). This analysis evaluates damage to underground transfer piping by powered digging equipment associated with excavation activities as the initiating event. The consequence calculations presented in Section 5.2.3.20 for scenarios assuming no controls are judged to be both bounding and representative of spray leaks and surface pools initiated by an excavation accident.

5.3.2.21.1 Accident Scenario Assuming No Controls.

Sequence of Events. It is postulated that construction activities in the vicinity of a waste transfer line require powered digging equipment to uncover a portion of an underground utility. It is assumed that an error occurs such that the transfer line is not properly identified and located. The digging equipment is assumed to strike and breach the transfer line. It is assumed that either a transfer is in progress at the time of the excavation or that a transfer is started before the repair is made. No credit is taken for corrective action on the part of the equipment operator. Depending on the extent of the damage, either a spray or pool is assumed to occur.

It is not possible to determine prior to the actual event whether this accident will result in the formation of a surface pool or a spray release. From a probability standpoint both outcomes are equally likely. However, a spray release resulting in the aerosolization of large quantities of material in the respirable particle range is considered the most limiting scenario. Because both types of releases are equally likely outcomes of the accident and because the spray release bounds the consequences of both, the spray release scenario was chosen for analysis.

No differentiation is made regarding the type of transfer line damaged by the digging equipment. It is assumed that the damage is sufficient to breach direct-buried pipes: both the secondary and primary pipes of double-contained piping systems, and both the concrete encasement and primary pipe of concrete-encased systems. Note, however, that the consequences referenced in Section 5.3.2.21.2, "Accident Scenario Assuming Controls", are based on aging waste, which would only be transferred through double-contained piping systems.

The scenario assuming no controls is judged to fall within the "anticipated" frequency category. This judgment is based on reported incidents of inadvertent damage to subsurface utilities and services caused by excavation activities.

Results Summary. The onsite and offsite radiological and toxicological consequences of either a spray leak or a surface pool resulting from an excavation accident are bounded by those calculated for a valve pit spray leak (Section 5.3.2.20).

Implication of Results. The radiological consequences to the onsite and offsite receptors exceed the risk guidelines for the spray leak scenario. The toxicological consequences to the onsite receptor exceed the risk guidelines for the spray leak scenario. Consequently, safety structures, systems, and components and/or Technical Safety Requirement controls are required.

5.3.2.21.2 Accident Scenario Assuming Controls.

Sequence of Events. The controls selected for spray leaks and surface pools initiated by excavation activities are presented in Section 5.3.2.21.4, "Controls." The controls prevent the event by ensuring that powered digging equipment is not used in the vicinity of transfer lines.

5.3.2.21.3 Key Assumptions.

Important to Accident Frequency. No key assumptions are associated with accident frequency.

Important to Accident Consequences. It is assumed that the consequences of spray leaks and surface pools initiated by excavation activities are bounded by events initiated by other mechanisms as analyzed in Section 5.3.2.20.

5.3.2.21.4 Controls.

Safety Structures, Systems, and Components. No safety structures, systems, and components are required for the spray leak from underground waste transfer lines scenario.

Technical Safety Requirement Controls. Table 5.3.2.21-1 lists the Technical Safety Requirement controls selected to prevent spray leaks and surface pools initiated by excavation activities.

In addition to the preventive controls, a mitigative control was elevated to Technical Safety Requirement status on the basis of the severity of the consequences calculated for the scenario assuming no controls (see Key Element 3 in Table 5.3.2.21-1).

Defense-in-Depth. The Defense-in-Depth controls for the spray leak from underground waste transfer line scenario are identified in Table 5.3.2.21-2 along with the respective safety functions and additional comments, as appropriate.

Table 5.3.2.21-1. Technical Safety Requirement Controls for Spray Leak and Surface Pools from Underground Waste Transfer Lines.

Control	Safety function	Comments
Excavation Control Program Key elements: 1. An excavation permit shall be required when excavating in areas where waste transfer lines exist. Key requirements of the permitting process shall include: a. Composite map for the planned excavation site b. Radiological evaluation of the planned excavation activity c. Physical marking of ground surface d. Approval of the proposed excavation by the tank farm cognizant facility engineer and the facility manager or delegate e. Hand-digging only is allowed within approximately 5 ft of a waste transfer line	Prevents leaks in waste transfer lines caused by excavation activities by ensuring: • Excavation activities are not inadvertently performed near waste transfer lines • Excavation activities are carefully controlled when required near waste transfer lines	
2. Waste transfers shall not be conducted in transfer lines located within approximately 15 ft of ongoing excavation activities	Prevents leaks in waste transfer lines caused by excavation activities by ensuring that excavation activities are not performed near waste transfer lines during waste transfers	
3. The excavation supervisor shall ensure that communication systems are available at the job site and that the excavation crew knows how to contact tank farm operations immediately upon indication of a waste transfer leak or other abnormal situation	Mitigates waste transfer leaks caused by excavation activities by prompt shutdown of the waste transfer pump	Calculation note S-CLC-G-00132 calculates the consequences of 40-min spray. Although reduced, the radiological consequences still exceed risk guidelines for the bounding spray leak source term
4. Aboveground labelling of waste transfer lines outside of tank farm fences	Prevents leaks in waste transfer lines caused by excavation activities by ensuring that excavation activities are not inadvertently performed near waste transfer lines outside of tank farms	
5. Waste transfer through lines uncovered by excavation activities shall be prohibited unless radiation protection controls are established, approved, and implemented that replace the shielding provided by the removed soil	Prevents transfers through waste transfer lines that are uncovered by excavation activities that could cause worker radiation doses exceeding limits established by the radiation protection program	This control was selected based on worker safety considerations

Table 5.3.2.21-2. Defense-in-Depth Controls for Spray Leak and Surface Pools from Underground Waste Transfer Lines.

Control	Safety function	Comments
Material balances (performed periodically during waste transfers)	Limit duration of spray release or size of surface pool	Material balances are typically performed by comparing level changes in the source and receipt tanks and adjusting for line holdup. The material balances will eventually discover the discrepancy caused by the spray leak

5.3.2.22 Tank Bump.

Purpose of Analysis: The purpose of this analysis is to provide a bounding estimate of consequences resulting from a tank bump so that controls necessary to maintain risk at acceptable levels can be defined. The thermal phenomenon known as a tank bump occurs when steam stored in the waste causes a waste rollover and a rapid pressurization of the tank headspace. If the waste contains a sufficient heat load, steam bubbles are trapped in sludge and then suddenly released to the tank dome space because of buoyant instabilities. A tank bump is a safety concern because of the potential for a release of aerosolized waste to the environment.

Analysis Strategy: For a tank bump to occur, the waste temperature must be at or above the local saturation temperature; this requires a heat generation rate greater than 7,600 W (26,000 Btu/h), assuming no active ventilation. Saturation temperature of tank liquid waste is 104 °C (220 °F) at atmospheric pressure because of dissolved salt content in the waste, as discussed in WHC-SD-WM-ER-198, *Development of a Dynamic Computer Simulator for Aging Waste Tank Operations and Safety Assessment*. At heat generation rates below 7,600 W (26,000 Btu/h), sufficient heat is transferred by natural conduction to the surrounding soil to maintain waste temperature below 104 °C (220 °F).

An amount of sludge is also required for a tank bump to occur. Tank sludge contains the highest density of heat-producing isotopes, is generally nonconvective, and is highly viscous. The heat source in sludge provides a location for steam to generate. The high viscosity of the sludge contributes to the nonconvective nature. The high viscosity and hydrostatic head trap the steam generated in the sludge.

Tanks containing higher waste levels will result in higher tank bottom pressures so that the corresponding saturation temperature will be higher. This means that the energy stored before a bump will be higher and the bump, should it happen, will be stronger. However, higher temperatures will have to be reached in tanks with higher waste levels before steam begins to form.

Hanford Site waste tanks that presently have a heat generation rate of 7,600 W (26,000 Btu/h) or higher and contain sludge are Tank 241-C-106; Tank 241-A-104; Tank 241-A-105; Tank 241-SY-101; several tanks in the 241-AN, 241-AP, and 241-SX tank farms; and the aging waste facility (AWF) tanks. Tanks 241-A-104 and 241-A-105 are not considered to have the proper initial conditions for a tank bump because they have been without active ventilation for several years and the waste temperatures have stabilized well below 104 °C (220 °F).

The AWF tanks currently represent the upper bound on heat load and radionuclide content (i.e., dose contributor) for the tanks that pose a tank bump threat. AWF Tank 241-AZ-101 has nearly twice the heat load of any other AWF tank. Therefore, a postulated tank bump in Tank 241-AZ-101 is used as the bounding accident analysis.

A steam release is similar to a tank bump in that both involve the release of pressurized steam, but the tank bump involves a waste rollover with much greater quantities of steam released into the tank vapor space. A tank bump event is bounding for any steam release events.

5.3.2.22.1 Accident Scenario Assuming No Controls. For the accident scenario assuming no controls, it is postulated that active ventilation for Tank 241-AZ-101 is lost for an indefinite amount of time, and tank temperatures begin to rise without detection. No intervention is undertaken to remove potential heat sources (e.g., mixer pumps) or to provide alternate waste cooling methods (e.g., water addition). The temperature of the tank waste is postulated to rise above local saturation throughout the tank.

Heat builds up in the sludge as energy produced by radioactive decay of fission products is released. Heat input from other sources is not considered. As the waste material reaches the local saturation temperature, steam is generated. The steam is trapped in the sludge because of the high viscosity of the sludge and the hydrostatic head.

Sufficient steam is assumed to be generated that the sludge becomes buoyant and the hydrostatic head is overcome. Alternatively, some physical mechanism (agitation of the sludge through an external mechanism) provides the stored steam with a release path or enhances the buoyancy of the sludge.

The released steam travels through the overlaying supernate and carries a significant amount of sludge with it. This results in the steam and high heat sludge contacting the supernate. The heat stored in the sludge and steam is transferred to the supernate. This heat transfer condenses the steam and raises the temperature of the supernate. The cycle then begins again at a higher temperature. If the tank supernate is already at or near saturation, the steam will not condense but will travel completely through the supernate to the tank headspace. As the steam travels through the supernate, the mass of steam increases from two mechanisms. First, because of the reduction in hydrostatic head, supernate that was held in the liquid phase by the pressure flashes to steam. Second, supernate that was already at local saturation absorbs heat from the superheated sludge and flashes to steam. The steam mass increase results in a pressure increase of the tank headspace. Steam volume is also increased from expansion of the steam bubbles as the static head to which they are subjected decreases. In addition, the heat and steam produce fluid velocities high enough to carry liquid and solid particles into the tank risers. All pump pit and sluice pit cover blocks are postulated to be off during this time. Vapor and particles are released to the environment through unfiltered pathways.

The Tank 241-AZ-101 waste conditions were modeled with the GOTH thermal hydraulics computer code, a transient computer program used to model multi-phase flow (WHC-SD-WM-CN-022, *Evaluation of Potential and Consequences of Steam Bump in High-Heat Waste Tanks and Assessment and Validation of GOTH Computer Code*). The release quantities provided by the GOTH computer model had two distinct components. The first component is the release caused by fluid dynamics (i.e., the event produces fluid velocities such that the waste is carried out the open riser by momentum). The second component is the release caused by pressurization effects (i.e., the increase in the tank headspace pressure above atmospheric pressure forces waste out of the tank to

a region of lower pressure). In reality, the tank risers are covered with either equipment (e.g., pumps) or flanges that are bolted in place. The only release pathway is through pit drain lines. Because of bends in the pit drain lines, very little of the fluid dynamic portion of the release is actually expected to occur. Inclusion of the fluid dynamic portion of the release, therefore, is conservative.

The scenario without controls is assigned a frequency of "unlikely" on the basis of initiating event frequency and heating of tank waste without detection and intervention. Given current Tank 241-AZ-101 waste conditions, a ventilation outage of approximately 90 days would be required for vapor generation to occur (WHC-SD-WM-CN-022). Extreme conditions (e.g., an earthquake) would be necessary to cause such an extended outage.

Results Summary. The onsite and offsite radiological and toxicological consequences of a tank bump are presented in Table 5.3.2.22-1. The associated calculations are documented in WHC-SD-WM-CN-043, *Tank Bump Consequence Analysis*.

Implications of Results. The accident consequence results indicate that the onsite radiological and toxicological consequences for the tank bump accident exceed risk guidelines. Therefore controls are required.

5.3.2.22.2 Accident Scenario Assuming Controls. The controls selected for the tank bump scenario are preventive in nature and are presented in Section 5.2.3.22.4, "Controls." These controls prevent tank waste from reaching saturation temperatures, thereby precluding the tank bump event. Tank waste is prevented from reaching saturation temperatures by the monitoring of tank waste temperatures. Should a rising temperature trend be detected, the controls provide a minimum of one week during which time potential heat sources (e.g., mixer pumps) would be eliminated, or waste cooling techniques (e.g., ventilation, water addition) would be initiated.

5.3.2.22.3 Key Accident Scenario Assumptions.

Important to Accident Frequency. The unmitigated accident frequency was assumed to be "unlikely" on the basis of the postulated occurrence of a major event that could preclude restart of active ventilation systems within 25 days. The 25-day recovery period was based on Tank 241-AZ-101 initial temperature being approximately 200 °F (93 °C). The calculated heat up of Tank 241-AZ-101 is 0.9 °F per day. Most double-shell tanks also contain a large hydrostatic head. At 4.6 m (15 ft) of hydrostatic head, the saturation temperature increases approximately 12 °C (20 °F). Therefore, a higher allowable temperature of 105 °C (220 °F) can be assumed at waste depths greater than 4.6 m (15 ft). Because the single-shell tanks of concern do not contain large hydrostatic heads and cannot receive additional transfers, the lower temperature limit applies to the entire waste volume. Higher initial tank temperature would require a shorter recovery period.

Important to Accident Consequences. The radiological composition of the waste in the tank bump scenario was assumed to be that of AWF tank liquids and solids, and the toxicological composition of the waste was conservatively assumed to be equivalent to double-shell tank liquids and solids.

5.3.2.22.4 Controls.

Safety Structures, Systems, and Components. The Safety-Significant structures, systems, and components selected to prevent or mitigate the risk from tank bumps are listed in Table 5.3.2.22-2. No structures, systems, and components were determined to be Safety-Class.

Technical Safety Requirement Controls. The Technical Safety Requirement controls selected to prevent tank bumps are listed in Table 5.3.2.22-3. The controls selected also provide protection against a postulated "chemical runaway" accident (Section 5.3.2.17). For each Technical Safety Requirement control, the safety function is described and additional comments are provided as appropriate.

Defense-in-Depth. In addition to the structures, systems, and components and Technical Safety Requirements identified in Table 5.3.2.22-3, other engineering and Administrative Controls provide the public and workers with further Defense-in-Depth protection against the risk of tank bumps. The Defense-in-Depth controls are identified in Table 5.3.2.22-4 along with the safety function and additional comments, as appropriate.

5.3.2.22.5 References.

WHC-SD-WM-CN-022, 1996, *Evaluation of Potential and Consequences of Steam Bump in High-Heat Waste Tanks and Assessment and Validation of GOTH Computer Code*, Rev. 0-B, Westinghouse Hanford Company, Richland, Washington.

WHC-SD-WM-CN-043, 1996, *Tank Bump Consequence Analysis*, Rev. 2, Westinghouse Hanford Company, Richland, Washington.

WHC-SD-WM-ER-198, 1994, *Development of a Dynamic Computer Simulator for Aging Waste Tank Operations and Safety Assessment*, Rev. 0, Westinghouse Hanford Company, Richland, Washington.

Table 5.3.2.22-1. Consequences of a Tank Bump Assuming No Controls.

Consequences	Onsite dose/exposures		Offsite dose/exposure	
	Calculated dose	Risk guideline	Calculated dose	Risk guideline
Radiological	2,500 mSv (250 rem)	50 mSv (5 rem)	2.2 mSv (0.22 rem)	5 mSv (0.5 rem)
Toxicological (SOF)	4,900	1 (ERPG-2)	0.73	1 (ERPG-1)

ERPG = Emergency Response Planning Guideline
mSv = millisievert
SOF = sum-of-fractions

Table 5.3.2.22-2. Safety Structures, Systems, and Components for Tank Bumps.

Structures, systems, or components	Safety classification		Safety function	Comments
	SC	SS		
Tank waste temperature monitoring system (241-C-106; 241-SX-103, 107, 108, 109, 110, 111, 112, 114; all double-shell tanks; and all aging waste facility tanks)		X	Monitor tank waste temperature to provide operators with information on the existing temperatures in the waste so that necessary actions can be taken to prevent reaching temperatures at which tank bumps or steam release events could occur	A steam release event is a specific type of tank bump Also provides protection against a postulated "chemical runaway" accident (Section 5.3.2.17)
Tank waste level detection system (double-shell tanks and aging waste facility tanks)		X	Monitor tank waste level to support implementing the tank temperature controls	Also provides protection against a postulated "chemical runaway" accident (Section 5.3.2.17)

SC = Safety-Class
SS = Safety-Significant

Table 5.3.2.22-3. Technical Safety Requirement Controls for Tank Bumps.

Control	Safety function	Comments
1.1 Tank waste temperature monitoring system (and, if required, level detection system) shall be operable with the following tank waste temperature limits: For SSTs, ≤ 96 °C (205 °F) For DSTs and AWF tanks, ≤ 91 °C (195 °F), for all waste levels OR ≤ 91 °C (195 °F) in the top 15 ft of the waste AND ≤ 102 °C (215 °F) in the waste below 15 ft	Ensure that tank waste temperature monitoring system (and, if required, tank waste level monitoring system) is operable and that temperatures at which a tank bump or steam release event could occur are not reached	The specific waste temperature limits for SSTs and DSTs/AWF tanks were established during the development of the TSRs by the accident analysts and operations personnel Temperatures must be maintained below those that could result in a tank bump or steam release Control also provides protection against a postulated "chemical runaway" accident (Section 5.3.2.17)
1.2 AC ensures that waste transfers do not result in DST or AWF tanks with high sludge level and high heat load where ventilation system failure could result in tank bumps	Prevent the development of tanks with a high tank sludge level and high heat load where if tank cooling were lost a tank bump could occur prior to restoration of tank cooling (i.e., a tank outside the safety envelope)	Control also provides protection against a postulated "chemical runaway" accident (Section 5.3.2.17)
1.3 Process instrumentation and measuring and testing equipment	Ensures instrumentation used to monitor temperature is maintained	Control also provides protection against a postulated "chemical runaway" accident (Section 5.3.2.17)

AC = Administrative Control
AWF = Aging Waste Facility
DST = double-shell tank
SST = single-shell tank
TSR = Technical Safety Requirement

Table 5.3.2.22-4. Defense-in-Depth Controls for Tank Bumps.

Control	Safety function	Comments
Active ventilation or other heat removal mechanisms shall be maintained	Maintain sludge and supernatant temperatures below the required control levels for tanks with a potential for tank bump	Control also provides protection against a postulated "chemical runaway" accident (Section 5.3.2.17)
Sludge mixing by in-tank mixer pump or other mechanisms could be used	Render the sludge incapable of storing steam	Effects of heat contribution from mixer pumps would require evaluation prior to use
Pump pit and sluice pit cover blocks shall be in place whenever the conditions for initiation of a tank bump are present (i.e., active ventilation system down indefinitely)	Provide containment and confinement function in the event of a tank bump and limit onsite and offsite radiological and toxicological exposures	Control also provides protection against a postulated "chemical runaway" accident (Section 5.3.2.17)
Emergency Response Plan/ Procedures shall be in place and implemented in response to emergency conditions resulting from a tank bump	Protect onsite personnel and facility workers from unnecessary radiological and toxicological exposure in the event of a tank bump	Emergency response plan identified as an Interim Operational Safety Requirement Administrative Control for other accidents Control also provides protection against a postulated "chemical runaway" accident (Section 5.3.2.17)

This page intentionally left blank.

5.3.2.23 Natural Phenomena. Requirements in DOE 5480.23, *Nuclear Safety Analysis Reports*, and the associated implementing guidance in DOE-STD-3009-94, *Preparation Guide for U.S. Department of Energy Nonreactor Nuclear Facility Safety Analysis Reports*, mandate that accidents initiated by natural phenomena are to be considered in safety analysis accident analyses. Natural phenomena accident assessments differ from the assessments of accidents with other initiators. Natural phenomena assessments must address specific design (or evaluation) performance goals for new and existing systems, structures, and components depending on the potential consequences of accidents as outlined in DOE 5480.28, *Natural Phenomena Hazards Mitigation*[1], and summarized for the Hanford Site in Appendix C, "Site Characteristics," Table C1-33. DOE 5480.28 invokes the requirements of the following standards:

- DOE-STD-1020-94, *Natural Phenomena Hazards Design and Evaluation Criteria for Department of Energy Facilities*
- DOE-STD-1021-93, *Natural Phenomena Hazards Performance Categorization Criteria for Structures, Systems, and Components*
- DOE-STD-1022-94, *Natural Phenomena Hazards Site Characterization Criteria*
- DOE-STD-1023-95, *Natural Phenomena Hazards Assessment Criteria*
- DOE-STD-1024-92, *Guidelines for Use of Probabilistic Seismic Hazard Curves at Department of Energy Sites.*

Table 5.2-4 summarizes the natural phenomena analyzed as accident initiators in the TWRS facilities. A number of potential accidents were postulated for each natural phenomenon listed in Table 5.2-4 and were assigned to the consequence and frequency categories as discussed earlier in this chapter. Based on the hazards evaluation and accident analysis selection process, accident types initiated by high wind, lightning, and seismic events were selected for further analysis as summarized in the following subsections. The seismic load, wind load, and lightning strike frequencies are consistent with those found in Appendix C, Table C1-33.

5.3.2.23.1 High Wind. High winds at TWRS pose a natural phenomenon hazard because winds could initiate single or multiple accidents from a common cause. Straight winds and tornadoes at the Hanford Site are characterized in Appendix C, Section C1.4, "Environmental Description."

Purpose of the Analysis: Accidents initiated by high winds are assessed to establish the need for and effectiveness of safety SSCs and TSRs. To assure the level of conservatism is appropriate for facility characteristics such as hazards to people and the environment as well as cost, DOE-STD-1020-94, provides guidance for facility-appropriate design wind speeds depending on the facility hazard category and Performance

[1]Although DOE 5480.28 has been rescinded, the contractor is obligated by the existing contract to meet the requirements in this order. DOE 420.1, *Facility Safety*, replaces DOE 5480.28 and contains the same natural phenomena requirements.

Category of equipment. For existing category 2 facilities with Performance Category 3 equipment such as the underground storage tanks, a straight "fastest mile" wind speed of 70 mph and a return frequency of 10^{-3}/yr is used for the evaluation basis (Appendix C, Table C1-33). Analysis of wind-blown missiles is not required by DOE-STD-1020-94, for existing category 2 facilities with Performance Category 3 equipment. More severe wind speeds are considered only in Beyond Evaluation Basis Accident assessments.

For the accidents considered herein, wind gusts rather than straight winds are appropriate to characterize accident likelihoods. High wind gusts are expected events at the Hanford Site as shown in Table 5.3.2.23.1-1. Wind gusts in excess of 100 km/h have been experienced during every month of the year, with the highest wind gusts recorded at the Hanford Meteorological Station (mid-way between the 200 E and 200 W tank farm areas) of 129 km/h in January 1972 and January 1990.

Analysis Strategy: A number of potential wind-related accidents were identified by the hazards analysis. On the basis of hazards evaluation and accident analysis selection process, three accidents initiated by high wind were selected for further analysis. The associated accident scenarios involve (1) the transport of waste samples, (2) the collapse of a crane boom, and (3) a tear or puncture of a flexible receiver bag. These scenarios are discussed below.

Accident Scenarios Assuming No Controls. The three wind scenarios identified previously are analyzed as independent accidents because it is unlikely that a single wind storm would initiate all three accidents. However, the likelihood of any of the wind-initiated accidents without controls is the sum of the likelihoods of the three accidents presented which is in the "anticipated" frequency bin.

Part A. Sample Cask Transport Vehicle Crash. Tank waste samples are routinely collected and sent to onsite laboratories for sample analysis and waste characterization. Once collected, waste samples are placed in either an onsite transport cask or a pig, and then loaded onto a transport vehicle. Once loaded onto the transport vehicle, "ownership" of the waste transfers from TWRS to Transportation and Packaging. The containers are transported using WHC-SD-TP-SARP-002, *Safety Analysis Report for Packaging (On-site) Onsite Transport Cask*, as the safety and Authorization Basis for the onsite transport cask or WHC-SD-TP-SARP-001, *Sample Pig Transport System Safety Analysis for Report Packaging (On-site)*, for pigs. Each document shows compliance with the transport performance standards of 10 CFR 71, "Additional Requirements for Type B Packages," through either cask design or a combination of cask design and administrative controls. Accident assessments, including potential failure mechanisms for the containers (crush, puncture, fire) are documented explicitly in the safety analysis reports for packaging. Because the safety analysis reports for packaging provide the Authorization Basis for cask and pig transport, their transport is not considered further in this BIO.

Part B. Crane Boom Collapse in High Winds.

- **Sequence of Events**—This scenario postulates that a mobile crane operating with heavy loads in a tank farm is subjected to a high wind gust. The gust collapses the crane boom and causes the crane load to fall on an underground waste storage tank riser. In turn, the riser then punctures the tank dome. The contribution of the crane boom collapse to the load impact is uncertain. The boom would absorb energy during its deformation, but depending on its failure mode, could also add to the total impact. Because of the uncertainty in impact load, the consequences of the crane boom collapse and dome puncture are assumed bounded by the drop of a mixer pump in a pit as analyzed in Section 5.3.2.13.

  The frequency of occurrence of the wind-induced failure was estimated qualitatively based on (1) a conservative crane drop frequency of 3×10^{-4} per lift, and (2) an assumption that no more than five percent of such drops are related to high winds. This assumption is believed conservative because available failure statistics do not show any wind-induced failures, perhaps because crane lifts are usually not performed in high winds. Using an estimated 1,000 heavy lifts per year above underground tanks results in a drop frequency without controls of 1.5×10^{-2}/yr. Finally, it is estimated that no more than ten percent of the load drops would hit risers and cause a puncture of the dome. This estimate is based on crane operators' tendency to avoid areas with potentially vulnerable equipment below and to minimize the length of load paths for heavy loads. Although the collapse of the crane boom could increase the impact area over the tanks and thereby increase the likelihood of impacting a tank riser, the collapse would also distribute the impact over a larger area and may not have enough impact to cause a riser to puncture the dome. Therefore, the likelihood of a wind-induced drop of a heavy load without controls that results in a punctured tank dome is estimated as 1.5×10^{-3}/yr or in the "unlikely" frequency category.

- **Results Summary**—The onsite and offsite radiological and toxicological consequences of the wind-induced crane boom collapse is represented and bounded by the consequences of the drop of a mixer pump in a pit. Mixer pump analysis is located in Section 5.3.2.13. The crane boom collapse resulting in the puncture of a riser through the tank dome is considered more likely than the drop of a mixer pump in a pit because of the number of heavy lifts over the tanks, and the consequences of the punctured dome would be less severe than the drop of a mixer pump in a pit.

- **Implications of Results**—Because the scenario assuming no controls exceeds the onsite toxicological risk guidelines, controls are required.

Part C. Flexible Receiver Bag Failure. A flexible receiver is an engineered system of components used to wash, contain, transport, and dispose of contaminated equipment upon removal from underground waste storage tanks. The flexible receiver is bolted onto a 4-in. or 6-in. tank riser and is

supported by four hydraulically controlled legs that rest on the ground surface above the tank dome. The first flexible receiver station above the riser contains a spray ring that uses high pressure water to wash contaminates from the equipment;contaminated wash-water drains back to the underground tank. The equipment is then withdrawn through a pipe spool into a flexible receiver bag that provides containment of the contaminated equipment. The cylindrical receiver bag is initially folded (like an accordion), and then unfolds as a crane withdraws the equipment from the tank riser. The bag is sealed at the top, and as the equipment is withdrawn above the tank riser, the bottom is sealed with a cable. Cutters then separate the flexible bag from unused bag material. The flexible receiver bag inflates with air that is drawn from the tank headspace, through the riser, and to the washing station. When used on a tank that is ventilated actively and drawn down to a slight vacuum, the bag tends to collapse around the instrument with a minimum of air inflation. The flexible receiver bags are made of an abrasion-resistent, tear-resistent fabric.

- **Sequence of Events**—A wind-induced failure of a flexible receiver bag containing contaminated equipment removed from an underground waste storage tank was postulated. Failure of the flexible receiver bag occurs when the equipment has been withdrawn above the riser and just prior to sealing the bottom. High winds cause the crane and supported equipment to swing and tear or puncture the bag in the area where the bottom seal would have been placed. Because the equipment is fully withdrawn, it offers no resistance against the riser, and only moderate resistance by the bag guide rods. The maximum amount of contaminates is present when the equipment is fully withdrawn.

  During preoperational testing, crane operators reported difficultly in precisely positioning a loaded flexible receiver in winds greater than about 32 km/h (20 mph). For winds up to 64 km/h (40 mph), it is assumed crane operators could manage a loaded flexible receiver if necessary. For wind gusts at 97 km/hr (60 mph) it is assumed a loaded flexible receiver would be essentially out of control. Therefore, it is assumed that winds gusts of 97 km/h (60 mph) are sufficient to cause the flexible receiver to swing and puncture or tear the fabric. As listed in Table 5.3.2.23.1-1, such wind gusts occur once every 2 years. Operations estimate that flexible receivers withdraw equipment no more than 24 days per year. Without administrative controls, the combined frequency of operating the flexible receiver and having wind speeds of 97 km/hr (60 mph) is then

  Frequency = (1 high wind/2 yr) (24 days operation/365 days per year)
  $= 3 \times 10^{-2}$ occurrences per year ("anticipated").

- **Results Summary**—The onsite and offsite radiological and toxicological exposures for the flexible receiver bag failure are shown in Table 5.3.2.23.1-2. The supporting calculations are documented in WHC-SD-WM-CN-061, *Releases from Failure of a Flexible Receiver Bag in High Winds.*

- **Implications of Results**—Because the scenario consequences assuming no controls are within the risk guidelines, no safety SSC or TSR controls are required. However, Defense-in-Depth controls are identified.

Accident Scenario Assuming Controls. Assuming controls are in place to preclude crane activities in high wind, and assuming the controls work as intended, the crane boom collapse accident is prevented. The flexible receiver bag failure accident without controls is within the risk guidelines; therefore, a case with controls was not calculated.

Key Accident Scenario Assumptions.

Important to Accident Frequency. For the collapse of the crane boom in high winds, the following key assumptions apply:

- As many as 1,000 lifts of heavy equipment and cover block occur over the tanks per year (note that as many as 6,000 lifts could occur per year and still remain within the "unlikely" frequency category)
- The number of crane drops per lift is 3×10^{-4}, and 5% of these are related to wind
- The likelihood of hitting a riser and puncturing the riser through the dome given a load drop is 0.1.

There are no key assumptions important to accident frequency for the flexible receiver bag failure scenario that is in the "anticipated" frequency category.

Important to Accident Consequences. For the collapse of the crane boom in high winds, see key assumptions in Section 5.3.2.13.

For the failure of a flexible receiver in high winds, the following key assumption applies:

- For the scenario assuming no controls, the source term associated with the flexible receiver bag failure assumes a pre-accident maximum radiation field of 10 R/h on contact with the receiver bag. However, because the controls identified for the flexible receiver bag scenario are preventive in nature, the contact dose rate is not a critical parameter.

High Wind Controls. High wind controls are outlined below and apply to all mobile crane activities.

Safety SSCs. No Safety-Class or Safety-Significant SSCs are associated with high winds.

TSR Controls. TSRs for operations in high winds are given in Table 5.3.2.23.1-3. Mobile crane activities used for lifting cover blocks from pump and valve pits and for supporting equipment being installed or removed from waste tanks are managed through compliance with DOE/RL-92-36, *Hanford Site Hoisting and Rigging Manual*, with close coordination of Tank Farm

operations. The manual requires wind speed be considered before starting a lift and prohibits lifts if weather conditions are adverse to safe load-handling operations.

Defense-in-Depth. Procedures provide Defense-in-Depth protection against consequences of a flexible receiver bag failure. Use of the flexible receiver constitutes a critical lift subject to the requirements of DOE/RL-92-36, including the requirement that wind speed be considered before starting a lift (Table 5.3.2.23.1-4).

References

10 CFR 71, "Additional Requirements for Type B Packages," *Code of Federal Regulations*.

DOE O 420.1, 1996, *Facility Safety*, Change 2, U.S. Department of Energy, Washington, D.C.

DOE 5480.23, 1994, *Nuclear Safety Analysis Reports*, Change 1, U.S. Department of Energy, Washington, D.C.

DOE 5480.28, 1994, *Natural Phenomena Hazards Mitigation*, U.S. Department of Energy, Washington, D.C.

DOE/RL-92-36, 1993, *Hanford Site Hoisting and Rigging Manual*, U.S. Department of Energy, Richland Operations Office, Richland, Washington.

DOE-STD-1020-94, 1994, *Natural Phenomena Hazards Design and Evaluation Criteria for Department of Energy Facilities*, Change 1, U.S. Department of Energy, Washington, D.C.

DOE-STD-1021-93, 1993, *Natural Phenomena Hazards Performance Categorization Criteria for Structures, Systems, and Components*, Change 1, U.S. Department of Energy, Washington, D.C.

DOE-STD-1022-94, 1994, *Natural Phenomena Hazards Site Characterization Criteria*, Change 1, U.S. Department of Energy, Washington, D.C.

DOE-STD-1023-95, 1995, *Natural Phenomena Hazards Assessment Criteria*, U.S. Department of Energy, Washington, D.C.

DOE-STD-1024-92, 1992, *Guidelines for Use of Probabilistic Seismic Hazard Curves at Department of Energy Sites*, U.S. Department of Energy, Washington, D.C.

DOE-STD-3009-94, 1994, *Preparation Guide for U.S. Department of Energy Nonreactor Nuclear Facility Safety Analysis Reports*, U.S. Department of Energy, Washington, D.C.

WHC-SD-TP-SARP-001, 1997, *Sample Pig Transport System Safety Analysis Report for Packaging (On-site)*, Rev. 1A, Waste Management Federal Services Inc., Northwest Operations, Richland, Washington.

WHC-SD-TP-SARP-002, 1998, *Safety Analysis Report for Packaging (On-site) Onsite Transport Cask*, Rev. 1C, Waste Management Federal Services Inc., Northwest Operations, Richland, Washington.

WHC-SD-WM-CN-061, 1996, *Releases from Failure of a Flexible Receiver Bag in High Winds*, Rev. 0, Westinghouse Hanford Company, Richland, Washington.

5.3.2.23.2 Lightning. Lightning strikes at the tank farms are a safety concern because they are potential initiators of in-tank flammable gas deflagrations, organic solvent fires, or organic salt-nitrate reactions. Sections 5.3.2.14, 5.3.2.15, and 5.3.2.17 discuss the consequences of these three accident scenarios. This section addresses the likelihood of accident scenarios initiated by lightning and establishes the basis for lightning controls.

Operational records report no incidence of lightning strikes on a tank riser or appurtenance during the 50-year history of the Hanford Site. However, these records do indicate that a number of lightning strikes have hit 200 East and 200 West Area structures, power poles, and transformers. Recent research on lightning as a potential accident initiator at the tank farms is reported in WHC-SD-WM-ES-387, *Probability, Consequences, and Mitigation for Lightning Strikes to Hanford Site High-Level Waste Tanks*. WHC-SD-WM-ES-387 establishes that, after conservatively accounting for detection frequency and uncertainties, the observed lightning strike frequency at the tank farms is 0.06 strikes/yr/km^2 (0.02 strikes/yr/mi^2).

Accident Scenarios Assuming No Controls. The three lightning scenarios (in-tank flammable gas ignition, organic solvent fire, organic salt-nitrate reaction) have been evaluated independently. Analysis to date suggests accident independence (i.e., an accident of one type is unlikely to lead to another); however, the likelihood of any lightning-initiated accident is the sum of the likelihoods of the three accidents. The sum of the likelihoods places the three scenarios in the "unlikely" frequency category.

Flammable Gases Ignited by Lightning.

- **Sequence of Events**—Lightning is postulated to strike over a tank farm and ignite flammable gases in one or more underground waste storage tanks.

  A gas release event caused by a low pressure weather system that is also accompanied by lightning is considered more likely than a random gas release event and an independent lightning strike. For flammable gas mixtures that require comparatively low energies for ignition, the nominal area of a tank farm is appropriate to bound the area at risk because a strike anywhere over the tank farm could potentially cause ignition of one or more tanks with flammable gas mixtures exceeding the lower flammability limit. The tank farm area is taken to include the fenced area plus a margin around the fence. A factor of 1.5 was applied to the nominal tank farm dimensions (150 m on a side) to account for a margin around the fence. The resulting area is about 0.05 km^2 (225 m on a side). This value conservatively bounds the value of 0.02 km^2 used in WHC-SD-WM-ES-387. Using an area of 0.05 km^2 and an average

frequency of 0.06 strikes/yr/km^2, the likelihood of a strike over a tank farm is 3 x 10^{-3}/yr. Conditional probabilities of the tank farm containing one or more tanks with flammable gas mixtures given the lightning strike also apply.

For the ignition of flammable gases, the lightning strike must occur when flammable gas is present at concentrations above the lower flammability limit in one or more tanks. Such time-at-risk periods may occur randomly from gas release events (GREs) or follow GREs induced by the low-pressure weather system that also causes the lightning. Studies show the combined frequencies of a random GRE and a lightning strike are unlikely (WHC-SD-WM-CN-041, *Tank Farm Deflagration Rates Due to Various Ignition Sources*).

The combined frequencies of a lightning strike and a low pressure weather system causing a GRE with the resultant mixture above the lower flammability limit is not well understood. Observations have shown increased hydrogen concentrations in the headspace of tanks during or after low pressure weather systems but they have never approached the lower flammability limit (WHC-SD-WM-ES-387). The combined frequency was conservatively estimated as 3 x 10^{-5} occurrences per year for each SST farm and 3 x 10^{-4} occurrences per year for each DST farm (WHC-SD-WM-CN-041). Using 12 farms with SSTs and 6 farms with DSTs, the likelihood of a storm causing a GRE and a lightning-initiated ignition of flammable gases is 3.6 x 10^{-4} occurrences per year for SSTs ("unlikely"), and 1.8 x 10^{-3} occurrences per year for DSTs ("unlikely").

- **Results Summary**—The onsite and offsite radiological and toxicological exposures resulting from lightning-initiated flammable gas deflagrations and other initiators are presented in Section 5.3.2.14. The likelihood of lightning initiating flammable gas ignition is categorized as "unlikely."

- **Implications of Results**—The flammable gases ignited by lightning scenario without controls exceeds the risk guidelines, therefore, controls are required.

Organic Solvent Fire Initiated by Lightning.

- **Sequence of Events**—This scenario postulates that a lightning strike ignites an individual underground waste storage tank containing a combustible concentration of organic solvents.

  Using the observed 0.06 strikes/yr/km^2 (0.02 strikes/yr/mi^2) as an estimate of lightning strike frequency, and considering the cross-sectional area of a large underground tank to be bounded by 500 m^2 (5,382 ft^2), the likelihood of a direct strike over a particular tank is 3 x 10^{-5}/yr and can be characterized as "extremely unlikely." This value is considered appropriate for use as an organic solvent initiator where a comparatively high energy is required to ignite the solvent. Assuming 15 tanks are capable of supporting an organic solvent fire (WHC-SD-WM-CN-041) and the likelihood of ignition given a lightning strike is unity, the

expected frequency for all tanks would be 5×10^{-4} fires per year ("unlikely"). Assuming an ignition frequency of one given the lightning strike is conservative because (1) data show lightning strikes at the Hanford Site are less energetic than lightning typical of this latitude (WHC-SD-WM-ES-387), (2) the tank geometry must be favorable to arcing in or near the waste surface, and (3) most energy would preferentially dissipate through the comparatively conductive steel shells, concrete, and rebar.

- **Results Summary**—The onsite and offsite radiological and toxicological exposures resulting from lightning-initiated organic solvent fires are presented in Section 5.3.2.15. The likelihood of lightning initiation an organic solvent fire is categorized as "unlikely."

- **Implications of Results**—The organic solvent fire initiated by lightning scenario without controls exceeds the risk guidelines, therefore, controls are required.

Organic Nitrate-Salt Reaction Initiated by Lightning.

- **Sequence of Events**—This scenario postulates that lightning strikes an individual underground waste storage tank containing organic nitrates and initiates an organic nitrate-salt reaction.

  For the initiation of an organic nitrate-salt reaction, the lightning must strike a tank that can sustain an organic nitrate-salt reaction. As for organic solvent ignition, a direct strike over a particular tank is conservatively assessed at 3×10^{-5}/yr. The likelihood of ignition of organic nitrates given a lightning strike is estimated at 0.1 because (1) data shows lightning strikes at the Hanford Site are less energetic than lightning typical of this latitude (WHC-SD-WM-ES-387), (2) the tank geometry must be favorable to arcing in or near the waste surface, and (3) most energy would preferentially dissipate through the comparatively conductive steel shells, concrete, and rebar. Assuming 10 tanks are capable of supporting an organic nitrate fire (Section 5.3.2.17) and a 0.1 likelihood of a lightning-induced organic nitrate fire, the expected frequency would be 3×10^{-5} fires per year ("extremely unlikely").

- **Results Summary**—The onsite and offsite radiological and toxicological exposures resulting from lightning-initiated organic nitrate-salt reactions and other initiators are presented in Section 5.3.2.17. The likelihood of lightning initiating an organic nitrate-salt reaction is categorized as "extremely unlikely."

- **Implications of Results**—Because the organic nitrate-salt reaction initiated by lightning scenario without controls exceeds the risk guidelines, controls are warranted.

Accident Scenarios Assuming Controls. Controls related to lightning strikes have been identified and are presented in the control section that follows. The ability of these controls to prevent ignition of flammable gas,

organic solvents, or organic nitrate-salt reactions remains uncertain and unquantifiable. Therefore, the scenarios assuming controls are assumed the same as the accidents without controls. Consequences of these scenarios are presented in Sections 5.3.2.14, 5.3.2.15, and 5.3.2.17. The frequency categories for the ignition of flammable gases and organic solvents remain "unlikely," and the frequency category for the initiation of an organic nitrate-salt reaction remains "extremely unlikely." Note that lightning may dissipate without causing an ignition source if the strike point is well grounded to the underground tank system or away from the tanks.

Key Accident Scenario Assumptions.

Important to Accident Frequency. The key accident scenario assumption important to the accident frequency is that after conservatively accounting for detection frequency and uncertainties, the observed lightning strike frequency at TWRS facilities was 0.06 strikes/yr/km^2.

Important to Accident Consequences. Sections 5.3.2.14, 5.3.2.15, and 5.3.2.17 discuss the key accident assumptions important to accident consequences.

Lightning Controls. Lightning controls are outlined below and apply to all intrusive activities in tank farms. See Tables 5.3.2.23.2-1 and 5.3.2.23.2-2.

Safety Structures, Systems, and Components. No Safety-Class or Safety-Significant SSCs are associated with lightning protection.

Technical Safety Requirement Controls. Because waste-intrusive activities may increase the likelihood of flammable gases being present above the lower flammability limit, or tank-intrusive activities may increase the likelihood of ignition of organic solvent fires or the initiation of an organic nitrate-salt reaction, a Technical Safety Requirement is imposed as illustrated in Table 5.3.2.23.2-1.

Defense-in-Depth. Additional programs and procedures provide Defense-in-Depth protection against impacts from lightning strikes as shown in Table 5.3.2.23.2-2. The Planned Safety Improvement described below will also contribute to Defense-in-Depth.

Planned Safety Improvements. The following safety improvements are planned to reduce the possibility of a lightning-initiated flammable gas deflagration, organic solvent fire, or organic salt-nitrate reaction.

- Additional grounded air terminals will be installed on 43 existing poles in 9 tank farms.
- Necessary corrective actions will be taken to ground tank risers and to bond instrumentation in risers to meet the lightning protection requirements in National Fire Protection Association (NFPA) 780, *Standard for the Installation of Lightning Protection Systems.*

These planned TWRS design improvements were recommended by the evaluation in WHC-SD-WM-ES-387.[1] As concluded in WHC-SD-WM-ES-387, these lightning protection improvements are for the single-shell tanks (SSTs) only, because a different design makes the double-shell tanks (DSTs) (including the AWF tanks) significantly less vulnerable to lightning effects.

References

NFPA 780, 1995, *Standard for the Installation of Lightning Protection Systems*, National Fire Protection Association, Quincy, Massachusetts.

WHC-SD-WM-ER-604, 1996, *Lightning Hazards Remediation Summary of Hanford Site Single Shell Tanks*, Rev. 0, Westinghouse Hanford Company, Richland, Washington.

WHC-SD-WM-ES-387, 1996, *Probability, Consequences, and Mitigation for Lightning Strikes to Hanford Site High-Level Waste Tanks*, Rev. 1, Westinghouse Hanford Company, Richland, Washington.

WHC-SD-WM-CN-041, 1996, *Tank Farm Deflagration Rates Due to Various Ignition Sources*, Rev. 0, Westinghouse Hanford Company, Richland, Washington.

5.3.2.23.3 Seismic Events. Seismic events at the tank farms pose a natural phenomenon hazard because they could initiate an accident or initiate multiple accidents from a common cause. The potential for earthquakes at the Hanford Site is predominately from regional crustal faults rather than faults related to the tectonic plate subduction zones located near the Pacific coast. No evidence of surface faulting exists in the immediate vicinity of the tank farms where the exposed surfaces primarily consist of sands, gravels, and silts deposited through a series of prehistoric cataclysmic floods.

Purpose of the Analysis: Seismic accident analyses are performed to establish the need for and effectiveness of safety SSCs and TSRs. To ensure the level of conservatism is appropriate for facility characteristics such as hazards to personnel, the public, and the environment, as well as cost, DOE-STD-1020-94 provides guidance for facility-appropriate design accelerations. Use of specific guidance depends on the facility hazard category and Performance Category of equipment. For existing Hazard Category 2 facilities with Performance Category 3 equipment such as the underground storage tanks, a peak horizontal ground acceleration of 0.19 *g* and a return frequency of 10^{-3}/yr is used as the evaluation basis acceleration (WHC-SD-W236A-TI-002, *Probabilistic Seismic Hazard Analysis DOE Hanford Site*) (Appendix C, Table C1-33). Accelerations of this magnitude, usually associated with Modified Mercalli Intensity Levels of

[1]The recommended design improvements from the evaluation in WHC-SD-WM-ES-387 also included assuring the independence of the existing lightning ground system from the tank farm electrical ground. As reported in WHC-SD-WM-ER-604, *Lightning Hazards Remediation Summary of Hanford Site Single Shell Tanks*, the separation of the existing lightning ground system from the tank farm electrical ground has been verified as adequate.

VII or greater (ORNL-NSIC-28, *Earthquakes and Nuclear Power Plant Designs*), have never been recorded at the Hanford Site. More severe accelerations are considered only in beyond evaluation basis accident assessments.

Analysis Strategy: Although the actual damage to TWRS facilities from postulated seismic events is uncertain, an acceptable estimate based on worldwide experience of typical damage to structures as a function of the acceleration was used. Additionally, potential failures with small or incidental releases masked by failures with large releases were neglected.

Typical effects and characteristics of an earthquake with a peak horizontal ground acceleration of 0.19 *g* include the following (ORNL-NSIC-28):

1. Difficult to stand
2. Ordinary masonry may crack
3. Weak chimneys may fall
4. Noticed by vehicle drivers
5. Waves appear on ponds
6. Ponded water becomes turbid with mud.

By comparing these characteristics with potential failure initiators of various structures and potential initiators of high-consequence accidents considered in the preceding sections, two types of seismically induced accidents dominate: (1) spray leaks and (2) seismically induced GREs and deflagrations of flammable gas. Due to the known leak sensitivity of jumper connections subjected to torque in valve pits, spray leaks may occur because of seismic forces acting on various pipe connections. Seismic excitation of tank sludge is assumed to cause release of associated entrained gases to tank headspaces. The gas is then assumed to ignite from seismically induced mechanical or electrical sparks. Multiple occurrences of seismically induced spray leaks and deflagrations may be possible, and depending on their locations, onsite and offsite consequences may be partially additive.

Characteristics of accelerations larger than the evaluation basis acceleration used to screen events include (ORNL-NSIC-28):

1. At 0.24 *g*, collapse of ordinary non-reinforced masonry walls and chimneys; collapse of towers and stacks

2. At 0.3 *g*, threshold acceleration for damage to ordinary foundations and potential underground pipe breaks

3. At 0.45 *g*, bending or misalignment of rails causing derailment

4. At 0.6 *g*, most ordinary masonry and frame buildings are destroyed.

On the basis of these characteristic failures and structural analyses of the underground storage tanks (WHC-SD-TWR-RPT-002, *Structural Integrity and Potential Failure Modes of the Hanford High-Level Waste Tanks*), tank failures or collapse of major structures would not be expected for the

evaluation basis earthquake. Likewise, neither major pipe ruptures nor the derailment and leakage of a loaded railcar at 204-AR are expected at a peak horizonal acceleration of 0.19 *g*.

Accidents at other TWRS facilities (such as the less than 90-day storage pad, 244-AR vault, and ventilation systems) could also occur. However, because their source terms are small compared with those of the spray leak and seismically induced deflagration, their consequences would have a small contribution to the consequences of the selected accident types. While not characteristic of a 0.19 *g* earthquake, pipe ruptures causing surface pools would also have small consequences compared to a seismically-initiated hydrogen deflagration. Minor damage to roads, bridges, and communications equipment would not be expected to impede evacuation.

Accident Scenario Assuming No Controls.

- **Sequence of Events**—A seismic event with a peak horizontal ground acceleration of 0.19 *g* and a likelihood of 10^{-3}/yr initiates one or more spray leaks during a transfer; the pumps are conservatively assumed to continue operating. Because damage to reinforced concrete and foundations is characteristic of accelerations of 0.3 *g* or larger (ORNL-NSIC-28), the valve pit cover blocks can be assumed to remain in place and undamaged in the earthquake. However, to conservatively account for all potential sources of spray leaks, this seismic analysis does not credit the cover blocks for mitigating the accident consequences.

  The probability of spray leaks and deflagrations resulting from the selected seismic events are not well understood and are conservatively assumed unity. Therefore, the seismically induced accidents are assigned the same frequency as the initiating event frequency, i.e., that of the evaluation basis earthquake, and thus fall in the unlikely frequency category.

- **Results Summary**—Conservative assessments of the onsite and offsite radiological and toxicological exposures for a spray leak in a valve pit are given in Section 5.3.2.20. Conservative assessments of the onsite and offsite radiological and toxicological exposures for hydrogen deflagrations in a DST and an SST are given in Section 5.3.2.14.

- **Implications of Results**—The consequences of the seismically induced spray leak exceed the onsite risk guidelines. Therefore, controls are required. Multiple occurrences of spray leaks similar to or less severe than the analyzed case in Section 5.3.2.20 can be postulated to occur and to exceed the associated guidelines.

  The consequences of the seismically induced SST deflagration exceed both onsite and offsite risk guidelines. The consequences of a seismically induced DST deflagration exceed the onsite risk guidelines. Therefore, controls are required. Multiple occurrences of deflagrations similar to or less severe than the analyzed cases can be postulated to occur and to exceed the associated guidelines.

Accident Scenario Assuming Controls

- **Sequence of Events**—Seismic controls have been identified and are presented in the following discussion. The mitigation strategy for spray leaks is to terminate waste transfers upon detection of the event to limit the amount of material released. The mitigation strategy for seismically induced waste tank deflagrations is to evacuate nonessential personnel. The scenario is the same except the mitigation strategies are invoked. Based on the characteristic failures of a 0.19 *g* earthquake, failures of structures that would impede evacuating personnel would not be expected.

- **Results Summary**—The ability of the selected controls to mitigate consequences of the spray leaks and flammable gas deflagrations remains uncertain and unquantifiable. Because most of the exposure to personnel for this scenario occurs immediately following the seismic event, evacuation of personnel from the immediate vicinity of the release site may have limited success. Therefore, the consequences assuming controls are conservatively assumed the same as the accident without controls.

- **Implications of Results**—Implementation of controls following a seismic event would mitigate consequences of the postulated accident scenarios. The seismic initiator is unique in that all personnel would be immediately aware of the potential for accidents because of ground shaking. Operators would respond to terminate waste transfers, provide for surveillance, initiate recovery actions, and initiate evacuation of nonessential personnel. Evacuation would limit the exposure duration of workers at risk to potential radiological and toxicological materials.

Key Accident Scenario Assumptions

- **Important to Accident Frequency**—Assumptions important to the accident frequency are as follows:

  - The seismic event assumes an evaluation basis earthquake with a peak horizontal ground acceleration of 0.19 *g* and a return frequency of 10^{-3} occurrences per year.

- **Important to Accident Consequences**—Assumptions important to the accident consequences are:

  - The integrity of the underground storage tanks and the rail system to 204-AR is not compromised by the evaluation basis acceleration of 0.19 *g* or less.

  - Valve pits and their cover blocks are not credited with mitigating the accident consequences.

  See flammable gas deflagrations and spray leak assumptions important to consequences in Sections 5.3.2.14 and 5.3.2.20.

Seismic Controls. Seismic controls are outlined below and apply to all TWRS facilities.

Safety SSCs. No Safety-Class or Safety-Significant SSCs are associated with seismic protection.

TSR Controls. As summarized in Table 5.3.2.23.3-1, administrative Emergency Preparedness controls mitigate the consequences of the seismic event by terminating waste transfers and intrusive activities as well as providing for surveillance and recovery actions.

Defense-in-Depth. No Defense-in-Depth items are specifically associated with seismic protection.

References

WHC-SD-W236A-TI-002, 1996, *Probabilistic Seismic Hazard Analysis DOE Hanford Site*, Rev. 1, Westinghouse Hanford Company, Richland, Washington.

ORNL-NSIC-28, 1970, *Earthquakes and Nuclear Power Plant Designs*, Oak Ridge National Laboratory, Oak Ridge, Tennessee.

PNL-6415, 1994, *Hanford Site National Environmental Policy Act (NEPA) Characterization*, Rev. 6, Pacific Northwest Laboratory, Richland, Washington.

WHC-SD-TWR-RPT-002, 1996, *Structural Integrity and Potential Failure Modes of the Hanford High-Level Waste Tanks*, Rev. 0, Westinghouse Hanford Company, Richland, Washington.

WHC-SD-WM-HSP-002, 1995, *Tank Farms Health and Safety Plan*, Rev. 3, Westinghouse Hanford Company, Richland, Washington.

Table 5.3.2.23.1-1. Estimates of Peak Wind Gusts and Frequencies of Occurrence at the Hanford Site.

Return period	Probability (per yr)	Peak wind gusts (km/h)*	
		15.2 m (50 ft) aboveground	61 m (200 ft) aboveground
Once in 2 years	0.5	97	109
Once in 10 years	0.1	114	129
Once in 100 years	0.01	137	151
Once in 1000 years	10^{-3}	159	175

Source: PNL-6415, 1994, Hanford Site National Environmental Policy Act (NEPA) Characterization, Rev. 6, Pacific Northwest Laboratory, Richland, Washington.
*To convert to mph, multiply by 0.621.

Table 5.3.2.23.1-2. Consequences of Flexible Receiver Bag Failure.

Receptor/hazard	Calculated dose/exposure		Risk guideline
	Without controls	With controls	Anticipated
Offsite/radiological	2.9 E-04 mSv (2.9 E-02 mrem)	*	1 mSv (100 mrem)
Onsite/radiological	1.4 E-01 mSv (14 mrem)	*	5 mSv (500 mrem)
Offsite/toxicological sum-of-fractions	2.4 E-06	*	1
Onsite/toxicological sum-of-fractions	0.78	*	1

Note: The flexible receiver bag failure is in the anticipated frequency category.
*The accident without controls is within risk guidelines and therefore a case with controls was not calculated.
mSv = millisievert

Table 5.3.2.23.1-3. Technical Safety Requirement Controls for High Winds.

Control	Safety function	Comments
Administrative control to require compliance with dome loading controls including the *Hanford Site Hoisting and Rigging Manual* (DOE-RL-92-36)*	Prevent load handling accidents that could damage Hazard Category 2 facilities or safety SSCs causing a significant uncontrolled release of radioactive or hazardous material or loss of safety function	

*DOE-RL-92-36 requires wind speed be considered before starting a lift and prohibits lifts if weather conditions are adverse to safe load-handling operations. The Manual also requires securing of the crane in accordance with manufacturer recommendations when a local weather storm warning exists.

Table 5.3.2.23.1-4. Defense-in-Depth Controls for High Wind.

Control	Safety function	Comments
Compliance with *Hanford Site Hoisting and Rigging Manual* (DOE/RL-92-36)	Compliance with manual would prevent flexible receiver bag failure in high winds	Although uncontrolled accident is within risk guidelines, compliance with manual provides Defense-in-Depth by preventing the accident

Table 5.3.2.23.2-1. Technical Safety Requirement Controls for Lightning as an Accident Initiator.

Control	Safety function	Comments
Administrative Controls: • Restriction on waste-intrusive activities for flammable gas tanks with lightning activity within 50 miles • Restriction of tank-intrusive activities for organic solvent and organic nitrate tanks with lightning activity within 50 miles • Secure elevated equipment in the lowest position with lightning activity within 50 miles	Ensures that activities resulting in gas releases are minimized, and therefore reduces the likelihood of ignition of flammable gas. Reduces the likelihood of a organic solvent fire or organic nitrate-salt reaction by removing potential lightning dissipation paths in the tanks and reduces the likelihood of a strike by lowering equipment	Flammable gas tanks are analyzed in Section 5.3.2.14. Waste-intrusive activities may cause a GRE in flammable gas tanks. Tank-intrusive activities may provide ready-paths for lightning dissipation through equipment or crane booms into the waste

*The Hanford Meteorological Station (HMS) located mid-way between the 200 East and 200 West Areas monitors lightning strikes with an instrument link to a regional electronic monitoring station. Tank farm operations are notified when lightning strikes within 80 km (50 miles) of the tank farms.

GRE = gas release events.

Table 5.3.2.23.2-2. Defense-in-Depth Controls for Lightning as an Accident Initiator.

Control	Safety function	Comments
Compliance with the contractor's health and safety plan	Provides for worker protection from lightning impacts*	
Ground tank risers, appurtenances, and intrusive equipment	Reduces the frequency of a lightning-initiated flammable gas ignition, organic solvent fire, or organic salt-nitrate reaction	Promotes the dissipation of lightning energy outside of the waste volume

*The requirements of WHC-SD-WM-HSP-002, Tank Farms Health and Safety Plan, provide Defense-in-Depth to workers, by directing workers to leave the tank farm if lightning strikes within 8 km (5 mi).

Table 5.3.2.23.3-1. Technical Safety Requirement Controls for Seismic Event.

Control	Safety function	Comments
Administrative Controls: • Emergency preparedness - Response procedures	Provides for mitigative actions to control potential releases by terminating transfers and provides provisions for surveillance and recovery actions	These controls manage the risk of uncontrolled releases of radioactive and toxic materials caused by an earthquake and limit direct risk of exposures to facility workers

This document was too large to scan as a single document; therefore, it has been divided into smaller sections.

Section 2 of 10

Document Information			
Document #	SD-WM-BIO-001	**Revision**	1
Title	TWRS BASIS FOR INTERIM OPERATION		
Date	10/28/1998		
Originator	Y.G. NOORANI	**Originator Co.**	FDH
Recipient		**Recipient Co.**	
References	ECN-644566		
Keywords	AUTHORIZATION BASIS		
Projects	BIO,TWRS,TFARM,W-320		
Other Information	THIS SECTION CONTAINS CHAPTER 5 SEC 5.4 THRU CHAPTER 7 OF VOLUME 2		

5.4 ENGINEERED AND ADMINISTRATIVE CONTROLS

This section describes the criteria used for control decisions and identifies the controls for the individual hazardous conditions identified for TWRS facilities and operations. Control decision criteria are discussed in Section 5.4.1. The following controls identified for individual hazardous conditions are presented in this section.

- Safety structures, systems, and components (SSCs) and Technical Safety Requirements (TSRs) for hazardous conditions with significant consequences to the public and onsite workers (Section 5.4.2, "Public and Onsite Worker Protection")
- Safety SSCs and TSRs for anticipated hazardous conditions with significant consequences to the facility worker (Section 5.4.3, "Facility Worker Protection")
- Controls for hazardous conditions with the potential for significant environment consequences (Section 5.4.4, "Environmental Protection").

Controls that provide Defense-in-Depth are identified in Section 5.3 for the analyzed representative accidents. Defense-in-Depth controls for individual hazardous conditions are not contained in this Basis for Interim Operation document, but will be included in the Tank Waste Remediation System Final Safety Analysis Report.

5.4.1 Control Decision Criteria

Decisions on classifying SSCs as Safety-Class and Safety-Significant, selecting required TSR controls, identifying Defense-in-Depth controls, and identifying additional controls specifically for environmental protection were developed with a disciplined methodology and process using established control decision criteria. The control decision methodology and process are summarized in Section 5.2 with detailed descriptions provided in WHC-SD-WM-TI-773, *Hazards Analysis Results Report*, and Dunford 1996. Applying this control decision methodology and process, controls were derived on the basis of control decision criteria, the best available information, and the collective expertise and experience of the participating hazard and accident analysts, engineering, operations, and management personnel.

The control decision criteria are based on the following documents.

DOE 5480.23, *Nuclear Safety Analysis Reports*.

DOE 5480.22, *Technical Safety Requirements*

DOE-STD-3009-94, *Preparation Guide for U.S. Department of Energy Nonreactor Nuclear Facility Safety Analysis Reports*.

WHC-CM-4-46, *Nonreactor Facility Safety Analysis Manual*, Section 6, "Technical Safety Requirements," Rev. 1, and Section 9, "Safety Classification of Structures, Systems, and Components," Rev. 2.

Appendix B of Section 6 and Table 1 of Section 9 of WHC-CM-4-46 contain the fundamental control decision criteria followed in selecting TSRs and classifying safety SSCs, respectively. Two modifications were made to these criteria. Instead of using the referenced risk guidelines in WHC-CM-4-46 (Section 7, "Risk," Rev. 4), more conservative risk guidelines prescribed by the U.S. Department of Energy were used (Tables 5.3-2 and 5.3-3). Additionally, the U.S. Department of Energy, Richland Operations Office has directed the development and implementation of TSR controls for the toxicological hazards (Wagoner 1996, *Approval of Tank Waste Remediation System (TWRS) Basis for Interim Operation [BIO]*). For accidents where the toxicological consequences are of primary concern, TSR controls are developed consistent with criteria used to develop radiological controls. Controls designated to prevent or mitigate radiological consequences that exceed both the radiological and toxicological risk guidelines are evaluated to ensure that the controls also protect against toxicological hazards. If the radiological controls are determined to be adequate, separate TSR controls for toxicological hazards are not developed; however, the TSR bases are expanded to include toxicological hazards. A principal criterion used in determining the necessary and sufficient controls required to protect the public and onsite workers was the comparison of postulated accident frequency and consequences to the risk guidelines.

Additional criteria that guided control decisions were the following.

- Controls are primarily limited to existing SSCs. Exceptions were made if the control could be rapidly implemented and no reasonable alternative existed.[1]
- Control preferences are as follows:
  1. Controls that prevent the accident versus those that mitigate its consequences
  2. Passive engineered versus active engineered controls
  3. Engineered controls versus administrative controls.
- Controls providing significant Defense-in-Depth are classified as safety SSCs or are elevated to a TSR control.
- TSRs are <u>not</u> developed for postulated accidents resulting in only environmental consequences.[2]

[1]Although control decisions were primarily limited to existing SSCs, the control decision process did identify new SSCs or significant modifications to existing SSCs as possible alternative or additional controls. New safety SSCs that may further reduce the risk of a postulated accident, especially accidents that exceed the risk evaluation guidelines with existing controls, are candidates for cost-benefit analysis and future implementation.

[2]For accidents with significant environmental consequences where controls are required beyond those identified for the protection of the safety of the public, onsite workers, and facility workers, additional controls specifically for environmental protection are identified (see Section 5.4.4). These specific environmental controls are implemented through TWRS programs and procedures and are enforced through existing environmental regulations, permits, and agreements.

- SSCs are not classified Safety-Class or Safety-Significant solely for preventing or mitigating postulated accidents resulting in environmental consequences.

Other criteria that were important considerations in control decisions are listed below.

- Control reliability, availability, and maintainability
- Control effects on facility workers (i.e., increased radiation doses or toxicological exposures - ALARA [As Low As Reasonably Achievable] issues)
- Control optimization and integration
- Control cost/benefit
- Control human factors impacts
- Control impacts on TWRS mission.

The assessment of alternative controls with respect to the above criteria was based on the knowledge and experience of cognizant operations, engineering, safety analysis, and management personnel. For example, when evaluating alternative controls to prevent or mitigate a postulated accident, the reliability, availability, and maintainability of potential safety SSCs were assessed qualitatively based on discussions with TWRS operating and engineering personnel.

Systems with known high failure rates, low availability, or maintainability problems were either not selected or multiple controls were selected. The estimated reliability of a safety SSC, along with the postulated accident frequency and consequences, provided a qualitative estimate of risk that was considered in assessing the sufficiency of a safety SSC control. Where judged necessary, additional controls were identified. Human reliability was similarly considered, with an assumed error rate of 1×10^{-2} per year. Where historical experience showed that a potential control was not sufficiently singularly reliable, it was either not selected or multiple controls were selected. In a limited number of cases, a human factors task analysis was performed and quantified (e.g., assessment of operator response time to shut down a waste transfer pump following receipt of an alarm).

Because control decisions depend on the postulated accident consequence analyses, the conservatism of the accident analyses also influenced control decisions. As required by DOE 5480.22 and Section 6 of WHC-CM-4-46,[3] key initial conditions in the accident analysis that are under the control of an operator are identified and protected by TSR controls.

[3] Refer to Appendix F, "Sitewide Controlled Manual Cross-Reference Table," of the BIO for cross-walk between sitewide controlled manuals (e.g., WHC-CM-X-XX) superseded by Fluor Daniel Hanford, Inc., procedures (e.g., HNF-PRO-X-XXX).

The control decisions were generally qualitative, except for the comparison of calculated accident analysis results with the risk guidelines. Control decisions were documented in accordance with the procedure for selecting controls (Dunford 1996, *Tank Waste Remediation System Final Safety Analysis Report Selection of Systems, Structures, and Components and Technical Safety Requirements*) and are presented in this Basis for Interim Operation report as interim controls. The application of safety SSC and TSR controls to all hazardous conditions identified for TWRS facilities and operations is presented in the following sections. The TWRS Final Safety Analysis Report may revise or refine these interim controls and will further discuss the derivation of controls in Chapter 5.0, "Derivation of TSRs."

5.4.2 Public and Onsite Worker Protection

The safety SSC and TSR (Footnote 2 on previous page) controls for hazardous conditions with the potential for significant public (S3) and onsite worker (S2) radiological or chemical exposures are presented in Table 5.4-1. The table is organized by the representative accidents analyzed in Section 5.3. Following each representative accident are the hazardous conditions (S3 and S2) represented by the accident.

5.4.3 Facility Worker Protection

Safety SSCs and TSRs (Footnote 2 on previous page) applicable to anticipated hazardous conditions with the potential for significant radiological or chemical exposure to the facility worker (F3, S1) are presented in Table 5.4-2. The safety SSC and TSR controls identified in Table 5.4-1 that protect the public and onsite workers also protect the facility worker.

5.4.4 Environmental Protection

Hazardous conditions with significant environmental consequences (E3 or E2) are identified in the hazard analysis. For many of these hazardous conditions, the controls identified to protect the public, onsite worker, and facility worker also provide protection for the environment. A listing of all the hazardous conditions with significant environmental consequences (E3 and E2) and the applicable safety SSCs and TSRs that also provide environmental protection is provided in Table 5.4-3.

When controls selected to protect the public, onsite workers, and facility workers do not adequately protect the environment, additional required controls are identified, including the following:

- High-efficiency particulate air filters
- pH control to reduce corrosion
- Cathodic protection on transfer lines
- Temperature limits on tanks and waste transfers

- Deactivation of cribs, ponds, and ditches
- Sealing off of waste streams
- Salt well pumping
- Leak detection
- Provisions to prevent equipment from penetrating the bottom of the tank.

A complete list of environmental controls will be provided in the TWRS Final Safety Analysis Report.

5.4.5 References

DOE 5480.22, 1992, *Technical Safety Requirements*, Change 2, U.S. Department of Energy, Washington D.C.

DOE 5480.23, 1994, *Nuclear Safety Analysis Reports*, Change 1, U.S. Department of Energy, Washington D.C.

DOE-STD-3009-94, 1994, *Preparation Guide for U.S. Department of Energy Nonreactor Nuclear Facility Safety Analysis Reports*, U.S. Department of Energy, Washington D.C.

Dunford, G. L., 1996, *Tank Waste Remediation System Final Safety Analysis Report Selection of Safety Structures, Systems, and Components and Technical Safety Requirements*, (external letter 9654131 to M. L. Cowen, Westinghouse Savannah River Company, September 13), Westinghouse Hanford Company, Richland, Washington

Wagoner, J.D., 1996, *Approval of Tank Waste Remediation System (TWRS) Basis for Interim Operation (BIO)*, (letter 96-MSD-390 to H. J. Hatch, Fluor Daniel Hanford, Inc., December 12), U.S. Department of Energy, Richland Operations Office, Richland, Washington.

WHC-CM-4-46, 1989, *Nonreactor Facility Safety Analysis Manual*, Section 6, "Technical Safety Requirements," Rev. 1; Section 7, "Risk," Rev. 4; and Section 9, "Safety Classification of Structures, Systems, and Components," Rev. 2, Westinghouse Hanford Company, Richland, Washington.

WHC-SD-WM-TI-773, 1996, *Hazard Analysis Results Report*, Rev. 0, Westinghouse Hanford Company, Richland, Washington.

This page intentionally left blank.

Table 5.4-1. Safety Structures, Systems, and Components and Technical Safety Requirements for Potential S3 and S2 Consequences. (107 Sheets)

ID	Hazardous Condition	Cause	Preventive SSCs	Preventive TSRs	Mitigative SSCs	Mitigative TSRs	Memo	Cons
ABBREVIATION LIST: Admin = Administrative Cons = Consequence Cntrls = Controls Detect = Detection Ign = Ignition Mon = Monitoring Prep = Preparedness Sys = Systems Trans = Transfer TSR = Technical Safety Requirement								
NUCLEAR CRITICALITY (Section 5.3.2.1)								
I-PFP-1-AGT-A	Release of fission product gases and aerosols from receiver tank due to potential for solids to collect in D-5, If mixed later, potential for composition of next batch to exceed Criticality Prevention Specifications (CPS); potential "Criticality Issue"	Human error or agitator fails results in criticality	None required	AC: Nuclear Criticality Safety	None required	None required	Controls based on accident analysis (Nuclear Criticality).	S2
102AW-08-COMP02	Release of fission product gases and aerosols from Tank 241-AW-102 due to criticality	Misrouting of waste creates critical mass	None required	AC: Nuclear Criticality Safety AC: Trans Cntrls (Mis-routing)	None required	None required	Controls based on accident analysis (Nuclear Criticality; and Surface Leak Resulting in Pool).	S2
102AW-08-COMP02A	Release of fission product gases and aerosols from Tank 241-AW-102 due to criticality	Human error - addition of excess fissile material to Tank 241-AW-102 creates critical mass	None required	AC: Nuclear Criticality Safety	None required	None required	Controls based on accident analysis (Nuclear Criticality).	S2
102AW-08-COMP03	Release of fission product gases and aerosols from Tank 241-AW-102 due to criticality	Non-uniform distribution of fissile material (horizontally) creates critical mass	None required	AC: Nuclear Criticality Safety	None required	None required	Controls based on accident analysis (Nuclear Criticality).	S2
102AW-08-COMP04	Release of fission product gases and aerosols from Tank 241-AW-102 due to criticality	Non-uniform distribution of fissile material (vertically) due to addition of "rich" layer	None required	AC: Nuclear Criticality Safety	None required	None required	Controls based on accident analysis (Nuclear Criticality).	S2
102AW-08-COMP05	Release of fission product gases and aerosols from Tank 241-AW-102 due to criticality	Over concentration of waste creates critical mass	None required	AC: Nuclear Criticality Safety	None required	None required	Controls based on accident analysis (Nuclear Criticality).	S2

Table 5.4-1. Safety Structures, Systems, and Components and Technical Safety Requirements for Potential S3 and S2 Consequences. (107 Sheets)

ID	Hazardous Condition	Cause	Preventive SSCs	Preventive TSRs	Mitigative SSCs	Mitigative TSRs	Memo	Cons
102S-04.e4	Release of radioactive gases and aerosols from Tank 241-S-102 vapor space to atmosphere due to criticality	Criticality (misrouting)	None required	AC: Nuclear Criticality Safety AC: Trans Cntrls (Mis-routing)	None required	None required	Controls based on accident analysis (Nuclear Criticality; and Surface Leak Resulting in Pool).	S2
106C-01N	Release of radioactive and/or hazardous material from Tank 241-C-106 to atmosphere due to criticality	Criticality in waste tank from high temperature	None required	AC: Nuclear Criticality Safety	None required	None required	Controls based on accident analysis (Nuclear Criticality).	S2
114SX-05.c.2c	Release pf radioactive gases and aerosols as well as direct radiation from Tank 241-SX-114 due to criticality	Criticality (difficult to achieve concentration needed and difficult to obtain configuration required)	None required	AC: Nuclear Criticality Safety	None required	None required	Controls based on accident analysis (Nuclear Criticality).	S2
244AR-03.a.09	Release of radioactive aerosols created by criticality to the cell atmosphere	Criticality in waste	None required	AC: Nuclear Criticality Safety	None required	None required	Controls based on accident analysis (Nuclear Criticality).	S2
I-PFP-1-CMP-B	Release of fission product gases and aerosols from receiver tank due to, potential for localized concentration of fissile materials in receiver tank from failure to add ferric nitrates; potential "Criticality Issue"	Failure to add ferric nitrates, results in criticality	None required	AC: Nuclear Criticality Safety	None required	None required	Controls based on accident analysis (Nuclear Criticality).	S2
I-PFP-1-CMP-D	Release of fission product gases and aerosols from receiver tank due to excess fissile material in waste, potential to exceed criticality prevention specification requirements for shipment; potential "Criticality Issue"	Excess fissile content added to waste results in criticality	None required	AC: Nuclear Criticality Safety	None required	None required	Controls based on accident analysis (Nuclear Criticality).	S2

Table 5.4-1. Safety Structures, Systems, and Components and Technical Safety Requirements for Potential S3 and S2 Consequences. (107 Sheets)

ID	Hazardous Condition	Cause	Preventive SSCs	Preventive TSRs	Mitigative SSCs	Mitigative TSRs	Memo	Cons
I-PUREX-3-CMP-E	Release of fission product gases and aerosols from receiver tank due to criticality caused by exceeding Criticality Prevention Specifications for shipment from PUREX	Transfer of L Cell sump water to Tank F-18 and eventually to the Tank Farms	None required	AC: Nuclear Criticality Safety	None required	None required	Controls based on accident analysis (Nuclear Criticality).	S2
ITK-06	Release of radioactive and/or hazardous material from point of in-tank access (non-fire, non-explosion) due to criticality	Intrusive activity causes critical mass	None required	AC: Nuclear Criticality Safety	None required	None required	Controls based on accident analysis (Nuclear Criticality).	S2
ITK-06-I	Release of radioactive and/or hazardous material from point of in-facility access due to criticality within the in-facility waste during intrusive activity (non-fire, non-explosion)	Criticality from intrusive activity	None required	AC: Nuclear Criticality Safety	None required	None required	Controls based on accident analysis (Nuclear Criticality).	S2
XS-03-LEVE02 XS-21-LEVE (244-S DCRT)	Release of fission product gases and aerosols from 244 TX DCRT due to criticality	Evaporation of DCRT contents with increased solids settling on DCRT bottom creates critical mass	None required	AC: Nuclear Criticality Safety	None required	None required	Controls based on accident analysis (Nuclear Criticality).	S2
XS-03-TEMP02 XS-21-TEMP (244-S-DCRT)	Release of fission product gases and aerosols from 244 TX DCRT due to criticality	Transfer of material into tank that violates criticality specification	None required	AC: Nuclear Criticality Safety	None required	None required	Controls based on accident analysis (Nuclear Criticality).	S2
XS-06-FLOW01	Release of fission product gases and aerosols from 244 TX DCRT due to criticality	Transfer of inadequately recirculated waste from tank due to failure to appropriately balance flow between recirculation and transfer line causing buildup of solids creating critical mass	None required	AC: Nuclear Criticality Safety	None required	None required	Controls based on accident analysis (Nuclear Criticality).	S2

Table 5.4-1. Safety Structures, Systems, and Components and Technical Safety Requirements for Potential S3 and S2 Consequences. (107 Sheets)

ID	Hazardous Condition	Cause	Preventive SSCs	Preventive TSRs	Mitigative SSCs	Mitigative TSRs	Memo	Cons
XS-13-PRES04	Release of fission product gases and aerosols from catch tank 241-U-301B due to criticality	Transfer of excess fissile material to catch tank creates critical mass	None required	AC: Nuclear Criticality Safety	None required	None required	Controls based on accident analysis (Nuclear Criticality).	S2
XS-20-FLOW05	Release of fission product gases and aerosols from 244-S DCRT (not designated solids receiver) due to criticality	Transfer of waste from 244 TX DCRT due to improper valve lineup creates critical mass	None required	AC: Nuclear Criticality Safety	None required	None required	Controls based on accident analysis (Nuclear Criticality).	S2
XS-26-PRES XS-26-TEMP 102-AW-TEMP (FOR TK-102-AW)	Release of fission product gases and aerosols from Tank 241-SY-102 due to criticality	Transfer of critical mass of fissile material and achievement of critical geometry	None required	AC: Nuclear Criticality Safety	None required	None required	Controls based on accident analysis (Nuclear Criticality).	S2
HEPA FILTER FAILURE - EXPOSURE TO HIGH TEMPERATURE OR PRESSURE (Section 5.3.2.2)								
106C-10J	Release of radioactive and/or hazardous material from Tank 241-C-106 due to tank structural damage, HEPA damage caused by high temperature	Fire in or around ventilation system	None required	None required	SS: Ventilation Syss CAM Interlock	LCO: Ventilation Stack CAM Interlock Syss AC: HEPA Filter Cntrls (Source Term)	Controls based on accident analysis (HEPA Filter Failure - Exposure to High Temperature or Pressure).	S2
102S-04.c	Release of radioactive aerosols contained in Tank 241-S-102 vapor space to atmosphere due to ignition of flammable gas in tank causing HEPA failure	Concentration of H2 or Ammonia (or other flammable gasses) above LFL + Ignition source	SC: SST Ventilation	LCO: SST Ventilation Syss AC: Ign Cntrls AC: Flammable Gas Mon Cntrls	None required	AC: HEPA Filter Cntrls (Source Term)	Controls based on BIO Appendix E; and accident analysis (HEPA Filter Failure - Exposure to High Temperature or Pressure).	S3
102S-04.e1b	Release of radioactive aerosols contained in Tank 241-S-102 vapor space to atmosphere due to due to ignition of flammable gas in tank causing HEPA failure	Concentration of H2 or Ammonia (or other flammable gasses) above LFL + Ignition source	SC: SST Ventilation	LCO: SST Ventilation Syss AC: Ign Cntrls AC: Flammable Gas Mon Cntrls	None required	AC: HEPA Filter Cntrls (Source Term)	Controls based on BIO Appendix E; and accident analysis (HEPA Filter Failure - Exposure to High Temperature or Pressure).	S2
106C-01F	Release of radioactive and/or hazardous material from Tank 241-C-106, blown out HEPA filters and/or discharge out cover blocks due to high tank pressure	Blockage of inlet, outlet and cascade lines	None required	None required	None required	AC: HEPA Filter Cntrls (Source Term)	Controls based on accident analysis (HEPA Filter Failure - Exposure to High Temperature or Pressure) and low accident frequency.	S2

Table 5.4-1. Safety Structures, Systems, and Components and Technical Safety Requirements for Potential S3 and S2 Consequences. (107 Sheets)

ID	Hazardous Condition	Cause	Preventive SSCs	Preventive TSRs	Mitigative SSCs	Mitigative TSRs	Memo	Cons
106C-11J	Release of radioactive and/or hazardous material from Tank 241-C-106 due to HEPA damage, beyond 200 F design	Exhauster heater overheat	None required	None required	SS: Ventilation CAM Interlock Syss	LCO: Ventilation Stack CAM Interlock Syss AC: HEPA Filter Cntrls (Source Term)	Controls based on accident analysis (HEPA Filter Failure - Exposure to High Temperature or Pressure).	S2
106C-11K	Release of radioactive and/or hazardous material from Tank 241-C-106 due to HEPA filter damage, spread of contamination caused by high temperature in ventilation system	Fire in exhauster ductwork	None required	None required	SS: Ventilation CAM Interlock Syss	LCO: Ventilation Stack CAM Interlock Syss AC: HEPA Filter Cntrls (Source Term)	Controls based on accident analysis (HEPA Filter Failure - Exposure to High Temperature or Pressure).	S2
106C-11M	Release of radioactive and/or hazardous material from Tank 241-C-106 due to damaged HEPA filters	Event that damages HEPAs	None required	None required	SS: Ventilation CAM Interlock Syss	LCO: Ventilation Stack CAM Interlock Syss AC: HEPA Filter Cntrls (Source Term)	Controls based on accident analysis (HEPA Filter Failure - Exposure to High Temperature or Pressure).	S2
106C-11O	Release of radioactive and/or hazardous material from Tank 241-C-106 due to loss of filtration	HEPA filter blowout	None required	None required	SS: Ventilation CAM Interlock Syss	LCO: Ventilation Stack CAM Interlock Syss AC: HEPA Filter Cntrls (Source Term)	Controls based on accident analysis (HEPA Filter Failure - Exposure to High Temperature or Pressure).	S2
114SX-04.c.2.c	Release of radioactive aerosols from Tank 241-SX-114 head space to atmosphere due to exhauster HEPA filter deterioration	Deteriorated HEPA filter	None required	None required	SS: Ventilation CAM Interlock Syss	LCO: Ventilation Stack CAM Interlock Syss	Controls based on accident analysis (Unfiltered Release).	S2
204AR-11F	Release of airborne radiological contamination through the ventilation stack from the unloader room atmosphere due to fire in ventilation ducting	Fire in ventilation ducting resulting in damage to the HEPA filters and release to the atmosphere	None required	None required	SS: Ventilation CAM Interlock Syss	AC: HEPA Filter Cntrls (Source Term) LCO: Ventilation Stack CAM Interlock Syss	Controls based on accident analysis (HEPA Filter Failure - Exposure to High Temperature or Pressure) for 204-AR.	S2

Table 5.4-1. Safety Structures, Systems, and Components and Technical Safety Requirements for Potential S3 and S2 Consequences. (107 Sheets)

ID	Hazardous Condition	Cause	Preventive SSCs	Preventive TSRs	Mitigative SSCs	Mitigative TSRs	Memo	Cons
244AR-01.b.04	Release of radioactive aerosols from the facility exhaust stack due to filter failure	HEPA filter fails	None required	None required	None required	AC: HEPA Filter Cntrls (Source Term)	Controls based on accident analysis (Unfiltered Release) and no active ventilation at 244-AR.	S2
CRN-19	Release of radioactive or toxic material from above ground tank equipment due to dropping crane load	Mechanical failure: corrosion, faulty materials (filter crush)	None required	AC: Dome Loading Cntrls (Lifting Cntrls)	None required	AC: HEPA Filter Cntrls (Source Term)	Controls based on accident analyses (Unfiltered Release; and Tank Failure Due to Excessive Loads).	S2
CRN-20	Radioactive or toxic material release from pit or riser due to dropping crane load onto above ground tank equipment	High wind or seismic event (filter crush)	None required	AC: Dome Loading Cntrls (Lifting Cntrls)	None required	AC: HEPA Filter Cntrls (Source Term) AC: Emergency Prep (Seismic)	Controls based on accident analyses (Unfiltered Release; Natural Phenomena - Seismic; and Natural Phenomena - High Winds).	S2
NP-02	Radioactive and hazardous material releases from tanks and ventilation systems due to fire	Lightning strikes ventilation system	None required	None required	SS: Ventilation CAM Interlock Syss	LCO: Ventilation Stack CAM Interlock Syss AC: HEPA Filter Cntrls (Source Term)	Controls based on accident analysis (HEPA Filter Failure - Exposure to High Temperature or Pressure).	S2
XS-05-FLOW01	Release of aerosols and filter media from DCRT ventilation system due to HEPA filter damage	Replacement of exhaust fan with larger capacity fan causes HEPA filter damage	None required	None required	SS: Ventilation CAM Interlock Syss	AC: HEPA Filter Cntrls (Source Term) LCO: Ventilation Stack CAM Interlock System	Controls based on accident analysis (HEPA Filter Failure - Exposure to High Temperature or Pressure).	S2
XS-05-TEMP01	Release to atmosphere of materials from DCRT ventilation filters and tank due to fire	Fire in ventilation system due to failure of ventilation heater controls	None required	None required	None required	AC: HEPA Filter Cntrls (Source Term)	Control for DCRTs based on accident analysis (HEPA Filter Failure - Exposure to High Temperature or Pressure).	S2
XS-05-TEMP02	Release to atmosphere of materials from DCRT ventilation filters and tank due to filter degradation	Fire in ventilation system due to flammable gas buildup and ignition	SC: DCRT Level Dip Tube Flow	LCO: DCRT Ventilation Sys AC: Ign Cntrls AC: Flammable Gas Mon Cntrls	None required	AC: HEPA Filter Cntrls (Source Term)	Controls based on BIO Appendix E and accident analysis (HEPA Filter Failure - Exposure to High Temperature or Pressure).	S2

Table 5.4-1. Safety Structures, Systems, and Components and Technical Safety Requirements for Potential S3 and S2 Consequences. (107 Sheets)

ID	Hazardous Condition	Cause	Preventive SSCs	Preventive TSRs	Mitigative SSCs	Mitigative TSRs	Memo	Cons
UNFILTERED RELEASE (Section 5.3.2.2)								
114SX-04.c.2.a	Release of radioactive aerosols from Tank 241-SX-114 head space to atmosphere due to exhauster HEPA filter seal failure	HEPA filter seal failure	None required	None required	SS: Ventilation CAM Interlock Syss	LCO: Ventilation Stack CAM Interlock Syss	Controls based on accident analysis (Unfiltered Release).	S2
106C-11E	Release of unfiltered tank atmosphere from Tank 241-C-106 due to damaged ductwork	Damage to ventilation ductwork upstream of filters	None required	None required	None required	None required	No controls required based on accident analysis (Unfiltered Release).	S2
106C-11L	Release of radioactive and/or hazardous material from Tank 241-C-106, through HEPA filter path, due to human error in installation of filter	Improper installation of HEPAs	None required	None required	SS: Ventilation CAM Interlock Syss	LCO: Ventilation Stack CAM Interlock Syss	Controls based on accident analysis (Unfiltered Release).	S2
114SX-04.b.1.b.1b	Release of radioactive aerosols from Tank 241-SX-114 head space to atmosphere due to failure of exhaust ducting from seismic event (mechanical disruption)	Ducting failure from seismic activity	None required	None required	None required	AC: Emergency Prep (Seismic)	Controls based on accident analysis (Unfiltered Release and Natural Phenomena - Seismic).	S2
114SX-04.c.1	Release or radioactive aerosols from Tank 241-SX-114 head space to atmosphere due to mechanical failure of exhauster HEPA filter	Plenum structure failure pierces filter	None required	None required	SS: Ventilation CAM Interlock Syss	LCO: Ventilation Stack CAM Interlock Syss AC: HEPA Filter Cntrls (Source Term)	Controls based on accident analysis (Unfiltered Release).	S2
114SX-04.c.2.b	Release of radioactive aerosols from Tank 241-SX-114 head space to atmosphere due to exhauster defective HEPA filter	Defective HEPA filter	None required	None required	SS: Ventilation CAM Interlock Syss	LCO: Ventilation Stack CAM Interlock Syss	Controls based on accident analysis (Unfiltered Release).	S2
114SX-04.c.2.d	Release of radioactive aerosols from Tank 241-SX-114 head space to atmosphere due to exhauster HEPA filter installation errors	Improper installation (human error)	None required	None required	SS: Ventilation CAM Interlock Syss	LCO: Ventilation Stack CAM Interlock Syss	Controls based on accident analysis (Unfiltered Release).	S2

Table 5.4-1. Safety Structures, Systems, and Components and Technical Safety Requirements for Potential S3 and S2 Consequences. (107 Sheets)

ID	Hazardous Condition	Cause	Preventive SSCs	Preventive TSRs	Mitigative SSCs	Mitigative TSRs	Memo	Cons
CRN-09-1	Release of radioactive and/or toxic materials from ventilation system due to damage caused by crane operation	Human error in positioning crane load	None required	AC: Dome Loading Cntrls (Lifting Cntrls)	None required	None required	Controls based on accident analyses (Unfiltered Release; and Tank Failure Due to Excessive Loads).	S2
CRN-10-1	Release of radioactive and/or toxic materials from ventilation system due to damage caused by crane operation	Mechanical failure in positioning crane load	None required	AC: Dome Loading Cntrls (Lifting Cntrls)	None required	None required	Controls based on accident analyses (Unfiltered Release; and Tank Failure Due to Excessive Loads).	S2
FIRE IN CONTAMINATED AREA (Section 5.3.2.3)								
CRN-05	Release of radioactive and/or toxic materials from pits and risers due to fuel tank fire in crane or support vehicle (see In-Tank Equipment Installation for tank fires)	Human error in positioning crane load	None required	AC: Ign Cntrls (Vehicles)	None required	AC: Emergency Prep (Fire in Contaminated Area)	Controls based on accident analysis (Fire in Contaminated Area).	S2
102AW-04-STRU03	Release of radioactive particulate from Tank 241-AW-102 central pump pit due to re-suspension	Equipment drop during crane work	None required	AC: Dome Loading Cntrls (Lifting Cntrls)	None required	None required	Controls based on accident analysis (Tank Failure Due to Excessive Loads, Vacuum, or Degradation) to reduce frequency of load drops.	S2
102AW-04-TEMP	Release of radioactive particulate from Tank 241-AW-102 central pump pit due to fire	Pump motor electrical fire	None required	None required	None required	AC: Emergency Prep (Fire in Contaminated Area)	Controls based on accident analysis (Fire in Contaminated Area).	S2
102S-02.b1	Release of radioactive aerosols to atmosphere from Tank 241-S-102 pump pit due to flammable gas generated in pump pit igniting and burning paint off pump pit walls	Jumper leak + H2 evolution (or ammonia) + Spark	SC: Trans Leak Detect Syss SS: Tank Level Detect Sys	LCO: Trans Leak Detect Syss AC: Ign Cntrls AC: Flammable Gas Mon Cntrls AC: Trans Cntrls (Leak Prevention/ Detect)	None required	AC: Emergency Prep (Fire in Contaminated Area)	Controls based on BIO Appendix E and accident analyses (Surface Leak Resulting in Pool; and Fire in Contaminated Area).	S2

Table 5.4-1. Safety Structures, Systems, and Components and Technical Safety Requirements for Potential S3 and S2 Consequences. (107 Sheets)

ID	Hazardous Condition	Cause	Preventive SSCs	Preventive TSRs	Mitigative SSCs	Mitigative TSRs	Memo	Cons
102S-02.b2	Release of radioactive aerosols to atmosphere from Tank 241-S-102 due to flammable gas from tank igniting in pump pit and burning paint off pump pit	H2/Ammonia production migrates into pump pit + Spark (pumps not operating)	SC: SST Ventilation	LCO: SST Ventilation Syss AC: Ign Cntrls AC: Flammable Gas Mon Cntrls AC: Trans Cntrls (Leak Prevention/ Detect)	None required	AC: Emergency Prep (Fire in Contaminated Area)	Controls based on BIO Appendix E and accident analysis (Fire in Contaminated Area).	S2
102S-02.d2	Release of radioactive aerosols to atmosphere from Tank 241-S-102 due to burning fuel flowing into pit ignited from ruptured gas tank.	Vehicle drives into pit cover puncturing gas tank + Ignition	None required	AC: Ign Cntrls (Vehicles)	None required	AC: Emergency Prep (Fire in Contaminated Area)	Controls based on accident analysis (Fire in Contaminated Area).	S2
106C-06D	Release of contamination from Tank 241-C-106 pump pit and potential worker injury due to fire	Fire in or near pump pit due to vehicle fuel spill and burn	None required	AC: Ign Cntrls (Vehicles)	None required	AC: Emergency Prep (Fire in Contaminated Area)	Controls based on accident analysis (Fire in Contaminated Area).	S2
106C-06L	Release of contamination from Tank 241-C-106 pump pit due to fire/explosion affecting the structural integrity	Fire/explosion in pump pit	SC: SST Ventilation	LCO: SST Ventilation Syss AC: Ign Cntrls AC: Flammable Gas Mon Cntrls AC: Trans Cntrls (Salt Well Pumping)	None required	AC: Emergency Prep (Fire in Contaminated Area)	Controls based on BIO Appendix E and accident analysis (Fire in Contaminated Area).	S2
CRN-06	Release of radioactive and/or toxic materials from pits and risers due to fuel tank fire in crane or support vehicle (see In-Tank Equipment Installation for tank fires)	Mechanical failure in positioning crane load	None required	AC: Ign Cntrls (Vehicles) AC: Dome Loading Cntrls (Lifting Cntrls)	None required	AC: Emergency Prep (Fire in Contaminated Area)	Controls based on accident analyses (Fire in Contaminated Area; and Tank Failure Due to Excessive Loads, Vacuum, or Degradation).	S2
CRN-07	Release of radioactive and/or toxic materials from pits and risers due to fuel tank fire in crane or support vehicle (see In-Tank Equipment Installation for tank fires)	Crane hits electrical lines/ supplies	None required	AC: Ign Cntrls (Vehicles) AC: Dome Loading Cntrls (Lifting Cntrls)	None required	AC: Emergency Prep (Fire in Contaminated Area)	Controls based on accident analyses (Fire in Contaminated Area; and Tank Failure Due to Excessive Loads, Vacuum, or Degradation).	S2

Table 5.4-1. Safety Structures, Systems, and Components and Technical Safety Requirements for Potential S3 and S2 Consequences. (107 Sheets)

ID	Hazardous Condition	Cause	Preventive SSCs	Preventive TSRs	Mitigative SSCs	Mitigative TSRs	Memo	Cons
CRN-08	Release of radioactive and/or toxic materials from pits and risers due to fuel tank fire in crane or support vehicle (see In-Tank Equipment Installation for tank fires)	Lightning	None required	AC: Ign Cntrls (Lightning)	None required	AC: Emergency Prep (Fire in Contaminated Area)	Controls based on accident analysis (Natural Phenomena - Lightning and Fire in Contaminated Area).	S2
CVR-05	Release of radioactive or hazardous material through combustion or fire/explosion of materials in pit due to human error	Failure to sniff or improper sniffing	None required	AC: Ign Cntrls AC: Flammable Gas Mon Cntrls	None required	AC: Emergency Prep (Fire in Contaminated Area)	Controls based on BIO Appendix E and accident analysis (Fire in Contaminated Area).	S2
CVR-15-I	Release of radioactive or hazardous material from pit upon dropping or falling coverblocks or pieces of coverblocks	Coverblock hooks fail or pieces of degraded coverblock fall into pit	None required	AC: Dome Loading Cntrls (Lifting Cntrls)	None required	None required	Controls based on accident analysis (Tank Failure Due to Excessive Loads, Vacuum, or Degradation) to reduce frequency of load drops.	S2
VEH-01	Release of radioactive or toxic materials from cask due to fire caused by vehicle operation	Vehicle catches on fire	None required	None required	None required	None required	None (All control activity deferred to packaging safety analyses).	S2
VEH-01-I	Release of radioactive or toxic materials from vehicle carrying MISF samples or contaminated equipment due to vehicle fire	Vehicle catches on fire	None required	None required	None required	None required	None (All control activity deferred to packaging safety analyses).	S2
XS-12-FLOW02	Release of aerosols from Diversion Box 241-U-152 due to flammable gas deflagration	Chemical reaction of catch tank material with backflow of vapors via diversion box drain line	None required	AC: Ign Cntrls AC: Flammable Gas Mon Cntrls	None required	None required	Control based on BIO Appendix E.	S2
XS-12-FLOW03	Release of aerosols from Diversion Box 241-U-152 due to hydrogen deflagration	Radiolysis of catch tank material with backflow of vapors via diversion box drain line and ignition source	None required	AC: Ign Cntrls AC: Flammable Gas Mon Cntrls	None required	None required	Control based on BIO Appendix E.	S2

Table 5.4-1. Safety Structures, Systems, and Components and Technical Safety Requirements for Potential S3 and S2 Consequences. (107 Sheets)

ID	Hazardous Condition	Cause	Preventive SSCs	Preventive TSRs	Mitigative SSCs	Mitigative TSRs	Memo	Cons
EVAPORATOR DUMP (Section 5.3.2.4)								
102AW-02-PRES 102AW-02-TEMP	Release of radioactive aerosols from Tank 241-AW-102 due to pressurization	Evaporator dump when intrusive activity is occurring which causes pressurization	None required	None required	None required	None required	No controls required based on accident analysis (Evaporator Dump).	S2
102AW-02-PRES08	Release of radioactive aerosols from Tank 241-AW-102 due to positive pressure	Evaporator dump of hot liquid generates aerosols and pressurizes the tank	None required	None required	None required	None required	No controls required based on accident analysis (Evaporator Dump).	S2
102AW-02-PRES09	Release of radioactive aerosols from head space of Tank 241-AW-102 due to positive pressure (lower energy than tank bump)	Loss of fan with airlift circulators running, generating aerosols and pressurizing the tank	None required	None required	None required	None required	No controls required based on accident analysis (Evaporator Dump).	S2
102AW-09-TEMP	Release of aerosols from Tank 241-AW-102 vapor space due to pressurization	Transfer of hot solution from facility, generates aerosols and pressurizes the tank	None required	None required	None required	None required	No controls required based on accident analysis (Evaporator Dump).	S2
102S-04.a3	Release of radioactive aerosols trapped in gases throughout Tank 241-S-102 waste to the atmosphere due to periodic release of toxic gases (lower energy than tank bump)	Waste growth (bump) due to chemistry within the waste coupled with crust movement	None required	None required	None required	None required	No controls required based on accident analysis (Evaporator Dump).	S2
244AR-03.a.05	Release of radioactive aerosols from tanks headspace due to ventilation system blockage	Ventilation and risers blocked while jetting occurring	None required	None required	None required	None required	No applicable SSCs or TSRs - Hazardous condition not credible for steam jetting because steam has been isolated from 244-AR.	S2
244AR-03.a.08	Release of radioactive aerosols created by boiling waste to the cell atmosphere	Steam being supplied to tank heating/cooling coils	None required	None required	None required	None required	No applicable SSCs or TSRs - Hazardous condition not credible for steam jetting because steam has been isolated from 244-AR.	S2

Table 5.4-1. Safety Structures, Systems, and Components and Technical Safety Requirements for Potential S3 and S2 Consequences. (107 Sheets)

ID	Hazardous Condition	Cause	Preventive SSCs	Preventive TSRs	Mitigative SSCs	Mitigative TSRs	Memo	Cons
I-242A-2-FLW-A	Release of aerosols to the atmosphere through unsealed cracks in the cover blocks due to over pressurization of the receiver tank and possible structural damage to the tank	Human error - pump is run at maximum speed	None required	None required	None required	None required	No controls required based on accident analysis (Evaporator Dump).	S2
I-242A-2-FLW-B	Release of aerosols to the atmosphere through 12 inch opening in inlet station due to over pressurization of the receiver tank and possible structural damage to the tank	Human error - pump is run at maximum speed	None required	None required	None required	None required	No controls required based on accident analysis (Evaporator Dump).	S2
I-242A-2-VSC-A	Release of aerosols in receiver tank due to tank burp from over concentration, potential to generate conditions similar to Tank 241-SY-101, "Tank Burp" due to hydrogen being trapped in thick solution (lower energy than tank bump)	Human error - over concentration of slurry at evaporator	None required	None required	None required	None required	No controls required based on accident analysis (Evaporator Dump).	S2
I-242A-3-FLW-A	Release of aerosols to the atmosphere through unsealed cracks in the cover blocks due to over pressurization of the feed tank and possible structural damage to the tank	Uncontrolled pot dump at evaporator (loss of electricity or air)	None required	None required	None required	None required	No controls required based on accident analysis (Evaporator Dump).	S2
I-242A-3-FLW-B	Release of aerosols to the atmosphere through 12 inch opening in inlet station due to over pressurization of the feed tank and possible structural damage to the tank	Uncontrolled pot dump at evaporator (loss of electricity or air)	None required	None required	None required	None required	No controls required based on accident analysis (Evaporator Dump).	S2

Table 5.4-1. Safety Structures, Systems, and Components and Technical Safety Requirements for Potential S3 and S2 Consequences. (107 Sheets)

ID	Hazardous Condition	Cause	Preventive SSCs	Preventive TSRs	Mitigative SSCs	Mitigative TSRs	Memo	Cons
I-242A-7-FLW-A	Release of aerosols through the risers due to loss of instrument air which causes an uncontrolled evaporator dump and failure to detect changes in feed tank pressure	Compressor fails and 241-AW Tank Farm air supplied from 242-A	None required	None required	None required	None required	No controls required based on accident analysis (Evaporator Dump).	S2
I-242A-7-FLW-B	Release of aerosols through the risers due to loss of instrument air which causes an uncontrolled evaporator dump and failure to detect changes in feed tank pressure	Valve inadvertently closed, 241-AW Tank Farm air supplied from 242-A	None required	None required	None required	None required	No controls required based on accident analysis (Evaporator Dump).	S2
I-242A-7-FLW-C	Release of aerosols through the risers due to loss of instrument air which causes an uncontrolled evaporator dump and failure to detect changes in feed tank pressure	Filter plugged, 241-AW Tank Farm air supplied from 242-A	None required	None required	None required	None required	No controls required based on accident analysis (Evaporator Dump).	S2
ITK-05	Release of radioactive and/or hazardous material from point of in-tank access (non-fire, non-explosion) due to intrusive activity	Tank burps from intrusive activity	None required	None required	None required	None required	No controls required based on accident analysis (Evaporator Dump).	S2
STEAM INTRUSION FROM INTERFACING SYSTEM (Section 5.3.2.5)								
I-242A-6-CMP-A	Release (steam) of aerosols to the atmosphere through unsealed cracks in the cover blocks due to over pressurization of the receiver tank	Human error - steam block valve inadvertently left opened	None required	None required	None required	AC: HEPA Filter Cntrls (Source Term)	Controls based on accident analysis (Steam Intrusion from Interfacing Syss).	S3
I-222S-1-LVL-A	Release (steam) of aerosols and entrained particulates to atmosphere through ventilation due to over pressurization of 244-S DCRT caused by sending just steam to tank farm	Human error - failing to shut off steam after Tank 219-S-102 is empty	None required	None required	None required	AC: HEPA Filter Cntrls (Source Term)	Controls based on accident analysis (Steam Intrusion from Interfacing Syss).	S2

Table 5.4-1. Safety Structures, Systems, and Components and Technical Safety Requirements for Potential S3 and S2 Consequences. (107 Sheets)

ID	Hazardous Condition	Cause	Preventive SSCs	Preventive TSRs	Mitigative SSCs	Mitigative TSRs	Memo	Cons
I-222S-2-PRS-A	Release (steam) of aerosols and particulates to atmosphere through ventilation due to over pressurization of 244-S DCRT caused by sending just steam to tank farm	Steam reducer valve fails open	None required	None required	None required	AC: HEPA Filter Cntrls (Source Term)	Controls based on accident analysis (Steam Intrusion from Interfacing Syss).	S2
I-242A-2-CMP-B	Release to the atmosphere through unsealed cracks in the cover blocks due to over pressurization of the receiver tank	Steam block valves inadvertently opened or left open	None required	None required	None required	AC: HEPA Filter Cntrls (Source Term)	Controls based on accident analysis (Steam Intrusion from Interfacing Syss).	S3
I-PFP-2-TMP-B	Release (steam) of aerosols and entrained particulate from 244 TX ventilation system due to saturating HEPAs with steam sending higher pressure steam to steam jet, gassing it out	Failure of steam reducer	None required	None required	None required	AC: HEPA Filter Cntrls (Source Term)	Controls based on accident analysis (Steam Intrusion from Interfacing Syss).	S2
I-PUREX-1-LVL-A	Release of aerosols from Tank 241-AW-105 through cracks in the cover block due to pressurizing tank from transfer of steam	Human error - failure to shut off steam jet when U-3 is empty	None required	None required	None required	AC: HEPA Filter Cntrls (Source Term)	Controls based on accident analysis (Steam Intrusion from Interfacing Syss).	S2
I-PUREX-2-PRS-A	Release (steam) of aerosols and particulates through cracks in the cover block from the receiver tank due to tank pressurization which gases out the steam jet	Steam reducer fails	None required	None required	None required	AC: HEPA Filter Cntrls (Source Term)	Controls based on accident analysis (Steam Intrusion from Interfacing Syss).	S2
I-PUREX-3-LVL-A	Release of aerosols from Tank 241-AW-105 through cracks in the cover block due to pressurizing tank from transfer of steam	Human error - failure to shut off steam jet when U-3 is empty	None required	None required	None required	AC: HEPA Filter Cntrls (Source Term)	Controls based on accident analysis (Steam Intrusion from Interfacing Syss).	S2
I-PUREX-4-PRS-A	Release of aerosols and particulates through cracks in the cover block from the receiver tank due to tank pressurization which gases out the steam jet	Steam reducer fails	None required	None required	None required	AC: HEPA Filter Cntrls (Source Term)	Controls based on accident analysis (Steam Intrusion from Interfacing Syss).	S2

Table 5.4-1. Safety Structures, Systems, and Components and Technical Safety Requirements for Potential S3 and S2 Consequences. (107 Sheets)

ID	Hazardous Condition	Cause	Preventive SSCs	Preventive TSRs	Mitigative SSCs	Mitigative TSRs	Memo	Cons
I-TPLANT-2-CMP-A	Release (steam) of aerosols and entrained particulates to atmosphere through ventilation due to over pressurization of 244-S DCRT caused by sending just steam to the tank farm	Human error - steam block valve inadvertently opened or failure to close valve when Tank 15-1 is low	None required	None required	None required	AC: HEPA Filter Cntrls (Source Term)	Controls based on accident analysis (Steam Intrusion from Interfacing Syss).	S2
XS-02-FLOW02	Release of aerosols and particulate from DCRT ventilation filter due to transfer of steam from PFP steam jet into DCRT headspace	Human error (failure to shut off steam jet at completion of transfer) which causes DCRT ventilation filter failure	None required	None required	None required	AC: HEPA Filter Cntrls (Source Term)	Controls based on accident analysis (Steam Intrusion from Interfacing Syss).	S2
LEAK FROM RAILCAR/TANK TRAILER (Section 5.3.2.6)								
204AR-01H	Release of airborne and waterborne contaminates outside building on track spur, and potential contamination in unloader room from rail car due to spilling rail car contents	Rail car rupture due to collision with other or a derailment	None required	None required	None required	AC: Source Inventory Cntrls	Controls based on accident analysis (Leak from Railcar/ Tank Trailer).	S2
204AR-01I	Release of airborne and waterborne contaminates outside building on track spur, and potential contamination in unloader room from rail car due to leak	Rail car leak due to tanker corrosion or other degradation	None required	None required	None required	AC: Source Inventory Cntrls	Controls based on accident analysis (Leak from Railcar/ Tank Trailer).	S2
204AR-02A	Release of liquid radioactive material and toxic chemicals outside and inside the 204AR building from the trailer due to collision which causes a spill	Tank trailer damage due to running into the building and causing the tank contents to spill	None required	None required	None required	AC: Source Inventory Cntrls	Controls based on accident analysis (Leak from Railcar/ Tank Trailer).	S2
204AR-02B	Release of radioactive material and toxic chemicals from trailer due to structural degradation of trailer	Tank trailer damaged due to corrosion or other degradation	None required	None required	None required	AC: Source Inventory Cntrls	Controls based on accident analysis (Leak from Railcar/ Tank Trailer).	S2

Table 5.4-1. Safety Structures, Systems, and Components and Technical Safety Requirements for Potential S3 and S2 Consequences. (107 Sheets)

ID	Hazardous Condition	Cause	Preventive SSCs	Preventive TSRs	Mitigative SSCs	Mitigative TSRs	Memo	Cons
204AR-09B	Release of airborne and radiation contamination in the unloader room from trailer or rail car leak due to high level in sump pit	Catastrophic leak from a large liquid source such as a trailer or rail car	None required	None required	None required	AC: Source Inventory Cntrls	Controls based on accident analysis (Leak from Railcar/ Tank Trailer).	S2
204AR-09C	Release of airborne and radiation contamination in the unloader room from rail car due to gross overfilling of catch tank	Gross overfilling of catch tank either from large source such as the trailers or rail cars or continual pumping of transfer water through a leaky pipe	None required	None required	None required	AC: Source Inventory Cntrls	Controls based on accident analysis (Leak from Railcar/ Tank Trailer).	S2
204AR-09D	Release of radioactive liquid waste in the unloader room from the rail car or trailer due to failed rail car or trailer	Failed tank car or rail car (initially full of liquid waste) overflowing the catch tank and sump pit	None required	None required	None required	AC: Source Inventory Cntrls	Controls based on accident analysis (Leak from Railcar/ Tank Trailer).	S2
SUBSURFACE LEAK REMAINING SUBSURFACE (Section 5.3.2.7)								
102S-01.b3	Radioactive liquid released to the soil subsurface from leaks in transfer lines SL-140, SN-242. (Plume)	Line leak during saltwell pumping (corrosion)	SS: Pipe Encasements	AC: Trans Pump Admin Lock Cntrls	SS: Trans Leak Detect Syss SS: Tank Level Detect Syss SS: Salt Well Flow Totalizer	LCO: Trans Leak Detect Syss AC: Trans Cntrls (Leak Detect/Cntrl)	Controls based on accident analysis (Subsurface Leak Remaining Subsurface).	S2
102AW-04-STRU04	Release of liquid radioactive waste from Tank 241-AW-102 central pump pit due to leak to soil	Piping leak and leak from pump pit due to equipment drop	SC: Trans Sys Cvr	LCO: Trans Sys Cvrs AC: Trans Pump Admin Lock Cntrls AC: Trans Sys Cvr Removal Cntrls AC: Dome Loading Cntrls (Lifting Cntrls)	None required	None required	Controls based on accident analysis (Tank Failure Due to Excessive Loads; and Surface Leak Resulting in Pool).	S2

Table 5.4-1. Safety Structures, Systems, and Components and Technical Safety Requirements for Potential S3 and S2 Consequences. (107 Sheets)

ID	Hazardous Condition	Cause	Preventive SSCs	Preventive TSRs	Mitigative SSCs	Mitigative TSRs	Memo	Cons
102AW-04-STRU05	Release of liquid radioactive waste from Tank 241-AW-102 central pump pit due to leak to soil	Piping leak and leak from pump pit due to seismic event	SS: Pipe Encasements	AC: Trans Pump Admin Lock Cntrls	SS: Trans Leak Detect Syss SS: Tank Level Detect Syss	LCO: Trans Leak Detect Syss AC: Trans Cntrls (Leak Detect/Cntrl) AC: Emergency Prep (Seismic)	Controls based on accident analyses (Subsurface Leak Remaining Subsurface; and Natural Phenomena - Seismic).	S2
XS-01-FLOW07	Release of liquid radioactive waste to the soil from transfer piping from SST to DCRT due to leakage (plume)	Pipe failure from various causes	None required	AC: Trans Cntrls (Mis-routing) AC: Trans Pump Admin Lock Cntrls	SS: Tank Level Detect Syss SS: Salt Well Flow Totalizer	AC: Trans Cntrls (Leak Detect/Cntrl)	Controls based on accident analysis (Subsurface Leak Remaining Subsurface) for single walled pipes.	S2
XS-02-FLOW04	Release of liquid radioactive waste to soil from transfer pipe (non-pool) subsurface plume	Failure to adjust waste pH prior to transfer causes leak	SS: Pipe Encasements	AC: Trans Pump Admin Lock Cntrls	SS: Trans Leak Detect Syss SS: Tank Level Detect Syss	LCO: Trans Leak Detect Syss AC: Trans Cntrls (Leak Detect/Cntrl)	Controls based on accident analysis (Subsurface Leak Remaining Subsurface).	S2
XS-37-FLOW02	Release of radioactive liquid waste to soil from transfer piping due to leak of liquid waste from concrete encasement (subsurface plume)	Leak of transfer piping with encasement leak or blocked drain to catch tank (liquid oozes out concrete encasement)	SS: Pipe Encasements	AC: Trans Cntrls (Mis-routing) AC: Trans Pump Admin Lock Cntrls	SS: Trans Leak Detect Syss SS: Tank Level Detect Syss	LCO: Trans Leak Detect Syss AC: Trans Cntrls (Leak Detect/Cntrl)	Controls based on accident analysis (Subsurface Leak Remaining Subsurface).	S2
XS-48-FLOW	Release of liquid waste to soil from transfer piping between B-Plant and 241-ER-152 diversion box due to leak (plume)	Piping failure from various causes	SS: Pipe Encasements	AC: Trans Cntrls (Mis-routing) AC: Trans Pump Admin Lock Cntrls	SS: Trans Leak Detect Syss SS: Tank Level Detect Syss	LCO: Trans Leak Detect Syss AC: Trans Cntrls (Leak Detect/Cntrl)	Controls based on accident analysis (Subsurface Leak Remaining Subsurface).	S2
UNPLANNED EXCAVATION/DRILLING IN CRIB/DITCH/POND (Section 5.3.2.8)								
CDP-10	Release of radioactive contamination to soil surface from excavation or drilling in cribs, ditches or ponds that disturbs radioactive material	Excavation or drilling	None required	None required	None required	None required	No controls required based on accident analysis (Unplanned Excavation/Drilling in Pond/Crib/Ditch).	S2

Table 5.4-1. Safety Structures, Systems, and Components and Technical Safety Requirements for Potential S3 and S2 Consequences. (107 Sheets)

ID	Hazardous Condition	Cause	Preventive SSCs	Preventive TSRs	Mitigative SSCs	Mitigative TSRs	Memo	Cons
EE-17	Radioactive and hazardous material release from inactive equipment due to excavation error	Excavation into abandoned or inactive equipment	None required	None required	None required	None required	No controls required based on accident analysis (Unplanned Excavation/Drilling in Pond/Crib/Ditch).	S2
CAUSTIC SPRAY LEAK (Section 5.3.2.9)								
107AN-02-PRES	Release of caustic aerosol from caustic truck transfer piping due to spray leak	Piping/hose leak initiated by various causes	None required	AC: Caustic Transfer Controls	None required	AC: Caustic Transfer Controls	Controls based on accident analysis (Caustic Spray Leak).	S2
107AN-01-LEVE01	Release of caustic material from truck tank due to leak (aerosol spray)	Open valve on truck with pressurized tank transfer.	None required	AC: Caustic Transfer Controls	None required	AC: Caustic Transfer Controls	Controls based on accident analysis (Caustic Spray Leak).	S2
107AN-01-LEVE02	Release of caustic material from truck tank due to leak (aerosol spray)	Truck tank leak	None required	None required	None required	None required	No controls required based on low accident frequency.	S2
107AN-01-TEMP02	Spray release of caustic material from truck tank due to high temperature	Fire in gas tank	None required	None required	None required	None required	No controls required based on low accident frequency.	S2
107AN-02-PRES02	Release of caustic material from transfer piping due to high pressure (aerosol spray)	Hose disconnect	None required	AC: Caustic Transfer Controls	None required	AC: Caustic Transfer Controls	Controls based on accident analysis (Caustic Spray Leak).	S2
SODIUM FIRE (Section 5.3.2.10)								
2727W-06	Release of hazardous materials from 2727-W due to sodium-water reactions	High wind or tornado destroys building with rain/snow	SS: 2727W Building	None required	None required	None required	Controls based on accident analysis (Sodium Fire).	S2
2727W-02	Release of hazardous material from 2727-W due to sodium fire	Vehicle crashes into building and ignites sodium	SS: 2727W Building	None required	None required	None required	Controls based on accident analysis (Sodium Fire).	S2
2727W-03	Release of hazardous material from 2727-W due to sodium fire	Lightning	None required	None required	None required	None required	No controls required based on low accident frequency.	S2
2727W-04	Release of hazardous material from 2727-W due to sodium fire	Overhead power line falls through building	None required	None required	None required	None required	No controls required based on low accident frequency.	S2

Table 5.4-1. Safety Structures, Systems, and Components and Technical Safety Requirements for Potential S3 and S2 Consequences. (107 Sheets)

ID	Hazardous Condition	Cause	Preventive SSCs	Preventive TSRs	Mitigative SSCs	Mitigative TSRs	Memo	Cons
2727W-05	Release of hazardous material from 2727-W due to sodium fire	Nitrogen tank overpressurizes sodium tank, ignites sodium	None required	None required	None required	None required	No controls required based on low accident frequency.	S2
MIXING OF INCOMPATIBLE MATERIAL - TOXIC VAPOR GENERATION (Section 5.3.2.11)								
XS-26-PRES XS-26-TEMP	Release of toxic vapors from Tank 241-SY-102 due to chemical reaction	Mistransfer of incompatible waste causes chemical reaction	None required	None required	None required	None required	No controls required based on accident analysis (Mixing of Incompatible Waste - Toxic Vapor Generation).	S2
102AW-02-LEVE01	Release of toxic gases from Tank 241-AW-102 due to accumulations of gases	Slurry growth	None required	None required	None required	None required	No controls required based on accident analysis (Mixing of Incompatible Waste - Toxic Vapor Generation).	S2
102AW-02-PRES02	Release of toxic gases from Tank 241-AW-102 due to chemical reaction in waste	Transfer of incompatible waste to Tank 241-AW-102 causes tank gas accumulation	None required	None required	None required	None required	No controls required based on accident analysis (Mixing of Incompatible Waste - Toxic Vapor Generation).	S2
ITK-05-I	Release of radioactive and/or hazardous material from point of in-facility access due to gas release from in-facility waste during intrusive activity (non-fire, non-explosion)	Gas release from in-facility waste during intrusive activity	None required	None required	None required	None required	No controls required based on accident analyses (Mixing of Incompatible Waste - Toxic Vapor Generation).	S2
XS-03-PRES02 XS-21-PRES (244-S-DCRT)	Release of toxic vapors from 244 TX DCRT due to decreased ability to keep vapors in solution (fan on)	Heating of DCRT or chemical adjustment	None required	None required	None required	None required	No controls required based on accident analysis (Mixing of Incompatible Waste - Toxic Vapor Generation).	S2
XS-03-PRES05	Release of toxic vapors from DCRT due to increased concentrations in DCRT atmosphere	Transfer of steam from PFP causing evolution of toxic gases due to heating tank	None required	None required	None required	None required	No controls required based on accident analysis (Mixing of Incompatible Waste - Toxic Vapor Generation).	S2

Table 5.4-1. Safety Structures, Systems, and Components and Technical Safety Requirements for Potential S3 and S2 Consequences. (107 Sheets)

ID	Hazardous Condition	Cause	Preventive SSCs	Preventive TSRs	Mitigative SSCs	Mitigative TSRs	Memo	Cons
XS-03-TEMP02	Release of toxic vapor from DCRT due to chemical reaction	Chemical reaction in DCRT toxic vapor	None required	None required	None required	None required	No controls required based on accident analysis (Mixing of Incompatible Waste - Toxic Vapor Generation).	S2
XS-13-PRES03	Release of toxic vapors due to chemical reaction from 241-U-301B	Draining of incompatible chemicals to catch tank	None required	None required	None required	None required	No controls required based on accident analysis (Mixing of Incompatible Waste - Toxic Vapor Generation).	S2
XS-20-FLOW04	Release of toxic vapors from 244 TX DCRT due to chemical reaction with incompatible material in 244-S DCRT	Mixing contents of 244 TX and 244-S due to misrouting causes chemical reaction	None required	None required	None required	None required	No controls required based on accident analysis (Mixing of Incompatible Waste - Toxic Vapor Generation).	S2
MIXING OF INCOMPATIBLE MATERIAL - TANK PRESSURIZATION (Section 5.3.2.12)								
I-222S-1-RXN-A	Release of aerosols and/or toxic vapors from receiver tank due adverse chemical reactions from incompatible waste	Transfer of incompatible waste	None required	AC: Trans Cntrls (pH)	None required	AC: HEPA Filter Cntrls (Aerosol Testing)	Controls based on accident analysis (Mixing of Incompatible Waste - Tank Pressurization).	S2
102AW-02-TEMP 102AW-08-TEMP	Release of radioactive aerosols from Tank 241-AW-102 due to positive pressure	Chemical reaction heating up and/or agitating tank causes positive pressure in tank	None required	AC: Trans Cntrls (pH)	None required	None required	The Trans control for this hazardous condition is solely pH control because of the larger volumes in waste storage tanks compared to the analyzed accident.	S2
102AW-02-TEMP01	Release of radioactive aerosols from Tank 241-AW-102 due to boiling waste	High heat waste causing boiling	SS: Temperature Mon Sys SS: Waste Tank Level Detect Sys	LCO: DST and AWF Tanks Waste Temperature Cntrls AC: Trans Cntrls (Tank Bump Topography)	None required	None required	Controls based on accident analysis (Tank Bump) for DST & AWF tanks.	S2
106C-01G	Release of radioactive and/or hazardous material from Tank 241-C-106 tank, due to waste reaction causing local discharge of contamination through blown HEPAs or out cover blocks	Addition of acid to tank	None required	AC: Trans Cntrls (pH)	None required	None required	The transfer control for this hazardous condition is solely pH control because of the larger volumes in waste storage tanks compared to the analyzed accident.	S2

Table 5.4-1. Safety Structures, Systems, and Components and Technical Safety Requirements for Potential S3 and S2 Consequences. (107 Sheets)

ID	Hazardous Condition	Cause	Preventive SSCs	Preventive TSRs	Mitigative SSCs	Mitigative TSRs	Memo	Cons
106C-01H	Release of radioactive and/or hazardous material from Tank 241-C-106, through blown HEPAs or out cover blocks due to tank boiling with vent path blocked or failed	Tank boiling with lack of vent path	SS: Temperature Mon Sys SS: Waste Tank Level Detect Sys	LCO: SST Waste Temperature Cntrls AC: Trans Cntrls (Tank Bump Topography)	None required	None required	Controls based on accident analysis (Tank Bump) for SSTs.	S2
106C-01M	Release of radioactive and/or hazardous material from Tank 241-C-106, due to high temperature in the waste tank	Exothermic, chemical reaction in tank due to inadvertent addition to tank	None required	AC: Trans Cntrls (pH)	None required	None required	The transfer control for this hazardous condition is solely pH control because of the larger volumes in waste storage tanks compared to the analyzed accident.	S2
106C-12F	Release of radioactive and/or hazardous material from Tank 241-C-106 tank due to waste reaction in tank	Added chemicals to tank instead of normal water addition	None required	AC: Trans Cntrls (pH)	None required	None required	The transfer control for this hazardous condition is from the representative accident Mixing of Incompatible Material - Tank Pressurization and is solely pH control because of the larger volumes in waste storage tanks compared to the analyzed accident.	S2
107AN-02-FLOW01	Release of radioactive aerosols from Tank 241-AN-107 due to surface chemical reaction	Transfer of incompatible chemical to tank via chemical addition system due to vendor or paperwork error	None required	AC: Trans Cntrls (pH)	None required	None required	The transfer control for this hazardous condition is from the representative accident Mixing of Incompatible Material - Tank Pressurization and is solely pH control because of the larger volumes in waste storage tanks compared to the -- analyzed accident.	S2

Table 5.4-1. Safety Structures, Systems, and Components and Technical Safety Requirements for Potential S3 and S2 Consequences. (107 Sheets)

ID	Hazardous Condition	Cause	Preventive SSCs	Preventive TSRs	Mitigative SSCs	Mitigative TSRs	Memo	Cons
107AN-02-FLOW02	Release of toxic vapors from Tank 241-AN-107 due to surface chemical reaction	Transfer of incompatible chemical to tank via chemical addition system due to vendor or paperwork error	None required	AC: Trans Cntrls (pH)	None required	None required	The transfer control for this hazardous condition is from the representative accident Mixing of Incompatible Material - Tank Pressurization and is solely pH control because of the larger volumes in waste storage tanks compared to the analyzed accident.	S2
CCF-01	Radioactive and hazardous release from tanks due to extended loss of ventilation (over 6 months)	Sustained loss of offsite power	None required	None required	None required	None required	No controls required based on low accident frequency.	S2
CCF-20	Release of radioactive and hazardous aerosols/ vapors from tanks due to chemical reactions between waste and added materials	Reactive chemical additions to two tanks	None required	AC: Trans Cntrls (pH)	None required	None required	The transfer control for this hazardous condition is solely pH control because of the larger volumes in waste storage tanks compared to the analyzed accident.	S2
I-222S-2-FLW-C	Release of aerosols and/ or toxic vapors from receiver tank due adverse chemical reactions from incompatible waste	Human error - incorrect valve line up	None required	AC: Trans Cntrls (pH)	None required	None required	Controls based on accident analysis (Mixing of Incompatible Waste - Tank Pressurization).	S2
I-BPLANT-2-FLW-D	Release of aerosols and/ or toxic vapors from receiver tank due to transfer of incompatible waste from B Plant	Human error - communication error between B Plant and TWRS causes transfer of incompatible waste	None required	AC: Trans Cntrls (pH)	None required	None required	Controls based on accident analysis (Mixing of Incompatible Waste - Tank Pressurization).	S2
XS-02-FLOW03	Release of toxic gases (oxides of nitrogen) from DCRT due to chemical reaction	Chemical reaction between sodium nitrite (DCRT) and nitric acid (PFP transfer) due to failure to adjust waste pH prior to transfer	None required	AC: Trans Cntrls (pH)	None required	None required	Controls based on accident analysis (Mixing of Incompatible Waste - Tank Pressurization).	S2

Table 5.4-1. Safety Structures, Systems, and Components and Technical Safety Requirements for Potential S3 and S2 Consequences. (107 Sheets)

ID	Hazardous Condition	Cause	Preventive SSCs	Preventive TSRs	Mitigative SSCs	Mitigative TSRs	Memo	Cons
XS-03-TEMP01	Release of radioactive aerosols from 244 TX DCRT headspace due to positive pressure	Chemical reaction in DCRT causes positive pressure	None required	AC: Trans Cntrls (pH)	SS: HEPA Filters (244-S, 244 TX, 244-A)	AC: HEPA Filter Cntrls (Aerosol Testing)	Controls based on accident analysis (Mixing of Incompatible Material - Tank Pressurization).	S2
XS-13-PRES01	Release of radioactive aerosols from 241-U-301B catch tank due to chemical reaction	Draining of incompatible chemicals to catch tank	None required	None required	None required	None required	No controls required based on accident analysis (Mixing of Incompatible Material - Tank Pressurization).	S2
XS-20-FLOW01	Release of radioactive aerosols from 244 TX DCRT due to chemical reaction	Transfer of incompatible waste to 244 TX DCRT due to improper valve lineup	None required	AC: Trans Cntrls (pH)	SS: HEPA Filters (244-S, 244 TX, 244-A)	AC: HEPA Filter Cntrls (Aerosol Testing)	Controls based on accident analysis (Mixing of Incompatible Material - Tank Pressurization).	S2
XS-20-FLOW03	Release of radioactive aerosols from 244 TX DCRT due to positive pressure caused by chemical reaction	Chemical reaction of 244-S material with contents of 244 TX caused by misrouting	None required	None required	None required	None required	No controls required based on accident analysis (Mixing of Incompatible Waste - Tank Pressurization).	S2
XS-26-PRES01	Release of radioactive aerosols from Tank 241-SY-102 due to chemical reaction	Mis-transfer of incompatible waste causes chemical reaction	None required	None required	None required	None required	No controls required based on accident analysis (Mixing of Incompatible Material - Tank Pressurization).	S2
TANK FAILURE DUE TO EXCESSIVE LOADS (Section 5.3.2.13)								
CRN-03	Release of radioactive and/or toxic materials from tank due to dome collapse	Human error results in excessive weight on dome	None required	AC: Dome Loading Cntrls (Excessive Loads)	None required	None required	Controls based on accident analysis (Tank Failure Due to Excessive Loads).	S3
CRN-04	Release of radioactive and/or toxic materials from tank due to dome collapse	Crane or rigging failures drop load resulting in large impact to dome	None required	AC: Dome Loading Cntrls (Lifting Cntrls)	None required	None required	Controls based on accident analysis (Tank Failure Due to Excessive Loads).	S3
CRN-11	Radioactive or toxic material release from tank due to boom failure and tank/equipment damage and dome collapse	Human error: improper load assembly, rigging, crane overloaded	None required	AC: Dome Loading Cntrls (Lifting Cntrls)	None required	None required	Controls based on accident analysis (Tank Failure Due to Excessive Loads).	S3

Table 5.4-1. Safety Structures, Systems, and Components and Technical Safety Requirements for Potential S3 and S2 Consequences. (107 Sheets)

ID	Hazardous Condition	Cause	Preventive SSCs	Preventive TSRs	Mitigative SSCs	Mitigative TSRs	Memo	Cons
102AW-04-STRU01A	Release of liquids, solids and/or vapors from Tank 241-AW-102 due to dome collapse caused by excessive dome loading	Equipment drop during crane work causes excessive dome loading	None required	AC: Dome Loading Cntrls (Lifting Cntrls)	None required	None required	Controls based on accident analysis (Tank Failure Due to Excessive Loads).	S3
102AW-04-STRU02	Release of liquids, solids and/or vapors from Tank 241-AW-102 due to dome collapse caused by excessive dome loading	Violation of limits on dome loading	None required	AC: Dome Loading Cntrls (Excessive Loads)	None required	None required	Controls based on accident analysis (Tank Failure Due to Excessive Loads).	S3
102S-05.a1a	Release of radioactive aerosols from Tank 241-S-102 to atmosphere due to dome collapse	Excess gravel overburden	None required	AC: Dome Loading Cntrls (Excessive Loads)	None required	None required	Controls based on accident analysis (Tank Failure Due to Excessive Loads).	S3
102S-05.a1aa	Release of radioactive aerosols from Tank 241-S-102 to atmosphere due to dome collapse	Large vehicle traffic over tank	None required	AC: Dome Loading Cntrls (Excessive Loads)	None required	None required	Controls based on accident analysis (Tank Failure Due to Excessive Loads).	S3
106C-01X	Release of radioactive and/or hazardous material from Tank 241-C-106, dome structural damage and/or personnel injury due to overload of tank dome	Overweight vehicles over top of tank	None required	AC: Dome Loading Cntrls (Excessive Loads)	None required	None required	Controls based on accident analysis (Tank Failure Due to Excessive Loads).	S3
106C-01Y	Release of radioactive and/or hazardous material from Tank 241-C-106, dome structural damage and/or personnel injury due to overload of tank dome	Flooding over top of tank	SS: Service Water Flow Totalizer	LCO: Tank Service Water Intrusion Mon Program	None required	None required	Controls based on accident analyses (Surface Leak Resulting in Pool).	S3
114SX-06.a.1a	Release of radioactive aerosols from Tank 241-SX-114 waste to atmosphere due to dome collapse	Gravel overburden Large vehicle	None required	AC: Dome Loading Cntrls (Excessive Loads)	None required	None required	Controls based on accident analysis (Tank Failure Due to Excessive Loads).	S3
CP-SET-04	Release of radioactive or toxic material from waste tank due to dome collapse	Excessive weight on tank dome (static load of platform)	None required	AC: Dome Loading Cntrls (Excessive Loads)	None required	None required	Controls based on accident analysis (Tank Failure Due to Excessive Loads).	S3
CP-SET-05	Release of radioactive or toxic material from waste tank due to dome collapse caused by load drop	Mechanical failure of equipment causes load drop	None required	AC: Dome Loading Cntrls (Lifting Cntrls)	None required	None required	Controls based on accident analysis (Tank Failure Due to Excessive Loads).	S3

Table 5.4-1. Safety Structures, Systems, and Components and Technical Safety Requirements for Potential S3 and S2 Consequences. (107 Sheets)

ID	Hazardous Condition	Cause	Preventive SSCs	Preventive TSRs	Mitigative SSCs	Mitigative TSRs	Memo	Cons
CP-SET-06	Release of radioactive or toxic material from waste tank due to dome collapse caused by load drop	Human error causes load drop	None required	AC: Dome Loading Cntrls (Lifting Cntrls)	None required	None required	Controls based on accident analysis (Tank Failure Due to Excessive Loads).	S3
CRN-03-IA	Release of radioactive and/or toxic materials from facility due to containment top collapse	Human error results in excessive weight on top of containment	None required	AC: Dome Loading Cntrls (Excessive Loads)	None required	None required	Controls based on accident analysis (Tank Failure Due to Excessive Loads).	S2
CRN-04-IA	Release of radioactive and/or toxic materials from facility due to MISF containment collapse	Crane or rigging failures drop load resulting in large impact to top of containment	None required	AC: Dome Loading Cntrls (Lifting Cntrls)	None required	None required	Controls based on accident analysis (Tank Failure Due to Excessive Loads).	S2
CRN-09	Release of radioactive and/or toxic materials from ventilation system due to crane damage	Human error in positioning crane load	None required	AC: Dome Loading Cntrls (Lifting Cntrls)	None required	None required	Controls based on accident analysis (Tank Failure Due to Excessive Loads).	S2
CRN-10	Release of radioactive and/or toxic materials from ventilation system due to crane damage	Mechanical failure in positioning crane load	None required	AC: Dome Loading Cntrls (Lifting Cntrls)	None required	None required	Controls based on accident analysis (Tank Failure Due to Excessive Loads).	S2
CRN-11-IA	Release of radioactive and/or toxic materials from facility due to containment top collapse or equipment damage by boom failure	Human error: improper load assembly, rigging, crane overloaded	None required	AC: Dome Loading Cntrls (Lifting Cntrls)	None required	None required	Controls based on accident analysis (Tank Failure Due to Excessive Loads).	S2
CRN-12	Radioactive or toxic material release from tank due to boom failure and tank/equipment damage and dome collapse	Mechanical failure: corrosion, faulty materials	None required	AC: Dome Loading Cntrls (Lifting Cntrls)	None required	None required	Controls based on accident analysis (Tank Failure Due to Excessive Loads).	S3
CRN-12-IA	Release of radioactive and/or toxic materials from facility due to containment top collapse or equipment damage by boom failure	Mechanical failure: corrosion, faulty materials	None required	AC: Dome Loading Cntrls (Lifting Cntrls)	None required	None required	Controls based on accident analysis (Tank Failure Due to Excessive Loads).	S2

Table 5.4-1. Safety Structures, Systems, and Components and Technical Safety Requirements for Potential S3 and S2 Consequences. (107 Sheets)

ID	Hazardous Condition	Cause	Preventive SSCs	Preventive TSRs	Mitigative SSCs	Mitigative TSRs	Memo	Cons
ITK-FR-04	Release of radioactive aerosols from tank due to tank collapse	Equipment becomes lodged in riser, efforts to remove pull riser out of tank causing loss of structural integrity leading to tank collapse	None required	AC: Dome Loading Cntrls (Lifting Cntrls)	None required	None required	Controls based on accident analysis (Tank Failure Due to Excessive Loads).	S3
ITK-FR-19	Release of radioactive aerosols from tank due to dome collapse	Hydraulic jacks on assembly stand are operated while assembly is bolted to flange tearing out riser and destroying tank integrity leading to dome collapse	None required	None required	None required	None required	No controls required based on low accident frequency.	S3
TANK FAILURE DUE TO VACUUM OR DEGRADATION (Section 5.3.2.13)								
114SX-06.a.3	Release of radioactive aerosols from Tank 241-SX-114 waste to the atmosphere due to dome collapse caused by loss of strength due to aging	Long term aging resulting in tank degradation	None required	None required	None required	None required	No controls required based on accident analysis (Tank Failure Due to Excessive Loads).	S3
102AW-02-PRES03	Release of liquids, solids and/or vapors from Tank 241-AW-102 due to dome collapse caused by excessive vacuum	Blocked ventilation inlet causes excessive vacuum leading to dome collapse	None required	None required	None required	None required	No controls required based on accident analysis (Tank Failure Due to Excessive Loads).	S3
102AW-02-PRES04	Release of liquids, solids and/or vapors from Tank 241-AW-102 due to dome collapse caused by excessive vacuum	Condensation of vapors causes excessive vacuum leading to dome collapse	None required	None required	None required	None required	No controls required based on accident analysis (Tank Failure Due to Excessive Loads).	S3
102AW-02-PRES05	Release of liquids, solids and/or vapors from Tank 241-AW-102 due to dome collapse caused by excessive vacuum	Sub-cooling of vapor during equipment flushing causes excessive vacuum leading to dome collapse	None required	None required	None required	None required	No controls required based on accident analysis (Tank Failure Due to Excessive Loads).	S3
102AW-02-PRES06	Release of liquids, solids and/or vapors from Tank 241-AW-102 due to dome collapse caused by excessive vacuum	Ventilation imbalance causes excessive vacuum leading to dome collapse	None required	None required	None required	None required	No controls required based on accident analysis (Tank Failure Due to Excessive Loads).	S3

Table 5.4-1. Safety Structures, Systems, and Components and Technical Safety Requirements for Potential S3 and S2 Consequences. (107 Sheets)

ID	Hazardous Condition	Cause	Preventive SSCs	Preventive TSRs	Mitigative SSCs	Mitigative TSRs	Memo	Cons
102AW-02-PRES07	Release of liquids, solids and/or vapors from Tank 241-AW-102 due to dome collapse caused by excessive vacuum	Wrong size portable ventilator chosen for support work causes excessive vacuum leading to dome collapse	None required	None required	None required	None required	No controls required based on accident analysis (Tank Failure Due to Excessive Loads).	S3
102AW-03-LEVE03	Release of liquids, solids and/or vapors from Tank 241-AW-102 due to dome collapse caused by floating the primary tank within the annulus	Misrouting of liquid waste to the annulus causes floating of primary tank and subsequent dome collapse	None required	None required	None required	None required	No controls required based on accident analysis (Tank Failure Due to Excessive Loads).	S3
102S-04.d1	Release of radioactive aerosols contained in Tank 241-S-102 vapor space to the atmosphere due to low pressure causing dome collapse	Misoperation of exhauster during saltwell pumping	None required	None required	None required	None required	No controls required based on accident analysis (Tank Failure Due to Excessive Loads).	S3
102S-05.a3	Release of radioactive aerosols from Tank 241-S-102 to atmosphere due to dome collapse	Past thermocycling of tank	None required	None required	None required	None required	No controls required based on accident analysis (Tank Failure Due to Excessive Loads).	S3
102S-05.a3a	Release of radioactive aerosols from Tank 241-S-102 to atmosphere due to dome collapse	Long term aging	None required	None required	None required	None required	No controls required based on accident analysis (Tank Failure Due to Excessive Loads).	S3
106C-01A	Release of radioactive and/or hazardous material from Tank 241-C-106, structural damage and dome collapse due to tank low pressure	Air inlet plugged due to icing/dust	None required	None required	None required	None required	No controls required based on accident analysis (Tank Failure Due to Excessive Loads).	S3
106C-01B	Release of radioactive and/or hazardous material from Tank 241-C-106, structural damage and dome collapse due to tank low pressure	Inlet air valve closed	None required	None required	None required	None required	No controls required based on accident analysis (Tank Failure Due to Excessive Loads).	S3

Table 5.4-1. Safety Structures, Systems, and Components and Technical Safety Requirements for Potential S3 and S2 Consequences. (107 Sheets)

ID	Hazardous Condition	Cause	Preventive SSCs	Preventive TSRs	Mitigative SSCs	Mitigative TSRs	Memo	Cons
106C-01C	Release of radioactive and/or hazardous material from Tank 241-C-106, structural damage, and dome collapse due to tank low pressure	Exhauster damper positioned incorrectly	None required	None required	None required	None required	No controls required based on accident analysis (Tank Failure Due to Excessive Loads).	S3
106C-01D	Release of radioactive and/or hazardous material from Tank 241-C-106, structural damage and dome collapse due to tank low pressure	Wrong sized portable exhauster	None required	None required	None required	None required	No controls required based on accident analysis (Tank Failure Due to Excessive Loads).	S3
106C-01E	Release of radioactive and/or hazardous material from Tank 241-C-106, structural damage and dome collapse due to tank low pressure	Subcooling of tank vapor space due to water addition of flushing	None required	None required	None required	None required	No controls required based on accident analysis (Tank Failure Due to Excessive Loads).	S3
114SX-04.a.2	Radioactive aerosols released from failed tank dome due to vacuum produced by valving error.	Human error: Valve out flammable watch list (Tank 241-SX-109) butterfly valve	None required	None required	None required	None required	No controls required based on accident analysis (Tank Failure Due to Excessive Loads).	S3
114SX-04.a.3	Release of radioactive aerosols from Tank 241-SX-114 to atmosphere due to high temperatures causing dome concrete strength loss	No ventilation flow High ambient temperature conditions Resulting in tank degradation	None required	None required	None required	None required	No controls required based on accident analysis (Tank Failure Due to Excessive Loads).	S3
114SX-04.b.1.a.2	Release of radioactive material from Tank 241-SX-114 to atmosphere due to high temperature in the dome leading to dome collapse (long term closure of butterfly valve)	Human error: Closure of Tank 241-SX-114 exhaust butterfly valve isolating tank from exhaust plenum Resulting in tank degradation	None required	None required	None required	None required	No controls required based on accident analysis (Tank Failure Due to Excessive Loads).	S3

Table 5.4-1. Safety Structures, Systems, and Components and Technical Safety Requirements for Potential S3 and S2 Consequences. (107 Sheets)

ID	Hazardous Condition	Cause	Preventive SSCs	Preventive TSRs	Mitigative SSCs	Mitigative TSRs	Memo	Cons
114SX-04.b.1.b.2a	Release of radioactive aerosols to atmosphere from Tank 241-SX-114 waste due to heat induced tank dome collapse	Ducting failure due to bad welds	None required	None required	None required	None required	No controls required based on accident analysis (Tank Failure Due to Excessive Loads).	S3
114SX-04.b.1.c.2	Release of radioactive aerosols to atmosphere from Tank 241-SX-114 waste due to dome collapse	Exhauster failure Fan failure Filter rupture (low differential pressure shutdown) Resulting in tank degradation	None required	None required	None required	None required	No controls required based on accident analysis (Tank Failure Due to Excessive Loads).	S3
114SX-04.b.1.d.2	Release of radioactive aerosols from Tank 241-SX-114 waste to atmosphere due to dome collapse	Filter plugging results in lack of heat removal with high temperatures degrading dome strength	None required	None required	None required	None required	No controls required based on accident analysis (Tank Failure Due to Excessive Loads).	S3
114SX-05.b.3	Release of radioactive aerosols from Tank 241-SX-114 waste to atmosphere due to dome collapse caused by sudden vacuum in tank	Quenching (adding cold liquid to hot tank contents) creating a vacuum	None required	None required	None required	None required	No controls required based on accident analysis (Tank Failure Due to Excessive Loads).	S3
114SX-05.c.2b	Release of radioactive aerosols from Tank 241-SX-114 waste to atmosphere due to dome collapse	Chemical reaction caused by addition of chemical/ solution. Resulting in tank degradation	None required	None required	None required	None required	No controls required based on accident analysis (Tank Failure Due to Excessive Loads).	S3
CCF-17	Release of radioactive and hazardous materials from tank due to dome collapse	Corrosion of rebar in concrete SST domes	None required	None required	None required	None required	No controls required based on accident analysis (Tank Failure Due to Excessive Loads).	S3

Table 5.4-1. Safety Structures, Systems, and Components and Technical Safety Requirements for Potential S3 and S2 Consequences. (107 Sheets)

ID	Hazardous Condition	Cause	Preventive SSCs	Preventive TSRs	Mitigative SSCs	Mitigative TSRs	Memo	Cons
FLAMMABLE GAS DEFLAGRATIONS - DSTs (Section 5.3.2.14)								
ITK-10-b	Release of radioactive material from in-tank fire or explosion due to intrusive activity (dome collapse)	Spark from equipment or tools	SC: SY-101 Mixer Pump Cntrls SC: Primary Tank Leak Detect Syss SC: DST/AWF Ventilation	LCO: DST and AWF Tank Ventilation Syss LCO: Primary Tank Leak Detect Syss AC: Flammability Cntrls AC: Ign Cntrls AC: Flammable Gas Mon Cntrls	None required	None required	Controls based on BIO Appendix E; LA-UR-92-3196.	S3
102AW-02-PRES01	Release of radioactive aerosols from Tank 241-AW-102 due to fire/ explosion in waste tank (Dome Collapse)	Flammable concentration of gases in tank vapor space with spark source	SC: Primary Tank Leak Detect Syss SC: DST/AWF Ventilation	LCO: DST and AWF Tank Ventilation Syss LCO: Primary Tank Leak Detect Syss AC: Flammability Cntrls AC: Ign Cntrls AC: Ign Cntrls (Lightning) AC: Flammable Gas Mon Cntrls	None required	None required	Controls based on BIO Appendix E, LA-UR-92-3196 and accident analysis (Natural Phenomena - Lightning).	S3
102AW-03-LEVE01	Release of radioactive aerosols from Tank 241-AW-102 due to fire/ explosion in annulus	Flammable concentration of gases in annulus vapor space due to waste leak into annulus and spark source	SC: Primary Tank Leak Detect Syss	LCO: Primary Tank Leak Detect Syss AC: Ign Cntrls	None required	None required	Controls based on BIO Appendix E.	S2
102AW-03-LEVE02	Release of radioactive aerosols from Tank 241-AW-102 due to fire/ explosion in annulus	Flammable concentration of gases in annulus vapor space due to waste mis-transfer into annulus and spark source	SC: Primary Tank Leak Detect Syss	LCO: Primary Tank Leak Detect Syss AC: Trans Cntrls (Mis-routing) AC: Ign Cntrls	None required	None required	Controls based on BIO Appendix E; and the accident analysis (Spray Leak in Structure or from Overground Waste Trans Lines).	S2
I-242A-1-FLW-A	Release of radioactive material from Feed Tank 241-AW-102 due to fire/ explosion caused by igniting hydrogen gas when pump is damaged and possibly becomes an ignition source from dead heading	Valves fail to regulate (closed position) which fails pump and creates ignition source, sufficient hydrogen accumulation for fire/explosion.	SC: Primary Tank Leak Detect Syss SC: DST/AWF Ventilation	LCO: DST and AWF Tank Ventilation Syss LCO: Primary Tank Leak Detect Syss AC: Flammability Cntrls AC: Ign Cntrls AC: Flammable Gas Mon Cntrls	None required	None required	Controls based on BIO Appendix E.	S3

Table 5.4-1. Safety Structures, Systems, and Components and Technical Safety Requirements for Potential S3 and S2 Consequences. (107 Sheets)

ID	Hazardous Condition	Cause	Preventive SSCs	Preventive TSRs	Mitigative SSCs	Mitigative TSRs	Memo	Cons
I-242A-1-FLW-B	Release of radioactive material from Feed Tank 241-AW-102 due to fire/ explosion caused by igniting hydrogen gas when pump is damaged and possibly becomes an ignition source	Feed pump fails and causes ignition source, sufficient hydrogen accumulation for fire/explosion	SC: Primary Tank Leak Detect Syss SC: DST/AWF Ventilation	LCO: DST and AWF Tank Ventilation Syss LCO: Primary Tank Leak Detect Syss AC: Flammability Cntrls AC: Ign Cntrls AC: Flammable Gas Mon Cntrls	None required	None required	Controls based on BIO Appendix E.	S3
I-242A-1-FLW-C	Release of radioactive material from Feed Tank 241-AW-102 due to fire/ explosion caused by igniting hydrogen gas when pump is damaged and possibly becomes an ignition source from dead heading	Plugged line which fails pump and causes ignition source, sufficient hydrogen accumulation for fire/explosion	SC: Primary Tank Leak Detect Syss SC: DST/AWF Ventilation	LCO: DST and AWF Tank Ventilation Syss LCO: Primary Tank Leak Detect Syss AC: Flammability Cntrls AC: Ign Cntrls AC: Flammable Gas Mon Cntrls	None required	None required	Controls based on BIO Appendix E.	S3
I-242A-1-FLW-D	Release of radioactive material from Feed Tank 241-AW-102 due to fire/ explosion caused by igniting hydrogen gas when pump is damaged and possibly becomes an ignition source	Pump plugged which fails pump and causes ignition source, sufficient hydrogen accumulation for fire/explosion	SC: Primary Tank Leak Detect Syss SC: DST/AWF Ventilation	LCO: DST and AWF Tank Ventilation Syss LCO: Primary Tank Leak Detect Syss AC: Flammability Cntrls AC: Ign Cntrls AC: Flammable Gas Mon Cntrls	None required	None required	Controls based on BIO Appendix E.	S3
I-242A-1-FLW-E	Release of radioactive material from Feed Tank 241-AW-102 due to fire/ explosion caused by igniting hydrogen gas when pump is damaged and possibly becomes an ignition source from pump cavitation	Empty feed tank which fails pump and causes ignition source, sufficient hydrogen accumulation for fire/explosion	SC: Primary Tank Leak Detect Syss SC: DST/AWF Ventilation	LCO: DST and AWF Tank Ventilation Syss LCO: Primary Tank Leak Detect Syss AC: Flammability Cntrls AC: Ign Cntrls AC: Flammable Gas Mon Cntrls	None required	None required	Controls based on BIO Appendix E.	S3

Table 5.4-1. Safety Structures, Systems, and Components and Technical Safety Requirements for Potential S3 and S2 Consequences. (107 Sheets)

ID	Hazardous Condition	Cause	Preventive SSCs	Preventive TSRs	Mitigative SSCs	Mitigative TSRs	Memo	Cons
ITK-11	Release of radioactive material from in-tank fire or explosion due to intrusive activity (dome collapse)	Lightning, range fire, or seismic event ignites tank vapors	SC: SY-101 Mixer Pump Cntrls SC: Primary Tank Leak Detect Syss SC: DST/AWF Ventilation	LCO: DST and AWF Tank Ventilation Syss LCO: Primary Tank Leak Detect Syss AC: Flammability Cntrls AC: Ign Cntrls AC: Flammable Gas Mon Cntrls AC: Ign Cntrls (Lightning)	None required	AC: Emergency Prep (Seismic)	Controls based on BIO Appendix E; LA-UR-92-3196; and accident analyses (Natural Phenomena - Lightning; and Natural Phenomena - Seismic).	S3
ITK-FR-13	Release of radioactive aerosols/vapors from flex receiver due to buildup and ignition of flammable gas in receiver	Hydrogen gas buildup in tank/ riser that travels into receiver with ignition source (spark from herculite or equipment)	None required	AC: Ign Cntrls AC: Flammable Gas Mon Cntrls	None required	None required	Controls based on BIO Appendix E.	S2
XS-26-PRES02	Release of radioactive aerosols from Tank 241-SY-102 due to flammable gas fire/explosion (dome collapse)	Accumulation of flammable gases in vapor space and spark source	SC: Primary Tank Leak Detect Syss SC: DST/AWF Ventilation	LCO: DST and AWF Tank Ventilation Syss LCO: Primary Tank Leak Detect Syss AC: Flammability Cntrls AC: Ign Cntrls AC: Flammable Gas Mon Cntrls AC: Ign Cntrls (Lightning)	None required	None required	Controls based on BIO Appendix E; and accident analysis (Natural Phenomena - Lightning).	S3
FLAMMABLE GAS DEFLAGRATIONS - SSIs (Section 5.3.2.14)								
XS-01-FLOW03	Release of liquids, solids and/or vapors from single shell tank due to dome collapse and DCRT pressurization caused by flammable gas fire/ explosion propagating from DCRT to single shell tank	Pipeline connecting single shell tank and DCRT fills with flammable gas; loss of ventilation flow in DCRT so that a flammable gas atmosphere is ignited by the ventilation outlet heater	SC: SST Ventilation SC: DCRT Level Dip Tube Flow	LCO: SST Ventilation Syss LCO: DCRT Ventilation Syss AC: Flammability Cntrls AC: Ign Cntrls AC: Flammable Gas Mon Cntrls	None required	None required	Controls based on BIO Appendix E.	S3

Table 5.4-1. Safety Structures, Systems, and Components and Technical Safety Requirements for Potential S3 and S2 Consequences. (107 Sheets)

ID	Hazardous Condition	Cause	Preventive SSCs	Preventive TSRs	Mitigative SSCs	Mitigative TSRs	Memo	Cons
102AW-01-FLOW 102AW-02-PRES	Release of liquids, solids and/or vapors from Tank 241-AW-102 due to dome collapse caused by chemical reaction of incompatible wastes	Misrouting to destination other than intended creates chemical incompatibility	None required	None required	None required	None required	No controls required based on low accident frequency.	S3
102S-04.e3	Release of radioactive aerosols contained in Tank 241-S-102 vapor space to atmosphere due to generation of excessive heat leading to dome collapse	Addition of incompatible waste/chemical (misroute)	None required	None required	None required	None required	No controls required based on low accident frequency.	S3
106C-01I	Release of radioactive and/or hazardous material from Tank 241-C-106 due to possible dome collapse caused by tank high pressure	Fire in waste tank	SC: SST Ventilation	AC: Flammability Cntrls AC: Ign Cntrls AC: Flammable Gas Mon Cntrls AC: Ign Cntrls (Lightning) LCO: SST Ventilation Syss	None required	None required	Controls based on BIO Appendix E; and accident analysis (Natural Phenomena - Lightning).	S3
106C-01J	Release of radioactive and/or hazardous material from Tank 241-C-106 due to high pressure in tank and possible dome collapse	Fire/explosion in waste tank	SC: SST Ventilation	AC: Flammability Cntrls AC: Ign Cntrls AC: Flammable Gas Mon Cntrls AC: Ign Cntrls (Lightning) LCO: SST Ventilation Syss	None required	None required	Controls based on BIO Appendix E; and accident analysis (Natural Phenomena - Lightning).	S3
106C-01Ma	Release of radioactive and/or hazardous material from Tank 241-C-106 due to flammable gas fire/ explosion in tank caused by high temperature (dome collapse)	Chemical reaction in tank	SC: SST Ventilation	LCO: SST Ventilation Syss AC: Flammability Cntrls AC: Ign Cntrls AC: Flammable Gas Mon Cntrls AC: Trans Cntrls (Mis-routing)	None required	None required	Controls based on BIO Appendix E and accident analysis (Subsurface Leak Resulting in Pool). Auto-ignition temperature of H2 at LFL is 400 C.	S3
106C-02A	Release of radioactive and/or hazardous material from Tank 241-C-106 due to dome collapse caused by ignition of high flammable gas content in tank	High waste temperature	SC: SST Ventilation	LCO: SST Ventilation Syss AC: Flammability Cntrls AC: Ign Cntrls AC: Flammable Gas Mon Cntrls	None required	None required	Controls based on BIO Appendix E. Auto-ignition temperature of H2 at LFL is 400 C.	S3

Table 5.4-1. Safety Structures, Systems, and Components and Technical Safety Requirements for Potential S3 and S2 Consequences. (107 Sheets)

ID	Hazardous Condition	Cause	Preventive SSCs	Preventive TSRs	Mitigative SSCs	Mitigative TSRs	Memo	Cons
106C-02B	Release of radioactive and/or hazardous material from Tank 241-C-106 due to ignition of high flammable gas content in tank and possible dome collapse	Ventilation system failure	None required	AC: Flammability Cntrls AC: Ign Cntrls AC: Flammable Gas Mon Cntrls AC: Ign Cntrls (Lightning)	None required	None required	Controls based on BIO Appendix E; and accident analysis (Natural Phenomena - Lightning).	S3
106C-02C	Release of radioactive and/or hazardous material from Tank 241-C-106 due to dome collapse caused by ignition of high flammable gas content in tank	Tank burp, release of trapped gas	SC: SST Ventilation	LCO: SST Ventilation Syss AC: Flammability Cntrls AC: Ign Cntrls AC: Flammable Gas Mon Cntrls AC: Ign Cntrls (Lightning)	None required	None required	Controls based on BIO Appendix E; and accident analysis (Natural Phenomena - Lightning).	S3
106C-04A	Release of radioactive and/or hazardous material from Tank 241-C-106 due to tank damage caused by flammable gas fire/ explosion because of high flammable gas content in the tank (dome collapse)	High flammable gas content due to chemical reaction in sludge layer	SC: SST Ventilation	LCO: SST Ventilation Syss AC: Flammability Cntrls AC: Ign Cntrls AC: Flammable Gas Mon Cntrls AC: Ign Cntrls (Lightning)	None required	None required	Controls based on BIO Appendix E; and accident analysis (Natural Phenomena - Lightning).	S3
106C-04Aa	Release of radioactive and/or hazardous material from Tank 241-C-106 due to flammable gas content of the waste causing an exothermic reaction in waste tank	High flammable gas content in tank sludge layer due to chemical reaction	SC: SST Ventilation	LCO: SST Ventilation Syss AC: Flammability Cntrls AC: Ign Cntrls AC: Flammable Gas Mon Cntrls AC: Ign Cntrls (Lightning)	None required	None required	Controls based on BIO Appendix E; and accident analysis (Natural Phenomena - Lightning).	S2
106C-04B	Release of radioactive and/or hazardous material from Tank 241-C-106 due to fire/explosion caused by ignition of flammable gas released from radiolysis in tank sludge	Radiolysis in sludge layer allows release of trapped gas to vapor space	SC: SST Ventilation	LCO: SST Ventilation Syss AC: Flammability Cntrls AC: Ign Cntrls AC: Flammable Gas Mon Cntrls AC: Ign Cntrls (Lightning)	None required	None required	Controls based on BIO Appendix E; and accident analysis (Natural Phenomena - Lightning).	S3

Table 5.4-1. Safety Structures, Systems, and Components and Technical Safety Requirements for Potential S3 and S2 Consequences. (107 Sheets)

ID	Hazardous Condition	Cause	Preventive SSCs	Preventive TSRs	Mitigative SSCs	Mitigative TSRs	Memo	Cons
106C-13A	Release of radioactive and/or hazardous material from Tank 241-C-106 due to possible dome collapse, tank damage caused by high temperature	Fire in Tank 241-C-105 propagates into Tank 241-C-106	SC: SST Ventilation	LCO: SST Ventilation Syss AC: Flammability Cntrls AC: Ign Cntrls AC: Flammable Gas Mon Cntrls AC: Ign Cntrls (Lightning)	None required	None required	Controls based on BIO Appendix E and accident analysis (Natural Phenomena - Lightning).	S3
114SX-04.b.3b	Release of radioactive aerosols from head space of Tank 241-SX-114 to atmosphere through exhaust HEPA filter due to flammable gas ignition in the headspace (dome collapse)	Flammable gas fire/explosion in Tank 241-SX-114 (Note: Tank 241-SX-114 is NOT currently identified as a Flammable Gas Watch List Tank) Requires spark to be present	SC: SST Ventilation	LCO: SST Ventilation Syss AC: Flammability Cntrls AC: Ign Cntrls AC: Flammable Gas Mon Cntrls AC: Ign Cntrls (Lightning)	None required	None required	Controls based on BIO Appendix E; and accident analysis (Natural Phenomena - Lightning).	S3
114SX-05.b.1	Release of radioactive aerosols from Tank 241-SX-114 waste to atmosphere due to flammable gas ignition resulting in dome collapse	Radiolysis creating bubbles of gases in waste	SC: SST Ventilation	LCO: SST Ventilation Syss AC: Flammability Cntrls AC: Ign Cntrls AC: Flammable Gas Mon Cntrls AC: Ign Cntrls (Lightning)	None required	None required	Controls based on BIO Appendix E; and accident analysis (Natural Phenomena - Lightning).	S3
114SX-05.d	Release of radioactive aerosols from Tank 241-SX-114 head space to atmosphere due to localized fire/explosion of flammable gas	Core Sampling through a pocket of gas large enough to exceed local LFL with ignition source (spark) creates local fire/explosion	SC: SST Ventilation	LCO: SST Ventilation Syss AC: Flammability Cntrls AC: Ign Cntrls AC: Flammable Gas Mon Cntrls AC: Ign Cntrls (Lightning)	None required	None required	Controls based on BIO Appendix E; and accident analysis (Natural Phenomena - Lightning).	S2
114SX-06.a.1b	Release of radioactive aerosols from Tank 241-SX-114 waste to atmosphere as a result of a dome collapse	Deflagration of H2 (Implies gas generation with spark)	SC: SST Ventilation	LCO: SST Ventilation Syss AC: Flammability Cntrls AC: Ign Cntrls AC: Flammable Gas Mon Cntrls AC: Ign Cntrls (Lightning)	None required	None required	Controls based on BIO Appendix E; and accident analysis (Natural Phenomena - Lightning).	S3

Table 5.4-1. Safety Structures, Systems, and Components and Technical Safety Requirements for Potential S3 and S2 Consequences. (107 Sheets)

ID	Hazardous Condition	Cause	Preventive SSCs	Preventive TSRs	Mitigative SSCs	Mitigative TSRs	Memo	Cons
244AR-01.c.09	Release of radioactive aerosols from vessel headspace into canyon atmosphere due to flammable gas ignition	Ignition of flammable gas that has collected in piping and tank dome	SC: 244-AR TK-002 Level (Ventilation)	LCO: 244-AR TK-002 Ventilation Sys AC: Ign Cntrls AC: Flammable Gas Mon Cntrls	None required	None required	Controls based on BIO Appendix E.	S2
244AR-02.a.03	Release of radioactive liquid in the form of aerosols contained in a cell to the exterior of the 244-AR facility due to ignition of flammable gas	Fire/explosion from hydrogen buildup	SC: 244-AR TK-002 Level (Ventilation)	LCO: 244-AR TK-002 Ventilation Sys AC: Ign Cntrls AC: Flammable Gas Mon Cntrls	None required	None required	Controls based on BIO Appendix E.	S2
244AR-03.a.04	Release of radioactive aerosols into cell due to ignition of flammable gas in 244-AR Vault tank headspace	Fire/explosion due to ignition of accumulated flammable gas	SC: 244-AR TK-002 Level (Ventilation)	LCO: 244-AR TK-002 Ventilation Sys AC: Ign Cntrls AC: Flammable Gas Mon Cntrls	None required	None required	Controls based on BIO Appendix E.	S2
BND-02	Release of radioactive aerosols from tank due to ignition of combustibles during preparation for bonding	Drilling holes for bonding attachments causes sparks when flammable gases or materials are present	SC: SST Ventilation	LCO: SST Ventilation Syss AC: Flammability Cntrls AC: Ign Cntrls AC: Flammable Gas Mon Cntrls	None required	None required	Controls based on BIO Appendix E.	S2
CP-MSP-05	Release of radioactive or toxic material to atmosphere from waste tank due to flammable gas deflagration	Human error AND Flammable gas is present in tank AND Mechanical failure of the pipe and probe (ignition source)	SC: SST Ventilation SC: DCRT Level Dip Tube Flow SC: TK-002 244-AR Level Dip Tube Flow	LCO: SST Ventilation Syss - Active LCO: SST Ventilation Syss - Passive LCO: DCRT Ventilation Syss LCO: 244-AR TK-002 Ventilation Sys AC: Flammable Gas Mon Cntrls AC: Excavation Cntrls	None required	None required	Controls based on BIO Appendix E and accident analysis (Spray Leak from Underground Waste Transfer Line).	S3

Table 5.4-1. Safety Structures, Systems, and Components and Technical Safety Requirements for Potential S3 and S2 Consequences. (107 Sheets)

ID	Hazardous Condition	Cause	Preventive SSCs	Preventive TSRs	Mitigative SSCs	Mitigative TSRs	Memo	Cons
CP-MSP-06	Release of radioactive or toxic material to atmosphere due to flammable gas deflagration caused by puncture and ignition of flammable gas in transfer line which propagates to the waste tank	Human error AND Flammable gas is present in transfer pipe AND Spark from probe tip (ignition source)	SC: SST Ventilation SC: DCRT Level Dip Tube Flow SC: TK-002 244-AR Level Dip Tube Flow	LCO: SST Ventilation Syss - Active LCO: SST Ventilation Syss - Passive LCO: DCRT Ventilation Syss LCO: 244-AR TK-002 Ventilation Sys AC: Flammable Gas Mon Cntrls AC: Excavation Cntrls	None required	None required	Controls based on BIO Appendix E and accident analysis (Spray Leak from Underground Waste Transfer Line).	S3
CP-MSP-08	Release of radioactive or toxic material to atmosphere from MISF Miscellaneous Inactive Storage Facilities due to flammable gas deflagration	Human error AND Mechanical failure of probe	None required	AC: Excavation Cntrls	None required	AC: Emergency Prep (Response)	Controls based on accident analysis (Spray Leak From Transfer Lines and In-Tank Fuel Fire/Deflagration)	S2
ITK-08	Release of radioactive material from in-tank fire or explosion due to intrusive activity (dome collapse)	Exothermic reaction of incompatible materials in tank	SC: SST Ventilation SC: DCRT Level Dip Tube Flow SC: 244-AR TK-002 Level (Ventilation)	LCO: SST Ventilation Syss LCO: DCRT Ventilation Syss AC: Ign Cntrls AC: Flammable Gas Mon Cntrls LCO: 204-AR TK-002 Ventilation Sys	None required	None required	Controls based on BIO Appendix E. Auto-Ign temperature of H2 at LFL is 400 C.	S3
ITK-08-1	Release of radioactive or toxic material from facility due to in-facility fire or explosion during intrusive activity	Exothermic reaction of incompatible materials in facility	None required	AC: Ign Cntrls AC: Flammable Gas Mon Cntrls	None required	None required	Controls based on BIO Appendix E. Auto-Ign temperature of H2 at LFL is 400 C.	S2
ITK-09	Release of radioactive material from in-tank fire or explosion due to intrusive activity (dome collapse)	Failure to bond components or incorrect bonding	SC: SST Ventilation SC: DCRT Level Dip Tube Flow SC: 244-AR TK-002 Level (Ventilation)	LCO: SST Ventilation Syss LCO: DCRT Ventilation Syss LCO: 244-AR TK-002 Ventil Sys AC: Ign Cntrls AC: Flammable Gas Mon Cntrls	None required	None required	Controls based on BIO Appendix E.	S3

Table 5.4-1. Safety Structures, Systems, and Components and Technical Safety Requirements for Potential S3 and S2 Consequences. (107 Sheets)

ID	Hazardous Condition	Cause	Preventive SSCs	Preventive TSRs	Mitigative SSCs	Mitigative TSRs	Memo	Cons
ITK-09-I	Release of radioactive or toxic material from facility due to in-facility fire or explosion during intrusive activity	Failure to bond components or incorrect bonding	None required	AC: Ign Cntrls AC: Flammable Gas Mon Cntrls	None required	None required	Controls based on BIO Appendix E.	S2
ITK-10-I	Release of radioactive or toxic material from facility due to in-facility fire or explosion during intrusive activity	Spark from equipment or tools provide an ignition source	None required	AC: Ign Cntrls AC: Flammable Gas Mon Cntrls	None required	None required	Controls based on BIO Appendix E.	S2
ITK-10-a	Release of radioactive material from in-tank fire or explosion due to intrusive activity (dome collapse)	Spark from equipment or tools	SC: SST Ventilation SC: DCRT Level Dip Tube Flow SC: 244-AR TK-002 Level (Ventilation)	LCO: SST Ventilation Syss LCO: DCRT Ventilation Syss LCO: 244-AR TK-002 Ventil Sys AC: Ign Cntrls AC: Flammable Gas Mon Cntrls	None required	None required	Controls based on BIO Appendix E.	S3
LDUA 1-25	Release of aerosolized waste to the atmosphere from headspace of single shell tank due to ignition of flammable gas	Fire (electrical, lighting)	SC: SST Ventilation	LCO: SST Ventilation Syss - Active LCO: SST Ventilation Syss - Passive AC: Ign Cntrls AC: Flammable Gas Mon Cntrls	None required	None required	Controls based on BIO Appendix E.	S3
LDUA 1-32	Release of aerosolized waste to the atmosphere from headspace of single shell tank due to ignition of flammable gas	During planned intrusive activities, sampling triggers GRE	SC: SST Ventilation	LCO: SST Ventilation Syss - Active LCO: SST Ventilation Syss - Passive AC: Ign Cntrls AC: Flammable Gas Mon Cntrls	None required	None required	Controls based on BIO Appendix E.	S3
LDUA 1-33	Release of aerosolized waste to the atmosphere from headspace of single shell tank due to ignition of flammable gas	Non-arm end effectors (OVS, OSVS) dropped down riser	SC: SST Ventilation	LCO: SST Ventilation Syss - Active LCO: SST Ventilation Syss - Passive AC: Flammable Gas Mon Cntrls	None required	None required	Controls based on BIO Appendix E.	S3

Table 5.4-1. Safety Structures, Systems, and Components and Technical Safety Requirements for Potential S3 and S2 Consequences. (107 Sheets)

ID	Hazardous Condition	Cause	Preventive SSCs	Preventive TSRs	Mitigative SSCs	Mitigative TSRs	Memo	Cons
LDUA 2-20	Release of aerosolized waste to the atmosphere from headspace of single shell tank due to ignition of flammable gas	Combustible source of gas located near the compressor intake.	SC: SST Ventilation	LCO: SST Ventilation Syss - Active LCO: SST Ventilation Syss - Passive AC: Ign Cntrls AC: Flammable Gas Mon Cntrls	None required	None required	Controls based on BIO Appendix E.	S3
LDUA 2-51	Release of aerosolized waste to the atmosphere from headspace of single shell tank due to ignition of flammable gas	Supervisor error - arm in wrong mode, Electric remains on after air purge fault, flammable gas enters arm, spark ignites gas	SC: SST Ventilation	LCO: SST Ventilation Syss - Active LCO: SST Ventilation Syss - Passive AC: Flammable Gas Mon Cntrls	None required	None required	Controls based on BIO Appendix E.	S3
LDUA 5-45	Release of aerosolized waste to the atmosphere from headspace of single shell tank due to ignition of flammable gas	Helicopter/airplane crash	None required	None required	None required	None required	No controls required based on low frequency of aircraft event.	S3
LDUA 6-24	Release of aerosolized waste to the atmosphere from headspace of single shell tank due to ignition of flammable gas	Wrong setting on safety interlock for electric shutdown on loss of purge air	SC: SST Ventilation	LCO: SST Ventilation Syss - Active LCO: SST Ventilation Syss - Passive AC: Flammable Gas Mon Cntrls	None required	None required	Controls based on BIO Appendix E.	S3
LDUA/EREE 1-22	Release of aerosolized waste to the atmosphere from headspace of single shell tank due to ignition of flammable gas	Electrical Short in LDUA Lighting short	SC: SST Ventilation	LCO: SST Ventilation Syss - Active LCO: SST Ventilation Syss - Passive AC: Ign Cntrls AC: Flammable Gas Mon Cntrls	None required	None required	Controls based on BIO Appendix E.	S3

Table 5.4-1. Safety Structures, Systems, and Components and Technical Safety Requirements for Potential S3 and S2 Consequences. (107 Sheets)

ID	Hazardous Condition	Cause	Preventive SSCs	Preventive TSRs	Mitigative SSCs	Mitigative TSRs	Memo	Cons
LDUA/EREE 1-28	Release of aerosolized waste to the atmosphere from headspace of single shell tank due to ignition of flammable gas	Electrical Short in LDUA/EREE Lighting short	SC: SST Ventilation	LCO: SST Ventilation Syss - Active LCO: SST Ventilation Syss - Passive AC: Ign Cntrls AC: Flammable Gas Mon Cntrls	None required	None required	Controls based on BIO Appendix E.	S3
NP-15	Radioactive and hazardous material release from isolated or abandoned equipment due to fire	Hydrogen producing chemical reactions in isolated or abandoned equipment	None required	AC: Ign Cntrls AC: Flammable Gas Mon Cntrls	None required	None required	Controls based on BIO Appendix E. Natural Phenomena induced events are considered low frequency.	S2
RSR-06-1	Release of radioactive or toxic material from facility due to in-facility fire or explosion during riser removal activity	Failure to bond components or incorrect bonding allows electrostatic spark	None required	AC: Ign Cntrls AC: Flammable Gas Mon Cntrls	None required	None required	Controls based on BIO Appendix E.	S2
XS-01-FLOW01	Release of radioactive aerosols from 244 TX DCRT due to ignition of flammable gas atmosphere	Pressure drop in transfer line releases flammable gas into DCRT atmosphere and ignition source causes deflagration	SC: DCRT Level Dip Tube Flow	LCO: DCRT Ventilation Sys AC: Ign Cntrls AC: Flammable Gas Mon Cntrls	None required	None required	Controls based on BIO Appendix E for DCRTs.	S2
XS-01-FLOW02	Release of liquids, solids and/or vapors from single shell tank due to dome collapse caused by flammable gas burn	Loss of pump prime results in overheated pump that ignites flammable gas	SC: SST Ventilation	LCO: SST Ventilation Syss AC: Flammability Cntrls AC: Ign Cntrls AC: Flammable Gas Mon Cntrls	None required	None required	Controls based on BIO Appendix E.	S3
XS-03-LEVE01 XS-21-LEVE (244-S DCRT)	Release of combustion products from 244 TX DCRT due to flammable gas burn in tank atmosphere	Evaporation of DCRT contents causing decreased ability of waste to retain flammable gases and spark source	SC: DCRT Level Dip Tube Flow	LCO: DCRT Ventilation Syss AC: Ign Cntrls AC: Flammable Gas Mon Cntrls	None required	None required	Controls based on BIO Appendix E.	S2
XS-03-PRES01 XS-21-PRES (244-S DCRT)	Release of liquid aerosols from 244 TX-DCRT due to flammable gas burn in tank atmosphere	Loss of ventilation flow with accumulation of flammable gas and spark source	SC: DCRT Level Dip Tube Flow	LCO: DCRT Ventilation Syss AC: Ign Cntrls AC: Flammable Gas Mon Cntrls	None required	None required	Controls based on BIO Appendix E.	S2

Table 5.4-1. Safety Structures, Systems, and Components and Technical Safety Requirements for Potential S3 and S2 Consequences. (107 Sheets)

ID	Hazardous Condition	Cause	Preventive SSCs	Preventive TSRs	Mitigative SSCs	Mitigative TSRs	Memo	Cons
XS-03-TEMP03 XS-21-TEMP (244-S-DCRT)	Release of liquid aerosols from 244 TX DCRT due to flammable gas burn-fire/explosion in tank atmosphere	Buildup of gases, loss of ventilation, and spark source	SC: DCRT Level Dip Tube Flow	LCO: DCRT Ventilation Syss AC: Ign Cntrls AC: Flammable Gas Mon Cntrls	None required	None required	Controls based on BIO Appendix E.	S2
XS-13-PRES02	Release of radioactive aerosols from 241-U-301B catch tank due to fire/ explosion of flammable gas	Buildup of flammable gas in catch tank and spark source	None required	AC: Ign Cntrls AC: Flammable Gas Mon Cntrls	None required	None required	Controls based on BIO Appendix E.	S3
XS-41B-LEVE01	Release of radioactive aerosols from vent station catch tank due to flammable gas fire/ explosion in nozzle pit	Failure to empty catch tank with buildup of flammable gas in nozzle pit plus ignition source	None required	AC: Ign Cntrls AC: Flammable Gas Mon Cntrls	None required	None required	Controls based on BIO Appendix E.	S2
XS-41C-LEVE01	Release of radioactive aerosols from vent station catch tank due to flammable gas fire/ explosion in catch tank pit	Leak of catch tank with buildup of flammable gas in catch tank pit plus ignition source	None required	AC: Ign Cntrls AC: Flammable Gas Mon Cntrls	None required	None required	Controls based on BIO Appendix E.	S2
ORGANIC SOLVENT FIRE (Section 5.3.2.15)								
1-222S-1-CMP-E	Release of radioactive aerosols to the atmosphere from 244-S or receiver tank due to over pressurization of tank caused by organic fire	Human error - upset of 222-S Lab operations	None required	AC: Ign Cntrls (Organic Solvent) AC: Trans Cntrls (Organic Solvent)	None required	AC: HEPA Filter Cntrl (Source Term) AC: Emergency Prep Program (Organic Solvent)	Controls based on accident analysis (Organic Solvent Fire).	S3
102AW-09-COMP01	Release of combustion product aerosols from Tank 241-AW-102 due to fire in separable organic layer in waste tank causing dome collapse	Organic reaching flash point or being aerosolized plus ignition source	None required	AC: Ign Cntrls (Organic Solvent) AC: Trans Cntrls (Organic Solvent)	None required	AC: HEPA Filter Cntrl (Source Term) AC: Emergency Prep Program (Organic Solvent)	Controls based on accident analysis (Organic Solvent Fire).	S3

Table 5.4-1. Safety Structures, Systems, and Components and Technical Safety Requirements for Potential S3 and S2 Consequences. (107 Sheets)

ID	Hazardous Condition	Cause	Preventive SSCs	Preventive TSRs	Mitigative SSCs	Mitigative TSRs	Memo	Cons
I-242A-4-TMP-A	Release of radioactive material from Tank 241-AW-102 caused by ignition of organics in Tank C-100 which pressurizes the drain line and propagates the fire down the line to Feed Tank 241-AW-102	Faulty control of vacuum to CA-1 vessel causing pot to boil with organic layer available	None required	None required	None required	None required	No controls required based on low accident frequency.	S3
I-BPLANT-1-CMP-E	Release of tank waste due to fire in receiver tank from transferring organics from B Plant	Human error - tank containing organics in B Plant rupture and spills organics to the drains which eventually end up in Tank 24-1 and an inadvertent transfer to tank farms	None required	AC: Ign Cntrls (Organic Solvent) AC: Trans Cntrls (Organic Solvent)	None required	AC: HEPA Filter Cntrl (Source Term) AC: Emergency Prep Program (Organic Solvent)	Controls based on accident analysis (Organic Solvent Fire).	S3
I-PFP-1-CMP-E	Release of high level waste from receiver tank due to fire from organics transferred from PFP	Excess organic material added to waste results in fire	None required	AC: Ign Cntrls (Organic Solvent) AC: Trans Cntrls (Organic Solvent)	None required	AC: HEPA Filter Cntrl (Source Term) AC: Emergency Prep Program (Organic Solvent)	Controls based on accident analysis (Organic Solvent Fire).	S3
IN-TANK FUEL FIRE/DEFLAGRATION (Section 5.3.2.16)								
EE-05-a	Release of radioactive or hazardous materials from SST tank due to external fires	Run-away vehicle or truck shears off one or more risers, ruptures gasoline tank	None required	AC: Ign Cntrls (Vehicle)	None required	AC: Emergency Prep (In-tank Fuel Fire)	Controls based on accident analysis (In-Tank Fuel Fire/ Deflagration).	S3
EE-05-b	Release of radioactive or hazardous materials from DST tank due to external fires	Run-away vehicle or truck shears off one or more risers, ruptures gasoline tank	None required	AC: Ign Cntrls (Vehicle)	None required	AC: Emergency Prep (In-tank Fuel Fire)	Controls based on accident analysis (In-Tank Fuel Fire/ Deflagration).	S3
102AW-03-TEMP01	Release of liquids, solids and/or vapors from Tank 241-AW-102 due to dome collapse caused by an fire/explosion in the annulus	Fire/Explosion of flammable liquid spilled into annulus via a riser	None required	AC: Ign Cntrls (Vehicles)	None required	AC: Emergency Prep (In-tank Fuel Fire)	Controls based on accident analysis (In-Tank Fuel Fire/ Deflagration).	S3

Table 5.4-1. Safety Structures, Systems, and Components and Technical Safety Requirements for Potential S3 and S2 Consequences. (107 Sheets)

ID	Hazardous Condition	Cause	Preventive SSCs	Preventive TSRs	Mitigative SSCs	Mitigative TSRs	Memo	Cons
102AW-03-TEMP02	Release of radioactive aerosols from Tank 241-AW-102 due to fire/ explosion in annulus damaging primary tank	Flammable concentration of gases in annulus vapor space due to spill of fuel into annulus and spark source	None required	AC: Ign Cntrls (Vehicles)	None required	AC: Emergency Prep (In-tank Fuel Fire)	Controls based on accident analysis (In-Tank Fuel Fire/ Deflagration).	S2
102AW-09-COMP02	Release of radioactive waste aerosols from Tank 241-AW-102 due to fire in fuel spilled in waste tank causing dome collapse	Spill of fuel from external source plus fuel reaching flash point or being aerosolized plus ignition source	None required	AC: Ign Cntrls (Vehicles)	None required	AC: Emergency Prep (In-tank Fuel Fire)	Controls based on accident analysis (In-Tank Fuel Fire/ Deflagration).	S3
102S-03.b3	Release of radioactive aerosols to atmosphere from Tank 241-S-102 due to burning fuel flowing into waste tank due to ignition of fuel from ruptured gas tank.	Vehicle drives into open riser puncturing gas tank + Ignition	None required	AC: Ign Cntrls (Vehicles)	None required	AC: Emergency Prep (In-tank Fuel Fire)	Controls based on accident analysis (In-Tank Fuel Fire/ Deflagration).	S2
102S-03.b4	Release of radioactive aerosols to atmosphere from Tank 241-S-102 due to burning fuel flowing into waste tank causing dome collapse	Vehicle drives into open riser puncturing gas tank + Ignition + Flammable organic vapors in tank	None required	AC: Ign Cntrls (Vehicles)	None required	AC: Emergency Prep (In-tank Fuel Fire)	Controls based on accident analysis (In-Tank Fuel Fire/ Deflagration).	S3
EE-04-a	Release of radioactive and hazardous materials from SST tank due to external fires	Vehicle accident involving propane, diesel or gasoline delivery	None required	AC: Ign Cntrls (Speed Limits)	None required	AC: Emergency Prep (In-tank Fuel Fire)	Controls based on accident analysis (In-Tank Fuel Fire/ Deflagration).	S3
EE-04-b	Release of radioactive and hazardous materials from DST tank due to external fires	Vehicle accident involving propane, diesel or gasoline delivery	None required	AC: Ign Cntrls (Speed Limits)	None required	AC: Emergency Prep (In-tank Fuel Fire)	Controls based on accident analysis (In-Tank Fuel Fire/ Deflagration).	S3
LDUA 2-2	Release of aerosolized waste to the atmosphere from headspace of single shell tank due to ignition of hydraulic fluid	Structural failure of hydraulic system	None required	AC: Ign Cntrls	None required	AC: Emergency Prep	Controls based on BIO Appendix E.	S3

Table 5.4-1. Safety Structures, Systems, and Components and Technical Safety Requirements for Potential S3 and S2 Consequences. (107 Sheets)

ID	Hazardous Condition	Cause	Preventive SSCs	Preventive TSRs	Mitigative SSCs	Mitigative TSRs	Memo	Cons
VEH-07-I	Release of radioactive or toxic material from MISF due to riser being sheared off and possibly vehicle gas tank ruptured and fire	Vehicle moving near facility risers	None required	AC: Ign Cntrls (Vehicles)	None required	AC: Emergency Prep (In-Tank Fuel Fire/ Deflagration)	Controls based on accident analysis (In-Tank Fuel Fire/ Deflagration).	S2
ORGANIC SALT-NITRATE REACTION (Section 5.3.2.17)								
RSR-07-I	Release of radioactive or toxic material from facility due to in-facility fire or explosion during riser removal activity (chosen to represent all organic nitrate tanks)	Spark from failure to use non-sparking tools or sparks from welding, cutting, grinding, etc.	SS: Temperature Mon Sys	LCO: SST Waste Temperature Cntrls LCD: DST and AWF Tank Waste Temperature Cntrls AC: Ign Cntrls (Organic Salt-Nitrate) AC: Moisture Cntrls AC: Process Instrumentation and Measuring and Test Equipment	None required	AC: HEPA Filter Cntrl Program (Source Term) AC: Emergency Prep Program (Organic Salt-Nitrate)	Controls based on accident analysis (Organic Salt-Nitrate Reaction).	S2

Table 5.4-1. Safety Structures, Systems, and Components and Technical Safety Requirements for Potential S3 and S2 Consequences. (107 Sheets)

ID	Hazardous Condition	Cause	Preventive SSCs	Preventive TSRs	Mitigative SSCs	Mitigative TSRs	Memo	Cons
SURFACE LEAK RESULTING IN POOL (Section 5.3.2.10)								
W058-PRES01	Release of radioactive slurry to the soil surface from overflow in the SY-A or SY-B valve pit due to piping system leak (pool)	Water hammer plus mitigative features failure	SC: Trans Leak Detect Syss SS: Tank Level Detect Syss SS: Salt Well Flow Totalizer	LCO: Trans Leak Detect Syss AC: Trans Cntrls (Leak Prevention/ Detect/Cntrl)	SC: Trans Leak Detect Syss SS: Tank Level Detect Syss SS: Salt Well Flow Totalizer SC: Trans Sys Cvrs SC: Trans Sys Supplemental Cvrs	LCO: Trans Sys Cvrs LCO: Trans Leak Detect Syss AC: Trans Cntrls (Leak Detect/Cntrl) AC: Emergency Prep (Significant Release) AC: Trans Pump Admin Lock Cntrls AC: Trans Sys Cvr Removal Cntrls JCO: Supplemental Cvrs	Controls based on accident analysis (Surface Leak Resulting in Pool).	S2
102AW-01-FLOW10	Release of liquid radioactive waste from Tank 241-AW-102 due to overflow	Misrouting of waste from reverse flow caused by the combination of an incorrectly wired pump and a full transfer pipe	SC: Trans Leak Detect Syss SS: Tank Level Detect Syss	LCO: Trans Leak Detect Syss AC: Trans Cntrls (Leak Prevention/ Detect/Cntrl)	SC: Trans Leak Detect Syss SS: Tank Level Detect Syss SC: Trans Sys Cvrs	LCO: Trans Sys Cvrs LCO: Trans Leak Detect Syss AC: Trans Cntrls (Leak Detect/Cntrl) AC: Emergency Prep (Significant Release) AC: Trans Pump Admin Lock Cntrls AC: Trans Sys Cvr Removal Cntrls	Controls based on accident analysis (Surface Leak Resulting in Pool).	S2

Table 5.4-1. Safety Structures, Systems, and Components and Technical Safety Requirements for Potential S3 and S2 Consequences. (107 Sheets)

ID	Hazardous Condition	Cause	Preventive SSCs	Preventive TSRs	Mitigative SSCs	Mitigative TSRs	Memo	Cons
102AW-01-FLOW11	Release of liquid radioactive waste to the ground surface from Tank 241-AW-102 due to overflow of Tank 241-AW-102 or underground structure	Misrouting to destination other than intended causes overflow	SC: Trans Leak Detect Syss SC: Primary Tank Leak Detect Syss SC: Pressure Switch Interlocks or Alarms (Water Service Lines) SS: Tank Level Detect Syss SS: Salt Well Flow Totalizer	LCO: Service Water Pressure Detect Syss LCO: Primary Tank Leak Detect Syss AC: Trans Cntrls (Leak Prevention/ Detect/Cntrl)	SC: Trans Leak Detect Syss SC: Primary Tank Leak Detect Syss SS: Tank Level Detect Syss SS: Salt Well Flow Totalizer SC: Trans Sys Cvrs	LCO: Trans Sys Cvrs LCO: Trans Leak Detect Syss LCO: Primary Tank Leak Detect Syss AC: Trans Cntrls (Leak Detect/Cntrl) AC: Emergency Prep (Significant Release) AC: Trans Pump Admin Lock Cntrls AC: Trans Sys Cvr Removal Cntrls	Controls based on accident analysis (Surface Leak Resulting in Pool).	S2
102AW-01-TEMP01	Release of liquid radioactive waste from transfer pipe to Tank 241-AW-102 due to leaks overflowing from underground structure	Piping leak due to corrosion caused by transferring high temperature waste	SC: Trans Leak Detect Syss SS: Tank Level Detect Syss	LCO: Trans Leak Detect Syss AC: Trans Cntrls (Leak Prevention/ Detect/Cntrl)	SC: Trans Leak Detect Syss SS: Tank Level Detect Syss SC: Trans Sys Cvrs	LCO: Trans Sys Cvrs LCO: Trans Leak Detect Syss AC: Trans Cntrls (Leak Detect/Cntrl) AC: Emergency Prep (Significant Release) AC: Trans Pump Admin Lock Cntrls AC: Trans Sys Cvr Removal Cntrls	Controls based on accident analysis (Surface Leak Resulting in Pool).	S2

Table 5.4-1. Safety Structures, Systems, and Components and Technical Safety Requirements for Potential S3 and S2 Consequences. (107 Sheets)

ID	Hazardous Condition	Cause	Preventive SSCs	Preventive TSRs	Mitigative SSCs	Mitigative TSRs	Memo	Cons
102AW-01-TEMP01A	Release of liquid waste from transfer pipe to Tank 241-AW-102 due to leaks overflowing from underground structure	Piping leak due to thermal stress of transferring hot solution in cold pipe	SC: Trans Leak Detect Syss SS: Tank Level Detect Syss	LCO: Trans Leak Detect Syss AC: Trans Cntrls (Leak Prevention/ Detect/Cntrl)	SC: Trans Leak Detect Syss SS: Tank Level Detect Syss SC: Trans Sys Cvrs	LCO: Trans Sys Cvrs LCO: Trans Leak Detect Syss AC: Trans Cntrls (Leak Detect/Cntrl) AC: Emergency Prep (Significant Release) AC: Trans Pump Admin Lock Cntrls AC: Trans Sys Cvr Removal Cntrls	Controls based on accident analysis (Surface Leak Resulting in Pool).	S2
102AW-01-TEMP02	Release of liquid radioactive waste from transfer pipe to Tank 241-AW-102 due to leaks overflowing from underground structure	Piping leak due to exceeding the design temperature of the pipe by transferring high temperature waste	SC: Trans Leak Detect Syss SS: Tank Level Detect Syss	LCO: Trans Leak Detect Syss AC: Trans Cntrls (Leak Prevention/ Detect/Cntrl)	SC: Trans Leak Detect Syss SS: Tank Level Detect Syss SC: Trans Sys Cvrs	LCO: Trans Sys Cvrs LCO: Trans Leak Detect Syss AC: Trans Cntrls (Leak Detect/Cntrl) AC: Emergency Prep (Significant Release) AC: Trans Pump Admin Lock Cntrls AC: Trans Sys Cvr Removal Cntrls	Controls based on accident analysis (Surface Leak Resulting in Pool).	S2

Table 5.4-1. Safety Structures, Systems, and Components and Technical Safety Requirements for Potential S3 and S2 Consequences. (107 Sheets)

ID	Hazardous Condition	Cause	Preventive SSCs	Preventive TSRs	Mitigative SSCs	Mitigative TSRs	Memo	Cons
102AW-02-LEVE03	Release of radioactive liquid from Tank 241-AW-102 due to overfilling	Failure to stop transfer causes overfilling of tank	SC: Trans Leak Detect Syss SC: Primary Tank Leak Detect Syss SS: Tank Level Detect Syss	LCO: Primary Tank Leak Detect Syss AC: Trans Cntrls (Leak Prevention/ Detect/Cntrl)	SC: Trans Leak Detect Syss SC: Primary Tank Leak Detect Syss SS: Tank Level Detect Syss SC: Trans Sys Cvrs	LCO: Trans Sys Cvrs LCO: Trans Leak Detect Syss LCO: Primary Tank Leak Detect Syss AC: Trans Cntrls (Leak Detect/Cntrl) AC: Emergency Prep (Significant Release) AC: Trans Pump Admin Lock Cntrls AC: Trans Sys Cvr Removal Cntrls	Controls based on accident analysis (Surface Leak Resulting in Pool).	S2
102AW-02-LEVE04	Release of radioactive liquid from Tank 241-AW-102 due to overfilling	Misrouting causes overfilling of tank	SC: Trans Leak Detect Syss SC: Primary Tank Leak Detect Syss SC: Pressure Switch Interlocks or Alarms (Water Service Lines) SS: Tank Level Detect Syss SS: Salt Well Flow Totalizer	LCO: Service Water Pressure Detect Syss LCO: Primary Tank Leak Detect Syss AC: Trans Cntrls (Leak Prevention/ Detect/Cntrl)	SC: Trans Leak Detect Syss SC: Primary Tank Leak Detect Syss SS: Tank Level Detect Syss SS: Salt Well Flow Totalizer SC: Trans Sys Cvrs	LCO: Trans Sys Cvrs LCO: Trans Leak Detect Syss LCO: Primary Tank Leak Detect Syss AC: Trans Cntrls (Leak Detect/Cntrl) AC: Emergency Prep (Significant Release) AC: Trans Pump Admin Lock Cntrls AC: Trans Sys Cvr Removal Cntrls	Controls based on accident analysis (Surface Leak Resulting in Pool).	S2

Table 5.4-1. Safety Structures, Systems, and Components and Technical Safety Requirements for Potential S3 and S2 Consequences. (107 Sheets)

ID	Hazardous Condition	Cause	Preventive SSCs	Preventive TSRs	Mitigative SSCs	Mitigative TSRs	Memo	Cons
102AW-02-LEVE05	Release of radioactive liquid from Tank 241-AW-102 to the soil column due to gross overfilling of tank (Pool)	Misrouting causes overfilling of tank	SC: Trans Leak Detect Syss SC: Primary Tank Leak Detect Syss SC: Pressure Switch Interlocks or Alarms (Water Service Lines) SS: Tank Level Detect Syss SS: Salt Well Flow Totalizer	LCO: Service Water Pressure Detect Syss LCO: Primary Tank Leak Detect Syss AC: Trans Cntrls (Leak Prevention/ Detect/Cntrl)	SC: Trans Leak Detect Syss SC: Primary Tank Leak Detect Syss SS: Tank Level Detect Syss SS: Salt Well Flow Totalizer SC: Trans Sys Cvrs	LCO: Trans Sys Cvrs LCO: Trans Leak Detect Syss LCO: Primary Tank Leak Detect Syss AC: Trans Cntrls (Leak Detect/Cntrl) AC: Emergency Prep (Significant Release) AC: Trans Pump Admin Lock Cntrls AC: Trans Sys Cvr Removal Cntrls	Controls based on accident analysis (Surface Leak Resulting in Pool).	S2
102AW-13-FLOW02	Release of radioactive liquid from transfer piping out of Tank 241-AW-102 due to backflow of radioactive material into flush pit and subsequent overflow (Pool)	Multiple valving errors and failure of backflow prevention devices dumps to pit as designed	SC: Trans Leak Detect Syss SC: Primary Tank Leak Detect Syss SC: Pressure Switch Interlocks or Alarms (Water Service Lines) SS: Tank Level Detect Syss	LCO: Service Water Pressure Detect Syss LCO: Primary Tank Leak Detect Syss AC: Trans Cntrls (Leak Prevention/ Detect/Cntrl)	SC: Trans Leak Detect Syss SC: Primary Tank Leak Detect Syss SS: Tank Level Detect Syss SC: Trans Sys Cvrs SC: Trans Sys Supplemental Cvrs	LCO: Trans Sys Cvrs LCO: Trans Leak Detect Syss LCO: Primary Tank Leak Detect Syss AC: Trans Cntrls (Leak Detect/Cntrl) AC: Emergency Prep (Significant Release) AC: Trans Pump Admin Lock Cntrls AC: Trans Sys Cvr Removal Cntrls JCO: Supplemental Cvrs	Controls based on accident analysis (Surface Leak Resulting in Pool).	S2

Table 5.4-1. Safety Structures, Systems, and Components and Technical Safety Requirements for Potential S3 and S2 Consequences. (107 Sheets)

ID	Hazardous Condition	Cause	Preventive SSCs	Preventive TSRs	Mitigative SSCs	Mitigative TSRs	Memo	Cons
102S-01.a1	Radioactive/hazardous liquid released to soil surface from tank diversion box/access pit to the ground surface due to misrouting a transfer.	Human error (jumper/blank installation) + Mistransfer to Tank 241-S-102 (450-600 Kgal) overfills tank	SC: Trans Leak Detect Syss SS: Tank Level Detect Syss SS: Salt Well Flow Totalizer	LCO: Trans Leak Detect Syss AC: Trans Cntrls (Leak Prevention/ Detect/Cntrl)	SC: Trans Leak Detect Syss SS: Tank Level Detect Syss SS: Salt Well Flow Totalizer SC: Trans Sys Cvrs	LCO: Trans Sys Cvrs LCO: Trans Leak Detect Syss AC: Trans Cntrls (Leak Detect/Cntrl) AC: Emergency Prep (Significant Release) AC: Trans Pump Admin Lock Cntrls AC: Trans Sys Cvr Removal Cntrls	Controls based on accident analysis (Surface Leak Resulting in Pool).	S2
102S-01.b2	Radioactive liquid released to soil surface from Tank 241-S-102 pump pit due to leak in jumpers connecting tank transfer lines SL-140, SN-242 during saltwell pumping.	Jumper failure + Drain plugged	SC: Trans Leak Detect Syss SS: Tank Level Detect Syss SS: Salt Well Flow Totalizer	LCO: Trans Leak Detect Syss AC: Trans Cntrls (Leak Prevention/ Detect/Cntrl)	SC: Trans Leak Detect Syss SS: Tank Level Detect Syss SS: Salt Well Flow Totalizer SC: Trans Sys Cvrs	LCO: Trans Sys Cvrs LCO: Trans Leak Detect Syss AC: Trans Cntrls (Leak Detect/Cntrl) AC: Emergency Prep (Significant Release) AC: Trans Pump Admin Lock Cntrls AC: Trans Sys Cvr Removal Cntrls	Controls based on accident analysis (Surface Leak Resulting in Pool).	S2

Table 5.4-1. Safety Structures, Systems, and Components and Technical Safety Requirements for Potential S3 and S2 Consequences. (107 Sheets)

ID	Hazardous Condition	Cause	Preventive SSCs	Preventive TSRs	Mitigative SSCs	Mitigative TSRs	Memo	Cons
114SX-02.b	Radioactive liquid released from tank pump pit to the ground surface due to inadvertent pumping activity (pool)	Human error (not normal activity)	SC: Trans Leak Detect Syss SS: Tank Level Detect Syss SS: Salt Well Flow Totalizer	LCO: Trans Leak Detect Syss AC: Trans Cntrls (Leak Prevention/ Detect/Cntrl)	SC: Trans Leak Detect Syss SS: Tank Level Detect Syss SS: Salt Well Flow Totalizer SC: Trans Sys Cvrs	LCO: Trans Sys Cvrs LCO: Trans Leak Detect Syss AC: Trans Cntrls (Leak Detect/Cntrl) AC: Emergency Prep (Significant Release) AC: Trans Pump Admin Lock Cntrls AC: Trans Sys Cvr Removal Cntrls	Controls based on accident analysis (Surface Leak Resulting in Pool).	S2
204AR-09A	Release of airborne and waterborne contamination from the sump pit due to ruptured piping during transfer.	Rupture of transfer piping section above the sump pit	None required	None required	None required	AC: Source Inventory Cntrls	Controls based on accident analysis (Leak from Railcar/ Tank Trailer).	S2
244AR-02.a.07	Release of radioactive aerosols from vessel headspace to building atmosphere with eventual release outside facility due to overfilling of sump causing tank failure	Rain or snow water intrusion	None required	None required	None required	None required	No controls required based on low accident frequency.	S2
CCF-07	Release of radioactive and hazardous materials from tank due to overfill	Disabled or unavailable staff to terminate transfer	SC: Trans Leak Detect Syss	LCO: Trans Leak Detect Syss	SC: Trans Leak Detect Syss SC: Trans Sys Cvrs SC: Trans Sys Supplemental Cvrs	LCO: Trans Sys Cvrs LCO: Trans Leak Detect Syss AC: Trans Pump Admin Lock Cntrls AC: Trans Sys Cvr Removal Cntrls JCO: Supplemental Cvrs	Controls based on accident analysis (Surface Leak Resulting in Pool).	S2

Table 5.4-1. Safety Structures, Systems, and Components and Technical Safety Requirements for Potential S3 and S2 Consequences. (107 Sheets)

ID	Hazardous Condition	Cause	Preventive SSCs	Preventive TSRs	Mitigative SSCs	Mitigative TSRs	Memo	Cons
COB-04	Release of radioactive and/or hazardous material from COB lid due to overflow of COB during transfer (pool)	Leak into COB with floor drain plugged, leak detector failed	SC: Trans Leak Detect Syss SS: Tank Level Detect Syss SS: Salt Well Flow Totalizer	LCO: Trans Leak Detect Syss AC: Trans Cntrls (Leak Prevention/ Detect/Cntrl)	SC: Trans Leak Detect Syss SS: Tank Level Detect Syss SS: Salt Well Flow Totalizer SC: Trans Sys Cvrs SC: Trans Sys Supplemental Cvrs	LCO: Trans Sys Cvrs LCO: Trans Leak Detect Syss AC: Trans Cntrls (Leak Detect/Cntrl) AC: Emergency Prep (Significant Release) AC: Trans Pump Admin Lock Cntrls AC: Trans Sys Cvr Removal Cntrls JCO: Supplemental Cvrs	Controls based on accident analysis (Surface Leak Resulting in Pool).	S2
COB-08	Release of radioactive and/or hazardous material from COB due to over filling of COB (pool)	Transfer pipe or riser rupture, backfilling lower part of COB then filling COB via the floor drain	SC: Trans Leak Detect Syss SS: Tank Level Detect Syss SS: Salt Well Flow Totalizer	LCO: Trans Leak Detect Syss AC: Trans Cntrls (Leak Prevention/ Detect/Cntrl)	SC: Trans Leak Detect Syss SS: Tank Level Detect Syss SS: Salt Well Flow Totalizer SC: Trans Sys Cvrs SC: Trans Sys Supplemental Cvrs	LCO: Trans Sys Cvrs LCO: Trans Leak Detect Syss AC: Trans Cntrls (Leak Detect/Cntrl) AC: Emergency Prep (Significant Release) AC: Trans Pump Admin Lock Cntrls AC: Trans Sys Cvr Removal Cntrls JCO: Supplemental Cvrs	Controls based on accident analysis (Surface Leak Resulting in Pool).	S2

Table 5.4-1. Safety Structures, Systems, and Components and Technical Safety Requirements for Potential S3 and S2 Consequences. (107 Sheets)

ID	Hazardous Condition	Cause	Preventive SSCs	Preventive TSRs	Mitigative SSCs	Mitigative TSRs	Memo	Cons
CRN-11-IC	Release of radioactive and/or toxic materials from facility due to containment top collapse damage by boom failure (pool)	Human error: improper load assembly, rigging, crane overloaded	None required	AC: Dome Loading Cntrls (Lifting Cntrls)	None required	AC: Emergency Prep (Significant Release)	Controls based on accident analyses (Surface Leak Resulting in Pool; and Tank Failure Due to Excessive Loads).	S2
CRN-12-IC	Release of radioactive and/or toxic materials from facility due to containment top collapse by boom failure (pool)	Mechanical failure: corrosion, faulty materials	None required	AC: Dome Loading Cntrls (Lifting Cntrls)	None required	AC: Emergency Prep (Significant Release)	Controls based on accident analyses (Surface Leak Resulting in Pool; and Tank Failure Due to Excessive Loads).	S2
EE-11	Release of radioactive and hazardous materials from tank due to overfilling	Water line breaks and overfills tank	SS: Service Water Flow Totalizer	AC: Tank Service Water Intrusion Mon Program	SS: Service Water Flow Totalizer	AC: Tank Service Water Intrusion Mon Program	Controls based on accident analysis (Surface Leak Resulting in Pool).	S2
1-242A-6-FLW-B	Release of diluted high level tank waste from Feed Tank 241-AW-102 caused by overfilling Tank 241-AW-102 and annulus, aggravated by an uncontrolled evaporator dump when a raw water leak occurs in evaporator condenser room	Rupture of raw water line in condenser/pump room	None required	None required	None required	None required	No controls at TWRS; required controls implemented at 242-A Evaporator.	S2

Table 5.4-1. Safety Structures, Systems, and Components and Technical Safety Requirements for Potential S3 and S2 Consequences. (107 Sheets)

ID	Hazardous Condition	Cause	Preventive SSCs	Preventive TSRs	Mitigative SSCs	Mitigative TSRs	Memo	Cons
I-242S-2-FLW-A	Release of tank waste diluted with contaminated fire water to the soil due to flooding the pump room from a fire main break and pumping the water to Tank 241-SY-102 which overfills the tank and floods pit through risers	Break in fire main	SC: Trans Leak Detect Syss SS: Tank Level Detect Syss	LCO: Trans Leak Detect Syss AC: Trans Cntrls (Leak Prevention/ Detect/Cntrl)	SC: Trans Leak Detect Syss SS: Tank Level Detect Syss SC: Trans Sys Supplemental Cvrs	LCO: Trans Sys Cvrs LCO: Trans Leak Detect Syss AC: Trans Cntrls (Leak Detect/Cntrl) AC: Emergency Prep (Significant Release) AC: Trans Pump Admin Lock Cntrls AC: Trans Sys Cvr Removal Cntrls JCO: Supplemental Cvrs	Controls based on accident analysis (Surface Leak Resulting in Pool).	S2
I-242S-2-FLW-E	Release of high level waste to the ground outside the 242-S building due to unmitigated reverse flow to the pump room from Tank 241-SY-102	Human error - incorrect valve line up	SS: Tank Level Detect Syss	AC: Trans Cntrls (Leak Prevention/ Detect)	SS: Tank Level Detect Syss	AC: Trans Cntrls (Leak Detect)	Controls based on accident analysis (Surface Leak Resulting in Pool).	S2
I-242S-4-FLW-C	Release of high level waste to the ground outside the 242-S building due to unmitigated reverse flow to the condenser room	Human error - incorrect valve line up	SS: Tank Level Detect Syss	AC: Trans Cntrls (Leak Prevention/ Detect)	SS: Tank Level Detect Syss	AC: Trans Cntrls (Leak Detect)	Controls based on accident analysis (Surface Leak Resulting in Pool).	S2

Table 5.4-1. Safety Structures, Systems, and Components and Technical Safety Requirements for Potential S3 and S2 Consequences. (107 Sheets)

ID	Hazardous Condition	Cause	Preventive SSCs	Preventive TSRs	Mitigative SSCs	Mitigative TSRs	Memo	Cons
I-242S-4-FLW-D	Release of tank waste diluted with contaminated water to the soil due to flooding the condenser room which is pumped to Tank 241-SY-102 and overfills the tank and floods pit through risers	Break in fire main	SC: Trans Leak Detect Syss SS: Tank Level Detect Syss	LCO: Trans Leak Detect Syss AC: Trans Cntrls (Leak Prevention/ Detect/Cntrl)	SC: Trans Leak Detect Syss SS: Tank Level Detect Syss SC: Trans Sys Cvrs SC: Trans Sys Supplemental Cvrs	LCO: Trans Sys Cvrs LCO: Trans Leak Detect Syss AC: Trans Cntrls (Leak Detect/Cntrl) AC: Emergency Prep (Significant Release) AC: Trans Pump Admin Lock Cntrls AC: Trans Sys Cvr Removal Cntrls JCO: Supplemental Cvrs	Controls based on accident analysis (Surface Leak Resulting in Pool).	S2
I-PUREX-4-FLW-B	Release (ground surface) of high level tank waste diluted with flush water from the receiver tank due to overfilling from sending excess water	Block valve on flush water inadvertently left opened or leaking	SC: Trans Leak Detect Syss SS: Tank Level Detect Syss	LCO: Trans Leak Detect Syss AC: Trans Cntrls (Leak Prevention/ Detect/Cntrl)	SC: Trans Leak Detect Syss SS: Tank Level Detect Syss SC: Trans Sys Cvrs	LCO: Trans Sys Cvrs LCO: Trans Leak Detect Syss AC: Trans Cntrls (Leak Detect/Cntrl) AC: Emergency Prep (Significant Release) AC: Trans Pump Admin Lock Cntrls AC: Trans Sys Cvr Removal Cntrls	Controls based on accident analysis (Surface Leak Resulting in Pool).	S2

Table 5.4-1. Safety Structures, Systems, and Components and Technical Safety Requirements for Potential S3 and S2 Consequences. (107 Sheets)

ID	Hazardous Condition	Cause	Preventive SSCs	Preventive TSRs	Mitigative SSCs	Mitigative TSRs	Memo	Cons
I-UPLANT-1-LEK-B	Release of low level waste to the ground at the rupture of the line	Inadvertent excavation of line	None required	AC: Excavation Cntrls	None required	None required	Controls based on accident analysis (Spray Leak from Underground Waste Transfer Lines) Excavation of a buried line leads to a surface leak.	S2
OGT-EXT3-01B	Release of radioactive or hazardous material from the primary pipe due to leak caused by truck crash into piping system	Human error, line struck by truck	SC: OGT Concrete Shielding Sys	AC: Trans Cntrls (OGT Protection) AC: Ign Cntrls (Speed Limit)	None required	LCO: Trans Leak Detect Syss AC: Trans Cntrls (Leak Detect/Cntrl) AC: Encasement Seal Loops AC: Emergency Prep (Significant Release)	Controls based on accident analyses (In-Tank Fuel Fire/ Deflagration; and Surface Leak Resulting in Pool).	S2
OGT-FLOW1-02	Release of radioactive or hazardous material from pit overflow due to primary pipe leak caused by over-rated pump	Incorrect pump installed creates excessive flow and pressure on OGT system eroding EPDM pipe causing leak to secondary pipe with drain in pit plugged	SC: OGT Encasement and Connections SC: Trans Leak Detect Syss SS: Tank Level Detect Syss SS: Salt Well Flow Totalizer	LCO: Trans Leak Detect Syss AC: Trans Cntrls (Leak Prevention/ Detect/Cntrl) AC: Encasement Seal Loops	SC: Trans Leak Detect Syss SS: Tank Level Detect Syss SS: Salt Well Flow Totalizer SC: Trans Sys Cvrs SC: Trans Sys Supplemental Cvrs	LCO: Trans Sys Cvrs LCO: Trans Leak Detect Syss AC: Trans Cntrls (Leak Detect/Cntrl) AC: Encasement Seal Loops AC: Emergency Prep (Significant Release) AC: Trans Sys Cvr Removal Cntrls JCO: Supplemental Cvrs	Controls based on accident analysis (Surface Leak Resulting in Pool).	S2

Table 5.4-1. Safety Structures, Systems, and Components and Technical Safety Requirements for Potential S3 and S2 Consequences. (107 Sheets)

ID	Hazardous Condition	Cause	Preventive SSCs	Preventive TSRs	Mitigative SSCs	Mitigative TSRs	Memo	Cons
OGT-FLOW1-03B	Release of radioactive or hazardous material from the primary pipe due to misdirected flow of waste through flush line	JR-1 (3-way valve) mispositioned to flush, two check valves fail, flush disconnect fails (check valve), and reverse flow to water truck, drum or onto ground	SC: Pressure Switch Interlocks or Alarms (Water Service Lines)	LCO: Service Water Pressure Detect Syss AC: Trans Cntrls (Mis-routing) AC: Trans Pump Admin Lock Cntrls	None required	None required	Controls based on accident analysis (Surface Leak Resulting in Pool).	S2
OGT-FLOW1-04	Release of radioactive or hazardous material from the primary pipe due to valve failure resulting in misdirected flow of waste through flush line to flush water supply truck	JR-1 leak (bleed-by), two check valves fail, and flush disconnect fails and pump started causing reverse flow to flush water truck tank	SC: Pressure Switch Interlocks or Alarms (Water Service Lines)	LCO: Service Water Pressure Detect Syss AC: Trans Pump Admin Lock Cntrls	None required	None required	Controls based on accident analysis (Surface Leak Resulting in Pool).	S2
OGT-FLOW1-06	Release of radioactive or hazardous material from the DCRT due to overflow	Exceed volume available in DCRT/ insufficient volume available, condition goes unnoticed until overflow occurs	SC: Trans Leak Detect Syss SS: Tank Level Detect Syss SS: Salt Well Flow Totalizer	LCO: Trans Leak Detect Syss AC: Trans Cntrls (Leak Prevention/ Detect/Cntrl)	SC: Trans Leak Detect Syss SS: Tank Level Detect Syss SS: Salt Well Flow Totalizer SC: Trans Sys Cvrs SC: Trans Sys Supplemental Cvrs	LCO: Trans Sys Cvrs LCO: Trans Leak Detect Syss AC: Trans Cntrls (Leak Detect/Cntrl) AC: Emergency Prep (Significant Release) AC: Trans Pump Admin Lock Cntrls AC: Trans Sys Cvr Removal Cntrls JCO: Supplemental Cvrs	Controls based on accident analysis (Surface Leak Resulting in Pool).	S2

Table 5.4-1. Safety Structures, Systems, and Components and Technical Safety Requirements for Potential S3 and S2 Consequences. (107 Sheets)

ID	Hazardous Condition	Cause	Preventive SSCs	Preventive TSRs	Mitigative SSCs	Mitigative TSRs	Memo	Cons
OGT-FLOW2-01B	Release of radioactive or hazardous material from the primary pipe due to leak caused by incorrect pump installed	Incorrect pump installed creates excessive flow and isolation valve closed on secondary pipe, erosion of EPDM and pressurization of secondary pipe causing leaks from flanges gasket within concrete shield	SC: OGT Encasement and Connections SC: Trans Leak Detect Syss SS: Tank Level Detect Syss SS: Salt Well Flow Totalizer	LCO: Trans Leak Detect Syss AC: Trans Cntrls (Leak Prevention/ Detect/Cntrl) AC: Encasement Seal Loops	SC: Trans Leak Detect Syss SS: Tank Level Detect Syss SS: Salt Well Flow Totalizer SC: Trans Sys Cvrs SC: Trans Sys Supplemental Cvrs	LCO: Trans Sys Cvrs LCO: Trans Leak Detect Syss AC: Trans Cntrls (Leak Detect/Cntrl) AC: Encasement Seal Loops AC: Emergency Prep (Significant Release) AC: Trans Sys Cvr Removal Cntrls JCO: Supplemental Cvrs	Controls based on accident analysis (Surface Leak Resulting in Pool).	S2
OGT-FLOW2-03B	Release of radioactive or hazardous material from the primary pipe due leak caused by incorrect pump installed	Installation of incorrect pump, failure of inner pipe and isolation valves closed on secondary pipe drains causing leak from failed welds on flange within the concrete shield	SC: OGT Encasement and Connections SC: Trans Leak Detect Syss SS: Tank Level Detect Syss SS: Salt Well Flow Totalizer	LCO: Trans Leak Detect Syss AC: Trans Cntrls (Leak Prevention/ Detect/Cntrl) AC: Encasement Seal Loops	SC: Trans Leak Detect Syss SS: Tank Level Detect Syss SS: Salt Well Flow Totalizer SC: Trans Sys Cvrs SC: Trans Sys Supplemental Cvrs	LCO: Trans Sys Cvrs LCO: Trans Leak Detect Syss AC: Trans Cntrls (Leak Detect/Cntrl) AC: Encasement Seal Loops AC: Emergency Prep (Significant Release) AC: Trans Sys Cvr Removal Cntrls JCO: Supplemental Cvrs	Controls based on accident analysis (Surface Leak Resulting in Pool).	S2

Table 5.4-1. Safety Structures, Systems, and Components and Technical Safety Requirements for Potential S3 and S2 Consequences. (107 Sheets)

ID	Hazardous Condition	Cause	Preventive SSCs	Preventive TSRs	Mitigative SSCs	Mitigative TSRs	Memo	Cons
OGT-PRES1-01	Release of radioactive or hazardous material from overflow of pit due to leak caused by high pressure	Heat up of hydro test by heat tape or high ambient temperature, high pressure results from captive fluid heat up, inner pipe damaged, leaks to secondary pipe and drains back to pits and insufficient drainage in pit	SC: OGT Encasement and Connections SC: Trans Leak Detect Syss SS: Tank Level Detect Syss SS: Salt Well Flow Totalizer	LCO: Trans Leak Detect Syss AC: Trans Cntrls (Leak Prevention/ Detect/Cntrl) AC: Encasement Seal Loops	SC: Trans Leak Detect Syss SS: Tank Level Detect Syss SS: Salt Well Flow Totalizer SC: Trans Sys Cvrs SC: Trans Sys Supplemental Cvrs	LCO: Trans Sys Cvrs LCO: Trans Leak Detect Syss AC: Trans Cntrls (Leak Detect/Cntrl) AC: Encasement Seal Loops AC: Emergency Prep (Significant Release) AC: Trans Sys Cvr Removal Cntrls JCO: Supplemental Cvrs	Controls based on accident analysis (Surface Leak Resulting in Pool).	S2
OGT-REAC1-01	Release of radioactive or hazardous material from overflow of pit due to primary pipe leak cause by chemical reaction	Pumping from multiple tanks to single OGT, potential for adverse chemical reactions in pipeline damaging inner pipe, leaks to secondary pipe and drains back to pits and insufficient drainage in pit	SC: OGT Encasement and Connections SC: Trans Leak Detect Syss SS: Tank Level Detect Syss SS: Salt Well Flow Totalizer	LCO: Trans Leak Detect Syss AC: Trans Cntrls (Leak Prevention/ Detect/Cntrl) AC: Encasement Seal Loops	SC: Trans Leak Detect Syss SS: Tank Level Detect Syss SS: Salt Well Flow Totalizer SC: Trans Sys Cvrs SC: Trans Sys Supplemental Cvrs	LCO: Trans Sys Cvrs LCO: Trans Leak Detect Syss AC: Trans Cntrls (Leak Detect/Cntrl) AC: Encasement Seal Loops AC: Emergency Prep (Significant Release) AC: Trans Sys Cvr Removal Cntrls JCO: Supplemental Cvrs	Controls based on accident analysis (Surface Leak Resulting in Pool).	S2

Table 5.4-1. Safety Structures, Systems, and Components and Technical Safety Requirements for Potential S3 and S2 Consequences. (107 Sheets)

ID	Hazardous Condition	Cause	Preventive SSCs	Preventive TSRs	Mitigative SSCs	Mitigative TSRs	Memo	Cons
OGT-TEMP1-03	Release of radioactive or hazardous material from overflow of pit due to leak caused by high temperature	High temperature flush water fails inner pipe causing leak to secondary pipe, drain to pit with insufficient drainage in pit	SC: OGT Encasement and Connections SC: Trans Leak Detect Syss SS: Tank Level Detect Syss SS: Salt Well Flow Totalizer	LCO: Trans Leak Detect Syss AC: Trans Cntrls (Leak Prevention/ Detect/Cntrl) AC: Encasement Seal Loops	SC: Trans Leak Detect Syss SS: Tank Level Detect Syss SS: Salt Well Flow Totalizer SC: Trans Sys Cvrs SC: Trans Sys Supplemental Cvrs	LCO: Trans Sys Cvrs LCO: Trans Leak Detect Syss AC: Trans Cntrls (Leak Detect/Cntrl) AC: Encasement Seal Loops AC: Emergency Prep (Significant Release) AC: Trans Sys Cvr Removal Cntrls JCO: Supplemental Cvrs	Controls based on accident analysis (Surface Leak Resulting in Pool).	S2
TFS-1	Release of radioactive or hazardous waste liquid from overflow of 244-S vault to the 244-S pump pit due to syphon effect on Tank 241-SY-102 (pump does not overflow)	Human Error - failure to close isolation valve (or valve malfunction) following waste transfer which allows flow to continue (syphon) when pump is stopped	SC: Trans Leak Detect Syss SS: Tank Level Detect Syss	LCO: Trans Leak Detect Syss AC: Trans Cntrls (Leak Prevention/ Detect/Cntrl)	SC: Trans Leak Detect Syss SS: Tank Level Detect Syss SC: Trans Sys Cvrs SC: Trans Sys Supplemental Cvrs	LCO: Trans Sys Cvrs LCO: Trans Leak Detect Syss AC: Trans Cntrls (Leak Detect/Cntrl) AC: Emergency Prep (Significant Release) AC: Trans Pump Admin Lock Cntrls AC: Trans Sys Cvr Removal Cntrls JCO: Supplemental Cvrs	Controls based on accident analysis (Surface Leak Resulting in Pool).	S2

Table 5.4-1. Safety Structures, Systems, and Components and Technical Safety Requirements for Potential S3 and S2 Consequences. (107 Sheets)

ID	Hazardous Condition	Cause	Preventive SSCs	Preventive TSRs	Mitigative SSCs	Mitigative TSRs	Memo	Cons
W058-FLOW01	Release of radioactive slurry to the soil surface from overflow in the SY-A or SY-B valve pit due to piping system leak (pool)	Computer failure or human error causing misrouting of material when flow path is not completely connected plus mitigative features failure	SC: Trans Leak Detect Syss SS: Tank Level Detect Syss SS: Salt Well Flow Totalizer	LCO: Trans Leak Detect Syss AC: Trans Cntrls (Leak Prevention/ Detect/Cntrl)	SC: Trans Leak Detect Syss SS: Tank Level Detect Syss SS: Salt Well Flow Totalizer SC: Trans Sys Cvrs SC: Trans Sys Supplemental Cvrs	LCO: Trans Sys Cvrs LCO: Trans Leak Detect Syss AC: Trans Cntrls (Leak Detect/Cntrl) AC: Emergency Prep (Significant Release) AC: Trans Pump Admin Lock Cntrls AC: Trans Sys Cvr Removal Cntrls JCO: Supplemental Cvrs	Controls based on accident analysis (Surface Leak Resulting in Pool).	S2
W058-FLOW03	Release of radioactive slurry to the soil surface from overflow in the SY-A or SY-B valve pit due to piping system leak (pool)	External leak of valve or valves to the valve pit plus mitigative features failure	SC: Trans Leak Detect Syss SS: Tank Level Detect Syss	LCO: Trans Leak Detect Syss AC: Trans Cntrls (Leak Prevention/ Detect/Cntrl)	SC: Trans Leak Detect Syss SS: Tank Level Detect Syss SC: Trans Sys Cvrs	LCO: Trans Sys Cvrs LCO: Trans Leak Detect Syss AC: Trans Cntrls (Leak Detect/Cntrl) AC: Emergency Prep (Significant Release) AC: Trans Pump Admin Lock Cntrls AC: Trans Sys Cvr Removal Cntrls	Controls based on accident analysis (Surface Leak Resulting in Pool).	S2

Table 5.4-1. Safety Structures, Systems, and Components and Technical Safety Requirements for Potential S3 and S2 Consequences. (107 Sheets)

ID	Hazardous Condition	Cause	Preventive SSCs	Preventive TSRs	Mitigative SSCs	Mitigative TSRs	Memo	Cons
W058-FLOW05a	Release of radioactive slurry to the soil surface from overflow in the SY-A or SY-B valve pit due to piping system leak (pool)	Failure of jumper due to misalignment (human error) plus mitigative features failure	SC: Trans Leak Detect Syss SS: Tank Level Detect Syss	LCO: Trans Leak Detect Syss AC: Trans Cntrls (Leak Prevention/ Detect/Cntrl)	SC: Trans Leak Detect Syss SS: Tank Level Detect Syss SC: Trans Sys Cvrs	LCO: Trans Sys Cvrs LCO: Trans Leak Detect Syss AC: Trans Cntrls (Leak Detect/Cntrl) AC: Emergency Prep (Significant Release) AC: Trans Pump Admin Lock Cntrls AC: Trans Sys Cvr Removal Cntrls	Controls based on accident analysis (Surface Leak Resulting in Pool).	S2
W058-FLOW05b	Release of radioactive slurry to the soil surface from overflow in the SY-A or SY-B valve pit due to piping system leak (pool)	Failure of jumper due to gasket failure plus mitigative features failure	SC: Trans Leak Detect Syss SS: Tank Level Detect Syss	LCO: Trans Leak Detect Syss AC: Trans Cntrls (Leak Prevention/ Detect/Cntrl)	SC: Trans Leak Detect Syss SS: Tank Level Detect Syss SC: Trans Sys Cvrs	LCO: Trans Sys Cvrs LCO: Trans Leak Detect Syss AC: Trans Cntrls (Leak Detect/Cntrl) AC: Emergency Prep (Significant Release) AC: Trans Pump Admin Lock Cntrls AC: Trans Sys Cvr Removal Cntrls	Controls based on accident analysis (Surface Leak Resulting in Pool).	S2

Table 5.4-1. Safety Structures, Systems, and Components and Technical Safety Requirements for Potential S3 and S2 Consequences. (107 Sheets)

ID	Hazardous Condition	Cause	Preventive SSCs	Preventive TSRs	Mitigative SSCs	Mitigative TSRs	Memo	Cons
W058-FLOW05c	Release of radioactive slurry to the soil surface from overflow in the SY-A or SY-B valve pit due to piping system leak (pool)	Failure of jumper due to corrosion plus mitigative features failure	SC: Trans Leak Detect Syss SS: Tank Level Detect Syss	LCO: Trans Leak Detect Syss AC: Trans Cntrls (Leak Prevention/ Detect/Cntrl)	SC: Trans Leak Detect Syss SS: Tank Level Detect Syss SC: Trans Sys Cvrs	LCO: Trans Sys Cvrs LCO: Trans Leak Detect Syss AC: Trans Cntrls (Leak Detect/Cntrl) AC: Emergency Prep (Significant Release) AC: Trans Pump Admin Lock Cntrls AC: Trans Sys Cvr Removal Cntrls	Controls based on accident analysis (Surface Leak Resulting in Pool).	S2
W058-FLOW07	Release of radioactive supernate to the soil surface from overflow in the SY-A or SY-B valve pit due to piping system leak (pool)	Computer failure or human error causing misrouting of material when flow path is not completely connected plus mitigative features failure	SC: Trans Leak Detect Syss SS: Tank Level Detect Syss SS: Salt Well Flow Totalizer	LCO: Trans Leak Detect Syss AC: Trans Cntrls (Leak Prevention/ Detect/Cntrl)	SC: Trans Leak Detect Syss SS: Tank Level Detect Syss SS: Salt Well Flow Totalizer SC: Trans Sys Cvrs	LCO: Trans Sys Cvrs LCO: Trans Leak Detect Syss AC: Trans Cntrls (Leak Detect/Cntrl) AC: Emergency Prep (Significant Release) AC: Trans Pump Admin Lock Cntrls AC: Trans Sys Cvr Removal Cntrls	Controls based on accident analysis (Surface Leak Resulting in Pool).	S2

Table 5.4-1. Safety Structures, Systems, and Components and Technical Safety Requirements for Potential S3 and S2 Consequences. (107 Sheets)

ID	Hazardous Condition	Cause	Preventive SSCs	Preventive TSRs	Mitigative SSCs	Mitigative TSRs	Memo	Cons
W058-FLOW09	Release of radioactive supernate to the soil surface from overflow in the SY-A or SY-B valve pit due to piping system leak (pool)	External leak of valve or valves to the valve pit plus mitigative features failure	SC: Trans Leak Detect Syss SS: Tank Level Detect Syss	LCO: Trans Leak Detect Syss AC: Trans Cntrls (Leak Prevention/ Detect/Cntrl)	SC: Trans Leak Detect Syss SS: Tank Level Detect Syss SC: Trans Sys Cvrs	LCO: Trans Sys Cvrs LCO: Trans Leak Detect Syss AC: Trans Cntrls (Leak Detect/Cntrl) AC: Emergency Prep (Significant Release) AC: Trans Pump Admin Lock Cntrls AC: Trans Sys Cvr Removal Cntrls	Controls based on accident analysis (Surface Leak Resulting in Pool).	S2
W058-FLOW11a	Release of radioactive supernate to the soil surface from overflow in the SY-A or SY-B valve pit due to piping system leak (pool)	Failure of jumper due to misalignment (human error) plus mitigative features failure	SC: Trans Leak Detect Syss SS: Tank Level Detect Syss	LCO: Trans Leak Detect Syss AC: Trans Cntrls (Leak Prevention/ Detect/Cntrl)	SC: Trans Leak Detect Syss SS: Tank Level Detect Syss SC: Trans Sys Cvrs	LCO: Trans Sys Cvrs LCO: Trans Leak Detect Syss AC: Trans Cntrls (Leak Detect/Cntrl) AC: Emergency Prep (Significant Release) AC: Trans Pump Admin Lock Cntrls AC: Trans Sys Cvr Removal Cntrls	Controls based on accident analysis (Surface Leak Resulting in Pool).	S2

Table 5.4-1. Safety Structures, Systems, and Components and Technical Safety Requirements for Potential S3 and S2 Consequences. (107 Sheets)

ID	Hazardous Condition	Cause	Preventive SSCs	Preventive TSRs	Mitigative SSCs	Mitigative TSRs	Memo	Cons
W058-FLOW11b	Release of radioactive supernate to the soil surface from overflow in the SY-A or SY-B valve pit due to piping system leak (pool)	Failure of jumper due to gasket failure plus mitigative features failure	SC: Trans Leak Detect Syss SS: Tank Level Detect Syss	LCO: Trans Leak Detect Syss AC: Trans Cntrls (Leak Prevention/ Detect/Cntrl)	SC: Trans Leak Detect Syss SS: Tank Level Detect Syss SC: Trans Sys Cvrs	LCO: Trans Sys Cvrs LCO: Trans Leak Detect Syss AC: Trans Cntrls (Leak Detect/Cntrl) AC: Emergency Prep (Significant Release) AC: Trans Pump Admin Lock Cntrls AC: Trans Sys Cvr Removal Cntrls	Controls based on accident analysis (Surface Leak Resulting in Pool).	S2
W058-FLOW11c	Release of radioactive supernate to the soil surface from overflow in the SY-A or SY-B valve pit due to piping system leak (pool)	Failure of jumper due to corrosion plus mitigative features failure	SC: Trans Leak Detect Syss SS: Tank Level Detect Syss	LCO: Trans Leak Detect Syss AC: Trans Cntrls (Leak Prevention/ Detect/Cntrl)	SC: Trans Leak Detect Syss SS: Tank Level Detect Syss SC: Trans Sys Cvrs	LCO: Trans Sys Cvrs LCO: Trans Leak Detect Syss AC: Trans Cntrls (Leak Detect/Cntrl) AC: Emergency Prep (Significant Release) AC: Trans Pump Admin Lock Cntrls AC: Trans Sys Cvr Removal Cntrls	Controls based on accident analysis (Surface Leak Resulting in Pool).	S2

Table 5.4-1. Safety Structures, Systems, and Components and Technical Safety Requirements for Potential S3 and S2 Consequences. (107 Sheets)

ID	Hazardous Condition	Cause	Preventive SSCs	Preventive TSRs	Mitigative SSCs	Mitigative TSRs	Memo	Cons
W058-FLOW13	Release of radioactive supernate to the soil surface from overflow in the SY-A or SY-B valve pit due to piping system leak (pool)	Open path for pool leak from test riser	SC: Trans Leak Detect Syss SS: Tank Level Detect Syss	LCO: Trans Leak Detect Syss AC: Trans Cntrls (Leak Prevention/ Detect/Cntrl) AC: Encasement Seal Loops	SC: Trans Leak Detect Syss SS: Tank Level Detect Syss SC: Trans Sys Cvrs	LCO: Trans Sys Cvrs LCO: Trans Leak Detect Syss AC: Trans Cntrls (Leak Detect/Cntrl) AC: Encasement Seal Loops AC: Emergency Prep (Significant Release) AC: Trans Pump Admin Lock Cntrls AC: Trans Sys Cvr Removal Cntrl	Controls based on accident analysis (Surface Leak Resulting in Pool).	S2
W058-INTEG01c	Release of radioactive slurry to the soil surface from overflow of a diversion box due to piping system leak	Failure of primary and encasement piping due to corrosion plus mitigative features failure	SC: Trans Leak Detect Syss SS: Tank Level Detect Syss	LCO: Trans Leak Detect Syss AC: Trans Cntrls (Leak Prevention/ Detect/Cntrl)	SC: Trans Leak Detect Syss SS: Tank Level Detect Syss SC: Trans Sys Cvrs	LCO: Trans Sys Cvrs LCO: Trans Leak Detect Syss AC: Trans Cntrls (Leak Detect/Cntrl) AC: Emergency Prep (Significant Release) AC: Trans Pump Admin Lock Cntrls AC: Trans Sys Cvr Removal Cntrls	Controls based on accident analysis (Surface Leak Resulting in Pool).	S2

Table 5.4-1. Safety Structures, Systems, and Components and Technical Safety Requirements for Potential S3 and S2 Consequences. (107 Sheets)

ID	Hazardous Condition	Cause	Preventive SSCs	Preventive TSRs	Mitigative SSCs	Mitigative TSRs	Memo	Cons
W058-INTEG01d	Release of radioactive slurry to the soil surface from overflow of a diversion box due to piping system leak	Failure of primary and encasement piping due to unrecognized material flaw plus mitigative features failure	SC: Trans Leak Detect Syss SS: Tank Level Detect Syss	LCO: Trans Leak Detect Syss AC: Trans Cntrls (Leak Prevention/ Detect/Cntrl)	SC: Trans Leak Detect Syss SS: Tank Level Detect Syss SC: Trans Sys Cvrs	LCO: Trans Sys Cvrs LCO: Trans Leak Detect Syss AC: Trans Cntrls (Leak Detect/Cntrl) AC: Emergency Prep (Significant Release) AC: Trans Pump Admin Lock Cntrls AC: Trans Sys Cvr Removal Cntrls	Controls based on accident analysis (Surface Leak Resulting in Pool).	S2
W058-INTEG03b	Release of radioactive slurry to the soil surface from overflow of a diversion box due to piping system leak	Failure of primary and encasement piping due to external event (airplane crash, volcanism, etc)	SC: Trans Leak Detect Syss SS: Tank Level Detect Syss	LCO: Trans Leak Detect Syss AC: Trans Cntrls (Leak Prevention/ Detect/Cntrl)	SC: Trans Leak Detect Syss SS: Tank Level Detect Syss SC: Trans Sys Cvrs SC: Trans Sys Supplemental Cvrs	LCO: Trans Sys Cvrs LCO: Trans Leak Detect Syss AC: Trans Cntrls (Leak Detect/Cntrl) AC: Emergency Prep (Seismic) AC: Emergency Prep (Significant Release) AC: Trans Pump Admin Lock Cntrls AC: Trans Sys Cvr Removal Cntrls JCO: Supplemental Cvrs	Controls based on accident analyses (Surface Leak Resulting in Pool; and Natural Phenomena - Seismic).	S2

Table 5.4-1. Safety Structures, Systems, and Components and Technical Safety Requirements for Potential S3 and S2 Consequences. (107 Sheets)

ID	Hazardous Condition	Cause	Preventive SSCs	Preventive TSRs	Mitigative SSCs	Mitigative TSRs	Memo	Cons
W058-INTEG05a	Release of radioactive slurry to the soil surface from the underground piping between the SY-A or SY-B valve pit and a diversion box due to piping system leak	Failure of primary and encasement piping due to external event (excavation accident) plus mitigative features failure	None required	AC: Excavation Cntrls	None required	None required	Controls based on accident analysis (Spray Leak from Underground Waste Transfer Lines) Excavation of a buried line leads to a surface leak.	S2
W058-INTEG05b	Release of radioactive slurry to the soil surface from overflow of a diversion box due to piping system leak	Failure of primary and encasement piping due to external event (excavation accident) plus mitigative features failure	None required	AC: Excavation Cntrls	None required	None required	Controls based on accident analysis (Spray Leak from Underground Waste Transfer Lines) Excavation of a buried line leads to a surface leak.	S2
W058-INTEG07b	Release of radioactive slurry to the soil surface from overflow of a diversion box due to piping system leak	Failure of primary and encasement piping due to external event (undermining from broken fluid transfer lines in vicinity) plus mitigative features failure	SC: Trans Leak Detect Syss SS: Tank Level Detect Syss	LCO: Trans Leak Detect Syss AC: Trans Cntrls (Leak Prevention/ Detect/Cntrl)	SC: Trans Leak Detect Syss SS: Tank Level Detect Syss SC: Trans Sys Cvrs SC: Trans Sys Supplemental Cvrs	LCO: Trans Sys Cvrs LCO: Trans Leak Detect Syss AC: Trans Cntrls (Leak Detect/Cntrl) AC: Emergency Prep (Significant Release) AC: Trans Pump Admin Lock Cntrls AC: Trans Sys Cvr Removal Cntrls JCO: Supplemental Cvrs	Controls based on accident analysis (Surface Leak Resulting in Pool).	S2

Table 5.4-1. Safety Structures, Systems, and Components and Technical Safety Requirements for Potential S3 and S2 Consequences. (107 Sheets)

ID	Hazardous Condition	Cause	Preventive SSCs	Preventive TSRs	Mitigative SSCs	Mitigative TSRs	Memo	Cons
W058-INTEG09b	Release of radioactive slurry to the soil surface from overflow of a diversion box due to piping system leak	Failure of primary and encasement piping due to freezing	SC: Trans Leak Detect Syss SS: Tank Level Detect Syss	LCO: Trans Leak Detect Syss AC: Trans Cntrls (Leak Prevention/ Detect/Cntrl)	SC: Trans Leak Detect Syss SS: Tank Level Detect Syss SC: Trans Sys Cvrs SC: Trans Sys Supplemental Cvrs	LCO: Trans Sys Cvrs LCO: Trans Leak Detect Syss AC: Trans Cntrls (Leak Detect/Cntrl) AC: Emergency Prep (Significant Release) AC: Trans Pump Admin Lock Cntrls AC: Trans Sys Cvr Removal Cntrls JCO: Supplemental Cvrs	Controls based on accident analysis (Surface Leak Resulting in Pool).	S2
W058-INTEG11b	Release of radioactive slurry to the soil surface from overflow of a diversion box due to piping system leak	Failure of primary and encasement piping due to seismic event plus mitigative features failure	SC: Trans Leak Detect Syss SS: Tank Level Detect Syss	LCO: Trans Leak Detect Syss AC: Trans Cntrls (Leak Prevention/ Detect/Cntrl)	SC: Trans Leak Detect Syss SS: Tank Level Detect Syss SC: Trans Sys Cvrs SC: Trans Sys Supplemental Cvrs	LCO: Trans Sys Cvrs LCO: Trans Leak Detect Syss AC: Trans Cntrls (Leak Detect/Cntrl) AC: Emergency Prep (Seismic) AC: Emergency Prep (Significant Release) AC: Trans Pump Admin Lock Cntrls AC: Trans Sys Cvr Removal Cntrls JCO: Supplemental Cvrs	Controls based on accident analyses (Surface Leak Resulting in Pool; and Natural Phenomena - Seismic).	S2

Table 5.4-1. Safety Structures, Systems, and Components and Technical Safety Requirements for Potential S3 and S2 Consequences. (107 Sheets)

ID	Hazardous Condition	Cause	Preventive SSCs	Preventive TSRs	Mitigative SSCs	Mitigative TSRs	Memo	Cons
W058-INTEG13c	Release of radioactive supernate to the soil surface from overflow of a diversion box due to piping system leak	Failure of primary and encasement piping due to corrosion plus mitigative features failure	SC: Trans Leak Detect Syss SS: Tank Level Detect Syss	LCO: Trans Leak Detect Syss AC: Trans Cntrls (Leak Prevention/ Detect/Cntrl)	SC: Trans Leak Detect Syss SS: Tank Level Detect Syss SC: Trans Sys Cvrs SC: Trans Sys Supplemental Cvrs	LCO: Trans Sys Cvrs LCO: Trans Leak Detect Syss AC: Trans Cntrls (Leak Detect/Cntrl) AC: Emergency Prep (Significant Release) AC: Trans Pump Admin Lock Cntrls AC: Trans Sys Cvr Removal Cntrls JCO: Supplemental Cvrs	Controls based on accident analysis (Surface Leak Resulting in Pool).	S2
W058-INTEG13d	Release of radioactive supernate to the soil surface from overflow of a diversion box due to piping system leak	Failure of primary and encasement piping due to unrecognized material flaw plus mitigative features failure	SC: Trans Leak Detect Syss SS: Tank Level Detect Syss	LCO: Trans Leak Detect Syss AC: Trans Cntrls (Leak Prevention/ Detect/Cntrl)	SC: Trans Leak Detect Syss SS: Tank Level Detect Syss SC: Trans Sys Cvrs SC: Trans Sys Supplemental Cvrs	LCO: Trans Sys Cvrs LCO: Trans Leak Detect Syss AC: Trans Cntrls (Leak Detect/Cntrl) AC: Emergency Prep (Significant Release) AC: Trans Pump Admin Lock Cntrls AC: Trans Sys Cvr Removal Cntrls JCO Supplemental Cvrs	Controls based on accident analysis (Surface Leak Resulting in Pool).	S2

Table 5.4-1. Safety Structures, Systems, and Components and Technical Safety Requirements for Potential S3 and S2 Consequences. (107 Sheets)

ID	Hazardous Condition	Cause	Preventive SSCs	Preventive TSRs	Mitigative SSCs	Mitigative TSRs	Memo	Cons
W058-INTEG14b	Release of radioactive supernate to the soil surface from overflow of a diversion box due to piping system leak	Failure of primary and encasement piping due to external event (airplane crash, volcanism, etc) plus mitigative features failure	SC: Trans Leak Detect Syss SS: Tank Level Detect Syss	LCO: Trans Leak Detect Syss AC: Trans Cntrls (Leak Prevention/ Detect/Cntrl)	SC: Trans Leak Detect Syss SS: Tank Level Detect Syss SC: Trans Sys Cvrs	LCO: Trans Sys Cvrs LCO: Trans Leak Detect Syss AC: Trans Cntrls (Leak Detect/Cntrl) AC: Emergency Prep (Seismic) AC: Emergency Prep (Significant Release) AC: Trans Pump Admin Lock Cntrls AC: Trans Sys Cvr Removal Cntrls	Controls based on accident analyses (Surface Leak Resulting in Pool; and Natural Phenomena - Seismic).	S2
W058-INTEG16a	Release of radioactive supernate to the soil surface from the underground piping between the SY-A or SY-B valve pit and a diversion box due to piping system leak	Failure of primary and encasement piping due to external event (excavation accident) plus mitigative features failure	None required	AC: Excavation Cntrls	None required	None required	Controls based on accident analysis (Spray Leak from Underground Waste Transfer Lines) Excavation of a buried line leads to a surface leak.	S2
W058-INTEG16b	Release of radioactive supernate to the soil surface from overflow of a diversion box due to piping system leak	Failure of primary and encasement piping due to external event (excavation accident) plus mitigative features failure	None required	AC: Excavation Cntrls	None required	None required	Controls based on accident analysis (Spray Leak from Underground Waste Transfer Lines) Excavation of a buried line leads to a surface leak.	S2

Table 5.4-1. Safety Structures, Systems, and Components and Technical Safety Requirements for Potential S3 and S2 Consequences. (107 Sheets)

ID	Hazardous Condition	Cause	Preventive SSCs	Preventive TSRs	Mitigative SSCs	Mitigative TSRs	Memo	Cons
W058-INTEG18b	Release of radioactive supernate to the soil surface from overflow of a diversion box due to piping system leak	Failure of primary and encasement piping due to external event (undermining from broken fluid transfer lines in vicinity) plus mitigative features failure	SC: Trans Leak Detect Syss SS: Tank Level Detect Syss	LCO: Trans Leak Detect Syss AC: Trans Cntrls (Leak Prevention/ Detect/Cntrl)	SC: Trans Leak Detect Syss SS: Tank Level Detect Syss SC: Trans Sys Cvrs SC: Trans Sys Supplemental Cvrs	LCO: Trans Sys Cvrs LCO: Trans Leak Detect Syss AC: Trans Cntrls (Leak Detect/Cntrl) AC: Emergency Prep (Significant Release) AC: Trans Pump Admin Lock Cntrls AC: Trans Sys Cvr Removal Cntrls JCO: Supplemental Cvrs	Controls based on accident analysis (Surface Leak Resulting in Pool).	S2
W058-INTEG20b	Release of radioactive supernate to the soil surface from overflow of a diversion box due to piping system leak	Failure of primary and encasement piping due to freezing	SC: Trans Leak Detect Syss SS: Tank Level Detect Syss	LCO: Trans Leak Detect Syss AC: Trans Cntrls (Leak Prevention/ Detect/Cntrl)	SC: Trans Leak Detect Syss SS: Tank Level Detect Syss SC: Trans Sys Cvrs SC: Trans Sys Supplemental Cvrs	LCO: Trans Sys Cvrs LCO: Trans Leak Detect Syss AC: Trans Cntrls (Leak Detect/Cntrl) AC: Emergency Prep (Significant Release) AC: Trans Pump Admin Lock Cntrls AC: Trans Sys Cvr Removal Cntrls JCO: Supplemental Cvrs	Controls based on accident analysis (Surface Leak Resulting in Pool).	S2

Table 5.4-1. Safety Structures, Systems, and Components and Technical Safety Requirements for Potential S3 and S2 Consequences. (107 Sheets)

ID	Hazardous Condition	Cause	Preventive SSCs	Preventive TSRs	Mitigative SSCs	Mitigative TSRs	Memo	Cons
W058-INTEG24	Release of radioactive slurry to the soil surface from overflow in the SY-A or SY-B valve pit due to piping system leak	External event (airplane crash, etc)	SC: Trans Leak Detect Syss SS: Tank Level Detect Syss	LCO: Trans Leak Detect Syss AC: Trans Cntrls (Leak Prevention/ Detect/Cntrl)	SC: Trans Leak Detect Syss SS: Tank Level Detect Syss SC: Trans Sys Cvrs	LCO: Trans Sys Cvrs LCO: Trans Leak Detect Syss AC: Trans Cntrls (Leak Detect/Cntrl) AC: Emergency Prep (Seismic) AC: Emergency Prep (Significant Release) AC: Trans Pump Admin Lock Cntrls AC: Trans Sys Cvr Removal Cntrls	Controls based on accident analyses (Surface Leak Resulting in Pool; and Natural Phenomena - Seismic).	S2
W058-INTEG26	Release of radioactive slurry to the soil surface from overflow in the SY-A or SY-B valve pit due to piping system leak	Seismic event plus mitigative features failure	SC: Trans Leak Detect Syss SS: Tank Level Detect Syss	LCO: Trans Leak Detect Syss AC: Trans Cntrls (Leak Prevention/ Detect/Cntrl)	SC: Trans Leak Detect Syss SS: Tank Level Detect Syss SC: Trans Sys Cvrs	LCO: Trans Sys Cvrs LCO: Trans Leak Detect Syss AC: Trans Cntrls (Leak Detect/Cntrl) AC: Emergency Prep (Seismic) AC: Emergency Prep (Significant Release) AC: Trans Pump Admin Lock Cntrls AC: Trans Sys Cvr Removal Cntrls	Controls based on accident analyses (Surface Leak Resulting in Pool; and Natural Phenomena - Seismic).	S2

Table 5.4-1. Safety Structures, Systems, and Components and Technical Safety Requirements for Potential S3 and S2 Consequences. (107 Sheets)

ID	Hazardous Condition	Cause	Preventive SSCs	Preventive TSRs	Mitigative SSCs	Mitigative TSRs	Memo	Cons
W058-INTEG28	Release of radioactive supernate to the soil surface from overflow in the SY-A or SY-B valve pit due to piping system leak	External event (airplane crash, etc)	SC: Trans Leak Detect Syss SS: Tank Level Detect Syss	LCO: Trans Leak Detect Syss AC: Trans Cntrls (Leak Prevention/ Detect/Cntrl)	SC: Trans Leak Detect Syss SS: Tank Level Detect Syss SC: Trans Sys Cvrs	LCO: Trans Sys Cvrs LCO: Trans Leak Detect Syss AC: Trans Cntrls (Leak Detect/Cntrl) AC: Emergency Prep (Significant Release) AC: Emergency Prep (Seismic) AC: Trans Pump Admin Lock Cntrls AC: Trans Sys Cvr Removal Cntrls	Controls based on accident analyses (Surface Leak Resulting in Pool; and Natural Phenomena - Seismic).	S2
W058-INTEG30	Release of radioactive supernate to the soil surface from overflow in the SY-A or SY-B valve pit due to piping system leak (pool)	Seismic event	SC: Trans Leak Detect Syss SS: Tank Level Detect Syss	LCO: Trans Leak Detect Syss AC: Trans Cntrls (Leak Prevention/ Detect/Cntrl)	SC: Trans Leak Detect Syss SS: Tank Level Detect Syss SC: Trans Sys Cvrs	LCO: Trans Sys Cvrs LCO: Trans Leak Detect Syss AC: Trans Cntrls (Leak Detect/Cntrl) AC: Emergency Prep (Seismic) AC: Emergency Prep (Significant Release) AC: Trans Pump Admin Lock Cntrls AC: Trans Sys Cvr Removal Cntrls	Controls based on accident analyses (Surface Leak Resulting in Pool; and Natural Phenomena - Seismic).	S2

Table 5.4-1. Safety Structures, Systems, and Components and Technical Safety Requirements for Potential S3 and S2 Consequences. (107 Sheets)

ID	Hazardous Condition	Cause	Preventive SSCs	Preventive TSRs	Mitigative SSCs	Mitigative TSRs	Memo	Cons
W058-PRES03	Release of radioactive supernate to the soil surface from overflow in the SY-A or SY-B valve pit due to piping system leak (pool)	Water hammer plus mitigative features failure	SC: Trans Leak Detect Syss SS: Tank Level Detect Syss	LCO: Trans Leak Detect Syss AC: Trans Cntrls (Leak Prevention/ Detect/Cntrl)	SC: Trans Leak Detect Syss SS: Tank Level Detect Syss SC: Trans Sys Cvrs	LCO: Trans Sys Cvrs LCO: Trans Leak Detect Syss AC: Trans Cntrls (Leak Detect/Cntrl) AC: Emergency Prep (Significant Release) AC: Trans Pump Admin Lock Cntrls AC: Trans Sys Cvr Removal Cntrls	Controls based on accident analysis (Surface Leak Resulting in Pool).	S2
XS-01-FLOW05	Release of radioactive contaminated liquid from transfer piping to 244 TX DCRT via the raw water system due to reverse flow of liquid waste (pool)	Mis-valving causes mixing of waste into raw water system that causes leak in the flush pit cover block	SC: Trans Leak Detect Syss SC: Pressure Switch Interlocks or Alarms (Water Service Lines) SS: Tank Level Detect Syss SS: Salt Well Flow Totalizer	LCO: Service Water Pressure Detect Syss AC: Trans Cntrls (Leak Prevention/ Detect/Cntrl)	SC: Trans Leak Detect Syss SS: Tank Level Detect Syss SS: Salt Well Flow Totalizer SC: Trans Sys Cvrs SC: Trans Sys Supplemental Cvrs	LCO: Trans Sys Cvrs LCO: Trans Leak Detect Syss AC: Trans Cntrls (Leak Detect/Cntrl) AC: Emergency Prep (Significant Release) AC: Trans Pump Admin Lock Cntrls AC: Trans Sys Cvr Removal Cntrls JCO: Supplemental Cvrs	Controls based on accident analysis (Surface Leak Resulting in Pool).	S2

Table 5.4-1. Safety Structures, Systems, and Components and Technical Safety Requirements for Potential S3 and S2 Consequences. (107 Sheets)

ID	Hazardous Condition	Cause	Preventive SSCs	Preventive TSRs	Mitigative SSCs	Mitigative TSRs	Memo	Cons
XS-01-FLOW06	Release of liquid radioactive waste from saltwell pumping transfer piping in DCRT pump pit to surface due to overflow (pool)	Open jumper in single shell tank pump pit leads to overflowing of pump pit	SC: Trans Leak Detect Syss SS: Tank Level Detect Syss SS: Salt Well Flow Totalizer	LCO: Trans Leak Detect Syss AC: Trans Cntrls (Leak Prevention/ Detect/Cntrl)	SC: Trans Leak Detect Syss SS: Tank Level Detect Syss SS: Salt Well Flow Totalizer SC: Trans Sys Cvrs SC: Trans Sys Supplemental Cvrs	LCO: Trans Sys Cvrs LCO: Trans Leak Detect Syss AC: Trans Cntrls (Leak Detect/Cntrl) AC: Emergency Prep (Significant Release) AC: Trans Pump Admin Lock Cntrls AC: Trans Sys Cvr Removal Cntrls JCO: Supplemental Cvrs	Controls based on accident analysis (Surface Leak Resulting in Pool).	S2
XS-03-TEMP04 XS-21-TEMP (244-S-DCRT)	Release of liquid radioactive waste from 244 TX DCRT due to overflow	Freezing temperatures causing raw water line break-leak with leakage to tank causes overflow	SS: Service Water Flow Totalizer	AC: Tank Service Water Intrusion Mon Program	SS: Service Water Flow Totalizer	AC: Tank Service Water Intrusion Mon Program	Controls based on accident analysis (Surface Leak Resulting in Pool).	S2
XS-11-LEVE01	Release of radioactive waste from diversion box to surface due to overflow of transfer from 244 TX	Plugged drain and misrouting causes overflow	SC: Trans Leak Detect Syss SS: Tank Level Detect Syss SS: Salt Well Flow Totalizer	LCO: Trans Leak Detect Syss AC: Trans Cntrls (Leak Prevention/ Detect/Cntrl)	SC: Trans Leak Detect Syss SS: Tank Level Detect Syss SS: Salt Well Flow Totalizer SC: Trans Sys Cvrs	LCO: Trans Sys Cvrs LCO: Trans Leak Detect Syss AC: Trans Cntrls (Leak Detect/Cntrl) AC: Emergency Prep (Significant Release) AC: Trans Pump Admin Lock Cntrls AC: Trans Sys Cvr Removal Cntrls	Controls based on accident analysis (Surface Leak Resulting in Pool).	S2

Table 5.4-1. Safety Structures, Systems, and Components and Technical Safety Requirements for Potential S3 and S2 Consequences. (107 Sheets)

ID	Hazardous Condition	Cause	Preventive SSCs	Preventive TSRs	Mitigative SSCs	Mitigative TSRs	Memo	Cons
XS-11-LEVE02	Release of radioactive waste from diversion box to surface due to overflow of transfer from 244 TX	Plugged drain and open jumper causes overflow	SC: Trans Leak Detect Syss SS: Tank Level Detect Syss SS: Salt Well Flow Totalizer	LCO: Trans Leak Detect Syss AC: Trans Cntrls (Leak Prevention/ Detect/Cntrl)	SC: Trans Leak Detect Syss SS: Tank Level Detect Syss SS: Salt Well Flow Totalizer SC: Trans Sys Cvrs	LCO: Trans Sys Cvrs LCO: Trans Leak Detect Syss AC: Trans Cntrls (Leak Detect/Cntrl) AC: Emergency Prep (Significant Release) AC: Trans Pump Admin Lock Cntrls AC: Trans Sys Cvr Removal Cntrls	Controls based on accident analysis (Surface Leak Resulting in Pool).	S2
XS-11-LEVE03	Release of radioactive waste from diversion box to surface due to overflow	Plugged drain and piping leak causes overflow	SC: Trans Leak Detect Syss SS: Tank Level Detect Syss SS: Salt Well Flow Totalizer	LCO: Trans Leak Detect Syss AC: Trans Cntrls (Leak Prevention/ Detect/Cntrl)	SC: Trans Leak Detect Syss SS: Tank Level Detect Syss SS: Salt Well Flow Totalizer SC: Trans Sys Cvrs	LCO: Trans Sys Cvrs LCO: Trans Leak Detect Syss AC: Trans Cntrls (Leak Detect/Cntrl) AC: Emergency Prep (Significant Release) AC: Trans Pump Admin Lock Cntrls AC: Trans Sys Cvr Removal Cntrls	Controls based on accident analysis (Surface Leak Resulting in Pool).	S2

Table 5.4-1. Safety Structures, Systems, and Components and Technical Safety Requirements for Potential S3 and S2 Consequences. (107 Sheets)

ID	Hazardous Condition	Cause	Preventive SSCs	Preventive TSRs	Mitigative SSCs	Mitigative TSRs	Memo	Cons
XS-12-FLOW05	Release of radioactive waste from diversion box to surface due to overflow of transfer from 244 TX	Backflow from catch tank causes overflow from diversion box	SC: Trans Leak Detect Syss SS: Tank Level Detect Syss	LCO: Trans Leak Detect Syss AC: Trans Cntrls (Leak Prevention/ Detect/Cntrl)	SC: Trans Leak Detect Syss SS: Tank Level Detect Syss SC: Trans Sys Cvrs	LCO: Trans Sys Cvrs LCO: Trans Leak Detect Syss AC: Trans Cntrls (Leak Detect/Cntrl) AC: Emergency Prep (Significant Release) AC: Trans Pump Admin Lock Cntrls AC: Trans Sys Cvr Removal Cntrls	Controls based on accident analysis (Surface Leak Resulting in Pool).	S2
XS-20-FLOW08	Release of radioactive waste from 244 TX DCRT to surface due to overflow	Transfer of excess waste to 244 TX DCRT due to improper valve lineup causes overflow	SC: Trans Leak Detect Syss SS: Tank Level Detect Syss SS: Salt Well Flow Totalizer	LCO: Trans Leak Detect Syss AC: Trans Cntrls (Leak Prevention/ Detect/Cntrl)	SC: Trans Leak Detect Syss SS: Tank Level Detect Syss SS: Salt Well Flow Totalizer SC: Trans Sys Cvrs	LCO: Trans Sys Cvrs LCO: Trans Leak Detect Syss AC: Trans Cntrls (Leak Detect/Cntrl) AC: Emergency Prep (Significant Release) AC: Trans Pump Admin Lock Cntrls AC: Trans Sys Cvr Removal Cntrls	Controls based on accident analysis (Surface Leak Resulting in Pool).	S2

Table 5.4-1. Safety Structures, Systems, and Components and Technical Safety Requirements for Potential S3 and S2 Consequences. (107 Sheets)

ID	Hazardous Condition	Cause	Preventive SSCs	Preventive TSRs	Mitigative SSCs	Mitigative TSRs	Memo	Cons
XS-20-FLOW09	Release of radioactive waste from 244S DCRT to surface due to overflow	Transfer of waste from 244 TX DCRT due to improper valve lineup causes overflow	SC: Trans Leak Detect Syss SS: Tank Level Detect Syss	LCO: Trans Leak Detect Syss AC: Trans Cntrls (Leak Prevention/ Detect/Cntrl)	SC: Trans Leak Detect Syss SS: Tank Level Detect Syss SC: Trans Sys Cvrs	LCO: Trans Sys Cvrs LCO: Trans Leak Detect Syss AC: Trans Cntrls (Leak Detect/Cntrl) AC: Emergency Prep (Significant Release) AC: Trans Pump Admin Lock Cntrls AC: Trans Sys Cvr Removal Cntrls	Controls based on accident analysis (Surface Leak Resulting in Pool).	S2
XS-35-FLOW02	Release of radioactive waste to surface from 242-S Evaporator sump due to backflow to and overflow	Human error of leaving open flow path after emptying the sump and backflow and subsequent overflow	SS: Tank Level Detect Syss	AC: Trans Cntrls (Leak Prevention/ Detect)	SS: Tank Level Detect Syss	AC: Trans Cntrls (Leak Detect)	Controls based on accident analysis (Surface Leak Resulting in Pool).	S2
XS-37-FLOW01	Release of radioactive liquid waste from catch tank to surface due to overfilling (pool)	Leak of transfer piping with drainage to catch tank causes overflow	SC: Trans Leak Detect Syss SS: Tank Level Detect Syss SS: Salt Well Flow Totalizer	LCO: Trans Leak Detect Syss AC: Trans Cntrls (Leak Prevention/ Detect/Cntrl)	SC: Trans Leak Detect Syss SS: Tank Level Detect Syss SS: Salt Well Flow Totalizer SC: Trans Sys Cvrs SC: Trans Sys Supplemental Cvrs	LCO: Trans Sys Cvrs LCO: Trans Leak Detect Syss AC: Trans Cntrls (Leak Detect/Cntrl) AC: Emergency Prep (Significant Release) AC: Trans Pump Admin Lock Cntrls AC: Trans Sys Cvr Removal Cntrls JCO: Supplemental Cvrs	Controls based on accident analysis (Surface Leak Resulting in Pool).	S2

Table 5.4-1. Safety Structures, Systems, and Components and Technical Safety Requirements for Potential S3 and S2 Consequences. (107 Sheets)

ID	Hazardous Condition	Cause	Preventive SSCs	Preventive TSRs	Mitigative SSCs	Mitigative TSRs	Memo	Cons
XS-41A-FLOW01	Release of radioactive waste from vent station nozzle pit to surface due to overflow	Catastrophic failure of vent piping causes overflow of nozzle pit	SC: Trans Leak Detect Syss SS: Tank Level Detect Syss	LCO: Trans Leak Detect Syss AC: Trans Cntrls (Leak Prevention/ Detect/Cntrl)	SC: Trans Leak Detect Syss SS: Tank Level Detect Syss SC: Trans Sys Cvrs	LCO: Trans Sys Cvrs LCO: Trans Leak Detect Syss AC: Trans Cntrls (Leak Detect/Cntrl) AC: Emergency Prep (Significant Release) AC: Trans Pump Admin Lock Cntrls AC: Trans Sys Cvr Removal Cntrls	Controls based on accident analysis (Surface Leak Resulting in Pool).	S2
XS-41A-FLOW02	Release of radioactive waste to surface from vent station nozzle pit due to overflow	Vent valve left open or leaking during transfer causes overflow	SC: Trans Leak Detect Syss SS: Tank Level Detect Syss	LCO: Trans Leak Detect Syss AC: Trans Cntrls (Leak Prevention/ Detect/Cntrl)	SC: Trans Leak Detect Syss SS: Tank Level Detect Syss SC: Trans Sys Cvrs	LCO: Trans Sys Cvrs LCO: Trans Leak Detect Syss AC: Trans Cntrls (Leak Detect/Cntrl) AC: Emergency Prep (Significant Release) AC: Trans Pump Admin Lock Cntrls AC: Trans Sys Cvr Removal Cntrls	Controls based on accident analysis (Surface Leak Resulting in Pool).	S2

Table 5.4-1. Safety Structures, Systems, and Components and Technical Safety Requirements for Potential S3 and S2 Consequences. (107 Sheets)

ID	Hazardous Condition	Cause	Preventive SSCs	Preventive TSRs	Mitigative SSCs	Mitigative TSRs	Memo	Cons
XS-41B-LEVE03	Release of radioactive waste to surface from vent station nozzle pit due to overflow	Failure to empty catch tank, causing overflow of tank and pit due to transfer failure	SC: Trans Leak Detect Syss SS: Tank Level Detect Syss	LCO: Trans Leak Detect Syss AC: Trans Cntrls (Leak Prevention/ Detect/Cntrl)	SC: Trans Leak Detect Syss SS: Tank Level Detect Syss SC: Trans Sys Cvrs	LCO: Trans Sys Cvrs LCO: Trans Leak Detect Syss AC: Trans Cntrls (Leak Detect/Cntrl) AC: Emergency Prep (Significant Release) AC: Trans Pump Admin Lock Cntrls AC: Trans Sys Cvr Removal Cntrls	Controls based on accident analysis (Surface Leak Resulting in Pool).	S2
XS-52-FLOW02	Release of radioactive waste from Tank 244-CR-003 to surface due to overflow (pool)	Mis-valving or valve failure during cross-site transfer causes overflow	SC: Trans Leak Detect Syss SS: Tank Level Detect Syss	LCO: Trans Leak Detect Syss AC: Trans Cntrls (Leak Prevention/ Detect/Cntrl)	SC: Trans Leak Detect Syss SS: Tank Level Detect Syss SC: Trans Sys Cvrs	LCO: Trans Sys Cvrs LCO: Trans Leak Detect Syss AC: Trans Cntrls (Leak Detect/Cntrl) AC: Emergency Prep (Significant Release) AC: Trans Pump Admin Lock Cntrls AC: Trans Sys Cvr Removal Cntrls	Controls based on accident analysis (Surface Leak Resulting in Pool).	S2
SUBSURFACE LEAK RESULTING IN POOL (Section 5.3.2.19)								
XS-07-FLOW02	Release of radioactive waste to soil from transfer piping out of 244 TX DCRT due to leak in primary pipe and encasement	Corrosion of inner and outer pipe	SC: Pipe Encasements	AC: Encasement Seal Loops	SS: Tank Level Detect Syss SS: Salt Well Flow Totalizer	AC: Trans Cntrls (Leak Detect/Cntrl) AC: Emergency Prep (Significant Release)	Controls based on accident analysis (Subsurface Leak Resulting in Pool).	S2

Table 5.4-1. Safety Structures, Systems, and Components and Technical Safety Requirements for Potential S3 and S2 Consequences. (107 Sheets)

ID	Hazardous Condition	Cause	Preventive SSCs	Preventive TSRs	Mitigative SSCs	Mitigative TSRs	Memo	Cons
XS-07-FLOW06	Release of radioactive waste to soil from transfer pipe out of 244 TX DCRT due to leak in primary pipe and encasement	Water hammer causes failure of primary pipe and encasement	SC: Pipe Encasements	AC: Trans Pump Admin Lock Cntrls AC: Encasement Seal Loops	SS: Tank Level Detect Syss SS: Salt Well Flow Totalizer	AC: Trans Cntrls (Leak Detect/Cntrl) AC: Emergency Prep (Significant Release)	Controls based on accident analysis (Subsurface Leak Resulting in Pool; and Surface Leak Resulting in Pool).	S2
102AW-01-FLOW02	Release of radioactive waste to soil from transfer piping which runs to Tank 241-AW-102 due to leak from primary pipe and encasement	Excavation accident fails primary pipe and encasement	None required	AC: Excavation Cntrls	None required	None required	Controls based on accident analysis (Spray Leak from Underground Waste Transfer Lines).	S2
102AW-01-FLOW03	Release of radioactive waste to soil from transfer pipe to Tank 241-AW-102 due to leak of radioactive waste from primary pipe and encasement	Corrosion of inner and outer pipe cause failure of primary pipe and encasement	SC: Pipe Encasements	AC: Encasement Seal Loops	SS: Tank Level Detect Syss SS: Salt Well Flow Totalizer	AC: Trans Cntrls (Leak Detect/Cntrl) AC: Emergency Prep (Significant Release)	Controls based on accident analysis (Subsurface Leak Resulting in Pool).	S2
102AW-01-FLOW04	Release of radioactive waste to soil from transfer pipe to Tank 241-AW-102 due to leak of radioactive waste from primary pipe and encasement	High structural loading from traffic or cranes fails primary pipe and encasement	None required	None required	None required	None required	No controls required based on low accident frequency.	S2
102AW-01-FLOW05	Release of radioactive waste to soil from transfer piping to Tank 241-AW-102 due to leak from primary pipe and encasement	Seismic event fails primary pipe and encasement	SC: Pipe Encasements	AC: Encasement Seal Loops	SS: Tank Level Detect Syss SS: Salt Well Flow Totalizer	AC: Trans Cntrls (Leak Detect/Cntrl) AC: Emergency Prep (Significant Release) AC: Emergency Prep (Seismic)	Controls based on accident analyses (Subsurface Leak Resulting in Pool; and Natural Phenomena - Seismic).	S2

Table 5.4-1. Safety Structures, Systems, and Components and Technical Safety Requirements for Potential S3 and S2 Consequences. (107 Sheets)

ID	Hazardous Condition	Cause	Preventive SSCs	Preventive TSRs	Mitigative SSCs	Mitigative TSRs	Memo	Cons
102AW-01-FLOW06	Release of radioactive waste to soil from transfer pipe to Tank 241-AW-102 due to leak of radioactive waste from primary pipe and encasement	Undermining due to leak of nearby pipes cause failure of primary pipe and encasement	SC: Pipe Encasements	AC: Encasement Seal Loops	SS: Tank Level Detect Syss SS: Salt Well Flow Totalizer	AC: Trans Cntrls (Leak Detect/Cntrl) AC: Emergency Prep (Significant Release)	Controls based on accident analysis (Subsurface Leak Resulting in Pool).	S2
102AW-01-FLOW07	Release of radioactive waste to soil from transfer pipe to Tank 241-AW-102 due to leak of radioactive waste from primary pipe and encasement	Water hammer cause failure of primary pipe and encasement	SC: Pipe Encasements	AC: Trans Pump Admin Lock Cntrls AC: Encasement Seal Loops	SS: Tank Level Detect Syss SS: Salt Well Flow Totalizer	AC: Trans Cntrls (Leak Detect/Cntrl) AC: Emergency Prep (Significant Release)	Controls based on accident analysis (Subsurface Leak Resulting in Pool).	S2
CP-GRT-02	Release of radioactive or toxic material to soil surface (pool) from transfer line due to puncture of line during transfer	Human error AND Mechanical failure of push pipe integrity inside the transfer line	None required	AC: Excavation Cntrls	None required	None required	Controls based on accident analysis (Spray Leak from Underground Waste Transfer Lines)	S3
CP-MSP-01	Release of radioactive or toxic material to soil surface (pool) from transfer line due to puncture of line during transfer	Human error caused puncture to transfer line during push operations	None required	AC: Excavation Cntrls	None required	None required	Controls based on accident analysis (Spray Leak from Underground Waste Transfer Lines)	S2
CP-SSP-01	Release of radioactive or toxic material to soil surface (pool) from transfer line due to puncture of line during transfer	Human error caused puncture to transfer line during push operations.	None required	AC: Excavation Cntrls	None required	None required	Controls based on accident analysis (Spray Leak from Underground Waste Transfer Lines)	S3
CP-SSP-16	Release of radioactive or toxic material to soil surface (pool) from transfer line due to puncture of line during transfer	Human error AND Mechanical failure of push pipe integrity inside the transfer line	None required	AC: Excavation Cntrls	None required	None required	Controls based on accident analysis (Spray Leak from Underground Waste Transfer Lines)	S3
CRN-03-IB	Release of radioactive and/or toxic materials from facility due to MISF containment collapse	Human error results in excessive weight on top of containment	None required	AC: Dome Loading Cntrls (Excessive Loads)	None required	None required	Controls based on accident analysis (Tank Failure Due to Excessive Loads).	S2

Table 5.4-1. Safety Structures, Systems, and Components and Technical Safety Requirements for Potential S3 and S2 Consequences. (107 Sheets)

ID	Hazardous Condition	Cause	Preventive SSCs	Preventive TSRs	Mitigative SSCs	Mitigative TSRs	Memo	Cons
CRN-04-IB	Release of radioactive and/or toxic materials from facility due to MISF containment collapse	Crane or rigging failures drop load resulting in large impact to top of containment	None required	AC: Dome Loading Cntrls (Lifting Cntrls)	None required	None required	Controls based on accident analysis (Tank Failure Due to Excessive Loads).	S2
CRN-21-IB	Release of radioactive or toxic materials from aboveground facility bottom due to loss of vertical load control, dropping crane load into facility (surface pool)	Human error: improper load assembly, rigging, positioning error	None required	AC: Dome Loading Cntrls (Lifting Cntrls)	None required	None required	Controls based on accident analysis (Tank Failure Due to Excessive Loads).	S2
CRN-22-IB	Release of radioactive or toxic materials from aboveground facility bottom due to loss of vertical load control, dropping crane load into facility (surface pool)	Mechanical failure: corrosion, faulty materials, hydraulics	None required	AC: Dome Loading Cntrls (Lifting Cntrls)	None required	None required	Controls based on accident analysis (Tank Failure Due to Excessive Loads).	S2
W058-INTEG01a	Release of radioactive slurry to the soil surface from the underground piping between the SY-A or SY-B valve pit and a diversion box due to piping system leak	Failure of primary and encasement piping due to corrosion plus mitigative features failure	SC: Pipe Encasements	AC: Encasement Seal Loops	SS: Tank Level Detect Syss SS: Salt Well Flow Totalizer	AC: Trans Cntrls (Leak Detect/Cntrl) AC: Emergency Prep (Significant Release)	Controls based on accident analysis (Subsurface Leak Resulting in Pool).	S2
W058-INTEG01b	Release of radioactive slurry to the soil surface from the underground piping between the SY-A or SY-B valve pit and a diversion box due to piping system leak	Failure of primary and encasement piping due to unrecognized material flaw plus mitigative features failure	SC: Pipe Encasements	AC: Encasement Seal Loops	SS: Tank Level Detect Syss SS: Salt Well Flow Totalizer	AC: Trans Cntrls (Leak Detect/Cntrl) AC: Emergency Prep (Significant Release)	Controls based on accident analysis (Subsurface Leak Resulting in Pool).	S2
W058-INTEG03a	Release of radioactive slurry to the soil surface from the underground piping between the SY-A or SY-B valve pit and a diversion box due to piping system leak	Failure of primary and encasement piping due to external event (airplane crash, volcanism, etc)	SC: Pipe Encasements	AC: Encasement Seal Loops	SS: Tank Level Detect Syss SS: Salt Well Flow Totalizer	AC: Trans Cntrls (Leak Detect/Cntrl) AC: Emergency Prep (Significant Release) AC: Emergency Prep (Seismic)	Controls based on accident analyses (Subsurface Leak Resulting in Pool; and Natural Phenomena - Seismic).	S2

Table 5.4-1. Safety Structures, Systems, and Components and Technical Safety Requirements for Potential S3 and S2 Consequences. (107 Sheets)

ID	Hazardous Condition	Cause	Preventive SSCs	Preventive TSRs	Mitigative SSCs	Mitigative TSRs	Memo	Cons
W058-INTEG07a	Release of radioactive slurry to the soil surface from the underground piping between the SY-A or SY-B valve pit and a diversion box due to piping system leak	Failure of primary and encasement piping due to external event (undermining from broken fluid transfer lines in vicinity) plus mitigative features failure	SC: Pipe Encasements	AC: Encasement Seal Loops	SS: Tank Level Detect Syss SS: Salt Well Flow Totalizer	AC: Trans Cntrls (Leak Detect/Cntrl) AC: Emergency Prep (Significant Release)	Controls based on accident analysis (Subsurface Leak Resulting in Pool).	S2
W058-INTEG09a	Release of radioactive slurry to the soil surface from the underground piping between the SY-A or SY-B valve pit and a diversion box due to piping system leak	Failure of primary and encasement piping due to freezing	SC: Pipe Encasements	AC: Encasement Seal Loops	SS: Tank Level Detect Syss SS: Salt Well Flow Totalizer	AC: Trans Cntrls (Leak Detect/Cntrl) AC: Emergency Prep (Significant Release)	Controls based on accident analysis (Subsurface Leak Resulting in Pool).	S2
W058-INTEG11a	Release of radioactive slurry to the soil surface from the underground piping between the SY-A or SY-B valve pit and a diversion box due to piping system leak	Failure of primary and encasement piping due to seismic event plus mitigative features failure	SC: Pipe Encasements	AC: Encasement Seal Loops	SS: Tank Level Detect Syss SS: Salt Well Flow Totalizer	AC: Trans Cntrls (Leak Detect/Cntrl) AC: Emergency Prep (Significant Release) AC: Emergency Prep (Seismic)	Controls based on accident analyses (Subsurface Leak Resulting in Pool; and Natural Phenomena - Seismic).	S2
W058-INTEG13a	Release of radioactive supernate to the soil surface from the underground piping between the SY-A or SY-B valve pit and a diversion box due to piping system leak	Failure of primary and encasement piping due to corrosion plus mitigative features failure	SC: Pipe Encasements	AC: Encasement Seal Loops	SS: Tank Level Detect Syss SS: Salt Well Flow Totalizer	AC: Trans Cntrls (Leak Detect/Cntrl) AC: Emergency Prep (Significant Release)	Controls based on accident analysis (Subsurface Leak Resulting in Pool).	S2
W058-INTEG13b	Release of radioactive supernate to the soil surface from the underground piping between the SY-A or SY-B valve pit and a diversion box due to piping system leak	Failure of primary and encasement piping due to unrecognized material flaw plus mitigative features failure	SC: Pipe Encasements	AC: Encasement Seal Loops	SS: Tank Level Detect Syss SS: Salt Well Flow Totalizer	AC: Trans Cntrls (Leak Detect/Cntrl) AC: Emergency Prep (Significant Release)	Controls based on accident analysis (Subsurface Leak Resulting in Pool).	S2

Table 5.4-1. Safety Structures, Systems, and Components and Technical Safety Requirements for Potential S3 and S2 Consequences. (107 Sheets)

ID	Hazardous Condition	Cause	Preventive SSCs	Preventive TSRs	Mitigative SSCs	Mitigative TSRs	Memo	Cons
W058-INTEG14a	Release of radioactive supernate to the soil surface from the underground piping between the SY-A or SY-B valve pit and a diversion box due to piping system leak	Failure of primary and encasement piping due to external event (airplane crash, volcanism, etc) plus mitigative features failure	SC: Pipe Encasements	AC: Encasement Seal Loops	SS: Tank Level Detect Syss SS: Salt Well Flow Totalizer	AC: Trans Cntrls (Leak Detect/Cntrl) AC: Emergency Prep (Significant Release) AC: Emergency Prep (Seismic)	Controls based on accident analyses (Subsurface Leak Resulting in Pool; and Natural Phenomena - Seismic).	S2
W058-INTEG18a	Release of radioactive supernate to the soil surface from the underground piping between the SY-A or SY-B valve pit and a diversion box due to piping system leak	Failure of primary and encasement piping due to external event (undermining from broken fluid transfer lines in vicinity) plus mitigative features failure	SC: Pipe Encasements	AC: Encasement Seal Loops	SS: Tank Level Detect Syss SS: Salt Well Flow Totalizer	AC: Trans Cntrls (Leak Detect/Cntrl) AC: Emergency Prep (Significant Release)	Controls based on accident analysis (Subsurface Leak Resulting in Pool).	S2
W058-INTEG20a	Release of radioactive supernate to the soil surface from the underground piping between the SY-A or SY-B valve pit and a diversion box due to piping system leak	Failure of primary and encasement piping due to freezing	SC: Pipe Encasements	AC: Encasement Seal Loops	SS: Tank Level Detect Syss SS: Salt Well Flow Totalizer	AC: Trans Cntrls (Leak Detect/Cntrl) AC: Emergency Prep (Significant Release)	Controls based on accident analysis (Subsurface Leak Resulting in Pool).	S2
W058-INTEG22	Release of radioactive supernate to the soil surface from the underground piping between the SY-A or SY-B valve pit and a diversion box due to piping system leak	Failure of primary and encasement piping due to seismic event plus mitigative features failure	SC: Pipe Encasements	AC: Encasement Seal Loops	SS: Tank Level Detect Syss SS: Salt Well Flow Totalizer	AC: Trans Cntrls (Leak Detect/Cntrl) AC: Emergency Prep (Significant Release) AC: Emergency Prep (Seismic) AC: Emergency Prep	Controls based on accident analyses (Subsurface Leak Resulting in Pool; and Natural Phenomena - Seismic).	S2

Table 5.4-1. Safety Structures, Systems, and Components and Technical Safety Requirements for Potential S3 and S2 Consequences. (107 Sheets)

ID	Hazardous Condition	Cause	Preventive SSCs	Preventive TSRs	Mitigative SSCs	Mitigative TSRs	Memo	Cons
XS-01-PRES01	Release of liquid radioactive waste from damaged transfer piping to 244 TX DCRT due to over pressure (pool)	Use of wrong size pump and closed valve causes over pressure and subsequent pipe failure	SC: Pipe Encasements	AC: Encasement Seal Loops	SS: Tank Level Detect Syss SS: Salt Well Flow Totalizer	AC: Trans Cntrls (Leak Detect/Cntrl) AC: Emergency Prep (Significant Release)	Controls based on accident analysis (Subsurface Leak Resulting in Pool).	S2
XS-02-FLOW05	Release of liquid radioactive waste to the soil from PFP transfer piping due to pipe break	Pipe break from various causes	SC: Pipe Encasements	AC: Trans Cntrls (Mis-routing) AC: Encasement Seal Loops	SS: Tank Level Detect Syss SS: Salt Well Flow Totalizer	AC: Trans Cntrls (Leak Detect/Cntrl) AC: Emergency Prep (Significant Release)	Controls based on accident analysis (Subsurface Leak Resulting in Pool).	S2
XS-06-FLOW05	Release of waste from transfer pipe out of 244 TX DCRT to the soil due to flow path to soil	Concurrent failure of transfer piping and encasement	SC: Pipe Encasements	AC: Trans Cntrls (Mis-routing) AC: Encasement Seal Loops	SS: Tank Level Detect Syss SS: Salt Well Flow Totalizer	AC: Trans Cntrls (Leak Detect/Cntrl) AC: Emergency Prep (Significant Release)	Controls based on accident analysis (Subsurface Leak Resulting in Pool).	S2
XS-07-FLOW01	Release of radioactive waste to soil from transfer piping out of 244 TX DCRT due to leak in primary pipe and encasement	Excavation accident fails primary pipe and encasement	None required	AC: Excavation Cntrls	None required	None required	Controls based on accident analysis (Spray Leak from Underground Waste Transfer Lines).	S2
XS-07-FLOW03	Release of radioactive waste to soil from transfer pipe out of 244 TX DCRT due to leak in primary pipe and encasement	High structural loading from traffic or cranes cause failure of primary pipe and encasement	None required	None required	None required	None required	No controls required based on low accident frequency.	S2

Table 5.4-1. Safety Structures, Systems, and Components and Technical Safety Requirements for Potential S3 and S2 Consequences. (107 Sheets)

ID	Hazardous Condition	Cause	Preventive SSCs	Preventive TSRs	Mitigative SSCs	Mitigative TSRs	Memo	Cons
XS-07-FLOW04	Release of radioactive waste to soil from transfer piping of 244 TX-DCRT due to leak in primary pipe and encasement	Seismic event fails primary pipe and encasement	SC: Pipe Encasements	AC: Encasement Seal Loops	SS: Tank Level Detect Syss SS: Salt Well Flow Totalizer	AC: Trans Cntrls (Leak Detect/Cntrl) AC: Emergency Prep (Significant Release) AC: Emergency Prep (Seismic)	Controls based on accident analyses (Subsurface Leak Resulting in Pool; Natural Phenomena - Seismic).	S2
XS-07-FLOW05	Release of radioactive waste to soil from transfer pipe out of 244 TX DCRT due to leak in primary pipe and encasement	Undermining due to leak of nearby pipes cause failure of primary pipe and encasement	SC: Pipe Encasements	AC: Encasement Seal Loops	SS: Tank Level Detect Syss SS: Salt Well Flow Totalizer	AC: Trans Cntrls (Leak Detect/Cntrl) AC: Emergency Prep (Significant Release)	Controls based on accident analysis (Subsurface Leak Resulting in Pool).	S2
XS-52-FLOW01	Release of radioactive waste to surface from transfer piping to Tank 244-CR-003 due to leak (pool)	Failure of pipe from various causes	SC: Pipe Encasements	AC: Trans Cntrls (Mis-routing) AC: Encasement Seal Loops	SS: Tank Level Detect Syss SS: Salt Well Flow Totalizer	AC: Trans Cntrls (Leak Detect/Cntrl) AC: Emergency Prep (Significant Release)	Controls based on accident analysis (Subsurface Leak Resulting in Pool).	S2
SPRAY LEAK IN STRUCTURE OR FROM OVERGROUND WASTE TRANSFER LINES (Section 5.3.2.20)								
XS-06-FLOW02	Release of liquid radioactive waste from DCRT transfer piping to Tank 241-SY-102 due to spray leak in DCRT pump pit	Pipe failure in DCRT pump pit causing spray leak	None required	AC: Trans Cntrls (Mis-routing) AC: Trans Pump Admin Lock Cntrls	SC: Trans Sys Cvrs	LCO: Trans Sys Cvrs AC: Trans Sys Cvr Removal Cntrls	Controls based on accident analysis (Spray Leak in Structure or from Overground Waste Transfer Lines).	S3
102AW-01-FLOW 102AW-04-PRES	Release of radioactive aerosol from transfer pipe which runs from DCRT to Tank 241-AW-102 due to spray leak into open underground structure	Piping leak due to thermal stress of transferring hot solution in cold pipe	None required	AC: Trans Cntrls (Mis-routing) AC: Trans Pump Admin Lock Cntrls	SC: Trans Sys Cvrs	LCO: Trans Sys Cvrs AC: Trans Sys Cvr Removal Cntrls	Controls based on accident analysis (Spray Leak in Structure or from Overground Waste Transfer Lines).	S3

Table 5.4-1. Safety Structures, Systems, and Components and Technical Safety Requirements for Potential S3 and S2 Consequences. (107 Sheets)

ID	Hazardous Condition	Cause	Preventive SSCs	Preventive TSRs	Mitigative SSCs	Mitigative TSRs	Memo	Cons
102AW-01-FLOW01	Release of liquid radioactive waste aerosols from transfer pipe to Tank 241-AW-102 due to spray leak into open underground structure	Piping leak due to corrosion caused by transferring high temperature waste	None required	AC: Trans Cntrls (Mis-routing) AC: Trans Pump Admin Lock Cntrls	SC: Trans Sys Cvrs	LCO: Trans Sys Cvrs AC: Trans Sys Cvr Removal Cntrls	Controls based on accident analysis (Spray Leak in Structure or from Overground Waste Transfer Lines).	S3
102AW-13-FLOW01	Release of radioactive waste aerosols due to spray leak of waste from flush pit	Backflow of waste to flush pit with valve or pipe leak and cover block off	SC: Pressure Switch Interlocks or Alarms (Water Service Lines) SS: Backflow Prevention Devices	LCO: Service Water Pressure Detect Syss AC: Trans Pump Admin Lock Cntrls AC: Trans Cntrls (Mis-routing)	SC: Trans Sys Cvrs	LCO: Trans Sys Cvrs AC: Trans Sys Cvr Removal Cntrls	Controls based on accident analysis (Spray Leak in Structure or from Overground Waste Transfer Lines).	S3
204AR-07A	Release of liquid radioactive waste and high airborne in unloading room from the Tank 241-AY-102 due to reverse pumping of Tank 241-AY-102 contents back to 204-AR	Pump in pit 02D starts and pumps back to the 204-AR building through the transfer piping and leaks	None required	AC: Trans Pump Admin Lock Cntrls AC: Trans Cntrls (Mis-routing)	SC: 204-AR CAM Interlock SS: 204-AR Building	LCO: Ventilation Stack CAM Interlock Syss	Controls based on accident analysis (Spray Leak in Structure or from Overground Waste Transfer Lines) with additional controls to address 204-AR spray leaks.	S2
COB-01	Release of radioactive and/or hazardous material from COB due to spray leak	Flange, gasket or valve, spray leak with COB lid removed	None required	AC: Trans Pump Admin Lock Cntrls AC: Trans Cntrls (Mis-routing)	SC: Trans Sys Cvrs	LCO: Trans Sys Cvrs AC: Trans Sys Cvr Removal Cntrls	Controls based on accident analysis (Spray Leak in Structure or from Overground Waste Transfer Lines).	S3
I-222S-1-CMP-C	Release (potential spray leak) of 222-S lab waste to atmosphere in diversion box or 244-S Pump Pit due to increased corrosion from failure to add sodium hydroxide	Human error - failure to add sodium hydroxide	None required	AC: Trans Cntrls (Waste Compatibility) AC: Trans Pump Admin Lock Cntrls	SC: Trans Sys Cvrs	LCO: Trans Sys Cvrs AC: Trans Sys Cvr Removal Cntrls	Controls based on accident analysis (Spray Leak in Structure or from Overground Waste Transfer Lines); and Mixing of Incompatible Material - Tank Pressurization.	S2
I-222S-2-LEK-B	Release of 222-S lab waste to the atmosphere due to spray leak at the diversion box or pump pit, caused by corrosion in the pipe	Corrosion in pipe line	None required	AC: Trans Cntrls (Mis-routing) AC: Trans Pump Admin Lock Cntrls	SC: Trans Sys Cvrs	LCO: Trans Sys Cvrs AC: Trans Sys Cvr Removal Cntrls	Controls based on accident analysis (Spray Leak in Structure or from Overground Waste Transfer Lines).	S2

Table 5.4-1. Safety Structures, Systems, and Components and Technical Safety Requirements for Potential S3 and S2 Consequences. (107 Sheets)

ID	Hazardous Condition	Cause	Preventive SSCs	Preventive TSRs	Mitigative SSCs	Mitigative TSRs	Memo	Cons
I-222S-2-LEK-E	Release of 222-S lab waste to the atmosphere due to spray leak at the diversion box or pump pit, caused by rupture at pipe connections from a seismic event	Seismic event	None required	AC: Trans Pump Admin Lock Cntrls	SC: Trans Sys Cvrs	LCO: Trans Sys Cvrs AC: Trans Sys Cvr Removal Cntrls AC: Emergency Prep (Seismic)	Controls based on accident analyses (Spray Leak in Structure or from Overground Waste Transfer Lines; and Natural Phenomena - Seismic).	S2
I-242A-1-LEK-B	Release of waste from Feed Tank 241-AW-102 to the atmosphere due to spray leak at the diversion box or pump pit, caused by corrosion in the pipe	Corrosion in pipe line	None required	AC: Trans Pump Admin Lock Cntrls AC: Trans Cntrls (Mis-routing)	SC: Trans Sys Cvrs	LCO: Trans Sys Cvrs AC: Trans Sys Cvr Removal Cntrls	Controls based on accident analysis (Spray Leak from Underground Waste Transfer Lines).	S2
I-242A-1-LEK-E	Release of waste from Feed Tank 241-AW-102 to the atmosphere due to spray leak at the diversion box or pump pit, caused by rupture at pipe connections	Seismic event causes spray leak	None required	AC: Trans Pump Admin Lock Cntrls	SC: Trans Sys Cvrs	LCO: Trans Sys Cvrs AC: Trans Sys Cvr Removal Cntrls AC: Emergency Prep (Seismic)	Controls based on accident analyses (Spray Leak in Structure or from Overground Waste Transfer Lines; and Natural Phenomena - Seismic).	S2
I-242A-2-LEK-B	Release of slurry tank waste to the atmosphere due to spray leak at the diversion boxes or pump pit, caused by corrosion in the pipe	Corrosion in pipe line	None required	AC: Trans Pump Admin Lock Cntrls AC: Trans Cntrls (Mis-routing)	SC: Trans Sys Cvrs	LCO: Trans Sys Cvrs AC: Trans Sys Cvr Removal Cntrls	Controls based on accident analysis (Spray Leak from Underground Waste Transfer Lines).	S2
I-242A-2-LEK-E	Release of slurry tank waste to the atmosphere due to spray leak at the diversion box or pump pit, caused by rupture at pipe connections	Seismic event causes leak	None required	AC: Trans Pump Admin Lock Cntrls	SC: Trans Sys Cvrs	LCO: Trans Sys Cvrs AC: Trans Sys Cvr Removal Cntrls AC: Emergency Prep (Seismic)	Controls based on accident analyses (Spray Leak in Structure or from Overground Waste Transfer Lines; and Natural Phenomena - Seismic).	S2

Table 5.4-1. Safety Structures, Systems, and Components and Technical Safety Requirements for Potential S3 and S2 Consequences. (107 Sheets)

ID	Hazardous Condition	Cause	Preventive SSCs	Preventive TSRs	Mitigative SSCs	Mitigative TSRs	Memo	Cons
I-242S-2-LEK-B	Release of contaminated water to the atmosphere due to spray leak at the diversion box or pump pit, caused by corrosion in the pipe	Corrosion in pipe line causes spray leak	None required	AC: Trans Pump Admin Lock Cntrls AC: Trans Cntrls (Mis-routing)	SC: Trans Sys Cvrs	LCO: Trans Sys Cvrs AC: Trans Sys Cvr Removal Cntrls	Controls based on accident analysis (Spray Leak from Underground Waste Transfer Lines).	S2
I-242S-2-LEK-E	Release of contaminated water to the atmosphere due to spray leak at the diversion box or pump pit, caused by rupture at pipe connections from seismic event	Seismic event	None required	AC: Trans Pump Admin Lock Cntrls	SC: Trans Sys Cvrs	LCO: Trans Sys Cvrs AC: Trans Sys Cvr Removal Cntrls AC: Emergency Prep (Seismic)	Controls based on accident analyses (Spray Leak in Structure or from Overground Waste Transfer Lines; and Natural Phenomena - Seismic).	S2
I-242S-4-LEK-E	Release of contaminated water to the atmosphere due to spray leak at the diversion box or pump pit, caused by rupture at pipe connections from an seismic event	Seismic event causes spray leak	None required	AC: Trans Pump Admin Lock Cntrls	SC: Trans Sys Cvrs	LCO: Trans Sys Cvrs AC: Trans Sys Cvr Removal Cntrls AC: Emergency Prep (Seismic)	Controls based on accident analyses (Spray Leak in Structure or from Overground Waste Transfer Lines; and Natural Phenomena - Seismic).	S2
I-BPLANT-1-CMP-B	Release (spray leak) of low level waste at diversion box from transfer of low pH material resulting in increased corrosion in pipe	Human error - failure to add sodium hydroxide leads to corrosion and leak in pipe	None required	AC: Trans Cntrls (Waste Compatibility) AC: Trans Pump Admin Lock Cntrls	SC: Trans Sys Cvrs	LCO: Trans Sys Cvrs AC: Trans Sys Cvr Removal Cntrls	Controls based on accident analyses (Spray Leak in Structure or from Overground Waste Transfer Lines; and Mixing of Incompatible Material - Tank Pressurization).	S2
I-BPLANT-2-LEK-B	Release of low level waste to the atmosphere due to spray leak at the diversion box or pump pit, caused by corrosion in the pipe	Corrosion in pipe line causes spray leak	None required	AC: Trans Pump Admin Lock Cntrls AC: Trans Cntrls (Mis-routing)	SC: Trans Sys Cvrs	LCO: Trans Sys Cvrs AC: Trans Sys Cvr Removal Cntrls	Controls based on accident analysis (Spray Leak from Underground Waste Transfer Lines).	S2

Table 5.4-1. Safety Structures, Systems, and Components and Technical Safety Requirements for Potential S3 and S2 Consequences. (107 Sheets)

ID	Hazardous Condition	Cause	Preventive SSCs	Preventive TSRs	Mitigative SSCs	Mitigative TSRs	Memo	Cons
I-BPLANT-2-LEK-E	Release of low level waste to the atmosphere due to spray leak at the diversion box or pump pit, caused by rupture at pipe connections from seismic event	Seismic event causes spray leak	None required	AC: Trans Pump Admin Lock Cntrls	SC: Trans Sys Cvrs	LCO: Trans Sys Cvrs AC: Trans Sys Cvr Removal Cntrls AC: Emergency Prep (Seismic)	Controls based on accident analyses (Spray Leak in Structure or from Overground Waste Transfer Lines; and Natural Phenomena - Seismic).	S2
I-PFP-2-LEK-B	Release of TRU mixed waste to the atmosphere due to spray leak at the diversion box or pump pit, caused by corrosion in the pipe	Corrosion in pipe line causes spray leak	None required	AC: Trans Pump Admin Lock Cntrls AC: Trans Cntrls (Mis-routing)	SC: Trans Sys Cvrs	LCO: Trans Sys Cvrs AC: Trans Sys Cvr Removal Cntrls	Controls based on accident analysis (Spray Leak from Underground Waste Transfer Lines).	S2
I-PFP-2-LEK-E	Release of TRU mixed waste to the atmosphere due to spray leak at the diversion box or pump pit, caused by rupture at pipe connections	Seismic event causes spray leak.	None required	AC: Trans Pump Admin Lock Cntrls	SC: Trans Sys Cvrs	LCO: Trans Sys Cvrs AC: Trans Sys Cvr Removal Cntrls AC: Emergency Prep (Seismic)	Controls based on accident analyses (Spray Leak in Structure or from Overground Waste Transfer Lines; and Natural Phenomena - Seismic).	S2
I-PFP-3-LEK-B	Release of TRU mixed waste to the atmosphere due to spray leak at the diversion box or pump pit, caused by corrosion in the pipe	Corrosion in pipe line causes spray leak	None required	AC: Trans Pump Admin Lock Cntrls AC: Trans Cntrls (Mis-routing)	SC: Trans Sys Cvrs	LCO: Trans Sys Cvrs AC: Trans Sys Cvr Removal Cntrls	Controls based on accident analysis (Spray Leak from Underground Waste Transfer Lines).	S2
I-PFP-3-LEK-E	Release of TRU mixed waste to the atmosphere due to spray leak at the diversion box or pump pit, caused by rupture at pipe connections	Seismic event causes spray leak	None required	AC: Trans Pump Admin Lock Cntrls	SC: Trans Sys Cvrs	LCO: Trans Sys Cvrs AC: Trans Sys Cvr Removal Cntrls AC: Emergency Prep (Seismic)	Controls based on accident analyses (Spray Leak in Structure or from Overground Waste Transfer Lines; and Natural Phenomena - Seismic).	S2

Table 5.4-1. Safety Structures, Systems, and Components and Technical Safety Requirements for Potential S3 and S2 Consequences. (107 Sheets)

ID	Hazardous Condition	Cause	Preventive SSCs	Preventive TSRs	Mitigative SSCs	Mitigative TSRs	Memo	Cons
I-PUREX-1-AGT-B	Release (spray leak) of TRU waste from PUREX at diversion box due to leak from increased corrosion caused by transfer of acidic waste	Human error or mechanical failure - agitator fails or is not turned on	None required	AC: Trans Cntrls (Waste Compatibility) AC: Trans Pump Admin Lock Cntrls	SC: Trans Sys Cvrs	LCO: Trans Sys Cvrs AC: Trans Sys Cvr Removal Cntrls	Controls based on accident analyses (Spray Leak in Structure or from Overground Waste Transfer Lines; and Mixing of Incompatible Material - Tank Pressurization).	S2
I-PUREX-1-CMP-B	Release (spray leak) of TRU waste from PUREX at diversion box due to leak from increased corrosion caused by transfer of acidic waste	Human error - failure to add sodium hydroxide to low level waste results in corrosion and causes spray leak	None required	AC: Trans Cntrls (Waste Compatibility) AC: Trans Pump Admin Lock Cntrls	SC: Trans Sys Cvrs	LCO: Trans Sys Cvrs AC: Trans Sys Cvr Removal Cntrls	Controls based on accident analyses (Spray Leak in Structure or from Overground Waste Transfer Lines; and Mixing of Incompatible Material - Tank Pressurization).	S2
I-PUREX-2-LEK-B	Release of TRU waste from PUREX to the atmosphere due to spray leak at the diversion box or pump pit, caused by corrosion in the pipe	Corrosion in pipe line causes spray leak	None required	AC: Trans Pump Admin Lock Cntrls AC: Trans Cntrls (Mis-routing)	SC: Trans Sys Cvrs	LCO: Trans Sys Cvrs AC: Trans Sys Cvr Removal Cntrls	Controls based on accident analysis (Spray Leak from Underground Waste Transfer Lines).	S2
I-PUREX-2-LEK-E	Release of TRU waste from PUREX to the atmosphere due to spray leak at the diversion box or pump pit, caused by seismic event	Seismic event causes spray leak	None required	AC: Trans Pump Admin Lock Cntrls	SC: Trans Sys Cvrs	LCO: Trans Sys Cvrs AC: Trans Sys Cvr Removal Cntrls AC: Emergency Prep (Seismic)	Controls based on accident analyses (Spray Leak in Structure or from Overground Waste Transfer Lines; and Natural Phenomena - Seismic).	S2
I-PUREX-3-AGT-B	Release (spray leak) of TRU waste from PUREX at diversion box due to leak from increased corrosion caused by transfer of acidic waste	Agitator fails or is not turned on results in corrosion and causes spray leak	None required	AC: Trans Cntrls (Waste Compatibility) AC: Trans Pump Admin Lock Cntrls	SC: Trans Sys Cvrs	LCO: Trans Sys Cvrs AC: Trans Sys Cvr Removal Cntrls	Controls based on accident analyses (Spray Leak in Structure or from Overground Waste Transfer Lines; and Mixing of Incompatible Material - Tank Pressurization).	S2

Table 5.4-1. Safety Structures, Systems, and Components and Technical Safety Requirements for Potential S3 and S2 Consequences. (107 Sheets)

ID	Hazardous Condition	Cause	Preventive SSCs	Preventive TSRs	Mitigative SSCs	Mitigative TSRs	Memo	Cons
I-PUREX-3-CMP-B	Release (spray leak) of TRU waste from PUREX at diversion box due to leak from increased corrosion caused by transfer of acidic waste	Human error - failure to add sodium hydroxide to low level waste results in spray leak	None required	AC: Trans Pump Admin Lock Cntrls AC: Trans Cntrls (Waste compatibility)	SC: Trans Sys Cvrs	LCO: Trans Sys Cvrs AC: Trans Sys Cvr Removal Cntrls	Controls based on accident analysis (Spray Leak from Underground Waste Transfer Lines; and Mixing of Incompatible Material - Tank Pressurization).	S2
I-PUREX-4-LEK-B	Release of TRU waste from PUREX to the atmosphere due to spray leak at the diversion box or pump pit, caused by corrosion in the pipe	Corrosion in pipe line causes spray leak	None required	AC: Trans Pump Admin Lock Cntrls AC: Trans Cntrls (Mis-routing)	SC: Trans Sys Cvrs	LCO: Trans Sys Cvrs AC: Trans Sys Cvr Removal Cntrls	Controls based on accident analysis (Spray Leak from Underground Waste Transfer Lines).	S2
I-PUREX-4-LEK-E	Release of TRU waste from PUREX to the atmosphere due to spray leak at the diversion box or pump pit, caused by rupture at pipe connections from seismic event	Seismic event causes spray leak	None required	AC: Trans Pump Admin Lock Cntrls	SC: Trans Sys Cvrs	LCO: Trans Sys Cvrs AC: Trans Sys Cvr Removal Cntrls AC: Emergency Prep (Seismic)	Controls based on accident analyses (Spray Leak in Structure or from Overground Waste Transfer Lines; and Natural Phenomena - Seismic).	S2
I-TPLANT-1-CMP-B	Release (spray) of low level waste at diversion box from transfer of lower pH material resulting in increased corrosion in pipe	Human error - failure to add sodium hydroxide causes corrosion and associated spray leak	None required	AC: Trans Cntrls (Waste Compatibility) AC: Trans Pump Admin Lock Cntrls	SC: Trans Sys Cvrs	LCO: Trans Sys Cvrs AC: Trans Sys Cvr Removal Cntrls	Controls based on accident analysis (Spray Leak from Underground Waste Transfer Lines; and Mixing of Incompatible Tank Pressurization).	S2
I-TPLANT-2-LEK-B	Release of low level waste to the atmosphere due to spray leak at the diversion box or pump pit	Corrosion in pipe line causes spray leak	None required	AC: Trans Pump Admin Lock Cntrls AC: Trans Cntrls (Mis-routing)	SC: Trans Sys Cvrs	LCO: Trans Sys Cvrs AC: Trans Sys Cvr Removal Cntrls	Controls based on accident analysis (Spray Leak from Underground Waste Transfer Lines).	S2
I-TPLANT-2-LEK-E	Release of low level waste to the atmosphere due to spray leak at the diversion box or pump pit, caused by rupture at pipe connections from seismic event	Seismic event causes spray leak	None required	AC: Trans Pump Admin Lock Cntrls	SC: Trans Sys Cvrs	LCO: Trans Sys Cvrs AC: Trans Sys Cvr Removal Cntrls AC: Emergency Prep (Seismic)	Controls based on accident analyses (Spray Leak in Structure or from Overground Waste Transfer Lines; and Natural Phenomena - Seismic).	S2

Table 5.4-1. Safety Structures, Systems, and Components and Technical Safety Requirements for Potential S3 and S2 Consequences. (107 Sheets)

ID	Hazardous Condition	Cause	Preventive SSCs	Preventive TSRs	Mitigative SSCs	Mitigative TSRs	Memo	Cons
OGT-EXT3-01A	Release of radioactive or hazardous aerosols from the primary pipe due to spray leak caused by truck crash into piping system	Human error, line struck by truck	SC: OGT Concrete Shielding Sys	AC: Trans Cntrls (OGT protection) AC: Trans Pump Admin Lock Program AC: Ign Cntrls (Speed Limit)	None required	None required	Controls based on accident analyses (Spray Leak in Structure or from Overground Waste Trans Lines; and In-Tank Fuel Fire/Deflagration).	S3
OGT-FLOW1-03A	Release of radioactive or hazardous aerosols from the primary pipe due to spray leak caused by misdirected flow	Spray leak caused by JR-1 (3-way valve) mispositioned to flush, two check valves fail, flush disconnect fails (check valve), reverse flow to external flush fixture and release to the environment	SC: Pressure Switch Interlocks or Alarms (Water Service Lines)	LCO: Service Water Pressure Detect Syss AC: Trans Cntrls (Mis-routing) AC: Trans Pump Admin Lock Cntrls	None required	None required	Controls based on accident analysis (Spray Leak in Structure or from Overground Waste Transfer Lines).	S3
OGT-FLOW2-02	Release of radioactive or hazardous aerosols from the primary pipe due spray leak caused by over-rated pump	Installation of incorrect pump and failure of inner pipe, failure of weld on flange of outer pipe, isolation valves closed on secondary pipe drains and no concrete shield in place	SC: OGT Concrete Shielding Sys	AC: Encasement Seal Loops AC: Trans Cntrls (OGT protection) AC: Trans Pump Admin Lock Cntrls	SC: Trans Sys Cvrs SC: OGT Encasement and Connections	LCO: Trans Sys Cvrs AC: Trans Sys Cvr Removal Cntrls	Controls based on accident analysis (Spray Leak in Structure or from Overground Waste Transfer Lines).	S3
OGT-NP3-01	Release of radioactive or hazardous aerosols from the primary pipe due spray leak caused by seismic event	Failure of line and concrete shielding during seismic event	None required	None required	SC: OGT Encasement and Connections	AC: Emergency Prep (Seismic)	Controls based on accident analysis (Natural Phenomena - Seismic) and seismic qualification of OGT Encasement and Connections.	S3
OGT-NP3-02	Release of radioactive or hazardous aerosols from the primary pipe due to leak caused by high wind	Pipe is blown off supports and no concrete shielding in place	None required	None required	SC: OGT Encasement and Connections	None required	Controls based on qualification of OGT Encasement and Connections for high winds.	S3

Table 5.4-1. Safety Structures, Systems, and Components and Technical Safety Requirements for Potential S3 and S2 Consequences. (107 Sheets)

ID	Hazardous Condition	Cause	Preventive SSCs	Preventive TSRs	Mitigative SSCs	Mitigative TSRs	Memo	Cons
OGT-TEMP1-02	Release of radioactive or hazardous vapors/aerosols from the primary pipe due to spray leak caused by high temperatures	Vehicle accident above ground starts fire, melt the EPDM hose causing a leak to secondary pipe, pumping occurring, fire fails gasket and facilitates a release to atmosphere	SC: OGT Concrete Shielding Sys	AC: Trans Cntrls (OGT protection) AC: Ign Cntrls (Speed Limit)	None required	None required	Controls based on accident analyses (Spray Leak in Structure or from Overground Waste Transfer Lines; and In-Tank Fuel Fire/ Deflagration).	S2
W058-FLOW15	Release of radioactive slurry aerosols to the atmosphere caused by spray leak of slurry from the SY-A or SY-B valve pit due to piping system leak	Computer failure or human error causing misrouting of material when flow path is not completely connected	None required	AC: Trans Pump Admin Lock Cntrls AC: Trans Cntrls (Mis-routing)	SC: Trans Sys Cvrs	LCO: Trans Sys Cvrs AC: Trans Sys Cvr Removal Cntrls	Controls based on accident analysis (Spray Leak in Structure or from Overground Waste Transfer Lines).	S3
W058-FLOW16	Release of radioactive slurry aerosols to the atmosphere caused by spray leak of slurry from the SY-A or SY-B valve pit due to piping system leak	External leak of valve or valves to the valve pit	None required	AC: Trans Pump Admin Lock Cntrls	SC: Trans Sys Cvrs	LCO: Trans Sys Cvrs AC: Trans Sys Cvr Removal Cntrls	Controls based on accident analysis (Spray Leak in Structure or from Overground Waste Transfer Lines).	S3
W058-FLOW17a	Release of radioactive slurry aerosols to the atmosphere caused by spray leak of slurry from the SY-A or SY-B valve pit due to piping system leak	Failure of jumper due to misalignment (human error) plus mitigative features failure	None required	AC: Trans Pump Admin Lock Cntrls	SC: Trans Sys Cvrs	LCO: Trans Sys Cvrs AC: Trans Sys Cvr Removal Cntrls	Controls based on accident analysis (Spray Leak in Structure or from Overground Waste Transfer Lines).	S3
W058-FLOW17b	Release of radioactive slurry aerosols to the atmosphere caused by spray leak of slurry from the SY-A or SY-B valve pit due to piping system leak	Failure of jumper due to gasket failure plus mitigative features failure	None required	AC: Trans Pump Admin Lock Cntrls	SC: Trans Sys Cvrs	LCO: Trans Sys Cvrs AC: Trans Sys Cvr Removal Cntrls	Controls based on accident analysis (Spray Leak in Structure or from Overground Waste Transfer Lines).	S3
W058-FLOW17c	Release of radioactive slurry aerosols to the atmosphere caused by spray leak of slurry from the SY-A or SY-B valve pit due to piping system leak	Failure of jumper due to corrosion plus mitigative features failure	None required	AC: Trans Pump Admin Lock Cntrls	SC: Trans Sys Cvrs	LCO: Trans Sys Cvrs AC: Trans Sys Cvr Removal Cntrls	Controls based on accident analysis (Spray Leak in Structure or from Overground Waste Transfer Lines).	S3

Table 5.4-1. Safety Structures, Systems, and Components and Technical Safety Requirements for Potential S3 and S2 Consequences. (107 Sheets)

ID	Hazardous Condition	Cause	Preventive SSCs	Preventive TSRs	Mitigative SSCs	Mitigative TSRs	Memo	Cons
W058-FLOW18	Release of radioactive supernate aerosols to the atmosphere caused by spray leak of supernate from the SY-A or SY-B valve pit due to piping system leak	Computer failure or human error causing misrouting of material when flow path is not completely connected	None required	AC: Trans Pump Admin Lock Cntrls AC: Trans Cntrls (Mis-routing)	SC: Trans Sys Cvrs	LCO: Trans Sys Cvrs AC: Trans Sys Cvr Removal Cntrls	Controls based on accident analysis (Spray Leak in Structure or from Overground Waste Transfer Lines).	S3
W058-FLOW19	Release of radioactive supernate aerosols to the atmosphere caused by spray leak of supernate from the SY-A or SY-B valve pit due to piping system leak	External leak of valve or valves to the valve pit plus mitigative features failure	None required	AC: Trans Pump Admin Lock Cntrls	SC: Trans Sys Cvrs	LCO: Trans Sys Cvrs AC: Trans Sys Cvr Removal Cntrls	Controls based on accident analysis (Spray Leak in Structure or from Overground Waste Transfer Lines).	S3
W058-FLOW20a	Release of radioactive supernate aerosols to the atmosphere caused by spray leak of supernate from the SY-A or SY-B valve pit due to piping system leak	Failure of jumper due to misalignment (human error) plus mitigative features failure	None required	AC: Trans Pump Admin Lock Cntrls	SC: Trans Sys Cvrs	LCO: Trans Sys Cvrs AC: Trans Sys Cvr Removal Cntrls	Controls based on accident analysis (Spray Leak in Structure or from Overground Waste Transfer Lines).	S3
W058-FLOW20b	Release of radioactive supernate aerosols to the atmosphere caused by spray leak of supernate from the SY-A or SY-B valve pit due to piping system leak	Failure of jumper due to gasket failure plus mitigative features failure	None required	AC: Trans Pump Admin Lock Cntrls	SC: Trans Sys Cvrs	LCO: Trans Sys Cvrs AC: Trans Sys Cvr Removal Cntrls	Controls based on accident analysis (Spray Leak in Structure or from Overground Waste Transfer Lines).	S3
W058-FLOW20c	Release of radioactive supernate aerosols to the atmosphere caused by spray leak of supernate from the SY-A or SY-B valve pit due to piping system leak	Failure of jumper due to corrosion plus mitigative features failure	None required	AC: Trans Pump Admin Lock Cntrls	SC: Trans Sys Cvrs	LCO: Trans Sys Cvrs AC: Trans Sys Cvr Removal Cntrls	Controls based on accident analysis (Spray Leak in Structure or from Overground Waste Transfer Lines).	S3
W058-INTEG32	Release of radioactive supernate or slurry aerosols to the atmosphere due to a spray leak from test risers located near SY-A and SY-B valve pits	Failure of primary piping and path for spray leak from test riser plus mitigative features failure	None required	AC: Encasement Seal Loops AC: Trans Pump Admin Lock Cntrls AC: Trans Cntrls (Mis-routing)	None required	None required	Controls based on accident analysis (Spray Leak in Structure or from Overground Waste Transfer Lines).	S3

Table 5.4-1. Safety Structures, Systems, and Components and Technical Safety Requirements for Potential S3 and S2 Consequences. (107 Sheets)

ID	Hazardous Condition	Cause	Preventive SSCs	Preventive TSRs	Mitigative SSCs	Mitigative TSRs	Memo	Cons
W058-INTEG34	Release of radioactive slurry aerosols to the atmosphere caused by spray leak of slurry from the SY-A or SY-B valve pit due to piping system leak	External event (airplane crash, etc)	None required	None required	None required	None required	No controls required based on low accident frequency.	S3
W058-INTEG35	Release of radioactive slurry aerosols to the atmosphere caused by spray leak of slurry from the SY-A or SY-B valve pit due to piping system leak	Seismic event	None required	AC: Trans Cntrls (Mis-routing) AC: Trans Pump Admin Lock Cntrls	SC: Trans Sys Cvrs	LCO: Trans Sys Cvrs AC: Trans Sys Cvr Removal Cntrls AC: Emergency Prep (Seismic)	Controls based on accident analyses (Spray Leak in Structure or from Overground Waste Transfer Lines; and Natural Phenomena - Seismic).	S3
W058-INTEG36	Release of radioactive supernate aerosols to the atmosphere caused by spray leak of supernate from the SY-A or SY-B valve pit due to piping system leak	External event (airplane crash, etc)	None required	None required	None required	None required	No controls required based on low accident frequency.	S3
W058-INTEG37	Release of radioactive supernate aerosols to the atmosphere caused by spray leak of supernate from the SY-A or SY-B valve pit due to piping system leak	Seismic event	None required	AC: Trans Pump Admin Lock Cntrls	SC: Trans Sys Cvrs	LCO: Trans Sys Cvrs AC: Trans Sys Cvr Removal Cntrls AC: Emergency Prep (Seismic)	Controls based on accident analyses (Spray Leak in Structure or from Overground Waste Transfer Lines; and Natural Phenomena - Seismic).	S3
XS-01-TEMP01	Release of steam-aerosol from transfer piping in pump pit due to steam hammer and resulting pipe damage	Extended recirculation and consequential heating of saltwell liquid with sudden opening of valve when cover block is open	None required	AC: Trans Pump Admin Lock Cntrls AC: Trans Cntrls (Mis-routing)	SC: Trans Sys Cvrs	LCO: Trans Sys Cvrs AC: Trans Sys Cvr Removal Cntrls	Controls based on accident analysis (Spray Leak in Structure or from Overground Waste Transfer Lines).	S2

Table 5.4-1. Safety Structures, Systems, and Components and Technical Safety Requirements for Potential S3 and S2 Consequences. (107 Sheets)

ID	Hazardous Condition	Cause	Preventive SSCs	Preventive TSRs	Mitigative SSCs	Mitigative TSRs	Memo	Cons
XS-06-FLOW03	Release of liquid radioactive waste from transfer piping from PFP to DCRT due to spray leak in DCRT pump pit	Pipe failure in DCRT pump pit causing spray leak	None required	AC: Trans Pump Admin Lock Cntrls AC: Trans Cntrls (Mis-routing)	SC: Trans Sys Cvrs	LCO: Trans Sys Cvrs AC: Trans Sys Cvr Removal Cntrls	Controls based on accident analysis (Spray Leak in Structure or from Overground Waste Transfer Lines).	S3
XS-06-FLOW04	Release of liquid radioactive waste from transfer piping from an SST to a DCRT due to spray leak (SPUTTER) of saltwell liquor from DCRT pump pit	Pipe failure	None required	AC: Trans Pump Admin Lock Cntrls	SC: Trans Sys Cvrs	LCO: Trans Sys Cvrs AC: Trans Sys Cvr Removal Cntrls	Controls based on accident analysis (Spray Leak in Structure or from Overground Waste Transfer Lines).	S2
SPRAY LEAK FROM UNDERGROUND WASTE TRANSFER LINES (Section 5.3.2.21)								
EE-16	Release of radioactive and hazardous material from transfer line spray leak due to excavation error	Excavation into waste transfer line during a transfer	None required	AC: Excavation Cntrls	None required	None required	Controls based on accident analysis (Spray Leak from Underground Waste Transfer Lines).	S3
102AW-01-TEMP	Release of liquid radioactive waste aerosols from transfer pipe to Tank 241-AW-102 due to spray leak of liquid waste from transfer pipe leak	Piping leak due to exceeding the design temperature of the pipe by transferring high temperature waste	None required	AC: Trans Cntrls (Mis-routing) AC: Trans Pump Admin Lock Cntrls	SC: Trans Sys Cvrs	LCO: Trans Sys Cvrs AC: Trans Sys Cvr Removal Cntrls	Controls based on accident analysis (Spray Leak in Structure or from Overground Waste Transfer Lines).	S3
CP-RMV-03	Release of radioactive or toxic material from transfer line through the push pipe during removal activities	Human error	None required	AC: Excavation Cntrls	None required	None required	Controls based on accident analysis (Spray Leak from Underground Waste Transfer Lines).	S3
I-222S-2-LEK-C	Release of 222-S lab waste to the atmosphere due to spray leak at the rupture of the line	Inadvertent excavation of line	None required	AC: Excavation Cntrls	None required	None required	Controls based on accident analysis (Spray Leak from Underground Waste Transfer Lines).	S2
I-242A-1-LEK-C	Release of waste from Feed Tank 241-AW-102 to the atmosphere due to spray leak at the rupture of the line	Inadvertent excavation of line causes spray leak	None required	AC: Excavation Cntrls	None required	None required	Controls based on accident analysis (Spray Leak from Underground Waste Transfer Lines).	S2

Table 5.4-1. Safety Structures, Systems, and Components and Technical Safety Requirements for Potential S3 and S2 Consequences. (107 Sheets)

ID	Hazardous Condition	Cause	Preventive SSCs	Preventive TSRs	Mitigative SSCs	Mitigative TSRs	Memo	Cons
I-242A-2-LEK-C	Release of slurry tank waste to the atmosphere due to spray leak at the rupture of the line	Inadvertent excavation of line causes spray leak	None required	None required	None required	None required	Controls based on accident analysis (Spray Leak from Underground Waste Transfer Lines).	S2
I-242S-2-LEK-C	Release of contaminated water to the atmosphere due to spray leak at the rupture of the line from excavation	Inadvertent excavation of line causes spray leak	None required	AC: Excavation Cntrls	None required	None required	Controls based on accident analysis (Spray Leak from Underground Waste Transfer Lines).	S2
I-BPLANT-2-LEK-C	Release of low level waste to the atmosphere due to spray leak at the rupture of the line from excavation	Inadvertent excavation of line causes spray leak	None required	AC: Excavation Cntrls	None required	None required	Controls based on accident analysis (Spray Leak from Underground Waste Transfer Lines).	S2
I-PFP-2-LEK-C	Release of TRU mixed waste to the atmosphere due to spray leak at the rupture of the line	Inadvertent excavation of line	None required	AC: Excavation Cntrls	None required	None required	Controls based on accident analysis (Spray Leak from Underground Waste Transfer Lines).	S2
I-PFP-3-LEK-C	Release of TRU mixed waste to the atmosphere due to spray leak at the rupture of the line	Inadvertent excavation of line	None required	AC: Excavation Cntrls	None required	None required	Controls based on accident analysis (Spray Leak from Underground Waste Transfer Lines).	S2
I-PUREX-2-LEK-C	Release of TRU waste from PUREX to the atmosphere due to spray leak at the rupture of the line from inadvertent excavation	Inadvertent excavation of line causes spray leak	None required	AC: Excavation Cntrls	None required	None required	Controls based on accident analysis (Spray Leak from Underground Waste Transfer Lines).	S2
I-PUREX-4-LEK-C	Release of TRU waste from PUREX to the atmosphere due to spray leak at the rupture of the line from excavation	Inadvertent excavation of line causes spray leak	None required	AC: Excavation Cntrls	None required	None required	Controls based on accident analysis (Spray Leak from Underground Waste Transfer Lines).	S2
I-TPLANT-2-LEK-C	Release of low level waste to the atmosphere due to spray leak at the rupture of the line from excavation	Inadvertent excavation of line causes spray leak	None required	AC: Excavation Cntrls	None required	None required	Controls based on accident analysis (Spray Leak from Underground Waste Transfer Lines).	S2
NP-08	Radioactive and hazardous material releases from transfer pipes due to seismic event (possible spray leak)	Seismic event shears pipes and encasements during transfer	None required	None required	None required	AC: Emergency Prep (Seismic)	Controls based on accident analysis (Natural Phenomena - Seismic).	S3

Table 5.4-1. Safety Structures, Systems, and Components and Technical Safety Requirements for Potential S3 and S2 Consequences. (107 Sheets)

ID	Hazardous Condition	Cause	Preventive SSCs	Preventive TSRs	Mitigative SSCs	Mitigative TSRs	Memo	Cons
TANK BUMP (Section 5.3.2.22)								
102AW-02-TEMP02	Release of radioactive aerosols from Tank 241-AW-102 due to tank bump	High heat waste combined with loss of ventilation contributes to tank bump	SS: Temperature Mon Sys SS: Tank Level Detect Sys	LCO: DST and AWF Tanks Waste Temperature Cntrls AC: Trans Cntrls (Waste Compatibility) AC: Process Instrumentation and Measuring and Test Equipment	None required	None required	Controls based on accident analysis (Tank Bump).	S2
102AW-09-TEMP01	Release of radioactive aerosols from Tank 241-AW-102 atmosphere due to tank bump	High heat waste plus loss of cooling and/or mixing pump (not yet installed) operation	SS: Temperature Mon Sys SS: Tank Level Detect Sys	LCO: DST and AWF Tanks Waste Temperature Cntrls AC: Trans Cntrls (Waste Compatibility) AC: Process Instrumentation and Measuring and Test Equipment	None required	None required	Controls based on accident analysis (Tank Bump).	S2
114SX-05.b.2	Release of radioactive aerosols from Tank 241-SX-114 head space to atmosphere due to sudden flashing of water added to tank for cooling	Flashing (adding cold liquid to hot tank contents)	None required	None required	None required	None required	No controls required based on low accident frequency.	S2
XS-26-TEMP01	Release of radioactive aerosols from Tank 241-AW-102 due to tank bump	High heat waste plus loss of cooling contributes to tank bump	SS: Temperature Mon Sys SS: Tank Level Detect Sys	LCO: SST Waste Temperature Cntrls LCO: DST and AWF Tanks Waste Temperature Cntrls AC: Trans Cntrls	None required	None required	Controls based on accident analysis (Tank Bump).	S2
WASTE TRANSPORT VEHICLE ACCIDENT (Section 5.3.2.23)								
VEH-03	Release of radioactive or toxic material from cask due to damage to transport casks during a high wind/tornado	High wind/tornado	None required	None required	None required	None required	None (All control activity deferred to packaging safety analyses).	S2
VEH-02	Release of radioactive or toxic material from cask due to damage to transport casks during seismic event	Seismic event	None required	None required	None required	None required	None (All control activity deferred to packaging safety analyses).	S2

Table 5.4-1. Safety Structures, Systems, and Components and Technical Safety Requirements for Potential S3 and S2 Consequences. (107 Sheets)

ID	Hazardous Condition	Cause	Preventive SSCs	Preventive TSRs	Mitigative SSCs	Mitigative TSRs	Memo	Cons
VEH-02-I	Release of radioactive or toxic material from MISF samples in transport casks due to seismic damage	Seismic event	None required	None required	None required	None required	None (All control activity deferred to packaging safety analyses).	S2
VEH-03-I	Release of radioactive or toxic material from MISF samples in transport casks due to high wind/ tornado damage	High wind/tornado	None required	None required	None required	None required	None (All control activity deferred to packaging safety analyses).	S2
NATURAL PHENOMENA - HIGH WIND (Section 5.3.2.23)								
CRN-13-a	Release of radioactive or toxic material from tank/equipment damage and dome collapse due to boom failure	High wind	None required	AC: Dome Loading Cntrls (High Wind)	None required	None required	Controls base on accident analysis (Natural Phenomena - High Wind).	S3
CRN-13-IA	Release of radioactive and/or toxic materials from below ground facility due to containment top collapse or equipment damage by boom failure	High wind or seismic event	None required	AC: Dome Loading Cntrls (High Wind)	None required	AC: Emergency Prep (Seismic)	Controls base on accident analyses (Natural Phenomena - High Wind; and Natural Phenomena - Seismic).	S2
CRN-13-IC	Release of radioactive and/or toxic materials from facility due to containment top collapse damage by boom failure	High wind or seismic event	None required	AC: Dome Loading Cntrls (High Wind)	None required	AC: Emergency Prep (Seismic)	Controls base on accident analyses (Natural Phenomena - High Wind; and Natural Phenomena - Seismic).	S2
CRN-23	Release of radioactive or toxic materials from tank due to loss of vertical load control, dropping crane load into tank, onto tank bottom (subsurface leak)	High wind or seismic event	None required	AC: Dome Loading Cntrls (High Wind)	None required	AC: Emergency Prep (Seismic)	Controls base on accident analyses (Natural Phenomena - High Wind; and Natural Phenomena - Seismic).	S2
CRN-23-IA	Release of radioactive or toxic materials from underground facility bottom due to loss of vertical load control, dropping crane load into facility (subsurface leak)	High wind or seismic event	None required	AC: Dome Loading Cntrls (High Wind)	None required	AC: Emergency Prep (Seismic)	Controls base on accident analyses (Natural Phenomena - High Wind; and Natural Phenomena - Seismic).	S2

Table 5.4-1. Safety Structures, Systems, and Components and Technical Safety Requirements for Potential S3 and S2 Consequences. (107 Sheets)

ID	Hazardous Condition	Cause	Preventive SSCs	Preventive TSRs	Mitigative SSCs	Mitigative TSRs	Memo	Cons
ABOVE GROUND STRUCTURE FAILURE (Section 5.3.2.23)								
ITK-FR-08	Release of radioactive aerosols/vapors from flex receiver due to structural failure	High winds tear flex receiver bag	None required	None required	None required	None required	No controls required based on accident analysis (Above Ground Structure Failure).	S2
CRN-11-IB	Release of radioactive and/or toxic materials from facility due to equipment damage by boom failure	Human error: improper load assembly, rigging, crane overloaded	None required	None required	None required	None required	No controls required based on accident analysis (Above Ground Structure Failure).	S2
CRN-12-IB	Release of radioactive and/or toxic materials from facility due to equipment damage by boom failure	Mechanical failure: corrosion, faulty materials	None required	None required	None required	None required	No controls required based on accident analysis (Above Ground Structure Failure).	S2
CRN-13-IB	Release of radioactive and/or toxic materials from above ground facility due to equipment damage by boom failure	High wind or seismic event	None required	None required	None required	None required	No controls required based on accident analysis (Above Ground Structure Failure).	S2
CRN-18	Release of radioactive or toxic material from above ground tank equipment due to dropping crane load	Human error: improper load assembly, rigging, crane overloaded	None required	None required	None required	None required	No controls required based on accident analysis (Above Ground Structure Failure).	S2
CRN-18-I	Release of radioactive or toxic material from aboveground facility equipment due to dropping crane load	Human error: improper load assembly, rigging, crane overloaded	None required	None required	None required	None required	No controls required based on accident analysis (Above Ground Structure Failure).	S2
CRN-19-I	Release of radioactive or toxic material from aboveground facility equipment due to dropping crane load	Mechanical failure: corrosion, faulty materials	None required	None required	None required	None required	No controls required based on accident analysis (Above Ground Structure Failure).	S2
CRN-20-I	Release of radioactive or toxic material from aboveground facility equipment due to dropping crane load	High wind or seismic event	None required	None required	None required	None required	No controls required based on accident analysis (Above Ground Structure Failure).	S2

Table 5.4-1. Safety Structures, Systems, and Components and Technical Safety Requirements for Potential S3 and S2 Consequences. (107 Sheets)

ID	Hazardous Condition	Cause	Preventive SSCs	Preventive TSRs	Mitigative SSCs	Mitigative TSRs	Memo	Cons
CRN-23-IB	Release of radioactive or toxic materials from aboveground facility bottom due to loss of vertical load control, dropping crane load into facility	High wind or seismic event	None required	None required	None required	None required	No controls required based on accident analysis (Above Ground Structure Failure).	S2
CRN-25-IB	Release of radioactive or toxic material from aboveground MISF due to swinging load into equipment caused by loss of lateral load control	Human error: improper load assembly, rigging, positioning error	None required	None required	None required	None required	No controls required based on accident analysis (Above Ground Structure Failure).	S2
CRN-26-IB	Release of radioactive or toxic material from aboveground MISF due to swinging load into equipment caused by loss of lateral load control	Mechanical failure: corrosion, faulty materials, hydraulics, outriggers in soft soil	None required	None required	None required	None required	No controls required based on accident analysis (Above Ground Structure Failure).	S2
CRN-27-IB	Release of radioactive or toxic material from aboveground MISF due to swinging load into equipment caused by loss of lateral load control	Mechanical failure: corrosion, faulty materials, hydraulics, outriggers in soft soil	None required	None required	None required	None required	No controls required based on accident analysis (Above Ground Structure Failure).	S2
ITK-FR-03	Release of radioactive aerosols from tank and/or receiver due to equipment jam in riser	Equipment becomes lodged in riser, efforts to remove pull riser out of tank causing breach of tank & receiver containment	None required	None required	None required	None required	No controls required based on accident analysis (Above Ground Structure Failure).	S2
ITK-FR-22	Release of radioactive aerosols from flex receiver due to tank gas release	Tank gas release pressurizes bag and causes bag to rupture	None required	None required	None required	None required	No controls required based on accident analysis (Above Ground Structure Failure).	S2
LDUA 5-40	Release of contamination from TRIC and tank riser due to damage during wind storm	High winds	None required	None required	None required	None required	No controls required based on accident analysis (Above Ground Structure Failure).	S2

Table 5.4-1. Safety Structures, Systems, and Components and Technical Safety Requirements for Potential S3 and S2 Consequences. (107 Sheets)

ID	Hazardous Condition	Cause	Preventive SSCs	Preventive TSRs	Mitigative SSCs	Mitigative TSRs	Memo	Cons
NP-05	Radioactive and hazardous material release from tanks, nearby ground surfaces, and ventilation systems due to above grade disturbances	High winds	None required	None required	None required	None required	No controls required based on accident analysis (Above Ground Structure Failure).	S2
NATURAL PHENOMENA - LIGHTNING (Section 5.3.2.23)								
NP-03	Radioactive and hazardous material releases from tanks due to fire in tanks	Lightning strikes riser in tank farm	None required	AC: Ign Cntrls (Lightning)	None required	None required	Controls based on accident analysis (Natural Phenomena - Lightning).	S2
EE-01	Release of radioactive and toxic materials from tanks due to external force and fire	Aircraft crash	None required	None required	None required	None required	No controls required based on low accident frequency.	S3
ITK-11-I	Release of radioactive or toxic material from facility due to in-facility fire or explosion during intrusive activity	Lightning, range fire, or seismic event ignites facility vapors	None required	AC: Ign Cntrls (Lightning)	None required	AC: Emergency Prep (Seismic)	Controls based on accident analyses (Natural Phenomena - Lightning; and Natural Phenomena - Seismic).	S2
LDUA 5-43	Release of aerosolized waste to the atmosphere from headspace of single shell tank due to ignition of flammable gas	Lightning strikes VPM in raised position	None required	AC: Ign Cntrls (Lightning)	None required	None required	Controls based on analyzed accident Natural Phenomena - Lightning.	S3
NP-11	Radioactive and hazardous material releases from tank farms due to lava flow	Eruption of molten lava from fissures	None required	None required	None required	None required	No controls required based on low accident frequency.	S3
NATURAL PHENOMENA - SEISMIC EVENTS (Section 5.3.2.23)								
NP-07	Radioactive and hazardous material releases from tanks and ventilation systems due to seismic event	Seismic event collapses domes	None required	None required	None required	AC: Emergency Prep (Seismic)	Controls based on accident analysis (Natural Phenomena - Seismic).	S3
102S-05.a2	Release of radioactive aerosols from Tank 241-S-102 to atmosphere due to dome collapse	Seismic event (common mode failure)	None required	None required	None required	AC: Emergency Prep (Seismic)	Controls based on accident analysis (Natural Phenomena - Seismic).	S3

Table 5.4-1. Safety Structures, Systems, and Components and Technical Safety Requirements for Potential S3 and S2 Consequences. (107 Sheets)

ID	Hazardous Condition	Cause	Preventive SSCs	Preventive TSRs	Mitigative SSCs	Mitigative TSRs	Memo	Cons
114SX-04.b.1.b.2b	Release of radioactive aerosols to atmosphere from Tank 241-SX-114 waste due to heat induced tank dome collapse	Ducting failure due to seismic activity coupled with failure to respond Resulting in tank degradation	None required	None required	None required	AC: Emergency Prep (Seismic)	Controls based on accident analysis (Natural Phenomena - Seismic).	S3
244AR-02.a.14	Release of radioactive aerosols from waste contained in tanks (4) and building due to earthquake	Seismic event collapses building and four tanks	None required	None required	None required	AC: Emergency Prep (Seismic)	Controls based on accident analysis (Natural Phenomena - Seismic).	S3
244AR-05.a.02	Release of radioactive material from facility due to seismic event which causes building collapse without cell collapse	Seismic event damages facility structure	None required	None required	None required	AC: Emergency Prep (Seismic)	Controls based on accident analysis (Natural Phenomena - Seismic).	S2
CCF-18	Release of radioactive and hazardous materials from tanks due to dome collapses	Fire in tank propagates to connecting tank and both tanks collapse during cooldown from negative tank pressure	None required	None required	None required	None required	No controls required based on accident analysis (Organic Solvent Fire/Organic Salt-Nitrate Reaction) which shows that tank will not collapse.	S3
CCF-19	Release of radioactive and hazardous materials from tanks due to dome collapses	Fire in tank causes pressure transient that leads to GRE in connecting tank with subsequent fire and tank collapses from negative tank pressure	None required	None required	None required	None required	No controls required based on extremely low accident frequency.	S3
CRN-13-b	Release of radioactive or toxic material from tank/equipment damage and dome collapse due to boom failure	Seismic event	None required	None required	None required	AC: Emergency Prep (Seismic)	Controls based on accident analysis (Natural Phenomena - Seismic).	S3

Table 5.4-1. Safety Structures, Systems, and Components and Technical Safety Requirements for Potential S3 and S2 Consequences. (107 Sheets)

ID	Hazardous Condition	Cause	Preventive SSCs	Preventive TSRs	Mitigative SSCs	Mitigative TSRs	Memo	Cons
NP-13	Radioactive and hazardous material releases from tanks due to excessive weight on dome	Accumulations of heavy snow followed by heavy rain	None required	None required	None required	None required	No controls required based on accident analysis (Tank Failure Due to Excessive Loads).	S3

Table 5.4-2. Safety Structures, Systems, and Components and Technical Safety Requirements for Potential S1 Consequences with F3 Frequency. (47 Sheets)

ID	Hazardous Condition	Cause	Preventive SSCs	Preventive TSRs	Mitigative SSCs	Mitigative TSRs	Memo
ABBREVIATION LIST: Admin = Administrative Cons = Consequence Cntrls = Controls Detect = Detection Ign = Ignition Mon = Monitoring Prep = Preparedness Sys = Systems Trans = Transfer TSR = Technical Safety Requirement							
102AW-02-LEVE	Release of radioactive aerosols from Tank 241-AW-102 annulus due to the presence of radioactive liquid waste in Tank 241-AW-102 annulus	Primary tank leakage from various causes	None	None	SC: Primary Tank Leak Detect Syss SS: HEPA Filters	LCO: Primary Tank Leak Detect Syss	These controls address this hazardous condition by indicating leak and minimizing release.
102AW-02-LEVE02A	Release of radioactive aerosols from Tank 241-AW-102 annulus ventilation system due to the presence of radioactive liquid waste in the annulus	Mis-routing of transfer to annulus instead of primary tank	None	AC: Trans Cntrls (Mis-routing)	SS: HEPA Filters SC: Primary Tank Leak Detect Syss	LCO: Primary Tank Leak Detect Syss	These controls address this hazardous condition by indicating mis-transfer and minimizing exposure.
102AW-04-LEVE01	Release of radioactive aerosols from Tank 241-AW-102 central pump pit due to accumulation of radioactive liquids in the central pump pit	Leak of primary piping	None	None	SC: Trans Sys Cvrs SC: Trans Leak Detect Syss	LCO: Trans Sys Cvrs LCO: Trans Leak Detect Syss AC: Trans Cntrls (Mis-routing) AC: Trans Pump Admin Lock Cntrls AC: Trans Sys Cvr Removal Cntrls	These controls address this hazardous condition by indicating leak and minimizing releases.
102AW-04-LEVE02	Release of radioactive aerosols from Tank 241-AW-102 central pump pit due to accumulation of radioactive liquids in the central pump pit	Misrouting through an open jumper plus clogged drain	None	AC: Trans Cntrls (Leak Prevention/ Detect/Cntrl)	SC: Trans Leak Detect Syss SC: Trans Sys Cvrs	LCO: Trans Sys Cvrs AC: Trans Cntrls (Leak Prevention/ Detect/Cntrl) AC: Trans Pump Admin Lock Cntrls	These controls address this hazardous condition by indicating leak and minimizing exposure.
102AW-04-LEVE03	Release of radioactive aerosols from Tank 241-AW-102 central pump pit due to accumulation of radioactive liquids in the central pump pit	Dissolution of residual contamination in central pump pit caused by erroneous use of raw water	None	None	None	None	No applicable SSCs or TSRs - Facility worker exposure controlled by Radiation Protection Program.
102AW-04-LEVE04	Release of radioactive aerosols from Tank 241-AW-102 central pump pit due to accumulation of radioactive liquids in the central pump pit	Dissolution of residual contamination in central pump pit caused by pit cleaning plus clogged drain	None	None	None	None	No applicable SSCs or TSRs - Facility worker exposure controlled by Radiation Protection Program.

Table 5.4-2. Safety Structures, Systems, and Components and Technical Safety Requirements for Potential S1 Consequences with F3 Frequency. (47 Sheets)

ID	Hazardous Condition	Cause	Preventive SSCs	Preventive TSRs	Mitigative SSCs	Mitigative TSRs	Memo
102AW-04-PRES01	Release of radioactive particulate from Tank 241-AW-102 central pump pit due to pressurization	Loss of primary tank ventilation causes pressurization of pump pit.	SC: DST/AWF Ventilation	LCO: DST and AWF Tank Ventilation Syss AC: Flammability Cntrls (Pressurization)	SC: Trans Sys Cvrs	LCO: Trans Sys Cvrs AC: Trans Sys Cvr Removal Cntrls	These controls address this hazardous condition by monitoring ventilation operation and cover block status.
102AW-04-PRES02	Release of radioactive particulate from Tank 241-AW-102 central pump pit due to its being open to atmosphere	Removal of cover block	None	None	SC: DST/AWF Ventilation	LCO: DST and AWF Tank Ventilation Syss	These controls address this hazardous condition by minimizing release.
102AW-08-COMP06	Release of toxic gases from Tank 241-AW-102 tank vapor space due to production and migration of toxic gases from sludge	Chemical reactions in waste causes production of toxic gases	None	None	None	None	No applicable SSCs or TSRs - Facility worker exposure controlled by Health & Safety Plan.
102AW-09-COMP03	Release of toxic vapors from a separable organic layer in Tank 241-AW-102 due to fuel spill into tank	External event (fuel spill)	None	AC: Ign Cntrls (Vehicles)	None	None	This control addresses this hazardous condition by preventing fuel spill.
102AW-09-COMP04	Release of toxic vapors from a separable organic layer in Tank 241-AW-102	Core sampling (NPH) releases trapped vapors	None	None	None	None	No applicable SSCs or TSRs - Facility worker exposure controlled by Health & Safety Plan.
102AW-09-COMP05	Release of toxic vapors from a separable organic layer in Tank 241-AW-102 due to error in transfer	Generator erroneous transfer of insoluble organic material	None	AC: Trans Cntrls (Organic Solvent)	None	None	This control addresses this hazardous condition by preventing mis-transfers.
102S-02.d3	Release of radioactive aerosols to atmosphere from Tank 241-S-102 pit due to burning fuel on top of pit caused by ignition of gas from ruptured gas tank.	Vehicle drives into pit cover puncturing gas tank + Ignition	None	AC: Ign Cntrls (Vehicles)	None	AC: Emergency Prep (Fire in Contaminated Area)	These controls address this hazardous condition by preventing fuel spill and minimizing exposure.
102S-06.a	Release of radioactive aerosols from Tank 241-S-102 vapor space to atmosphere due to ventilation system failure	Filter plugged	None	AC: HEPA Filter Cntrl (Filter Efficiency)	None	AC: HEPA Filter Cntrls (Source Term)	These controls address this hazardous condition by limiting source buildup.

Table 5.4-2. Safety Structures, Systems, and Components and Technical Safety Requirements for Potential S1 Consequences with F3 Frequency. (47 Sheets)

ID	Hazardous Condition	Cause	Preventive SSCs	Preventive TSRs	Mitigative SSCs	Mitigative TSRs	Memo
106C-01K	Release of radioactive and/or hazardous material from Tank 241-C-106 tank due to high temperature	Water evaporation	SC: SST Ventilation SS: Temperature Mon	LCO: SST Ventilation Syss LCO: SST Waste Temperature Cntrls	SS: Ventilation Sys CAM Interlock	LCO: Ventilation Stack CAM Interlock Syss AC: HEPA Filter Cntrls (Source Term)	These controls address this hazardous condition by maintaining tank vacuum, monitoring tank temp and CAM interlock mitigating releases.
106C-01S	Release of radioactive and/or hazardous material from Tank 241-C-106 caused by low level in waste tank due to high temperature	Water evaporation	SC: SST Ventilation SS: Temperature Mon	LCO: SST Ventilation Syss LCO: SST Waste Temperature Cntrls	SS: Ventilation Sys CAM Interlock	LCO: Ventilation Stack CAM Interlock Syss AC: HEPA Filter Cntrls (Source Term)	These controls address this hazardous condition by maintaining tank vacuum, monitoring tank temp and CAM interlock mitigating releases.
106C-01Sa	Release of radioactive and/or hazardous material from Tank 241-C-106, due to low tank level because of tank leak	Waste tank leak	SS: Temperature Mon	LCO: SST Waste Temperature Cntrls	SS: Tank Level Detect Sys SS: Temperature Mon	LCO: SST Waste Temperature Cntrls	These are applicable controls from the Tank Bump accident analysis. Temperature monitoring prevents one possible tank failure cause and is a possible indicator of tank leak (tank heat-up). Facility worker exposure controlled by Radiation Protection Program.
106C-01T	Release of radioactive and/or hazardous material from Tank 241-C-106 due to low level in waste tank	Failure to add water to tank	SC: SST Ventilation	LCO: SST Ventilation Syss	None	AC: HEPA Filter Cntrls (Source Term)	These controls address the hazardous condition by maintaining tank vacuum.
106C-06A	Release of radioactive and/or hazardous material from Tank 241-C-106 pump pit, due to pump pit being opened to atmosphere	Cover blocks removed	None	None	SC: SST Ventilation	LCO: SST Ventilation Syss	These controls address this hazardous condition by minimizing release.

Table 5.4-2. Safety Structures, Systems, and Components and Technical Safety Requirements for Potential S1 Consequences with F3 Frequency. (47 Sheets)

ID	Hazardous Condition	Cause	Preventive SSCs	Preventive TSRs	Mitigative SSCs	Mitigative TSRs	Memo
106C-06F	Release (minor) of radioactive and/or hazardous material from Tank 241-C-106 pump pit, due to pump pit high level	Plugged pit drain while adding water	None	None	None	None	No applicable SSCs or TSRs - Facility worker exposure controlled by Radiation Protection Program.
106C-06G	Release (minor) of radioactive and/or hazardous material from Tank 241-C-106 pump pit due to pump pit high level	Plugged pit drain with rain or snow melt intrusion	SC: Trans Leak Detect Syss	LCO: Trans Leak Detect Syss AC: Trans Pump Admin Lock Cntrls AC: Trans Cntrls (Leak Prevention/ Detect/Cntrl)	None	None	These controls address this hazardous condition by notifying personnel of leak.
106C-06H	Release (minor) of radioactive and/or hazardous material from Tank 241-C-106 pump pit due to pump pit high level	Plugged pit drain during pit cleaning, cover blocks are off	None	None	None	None	No applicable SSCs or TSRs - Facility worker exposure controlled by Radiation Protection Program.
106C-06K	Release of radioactive and/or hazardous material from Tank 241-C-106 pump pit due to decreased pump pit structural integrity caused by drop	Equipment drop during crane work	None	AC: Dome Loading Cntrls (Lifting Cntrls)	None	None	This control addresses this hazardous condition by preventing equipment drop.
106C-10F	Release of radioactive and/or hazardous material from Tank 241-C-106, potential spread of contamination due to reverse air flow if intake HEPAs damaged	Loss of tank active ventilation	SC: SST Ventilation	LCO: SST Ventilation Syss	None	AC: HEPA Filter Cntrls (Source Term)	These controls address the hazardous condition by maintaining tank vacuum.
106C-10K	Release of radioactive and/or hazardous material from Tank 241-C-106, spread of contamination, due to ventilation air intake open to atmosphere	HEPA filter breach	SC: SST Ventilation	LCO: SST Ventilation Syss	None	AC: HEPA Filter Cntrls (Source Term)	These controls address the hazardous condition by maintaining tank vacuum.
106C-10L	Release of radioactive and/or hazardous material from Tank 241-C-106, spread of contamination, due to ventilation air intake open to atmosphere	Air intake ductwork damaged	SC: SST Ventilation	LCO: SST Ventilation Syss	None	AC: HEPA Filter Cntrls (Source Term)	These controls address the hazardous condition by maintaining tank vacuum.

Table 5.4-2. Safety Structures, Systems, and Components and Technical Safety Requirements for Potential S1 Consequences with F3 Frequency. (47 Sheets)

ID	Hazardous Condition	Cause	Preventive SSCs	Preventive TSRs	Mitigative SSCs	Mitigative TSRs	Memo
106C-11A	Release of radioactive and/or hazardous material from Tank 241-C-106, due to HEPA filter damage	HEPA filters plugged	None	None	None	AC: HEPA Filter Cntrls (Source Term)	These controls address the hazardous condition by maintaining tank vacuum.
106C-11G	Release of tank atmosphere through exhauster drain from Tank 241-C-106 due to leak or failure to add water routinely	Loss of exhauster seal pot water due to leak or failure to add water routinely	None	None	SS: Ventilation CAM Interlock Syss	LCO: Ventilation Stack CAM Interlock Syss	These controls address this hazardous condition by minimizing unfiltered releases.
106C-11H	Release of radioactive and/or hazardous material from Tank 241-C-106 due to condensate backing up into filters, de-entrainer or heater	Exhauster seal pot water freezing due to loss of heat trace	None	None	SS: Ventilation CAM Interlock Syss	LCO: Ventilation Stack CAM Interlock Syss AC: HEPA Filter Cntrls (Source Term)	These controls address this hazardous condition by minimizing filter source term accumulation, filter degradation and mitigating filter breakthrough.
106C-11I	Release of radioactive and/or hazardous material from Tank 241-C-106 due to moisture carryover into HEPAs causing loss of efficiency	Exhauster heater failure	None	None	SS: Ventilation CAM Interlock Syss	LCO: Ventilation Stack CAM Interlock Syss AC: HEPA Filter Cntrls (Source Term)	These controls address this hazardous condition by minimizing filter source term accumulation, filter degradation and mitigating filter breakthrough.
106C-11N	Release of radioactive and/or hazardous material from Tank 241-C-106, through HEPA filter path, due to filter degradation over time	HEPA filter degradation	None	None	SS: Ventilation CAM Interlock Syss	LCO: Ventilation Stack CAM Interlock Syss AC: HEPA Filter Cntrls (Source Term)	These controls address this hazardous condition by minimizing filter source term accumulation, filter degradation and mitigating filter breakthrough.

Table 5.4-2. Safety Structures, Systems, and Components and Technical Safety Requirements for Potential S1 Consequences with F3 Frequency. (47 Sheets)

ID	Hazardous Condition	Cause	Preventive SSCs	Preventive TSRs	Mitigative SSCs	Mitigative TSRs	Memo
106C-12A	Release of radioactive and/or hazardous material from Tank 241-C-106 due to tank falling below level limit, caused by excessive tank evaporation from high temperature	Pit drain plug, water addition fails	SC: SST Ventilation SS: Temperature Mon	LCO: SST Ventilation Syss LCO: SST Waste Temperature Cntrls	SS: Ventilation CAM Interlock Syss	LCO: Ventilation Stack CAM Interlock Syss AC: HEPA Filter Cntrls (Source Term)	These controls address this hazardous condition by maintaining tank vacuum, inspection of HEPA filters, and mitigating filter breakthrough.
106C-12B	Release of radioactive and/or hazardous material from Tank 241-C-106 due to low tank level	Water addition tank truck breakdown	SC: SST Ventilation SS: Temperature Mon	LCO: SST Ventilation Syss LCO: SST Waste Temperature Cntrls	SS: Ventilation CAM Interlock Syss	LCO: Ventilation Stack CAM Interlock Syss AC: HEPA Filter Cntrls (Source Term)	These controls address this hazardous condition by maintaining tank vacuum, inspection of HEPA filters, and mitigating filter breakthrough.
106C-12C	Release of radioactive and/or hazardous material from Tank 241-C-106 due to low tank level because of increased evaporation	Water addition tank truck leak	SC: SST Ventilation SS: Temperature Mon	LCO: SST Ventilation Syss LCO: SST Waste Temperature Cntrls	SS: Ventilation CAM Interlock Syss	LCO: Ventilation Stack CAM Interlock Syss AC: HEPA Filter Cntrls (Source Term)	These controls address this hazardous condition by maintaining tank vacuum, inspection of HEPA filters, and mitigating filter breakthrough.
106C-12D	Release of radioactive and/or hazardous material from Tank 241-C-106 due to excessive tank evaporation from high temperature which causes tank to fall below level limit	Tank level instrumentation fails, does not prompt water addition	SC: SST Ventilation SS: Temperature Mon	LCO: SST Ventilation Syss LCO: SST Waste Temperature Cntrls	SS: Ventilation CAM Interlock Syss	LCO: Ventilation Stack CAM Interlock Syss AC: HEPA Filter Cntrls (Source Term)	These controls address this hazardous condition by maintaining tank vacuum, inspection of HEPA filters, and mitigating filter breakthrough.
107AN-01-LEVE03	Release of caustic material from truck tank due to leak	Failure to secure truck	None	AC: Caustic Transfer Controls	None	AC: Caustic Transfer Controls	Controls based on accident analysis (Caustic Spray Leak).
107AN-03-FLOW	Release of concentrated caustic solution to surface from transfer piping due to backflow of caustic	Low temperature causes backflow	None	None	None	None	No applicable SSCs or TSRs - Facility worker exposure controlled by Health & Safety Plan.

Table 5.4-2. Safety Structures, Systems, and Components and Technical Safety Requirements for Potential S1 Consequences with F3 Frequency. (47 Sheets)

ID	Hazardous Condition	Cause	Preventive SSCs	Preventive TSRs	Mitigative SSCs	Mitigative TSRs	Memo
114SX-04.a.1a	Radioactive aerosols released from Tank 241-SX-114 head space, via tank ventilation (requires failure of outlet filter), to the atmosphere due to exhauster failure	Exhauster failure Mechanical Low temperature (thermocouple in exhaust duct not insulated picks up radiated temperature from ductwork.)	SS: Ventilation CAM Interlock Syss	LCO: Ventilation Stack CAM Interlock Syss	None	AC: HEPA Filter Cntrls (Source Term)	These controls address the hazardous condition by detecting unfiltered releases. MVS - 6/19/98 - These controls now address the hazardous condition by preventing continuing release of radioactive material if the filters fail.
114SX-04.a.1b	Radioactive aerosols released from Tank 241-SX-114 head space, via tank ventilation (requires failure of outlet filter), to the atmosphere due to exhauster failure	Filter plugged	SC: SST Ventilation	LCO: SST Ventilation Syss	None	AC: HEPA Filter Cntrls (Source Term)	These controls address the hazardous condition by maintaining tank vacuum.
114SX-04.a.4	Release of radioactive aerosols from Tank 241-SX-114 headspace to atmosphere due to inlet HEPA filter failure coupled with exhauster failure	Filter failure	None	None	None	AC: HEPA Filter Cntrls (Source Term)	MVS 6-19-98 - The control addresses the hazardous condition by limiting the source term available for release should a filter blow out.
114SX-04.b.1.a.1	Release of radioactive aerosols from Tank 241-SX-114 headspace to atmosphere due to inlet HEPA filter failure coupled with exhaust butterfly valve closure	Human error: Closure of Tank 241-SX-114 exhaust butterfly valve isolating tank from exhaust plenum	None	None	None	AC: HEPA Filter Cntrls (Source Term)	MVS 6-19-98 - The control addresses the hazardous condition by limiting the source term available for release should a filter blow out.
114SX-04.b.1.b.1a	Release radioactive aerosols released from Tank 241-SX-114 head space to the atmosphere due to ventilation system ducting failure (with failed inlet filter)	Ducting failure from bad welds	None	None	None	AC: HEPA Filter Cntrls (Source Term)	MVS 6-19-98 - The control addresses the hazardous condition by limiting the source term available for release should a filter blow out.

Table 5.4-2. Safety Structures, Systems, and Components and Technical Safety Requirements for Potential S1 Consequences with F3 Frequency. (47 Sheets)

ID	Hazardous Condition	Cause	Preventive SSCs	Preventive TSRs	Mitigative SSCs	Mitigative TSRs	Memo
114SX-04.b.1.c.1	Release of radioactive aerosols from Tank 241-SX-114 head space to atmosphere due to exhauster failure and multiple filter failure	Exhauster failure Fan failure Filter rupture (low differential pressure shutdown) Resulting in tank degradation	SC: SST Ventilation	LCO: SST Ventilation Syss	None	AC: HEPA Filter Cntrls (Source Term)	These controls address the hazardous condition by maintaining tank vacuum.
114SX-04.b.1.d.1	Release of radioactive aerosols from Tank 241-SX-114 head space to atmosphere due to exhauster filter plugging (requires failure of inlet filter)	Exhaust filter plugging plus inlet filter failure	SC: SST Ventilation	LCO: SST Ventilation Syss	None	AC: HEPA Filter Cntrls (Source Term)	These controls address the hazardous condition by maintaining tank vacuum.
114SX-04.b.5	Release of radioactive aerosols from Tank 241-SX-114 head space to atmosphere due to failure of exhauster HEPA filters	No ventilation flow High ambient temperature conditions Leading to filter failure	None	None	None	AC: HEPA Filter Cntrls (Source Term)	MVS 6-19-98 - The control addresses the hazardous condition by limiting the source term available for release should a filter blow out.
204AR-01A	Release and spread of airborne radiological contamination from the rail car due to over pressurization	Over pressure in the rail car due to chemical reaction, rupture disk fails	None	None	None	AC: Source Inventory Cntrls	This control addresses this hazardous condition by limiting exposure.
204AR-01B	Release of airborne contamination and toxic chemical exposure to worker from the rail car due to high ambient temperature	Over pressure in the rail car due to high ambient temperature, rupture disk fails	None	None	None	AC: Source Inventory Cntrls	This control addresses this hazardous condition by limiting exposure.
204AR-01C	Release of airborne contamination and toxic chemical exposure to worker from the rail car due to chemical reaction causing over pressurization	High temperature in the rail car due to chemical reaction of the rail car contents, rupture disk fails	None	None	None	AC: Source Inventory Cntrls	This control addresses this hazardous condition by limiting exposure.

Table 5.4-2. Safety Structures, Systems, and Components and Technical Safety Requirements for Potential S1 Consequences with F3 Frequency. (47 Sheets)

ID	Hazardous Condition	Cause	Preventive SSCs	Preventive TSRs	Mitigative SSCs	Mitigative TSRs	Memo
204AR-01D	Release and spread of airborne contamination and toxic chemical exposure to worker from the rail car due to leaking rail car caused by high ambient temperature and over pressurization of car tank	High ambient temperature causing pressurization of rail car and possible leakage, failed rupture disk	None	None	None	AC: Source Inventory Cntrls	This control addresses this hazardous condition by limiting exposure.
204AR-01J	Release of airborne contamination from overflowing catch tank due to overfilling through priming line	Priming line inadvertently fills up rail car and overflows rail car through its vent line to the catch tank	None	None	SC: Trans Leak Detect Syss	LCO: Trans Leak Detect Syss AC: Trans Pump Admin Lock Cntrls	These controls address this hazardous condition by indicating leakage.
204AR-01K	Release of airborne contamination from unloader room due to overflowing catch tank	During sluicing operations, fill up rail car and overflow through its vent line to the catch tank	None	None	SC: Trans Leak Detect Syss	LCO: Trans Leak Detect Syss AC: Trans Pump Admin Lock Cntrls	These controls address this hazardous condition by indicating leakage.
204AR-02E	Release of radioactive material and toxic chemicals from trailer due to damage caused by trailer jack failure	Leak from tank trailer due to trailer jack failure	None	None	SC: Trans Leak Detect Syss	LCO: Trans Leak Detect Syss AC: Trans Pump Admin Lock Cntrls AC: Source Inventory Cntrls	These controls address this hazardous condition by notifying personnel of leak.
204AR-02F	Release of airborne contamination from unloader room due to overflowing catch tank	Priming line inadvertently fills up trailer and overflows trailer through vent line to the catch tank	None	None	SC: Trans Leak Detect Syss	LCO: Trans Leak Detect Syss AC: Trans Pump Admin Lock Cntrls	These controls address this hazardous condition by indicating leakage.
204AR-03A	Release of contamination and airborne release around the catch tank area and chemical exposure in mechanical equipment room from catch tank or Sodium Nitrate Tank due to failed tank	Sodium Nitrite Tank #2 either fails or has a drain valve open and empties its contents to the floor drains in the mechanical equipment room	None	None	SC: Trans Leak Detect Syss	LCO: Trans Leak Detect Syss AC: Trans Cntrls (Leak Detect/Cntrl) AC: Trans Pump Admin Lock Cntrls	These controls address this hazardous condition by minimizing leak size.

Table 5.4-2. Safety Structures, Systems, and Components and Technical Safety Requirements for Potential S1 Consequences with F3 Frequency. (47 Sheets)

ID	Hazardous Condition	Cause	Preventive SSCs	Preventive TSRs	Mitigative SSCs	Mitigative TSRs	Memo
204AR-03B	Release of airborne contamination around the catch tank area and chemical exposure in mechanical equipment room from the Sodium Nitrite Tank #2 due to overfilling and spilling to catch tank.	Sodium Nitrite Tank #2 overfilled and contents spilled into floor drains	None	None	SC: Trans Leak Detect Syss	LCO: Trans Leak Detect Syss AC: Trans Pump Admin Lock Cntrls	These controls address this hazardous condition by indicating leakage.
204AR-04A	Release of airborne and waterborne contamination from high level in the catch tank due to Sodium Hydroxide Tank #3 failure	Sodium Hydroxide Tank #3 failure or drain valve open which empties contents into the floor drains	None	None	SC: Trans Leak Detect Syss	LCO: Trans Leak Detect Syss AC: Trans Cntrls (Leak Detect/Cntrl) AC: Trans Pump Admin Lock Cntrls	These controls address this hazardous condition by minimizing leak size.
204AR-04B	Release of airborne contamination around the catch tank area and chemical exposure in mechanical equipment room from the Sodium Hydroxide Tank #3 and catch tanks due to overfilling of the Sodium Hydroxide Tank	Sodium Hydroxide Tank #3 overfilled and contents spilled into the floor drains	None	None	SC: Trans Leak Detect Syss	LCO: Trans Leak Detect Syss AC: Trans Pump Admin Lock Cntrls	These controls address this hazardous condition by indicating leakage.
204AR-04C	Release of chemicals to the mechanical equipment room environment from the Sodium Nitrite Tank due to adding chemicals too quickly	Adding caustic chemicals too quickly to the tank - human error	None	None	None	None	No applicable SSCs or TSRs - Facility worker exposure controlled by Health & Safety Plan.
204AR-04D	Release of sodium hydroxide particulates from the Sodium Hydroxide Tank due to thermal stress to piping and eventual valve leakage of Sodium Hydroxide Tank piping	Adding too much sodium hydroxide resulting in high temperatures	None	None	None	None	No applicable SSCs or TSRs - Facility worker exposure controlled by Health & Safety Plan.
204AR-04E	Release of sodium hydroxide particulates from the Sodium Hydroxide Tank due to damage to the chemical addition pump diaphragm	Adding steam heat to the coils resulting in high temperatures	None	None	None	None	No applicable SSCs or TSRs - Facility worker exposure controlled by Health & Safety Plan.

Table 5.4-2. Safety Structures, Systems, and Components and Technical Safety Requirements for Potential S1 Consequences with F3 Frequency. (47 Sheets)

ID	Hazardous Condition	Cause	Preventive SSCs	Preventive TSRs	Mitigative SSCs	Mitigative TSRs	Memo
204AR-05B	Release of toxic chemicals and worker exposure from chemical addition piping due to over pressure of piping and subsequent damage	Over pressure while running chemical addition pump due to dead heading the pump	None	None	SC: Trans Leak Detect Syss	LCO: Trans Leak Detect Syss AC: Trans Pump Admin Lock Cntrls	These controls address this hazardous condition by indicating leakage.
204AR-06A	Release of liquid radioactive waste to the unloader room or caustic chemicals to the mechanical equipment room from the priming water piping or transfer piping due to over pressurization of piping	Raw water supply pressure higher than normal	None	None	SC: Trans Leak Detect Syss	AC: Trans Leak Detect Syss	These controls address this hazardous condition by minimizing leak.
204AR-06B	Release of liquid radioactive waste to the unloader room or caustic chemicals to the mechanical equipment room from the priming water piping or transfer piping due to over pressurization of piping	Water hammer in priming piping from raw water supply	None	None	SC: Trans Leak Detect Syss	LCO: Trans Leak Detect Syss	These controls address this hazardous condition by minimizing release.
204AR-06C	Release of airborne contamination from unloader room due to overflowing catch tank	High flow through the priming line and transfer piping due to misalignment which fills up the rail car or trailer and overflows it to the catch tank	None	None	SC: Trans Leak Detect Syss	LCO: Trans Leak Detect Syss AC: Trans Pump Admin Lock Cntrls	These controls address this hazardous condition by indicating leakage.
204AR-07B	Release of contaminated water to encasement outside of 204-AR building and floor drains inside building from the transfer piping due to over pressure and leakage from raw water flush	Over pressure of raw water through transfer piping during post transfer flush	None	None	SC: Trans Leak Detect Syss	LCO: Trans Leak Detect Syss AC: Trans Cntrls (Leak Detect/Cntrl) AC: Trans Pump Admin Lock Cntrls	These controls address this hazardous condition by minimizing leak size.

Table 5.4-2. Safety Structures, Systems, and Components and Technical Safety Requirements for Potential S1 Consequences with F3 Frequency. (47 Sheets)

ID	Hazardous Condition	Cause	Preventive SSCs	Preventive TSRs	Mitigative SSCs	Mitigative TSRs	Memo
204AR-09F	Release of airborne contamination and increased radiation levels from catch tank due to blocked catch tank ventilation and over pressure of catch tank	Ventilation to the catch tank is blocked off with heaters on, resulting in a catch tank high pressure	None	None	None	None	No applicable SSCs or TSRs - Facility worker exposure controlled by Radiation Protection Program.
204AR-11A	Release of airborne radioactivity from unloader room due to loss of confinement caused by power failure	Loss of confinement due to power failure and total loss of ventilation fan	None	None	None	None	No applicable SSCs or TSRs - Facility worker exposure controlled by Radiation Protection Program.
204AR-11B	Release of airborne radioactivity from unloader room due to loss of confinement caused by low ventilation flow	Loss of confinement due to low ventilation flow	None	None	None	None	No applicable SSCs or TSRs - Facility worker exposure controlled by Radiation Protection Program.
204AR-11C	Release of airborne contamination from the unloader room due to failure of ventilation fan	Failure of EF-1 fan resulting in loss of confinement	None	None	None	None	No applicable SSCs or TSRs - Facility worker exposure controlled by Radiation Protection Program.
204AR-11D	Release of airborne contamination from the unloader room due to blocked ventilation flow	No ventilation flow because of damper closed	None	None	None	None	No applicable SSCs or TSRs - Facility worker exposure controlled by Radiation Protection Program.
204AR-11E	Release of airborne contamination from the unloader room due to plugged ventilation flow	No ventilation flow because of plugged HEPA filter	None	None	None	AC: HEPA Filter Cntrls (Source Term)	These controls address this hazardous condition by limiting filter blowout source term.
213 W-01	Release of radioactive and/or hazardous materials in 213-W work room due to error in repackaging or instrument repair	Handling error (forklift, spills, etc)	None	None	None	None	No applicable SSCs or TSRs - Facility worker exposure controlled by Radiation Protection Program.

Table 5.4-2. Safety Structures, Systems, and Components and Technical Safety Requirements for Potential S1 Consequences with F3 Frequency. (47 Sheets)

ID	Hazardous Condition	Cause	Preventive SSCs	Preventive TSRs	Mitigative SSCs	Mitigative TSRs	Memo
213 W-02	Release of radioactive and/or hazardous materials in 213-W work room due to error in repackaging or instrument repair	Failure of tools	None	None	None	None	No applicable SSCs or TSRs - Facility worker exposure controlled by Radiation Protection Program.
213 W-09	Release of radioactive and/or toxic materials from 213-W due to structural failure of building	Loss of control of vehicle in vicinity of building	None	AC: Ign Cntrls (Vehicles)	None	None	This control addresses this hazardous condition by minimizing vehicle accidents.
244AR-01.a.03	Radioactive aerosols released from tank headspace exit building through the inlet side of the canyon ventilation system due to mechanical failure	Failure of vessel venting with open vents to cell atmosphere and jetting operations occurring plus failure of exhaust fans	None	None	None	None	No applicable SSCs or TSRs - Hazardous condition not credible for steam jetting because steam has been isolated from 244-AR.
244AR-01.b.01	Radioactive aerosols released from tank headspace and exit building through the inlet side of the canyon ventilation system due to mechanical failure	Fan Failure with jetting occurring	None	None	None	None	No applicable SSCs or TSRs - Hazardous condition not credible for steam jetting because steam has been isolated from 244-AR.
244AR-01.b.02	Radioactive aerosols released from tank headspace and exit building through the inlet side of the canyon ventilation system due to mechanical failure	HEPA filter plugged with jetting occurring	None	None	None	AC: HEPA Filter Cntrls (Source Term)	These controls address this hazardous condition by limiting filter blowout source term. Hazardous condition not credible for steam jetting because steam has been isolated from 244-AR.

Table 5.4-2. Safety Structures, Systems, and Components and Technical Safety Requirements for Potential S1 Consequences with F3 Frequency. (47 Sheets)

ID	Hazardous Condition	Cause	Preventive SSCs	Preventive TSRs	Mitigative SSCs	Mitigative TSRs	Memo
244AR-01.b.03	Radioactive aerosols released from tank headspace and exit building through the inlet side of the canyon ventilation system due to human error	Damper closed with jetting occurring	None	None	None	AC: HEPA Filter Cntrls (Source Term)	These controls address this hazardous condition by limiting filter blowout source term. Hazardous condition not credible for steam jetting because steam has been isolated from 244-AR.
244AR-01.c.01	Release of radioactive aerosols from vessel headspace into canyon atmosphere due to vessel ventilation failure	Plugged vessel ventilation system filters	None	None	None	AC: HEPA Filter Cntrls (Source Term)	These controls address this hazardous condition by limiting filter blowout source term.
244AR-01.c.02	Release of radioactive aerosols from vessel headspace into canyon atmosphere due to ventilation system failure	Vessel ventilation system fan shutdown or failure	None	None	None	None	No applicable SSCs or TSRs - Facility worker exposure controlled by Radiation Protection Program.
244AR-01.c.03	Release of radioactive aerosols from vessel headspace into canyon atmosphere due to human error	Valve closed in exhaust flow path	None	None	None	None	No applicable SSCs or TSRs - Facility worker exposure controlled by Radiation Protection Program.
244AR-01.c.08	Release of radioactive aerosols from vessel headspace into canyon atmosphere due tank rupture	Plugged tank vents with gas evolution in tank contents	SC: TK-002 244-AR level dip tube flow	LCO: 244-AR TK-002 Ventilation Sys	None	None	These controls address the hazardous condition by indicating absence of ventilation flow.
244AR-01.c.10	Release of radioactive aerosols from vessel headspace into canyon atmosphere due to plugged ventilation system	Air purge operating with ventilation system plugged	None	None	None	AC: HEPA Filter Cntrls (Source Term)	These controls address this hazardous condition by inspection of HEPA filters.
244AR-01.c.11	Release of radioactive aerosols from vessel headspace into canyon atmosphere due to ventilation system filter plugging	Air heaters off (steam supplied)	None	None	None	AC: HEPA Filter Cntrls (Source Term)	These controls address this hazardous condition by inspection of HEPA filters.

Table 5.4-2. Safety Structures, Systems, and Components and Technical Safety Requirements for Potential S1 Consequences with F3 Frequency. (47 Sheets)

ID	Hazardous Condition	Cause	Preventive SSCs	Preventive TSRs	Mitigative SSCs	Mitigative TSRs	Memo
244AR-02.a.08	Release of radioactive liquid into cells due to jumper leak causing release of aerosols through cracks	Jumper leak (general)	SC: Trans Leak Detect Syss	LCO: Trans Leak Detect Syss AC: Trans Pump Admin Lock Cntrls AC: Trans Cntrls (Leak Prevention/ Detect/Cntrl)	None	None	These controls address this hazardous condition by notifying personnel of leak.
244AR-02.a.09	Release of radioactive liquid to soil from leaking sump filled by leaking jumper	Jumper leak (general)	SC: Trans Leak Detect Syss	LCO: Trans Leak Detect Syss AC: Trans Cntrls (Leak Prevention and Mis-routing) AC: Trans Pump Admin Lock Cntrls	SS: Salt Well Flow Totalizer SC: Trans Leak Detect Sys SS: Tank Level Detect Sys	LCO: Trans Leak Detect Syss AC: Trans Cntrls (Leak Detect/Cntrl) AC: Emergency Prep (Significant Release)	These are applicable controls from the Subsurface Leak Remaining Subsurface accident analysis. These controls also address this hazardous condition for worker risk by notifying personnel of leak.
244AR-02.a.10	Release of radioactive liquid into cells due to jumper leak	Jumper (B Plant to AY Tank Farm through cell) leak	SC: Trans Leak Detect Syss	LCO: Trans Leak Detect Syss AC: Trans Pump Admin Lock Cntrls AC: Trans Cntrls (Leak Prevention/ Detect/Cntrl)	None	None	These controls address this hazardous condition by notifying personnel of leak.
244AR-02.a.11	Release of radioactive liquid to soil from leaking sump filled by leaking jumper	Jumper (B Plant to AY Tank Farm through cell) leak	SC: Trans Leak Detect Syss	LCO: Trans Leak Detect Syss AC: Trans Cntrls (Leak Prevention and Mis-routing) AC: Trans Pump Admin Lock Cntrls	SS: Salt Well Flow Totalizer SC: Trans Leak Detect Sys SS: Tank Level Detect Sys	LCO: Trans Leak Detect Syss AC: Trans Cntrls (Leak Detect/Cntrl) AC: Emergency Prep (Significant Release)	These are applicable controls from the Subsurface Leak Remaining Subsurface accident analysis. These controls also address this hazardous condition for worker risk by notifying personnel of leak.
244AR-02.a.12	Release of radioactive liquid into cells due to tank leak	Tank leak	None	None	None	None	No applicable SSCs or TSRs - Facility worker exposure controlled by Radiation Protection Program.

Table 5.4-2. Safety Structures, Systems, and Components and Technical Safety Requirements for Potential S1 Consequences with F3 Frequency. (47 Sheets)

ID	Hazardous Condition	Cause	Preventive SSCs	Preventive TSRs	Mitigative SSCs	Mitigative TSRs	Memo
244AR-03.a.06	Release of radioactive aerosols from tanks headspace due to steam pressure control failure for jetting system	Jetting operation with failure of jetting steam pressure regulation	None	None	None	None	No applicable SSCs or TSRs - Hazardous condition not credible for steam jetting because steam has been isolated from 244-AR.
244AR-03.a.13	Release of radioactive aerosol being jetted from tank or sump due to overflow into sump	Jetting activities moving material from sump or another tank	None	None	None	None	No applicable SSCs or TSRs - Hazardous condition not credible for steam jetting because steam has been isolated from 244-AR.
244AR-03.a.14	Release of radioactive liquid being jetted from tank or sump due to overflow of tank	Inter-facility tank transfers	None	None	None	None	No applicable SSCs or TSRs - Hazardous condition not credible for steam jetting because steam has been isolated from 244-AR.
244AR-07.a.02	Radioactive contamination back flow into steam system due to steam supply failure	Steam supply failure	None	None	None	None	No applicable SSCs or TSRs - Hazardous condition not credible for steam jetting because steam has been isolated from 244-AR.
244AR-07.a.03	Radioactive contamination back flow into steam system due to compressed air failure	Steam supply failure and air blow failure	None	None	None	None	No applicable SSCs or TSRs - Hazardous condition not credible for steam jetting because steam has been isolated from 244-AR.
244AR-07.a.04	Exposure to low concentrations of radioactive material	Excess water used in steam jet flush	None	None	None	None	No applicable SSCs or TSRs - Facility worker exposure controlled by Radiation Protection Program.

Table 5.4-2. Safety Structures, Systems, and Components and Technical Safety Requirements for Potential S1 Consequences with F3 Frequency. (47 Sheets)

ID	Hazardous Condition	Cause	Preventive SSCs	Preventive TSRs	Mitigative SSCs	Mitigative TSRs	Memo
90D-01	Release of radioactive and toxic aerosols/ vapors from 90 Day Storage Pad due to container breach	Container breach from internal chemical, thermal or radiolysis reactions; corrosion, freeze-thaw cycles	None	None	None	AC: Emergency Prep (Significant Release)	This control addresses this hazardous condition by minimizing personnel exposure.
90D-02	Release of radioactive and toxic aerosols/ vapors from 90 Day Storage Pad due to container breach	Container breach from external impact from handling error, forklift, handling equipment airborne missile from wind, seismic	None	None	None	AC: Emergency Prep (Seismic)	This control addresses this hazardous condition by minimizing personnel exposure.
90D-03	Release of radioactive and toxic aerosols/ vapors from 90 Day. Storage Pad due to container breach	Container breach from airborne missile from wind, or from a seismic event	None	None	None	AC: Emergency Prep (Seismic)	This control addresses this hazardous condition by minimizing personnel exposure.
90D-04	Release of radioactive and toxic aerosols/ vapors from 90 Day Storage Pad due to fire or explosion	Waste ignition from spontaneous combustion, incompatible wastes, heat from sun, waste handling or other human activities	None	None	None	AC: Emergency Prep (Fire)	This control addresses this hazardous condition by minimizing personnel exposure.
90D-06	Release of radioactive and toxic aerosols/ vapors from Intermediate Holding Area due to container breach	Container breach from internal chemical, thermal or radiolysis reactions; corrosion, freeze-thaw cycles	None	None	None	AC: Emergency Prep (Significant Release)	This control addresses this hazardous condition by minimizing personnel exposure.
90D-07	Release of radioactive and toxic aerosols/ vapors from Intermediate Holding Area due to container breach	Container breach from external impact from handling error, forklift, handling equipment airborne missile from wind, seismic	None	None	None	AC: Emergency Prep (Seismic)	This control addresses this hazardous condition by minimizing personnel exposure.
90D-08	Release of radioactive and toxic aerosols/ vapors from Intermediate Holding Area due to container breach	Container breach from airborne missile from wind, or from a seismic event	None	None	None	AC: Emergency Prep (Seismic)	This control addresses this hazardous condition by minimizing personnel exposure.

Table 5.4-2. Safety Structures, Systems, and Components and Technical Safety Requirements for Potential S1 Consequences with F3 Frequency. (47 Sheets)

ID	Hazardous Condition	Cause	Preventive SSCs	Preventive TSRs	Mitigative SSCs	Mitigative TSRs	Memo
90D-11	Release of radioactive and toxic aerosols/ vapors from waste transport vehicle due to loss of waste confinement	Failure to secure waste, vehicle accident, improper packaging, waste reactions	None	None	None	AC: Emergency Prep (Significant Release)	This is controlled by the SARP.
CCF-02	Radioactive and hazardous release from tanks due to short term loss of ventilation	Loss of offsite power	None	AC: HEPA Filter Cntrls (Filter Efficiency 244-S, TX, and A only)	None	AC: HEPA Filter Cntrls (Source Term)	These controls address this hazardous condition by inspection of HEPA filters.
CCF-03	Degraded ventilation performance at 702-A due to condensed water vapors on HEPAs	Sustained loss of water supply (month)	None	None	SS: Ventilation CAM Interlock Syss	LCO: Ventilation Stack CAM Interlock Syss AC: HEPA Filter Cntrls (Source Term)	These controls address this hazardous condition by minimizing filter source term accumulation, filter degradation and mitigating filter breakthrough.
CCF-04	Degraded ventilation performance at 702-A due to condensed water vapors on HEPAs	Sustained loss of steam supply	None	None	SS: Ventilation CAM Interlock Syss	LCO: Ventilation Stack CAM Interlock Syss AC: HEPA Filter Cntrls (Source Term)	These controls address this hazardous condition by minimizing filter source term accumulation, filter degradation and mitigating filter breakthrough.
CCF-16	Subsurface releases of radioactive or hazardous material due to leaks in multiple tanks	Tanks, tank penetrations and tank components deteriorate due to corrosion	SC: Temperature Mon	LCO: SST Waste Temperature Cntrols AC: Trans Cntrls (pH)	SC: Primary Tank Leak Detect SS: Tank Level Detect Sys SC: Temperature Mon	LCO: Primary Tank Leak Detect Syss LCO: SST Waste Temperature Cntrls	These are applicable controls from the Flammable Gas Deflagrations - DST accident analysis. Temperature monitoring prevents one possible tank failure cause and is a possible indicator of tank leak (tank heat-up). PH control on transfers to tank farm maintain tank waste pH.

Table 5.4-2. Safety Structures, Systems, and Components and Technical Safety Requirements for Potential S1 Consequences with F3 Frequency. (47 Sheets)

ID	Hazardous Condition	Cause	Preventive SSCs	Preventive TSRs	Mitigative SSCs	Mitigative TSRs	Memo
CDP-01	Release of radioactive contamination to soil surface from crib or ditch due to animal intrusion	Animal intrusion into crib or ditch	None	None	None	None	No applicable SSCs or TSRs - Facility worker exposure controlled by Radiation Protection Program.
CDP-03	Release of radioactive contamination to soil surface from inactive pond due flooding in crib or ditch	Flooding	None	None	None	None	No applicable SSCs or TSRs - Facility worker exposure controlled by Radiation Protection Program.
CDP-06	Release of radioactive contamination to atmosphere from inactive pond due to high wind/ tornado disturbing inactive pond	High winds/ tornadoes	None	None	None	None	No applicable SSCs or TSRs - Facility worker exposure controlled by Radiation Protection Program.
CDP-08	Release of airborne radioactive contamination from contaminated vegetation due to fire in weed growth on top of cribs or ditches	Range fire	None	None	None	AC: Emergency Prep (Fire in Contaminated Area)	This control addresses this hazardous condition by minimizing exposure.
COB-02	Release of radioactive and/or hazardous material from COB due to spray leak	Flange, gasket or valve, spray leak with COB lid in place	None	AC: Trans Cntrls (Mis-routing) AC: Trans Pump Admin Lock Cntrls	SC: Trans Sys Cvrs SC: Trans Sys Supplemental Cvrs	LCO: Trans Sys Cvrs AC: Trans Sys Cvr Removal Cntrls AC: Trans Cntrls (Leak Detect/Cntrl) AC: Trans Pump Admin Lock Cntrls JCO: Supplemental Cvrs	These are applicable controls from the Spray Leak in Structure or from Overground Waste Transfer Lines accident analysis. These controls also address this hazardous condition for worker risk by prevention/minimizing of leak.

Table 5.4-2. Safety Structures, Systems, and Components and Technical Safety Requirements for Potential S1 Consequences with F3 Frequency. (47 Sheets)

ID	Hazardous Condition	Cause	Preventive SSCs	Preventive TSRs	Mitigative SSCs	Mitigative TSRs	Memo
COB-03	Release of radioactive and/or hazardous material from COB due to spray leak	Piping leak into COB due to chemical reaction degrading pipe, lid in place	None	AC: Trans Cntrls (Mis-routing) AC: Trans Cntrls (Leak Prevention/ Detect/Cntrl) AC: Trans Pump Admin Lock Cntrls	SC: Trans Sys Cvrs SC: Trans Sys Supplemental Cvrs	LCO: Trans Sys Cvrs AC: Trans Sys Cvr Removal Cntrls AC: Trans Cntrls (Leak Detect/Cntrl) AC: Trans Pump Admin Lock Cntrls JCO: Supplemental Cvrs	These are applicable controls from the Spray Leak in Structure or from Overground Waste Transfer Lines accident analysis. These controls address this hazardous condition for worker risk by preventing mis-transfers and minimizing exposure.
COB-05a	Release of radioactive and/or hazardous material from COB due to existing contamination inside COB and lid removed	Inspection of COB	None	None	None	None	No applicable SSCs or TSRs - Facility worker exposure controlled by Radiation Protection Program.
COB-05b	Release of radioactive and/or hazardous material from COB due to existing contamination inside COB and lid off during high wind	High wind with COB cover off	None	None	SC: Trans Sys Cvrs SC: Trans Sys Supplemental Cvrs	LCO: Trans Sys Cvrs AC: Trans Sys Cvr Removal Cntrls JCO: Supplemental Cvrs	These controls address this hazardous condition by minimizing release.
COB-05c	Release of radioactive and/or hazardous material from COB due to flooding	Flooding of COB due to rain/snow melt	None	None	SC: Trans Sys Leak Detect	LCO: Trans Sys Leak Detect	These controls address this hazardous condition by minimizing release.
COB-05d	Release of radioactive and/or hazardous material release from COB due to vehicle accident	Vehicle accident involving COB	None	AC: Ign Cntrls (Vehicle)	None	None	This control addresses this hazardous condition by minimizing vehicle accidents.
COB-05e	Release of radioactive and/or hazardous material from COB due to seismic event	Seismic event	None	None	None	AC: Emergency Prep (Seismic)	This control addresses this hazardous condition by minimizing exposure.

Table 5.4-2. Safety Structures, Systems, and Components and Technical Safety Requirements for Potential S1 Consequences with F3 Frequency. (47 Sheets)

ID	Hazardous Condition	Cause	Preventive SSCs	Preventive TSRs	Mitigative SSCs	Mitigative TSRs	Memo
COB-05f	Release of radioactive and/or hazardous material from COB due to existing contamination inside COB and COB lid off	Human error leaving COB lid off	SC: Trans Sys Cvrs SC: Trans Sys Supplemental Cvrs	LCO: Trans Sys Cvrs AC: Trans Sys Cvr Removal Cntrls JCO: Supplemental Cvrs	None	None	These controls address this hazardous condition by minimizing exposure.
COB-06a	Release of radioactive and/or hazardous material from COB due to COB caisson pressurized	Weather heatup with HEPA filter plugged	None	None	None	None	No applicable SSCs or TSRs -Hazardous condition not credible because COBs are not airtight (No HEPA filters).
COB-06b	Release of radioactive and/or hazardous material from COB due to COB caisson pressurized	Leak into COB with HEPA filter plugged	None	None	SC: Trans Sys Cvrs SC: Trans Sys Supplemental Cvrs	LCO: Trans Sys Cvrs AC: Trans Sys Cvr Removal Cntrls JCO: Supplemental Cvrs	These controls address this hazardous condition by prevention/ minimizing of leak. (No HEPA filters in COB configuration).
CP-GRT-01	Personnel exposure to contaminated pipe string due to removal of pipe during grouting	Contaminated soil in pipe	None	None	None	None	No applicable TSRs or SSCs - Facility worker exposure controlled by Radiation Protection Program.
CP-MSP-02	Release of radioactive or toxic material to soil (plume) remaining subsurface from transfer line due to puncture of line during transfer	Human error caused puncture to transfer line during push operations	None	AC: Excavation Cntrls	SC: Pipe Encasements SC: Trans Leak Detect Syss SS: Tank Level Detect Syss SS: Salt Well Flow Totalizers	LCO: Trans Leak Detect Syss AC: Trans Cntrls AC: Emergency Prep (Significant Release)	Controls based on accident analysis. (Subsurface Leak Remaining Subsurface and Spray Leak from Underground Transfer Lines).
CP-MSP-09	Release of isotope source to the soil surface due to load drop	Human Error caused load drop	None	None	None	None	No applicable TSRs or SSCs - Facility worker exposure controlled by Radiation Protection Program.
CP-MSP-11	Release of radioactive material to the soil surface due to crushed sensor package	Human Error: Heavy load inadvertently set on top of sensor package	None	None	None	None	No applicable TSRs or SSCs - Facility worker exposure controlled by Radiation Protection Program.

Table 5.4-2. Safety Structures, Systems, and Components and Technical Safety Requirements for Potential S1 Consequences with F3 Frequency. (47 Sheets)

ID	Hazardous Condition	Cause	Preventive SSCs	Preventive TSRs	Mitigative SSCs	Mitigative TSRs	Memo
CP-RMV-01	Release of radioactive or toxic material to soil (plume) remaining subsurface from inactive transfer line damaged during push operations	Human error caused puncture to inactive transfer line during push operations	None	AC: Excavation Cntrls	None	None	This control addresses the hazardous condition by preventing line puncture.
CP-RMV-02	Personnel exposure to high level waste contamination on surface of pipe string due contact with leaking waste	Human error caused puncture to inactive transfer line during push operations	None	None	None	None	No applicable TSRs or SSCs - Facility worker exposure controlled by Radiation Protection Program.
CP-RMV-04	Personnel exposure to radiation through push pipe due to puncture of tank dome	Human error results in removal of sample canister containment	None	None	None	None	No applicable TSRs or SSCs - Facility worker exposure controlled by Radiation Protection Program.
CP-SET-01	Release of radioactive or toxic material from above ground structure due to load movement	Mechanical failure of equipment causes load to swing into above ground structure	None	AC: Dome Loading Cntrls (Lifting Cntrls)	None	None	This control addresses the hazardous condition by controlling lifting activities.
CP-SET-02	Release of radioactive or toxic material from above ground structure due to load movement	Human error causes load to swing into above ground structure	None	AC: Dome Loading Cntrls (Lifting Cntrls)	None	None	This control addresses the hazardous condition by controlling lifting activities.
CP-SET-09	Release of isotope source from the MSP to the soil surface due to load drop	Human error causes load drop	None	None	None	None	No applicable TSRs or SSCs - Facility worker exposure controlled by Radiation Protection Program.
CP-SET-11	Release of radioactive material from the MSP to the soil surface due to crushing of the sensor package	Human error: Heavy load is inadvertently set on top of the sensor package	None	None	None	None	No applicable TSRs or SSCs - Facility worker exposure controlled by Radiation Protection Program.

Table 5.4-2. Safety Structures, Systems, and Components and Technical Safety Requirements for Potential S1 Consequences with F3 Frequency. (47 Sheets)

ID	Hazardous Condition	Cause	Preventive SSCs	Preventive TSRs	Mitigative SSCs	Mitigative TSRs	Memo
CP-SSP-02	Release of radioactive or toxic material to soil (plume) remaining subsurface from transfer line due to puncture of line during transfer	Human error caused puncture to transfer line during push operations	None	AC: Excavation Cntrls	SC: Pipe Encasements SC: Trans Leak Detect Syss SS: Tank Level Detect Syss SS: Salt Well Flow Totalizer	LCO: Trans Leak Detect Syss AC: Trans Cntrls AC: Emergency Prep (Significant Release) AC: Excavation Cntrls	Controls Selected (from Subsurface Leak Remaining Subsurface and Spray Leak From Underground Waste Transfer Lines).
CP-SSP-06	Personnel exposure to contaminated soil sample while removing sampling canister from pipe sleeve	Human error	None	None	None	None	No applicable TSRs or SSCs - Facility worker exposure controlled by Radiation Protection Program.
CP-SSP-09	Personnel exposure to contaminated pipe string caused by failure of sampling canister soil catcher to close properly	Mechanical failure	None	None	None	None	No applicable TSRs or SSCs - Facility worker exposure controlled by Radiation Protection Program.
CP-SSP-10	Personnel exposure to puff release of contaminated dust (particulates) caused by air movement as the sample canister is withdrawn from pipe sleeve	Contaminated inner tube	None	None	None	None	No applicable TSRs or SSCs - Facility worker exposure controlled by Radiation Protection Program.
CP-SSP-11	Release of contamination to environment due to dropping of the sample canister during transfer of sample from pipe to the shipping cask	Human error - workers drop sample canister or fail to handle properly	None	None	None	None	No applicable TSRs or SSCs - Facility worker exposure controlled by Radiation Protection Program.
CP-SSP-12	Release of contamination to environment due to dropping of the sample canister during transfer of sample from pipe to the shipping cask	Mechanical failure of the sample canister	None	None	None	None	No applicable TSRs or SSCs - Facility worker exposure controlled by Radiation Protection Program.
CP-SSP-13	Release of contamination to environment due to dropping of the sample canister during transfer of sample from outer push pipe to the shipping cask	High wind	None	None	None	None	No applicable TSRs or SSCs - Facility worker exposure controlled by Radiation Protection Program.

Table 5.4-2. Safety Structures, Systems, and Components and Technical Safety Requirements for Potential S1 Consequences with F3 Frequency. (47 Sheets)

ID	Hazardous Condition	Cause	Preventive SSCs	Preventive TSRs	Mitigative SSCs	Mitigative TSRs	Memo
CP-SSP-14	Release of contamination to environment due to dropping of the repackaged soil sample container	Human error - workers drop sample canister or fail to handle properly	None	None	None	None	No applicable TSRs or SSCs - Facility worker exposure controlled by Radiation Protection Program.
CRN-01	Release of radioactive and/or toxic materials from riser due to breach by crane movement	Human errors or failure to follow safe work practices	None	AC: Dome Loading Cntrls (Lifting Cntrls)	None	None	This control addresses this hazardous condition by controlling lifts.
CRN-01-I	Release of radioactive and/or toxic materials from riser breach due to crane movement	Human errors or failure to follow safe work practices	None	AC: Dome Loading Cntrls (Lifting Cntrls)	None	None	This control addresses this hazardous condition by controlling lifts.
CRN-02	Release of radioactive and/or toxic materials from riser due to breach by crane movement	Mechanical failures of crane (brakes, throttle)	None	AC: Dome Loading Cntrls (Lifting Cntrls)	None	None	This control addresses this hazardous condition by controlling lifts.
CRN-05-I	Release of radioactive and/or toxic materials from surface contamination and fuel tank on crane or support vehicle due to fuel tank fire (see In-Facility Equipment Installation for facility fires)	Human error in positioning crane load	None	AC: Ign Cntrls (Vehicles) AC: Dome Loading (Lifting Cntrls)	None	AC: Emergency Prep (Fire in Contaminated Area)	These controls address this hazardous condition by preventing fuel spill and minimizing exposure.
CRN-06-I	Release of radioactive and/or toxic materials from surface contamination and fuel tank on crane or support vehicle due to fuel tank fire (see In-Facility Equipment Installation for facility fires)	Mechanical failure in positioning crane load causes crane fuel tank rupture and fire	None	AC: Ign Cntrls (Vehicles) AC: Dome Loading (Lifting Cntrls)	None	AC: Emergency Prep (Fire in Contaminated Area)	These controls address this hazardous condition by preventing fuel spill and minimizing exposure.
CRN-17	Release of radioactive or toxic material from tanks due to power failure from crane hitting power lines/ supplies	Human error: improper load assembly, rigging, crane positioning	None	AC: Dome Loading Cntrls (Lifting Cntrls)	None	None	This control addresses this hazardous condition by controlling lifts.

Table 5.4-2. Safety Structures, Systems, and Components and Technical Safety Requirements for Potential S1 Consequences with F3 Frequency. (47 Sheets)

ID	Hazardous Condition	Cause	Preventive SSCs	Preventive TSRs	Mitigative SSCs	Mitigative TSRs	Memo
CVR-01	Release (greater than expected) of radioactive or hazardous material from pit due to lifting cover blocks	Failure to monitor or improper monitoring	None	None	None	None	No applicable SSCs or TSRs - Facility worker exposure controlled by Radiation Protection Program.
CVR-01-I	Release of greater than expected amount of radioactive or hazardous material from pit upon lifting coverblocks due to monitoring failure	Failure to monitor or improper monitoring	None	None	None	None	No applicable SSCs or TSRs - Facility worker exposure controlled by Radiation Protection Program.
CVR-02	Release (greater than expected) of radioactive or hazardous material from pit due to lifting cover blocks	Mechanical failure of equipment in pit (corrosion, leaks, etc)	None	None	None	None	No applicable SSCs or TSRs - Facility worker exposure controlled by Radiation Protection Program.
CVR-02-I	Release of greater than expected amount of radioactive or hazardous material from pit upon lifting coverblocks due to mechanical failures	Mechanical failure of equipment in pit (corrosion, leaks, etc)	None	None	None	None	No applicable SSCs or TSRs - Facility worker exposure controlled by Radiation Protection Program.
CVR-03	Release (greater than expected) of radioactive or hazardous material from pit due to lifting cover blocks	Wind or dust devil	None	None	None	None	No applicable SSCs or TSRs - Facility worker exposure controlled by Radiation Protection Program.
CVR-03-I	Release of greater than expected amount of radioactive or hazardous material from pit upon lifting coverblocks due to windy conditions	Wind or dust devil	None	None	None	None	No applicable SSCs or TSRs - Facility worker exposure controlled by Radiation Protection Program.
CVR-12-I	Release of radioactive or hazardous material from pit upon lifting coverblocks due to incorrect spraying of fixative	Spraying of fixative (soil cement) causes spray of material out of pit	None	None	None	None	No applicable SSCs or TSRs - Facility worker exposure controlled by Radiation Protection Program.

Table 5.4-2. Safety Structures, Systems, and Components and Technical Safety Requirements for Potential S1 Consequences with F3 Frequency. (47 Sheets)

ID	Hazardous Condition	Cause	Preventive SSCs	Preventive TSRs	Mitigative SSCs	Mitigative TSRs	Memo
CVR-13-I	Release of radioactive or hazardous material from pit upon lifting coverblocks due to open nozzles or risers in pit	Open nozzles or risers in pit with radioactive or hazardous material inside	None	None	None	None	No applicable SSCs or TSRs - Facility worker exposure controlled by Radiation Protection Program.
CVR-14-I	Injury of worker from biological hazards (spiders, snakes, etc.) due to open nozzles or risers in pit	Open nozzles or risers in pit with biological hazards (spiders, snakes, etc.) inside	None	None	None	None	No applicable SSCs or TSRs - Facility worker exposure controlled by Health and Safety Plan.
DCN-02	Release of radioactive or toxic material outside immediate area from equipment removed from tank due to decontamination of equipment	Miss direction of cleaning spray (human error)	None	None	None	None	No applicable SSCs or TSRs - Facility worker exposure controlled by Radiation Protection Program.
EE-02	Release of radioactive contaminants from Tank Farms due to external fires	Range fire	None	None	None	AC: Emergency Prep (Fire in Contaminated Area)	This control addresses this hazardous condition by minimizing exposure.
EE-09	Surface flooding at tank farm	Water line breaks and causes flooding at tank farm	None	AC: Tank Service Water Intrusion Mon Program	None	None	This control addresses this hazardous condition by detecting water line breakage.
I-222S-1-CMP-A	Release of 222-S lab waste from transfer line due to leak from rapid corrosion caused by transfer of pH 1 solution	Human error - failure to add sodium hydroxide	None	AC: Trans Cntrls (pH)	None	None	This control addresses this hazardous condition by controlling transfers.
I-222S-2-FLW-A	Release (steam) of aerosols and particulates to the atmosphere due to reverse flowing steam into Tank 219-S-102 which saturates the HEPAs	Block valve inadvertently closed at tank farms and transfer via this line	None	AC: Trans Cntrls (Mis-routing)	None	None	This control addresses this hazardous condition by preventing mis-routing. Hazardous condition not credible because steam supply in 200W disconnected.

Table 5.4-2. Safety Structures, Systems, and Components and Technical Safety Requirements for Potential S1 Consequences with F3 Frequency. (47 Sheets)

ID	Hazardous Condition	Cause	Preventive SSCs	Preventive TSRs	Mitigative SSCs	Mitigative TSRs	Memo
I-242A-2-CMP-A	Release (potential for leak) to tank annulus (secondary confinement) caused by damage to feed tank due to overfilling of tank	Valve failure or inadvertently opened valve	None	None	SC: Primary Tank Leak Detect Syss	LCO: Primary Tank Leak Detect Syss	Controls address this hazardous condition by indicating leak and minimizing releases.
I-242A-4-FLW-A	Release of diluted high level waste to the ground through risers after unmitigated over filling of Tank 241-AW-102 and annulus with condensate	Tube rupture of raw water in condenser	SC: Trans Leak Detect Syss	LCO: Trans Leak Detect	SC: Trans Leak Detect Syss SC: Primary Tank Leak Detect Syss SC: Trans Sys Cvrs SC: Trans Sys Supplemental Cvrs	LCO: Trans Sys Cvrs LCO: Trans Leak Detect Syss LCO: Primary Tank Leak Detect Syss AC: Trans Pump Admin Lock Cntrls AC: Trans Sys Cvr Removal Cntrls JCO: Supplemental Cvrs	These controls address this hazardous condition by indicating leak and minimizing release.
I-242A-6-FLW-A	Release of diluted high level waste to the ground through risers after unmitigated over filling of Tank 241-AW-102 and annulus with raw water	Rupture of raw water line in condenser/pump room	SC: Trans Leak Detect Syss	LCO: Trans Leak Detect	SC: Trans Leak Detect Syss SC: Primary Tank Leak Detect Syss SC: Trans Sys Cvrs SC: Trans Sys Supplemental Cvrs	LCO: Trans Sys Cvrs LCO: Trans Leak Detect Syss LCO: Primary Tank Leak Detect Syss AC: Trans Pump Admin Lock Cntrls AC: Trans Sys Cvr Removal Cntrls JCO: Supplemental Cvrs	These controls address this hazardous condition by indicating leak and minimizing release.
I-242A-6-FLW-C	Release of contaminated aerosols to the 242-A Evaporator building through the drain lines, potential worker hazard	Higher vacuum at evaporator than at tank farms	None	None	None	None	No applicable SSCs or TSRs - Facility worker exposure controlled by Radiation Protection Program.
I-242S-1-PRS-A	Release of airborne contaminates through cracks due to over pressurization of 242-S building and contamination of control room where tank farm controls are located	Exhaust fan failure	None	None	None	None	No applicable SSCs or TSRs - Facility worker exposure controlled by Radiation Protection Program.

Table 5.4-2. Safety Structures, Systems, and Components and Technical Safety Requirements for Potential S1 Consequences with F3 Frequency. (47 Sheets)

ID	Hazardous Condition	Cause	Preventive SSCs	Preventive TSRs	Mitigative SSCs	Mitigative TSRs	Memo
I-242S-1-TMP-A	Release of contaminated water to the ground outside of the 242-S Evaporator due to unmitigated leak in the pump room from the fire protection system's frozen and ruptured line	Low ambient temperature freezes and breaks pipe	None	None	None	None	No applicable SSCs or TSRs - Facility worker exposure controlled by Radiation Protection Program.
I-242S-4-LEK-B	Release of contaminated water to the atmosphere due to spray leak at the condenser room, caused by corrosion in the pipe	Corrosion in pipe line	None	None	None	None	This is not a TWRS related event.
I-242T-3-FLW-A	Release of high level waste to the ground surface by overflowing the "new" diversion box caused by opened or leaking valve	Block valve inadvertently opened or leaking	None	None	None	AC: Emergency Prep (Significant Release)	This control addresses this hazardous condition by minimizing exposure.
I-242T-4-FLW-A	Release of high level waste to the ground surface from overflowing the "new" diversion box due to failure of 242-T building and rupture of tanks in 242-T	Catastrophic failure of the building due to aging effects	None	None	None	AC: Emergency Prep (Significant Release)	This control addresses this hazardous condition by minimizing exposure.
I-PFP-1-LVL-A	Release (underground) of TRU mixed waste at DCRT pit due to potential to send steam vapor to 244 TX DCRT, potential for thermal expansion to damage transfer pipe and leak to encasement pipe which drains to DCRT pit	Human error - failing to stop transfer to 244 TX when Tank D-5 is empty	SS: Pipe Encasements	AC: Trans Cntrls AC: Trans Pump Admin Lock Cntrls	SC: Trans Sys Cvrs SC: Trans Sys Supplemental Cvrs SS: Pipe Encasements SS: Trans Leak Detect Syss	LCO: Trans Sys Cvrs LCO: Trans Leak Detect Syss AC: Trans Cntrls AC: Trans Sys Cvr Removal Cntrls JCO: Supplemental Cvrs	These controls address this hazardous condition by indicating leakage and minimizing exposure.
I-PFP-3-FLW-C	Release of TRU mixed waste from 244 TX overfilling due to transfer error	Transferring from Tank D-7 or Tank D-8 to Tank D-5 while transferring from Tank D-5 to 244 TX	None	AC: Trans Cntrls (Leak Prevention/ Detect/Cntrl)	SC: Trans Leak Detect Syss SC: Trans Sys Cvrs	LCO: Trans Sys Cvrs AC: Trans Cntrls (Leak Prevention/ Detect/Cntrl) AC: Trans Pump Admin Lock Cntrls	These controls address this hazardous condition by indicating leak and minimizing exposure.

Table 5.4-2. Safety Structures, Systems, and Components and Technical Safety Requirements for Potential S1 Consequences with F3 Frequency. (47 Sheets)

ID	Hazardous Condition	Cause	Preventive SSCs	Preventive TSRs	Mitigative SSCs	Mitigative TSRs	Memo
I-PUREX-1-TMP-A	Release from Tank 241-AW-105 through cracks in the cover block due to pressurizing tank from addition of hot waste to the tank	Human error - adding caustic (sodium hydroxide) to waste or transferring to U-3 via a steam jet and transferring from U-3 to Tank 241-AW-105 before the waste cools	SC: DST/AWF Ventilation	LCO: DST and AWF Tank Ventilation Syss	None	None	These controls address this hazardous condition by maintaining tank vacuum.
I-PUREX-2-PRS-B	Release of aerosols through cracks in the cover block due to pressurizing the receiver tank from an extended air purge of the transfer line	Extended air purge after transfer (mechanical failure)	SC: DST/AWF Ventilation	LCO: DST and AWF Tank Ventilation Syss	None	None	These controls address this hazardous condition by maintaining tank vacuum.
I-PUREX-3-TMP-A	Release of aerosols from Tank 241-AW-105 through cracks in the cover block due to pressurizing tank from addition of hot waste	Human error - adding caustic (sodium hydroxide) to waste or transferring to U-3 via a steam jet and transferring from U-3 to Tank 241-AW-105 before the waste cools	SC: DST/AWF Ventilation	LCO: DST and AWF Tank Ventilation Syss	None	None	These controls address this hazardous condition by maintaining tank vacuum.
I-PUREX-4-PRS-B	Release of aerosols through cracks in the cover block due to pressurizing the receiver tank from an extended air purge of the transfer line	Extended air purge after transfer (mechanical failure)	SC: DST/AWF Ventilation	LCO: DST and AWF Tank Ventilation Syss	None	None	These controls address this hazardous condition by maintaining tank vacuum.
I-PUREX-5-FLW-A	Release of aerosols through cracks in cover block due to pressurizing receiver tank caused by transferring waste with steam which heats the waste	Multiple deactivation locks removed and valves opened or multiple valves leaking	SC: DST/AWF Ventilation	LCO: DST and AWF Tank Ventilation Syss	None	None	These controls address this hazardous condition by maintaining tank vacuum.

Table 5.4-2. Safety Structures, Systems, and Components and Technical Safety Requirements for Potential S1 Consequences with F3 Frequency. (47 Sheets)

ID	Hazardous Condition	Cause	Preventive SSCs	Preventive TSRs	Mitigative SSCs	Mitigative TSRs	Memo
ITK-01-I	Release of radioactive and/or hazardous material from point of in-facility access due to chemical/thermal reaction (non-fire, non-explosion)	Chemical/thermal reaction of materials in equipment/waste	None	None	None	None	No applicable SSCs or TSRs - Facility worker exposure controlled by Radiation Protection Program.
ITK-03	Release of radioactive and/or hazardous material from point of in-tank access (non-fire, non-explosion) due to intrusive activity	Contaminated equipment removed or reused	None	None	None	None	No applicable SSCs or TSRs - Facility worker exposure controlled by Radiation Protection Program.
ITK-03-I	Release of radioactive and/or hazardous material from point of in-facility access due to equipment removal (non-fire, non-explosion)	Contaminated equipment removed or reused	None	None	None	None	No applicable SSCs or TSRs - Facility worker exposure controlled by Radiation Protection Program.
ITK-04	Release of radioactive and/or hazardous material from point of in-tank access (non-fire, non-explosion) due to earthquake or high wind with open access	Seismic event or high wind when access open	None	None	None	AC: Emergency Prep (Seismic)	This control addresses this hazardous condition by minimizing personnel exposure.
ITK-07	Radioactive and/or hazardous material release from tank below grade (non-fire, non-explosion) due to intrusive activity	Dropped equipment in tank from human error or equipment failures (also see crane operations) Penetration of tank with linear-force, high pressure, or rotational equipment from human error or equipment failure	None	AC: Dome Loading Cntrls (Lifting Cntrls)	None	None	These are applicable controls from the Tank Failure Due to Excessive Loads accident analysis. This control also addresses this hazardous condition for worker risk by preventing equipment drop.
ITK-FR-01	Release of radioactive or hazardous material from flex receiver due to flushing with insufficient drainage	Riser not drained correctly or drain clogged causing plugging of riser	None	None	None	None	No applicable SSCs or TSRs - Facility worker exposure controlled by Radiation Protection Program.

Table 5.4-2. Safety Structures, Systems, and Components and Technical Safety Requirements for Potential S1 Consequences with F3 Frequency. (47 Sheets)

ID	Hazardous Condition	Cause	Preventive SSCs	Preventive TSRs	Mitigative SSCs	Mitigative TSRs	Memo
ITK-FR-02	Release of radioactive or hazardous material from flex receiver due to equipment jam in riser and non-procedural efforts to dislodge	Equipment becomes lodged in riser upon retrieval and non-procedural efforts to remove provide release path for tank material and/or flush water	None	None	None	None	No applicable SSCs or TSRs - Facility worker exposure controlled by Radiation Protection Program.
ITK-FR-05	Release of radioactive or hazardous material from flex receiver due to structural failure	Human error tears flex receiver bag	None	None	None	None	No applicable SSCs or TSRs - Facility worker exposure controlled by Radiation Protection Program.
ITK-FR-06	Release of radioactive or hazardous material from flex receiver due to structural failure	Equipment failure/ misalignment tears flex receiver bag (crane operation, hydraulic jack stand)	None	None	None	None	No applicable SSCs or TSRs - Facility worker exposure controlled by Radiation Protection Program.
ITK-FR-07	Release of radioactive or hazardous material from flex receiver due to structural failure	Structural degradation	None	None	None	None	No applicable SSCs or TSRs - Facility worker exposure controlled by Radiation Protection Program.
ITK-FR-14	Release of radioactive or hazardous material from flex receiver due to leak from flanges	Non-acceptable torque on bolts connecting bellows - torque too low not enough pressure for adequate seal, to high destroys seal material	None	None	None	None	No applicable SSCs or TSRs - Facility worker exposure controlled by Radiation Protection Program.
ITK-FR-15	Release of radioactive or hazardous material from flex receiver due to errors in installation	Incorrect installation of receiver provides release path (misalignment of bellows)	None	None	None	None	No applicable SSCs or TSRs - Facility worker exposure controlled by Radiation Protection Program.

Table 5.4-2. Safety Structures, Systems, and Components and Technical Safety Requirements for Potential S1 Consequences with F3 Frequency. (47 Sheets)

ID	Hazardous Condition	Cause	Preventive SSCs	Preventive TSRs	Mitigative SSCs	Mitigative TSRs	Memo
ITK-FR-18	Release of radioactive or hazardous material from flex receiver due to damage from operation of hydraulic jacks	Hydraulic jacks on assembly stand are operated while assembly is bolted to flange damaging flex receiver or riser creating release path	None	None	None	None	No applicable SSCs or TSRs - Facility worker exposure controlled by Radiation Protection Program.
ITK-FR-20	Release of radioactive or hazardous material from flex receiver due to wrong bag being used	Containment bag is too short to hold equipment being withdrawn from tank, condition goes unnoticed until containment is lost	None	None	None	None	No applicable SSCs or TSRs - Facility worker exposure controlled by Radiation Protection Program.
ITK-FR-21	Release of radioactive or hazardous material from flex receiver due to operation in extreme weather	Operation in cold weather compromises strength of flex receiver, equipment breaks providing release path	None	None	None	None	No applicable SSCs or TSRs - Facility worker exposure controlled by Radiation Protection Program.
ITK-FR-23	Release of radioactive or hazardous material from flex receiver due to equipment failure	Plexiglass window on receiver breaks causing release path	None	None	None	None	No applicable SSCs or TSRs - Facility worker exposure controlled by Radiation Protection Program.
ITK-FR-26	Release of radioactive or hazardous material from flex receiver due to leak from bag	Equipment mispositioned in receiver bag creating inappropriate seal and leak	None	None	None	None	No applicable SSCs or TSRs - Facility worker exposure controlled by Radiation Protection Program.
ITK-FR-28	Release of radioactive or hazardous material from flex receiver due to containment breach during transfer	Receiver trailer falls over with bagged equipment attached ripping bag and creating release path	None	None	None	None	No applicable SSCs or TSRs - Facility worker exposure controlled by Radiation Protection Program.
LDUA 1-10	Worker exposure due to leak of waste into LDUA components	Line plug	None	None	None	None	No applicable SSC's or TSR's - Facility worker exposure controlled by Radiation Protection Program.

Table 5.4-2. Safety Structures, Systems, and Components and Technical Safety Requirements for Potential S1 Consequences with F3 Frequency. (47 Sheets)

ID	Hazardous Condition	Cause	Preventive SSCs	Preventive TSRs	Mitigative SSCs	Mitigative TSRs	Memo
LDUA 1-11	Worker exposure due to leak of waste into LDUA components	Line break	None	None	None	None	No applicable SSC's or TSR's - Facility worker exposure controlled by Radiation Protection Program.
LDUA 1-34	Worker exposure due to operation error or mechanical failure	Operator error or mechanical failure	None	None	None	None	No applicable SSC's or TSR's - Facility worker exposure controlled by Radiation Protection Program.
LDUA 2-13	Worker exposure due to leak of waste into LDUA components	Line plug	None	None	None	None	No applicable SSC's or TSR's - Facility worker exposure controlled by Radiation Protection Program.
LDUA 2-14	Worker exposure due to leak of waste into LDUA components	Line break	None	None	None	None	No applicable SSC's or TSR's - Facility worker exposure controlled by Radiation Protection Program.
LDUA 2-50	Worker injury due to equipment damage	Human error, software bug	None	None	None	None	No applicable SSC's or TSR's - Facility worker injury controlled by Health and Safety Plan.
LDUA 2-53	Worker exposure due to contamination in LDUA	LDUA contamination - due to in-tank activities	None	None	None	None	No applicable SSC's or TSR's - Facility worker exposure controlled by Radiation Protection Program.
LDUA 2-54	Worker injury due to industrial accidents	Industrial accidents	None	None	None	None	No applicable SSC's or TSR's - Facility worker injury controlled by Health and Safety Plan.

Table 5.4-2. Safety Structures, Systems, and Components and Technical Safety Requirements for Potential S1 Consequences with F3 Frequency. (47 Sheets)

ID	Hazardous Condition	Cause	Preventive SSCs	Preventive TSRs	Mitigative SSCs	Mitigative TSRs	Memo
LDUA 3-1	Release of radioactive aerosols from the TRIC due to filter plug and pressurization	TRIC filter inlet plugs (dust, ice, etc.)	None required	None required	None required	None required	No applicable SSC's or TSR's - Facility worker exposure controlled by Radiation Protection Program.
LDUA 3-15	Release of radioactive aerosols from the TRIC due to filter plug and pressurization	HEPA filter plugs with frozen condensation	None required	LCO: SST Ventilation Syss - Passive	None required	None required	This control addresses the hazardous condition by assuring that passive ventilation system is functioning.
LDUA 3-19	Worker injury due to general industrial hazards	General industrial hazards (e.g. during end effector change out)	None	None	None	None	No applicable SSC's or TSR's - Facility worker injury controlled by Health and Safety Plan.
LDUA 3-2	Release of contamination from LDUA due to loss of containment	Door not sealed, loss of glove	None required	None required	None required	None required	No applicable SSC's or TSR's - Facility worker exposure controlled by Radiation Protection Program.
LDUA 3-20	Worker injury due to electric shock	Electric shock hazards during hook-up and maintenance	None	None	None	None	No applicable SSC's or TSR's - Facility worker injury controlled by Health and Safety Plan.
LDUA 3-21	Release of contamination to ground from LDUA due to impact from pressurized water/ decontamination system	500-psi water (from decontamination system) causes impact hazards	None required	None required	None required	None required	No applicable SSC's or TSR's - Facility worker exposure controlled by Radiation Protection Program.
LDUA 3-22	Release of contamination from riser and TRIC due to loss of confinement	Riser valve open while end effectors being placed in TRIC	None required	None required	None required	None required	No applicable SSC's or TSR's - Facility worker exposure controlled by Radiation Protection Program.

Table 5.4-2. Safety Structures, Systems, and Components and Technical Safety Requirements for Potential S1 Consequences with F3 Frequency. (47 Sheets)

ID	Hazardous Condition	Cause	Preventive SSCs	Preventive TSRs	Mitigative SSCs	Mitigative TSRs	Memo
LDUA 3-23	Release or radioactive aerosols from riser due to spark igniting flammable gas	Plug gauge (carbon steel) becomes stuck in riser during riser characterization	SC: SST Ventilation	LCO: SST Ventilation Syss - Active LCO: SST Ventilation Syss - Passive AC: Flammable Gas Mon Cntrls	None required	AC: HEPA Filter Cntrls (Source Term)	Controls based on BIO Appendix E.
LDUA 3-24	Release of contamination from TRIC due to load drop	TRIC dropped from crane	None required	AC: Dome Loading Cntrls (Lifting Cntrls)	None required	None required	This control addresses the hazardous condition by preventing load drop.
LDUA 3-25	Release of contamination from LDUA due to incorrect installation	VPM adapter, HEPA, Gloves, Door, incorrectly installed/sealed (leaks)	None required	None required	None required	None required	No applicable SSC's or TSR's - Facility worker exposure controlled by Radiation Protection Program.
LDUA 3-28	Release of contamination from riser due to high winds	High winds stress riser	None required	None required	None required	None required	No controls required based on accident analysis (Above Ground Structure Failure).
LDUA 3-4	Worker exposure due to purge system overpressure - increased contamination in TRIC	Purge system overpressure (VPM auxiliary hookup)	None	None	None	None	No applicable SSC's or TSR's - Facility worker exposure controlled by Radiation Protection Program.
LDUA 3-5	Worker exposure due to loss of decontamination water flow	Loss of decontamination water flow	None	None	None	None	No applicable SSC's or TSR's - Facility worker exposure controlled by Radiation Protection Program.
LDUA 3-7	Worker exposure due to plug in decontamination line resulting in poor decontamination	Decontamination water line plugs due to solids	None	None	None	None	No applicable SSC's or TSR's - Facility worker exposure controlled by Radiation Protection Program.

Table 5.4-2. Safety Structures, Systems, and Components and Technical Safety Requirements for Potential S1 Consequences with F3 Frequency. (47 Sheets)

ID	Hazardous Condition	Cause	Preventive SSCs	Preventive TSRs	Mitigative SSCs	Mitigative TSRs	Memo
LDUA 4-10	Worker exposure due to ignition of flammable gas inside VPM	Loss of supply air from VPM outer tube.	None	None	None	None	No applicable SSC's or TSR's - Facility worker exposure controlled by Radiation Protection Program.
LDUA 4-11	Worker injury due to blow out of housing panel	Supply pressure on with the VPM housing gate closed	None	None	None	None	No applicable SSC's or TSR's - Facility worker injury controlled by Health and Safety Plan.
LDUA 4-27	Release of contamination due to thermal degradation of VPM housing	Thermal expansion/ contraction of atmosphere in housing while in storage	None required	None required	None required	None required	No applicable SSC's or TSR's - Facility worker exposure controlled by Radiation Protection Program.
LDUA 4-30	Release of contamination due to corrosion of VPM	Poor decontamination, caustic waste contacts arm, causes corrosion of VPM	None required	None required	None required	None required	No applicable SSC's or TSR's - Facility worker exposure controlled by Radiation Protection Program.
LDUA 4-39	Worker exposure due to loss of computer controls/requires manual retrieval of mast	Loss of computer	None	None	None	None	No applicable SSC's or TSR's - Facility worker exposure controlled by Radiation Protection Program.
LDUA 4-40	Worker exposure due to insufficient decontamination	Mast tubes not sufficiently decontaminated prior to removal	None	None	None	None	No applicable SSC's or TSR's - Facility worker exposure controlled by Radiation Protection Program.
LDUA 4-43	Worker injury due to industrial hazards	Industrial hazards during maintenance	None	None	None	None	No applicable SSC's or TSR's - Facility worker injury controlled by Health and Safety Plan.

Table 5.4-2. Safety Structures, Systems, and Components and Technical Safety Requirements for Potential S1 Consequences with F3 Frequency. (47 Sheets)

ID	Hazardous Condition	Cause	Preventive SSCs	Preventive TSRs	Mitigative SSCs	Mitigative TSRs	Memo
LDUA 4-8	Worker exposure due to leak of waste into LDUA components	Line plug	None	None	None	None	No applicable SSC's or TSR's - Facility worker exposure controlled by Radiation Protection Program.
LDUA 4-9	Worker exposure due to leak of waste into LDUA components	Line break	None	None	None	None	No applicable SSC's or TSR's - Facility worker exposure controlled by Radiation Protection Program.
LDUA 5-17	Worker injury due to inadvertent motion of valve	Operator error, improperly positioned valves	None	None	None	None	No applicable SSC's or TSR's - Facility worker injury controlled by Health and Safety Plan.
LDUA 5-21	Worker injury due to shock load damaging equipment	Shock load causes damage	None	None	None	None	No applicable SSC's or TSR's - Facility worker injury controlled by Health and Safety Plan.
LDUA 5-23	Release of hazardous material to environment from truck battery due to inadvertent spill/ potential ignition	Truck battery acid spill, deflagration	None required	None required	None required	None required	No applicable SSC's or TSR's - Facility worker injury controlled by Health and Safety Plan.
LDUA 5-29	Release of contamination from LDUA or riser due to spark igniting flammable gas	Truck backs into tank farm equipment (e.g., riser, pump pit)	SC: SST Ventilation	LCO: SST Ventilation Syss - Active LCO: SST Ventilation Syss - Passive AC: Ign Cntrls (Vehicles) AC: Flammable Gas Mon Cntrls	None required	AC: HEPA Filter Cntrls (Source Term)	Controls based on BIO Appendix E.
LDUA 5-30	Release of contamination from LDUA or riser due to damage from vehicles	Truck moves after setup	None required	AC: Ign Cntrls (Vehicles)	None required	None required	This control addresses the hazardous condition by minimizing vehicle accidents.

Table 5.4-2. Safety Structures, Systems, and Components and Technical Safety Requirements for Potential S1 Consequences with F3 Frequency. (47 Sheets)

ID	Hazardous Condition	Cause	Preventive SSCs	Preventive TSRs	Mitigative SSCs	Mitigative TSRs	Memo
LDUA 5-31	Release of contamination due to transport vehicle accident.	Vehicle accident during transport	None required	None required	None required	None required	None (All control activity deferred to packaging safety analysis).
LDUA 5-32	Worker injury due to vehicle engine fire	Vehicle engine fire	None	None	None	None	No applicable SSC's or TSR's - Facility worker injury controlled by Health and Safety Plan.
LDUA 5-33	Release of contamination from LDUA or riser due to damage from vehicles	Failure to deploy outriggers or premature retraction of outriggers	None required	None required	None required	None required	No controls required based on accident analysis (Above Ground Structure Failure).
LDUA 5-35	Worker exposure due to misalignment of mast arm during insertion creating external contamination	Misaligning during insertion	None	None	None	None	No applicable SSC's or TSR's - Facility worker exposure controlled by Radiation Protection Program.
LDUA 5-36	Release of contamination from LDUA or riser due to damage from improper operation	Attempting to lower VPM to horizontal while arm is in riser	None required	None required	None required	None required	No controls required based on accident analysis (Above Ground Structure Failure).
LDUA 5-39	Release of contamination from LDUA or riser due to equipment failure causing riser damage	Brakes not operating as designed	None required	None required	None required	None required	No controls required based on accident analysis (Above Ground Structure Failure).
LDUA 5-41	Release of contamination from TRIC and tank riser due to damage during seismic event	Seismic event	None required	None required	None required	AC: Emergency Prep (Seismic)	Controls based on analyzed accident Natural Phenomena - Seismic.
LDUA 5-42	Release of contamination from LDUA or riser due to damage from vehicle operation resulting in fire	Other truck impact	None required	AC: Ign Cntrls (Vehicles)	None required	AC: Emergency Prep (Fire in Contaminated Area)	The controls address the hazardous condition through minimization of vehicle accidents and the appropriate response to fires.

Table 5.4-2. Safety Structures, Systems, and Components and Technical Safety Requirements for Potential S1 Consequences with F3 Frequency. (47 Sheets)

ID	Hazardous Condition	Cause	Preventive SSCs	Preventive TSRs	Mitigative SSCs	Mitigative TSRs	Memo
LDUA 5-44	Release of contamination from LDUA or riser due to damage from vehicle operation	Heavy rain or ponded surface water or flood	None required	None required	None required	None required	No controls required based on accident analysis (Above Ground Structure Failure).
LDUA 6-28	Worker injury due to communication failure	Communication failure between control locations and TRIC during maintenance	None	None	None	None	No applicable SSC's or TSR's - Facility worker injury controlled by Health and Safety Plan.
LDUA 6-29	Worker injury due to lifting	Lifting injuries in moving heavy cable	None	None	None	None	No applicable SSC's or TSR's - Facility worker injury controlled by Health and Safety Plan.
LDUA 6-30	Worker injury due to electric shock	Electrical malfunction	None	None	None	None	No applicable SSC's or TSR's - Facility worker injury controlled by Health and Safety Plan.
LDUA 6-5	Worker injury due to fire	Fire	None	None	None	None	No applicable SSC's or TSR's - Facility worker injury controlled by Health and Safety Plan.
LDUA 6-7	Worker injury due to electric shock	Impact, severing of cable by heavy equipment	None	None	None	None	No applicable SSC's or TSR's - Facility worker injury controlled by Health and Safety Plan.
LDUA 7-12	Worker injury due to accident when parking trailer	Collision with obstacles during parking of trailer	None	None	None	None	No applicable SSC's or TSR's - Facility worker injury controlled by Health and Safety Plan.
LDUA 7-13	Worker injury due to electric shock	Improper grounding - bonding	None	None	None	None	No applicable SSC's or TSR's - Facility worker injury controlled by Health and Safety Plan.

Table 5.4-2. Safety Structures, Systems, and Components and Technical Safety Requirements for Potential S1 Consequences with F3 Frequency. (47 Sheets)

ID	Hazardous Condition	Cause	Preventive SSCs	Preventive TSRs	Mitigative SSCs	Mitigative TSRs	Memo
LDUA 7-14	Worker injury due to electric shock	Electrical shock hazards during hook-up	None	None	None	None	No applicable SSC's or TSR's - Facility worker injury controlled by Health and Safety Plan.
LDUA 7-16	Worker injury due to electric shock	Dust in electronic distribution disconnects and junction box	None	None	None	None	No applicable SSC's or TSR's - Facility worker injury controlled by Health and Safety Plan.
LDUA 7-3	Worker injury due to slipping hazard	Slipping hazards	None	None	None	None	No applicable SSC's or TSR's - Facility worker injury controlled by Health and Safety Plan.
LDUA 7-4	Worker injury due to fire	Fire in trailer	None	None	None	None	No applicable SSC's or TSR's - Facility worker injury controlled by Health and Safety Plan.
LDUA 7-6	Worker injury due to trailer falling over	Wind	None	None	None	None	No applicable SSC's or TSR's - Facility worker injury controlled by Health and Safety Plan.
LDUA 7-7	Worker injury due to trailer falling over	Seismic event	None	None	None	None	No applicable SSC's or TSR's - Facility worker injury controlled by Health and Safety Plan.
LDUA/EREE 1-10	Worker exposure due to leak of waste into EREE	Line break	None	None	None	None	No applicable SSC's or TSR's - Facility worker exposure controlled by Radiation Protection Program.

Table 5.4-2. Safety Structures, Systems, and Components and Technical Safety Requirements for Potential S1 Consequences with F3 Frequency. (47 Sheets)

ID	Hazardous Condition	Cause	Preventive SSCs	Preventive TSRs	Mitigative SSCs	Mitigative TSRs	Memo
LDUA/EREE 1-29	Worker exposure due to operator error/ mechanical failure	Operator error or mechanical failure	None	None	None	None	No applicable SSC's or TSR's - Facility worker exposure controlled by Radiation Protection Program.
LDUA/EREE 1-30	Worker exposure due to operator error/ mechanical failure	Operator error or mechanical failure	None	None	None	None	No applicable SSC's or TSR's - Facility worker exposure controlled by Radiation Protection Program.
LDUA/EREE 1-9	Worker exposure due to leak of waste into EREE	Line plug	None	None	None	None	No applicable SSC's or TSR's - Facility worker exposure controlled by Radiation Protection Program.
NP-01	Radioactive and hazardous material release from tanks and ventilation system due to loss of electric power	Lightning strikes power distribution system	None	AC: Ign Cntrls (Lightning)	None	None	This control addresses this hazardous condition by stopping intrusive activities and minimizing potential exposure to worker if ventilation is lost.
NP-06	Radioactive and hazardous material releases from tanks, nearby ground surfaces, and ventilation systems due to above ground disturbances	High wind	None	None	None	None	No applicable SSCs or TSRs - Facility worker exposure controlled by Radiation Protection Program.
NP-12	Radioactive and hazardous material releases from tanks due to ventilation system failures	Dust storms/dust devils	None	None	None	None	No applicable SSCs or TSRs - Facility worker exposure controlled by Radiation Protection Program.
NP-14	Radioactive and hazardous material releases from tanks due to loss of power to ventilation systems	Severe hail	None	None	None	None	No applicable SSCs or TSRs - Facility worker exposure controlled by Radiation Protection Program.

Table 5.4-2. Safety Structures, Systems, and Components and Technical Safety Requirements for Potential S1 Consequences with F3 Frequency. (47 Sheets)

ID	Hazardous Condition	Cause	Preventive SSCs	Preventive TSRs	Mitigative SSCs	Mitigative TSRs	Memo
OGT-FLOW1-01	Personnel exposure to radioactive or hazardous material in the primary pipe due to pump failure	Pump failure, material settles in line (crystallization) and plugs line prohibiting transfer/waste is sitting in line and creates increased exposure to personnel	None	None	None	None	No applicable SSCs or TSRs - Facility worker exposure controlled by Radiation Protection Program.
OGT-OPS1-01	Release of radioactive or hazardous material from the primary pipe due to line crushing from equipment drop	Drop shield blocks on transfer line during disassembly after pumping complete, potential to break primary and secondary line	None	AC: Dome Loading Cntrls (Lifting Cntrls)	None	None	This control addresses this hazardous condition by preventing equipment drop.
OGT-SPEC1-01	Personnel exposure to radioactive or hazardous material in the primary pipe due to loss of electrical supply	Loss of flow leading to line plug and the need to remove/replace, unclog line	None	None	None	None	No applicable SSCs or TSRs - Facility worker exposure controlled by Radiation Protection Program.
RSR-01	Release of radioactive and/or toxic material upon opening of riser due to human error	Human error - improper contamination control, failure to monitor (rad or sniff), improper monitoring	None	None	None	None	No applicable SSCs or TSRs - Facility worker exposure controlled by Radiation Protection Program.
RSR-01-1	Release of radioactive and/or toxic material from the vapor space due to opening of riser	Human error - improper contamination control, failure to monitor (rad or sniff), improper monitoring	None	None	None	None	No applicable SSCs or TSRs - Facility worker exposure controlled by Radiation Protection Program.
SFF-01	Release of radioactive and/or toxic materials during sniff sampling due to human error or instrument failure	Improper sniffing technique or instrument failure, failure to perform radiation monitoring, improper monitoring, or instrument failure	None	None	None	None	No applicable SSCs or TSRs - Facility worker exposure controlled by Radiation Protection Program.

Table 5.4-2. Safety Structures, Systems, and Components and Technical Safety Requirements for Potential S1 Consequences with F3 Frequency. (47 Sheets)

ID	Hazardous Condition	Cause	Preventive SSCs	Preventive TSRs	Mitigative SSCs	Mitigative TSRs	Memo
VSU-01	Release of residual contamination and/or hazardous material from VSU due to VSU lid being left off	VSU lid is left off due to human error, wind blows	None	None	None	None	No applicable SSCs or TSRs - Facility worker exposure controlled by Radiation Protection Program.
VSU-02	Release of residual contamination and/or hazardous material from VSU due to VSU lid being left off	VSU lid is left off due to human error, rain/snow melt seeps out bottom of VSU	None	None	None	None	No applicable SSCs or TSRs - Facility worker exposure controlled by Radiation Protection Program.
VSU-03	Release of residual contamination and/or hazardous material from VSU due to VSU wall degradation	VSU wall degradation over time	None	None	None	None	No applicable SSCs or TSRs - Facility worker exposure controlled by Radiation Protection Program.
VSU-04	Release of residual contamination and/or hazardous material from VSU due to internal VSU pressurization	Covered VSU pressurizes due to ambient temperature heat-up	None	None	None	None	No applicable SSCs or TSRs - Facility worker exposure controlled by Radiation Protection Program.
XS-01-PRES02	Release of liquid radioactive waste from transfer pipe due to damaged saltwell pump	Leak from pump or seal from various causes	None	AC: Trans Cntrls (Leak Prevention and Mis-routing) AC: Trans Pump Admin Lock Cntrls	SC: Trans Sys Cvrs SC: Trans Sys Supplemental Cvrs SC: Trans Leak Detect Syss SS: Salt Well Flow Totalizer SS: Tank Level Detect Sys	LCO: Trans Sys Cvrs LCO: Trans Leak Detect Syss AC: Trans Cntrls (Mis-rout/Leak Detect/Cntrl) AC: Trans Pump Admin Lock Cntrls AC: Trans Sys Cvr Removal Cntrls AC: Emergency Prep (Significant Release) JCO: Supplemental Cvrs	These controls address this hazardous condition for worker risk by indicating leak and minimizing releases. The applicable controls for environmental release are identified from the Subsurface Leak Resulting in Pool accident analysis.
XS-01-TEMP02	Release of steam-aerosol from transfer piping in pump pit due to steam hammer and resulting pipe damage	Extended recirculation and consequential heating of saltwell liquid with sudden opening of valve when cover block is in place	None	None	SC: Trans Sys Cvrs SC: Trans Sys Supplemental Cvrs SC: Trans Sys Leak Detect	LCO: Trans Sys Cvrs LCO: Trans Sys Leak Detect JCO: Supplemental Cvrs	This control addresses this hazardous condition by indicating leakage and minimizing exposure. Liquid flashing to steam in not credible.

Table 5.4-2. Safety Structures, Systems, and Components and Technical Safety Requirements for Potential S1 Consequences with F3 Frequency. (47 Sheets)

ID	Hazardous Condition	Cause	Preventive SSCs	Preventive TSRs	Mitigative SSCs	Mitigative TSRs	Memo
XS-02-FLOW06	Release of liquid radioactive waste from DCRT due to overflowing of PFP sending tank (in facility)	Reverse flow caused by jumper misalignment	None	AC: Trans Cntrls (Mis-routing)	None	None	This control addresses this hazardous condition by preventing mis-routing.
XS-03-LEVE	Release of radioactive liquids from DCRT "annulus" (vault) due to DCRT leak	Corrosion or structural failure of DCRT or associated piping	None	None	SC: Trans Sys Cvrs SC: Trans Leak Detect Syss SS: Tank Level Detect Sys SS: Salt Well Flow Totalizer	LCO: Trans Sys Cvrs LCO: Trans Leak Detect Syss AC: Trans Cntrls (Mis-routing) AC: Trans Pump Admin Lock Cntrls AC: Trans Sys Cvr Removal Cntrls AC: Trans Cntrls (Material Balance)	These controls address this hazardous condition for worker risk from a Subsurface Leak Resulting in Pool by indicating leak and minimizing releases. These are also applicable controls from the Subsurface Leak Resulting in Pool accident analysis for environmental concerns. (DCRTs normally only contain waste during transfers)
XS-03-PRES01	Release of toxic vapors from DCRT due to increased concentrations in DCRT atmosphere	Tank isolated from forced ventilation with gas evolution	None	None	None	None	No applicable SSCs or TSRs - Facility worker exposure controlled by Health & Safety Plan.
XS-03-PRES01A	Release of radioactive aerosols from DCRT headspace due to positive pressure	Loss of ventilation flow due to failure of ventilation fans causes positive pressure in tank	None	AC: HEPA Filter Cntrls (Filter Efficiency 244-S, TX, and A only)	SC: Trans Sys Cvrs SS: HEPA Filters	AC: HEPA Filter Cntrls (Source Term) AC: Trans Sys Cvrs	These controls address this hazardous condition by inspection of HEPA filters and cover block status.
XS-03-PRES02	Release of radioactive aerosols from DCRT headspace due to positive pressure	Dampers inadvertently closed causing positive pressure in tank	None	AC: HEPA Filter Cntrls (Filter Efficiency 244-S, TX, and A only)	SC: Trans Sys Cvrs SS: HEPA Filters	AC: HEPA Filter Cntrls (Source Term) AC: Trans Sys Cvrs	These controls address this hazardous condition by inspection of HEPA filters and cover block status.
XS-03-PRES03	Release of radioactive aerosols from DCRT headspace due to positive pressure in DCRT	Ductwork damage due to external event causes positive pressure in DCRT	None	AC: HEPA Filter Cntrls (Filter Efficiency 244-S, TX, and A only)	SC: Trans Sys Cvrs SS: HEPA Filters	AC: HEPA Filter Cntrls (Source Term) AC: Trans Sys Cvrs	These controls address this hazardous condition by inspection of HEPA filters and cover block status.

Table 5.4-2. Safety Structures, Systems, and Components and Technical Safety Requirements for Potential S1 Consequences with F3 Frequency. (47 Sheets)

ID	Hazardous Condition	Cause	Preventive SSCs	Preventive TSRs	Mitigative SSCs	Mitigative TSRs	Memo
XS-03-PRES04	Release of radioactive aerosols from DCRT headspace due to positive pressure	Loss of power causes positive pressure in tank	None	AC: HEPA Filter Cntrls (Filter Efficiency 244-S, TX, and A only)	SC: Trans Sys Cvrs SS: HEPA Filters	AC: HEPA Filter Cntrls (Source Term) AC: Trans Sys Cvrs	These controls address this hazardous condition by inspection of HEPA filters and cover block status.
XS-03-TEMP05	Release of radioactive aerosols from DCRT headspace due to positive pressure	Excessive agitation-pumping causes positive pressure and generates aerosols	None	AC: HEPA Filter Cntrls (Filter Efficiency 244-S, TX, and A only)	SC: Trans Sys Cvrs SS: HEPA Filters	AC: HEPA Filter Cntrls (Source Term) AC: Trans Sys Cvrs	These controls address this hazardous condition by inspection of HEPA filters and cover block status.
XS-03-TEMP06	Release of toxic vapors from DCRT headspace due to positive pressure in DCRT	Excessive agitation-pumping causes positive pressure	None	AC: HEPA Filter Cntrls (Filter Efficiency 244-S, TX, and A only)	SC: Trans Sys Cvrs SS: HEPA Filters	AC: HEPA Filter Cntrls (Source Term) AC: Trans Sys Cvrs	These controls address this hazardous condition by inspection of HEPA filters and cover block status.
XS-03-TEMP07	Release of radioactive aerosols from DCRT headspace due to positive pressure	Loss of ventilation flow due to HEPA filter blockage in cold weather causes positive pressure in tank	None	AC: HEPA Filter Cntrls (Filter Efficiency 244-S, TX, and A only)	SC: Trans Sys Cvrs SS: HEPA Filters	AC: HEPA Filter Cntrls (Source Term) AC: Trans Sys Cvrs	These controls address this hazardous condition by inspection of HEPA filters and cover block status.
XS-03-TEMP08	Release of radioactive aerosols from DCRT headspace due to positive pressure	Loss of ventilation flow plus high heat waste causes positive pressure in tank	None	AC: HEPA Filter Cntrls (Filter Efficiency 244-S, TX, and A only)	SC: Trans Sys Cvrs SS: HEPA Filters	AC: HEPA Filter Cntrls (Source Term) AC: Trans Sys Cvrs	These controls address this hazardous condition by inspection of HEPA filters and cover block status.
XS-06-FLOW06	Release of radioactive aerosols from DCRT annulus due to a spill of radioactive liquid	Overfilling DCRT due to a misrouting causes spill into DCRT annulus	None	AC: Trans Cntrls (Leak Prevention/ Detect/Cntrl)	SC: Trans Leak Detect Syss SC: Trans Sys Cvrs	LCO: Trans Sys Cvrs AC: Trans Cntrls (Leak Prevention/ Detect/Cntrl) AC: Trans Pump Admin Lock Cntrls	These controls address this hazardous condition by indicating leak and minimizing exposure.
XS-12-FLOW01	Release of toxic gas from diversion box due to accumulation of toxic vapors from catch tank	Chemical reaction of catch tank material with backflow of vapors via diversion box drain line	None	None	None	None	No applicable SSCs or TSRs - Facility worker exposure controlled by Health & Safety Plan.

Table 5.4-2. Safety Structures, Systems, and Components and Technical Safety Requirements for Potential S1 Consequences with F3 Frequency. (47 Sheets)

ID	Hazardous Condition	Cause	Preventive SSCs	Preventive TSRs	Mitigative SSCs	Mitigative TSRs	Memo
XS-12-FLOW04	Release of toxic gas from diversion box due to accumulation of toxic vapors from catch tank	Radiolysis of catch tank material with backflow of vapors via diversion box drain line	None	None	None	None	No applicable SSCs or TSRs - Facility worker exposure controlled by Health & Safety Plan.
XS-12-FLOW06	Release of radioactive waste to the soil from diversion box drain due to a spill of radioactive liquid into 241-U-152 diversion box	Leak of diversion box drain line upstream of catch tank	None	AC: Trans Cntrls (Leak Prevention and Mis-routing) AC: Trans Pump Admin Lock Cntrls	SC: Trans Sys Cvrs SC: Trans Leak Detect Syss SS: Salt Well Flow Totalizer SS: Tank Level Detect Sys	LCO: Trans Sys Cvrs LCO: Trans Leak Detect Syss AC: Trans Cntrls (Mis-rout) AC: Trans Pump Admin Lock Cntrls AC: Trans Sys Cvr Removal Cntrls AC: Trans Cntrls (Leak Detect/Cntrl) AC: Emergency Prep (Significant Release)	These are applicable controls from the Subsurface Leak Resulting in Pool accident analysis. These controls also address this hazardous condition for worker risk by indicating leak and minimizing releases.
XS-26-PRES01A 102AW-02-PRES	Release of radioactive aerosols from Tank 241-SY-102 due to positive pressure	Blockage of exhaust path causes pressure in tank	SC: DST/AWF Ventilation	LCO: DST and AWF Tank Ventilation Syss AC: Flammability Cntrls (Pressurization)	SC: Trans Sys Cvrs	LCO: Trans Sys Cvrs AC: Trans Sys Cvr Removal Cntrls (Tracking)	These controls address this hazardous condition by monitoring ventilation operation and cover block status.
XS-26-PRES02A 102AW-02-PRES	Release of radioactive aerosols from Tank 241-SY-102 due to positive pressure	Failure of ventilation fans causes pressure in tank	SC: DST/AWF Ventilation	LCO: DST and AWF Tank Ventilation Syss AC: Flammability Cntrls (Pressurization)	SC: Trans Sys Cvrs	LCO: Trans Sys Cvrs AC: Trans Sys Cvr Removal Cntrls (Tracking)	These controls address this hazardous condition by monitoring ventilation operation and cover block status.
XS-26-PRES03	Release of radioactive aerosols from Tank 241-SY-102 due to positive pressure	Use of hot water to decontaminate equipment in tank atmosphere - generate aerosols and pressurizes the tank	SC: DST/AWF Ventilation	LCO: DST and AWF Tank Ventilation Syss AC: Flammability Cntrls (Pressurization)	SC: Trans Sys Cvrs	LCO: Trans Sys Cvrs AC: Trans Sys Cvr Removal Cntrls (Tracking)	These controls address this hazardous condition by monitoring ventilation operation and cover block status.
XS-26-PRES03 102AW-02-PRES	Release of radioactive aerosols from Tank 241-SY-102 due to positive pressure	Loss of power to ventilation system causes positive pressure in tank	SC: DST/AWF Ventilation	LCO: DST and AWF Tank Ventilation Syss AC: Flammability Cntrls (Pressurization)	SC: Trans Sys Cvrs	LCO: Trans Sys Cvrs AC: Trans Sys Cvr Removal Cntrls (Tracking)	These controls address this hazardous condition by monitoring ventilation operation and cover block status.

Table 5.4-2. Safety Structures, Systems, and Components and Technical Safety Requirements for Potential S1 Consequences with F3 Frequency. (47 Sheets)

ID	Hazardous Condition	Cause	Preventive SSCs	Preventive TSRs	Mitigative SSCs	Mitigative TSRs	Memo
XS-41B-LEVE02	Release of toxic gas from vent station access pit via valve operator seals due to liquid accumulation in vent station nozzle pit	Overflow of vent station catch tank into nozzle pit causes tank gas accumulation	SC: Trans Leak Detect Syss	LCO: Trans Leak Detect Syss AC: Trans Pump Admin Lock Cntrls AC: Trans Cntrls (Leak Prevention/ Detect/Cntrl)	None	None	These controls address this hazardous condition by notifying personnel of leak.
XS-41B-LEVE04	Release of radioactive liquid from vent station access pit via valve operator seals due to liquid accumulation in vent station nozzle pit	Overflow of vent station catch tank into nozzle pit	SC: Trans Leak Detect Syss	LCO: Trans Leak Detect Syss AC: Trans Pump Admin Lock Cntrls AC: Trans Cntrls (Leak Prevention/ Detect/Cntrl)	None	None	These controls address this hazardous condition by notifying personnel of leak.
XS-41C-LEVE03	Release of toxic gas from vent station catch tank pit due to presence of liquid waste in pit	Backflow from cross-site piping encasement leak causes tank gas accumulation	None	None	SC: Trans Sys Cvrs SC: Trans Sys Supplemental Cvrs SC: Trans Leak Detect Syss	LCO: Trans Sys Cvrs LCO: Trans Leak Detect Syss AC: Trans Cntrls (Mis-routing) AC: Trans Pump Admin Lock Cntrls AC: Trans Sys Cvr Removal Cntrls JCO: Supplemental Cvrs	These controls address this hazardous condition by indicating leak and minimizing releases.

Table 5.4-3. Safety Structures, Systems, and Components and Technical Safety Requirements for Potentially Severe (E3 and E2) Environmental Consequences. (107 Sheets)

ID	Hazardous Condition	Cause	Preventive SSCs	Preventive TSRs	Mitigative SSCs	Mitigative TSRs	Memo	Env Cons
ABBREVIATION LIST: Admin = Administrative Cons = Consequence Cntrls = Controls Detect = Detection Ign = Ignition Mon = Monitoring Prep = Preparedness Sys = Systems Trans = Transfer TSR = Technical Safety Requirement								
102AW-01-FLOW 102AW-02-PRES	Release of liquids, solids and/or vapors from Tank 241-AW-102 due to dome collapse caused by chemical reaction of incompatible wastes	Misrouting to destination other than intended creates chemical incompatibility	None required	None required	None required	None required	No controls required based on low accident frequency.	E3
102AW-01-TEMP	Release of liquid radioactive waste aerosols from transfer pipe to Tank 241-AW-102 due to spray leak of liquid waste from transfer pipe leak	Piping leak due to exceeding the design temperature of the pipe by transferring high temperature waste	None required	AC: Trans Cntrls (Mis-routing) AC: Trans Pump Admin Lock Cntrls	SC: Trans Sys Cvrs	LCO: Trans Sys Cvrs AC: Trans Sys Cvr Removal Cntrls	Controls based on accident analysis (Spray Leak in Structure or from Overground Waste Transfer Lines).	E3
102AW-02-LEVE02	Release of liquid radioactive waste from Tank 241-AW-102 due to leak of primary and secondary tank	Structural failure of primary tank when annulus leaks	None	None	SC: Primary Tank Leak Detect Syss SS: Tank Level Syss	LCO: Primary Tank Leak Detect Syss	These are applicable controls from the Flammable Gas Deflagrations - DST accident analysis.	E3
102AW-02-LEVE06	Release of radioactive liquid to soil column from Tank 241-AW-102 annulus due to leakage	Primary tank leakage from various causes combined with annulus leakage	None	None	SC: Primary Tank Leak Detect Syss SS: Tank Level Syss	LCO: Primary Tank Leak Detect Syss	These are applicable controls from the Flammable Gas Deflagrations - DST accident analysis.	E3
102AW-02-PRES03	Release of liquids, solids and/or vapors from Tank 241-AW-102 due to dome collapse caused by excessive vacuum	Blocked ventilation inlet causes excessive vacuum leading to dome collapse	None required	None required	None required	None required	No controls required based on accident analysis (Tank Failure Due to Excessive Loads).	E3
102AW-02-PRES04	Release of liquids, solids and/or vapors from Tank 241-AW-102 due to dome collapse caused by excessive vacuum	Condensation of vapors causes excessive vacuum leading to dome collapse	None required	None required	None required	None required	No controls required based on accident analysis (Tank Failure Due to Excessive Loads).	E3
102AW-02-PRES05	Release of liquids, solids and/or vapors from Tank 241-AW-102 due to dome collapse caused by excessive vacuum	Sub-cooling of vapor during equipment flushing causes excessive vacuum leading to dome collapse	None required	None required	None required	None required	No controls required based on accident analysis (Tank Failure Due to Excessive Loads).	E3

Table 5.4-3. Safety Structures, Systems, and Components and Technical Safety Requirements for Potentially Severe (E3 and E2) Environmental Consequences. (107 Sheets)

ID	Hazardous Condition	Cause	Preventive SSCs	Preventive TSRs	Mitigative SSCs	Mitigative TSRs	Memo	Env Cons
102AW-02-PRES06	Release of liquids, solids and/or vapors from Tank 241-AW-102 due to dome collapse caused by excessive vacuum	Ventilation imbalance causes excessive vacuum leading to dome collapse	None required	None required	None required	None required	No controls required based on accident analysis (Tank Failure Due to Excessive Loads).	E3
102AW-02-PRES07	Release of liquids, solids and/or vapors from Tank 241-AW-102 due to dome collapse caused by excessive vacuum	Wrong size portable ventilator chosen for support work causes excessive vacuum leading to dome collapse	None required	None required	None required	None required	No controls required based on accident analysis (Tank Failure Due to Excessive Loads).	E3
102AW-03-LEVE03	Release of liquids, solids and/or vapors from Tank 241-AW-102 due to dome collapse caused by floating the primary tank within the annulus	Misrouting of liquid waste to the annulus causes floating of primary tank and subsequent dome collapse	None required	None required	None required	None required	No controls required based on accident analysis (Tank Failure Due to Excessive Loads).	E3
102AW-03-TEMP01	Release of liquids, solids and/or vapors from Tank 241-AW-102 due to dome collapse caused by an fire/ explosion in the annulus	Fire/Explosion of flammable liquid spilled into annulus via a riser	None required	AC: Ign Cntrls (Vehicles)	None required	AC: Emergency Prep (In-tank Fuel Fire)	Controls based on accident analysis (In-Tank Fuel Fire/ Deflagration).	E3
102AW-04-STRU01A	Release of liquids, solids and/or vapors from Tank 241-AW-102 due to dome collapse caused by excessive dome loading	Equipment drop during crane work causes excessive dome loading	None required	AC: Dome Loading Cntrls (Lifting Cntrls)	None required	None required	Controls based on accident analysis (Tank Failure Due to Excessive Loads).	E3
102AW-04-STRU02	Release of liquids, solids and/or vapors from Tank 241-AW-102 due to dome collapse caused by excessive dome loading	Violation of limits on dome loading	None required	AC: Dome Loading Cntrls (Excessive Loads)	None required	None required	Controls based on accident analysis (Tank Failure Due to Excessive Loads).	E3
102AW-09-COMP01	Release of combustion product aerosols from Tank 241-AW-102 due to fire in separable organic layer in waste tank causing dome collapse	Organic reaching flash point or being aerosolized plus ignition source	None required	AC: Ign Cntrls (Organic Solvent) AC: Trans Cntrls (Organic Solvent)	None required	AC: HEPA Filter Cntrl (Source Term) AC: Emergency Prep Program (Organic Solvent)	Controls based on accident analysis (Organic Solvent Fire).	E3

Table 5.4-3. Safety Structures, Systems, and Components and Technical Safety Requirements for Potentially Severe (E3 and E2) Environmental Consequences. (107 Sheets)

ID	Hazardous Condition	Cause	Preventive SSCs	Preventive TSRs	Mitigative SSCs	Mitigative TSRs	Memo	Env Cons
102AW-09-COMP02	Release of radioactive waste aerosols from Tank 241-AW-102 due to fire in fuel spilled in waste tank causing dome collapse	Spill of fuel from external source plus fuel reaching flash point or being aerosolized plus ignition source	None required	AC: Ign Cntrls (Vehicles)	None required	AC: Emergency Prep (In-tank Fuel Fire)	Controls based on accident analysis (In-Tank Fuel Fire/ Deflagration).	E3
102AW-13-FLOW01	Release of radioactive waste aerosols due to spray leak of waste from flush pit	Backflow of waste to flush pit with valve or pipe leak and cover block off	SC: Pressure Switch Interlocks or Alarms (Water Service Lines) SS: Backflow Prevention Devices	LCO: Service Water Pressure Detect Syss AC: Trans Pump Admin Lock Cntrls AC: Trans Cntrls (Mis-routing)	SC: Trans Sys Cvrs	LCO: Trans Sys Cvrs AC: Trans Sys Cvr Removal Cntrls	Controls based on accident analysis (Spray Leak in Structure or from Overground Waste Transfer Lines).	E3
102S-03.b4	Release of radioactive aerosols to atmosphere from Tank 241-S-102 due to burning fuel flowing into waste tank causing dome collapse	Vehicle drives into open riser puncturing gas tank + Ignition + Flammable organic vapors in tank	None required	AC: Ign Cntrls (Vehicles)	None required	AC: Emergency Prep (In-tank Fuel Fire)	Controls based on accident analysis (In-Tank Fuel Fire/ Deflagration).	E3
102S-04.c	Release of radioactive aerosols contained in Tank 241-S-102 vapor space to atmosphere due to ignition of flammable gas in tank causing HEPA failure	Concentration of H2 or Ammonia (or other flammable gasses) above LFL + Ignition source	SC: SST Ventilation	LCO: SST Ventilation Syss AC: Ign Cntrls AC: Flammable Gas Mon Cntrls	None required	AC: HEPA Filter Cntrls (Source Term)	Controls based on BIO Appendix E; and accident analysis (HEPA Filter Failure - Exposure to High Temperature or Pressure).	E3
102S-04.d1	Release of radioactive aerosols contained in Tank 241-S-102 vapor space to the atmosphere due to low pressure causing dome collapse	Misoperation of exhauster during saltwell pumping	None required	None required	None required	None required	No controls required based on accident analysis (Tank Failure Due to Excessive Loads).	E3
102S-04.e3	Release of radioactive aerosols contained in Tank 241-S-102 vapor space to atmosphere due to generation of excessive heat leading to dome collapse	Addition of incompatible waste/chemical (misroute)	None required	None required	None required	None required	No controls required based on low accident frequency.	E3

Table 5.4-3. Safety Structures, Systems, and Components and Technical Safety Requirements for Potentially Severe (E3 and E2) Environmental Consequences. (107 Sheets)

ID	Hazardous Condition	Cause	Preventive SSCs	Preventive TSRs	Mitigative SSCs	Mitigative TSRs	Memo	Env Cons
102S-05.a1a	Release of radioactive aerosols from Tank 241-S-102 to atmosphere due to dome collapse	Excess gravel overburden	None required	AC: Dome Loading Cntrls (Excessive Loads)	None required	None required	Controls based on accident analysis (Tank Failure Due to Excessive Loads).	E3
102S-05.a1aa	Release of radioactive aerosols from Tank 241-S-102 to atmosphere due to dome collapse	Large vehicle traffic over tank	None required	AC: Dome Loading Cntrls (Excessive Loads)	None required	None required	Controls based on accident analysis (Tank Failure Due to Excessive Loads).	E3
102S-05.a2	Release of radioactive aerosols from Tank 241-S-102 to atmosphere due to dome collapse	Seismic event (common mode failure)	None required	None required	None required	AC: Emergency Prep (Seismic)	Controls based on accident analysis (Natural Phenomena - Seismic).	E3
102S-05.a3	Release of radioactive aerosols from Tank 241-S-102 to atmosphere due to dome collapse	Past thermocycling of tank	None required	None required	None required	None required	No controls required based on accident analysis (Tank Failure Due to Excessive Loads).	E3
102S-05.a3a	Release of radioactive aerosols from Tank 241-S-102 to atmosphere due to dome collapse	Long term aging	None required	None required	None required	None required	No controls required based on accident analysis (Tank Failure Due to Excessive Loads).	E3
106C-01A	Release of radioactive and/or hazardous material from Tank 241-C-106, structural damage and dome collapse due to tank low pressure	Air inlet plugged due to icing/dust	None required	None required	None required	None required	No controls required based on accident analysis (Tank Failure Due to Excessive Loads).	E3
106C-01B	Release of radioactive and/or hazardous material from Tank 241-C-106, structural damage and dome collapse due to tank low pressure	Inlet air valve closed	None required	None required	None required	None required	No controls required based on accident analysis (Tank Failure Due to Excessive Loads).	E3

Table 5.4-3. Safety Structures, Systems, and Components and Technical Safety Requirements for Potentially Severe (E3 and E2) Environmental Consequences. (107 Sheets)

ID	Hazardous Condition	Cause	Preventive SSCs	Preventive TSRs	Mitigative SSCs	Mitigative TSRs	Memo	Env Cons
106C-01C	Release of radioactive and/or hazardous material from Tank 241-C-106, structural damage, and dome collapse due to tank low pressure	Exhauster damper positioned incorrectly	None required	None required	None required	None required	No controls required based on accident analysis (Tank Failure Due to Excessive Loads).	E3
106C-01D	Release of radioactive and/or hazardous material from Tank 241-C-106, structural damage and dome collapse due to tank low pressure	Wrong sized portable exhauster	None required	None required	None required	None required	No controls required based on accident analysis (Tank Failure Due to Excessive Loads).	E3
106C-01E	Release of radioactive and/or hazardous material from Tank 241-C-106, structural damage and dome collapse due to tank low pressure	Subcooling of tank vapor space due to water addition of flushing	None required	None required	None required	None required	No controls required based on accident analysis (Tank Failure Due to Excessive Loads).	E3
106C-01I	Release of radioactive and/or hazardous material from Tank 241-C-106 due to possible dome collapse caused by tank high pressure	Fire in waste tank	SC: SST Ventilation	LCO: SST Waste Temperature Cntrl AC: Flammability Cntrls AC: Ign Cntrls AC: Flammable Gas Mon Cntrls AC: Ign Cntrls (Lightning)	None required	None required	Controls based on BIO Appendix E; and accident analysis (Natural Phenomena - Lightning).	E3
106C-01J	Release of radioactive and/or hazardous material from Tank 241-C-106 due to high pressure in tank and possible dome collapse	Fire/explosion in waste tank	SC: SST Ventilation	LCO: SST Waste Temperature Cntrl AC: Flammability Cntrls AC: Ign Cntrls AC: Flammable Gas Mon Cntrls AC: Ign Cntrls (Lightning)	None required	None required	Controls based on BIO Appendix E; and accident analysis (Natural Phenomena - Lightning).	E3

Table 5.4-3. Safety Structures, Systems, and Components and Technical Safety Requirements for Potentially Severe (E3 and E2) Environmental Consequences. (107 Sheets)

ID	Hazardous Condition	Cause	Preventive SSCs	Preventive TSRs	Mitigative SSCs	Mitigative TSRs	Memo	Env Cons
106C-01Ra	Release of radioactive and/or hazardous material from Tank 241-C-106, due to high dT in tank from cold water addition resulting in thermal stress and cracks causing tank leaks	Water addition temperature cold	None	None	SS: Tank Level Detect Sys	None	These are applicable controls from the Subsurface Leak Remaining Subsurface accident analysis.	E3
106C-01Sa	Release of radioactive and/or hazardous material from Tank 241-C-106, due to low tank level because of tank leak	Waste tank leak	SS: Temperature Mon	LCO: SST Waste Temperature Cntrls	SS: Tank Level Detect Sys SS: Temperature Mon	LCO: SST Waste Temperature Cntrls	These are applicable controls from the Tank Bump accident analysis. Temperature monitoring prevents one possible tank failure cause and is a possible indicator of tank leak (tank heat-up). Facility worker exposure controlled by Radiation Protection Program.	E3
106C-01X	Release of radioactive and/or hazardous material from Tank 241-C-106, dome structural damage and/or personnel injury due to overload of tank dome	Overweight vehicles over top of tank	None required	AC: Dome Loading Cntrls (Excessive Loads)	None required	None required	Controls based on accident analysis (Tank Failure Due to Excessive Loads).	E3
106C-01Y	Release of radioactive and/or hazardous material from Tank 241-C-106, dome structural damage and/or personnel injury due to overload of tank dome	Flooding over top of tank	SS: Service Water Flow Totalizer	LCO: Tank Service Water Intrusion Mon Program	None required	None required	Controls based on accident analyses (Surface Leak Resulting in Pool).	E3
106C-02A	Release of radioactive and/or hazardous material from Tank 241-C-106 due to dome collapse caused by ignition of high flammable gas content in tank	High waste temperature	SC: SST Ventilation SS: Temperature Mon	LCO: SST Waste Temperature Cntrl LCO: SST Ventilation Syss AC: Flammability Cntrls AC: Ign Cntrls AC: Flammable Gas Mon Cntrls	None required	None required	Controls based on BIO Appendix E. Auto-ignition temperature of H2 at LFL is 400 C.	E3

Table 5.4-3. Safety Structures, Systems, and Components and Technical Safety Requirements for Potentially Severe (E3 and E2) Environmental Consequences. (107 Sheets)

ID	Hazardous Condition	Cause	Preventive SSCs	Preventive TSRs	Mitigative SSCs	Mitigative TSRs	Memo	Env Cons
106C-02B	Release of radioactive and/or hazardous material from Tank 241-C-106 due to ignition of high flammable gas content in tank and possible dome collapse	Ventilation system failure	None required	AC: Flammability Cntrls AC: Ign Cntrls AC: Flammable Gas Mon Cntrls AC: Ign Cntrls (Lightning)	None required	None required	Controls based on BIO Appendix E; and accident analysis (Natural Phenomena - Lightning).	E3
106C-02C	Release of radioactive and/or hazardous material from Tank 241-C-106 due to dome collapse caused by ignition of high flammable gas content in tank	Tank burp, release of trapped gas	SC: SST Ventilation	LCO: SST Ventilation Syss AC: Flammability Cntrls AC: Ign Cntrls AC: Flammable Gas Mon Cntrls AC: Ign Cntrls (Lightning)	None required	None required	Controls based on BIO Appendix E; and accident analysis (Natural Phenomena - Lightning).	E3
106C-04B	Release of radioactive and/or hazardous material from Tank 241-C-106 due to fire/ explosion caused by ignition of flammable gas released from radiolysis in tank sludge	Radiolysis in sludge layer allows release of trapped gas to vapor space	SC: SST Ventilation	LCO: SST Ventilation Syss AC: Flammability Cntrls AC: Ign Cntrls AC: Flammable Gas Mon Cntrls AC: Ign Cntrls (Lightning)	None required	None required	Controls based on BIO Appendix E; and accident analysis (Natural Phenomena - Lightning).	E3
106C-10J	Release of radioactive and/or hazardous material from Tank 241-C-106 due to tank structural damage, HEPA damage caused by high temperature	Fire in or around ventilation sys	None required	None required	SS: Ventilation CAM Interlock Syss	LCO: Ventilation Stack CAM Interlock Syss AC: HEPA Filter Cntrls (Source Term)	Controls based on accident analysis (HEPA Filter Failure - Exposure to High Temperature or Pressure).	E3
106C-12G	Release of radioactive and/or hazardous material from Tank 241-C-106 due to high dT in tank because cold water addition caused thermal stress and cracks resulting in tank leaks	Tank truck water temperature cold	None	None	SS: Tank Level Detect Sys	None	These are applicable controls from the Subsurface Leak Remaining Subsurface accident analysis.	E3

Table 5.4-3. Safety Structures, Systems, and Components and Technical Safety Requirements for Potentially Severe (E3 and E2) Environmental Consequences. (107 Sheets)

ID	Hazardous Condition	Cause	Preventive SSCs	Preventive TSRs	Mitigative SSCs	Mitigative TSRs	Memo	Env Cons
106C-13A	Release of radioactive and/or hazardous material from Tank 241-C-106 due to possible dome collapse, tank damage caused by high temperature	Fire in Tank 241-C-105 propagates into Tank 241-C-106	SC: SST Ventilation	LCO: SST Ventilation Syss AC: Flammability Cntrls AC: Ign Cntrls AC: Flammable Gas Mon Cntrls AC: Ign Cntrls (Lightning)	None required	None required	Controls based on BIO Appendix E and accident analysis (Natural Phenomena - Lightning).	E3
114SX-04.a.2	Radioactive aerosols released from failed tank dome due to vacuum produced by valving error.	Human error: Valve out flammable watch list (Tank 241-SX-109) butterfly valve	None required	None required	None required	None required	No controls required based on accident analysis (Tank Failure Due to Excessive Loads).	E3
114SX-04.a.3	Release of radioactive aerosols from Tank 241-SX-114 to atmosphere due to high temperatures causing dome concrete strength loss	No ventilation flow High ambient temperature conditions Resulting in tank degradation	None required	None required	None required	None required	No controls required based on accident analysis (Tank Failure Due to Excessive Loads).	E3
114SX-04.b.1.a.2	Release of radioactive material from Tank 241-SX-114 to atmosphere due to high temperature in the dome leading to dome collapse (long term closure of butterfly valve)	Human error: Closure of Tank 241-SX-114 exhaust butterfly valve isolating tank from exhaust plenum Resulting in tank degradation	None required	None required	None required	None required	No controls required based on accident analysis (Tank Failure Due to Excessive Loads).	E3
114SX-04.b.1.b.2 a	Release of radioactive aerosols to atmosphere from Tank 241-SX-114 waste due to heat induced tank dome collapse	Ducting failure due to bad welds	None required	None required	None required	None required	No controls required based on accident analysis (Tank Failure Due to Excessive Loads).	E3

Table 5.4-3. Safety Structures, Systems, and Components and Technical Safety Requirements for Potentially Severe (E3 and E2) Environmental Consequences. (107 Sheets)

ID	Hazardous Condition	Cause	Preventive SSCs	Preventive TSRs	Mitigative SSCs	Mitigative TSRs	Memo	Env Cons
114SX-04.b.1.b.2 b	Release of radioactive aerosols to atmosphere from Tank 241-SX-114 waste due to heat induced tank dome collapse	Ducting failure due to seismic activity coupled with failure to respond Resulting in tank degradation	None required	None required	None required	AC: Emergency Prep (Seismic)	Controls based on accident analysis (Natural Phenomena - Seismic).	E3
114SX-04.b.1.c.2	Release of radioactive aerosols to atmosphere from Tank 241-SX-114 waste due to dome collapse	Exhauster failure Fan failure Filter rupture (low differential pressure shutdown) Resulting in tank degradation	None required	None required	None required	None required	No controls required based on accident analysis (Tank Failure Due to Excessive Loads).	E3
114SX-04.b.1.d.2	Release of radioactive aerosols from Tank 241-SX-114 waste to atmosphere due to dome collapse	Filter plugging results in lack of heat removal with high temperatures degrading dome strength	None required	None required	None required	None required	No controls required based on accident analysis (Tank Failure Due to Excessive Loads).	E3
114SX-05.b.1	Release of radioactive aerosols from Tank 241-SX-114 waste to atmosphere due to flammable gas ignition resulting in dome collapse	Radiolysis creating bubbles of gases in waste	SC: SST Ventilation	LCO: SST Ventilation Syss AC: Flammability Cntrls AC: Ign Cntrls AC: Flammable Gas Mon Cntrls AC: Ign Cntrls (Lightning)	None required	None required	Controls based on BIO Appendix E; and accident analysis (Natural Phenomena - Lightning).	E3
114SX-05.b.3	Release of radioactive aerosols from Tank 241-SX-114 waste to atmosphere due to dome collapse caused by sudden vacuum in tank	Quenching (adding cold liquid to hot tank contents) creating a vacuum	None required	None required	None required	None required	No controls required based on accident analysis (Tank Failure Due to Excessive Loads).	E3
114SX-05.c.2b	Release of radioactive aerosols from Tank 241-SX-114 waste to atmosphere due to dome collapse	Chemical reaction caused by addition of chemical/ solution. Resulting in tank degradation	None required	None required	None required	None required	No controls required based on accident analysis (Tank Failure Due to Excessive Loads).	E3

Table 5.4-3. Safety Structures, Systems, and Components and Technical Safety Requirements for Potentially Severe (E3 and E2) Environmental Consequences. (107 Sheets)

ID	Hazardous Condition	Cause	Preventive SSCs	Preventive TSRs	Mitigative SSCs	Mitigative TSRs	Memo	Env Cons
114SX-06.a.1a	Release of radioactive aerosols from Tank 241-SX-114 waste to atmosphere due to dome collapse	Gravel overburden Large vehicle	None required	AC: Dome Loading Cntrls (Excessive Loads)	None required	None required	Controls based on accident analysis (Tank Failure Due to Excessive Loads).	E3
114SX-06.a.1b	Release of radioactive aerosols from Tank 241-SX-114 waste to atmosphere as a result of a dome collapse	Deflagration of H2 (Implies gas generation with spark)	SC: SST Ventilation	LCO: SST Ventilation Syss AC: Flammability Cntrls AC: Ign Cntrls AC: Flammable Gas Mon Cntrls AC: Ign Cntrls (Lightning)	None required	None required	Controls based on BIO Appendix E; and accident analysis (Natural Phenomena - Lightning).	E3
114SX-06.a.3	Release of radioactive aerosols from Tank 241-SX-114 waste to the atmosphere due to dome collapse caused by loss of strength due to aging	Long term aging resulting in tank degradation	None required	None required	None required	None required	No controls required based on accident analysis (Tank Failure Due to Excessive Loads).	E3
244AR-02.a.14	Release of radioactive aerosols from waste contained in tanks (4) and building due to earthquake	Seismic event collapses building and four tanks	None required	None required	None required	AC: Emergency Prep (Seismic)	Controls based on accident analysis (Natural Phenomena - Seismic).	E3
CCF-16	Subsurface releases of radioactive or hazardous material due to leaks in multiple tanks	Tanks, tank penetrations and tank components deteriorate due to corrosion	SC: Temperature Mon	LCO: SST Waste Temperature Cntrols AC: Trans Cntrls (pH)	SC: Primary Tank Leak Detect SS: Tank Level Detect Sys SC: Temperature Mon	LCO: Primary Tank Leak Detect Syss LCO: SST Waste Temperature Cntrls	These are applicable controls from the Flammable Gas Deflagrations - DST accident analysis. Temperature monitoring prevents one possible tank failure cause and is a possible indicator of tank leak (tank heat-up). PH control on transfers to tank farm maintain tank waste pH.	E3

Table 5.4-3. Safety Structures, Systems, and Components and Technical Safety Requirements for Potentially Severe (E3 and E2) Environmental Consequences. (107 Sheets)

ID	Hazardous Condition	Cause	Preventive SSCs	Preventive TSRs	Mitigative SSCs	Mitigative TSRs	Memo	Env Cons
CCF-17	Release of radioactive and hazardous materials from tank due to dome collapse	Corrosion of rebar in concrete SST domes	None required	None required	None required	None required	No controls required based on accident analysis (Tank Failure Due to Excessive Loads).	E3
CCF-18	Release of radioactive and hazardous materials from tanks due to dome collapses	Fire in tank propagates to connecting tank and both tanks collapse during cooldown from negative tank pressure	None required	None required	None required	None required	No controls required based on accident analysis (Organic Solvent Fire/Organic Salt-Nitrate Reaction) which shows that tank will not collapse.	E3
CCF-19	Release of radioactive and hazardous materials from tanks due to dome collapses	Fire in tank causes pressure transient that leads to GRE in connecting tank with subsequent fire and tank collapses from negative tank pressure	None required	None required	None required	None required	No controls required based on extremely low accident frequency.	E3
CP-GRT-02	Release of radioactive or toxic material to soil surface (pool) from transfer line due to puncture of line during transfer	Human error AND Mechanical failure of push pipe integrity inside the transfer line	None required	AC: Excavation Cntrls	None required	None required	Controls based on accident analysis (Spray Leak From Underground Waste Transfer Lines)	E3
CP-MSP-02	Release of radioactive or toxic material to soil (plume) remaining subsurface from transfer line due to puncture of line during transfer	Human error caused puncture to transfer line during push operations	None	AC: Excavation Cntrls	SC: Pipe Encasements SC: Trans Leak Detect Syss SS: Tank Level Detect Syss SS: Salt Well Flow Totalizers	LCO: Trans Leak Detect Syss AC: Trans Cntrls AC: Emergency Prep (Significant Release)	Controls based on accident analysis. (Subsurface Leak Remaining Subsurface and Spray Leak From Underground Waste Transfer Lines).	E3
CP-MSP-04	Release of radioactive or toxic material to soil (plume) remaining subsurface from waste tank due to puncture of tank	Human error - Undetected deflection of drill string pipe causes breach of tank	None	None	SC: Primary Tank Leak Detect Syss SS: Tank Level Detect	AC: Emergency Prep (Significant Release)	Controls based on accident analysis (subsurface leak remaining subsurface).	E3

Table 5.4-3. Safety Structures, Systems, and Components and Technical Safety Requirements for Potentially Severe (E3 and E2) Environmental Consequences. (107 Sheets)

ID	Hazardous Condition	Cause	Preventive SSCs	Preventive TSRs	Mitigative SSCs	Mitigative TSRs	Memo	Env Cons
CP-MSP-05	Release of radioactive or toxic material to atmosphere from waste tank due to flammable gas deflagration	Human error AND Flammable gas is present in tank AND Mechanical failure of the pipe and probe (ignition source)	SC: SST Ventilation SC: DCRT Level Dip Tube Flow SC: TK-002 244-AR Level Dip Tube Flow	LCO: SST Ventilation Syss - Active LCO: SST Ventilation Syss - Passive LCO: DCRT Ventilation Syss LCO: 244-AR TK-002 Ventilation Sys AC: Flammable Gas Mon Cntrls AC: Excavation Cntrls	None required	None required	Controls based on BIO Appendix E and Spray Leak From Underground Waste Transfer Lines.	E3
CP-MSP-06	Release of radioactive or toxic material to atmosphere due to flammable gas deflagration caused by puncture and ignition of flammable gas in transfer line which propagates to the waste tank	Human error AND Flammable gas is present in transfer pipe AND Spark from probe tip (ignition source)	SC: SST Ventilation SC: DCRT Level Dip Tube Flow SC: TK-002 244-AR Level Dip Tube Flow	LCO: SST Ventilation Syss - Active LCO: SST Ventilation Syss - Passive LCO: DCRT Ventilation Syss LCO: 244-AR TK-002 Ventilation Sys AC: Flammable Gas Mon Cntrls AC: Excavation Cntrls	None required	None required	Controls based on BIO Appendix E and Spray Leak from Underground Waste Transfer Lines.	E3
CP-MSP-07	Release of radioactive or toxic material to soil (plume) remaining subsurface from Miscellaneous Inactive Storage Facility (MISF) due to puncture of tank	Human error	None	AC: Excavation Cntrls	None	None	Controls based on accident analysis (Spray Leak From Underground Waste Transfer Lines).	E3
CP-RMV-03	Release of radioactive or toxic material from transfer line through the push pipe during removal activities	Human error	None required	AC: Excavation Cntrls	None required	None required	Controls based on accident analysis (Spray Leak From Underground Waste Transfer Lines).	E3
CP-SET-04	Release of radioactive or toxic material from waste tank due to dome collapse	Excessive weight on tank dome (static load of platform)	None required	AC: Dome Loading Cntrls (Excessive Loads)	None required	None required	Controls based on accident analysis (Tank Failure Due to Excessive Loads).	E3

Table 5.4-3. Safety Structures, Systems, and Components and Technical Safety Requirements for Potentially Severe (E3 and E2) Environmental Consequences. (107 Sheets)

ID	Hazardous Condition	Cause	Preventive SSCs	Preventive TSRs	Mitigative SSCs	Mitigative TSRs	Memo	Env Cons
CP-SET-05	Release of radioactive or toxic material from waste tank due to dome collapse caused by load drop	Mechanical failure of equipment causes load drop	None required	AC: Dome Loading Cntrls (Lifting Cntrls)	None required	None required	Controls based on accident analysis (Tank Failure Due to Excessive Loads).	E3
CP-SET-06	Release of radioactive or toxic material from waste tank due to dome collapse caused by load drop	Human error causes load drop	None required	AC: Dome Loading Cntrls (Lifting Cntrls)	None required	None required	Controls based on accident analysis (Tank Failure Due to Excessive Loads).	E3
CP-SSP-01	Release of radioactive or toxic material to soil surface (pool) from transfer line due to puncture of line during transfer	Human error caused puncture to transfer line during push operations.	None required	AC: Excavation Cntrls	None required	None required	Controls based on accident analysis (Spray Leak From Underground Waste Transfer Lines).	E3
CP-SSP-02	Release of radioactive or toxic material to soil (plume) remaining subsurface from transfer line due to puncture of line during transfer	Human error caused puncture to transfer line during push operations	None	AC: Excavation Cntrls	SC: Pipe Encasements SC: Trans Leak Detect Syss SS: Tank Level Detect Syss SS: Salt Well Flow Totalizer	LCO: Trans Leak Detect Syss AC: Trans Cntrls AC: Emergency Prep (Significant Release) AC: Excavation Cntrls	Controls based on accident analysis (Spray Leak From Underground Waste Transfer Lines).	E3
CP-SSP-04	Release of radioactive or toxic material to soil (plume) remaining subsurface from waste tank due to puncture of tank	Human error - Undetected deflection of drill string pipe causes breach of tank	None	None	SC: Primary Tank Leak Detect Syss SS: Tank Level Detect	AC: Emergency Prep (Significant Release)	Controls based on accident analysis (Subsurface Leak Remaining Subsurface).	E3
CP-SSP-05	Release of radioactive or toxic material to soil (plume) remaining subsurface from MISF due to puncture of tank	Human error	None	AC: Excavation Cntrls	None	None	Controls based on accident analysis (Spray Leak From Underground Waste Transfer Lines).	E3
CP-SSP-16	Release of radioactive or toxic material to soil surface (pool) from transfer line due to puncture of line during transfer	Human error AND Mechanical failure of push pipe integrity inside the transfer line	None required	AC: Excavation Cntrls	None required	None required	Controls based on accident analysis (Spray Leak From Underground Waste Transfer Lines).	E3

Table 5.4-3. Safety Structures, Systems, and Components and Technical Safety Requirements for Potentially Severe (E3 and E2) Environmental Consequences. (107 Sheets)

ID	Hazardous Condition	Cause	Preventive SSCs	Preventive TSRs	Mitigative SSCs	Mitigative TSRs	Memo	Env Cons
CRN-03	Release of radioactive and/or toxic materials from tank due to dome collapse	Human error results in excessive weight on dome	None required	AC: Dome Loading Cntrls (Excessive Loads)	None required	None required	Controls based on accident analysis (Tank Failure Due to Excessive Loads).	E3
CRN-04	Release of radioactive and/or toxic materials from tank due to dome collapse	Crane or rigging failures drop load resulting in large impact to dome	None required	AC: Dome Loading Cntrls (Lifting Cntrls)	None required	None required	Controls based on accident analysis (Tank Failure Due to Excessive Loads).	E3
CRN-11	Radioactive or toxic material release from tank due to boom failure and tank/ equipment damage and dome collapse	Human error: improper load assembly, rigging, crane overloaded	None required	AC: Dome Loading Cntrls (Lifting Cntrls)	None required	None required	Controls based on accident analysis (Tank Failure Due to Excessive Loads).	E3
CRN-12	Radioactive or toxic material release from tank due to boom failure and tank/ equipment damage and dome collapse	Mechanical failure: corrosion, faulty materials	None required	AC: Dome Loading Cntrls (Lifting Cntrls)	None required	None required	Controls based on accident analysis (Tank Failure Due to Excessive Loads).	E3
CRN-13-a	Release of radioactive or toxic material from tank/equipment damage and dome collapse due to boom failure	High wind	None required	AC: Dome Loading Cntrls (High Wind)	None required	None required	Controls base on accident analysis (Natural Phenomena - High Wind).	E3
CRN-13-b	Release of radioactive or toxic material from tank/equipment damage and dome collapse due to boom failure	Seismic event	None required	None required	None required	AC: Emergency Prep (Seismic)	Controls based on accident analysis (Natural Phenomena - Seismic).	E3
CRN-21	Release of radioactive or toxic materials from tank due to loss of vertical load control, dropping crane load into tank, onto tank bottom (subsurface leak)	Human error: improper load assembly, rigging, positioning error	None	AC: Dome Loading Cntrls (Lifting Cntrls)	None	None	These are applicable controls from the Tank Failure Due to Excessive Loads accident analysis.	E3

Table 5.4-3. Safety Structures, Systems, and Components and Technical Safety Requirements for Potentially Severe (E3 and E2) Environmental Consequences. (107 Sheets)

ID	Hazardous Condition	Cause	Preventive SSCs	Preventive TSRs	Mitigative SSCs	Mitigative TSRs	Memo	Env Cons
CRN-22	Release of radioactive or toxic materials from tank due to loss of vertical load control, dropping crane load into tank, onto tank bottom (subsurface leak)	Mechanical failure: corrosion, faulty materials, hydraulics	None	AC: Dome Loading Cntrls (Lifting Cntrls)	None	None	These are applicable controls from the Tank Failure Due to Excessive Loads accident analysis.	E3
CRN-23	Release of radioactive or toxic materials from tank due to loss of vertical load control, dropping crane load into tank, onto tank bottom (subsurface leak)	High wind or seismic event	None required	AC: Dome Loading Cntrls (High Wind)	None required	AC: Emergency Prep (Seismic)	Controls base on accident analyses (Natural Phenomena - High Wind; and Natural Phenomena - Seismic).	E3
EE-01	Release of radioactive and toxic materials from tanks due to external force and fire	Aircraft crash	None required	None required	None required	None required	No controls required based on low accident frequency.	E3
EE-04-a	Release of radioactive and hazardous materials from SST tank due to external fires	Vehicle accident involving propane, diesel or gasoline delivery	None required	AC: Ign Cntrls (Speed Limits)	None required	AC: Emergency Prep (In-tank Fuel Fire)	Controls based on accident analysis (In-Tank Fuel Fire/ Deflagration).	E3
EE-04-b	Release of radioactive and hazardous materials from DST tank due to external fires	Vehicle accident involving propane, diesel or gasoline delivery	None required	AC: Ign Cntrls (Speed Limits)	None required	AC: Emergency Prep (In-tank Fuel Fire)	Controls based on accident analysis (In-Tank Fuel Fire/ Deflagration).	E3
EE-05-a	Release of radioactive or hazardous materials from SST tank due to external fires	Run-away vehicle or truck shears off one or more risers, ruptures gasoline tank	None required	AC: Ign Cntrls (Vehicle)	None required	AC: Emergency Prep (In-tank Fuel Fire)	Controls based on accident analysis (In-Tank Fuel Fire/ Deflagration).	E3
EE-05-b	Release of radioactive or hazardous materials from DST tank due to external fires	Run-away vehicle or truck shears off one or more risers, ruptures gasoline tank	None required	AC: Ign Cntrls (Vehicle)	None required	AC: Emergency Prep (In-tank Fuel Fire)	Controls based on accident analysis (In-Tank Fuel Fire/ Deflagration).	E3

Table 5.4-3. Safety Structures, Systems, and Components and Technical Safety Requirements for Potentially Severe (E3 and E2) Environmental Consequences. (107 Sheets)

ID	Hazardous Condition	Cause	Preventive SSCs	Preventive TSRs	Mitigative SSCs	Mitigative TSRs	Memo	Env Cons
EE-10	Release of radioactive and hazardous materials from tanks due to loss of tank integrity	Water line breaks, saturates subsurface, and hydrostatic head causes tank to float	SS: Service Water Flow Totalizer	None	SC: Primary Tank Leak Detect Syss SS: Tank Level Detect Syss	LCO: Primary Tank Leak Detect Syss AC: Emergency Prep (Significant Release)	These are applicable controls from the Surface Leak Resulting in Pool accident analysis. Tank floating from sub-surface hydrostatic head considered incredible.	E3
I-222S-1-CMP-E	Release of radioactive aerosols to the atmosphere from 244-S or receiver tank due to over pressurization of tank caused by organic fire	Human error - upset of 222-S Lab operations	None required	AC: Ign Cntrls (Organic Solvent) AC: Trans Cntrls (Organic Solvent)	None required	AC: HEPA Filter Cntrl (Source Term) AC: Emergency Prep Program (Organic Solvent)	Controls based on accident analysis (Organic Solvent Fire).	E3
I-242A-1-FLW-A	Release of radioactive material from Feed Tank 241-AW-102 due to fire/ explosion caused by igniting hydrogen gas when pump is damaged and possibly becomes an ignition source from dead heading	Valves fail to regulate (closed position) which fails pump and creates ignition source, sufficient hydrogen accumulation for fire/explosion.	SC: Primary Tank Leak Detect Syss SC: DST/AWF Ventilation	LCO: DST and AWF Tank Ventilation Syss LCO: Primary Tank Leak Detect Syss AC: Flammability Cntrls AC: Ign Cntrls AC: Flammable Gas Mon Cntrls	None required	None required	Controls based on BIO Appendix E.	E3
I-242A-1-FLW-B	Release of radioactive material from Feed Tank 241-AW-102 due to fire/ explosion caused by igniting hydrogen gas when pump is damaged and possibly becomes an ignition source	Feed pump fails and causes ignition source, sufficient hydrogen accumulation for fire/explosion	SC: Primary Tank Leak Detect Syss SC: DST/AWF Ventilation	LCO: DST and AWF Tank Ventilation Syss LCO: Primary Tank Leak Detect Syss AC: Flammability Cntrls AC: Ign Cntrls AC: Flammable Gas Mon Cntrls	None required	None required	Controls based on BIO Appendix E.	E3

Table 5.4-3. Safety Structures, Systems, and Components and Technical Safety Requirements for Potentially Severe (E3 and E2) Environmental Consequences. (107 Sheets)

ID	Hazardous Condition	Cause	Preventive SSCs	Preventive TSRs	Mitigative SSCs	Mitigative TSRs	Memo	Env Cons
I-242A-1-FLW-C	Release of radioactive material from Feed Tank 241-AW-102 due to fire/explosion caused by igniting hydrogen gas when pump is damaged and possibly becomes an ignition source from dead heading	Plugged line which fails pump and causes ignition source, sufficient hydrogen accumulation for fire/explosion	SC: Primary Tank Leak Detect Syss SC: DST/AWF Ventilation	LCO: DST and AWF Tank Ventilation Syss LCO: Primary Tank Leak Detect Syss AC: Flammability Cntrls AC: Ign Cntrls AC: Flammable Gas Mon Cntrls	None required	None required	Controls based on BIO Appendix E.	E3
I-242A-1-FLW-D	Release of radioactive material from Feed Tank 241-AW-102 due to fire/explosion caused by igniting hydrogen gas when pump is damaged and possibly becomes an ignition source	Pump plugged which fails pump and causes ignition source, sufficient hydrogen accumulation for fire/explosion	SC: Primary Tank Leak Detect Syss SC: DST/AWF Ventilation	LCO: DST and AWF Tank Ventilation Syss LCO: Primary Tank Leak Detect Syss AC: Flammability Cntrls AC: Ign Cntrls AC: Flammable Gas Mon Cntrls	None required	None required	Controls based on BIO Appendix E.	E3
I-242A-1-FLW-E	Release of radioactive material from Feed Tank 241-AW-102 due to fire/explosion caused by igniting hydrogen gas when pump is damaged and possibly becomes an ignition source from pump cavitation	Empty feed tank which fails pump and causes ignition source, sufficient hydrogen accumulation for fire/explosion	SC: Primary Tank Leak Detect Syss SC: DST/AWF Ventilation	LCO: DST and AWF Tank Ventilation Syss LCO: Primary Tank Leak Detect Syss AC: Flammability Cntrls AC: Ign Cntrls AC: Flammable Gas Mon Cntrls	None required	None required	Controls based on BIO Appendix E.	E3
I-242A-2-CMP-B	Release to the atmosphere through unsealed cracks in the cover blocks due to over pressurization of the receiver tank	Steam block valves inadvertently opened or left open	None required	None required	None required	AC: HEPA Filter Cntrls (Source Term)	Controls based on accident analysis (Steam Intrusion from Interfacing Syss).	E3
I-242A-4-TMP-A	Release of radioactive material from Tank 241-AW-102 caused by ignition of organics in Tank C-100 which pressurizes the drain line and propagates the fire down the line to Feed Tank 241-AW-102	Faulty control of vacuum to CA-1 vessel causing pot to boil with organic layer available	None required	None required	None required	None required	No controls required based on low accident frequency.	E3

Table 5.4-3. Safety Structures, Systems, and Components and Technical Safety Requirements for Potentially Severe (E3 and E2) Environmental Consequences. (107 Sheets)

ID	Hazardous Condition	Cause	Preventive SSCs	Preventive TSRs	Mitigative SSCs	Mitigative TSRs	Memo	Env Cons
I-242A-6-CMP-A	Release (steam) of aerosols to the atmosphere through unsealed cracks in the cover blocks due to over pressurization of the receiver tank	Human error - steam block valve inadvertently left opened	None required	None required	None required	AC: HEPA Filter Cntrls (Source Term)	Controls based on accident analysis (Steam Intrusion from Interfacing Syss).	E3
I-BPLANT-1-CMP-E	Release of tank waste due to fire in receiver tank from transferring organics from B Plant	Human error - tank containing organics in B Plant rupture and spills organics to the drains which eventually end up in Tank 24-1 and an inadvertent transfer to tank farms	None required	AC: Ign Cntrls (Organic Solvent) AC: Trans Cntrls (Organic Solvent)	None required	AC: HEPA Filter Cntrl (Source Term) AC: Emergency Prep Program (Organic Solvent)	Controls based on accident analysis (Organic Solvent Fire).	E3
I-PFP-1-CMP-E	Release of high level waste from receiver tank due to fire from organics transferred from PFP	Excess organic material added to waste results in fire	None required	AC: Ign Cntrls (Organic Solvent) AC: Trans Cntrls (Organic Solvent)	None required	AC: HEPA Filter Cntrl (Source Term) AC: Emergency Prep Program (Organic Solvent)	Controls based on accident analysis (Organic Solvent Fire).	E3
ITK-07	Radioactive and/or hazardous material release from tank below grade (non-fire, non-explosion) due to intrusive activity	Dropped equipment in tank from human error or equipment failures (also see crane operations) Penetration of tank with linear-force, high pressure, or rotational equipment from human error or equipment failure	None	AC: Dome Loading Cntrls (Lifting Cntrls)	None	None	These are applicable controls from the Tank Failure Due to Excessive Loads accident analysis. This control also addresses this hazardous condition for worker risk by preventing equipment drop.	E3
ITK-FR-04	Release of radioactive aerosols from tank due to tank collapse	Equipment becomes lodged in riser, efforts to remove pull riser out of tank causing loss of structural integrity leading to tank collapse	None required	AC: Dome Loading Cntrls (Lifting Cntrls)	None required	None required	Controls based on accident analysis (Tank Failure Due to Excessive Loads).	E3

Table 5.4-3. Safety Structures, Systems, and Components and Technical Safety Requirements for Potentially Severe (E3 and E2) Environmental Consequences. (107 Sheets)

ID	Hazardous Condition	Cause	Preventive SSCs	Preventive TSRs	Mitigative SSCs	Mitigative TSRs	Memo	Env Cons
ITK-FR-19	Release of radioactive aerosols from tank due to dome collapse	Hydraulic jacks on assembly stand are operated while assembly is bolted to flange tearing out riser and destroying tank integrity leading to dome collapse	None required	None required	None required	None required	No controls required based on low accident frequency.	E3
LDUA 1-25	Release of aerosolized waste to the atmosphere from headspace of single shell tank due to ignition of flammable gas	Fire (electrical, lighting)	SC: SST Ventilation	LCO: SST Ventilation Syss - Active LCO: SST Ventilation Syss - Passive AC: Ign Cntrls AC: Flammable Gas Mon Cntrls	None required	None required	Controls based on BIO Appendix E.	E3
LDUA 1-32	Release of aerosolized waste to the atmosphere from headspace of single shell tank due to ignition of flammable gas	During planned intrusive activities, sampling triggers GRE	SC: SST Ventilation	LCO: SST Ventilation Syss - Active LCO: SST Ventilation Syss - Passive AC: Ign Cntrls AC: Flammable Gas Mon Cntrls	None required	None required	Controls based on BIO Appendix E.	E3
LDUA 1-33	Release of aerosolized waste to the atmosphere from headspace of single shell tank due to ignition of flammable gas	Non-arm end effectors (OVS, OSVS) dropped down riser	SC: SST Ventilation	LCO: SST Ventilation Syss - Active LCO: SST Ventilation Syss - Passive AC: Flammable Gas Mon Cntrls	None required	None Required	Controls based on BIO Appendix E.	E3
LDUA 1-33A	Release of liquid waste to the soil due to the dropping of non-arm end effector down riser which penetrates tank bottom	Non-arm end effectors (OVS, OSVS) dropped down riser	None required	AC: Dome Loading Cntrls (Lifting Cntrls)	None required	None required	This control addresses the hazardous condition by preventing load drop.	E3
LDUA 2-2	Release of aerosolized waste to the atmosphere from headspace of single shell tank due to ignition of hydraulic fluid	Structural failure of hydraulic system	None required	AC: Ign Cntrls	None required	AC: Emergency Prep	Controls based on BIO Appendix E.	E3

Table 5.4-3. Safety Structures, Systems, and Components and Technical Safety Requirements for Potentially Severe (E3 and E2) Environmental Consequences. (107 Sheets)

ID	Hazardous Condition	Cause	Preventive SSCs	Preventive TSRs	Mitigative SSCs	Mitigative TSRs	Memo	Env Cons
LDUA 2-20	Release of aerosolized waste to the atmosphere from headspace of single shell tank due to ignition of flammable gas	Combustible source of gas located near the compressor intake.	SC: SST Ventilation	LCO: SST Ventilation Syss - Active LCO: SST Ventilation Syss - Passive AC: Ign Cntrls AC: Flammable Gas Mon Cntrls	None required	None required	Controls based on BIO Appendix E.	E3
LDUA 2-51	Release of aerosolized waste to the atmosphere from headspace of single shell tank due to ignition of flammable gas	Supervisor error - arm in wrong mode, Electric remains on after air purge fault, flammable gas enters arm, spark ignites gas	SC: SST Ventilation	LCO: SST Ventilation Syss - Active LCO: SST Ventilation Syss - Passive AC: Flammable Gas Mon Cntrls	None required	None required	Controls based on BIO Appendix E.	E3
LDUA 5-43	Release of aerosolized waste to the atmosphere from headspace of single shell tank due to ignition of flammable gas	Lightning strikes VPM in raised position	None required	AC: Ign Cntrls (Lightning)	None required	None required	Controls based on analyzed accident Natural Phenomena - Lightning.	E3
LDUA 5-45	Release of aerosolized waste to the atmosphere from headspace of single shell tank due to ignition of flammable gas	Helicopter/airplane crash	None required	None required	None required	None required	No controls required based on low frequency of aircraft event.	E3
LDUA 6-24	Release of aerosolized waste to the atmosphere from headspace of single shell tank due to ignition of flammable gas	Wrong setting on safety interlock for electric shutdown on loss of purge air	SC: SST Ventilation	LCO: SST Ventilation Syss - Active LCO: SST Ventilation Syss - Passive AC: Flammable Gas Mon Cntrls	None required	None required	Controls based on BIO Appendix E.	E3
LDUA/EREE 1-22	Release of aerosolized waste to the atmosphere from headspace of single shell tank due to ignition of flammable gas	Electrical Short in LDUA Lighting short	SC: SST Ventilation	LCO: SST Ventilation Syss - Active LCO: SST Ventilation Syss - Passive AC: Ign Cntrls AC: Flammable Gas Mon Cntrls	None required	None required	Controls based on BIO Appendix E.	E3

Table 5.4-3. Safety Structures, Systems, and Components and Technical Safety Requirements for Potentially Severe (E3 and E2) Environmental Consequences. (107 Sheets)

ID	Hazardous Condition	Cause	Preventive SSCs	Preventive TSRs	Mitigative SSCs	Mitigative TSRs	Memo	Env Cons
LDUA/EREE 1-28	Release of aerosolized waste to the atmosphere from headspace of single shell tank due to ignition of flammable gas	Electrical Short in LDUA/EREE Lighting short	SC: SST Ventilation	LCO: SST Ventilation Syss - Active LCO: SST Ventilation Syss - Passive AC: Ign Cntrls AC: Flammable Gas Mon Cntrls	None required	None required	Controls based on BIO Appendix E.	E3
NP-07	Radioactive and hazardous material releases from tanks and ventilation systems due to seismic event	Seismic event collapses domes	None required	None required	None required	AC: Emergency Prep (Seismic)	Controls based on accident analysis (Natural Phenomena - Seismic).	E3
NP-09	Radioactive and hazardous material releases from tanks due to seismic event	Seismic event results in tank leaks or below grade tank ruptures	None	None	None	AC: Emergency Prep (Seismic)	These are applicable controls from the Natural Phenomena - Seismic accident analysis.	E3
NP-11	Radioactive and hazardous material releases from tank farms due to lava flow	Eruption of molten lava from fissures	None required	None required	None required	None required	No controls required based on low accident frequency.	E3
NP-13	Radioactive and hazardous material releases from tanks due to excessive weight on dome	Accumulations of heavy snow followed by heavy rain	None required	None required	None required	None required	No controls required based on accident analysis (Tank Failure Due to Excessive Loads).	E3
OGT-EXT3-01A	Release of radioactive or hazardous aerosols from the primary pipe due to spray leak caused by truck crash into piping system	Human error, line struck by truck	SC: OGT Concrete Shielding Sys	AC: Trans Cntrls (OGT protection) AC: Trans Pump Admin Lock Program AC: Ign Cntrls (Speed Limit)	None required	None required	Controls based on accident analyses (Spray Leak in Structure or from Overground Waste Trans Lines; and In-Tank Fuel Fire/ Deflagration).	E3

Table 5.4-3. Safety Structures, Systems, and Components and Technical Safety Requirements for Potentially Severe (E3 and E2) Environmental Consequences. (107 Sheets)

ID	Hazardous Condition	Cause	Preventive SSCs	Preventive TSRs	Mitigative SSCs	Mitigative TSRs	Memo	Env Cons
OGT-FLOW1-03A	Release of radioactive or hazardous aerosols from the primary pipe due to spray leak caused by misdirected flow	Spray leak caused by JR-1 (3-way valve) mispositioned to flush, two check valves fail, flush disconnect fails (check valve), reverse flow to external flush fixture and release to the environment	SC: Pressure Switch Interlocks or Alarms (Water Service Lines)	LCO: Service Water Pressure Detect Syss AC: Trans Cntrls (Mis-routing) AC: Trans Pump Admin Lock Cntrls	None required	None required	Controls based on accident analysis (Spray Leak in Structure or from Overground Waste Transfer Lines).	E3
RSR-05	Release of radioactive and toxic materials from tank (below grade) due to tank breach from dropped equipment (tools, mirrors, gauge plugs) into tank	Failure to attach lanyard or other position limiting device Failure of lanyard or device	None	AC: Dome Loading Cntrls (Lifting Cntrls)	None	None	These are applicable controls from the Tank Failure Due to Excessive Loads accident analysis.	E3
W058-FLOW15	Release of radioactive slurry aerosols to the atmosphere caused by spray leak of slurry from the SY-A or SY-B valve pit due to piping system leak	Computer failure or human error causing misrouting of material when flow path is not completely connected	None required	AC: Trans Pump Admin Lock Cntrls AC: Trans Cntrls (Mis-routing)	SC: Trans Sys Cvrs	LCO: Trans Sys Cvrs AC: Trans Sys Cvr Removal Cntrls	Controls based on accident analysis (Spray Leak in Structure or from Overground Waste Transfer Lines).	E3
W058-FLOW16	Release of radioactive slurry aerosols to the atmosphere caused by spray leak of slurry from the SY-A or SY-B valve pit due to piping system leak	External leak of valve or valves to the valve pit	None required	AC: Trans Pump Admin Lock Cntrls	SC: Trans Sys Cvrs	LCO: Trans Sys Cvrs AC: Trans Sys Cvr Removal Cntrls	Controls based on accident analysis (Spray Leak in Structure or from Overground Waste Transfer Lines).	E3
W058-FLOW17a	Release of radioactive slurry aerosols to the atmosphere caused by spray leak of slurry from the SY-A or SY-B valve pit due to piping system leak	Failure of jumper due to misalignment (human error) plus mitigative features failure	None required	AC: Trans Pump Admin Lock Cntrls	SC: Trans Sys Cvrs	LCO: Trans Sys Cvrs AC: Trans Sys Cvr Removal Cntrls	Controls based on accident analysis (Spray Leak in Structure or from Overground Waste Transfer Lines).	E3

Table 5.4-3. Safety Structures, Systems, and Components and Technical Safety Requirements for Potentially Severe (E3 and E2) Environmental Consequences. (107 Sheets)

ID	Hazardous Condition	Cause	Preventive SSCs	Preventive TSRs	Mitigative SSCs	Mitigative TSRs	Memo	Env Cons
W058-FLOW17b	Release of radioactive slurry aerosols to the atmosphere caused by spray leak of slurry from the SY-A or SY-B valve pit due to piping system leak	Failure of jumper due to gasket failure plus mitigative features failure	None required	AC: Trans Pump Admin Lock Cntrls	SC: Trans Sys Cvrs	LCO: Trans Sys Cvrs AC: Trans Sys Cvr Removal Cntrls	Controls based on accident analysis (Spray Leak in Structure or from Overground Waste Transfer Lines).	E3
W058-FLOW17c	Release of radioactive slurry aerosols to the atmosphere caused by spray leak of slurry from the SY-A or SY-B valve pit due to piping system leak	Failure of jumper due to corrosion plus mitigative features failure	None required	AC: Trans Pump Admin Lock Cntrls	SC: Trans Sys Cvrs	LCO: Trans Sys Cvrs AC: Trans Sys Cvr Removal Cntrls	Controls based on accident analysis (Spray Leak in Structure or from Overground Waste Transfer Lines).	E3
W058-FLOW18	Release of radioactive supernate aerosols to the atmosphere caused by spray leak of supernate from the SY-A or SY-B valve pit due to piping system leak	Computer failure or human error causing misrouting of material when flow path is not completely connected	None required	AC: Trans Pump Admin Lock Cntrls AC: Trans Cntrls (Mis-routing)	SC: Trans Sys Cvrs	LCO: Trans Sys Cvrs AC: Trans Sys Cvr Removal Cntrls	Controls based on accident analysis (Spray Leak in Structure or from Overground Waste Transfer Lines).	E3
W058-FLOW19	Release of radioactive supernate aerosols to the atmosphere caused by spray leak of supernate from the SY-A or SY-B valve pit due to piping system leak	External leak of valve or valves to the valve pit plus mitigative features failure	None required	AC: Trans Pump Admin Lock Cntrls	SC: Trans Sys Cvrs	LCO: Trans Sys Cvrs AC: Trans Sys Cvr Removal Cntrls	Controls based on accident analysis (Spray Leak in Structure or from Overground Waste Transfer Lines).	E3
W058-FLOW20a	Release of radioactive supernate aerosols to the atmosphere caused by spray leak of supernate from the SY-A or SY-B valve pit due to piping system leak	Failure of jumper due to misalignment (human error) plus mitigative features failure	None required	AC: Trans Pump Admin Lock Cntrls	SC: Trans Sys Cvrs	LCO: Trans Sys Cvrs AC: Trans Sys Cvr Removal Cntrls	Controls based on accident analysis (Spray Leak in Structure or from Overground Waste Transfer Lines).	E3
W058-FLOW20b	Release of radioactive supernate aerosols to the atmosphere caused by spray leak of supernate from the SY-A or SY-B valve pit due to piping system leak	Failure of jumper due to gasket failure plus mitigative features failure	None required	AC: Trans Pump Admin Lock Cntrls	SC: Trans Sys Cvrs	LCO: Trans Sys Cvrs AC: Trans Sys Cvr Removal Cntrls	Controls based on accident analysis (Spray Leak in Structure or from Overground Waste Transfer Lines).	E3

Table 5.4-3. Safety Structures, Systems, and Components and Technical Safety Requirements for Potentially Severe (E3 and E2) Environmental Consequences. (107 Sheets)

ID	Hazardous Condition	Cause	Preventive SSCs	Preventive TSRs	Mitigative SSCs	Mitigative TSRs	Memo	Env Cons
W058-FLOW20c	Release of radioactive supernate aerosols to the atmosphere caused by spray leak of supernate from the SY-A or SY-B valve pit due to piping system leak	Failure of jumper due to corrosion plus mitigative features failure	None required	AC: Trans Pump Admin Lock Cntrls	SC: Trans Sys Cvrs	LCO: Trans Sys Cvrs AC: Trans Sys Cvr Removal Cntrls	Controls based on accident analysis (Spray Leak in Structure or from Overground Waste Transfer Lines).	E3
W058-INTEG32	Release of radioactive supernate or slurry aerosols to the atmosphere due to a spray leak from test risers located near SY-A and SY-B valve pits	Failure of primary piping and path for spray leak from test riser plus mitigative features failure	None required	AC: Encasement Seal Loops AC: Trans Pump Admin Lock Cntrls AC: Trans Cntrls (Mis-routing)	None required	None required	Controls based on accident analysis (Spray Leak in Structure or from Overground Waste Transfer Lines).	E3
W058-INTEG34	Release of radioactive slurry aerosols to the atmosphere caused by spray leak of slurry from the SY-A or SY-B valve pit due to piping system leak	External event (airplane crash, etc)	None required	None required	None required	None required	No controls required based on low accident frequency.	E3
W058-INTEG35	Release of radioactive slurry aerosols to the atmosphere caused by spray leak of slurry from the SY-A or SY-B valve pit due to piping system leak	Seismic event	None required	AC: Trans Cntrls (Mis-routing) AC: Trans Pump Admin Lock Cntrls	SC: Trans Sys Cvrs	LCO: Trans Sys Cvrs AC: Trans Sys Cvr Removal Cntrls AC: Emergency Prep (Seismic)	Controls based on accident analyses (Spray Leak in Structure or from Overground Waste Transfer Lines; and Natural Phenomena - Seismic).	E3
W058-INTEG36	Release of radioactive supernate aerosols to the atmosphere caused by spray leak of supernate from the SY-A or SY-B valve pit due to piping system leak	External event (airplane crash, etc)	None required	None required	None required	None required	No controls required based on low accident frequency.	E3
W058-INTEG37	Release of radioactive supernate aerosols to the atmosphere caused by spray leak of supernate from the SY-A or SY-B valve pit due to piping system leak	Seismic event	None required	AC: Trans Pump Admin Lock Cntrls	SC: Trans Sys Cvrs	LCO: Trans Sys Cvrs AC: Trans Sys Cvr Removal Cntrls AC: Emergency Prep (Seismic)	Controls based on accident analyses (Spray Leak in Structure or from Overground Waste Transfer Lines; and Natural Phenomena - Seismic).	E3

Table 5.4-3. Safety Structures, Systems, and Components and Technical Safety Requirements for Potentially Severe (E3 and E2) Environmental Consequences. (107 Sheets)

ID	Hazardous Condition	Cause	Preventive SSCs	Preventive TSRs	Mitigative SSCs	Mitigative TSRs	Memo	Env Cons
XS-01-FLOW02	Release of liquids, solids and/or vapors from single shell tank due to dome collapse caused by flammable gas burn	Loss of pump prime results in overheated pump that ignites flammable gas	SC: SST Ventilation	LCO: SST Ventilation Syss AC: Flammability Cntrls AC: Ign Cntrls AC: Flammable Gas Mon Cntrls	None required	None required	Controls based on BIO Appendix E.	E3
XS-01-FLOW03	Release of liquids, solids and/or vapors from single shell tank due to dome collapse and DCRT pressurization caused by flammable gas fire/explosion propagating from DCRT to single shell tank	Pipeline connecting single shell tank and DCRT fills with flammable gas; loss of ventilation flow in DCRT so that a flammable gas atmosphere is ignited by the ventilation outlet heater	SC: SST Ventilation SC: DCRT Level Dip Tube Flow	LCO: SST Ventilation Syss LCO: DCRT Ventilation Syss AC: Flammability Cntrls AC: Ign Cntrls AC: Flammable Gas Mon Cntrls	None required	None required	Controls based on BIO Appendix E.	E3
XS-03-TEMP09	Release of liquid radioactive waste from DCRT due to flow path to soil	Exceeding structural limits on tank due to high temperature caused by transfer of steam from PFP as well as vault leak	None	None	SS: Tank Level Detect Sys	AC: Trans Cntrls (Material Balance)	These are applicable controls from the Subsurface Leak Remaining Subsurface accident analysis. (DCRTs normally only contain waste during transfer operations).	E3
XS-05-FLOW02	Release of liquid radioactive waste from DCRT due to flow path to soil	Exceeding structural limit on tank due to replacement of exhaust fan with higher capacity fan and blockage of ventilation inlet concurrent with vault leak	None	None	SS: Tank Level Detect Sys	None	These are applicable controls from the Subsurface Leak Remaining Subsurface accident analysis. (DCRTs normally only contain waste during transfer operations).	E3
XS-06-FLOW02	Release of liquid radioactive waste from DCRT transfer piping to Tank 241-SY-102 due to spray leak in DCRT pump pit	Pipe failure in DCRT pump pit causing spray leak	None required	AC: Trans Cntrls (Mis-routing) AC: Trans Pump Admin Lock Cntrls	SC: Trans Sys Cvrs	LCO: Trans Sys Cvrs AC: Trans Sys Cvr Removal Cntrls	Controls based on accident analysis (Spray Leak in Structure or from Overground Waste Transfer Lines).	E3

Table 5.4-3. Safety Structures, Systems, and Components and Technical Safety Requirements for Potentially Severe (E3 and E2) Environmental Consequences. (107 Sheets)

ID	Hazardous Condition	Cause	Preventive SSCs	Preventive TSRs	Mitigative SSCs	Mitigative TSRs	Memo	Env Cons
XS-06-FLOW03	Release of liquid radioactive waste from transfer piping from PFP to DCRT due to spray leak in DCRT pump pit	Pipe failure in DCRT pump pit causing spray leak	None required	AC: Trans Pump Admin Lock Cntrls AC: Trans Cntrls (Mis-routing)	SC: Trans Sys Cvrs	LCO: Trans Sys Cvrs AC: Trans Sys Cvr Removal Cntrls	Controls based on accident analysis (Spray Leak in Structure or from Overground Waste Transfer Lines).	E3
XS-06-FLOW04	Release of liquid radioactive waste from transfer piping from an SST to a DCRT due to spray leak (SPUTTER) of saltwell liquor from DCRT pump pit	Pipe failure	None required	AC: Trans Pump Admin Lock Cntrls	SC: Trans Sys Cvrs	LCO: Trans Sys Cvrs AC: Trans Sys Cvr Removal Cntrls	Controls based on accident analysis (Spray Leak in Structure or from Overground Waste Transfer Lines).	E3
102AW-01-FLOW 102AW-04-PRES	Release of radioactive aerosol from transfer pipe which runs from DCRT to Tank 241-AW-102 due to spray leak into open underground structure	Piping leak due to thermal stress of transferring hot solution in cold pipe	None required	AC: Trans Cntrls (Mis-routing) AC: Trans Pump Admin Lock Cntrls	SC: Trans Sys Cvrs	LCO: Trans Sys Cvrs AC: Trans Sys Cvr Removal Cntrls	Controls based on accident analysis (Spray Leak in Structure or from Overground Waste Transfer Lines).	E2
102AW-01-FLOW01	Release of liquid radioactive waste aerosols from transfer pipe to Tank 241-AW-102 due to spray leak into open underground structure	Piping leak due to corrosion caused by transferring high temperature waste	None required	AC: Trans Cntrls (Mis-routing) AC: Trans Pump Admin Lock Cntrls	SC: Trans Sys Cvrs	LCO: Trans Sys Cvrs AC: Trans Sys Cvr Removal Cntrls	Controls based on accident analysis (Spray Leak in Structure or from Overground Waste Transfer Lines).	E2
102AW-01-FLOW02	Release of radioactive waste to soil from transfer piping which runs to Tank 241-AW-102 due to leak from primary pipe and encasement	Excavation accident fails primary pipe and encasement	None required	AC: Excavation Cntrls	None required	None required	Controls based on accident analysis (Spray Leak From Underground Waste Transfer Lines).	E2
102AW-01-FLOW03	Release of radioactive waste to soil from transfer pipe to Tank 241-AW-102 due to leak of radioactive waste from primary pipe and encasement	Corrosion of inner and outer pipe cause failure of primary pipe and encasement	SC: Pipe Encasements	AC: Encasement Seal Loops	SS: Tank Level Detect Syss SS: Salt Well Flow Totalizer	AC: Trans Cntrls (Leak Detect/Cntrl) AC: Emergency Prep (Significant Release)	Controls based on accident analysis (Subsurface Leak Resulting in Pool).	E2

Table 5.4-3. Safety Structures, Systems, and Components and Technical Safety Requirements for Potentially Severe (E3 and E2) Environmental Consequences. (107 Sheets)

ID	Hazardous Condition	Cause	Preventive SSCs	Preventive TSRs	Mitigative SSCs	Mitigative TSRs	Memo	Env Cons
102AW-01-FLOW04	Release of radioactive waste to soil from transfer pipe to Tank 241-AW-102 due to leak of radioactive waste from primary pipe and encasement	High structural loading from traffic or cranes fails primary pipe and encasement	None required	None required	None required	None required	No controls required based on low accident frequency.	E2
102AW-01-FLOW05	Release of radioactive waste to soil from transfer piping to Tank 241-AW-102 due to leak from primary pipe and encasement	Seismic event fails primary pipe and encasement	SC: Pipe Encasements	AC: Encasement Seal Loops	SS: Tank Level Detect Syss SS: Salt Well Flow Totalizer	AC: Trans Cntrls (Leak Detect/Cntrl) AC: Emergency Prep (Significant Release) AC: Emergency Prep (Seismic)	Controls based on accident analyses (Subsurface Leak Resulting in Pool; and Natural Phenomena - Seismic).	E2
102AW-01-FLOW06	Release of radioactive waste to soil from transfer pipe to Tank 241-AW-102 due to leak of radioactive waste from primary pipe and encasement	Undermining due to leak of nearby pipes cause failure of primary pipe and encasement	SC: Pipe Encasements	AC: Encasement Seal Loops	SS: Tank Level Detect Syss SS: Salt Well Flow Totalizer	AC: Trans Cntrls (Leak Detect/Cntrl) AC: Emergency Prep (Significant Release)	Controls based on accident analysis (Subsurface Leak Resulting in Pool).	E2
102AW-01-FLOW07	Release of radioactive waste to soil from transfer pipe to Tank 241-AW-102 due to leak of radioactive waste from primary pipe and encasement	Water hammer cause failure of primary pipe and encasement	SC: Pipe Encasements	AC: Trans Pump Admin Lock Cntrls AC: Encasement Seal Loops	SS: Tank Level Detect Syss SS: Salt Well Flow Totalizer	AC: Trans Cntrls (Leak Detect/Cntrl) AC: Emergency Prep (Significant Release)	Controls based on accident analysis (Subsurface Leak Resulting in Pool).	E2
102AW-01-FLOW10	Release of liquid radioactive waste from Tank 241-AW-102 due to overflow	Misrouting of waste from reverse flow caused by the combination of an incorrectly wired pump and a full transfer pipe	SC: Trans Leak Detect Syss SS: Tank Level Detect Syss	LCO: Trans Leak Detect Syss AC: Trans Cntrls (Leak Prevention/ Detect/Cntrl)	SC: Trans Leak Detect Syss SS: Tank Level Detect Syss SC: Trans Sys Cvrs	LCO: Trans Sys Cvrs LCO: Trans Leak Detect Syss AC: Trans Cntrls (Leak Detect/Cntrl) AC: Emergency Prep (Significant Release) AC: Trans Pump Admin Lock Cntrls AC: Trans Sys Cvr Removal Cntrls	Controls based on accident analysis (Surface Leak Resulting in Pool).	E2

Table 5.4-3. Safety Structures, Systems, and Components and Technical Safety Requirements for Potentially Severe (E3 and E2) Environmental Consequences. (107 Sheets)

ID	Hazardous Condition	Cause	Preventive SSCs	Preventive TSRs	Mitigative SSCs	Mitigative TSRs	Memo	Env Cons
102AW-01-FLOW11	Release of liquid radioactive waste to the ground surface from Tank 241-AW-102 due to overflow of Tank 241-AW-102 or underground structure	Misrouting to destination other than intended causes overflow	SC: Trans Leak Detect Syss SC: Primary Tank Leak Detect Syss SC: Pressure Switch Interlocks or Alarms (Water Service Lines) SS: Tank Level Detect Syss SS: Salt Well Flow Totalizer	LCO: Service Water Pressure Detect Syss LCO: Primary Tank Leak Detect Syss AC: Trans Cntrls (Leak Prevention/ Detect/Cntrl)	SC: Trans Leak Detect Syss SC: Primary Tank Leak Detect Syss SS: Tank Level Detect Syss SS: Salt Well Flow Totalizer SC: Trans Sys Cvrs	LCO: Trans Sys Cvrs LCO: Trans Leak Detect Syss LCO: Primary Tank Leak Detect Syss AC: Trans Cntrls (Leak Detect/Cntrl) AC: Emergency Prep (Significant Release) AC: Trans Pump Admin Lock Cntrls AC: Trans Sys Cvr Removal Cntrls	Controls based on accident analysis (Surface Leak Resulting in Pool).	E2
102AW-01-TEMP01	Release of liquid radioactive waste from transfer pipe to Tank 241-AW-102 due to leaks overflowing from underground structure	Piping leak due to corrosion caused by transferring high temperature waste	SC: Trans Leak Detect Syss SS: Tank Level Detect Syss	LCO: Trans Leak Detect Syss AC: Trans Cntrls (Leak Prevention/ Detect/Cntrl)	SC: Trans Leak Detect Syss SS: Tank Level Detect Syss SC: Trans Sys Cvrs	LCO: Trans Sys Cvrs LCO: Trans Leak Detect Syss AC: Trans Cntrls (Leak Detect/Cntrl) AC: Emergency Prep (Significant Release) AC: Trans Pump Admin Lock Cntrls AC: Trans Sys Cvr Removal Cntrls	Controls based on accident analysis (Surface Leak Resulting in Pool).	E2

Table 5.4-3. Safety Structures, Systems, and Components and Technical Safety Requirements for Potentially Severe (E3 and E2) Environmental Consequences. (107 Sheets)

ID	Hazardous Condition	Cause	Preventive SSCs	Preventive TSRs	Mitigative SSCs	Mitigative TSRs	Memo	Env Cons
102AW-01-TEMP01A	Release of liquid waste from transfer pipe to Tank 241-AW-102 due to leaks overflowing from underground structure	Piping leak due to thermal stress of transferring hot solution in cold pipe	SC: Trans Leak Detect Syss SS: Tank Level Detect Syss	LCO: Trans Leak Detect Syss AC: Trans Cntrls (Leak Prevention/ Detect/Cntrl)	SC: Trans Leak Detect Syss SS: Tank Level Detect Syss SC: Trans Sys Cvrs	LCO: Trans Sys Cvrs LCO: Trans Leak Detect Syss AC: Trans Cntrls (Leak Detect/Cntrl) AC: Emergency Prep (Significant Release) AC: Trans Pump Admin Lock Cntrls AC: Trans Sys Cvr Removal Cntrls	Controls based on accident analysis (Surface Leak Resulting in Pool).	E2
102AW-01-TEMP02	Release of liquid radioactive waste from transfer pipe to Tank 241-AW-102 due to leaks overflowing from underground structure	Piping leak due to exceeding the design temperature of the pipe by transferring high temperature waste	SC: Trans Leak Detect Syss SS: Tank Level Detect Syss	LCO: Trans Leak Detect Syss AC: Trans Cntrls (Leak Prevention/ Detect/Cntrl)	SC: Trans Leak Detect Syss SS: Tank Level Detect Syss SC: Trans Sys Cvrs	LCO: Trans Sys Cvrs LCO: Trans Leak Detect Syss AC: Trans Cntrls (Leak Detect/Cntrl) AC: Emergency Prep (Significant Release) AC: Trans Pump Admin Lock Cntrls AC: Trans Sys Cvr Removal Cntrls	Controls based on accident analysis (Surface Leak Resulting in Pool).	E2

Table 5.4-3. Safety Structures, Systems, and Components and Technical Safety Requirements for Potentially Severe (E3 and E2) Environmental Consequences. (107 Sheets)

ID	Hazardous Condition	Cause	Preventive SSCs	Preventive TSRs	Mitigative SSCs	Mitigative TSRs	Memo	Env Cons
102AW-02-LEVE03	Release of radioactive liquid from Tank 241-AW-102 due to overfilling	Failure to stop transfer causes overfilling of tank	SC: Trans Leak Detect Syss SC: Primary Tank Leak Detect Syss SS: Tank Level Detect Syss	LCO: Primary Tank Leak Detect Syss AC: Trans Cntrls (Leak Prevention/ Detect/Cntrl)	SC: Trans Leak Detect Syss SC: Primary Tank Leak Detect Syss SS: Tank Level Detect Syss SC: Trans Sys Cvrs	LCO: Trans Sys Cvrs LCO: Trans Leak Detect Syss LCO: Primary Tank Leak Detect Syss AC: Trans Cntrls (Leak Detect/Cntrl) AC: Emergency Prep (Significant Release) AC: Trans Pump Admin Lock Cntrls AC: Trans Sys Cvr Removal Cntrls	Controls based on accident analysis (Surface Leak Resulting in Pool).	E2
102AW-02-LEVE04	Release of radioactive liquid from Tank 241-AW-102 due to overfilling	Misrouting causes overfilling of tank	SC: Trans Leak Detect Syss SC: Primary Tank Leak Detect Syss SC: Pressure Switch Interlocks or Alarms (Water Service Lines) SS: Tank Level Detect Syss SS: Salt Well Flow Totalizer	LCO: Service Water Pressure Detect Syss LCO: Primary Tank Leak Detect Syss AC: Trans Cntrls (Leak Prevention/ Detect/Cntrl)	SC: Trans Leak Detect Syss SC: Primary Tank Leak Detect Syss SS: Tank Level Detect Syss SS: Salt Well Flow Totalizer SC: Trans Sys Cvrs	LCO: Trans Sys Cvrs LCO: Trans Leak Detect Syss LCO: Primary Tank Leak Detect Syss AC: Trans Cntrls (Leak Detect/Cntrl) AC: Emergency Prep (Significant Release) AC: Trans Pump Admin Lock Cntrls AC: Trans Sys Cvr Removal Cntrls	Controls based on accident analysis (Surface Leak Resulting in Pool).	E2

Table 5.4-3. Safety Structures, Systems, and Components and Technical Safety Requirements for Potentially Severe (E3 and E2) Environmental Consequences. (107 Sheets)

ID	Hazardous Condition	Cause	Preventive SSCs	Preventive TSRs	Mitigative SSCs	Mitigative TSRs	Memo	Env Cons
102AW-02-LEVE05	Release of radioactive liquid from Tank 241-AW-102 to the soil column due to gross overfilling of tank (Pool)	Misrouting causes overfilling of tank	SC: Trans Leak Detect Syss SC: Primary Tank Leak Detect Syss SC: Pressure Switch Interlocks or Alarms (Water Service Lines) SS: Tank Level Detect Syss SS: Salt Well Flow Totalizer	LCO: Service Water Pressure Detect Syss LCO: Primary Tank Leak Detect Syss AC: Trans Cntrls (Leak Prevention/ Detect/Cntrl)	SC: Trans Leak Detect Syss SC: Primary Tank Leak Detect Syss SS: Tank Level Detect Syss SS: Salt Well Flow Totalizer SC: Trans Sys Cvrs	LCO: Trans Sys Cvrs LCO: Trans Leak Detect Syss LCO: Primary Tank Leak Detect Syss AC: Trans Cntrls (Leak Detect/Cntrl) AC: Emergency Prep (Significant Release) AC: Trans Pump Admin Lock Cntrls AC: Trans Sys Cvr Removal Cntrls	Controls based on accident analysis (Surface Leak Resulting in Pool).	E2
102AW-02-PRES 102AW-02-TEMP	Release of radioactive aerosols from Tank 241-AW-102 due to pressurization	Evaporator dump when intrusive activity is occurring which causes pressurization	None required	None required	None required	None required	No controls required based on accident analysis (Evaporator Dump).	E2
102AW-02-PRES01	Release of radioactive aerosols from Tank 241-AW-102 due to fire/ explosion in waste tank (Dome Collapse)	Flammable concentration of gases in tank vapor space with spark source	SC: Primary Tank Leak Detect Syss SC: DST/AWF Ventilation	LCO: DST and AWF Tank Ventilation Syss LCO: Primary Tank Leak Detect Syss AC: Flammability Cntrls AC: Ign Cntrls AC: Ign Cntrls (Lightning) AC: Flammable Gas Mon Cntrls	None required	None required	Controls based on BIO Appendix E, LA-UR-92-3196 and accident analysis (Natural Phenomena - Lightning).	E2
102AW-02-PRES02	Release of toxic gases from Tank 241-AW-102 due to chemical reaction in waste	Transfer of incompatible waste to Tank 241-AW-102 causes tank gas accumulation	None required	None required	None required	None required	No controls required based on accident analysis (Mixing of Incompatible Waste - Toxic Vapor Generation).	E2

Table 5.4-3. Safety Structures, Systems, and Components and Technical Safety Requirements for Potentially Severe (E3 and E2) Environmental Consequences. (107 Sheets)

ID	Hazardous Condition	Cause	Preventive SSCs	Preventive TSRs	Mitigative SSCs	Mitigative TSRs	Memo	Env Cons
102AW-02-TEMP01	Release of radioactive aerosols from Tank 241-AW-102 due to boiling waste	High heat waste causing boiling	SS: Temperature Mon Sys SS: Waste Tank Level Detect Sys	LCO: DST and AWF Tanks Waste Temperature Cntrls AC: Trans Cntrls (Tank Bump Topography)	None required	None required	Controls based on accident analysis (Tank Bump) for DST & AWF tanks.	E2
102AW-02-TEMP02	Release of radioactive aerosols from Tank 241-AW-102 due to tank bump	High heat waste combined with loss of ventilation contributes to tank bump	SS: Temperature Mon Sys SS: Tank Level Detect Sys	LCO: DST and AWF Tanks Waste Temperature Cntrls AC: Trans Cntrls (Waste Compatibility) AC: Process Instrumentation and Measuring and Test Equipment	None required	None required	Controls based on accident analysis (Tank Bump).	E2
102AW-03-LEVE01	Release of radioactive aerosols from Tank 241-AW-102 due to fire/ explosion in annulus	Flammable concentration of gases in annulus vapor space due to waste leak into annulus and spark source	SC: Primary Tank Leak Detect Syss	LCO: Primary Tank Leak Detect Syss AC: Ign Cntrls	None required	None required	Controls based on BIO Appendix E.	E2
102AW-03-LEVE02	Release of radioactive aerosols from Tank 241-AW-102 due to fire/ explosion in annulus	Flammable concentration of gases in annulus vapor space due to waste mis-transfer into annulus and spark source	SC: Primary Tank Leak Detect Syss	LCO: Primary Tank Leak Detect Syss AC: Trans Cntrls (Mis-routing) AC: Ign Cntrls	None required	None required	Controls based on BIO Appendix E; and the accident analysis (Spray Leak in Structure or from Overground Waste Trans Lines).	E2
102AW-03-TEMP02	Release of radioactive aerosols from Tank 241-AW-102 due to fire/ explosion in annulus damaging primary tank	Flammable concentration of gases in annulus vapor space due to spill of fuel into annulus and spark source	None required	AC: Ign Cntrls (Vehicles)	None required	AC: Emergency Prep (In-tank Fuel Fire)	Controls based on accident analysis (In-Tank Fuel Fire/ Deflagration).	E2

Table 5.4-3. Safety Structures, Systems, and Components and Technical Safety Requirements for Potentially Severe (E3 and E2) Environmental Consequences. (107 Sheets)

ID	Hazardous Condition	Cause	Preventive SSCs	Preventive TSRs	Mitigative SSCs	Mitigative TSRs	Memo	Env Cons
102AW-04-STRU04	Release of liquid radioactive waste from Tank 241-AW-102 central pump pit due to leak to soil	Piping leak and leak from pump pit due to equipment drop	SC: Trans Sys Cvr	LCO: Trans Sys Cvrs AC: Trans Pump Admin Lock Cntrls AC: Trans Sys Cvr Removal Cntrls AC: Dome Loading Cntrls (Lifting Cntrls)	None required	None required	Controls based on accident analysis (Tank Failure Due to Excessive Loads; and Surface Leak Resulting in Pool).	E2
102AW-04-STRU05	Release of liquid radioactive waste from Tank 241-AW-102 central pump pit due to leak to soil	Piping leak and leak from pump pit due to seismic event	SS: Pipe Encasements	AC: Trans Pump Admin Lock Cntrls	SS: Trans Leak Detect Syss SS: Tank Level Detect Syss	LCO: Trans Leak Detect Syss AC: Trans Cntrls (Leak Detect/Cntrl) AC: Emergency Prep (Seismic)	Controls based on accident analyses (Subsurface Leak Remaining Subsurface; and Natural Phenomena - Seismic).	E2
102AW-08-COMP02	Release of fission product gases and aerosols from Tank 241-AW-102 due to criticality	Misrouting of waste creates critical mass	None required	AC: Nuclear Criticality Safety AC: Trans Cntrls (Mis-routing)	None required	None required	Controls based on accident analysis (Nuclear Criticality; and Surface Leak Resulting in Pool).	E2
102AW-08-COMP02A	Release of fission product gases and aerosols from Tank 241-AW-102 due to criticality	Human error - addition of excess fissile material to Tank 241-AW-102 creates critical mass	None required	AC: Nuclear Criticality Safety	None required	None required	Controls based on accident analysis (Nuclear Criticality).	E2
102AW-08-COMP03	Release of fission product gases and aerosols from Tank 241-AW-102 due to criticality	Non-uniform distribution of fissile material (horizontally) creates critical mass	None required	AC: Nuclear Criticality Safety	None required	None required	Controls based on accident analysis (Nuclear Criticality).	E2
102AW-08-COMP04	Release of fission product gases and aerosols from Tank 241-AW-102 due to criticality	Non-uniform distribution of fissile material (vertically) due to addition of "rich" layer	None required	AC: Nuclear Criticality Safety	None required	None required	Controls based on accident analysis (Nuclear Criticality).	E2
102AW-08-COMP05	Release of fission product gases and aerosols from Tank 241-AW-102 due to criticality	Over concentration of waste creates critical mass	None required	AC: Nuclear Criticality Safety	None required	None required	Controls based on accident analysis (Nuclear Criticality).	E2

Table 5.4-3. Safety Structures, Systems, and Components and Technical Safety Requirements for Potentially Severe (E3 and E2) Environmental Consequences. (107 Sheets)

ID	Hazardous Condition	Cause	Preventive SSCs	Preventive TSRs	Mitigative SSCs	Mitigative TSRs	Memo	Env Cons
102AW-09-TEMP01	Release of radioactive aerosols from Tank 241-AW-102 atmosphere due to tank bump	High heat waste plus loss of cooling and/or mixing pump (not yet installed) operation	SS: Temperature Mon Sys SS: Tank Level Detect Sys	LCO: DST and AWF Tanks Waste Temperature Cntrls AC: Trans Cntrls (Waste Compatibility) AC: Process Instrumentation and Measuring and Test Equipment	None required	None required	Controls based on accident analysis (Tank Bump).	E2
102S-01.a1	Radioactive/hazardous liquid released to soil surface from tank diversion box/access pit to the ground surface due to misrouting a transfer.	Human error (jumper/blank installation) + Mistransfer to Tank 241-S-102 (450-600 Kgal) overfills tank	SC: Trans Leak Detect Syss SS: Tank Level Detect Syss SS: Salt Well Flow Totalizer	LCO: Trans Leak Detect Syss AC: Trans Cntrls (Leak Prevention/ Detect/Cntrl)	SC: Trans Leak Detect Syss SS: Tank Level Detect Syss SS: Salt Well Flow Totalizer SC: Trans Sys Cvrs	LCO: Trans Sys Cvrs LCO: Trans Leak Detect Syss AC: Trans Cntrls (Leak Detect/Cntrl) AC: Emergency Prep (Significant Release) AC: Trans Pump Admin Lock Cntrls AC: Trans Sys Cvr Removal Cntrls	Controls based on accident analysis (Surface Leak Resulting in Pool).	E2
102S-01.b2	Radioactive liquid released to soil surface from Tank 241-S-102 pump pit due to leak in jumpers connecting tank transfer lines SL-140, SN-242 during saltwell pumping.	Jumper failure + Drain plugged	SC: Trans Leak Detect Syss SS: Tank Level Detect Syss SS: Salt Well Flow Totalizer	LCO: Trans Leak Detect Syss AC: Trans Cntrls (Leak Prevention/ Detect/Cntrl)	SC: Trans Leak Detect Syss SS: Tank Level Detect Syss SS: Salt Well Flow Totalizer SC: Trans Sys Cvrs	LCO: Trans Sys Cvrs LCO: Trans Leak Detect Syss AC: Trans Cntrls (Leak Detect/Cntrl) AC: Emergency Prep (Significant Release) AC: Trans Pump Admin Lock Cntrls AC: Trans Sys Cvr Removal Cntrls	Controls based on accident analysis (Surface Leak Resulting in Pool).	E2

Table 5.4-3. Safety Structures, Systems, and Components and Technical Safety Requirements for Potentially Severe (E3 and E2) Environmental Consequences. (107 Sheets)

ID	Hazardous Condition	Cause	Preventive SSCs	Preventive TSRs	Mitigative SSCs	Mitigative TSRs	Memo	Env Cons
102S-01.b3	Radioactive liquid released to the soil subsurface from leaks in transfer lines SL-140, SN-242. (Plume)	Line leak during saltwell pumping (corrosion)	SS: Pipe Encasements	AC: Trans Pump Admin Lock Cntrls	SS: Trans Leak Detect Syss SS: Tank Level Detect Syss SS: Salt Well Flow Totalizer	LCO: Trans Leak Detect Syss AC: Trans Cntrls (Leak Detect/Cntrl)	Controls based on accident analysis (Subsurface Leak Remaining Subsurface).	E2
102S-02.b2	Release of radioactive aerosols to atmosphere from Tank 241-S-102 due to flammable gas from tank igniting in pump pit and burning paint off pump pit	H2/Ammonia production migrates into pump pit + Spark (pumps not operating)	SC: SST Ventilation	LCO: SST Ventilation Syss AC: Ign Cntrls AC: Flammable Gas Mon Cntrls AC: Trans Cntrls (Leak Prevention/ Detect)	None required	AC: Emergency Prep (Fire in Contaminated Area)	Controls based on BIO Appendix E and accident analysis (Fire in Contaminated Area).	E2
102S-03.b3	Release of radioactive aerosols to atmosphere from Tank 241-S-102 due to burning fuel flowing into waste tank due to ignition of fuel from ruptured gas tank.	Vehicle drives into open riser puncturing gas tank + Ignition	None required	AC: Ign Cntrls (Vehicles)	None required	AC: Emergency Prep (In-tank Fuel Fire)	Controls based on accident analysis (In-Tank Fuel Fire/ Deflagration).	E2
102S-04.a1b	Release of radioactive contaminants in Tank 241-S-102 liquid waste to the soil due to crack in tank with water intrusion	Structural or other stresses	SS: Service Water Flow Totalizer	AC: Tank Service Water Intrusion Mon Program	None	None	These are applicable controls from the Subsurface Leak Resulting in Pool accident analysis. Service water leak is the only significant source of water intrusion.	E2
102S-04.a1bb	Release of radioactive contaminants in Tank 241-S-102 liquid waste to the soil due to crack in tank with water intrusion	Corrosion	SS: Service Water Flow Totalizer	AC: Tank Service Water Intrusion Mon Program	None	None	These are applicable controls from the Subsurface Leak Resulting in Pool accident analysis. Service water leak is the only significant source of water intrusion.	E2

Table 5.4-3. Safety Structures, Systems, and Components and Technical Safety Requirements for Potentially Severe (E3 and E2) Environmental Consequences. (107 Sheets)

ID	Hazardous Condition	Cause	Preventive SSCs	Preventive TSRs	Mitigative SSCs	Mitigative TSRs	Memo	Env Cons
102S-04.e1b	Release of radioactive aerosols contained in Tank 241-S-102 vapor space to atmosphere due to due to ignition of flammable gas in tank causing HEPA failure	Concentration of H2 or Ammonia (or other flammable gasses) above LFL + Ignition source	SC: SST Ventilation	LCO: SST Ventilation Syss AC: Ign Cntrls AC: Flammable Gas Mon Cntrls	None required	AC: HEPA Filter Cntrls (Source Term)	Controls based on BIO Appendix E; and accident analysis (HEPA Filter Failure - Exposure to High Temperature or Pressure).	E2
106C-01F	Release of radioactive and/or hazardous material from Tank 241-C-106, blown out HEPA filters and/or discharge out cover blocks due to high tank pressure	Blockage of inlet, outlet and cascade lines	None required	None required	None required	AC: HEPA Filter Cntrls (Source Term)	Controls based on accident analysis (HEPA Filter Failure - Exposure to High Temperature or Pressure) and low accident frequency.	E2
106C-01Ma	Release of radioactive and/or hazardous material from Tank 241-C-106 due to flammable gas fire/explosion in tank caused by high temperature (dome collapse)	Chemical reaction in tank	SC: SST Ventilation	LCO: SST Ventilation Syss AC: Flammability Cntrls AC: Ign Cntrls AC: Flammable Gas Mon Cntrls AC: Trans Cntrls (Mis-routing)	None required	None required	Controls based on BIO Appendix E and accident analysis (Subsurface Leak Resulting in Pool). Auto-ignition temperature of H2 at LFL is 400 C.	E2
106C-01N	Release of radioactive and/or hazardous material from Tank 241-C-106 to atmosphere due to criticality.	Criticality in waste tank from high temperature	None required	AC: Nuclear Criticality Safety	None required	None required	Controls based on accident analysis (Nuclear Criticality).	E2
106C-04A	Release of radioactive and/or hazardous material from Tank 241-C-106 due to tank damage caused by flammable gas fire/ explosion because of high flammable gas content in the tank (dome collapse)	High flammable gas content due to chemical reaction in sludge layer	SC: SST Ventilation	LCO: SST Ventilation Syss AC: Flammability Cntrls AC: Ign Cntrls AC: Flammable Gas Mon Cntrls AC: Ign Cntrls (Lightning)	None required	None required	Controls based on BIO Appendix E; and accident analysis (Natural Phenomena - Lightning).	E2
106C-11E	Release of unfiltered tank atmosphere from Tank 241-C-106 due to damaged ductwork	Damage to ventilation ductwork upstream of filters	None required	None required	None required	None required	No controls required based on accident analysis (Unfiltered Release).	E2

Table 5.4-3. Safety Structures, Systems, and Components and Technical Safety Requirements for Potentially Severe (E3 and E2) Environmental Consequences. (107 Sheets)

ID	Hazardous Condition	Cause	Preventive SSCs	Preventive TSRs	Mitigative SSCs	Mitigative TSRs	Memo	Env Cons
106C-12F	Release of radioactive and/or hazardous material from Tank 241-C-106 tank due to waste reaction in tank	Added chemicals to tank instead of normal water addition	None required	AC: Trans Cntrls (pH)	None required	None required	The transfer control for this hazardous condition is from the representative accident Mixing of Incompatible Material - Tank Pressurization and is solely pH control because of the larger volumes in waste storage tanks compared to the analyzed accident.	E2
107AN-01-LEVE01	Release of caustic material from truck tank due to leak (aerosol spray)	Open valve on truck with pressurized tank transfer.	None required	AC: Caustic Transfer Controls	None required	AC: Caustic Transfer Controls	Controls based on accident analysis (Caustic Spray Leak).	E2
107AN-01-LEVE02	Release of caustic material from truck tank due to leak (aerosol spray)	Truck tank leak	None required	None required	None required	None required	No controls required based on low accident frequency.	E2
107AN-01-LEVE03	Release of caustic material from truck tank due to leak	Failure to secure truck	None	AC: Caustic Transfer Controls	None	AC: Caustic Transfer Controls	Controls based on accident analysis (Caustic Spray Leak).	E2
107AN-01-TEMP02	Spray release of caustic material from truck tank due to high temperature	Fire in gas tank	None required	None required	None required	None required	No controls required based on low accident frequency.	E2

Table 5.4-3. Safety Structures, Systems, and Components and Technical Safety Requirements for Potentially Severe (E3 and E2) Environmental Consequences. (107 Sheets)

ID	Hazardous Condition	Cause	Preventive SSCs	Preventive TSRs	Mitigative SSCs	Mitigative TSRs	Memo	Env Cons
107AN-02-FLOW01	Release of radioactive aerosols from Tank 241-AN-107 due to surface chemical reaction	Transfer of incompatible chemical to tank via chemical addition system due to vendor or paperwork error	None required	AC: Trans Cntrls (pH)	None required	None required	The transfer control for this hazardous condition is from the representative accident Mixing of Incompatible Material - Tank Pressurization and is solely pH control because of the larger volumes in waste storage tanks compared to the analyzed accident.	E2
107AN-02-FLOW02	Release of toxic vapors from Tank 241-AN-107 due to surface chemical reaction	Transfer of incompatible chemical to tank via chemical addition system due to vendor or paperwork error	None required	AC: Trans Cntrls (pH)	None required	None required	The transfer control for this hazardous condition is from the representative accident Mixing of Incompatible Material - Tank Pressurization and is solely pH control because of the larger volumes in waste storage tanks compared to the analyzed accident.	E2
107AN-02-FLOW03	Release of concentrated caustic solution to surface from transfer piping due to leak	Caustic solution transfer line leak	None	AC: Caustic Transfer Controls	None	AC: Caustic Transfer Controls	Controls based on accident analysis (Caustic Spray Leak).	E2
107AN-02-PRES	Release of caustic aerosol from caustic truck transfer piping due to spray leak	Piping/hose leak initiated by various causes	None required	AC: Caustic Transfer Controls	None required	AC: Caustic Transfer Controls	Controls based on accident analysis (Caustic Spray Leak).	E2

Table 5.4-3. Safety Structures, Systems, and Components and Technical Safety Requirements for Potentially Severe (E3 and E2) Environmental Consequences. (107 Sheets)

ID	Hazardous Condition	Cause	Preventive SSCs	Preventive TSRs	Mitigative SSCs	Mitigative TSRs	Memo	Env Cons
114SX-02.b	Radioactive liquid released from tank pump pit to the ground surface due to inadvertent pumping activity (pool)	Human error (not normal activity)	SC: Trans Leak Detect Syss SS: Tank Level Detect Syss SS: Salt Well Flow Totalizer	LCO: Trans Leak Detect Syss AC: Trans Cntrls (Leak Prevention/ Detect/Cntrl)	SC: Trans Leak Detect Syss SS: Tank Level Detect Syss SS: Salt Well Flow Totalizer SC: Trans Sys Cvrs	LCO: Trans Sys Cvrs LCO: Trans Leak Detect Syss AC: Trans Cntrls (Leak Detect/Cntrl) AC: Emergency Prep (Significant Release) AC: Trans Pump Admin Lock Cntrls AC: Trans Sys Cvr Removal Cntrls	Controls based on accident analysis (Surface Leak Resulting in Pool).	E2
114SX-04.b.1.a.3	Release of radioactive liquids to the soil from Tank 241-SX-114 due to tank bottom failure	Human error: Closure of Tank 241-SX-114 exhaust butterfly valve isolating tank from exhaust plenum Resulting in tank degradation	SC: Ventilation Sys SS: Temperature Mon	LCO: SST Waste Temperature Cntrls LCO: SST Ventilation Sys	None	None	These are applicable controls from the Flammable Gas Deflagrations - DST accident analysis.	E2
114SX-04.b.1.b.3 a	Release of radioactive liquids to the soil from Tank 241-SX-114 due to tank bottom failure	Ducting failure due to bad welds reduces heat removal rate Resulting in tank degradation	SC: Ventilation Sys SS: Temperature Mon	LCO: SST Waste Temperature Cntrls LCO: SST Ventilation Sys	None	None	These are applicable controls from the Flammable Gas Deflagrations - DST accident analysis.	E2
114SX-04.b.1.b.3 b	Release of radioactive liquids to the soil from Tank 241 SX-114 due to tank bottom failure (leak to soil)	Tank failure due to seismic activity Resulting in tank degradation	None	None	None	AC: Emergency Prep (Seismic)	These are applicable controls from the Natural Phenomena - Seismic accident analysis.	E2

Table 5.4-3. Safety Structures, Systems, and Components and Technical Safety Requirements for Potentially Severe (E3 and E2) Environmental Consequences. (107 Sheets)

ID	Hazardous Condition	Cause	Preventive SSCs	Preventive TSRs	Mitigative SSCs	Mitigative TSRs	Memo	Env Cons
114SX-04.b.1.c.3	Release of radioactive liquids to the soil from Tank 241-SX-114 due to tank bottom failure (from high heat)	Exhauster failure Fan failure Filter rupture (low differential pressure shutdown) Resulting in tank degradation	SC: Ventilation Sys SS: Temperature Mon	LCO: SST Waste Temperature Cntrls LCO: SST Ventilation Sys	None	None	These are applicable controls from the Flammable Gas Deflagrations - DST accident analysis.	E2
114SX-04.b.1.d.3	Release of radioactive liquids to the soil from Tank 241-SX-114 due to tank bottom failure	Filter plugging results in lack of heat removal with high temperatures degrading dome strength	SC: Ventilation Sys SS: Temperature Mon	LCO: SST Waste Temperature Cntrls LCO: SST Ventilation Sys	None	None	These are applicable controls from the Flammable Gas Deflagrations - DST accident analysis.	E2
114SX-04.b.3b	Release of radioactive aerosols from head space of Tank 241-SX-114 to atmosphere through exhaust HEPA filter due to flammable gas ignition in the headspace (dome collapse)	Flammable gas fire/explosion in Tank 241-SX-114 (Note: Tank 241-SX-114 is NOT currently identified as a Flammable Gas Watch List Tank) Requires spark to be present	SC: SST Ventilation	LCO: SST Ventilation Syss AC: Flammability Cntrls AC: Ign Cntrls AC: Flammable Gas Mon Cntrls AC: Ign Cntrls (Lightning)	None required	None required	Controls based on BIO Appendix E; and accident analysis (Natural Phenomena - Lightning).	E2
114SX-04.c.1	Release or radioactive aerosols from Tank 241-SX-114 head space to atmosphere due to mechanical failure of exhauster HEPA filter	Plenum structure failure pierces filter	None required	None required	SS: Ventilation CAM Interlock Syss	LCO: Ventilation Stack CAM Interlock Syss AC: HEPA Filter Cntrls (Source Term)	Controls based on accident analysis (Unfiltered Release).	E2
114SX-04.c.2.a	Release of radioactive aerosols from Tank 241-SX-114 head space to atmosphere due to exhauster HEPA filter seal failure	HEPA filter seal failure	None required	None required	SS: Ventilation CAM Interlock Syss	LCO: Ventilation Stack CAM Interlock Syss	Controls based on accident analysis (Unfiltered Release).	E2
114SX-04.c.2.b	Release of radioactive aerosols from Tank 241-SX-114 head space to atmosphere due to exhauster defective HEPA filter	Defective HEPA filter	None required	None required	SS: Ventilation CAM Interlock Syss	LCO: Ventilation Stack CAM Interlock Syss	Controls based on accident analysis (Unfiltered Release).	E2

Table 5.4-3. Safety Structures, Systems, and Components and Technical Safety Requirements for Potentially Severe (E3 and E2) Environmental Consequences. (107 Sheets)

ID	Hazardous Condition	Cause	Preventive SSCs	Preventive TSRs	Mitigative SSCs	Mitigative TSRs	Memo	Env Cons
114SX-04.c.2.c	Release of radioactive aerosols from Tank 241-SX-114 head space to atmosphere due to exhauster HEPA filter deterioration	Deteriorated HEPA filter	None required	None required	SS: Ventilation CAM Interlock Syss	LCO: Ventilation Stack CAM Interlock Syss	Controls based on accident analysis (Unfiltered Release).	E2
114SX-04.c.2.d	Release of radioactive aerosols from Tank 241-SX-114 head space to atmosphere due to exhauster HEPA filter installation errors	Improper installation (human error)	None required	None required	SS: Ventilation CAM Interlock Syss	LCO: Ventilation Stack CAM Interlock Syss	Controls based on accident analysis (Unfiltered Release).	E2
114SX-05.b.2	Release of radioactive aerosols from Tank 241-SX-114 head space to atmosphere due to sudden flashing of water added to tank for cooling	Flashing (adding cold liquid to hot tank contents)	None required	None required	None required	None required	No controls required based on low accident frequency.	E2
114SX-06.a.2	Release of radioactive liquids to the soil due to failure of Tank 241-SX-114 from corrosion	Corrosion and the addition of liquid	None	None	None	None	There are no applicable controls from the Subsurface Leak Remaining Subsurface accident analysis.	E2
204AR-01H	Release of airborne and waterborne contaminates outside building on track spur, and potential contamination in unloader room from rail car due to spilling rail car contents	Rail car rupture due to collision with other or a derailment	None required	None required	None required	AC: Source Inventory Cntrls	Controls based on accident analysis (Leak from Railcar/ Tank Trailer).	E2
204AR-01I	Release of airborne and waterborne contaminates outside building on track spur, and potential contamination in unloader room from rail car due to leak	Rail car leak due to tanker corrosion or other degradation	None required	None required	None required	AC: Source Inventory Cntrls	Controls based on accident analysis (Leak from Railcar/ Tank Trailer).	E2

Table 5.4-3. Safety Structures, Systems, and Components and Technical Safety Requirements for Potentially Severe (E3 and E2) Environmental Consequences. (107 Sheets)

ID	Hazardous Condition	Cause	Preventive SSCs	Preventive TSRs	Mitigative SSCs	Mitigative TSRs	Memo	Env Cons
204AR-07A	Release of liquid radioactive waste and high airborne in unloading room from the Tank 241-AY-102 due to reverse pumping of Tank 241-AY-102 contents back to 204-AR	Pump in pit 02D starts and pumps back to the 204-AR building through the transfer piping and leaks	None required	AC: Trans Cntrls (Mis-routing) AC: Trans Pump Admin Lock Cntrls	SC: 204-AR CAM Interlock SS: 204-AR Building	LCO: Ventilation Stack CAM Interlock Syss	Controls based on accident analysis (Spray Leak in Structure or from Overground Waste Transfer Lines) with additional controls to address 204-AR spray leaks.	E2
204AR-09A	Release of airborne and waterborne contamination from the sump pit due to ruptured piping during transfer.	Rupture of transfer piping section above the sump pit	None required	None required	None required	AC: Source Inventory Cntrls	Controls based on accident analysis (Leak from Railcar/ Tank Trailer).	E2
204AR-09B	Release of airborne and radiation contamination in the unloader room from trailer or rail car leak due to high level in sump pit	Catastrophic leak from a large liquid source such as a trailer or rail car	None required	None required	None required	AC: Source Inventory Cntrls	Controls based on accident analysis (Leak from Railcar/ Tank Trailer).	E2
204AR-09C	Release of airborne and radiation contamination in the unloader room from rail car due to gross overfilling of catch tank	Gross overfilling of catch tank either from large source such as the trailers or rail cars or continual pumping of transfer water through a leaky pipe	None required	None required	None required	AC: Source Inventory Cntrls	Controls based on accident analysis (Leak from Railcar/ Tank Trailer).	E2
244AR-01.c.09	Release of radioactive aerosols from vessel headspace into canyon atmosphere due to flammable gas ignition	Ignition of flammable gas that has collected in piping and tank dome	SC: 244-AR TK-002 Level (Ventilation)	LCO: 244-AR TK-002 Ventilation Sys AC: Ign Cntrls AC: Flammable Gas Mon Cntrls	None required	None required	Controls based on BIO Appendix E.	E2
244AR-02.a.03	Release of radioactive liquid in the form of aerosols contained in a cell to the exterior of the 244-AR facility due to ignition of flammable gas	Fire/explosion from hydrogen buildup	SC: 244-AR TK-002 Level (Ventilation)	LCO: 244-AR TK-002 Ventilation Sys AC: Ign Cntrls AC: Flammable Gas Mon Cntrls	None required	None required	Controls based on BIO Appendix E.	E2

Table 5.4-3. Safety Structures, Systems, and Components and Technical Safety Requirements for Potentially Severe (E3 and E2) Environmental Consequences. (107 Sheets)

ID	Hazardous Condition	Cause	Preventive SSCs	Preventive TSRs	Mitigative SSCs	Mitigative TSRs	Memo	Env Cons
244AR-02.a.06	Release of radioactive liquid contained in a cell due to leak pathways in the cell structure	Rain or snow water intrusion	None	None	None	None	There are no applicable controls from the Subsurface Leak Remaining Subsurface accident analysis.	E2
244AR-02.a.07	Release of radioactive aerosols from vessel headspace to building atmosphere with eventual release outside facility due to overfilling of sump causing tank failure	Rain or snow water intrusion	None required	None required	None required	None required	No controls required based on low accident frequency.	E2
244AR-02.a.09	Release of radioactive liquid to soil from leaking sump filled by leaking jumper	Jumper leak (general)	SC: Trans Leak Detect Syss	LCO: Trans Leak Detect Syss AC: Trans Cntrls (Leak Prevention and Mis-routing) AC: Trans Pump Admin Lock Cntrls	SS: Salt Well Flow Totalizer SC: Trans Leak Detect Sys SS: Tank Level Detect Sys	LCO: Trans Leak Detect Syss AC: Trans Cntrls (Leak Detect/Cntrl) AC: Emergency Prep (Significant Release)	These are applicable controls from the Subsurface Leak Remaining Subsurface accident analysis. These controls also address this hazardous condition for worker risk by notifying personnel of leak.	E2
244AR-02.a.11	Release of radioactive liquid to soil from leaking sump filled by leaking jumper	Jumper (B Plant to AY Tank Farm through cell) leak	SC: Trans Leak Detect Syss	LCO: Trans Leak Detect Syss AC: Trans Cntrls (Leak Prevention and Mis-routing) AC: Trans Pump Admin Lock Cntrls	SS: Salt Well Flow Totalizer SC: Trans Leak Detect Sys SS: Tank Level Detect Sys	LCO: Trans Leak Detect Syss AC: Trans Cntrls (Leak Detect/Cntrl) AC: Emergency Prep (Significant Release)	These are applicable controls from the Subsurface Leak Remaining Subsurface accident analysis. These controls also address this hazardous condition for worker risk by notifying personnel of leak.	E2
244AR-02.a.13	Release of radioactive liquid to soil from leaking sump filled by leaking tank	Tank leak	None	None	None	None	There are no applicable controls.	E2

Table 5.4-3. Safety Structures, Systems, and Components and Technical Safety Requirements for Potentially Severe (E3 and E2) Environmental Consequences. (107 Sheets)

ID	Hazardous Condition	Cause	Preventive SSCs	Preventive TSRs	Mitigative SSCs	Mitigative TSRs	Memo	Env Cons
244AR-03.a.04	Release of radioactive aerosols into cell due to ignition of flammable gas in 244-AR Vault tank headspace	Fire/explosion due to ignition of accumulated flammable gas	SC: 244-AR TK-002 Level (Ventilation)	LCO: 244-AR TK-002 Ventilation Sys AC: Ign Cntrls AC: Flammable Gas Mon Cntrls	None required	None required	Controls based on BIO Appendix E.	E2
244AR-03.a.05	Release of radioactive aerosols from tanks headspace due to ventilation system blockage	Ventilation and risers blocked while jetting occurring	None required	None required	None required	None required	No applicable SSCs or TSRs - Hazardous condition not credible for steam jetting because steam has been isolated from 244-AR.	E2
244AR-03.a.08	Release of radioactive aerosols created by boiling waste to the cell atmosphere	Steam being supplied to tank heating/cooling coils	None required	None required	None required	None required	No applicable SSCs or TSRs - Hazardous condition not credible for steam jetting because steam has been isolated from 244-AR.	E2
244AR-03.a.09	Release of radioactive aerosols created by criticality to the cell atmosphere	Criticality in waste	None required	AC: Nuclear Criticality Safety	None required	None required	Controls based on accident analysis (Nuclear Criticality).	E2
244AR-05.a.02	Release of radioactive material from facility due to seismic event which causes building collapse without cell collapse	Seismic event damages facility structure	None required	None required	None required	AC: Emergency Prep (Seismic)	Controls based on accident analysis (Natural Phenomena - Seismic).	E2
CCF-01	Radioactive and hazardous release from tanks due to extended loss of ventilation (over 6 months)	Sustained loss of offsite power	None required	None required	None required	None required	No controls required based on low accident frequency.	E2

Table 5.4-3. Safety Structures, Systems, and Components and Technical Safety Requirements for Potentially Severe (E3 and E2) Environmental Consequences. (107 Sheets)

ID	Hazardous Condition	Cause	Preventive SSCs	Preventive TSRs	Mitigative SSCs	Mitigative TSRs	Memo	Env Cons
CCF-07	Release of radioactive and hazardous materials from tank due to overfill	Disabled or unavailable staff to terminate transfer	SC: Trans Leak Detect Syss	LCO: Trans Leak Detect Syss	SC: Trans Leak Detect Syss SC: Trans Sys Cvrs SC: Trans Sys Supplemental Cvrs	LCO: Trans Sys Cvrs LCO: Trans Leak Detect Syss AC: Trans Pump Admin Lock Cntrls AC: Trans Sys Cvr Removal Cntrls JCO: Supplemental Cvrs	Controls based on accident analysis (Surface Leak Resulting in Pool).	E2
CDP-04	Release of radioactive contamination to soil surface from inactive pond due to flooding of inactive pond	Flooding	None	None	None	None	There are no applicable controls from the accident analysis.	E2
CDP-07	Release of liquid radioactive contamination to soil surface from active pond due to unspecified phenomena	Unspecified phenomena	None	None	None	None	There are no applicable controls from the Unplanned Excavation/Drilling in Pond/Crib/Ditch accident analysis.	E2
CDP-10	Release of radioactive contamination to soil surface from excavation or drilling in cribs, ditches or ponds that disturbs radioactive material	Excavation or drilling	None required	None required	None required	None required	No controls required based on accident analysis (Unplanned Excavation/Drilling in Pond/Crib/Ditch).	E2
COB-01	Release of radioactive and/or hazardous material from COB due to spray leak	Flange, gasket or valve, spray leak with COB lid removed	None required	AC: Trans Cntrls (Mis-routing) AC: Trans Pump Admin Lock Cntrls	SC: Trans Sys Cvrs	LCO: Trans Sys Cvrs AC: Trans Sys Cvr Removal Cntrls	Controls based on accident analysis (Spray Leak in Structure or from Overground Waste Transfer Lines).	E2

Table 5.4-3. Safety Structures, Systems, and Components and Technical Safety Requirements for Potentially Severe (E3 and E2) Environmental Consequences. (107 Sheets)

ID	Hazardous Condition	Cause	Preventive SSCs	Preventive TSRs	Mitigative SSCs	Mitigative TSRs	Memo	Env Cons
COB-02	Release of radioactive and/or hazardous material from COB due to spray leak	Flange, gasket or valve, spray leak with COB lid in place	None	AC: Trans Cntrls (Mis-routing) AC: Trans Pump Admin Lock Cntrls	SC: Trans Sys Cvrs SC: Trans Sys Supplemental Cvrs	LCO: Trans Sys Cvrs AC: Trans Sys Cvr Removal Cntrls AC: Trans Cntrls (Leak Detect/Cntrl) AC: Trans Pump Admin Lock Cntrls JCO: Supplemental Cvrs	These are applicable controls from the Spray Leak in Structure or from Overground Waste Transfer Lines accident analysis. These controls also address this hazardous condition for worker risk by prevention/minimizing of leak.	E2
COB-03	Release of radioactive and/or hazardous material from COB due to spray leak	Piping leak into COB due to chemical reaction degrading pipe, lid in place	None	AC: Trans Cntrls (Mis-routing) AC: Trans Cntrls (Leak Prevention/ Detect/Cntrl) AC: Trans Pump Admin Lock Cntrls	SC: Trans Sys Cvrs SC: Trans Sys Supplemental Cvrs	LCO: Trans Sys Cvrs AC: Trans Sys Cvr Removal Cntrls AC: Trans Cntrls (Leak Detect/Cntrl) AC: Trans Pump Admin Lock Cntrls JCO: Supplemental Cvrs	These are applicable controls from the Spray Leak in Structure or from Overground Waste Transfer Lines accident analysis. These controls address this hazardous condition for worker risk by preventing mis-transfers and minimizing exposure.	E2

Table 5.4-3. Safety Structures, Systems, and Components and Technical Safety Requirements for Potentially Severe (E3 and E2) Environmental Consequences. (107 Sheets)

ID	Hazardous Condition	Cause	Preventive SSCs	Preventive TSRs	Mitigative SSCs	Mitigative TSRs	Memo	Env Cons
COB-04	Release of radioactive and/or hazardous material from COB lid due to overflow of COB during transfer (pool)	Leak into COB with floor drain plugged, leak detector failed	SC: Trans Leak Detect Syss SS: Tank Level Detect Syss SS: Salt Well Flow Totalizer	LCO: Trans Leak Detect Syss AC: Trans Cntrls (Leak Prevention/ Detect/Cntrl)	SC: Trans Leak Detect Syss SS: Tank Level Detect Syss SS: Salt Well Flow Totalizer SC: Trans Sys Cvrs SC: Trans Sys Supplemental Cvrs	LCO: Trans Sys Cvrs LCO: Trans Leak Detect Syss AC: Trans Cntrls (Leak Detect/Cntrl) AC: Emergency Prep (Significant Release) AC: Trans Pump Admin Lock Cntrls AC: Trans Sys Cvr Removal Cntrls JCO: Supplemental Cvrs	Controls based on accident analysis (Surface Leak Resulting in Pool).	E2
COB-08	Release of radioactive and/or hazardous material from COB due to over filling of COB (pool)	Transfer pipe or riser rupture, backfilling lower part of COB then filling COB via the floor drain	SC: Trans Leak Detect Syss SS: Tank Level Detect Syss SS: Salt Well Flow Totalizer	LCO: Trans Leak Detect Syss AC: Trans Cntrls (Leak Prevention/ Detect/Cntrl)	SC: Trans Leak Detect Syss SS: Tank Level Detect Syss SS: Salt Well Flow Totalizer SC: Trans Sys Cvrs SC: Trans Sys Supplemental Cvrs	LCO: Trans Sys Cvrs LCO: Trans Leak Detect Syss AC: Trans Cntrls (Leak Detect/Cntrl) AC: Emergency Prep (Significant Release) AC: Trans Pump Admin Lock Cntrls AC: Trans Sys Cvr Removal Cntrls JCO: Supplemental Cvrs	Controls based on accident analysis (Surface Leak Resulting in Pool).	E2
CP-MSP-01	Release of radioactive or toxic material to soil surface (pool) from transfer line due to puncture of line during transfer	Human error caused puncture to transfer line during push operations	None required	AC: Excavation Cntrls	None required	None required	Controls based on accident analysis (Spray Leak From Underground Waste Transfer Lines).	E2

Table 5.4-3. Safety Structures, Systems, and Components and Technical Safety Requirements for Potentially Severe (E3 and E2) Environmental Consequences. (107 Sheets)

ID	Hazardous Condition	Cause	Preventive SSCs	Preventive TSRs	Mitigative SSCs	Mitigative TSRs	Memo	Env Cons
CP-MSP-03	Release of radioactive or toxic material to soil (plume) remaining subsurface from inactive transfer line due to puncture	Human error caused puncture to transfer line during push operations	None	AC: Excavation Cntrls	None	None	Controls based on accident analysis (Spray Leak From Underground Waste Transfer Lines).	E2
CP-MSP-08	Release of radioactive or toxic material to atmosphere from MISF Miscellaneous Inactive Storage Facilities due to flammable gas deflagration	Human error AND Mechanical failure of probe	None required	AC: Excavation Cntrls	None required	AC: Emergency Prep (Response)	Controls based on accident analysis (Spray Leak From Underground Waste Transfer Lines and; In-Tank Fuel Fire/Deflagration).	E2
CP-RMV-01	Release of radioactive or toxic material to soil (plume) remaining subsurface from inactive transfer line damaged during push operations	Human error caused puncture to inactive transfer line during push operations	None	AC: Excavation Cntrls	None	None	Controls based on accident analysis (Spray Leak From Underground Waste Transfer Lines and; In-Tank Fuel Fire/Deflagration).	E2
CP-SSP-03	Release of radioactive or toxic material to soil (plume) remaining subsurface from inactive transfer line due to puncture	Human error caused puncture to transfer line during push operations	None	AC: Excavation Cntrls	None	None	Controls based on accident analysis (Spray Leak From Underground Waste Transfer Lines and; In-Tank Fuel Fire/Deflagration).	E2
CRN-03-IB	Release of radioactive and/or toxic materials from facility due to MISF containment collapse	Human error results in excessive weight on top of containment	None required	AC: Dome Loading Cntrls (Excessive Loads)	None required	None required	Controls based on accident analysis (Tank Failure Due to Excessive Loads).	E2
CRN-04-IB	Release of radioactive and/or toxic materials from facility due to MISF containment collapse	Crane or rigging failures drop load resulting in large impact to top of containment	None required	AC: Dome Loading Cntrls (Lifting Cntrls)	None required	None required	Controls based on accident analysis (Tank Failure Due to Excessive Loads).	E2
CRN-05	Release of radioactive and/or toxic materials from pits and risers due to fuel tank fire in crane or support vehicle (see In-Tank Equipment Installation for tank fires)	Human error in positioning crane load	None required	AC: Ign Cntrls (Vehicles)	None required	AC: Emergency Prep (Fire in Contaminated Area)	Controls based on accident analysis (Fire in Contaminated Area).	E2

Table 5.4-3. Safety Structures, Systems, and Components and Technical Safety Requirements for Potentially Severe (E3 and E2) Environmental Consequences. (107 Sheets)

ID	Hazardous Condition	Cause	Preventive SSCs	Preventive TSRs	Mitigative SSCs	Mitigative TSRs	Memo	Env Cons
CRN-06	Release of radioactive and/or toxic materials from pits and risers due to fuel tank fire in crane or support vehicle (see In-Tank Equipment Installation for tank fires)	Mechanical failure in positioning crane load	None required	AC: Ign Cntrls (Vehicles) AC: Dome Loading Cntrls (Lifting Cntrls)	None required	AC: Emergency Prep (Fire in Contaminated Area)	Controls based on accident analyses (Fire in Contaminated Area; and Tank Failure Due to Excessive Loads, Vacuum, or Degradation).	E2
CRN-07	Release of radioactive and/or toxic materials from pits and risers due to fuel tank fire in crane or support vehicle (see In-Tank Equipment Installation for tank fires)	Crane hits electrical lines/ supplies	None required	AC: Ign Cntrls (Vehicles) AC: Dome Loading Cntrls (Lifting Cntrls)	None required	AC: Emergency Prep (Fire in Contaminated Area)	Controls based on accident analyses (Fire in Contaminated Area; and Tank Failure Due to Excessive Loads, Vacuum, or Degradation).	E2
CRN-08	Release of radioactive and/or toxic materials from pits and risers due to fuel tank fire in crane or support vehicle (see In-Tank Equipment Installation for tank fires)	Lightning	None required	AC: Ign Cntrls (Lightning)	None required	AC: Emergency Prep (Fire in Contaminated Area)	Controls based on accident analysis (Natural Phenomena - Lightning; and Fire in Contaminated Area).	E2
CRN-09	Release of radioactive and/or toxic materials from ventilation system due to crane damage	Human error in positioning crane load	None required	AC: Dome Loading Cntrls (Lifting Cntrls)	None required	None required	Controls based on accident analysis (Tank Failure Due to Excessive Loads).	E2
CRN-10	Release of radioactive and/or toxic materials from ventilation system due to crane damage	Mechanical failure in positioning crane load	None required	AC: Dome Loading Cntrls (Lifting Cntrls)	None required	None required	Controls based on accident analysis (Tank Failure Due to Excessive Loads).	E2
CRN-11-IC	Release of radioactive and/or toxic materials from facility due to containment top collapse damage by boom failure (pool)	Human error: improper load assembly, rigging, crane overloaded	None required	AC: Dome Loading Cntrls (Lifting Cntrls)	None required	AC: Emergency Prep (Significant Release)	Controls based on accident analyses (Surface Leak Resulting in Pool; and Tank Failure Due to Excessive Loads).	E2

Table 5.4-3. Safety Structures, Systems, and Components and Technical Safety Requirements for Potentially Severe (E3 and E2) Environmental Consequences. (107 Sheets)

ID	Hazardous Condition	Cause	Preventive SSCs	Preventive TSRs	Mitigative SSCs	Mitigative TSRs	Memo	Env Cons
CRN-12-IC	Release of radioactive and/or toxic materials from facility due to containment top collapse by boom failure (pool)	Mechanical failure: corrosion, faulty materials	None required	AC: Dome Loading Cntrls (Lifting Cntrls)	None required	AC: Emergency Prep (Significant Release)	Controls based on accident analyses (Surface Leak Resulting in Pool; and Tank Failure Due to Excessive Loads).	E2
CRN-13-IC	Release of radioactive and/or toxic materials from facility due to containment top collapse damage by boom failure	High wind or seismic event	None required	AC: Dome Loading Cntrls (High Wind)	None required	AC: Emergency Prep (Seismic)	Controls base on accident analyses (Natural Phenomena - High Wind; and Natural Phenomena - Seismic).	E2
CRN-21-IA	Release of radioactive or toxic materials from underground facility bottom due to loss of vertical load control, dropping crane load into facility (subsurface leak)	Human error: improper load assembly, rigging, positioning error	None	AC: Dome Loading Cntrl	None	None	These are applicable controls from the Tank Failure Due to Excessive Loads accident analysis.	E2
CRN-21-IB	Release of radioactive or toxic materials from aboveground facility bottom due to loss of vertical load control, dropping crane load into facility (surface pool)	Human error: improper load assembly, rigging, positioning error	None required	AC: Dome Loading Cntrls (Lifting Cntrls)	None required	None required	Controls based on accident analysis (Tank Failure Due to Excessive Loads).	E2
CRN-22-IA	Release of radioactive or toxic materials from facility bottom due to loss of vertical load control, dropping crane load into facility	Mechanical failure: corrosion, faulty materials, hydraulics	None	AC: Dome Loading Cntrl	None	None	These are applicable controls from the Tank Failure Due to Excessive Loads accident analysis.	E2
CRN-22-IB	Release of radioactive or toxic materials from aboveground facility bottom due to loss of vertical load control, dropping crane load into facility (surface pool)	Mechanical failure: corrosion, faulty materials, hydraulics	None required	AC: Dome Loading Cntrls (Lifting Cntrls)	None required	None required	Controls based on accident analysis (Tank Failure Due to Excessive Loads).	E2

Table 5.4-3. Safety Structures, Systems, and Components and Technical Safety Requirements for Potentially Severe (E3 and E2) Environmental Consequences. (107 Sheets)

ID	Hazardous Condition	Cause	Preventive SSCs	Preventive TSRs	Mitigative SSCs	Mitigative TSRs	Memo	Env Cons
CRN-23-IB	Release of radioactive or toxic materials from aboveground facility bottom due to loss of vertical load control, dropping crane load into facility	High wind or seismic event	None required	None required	None required	None required	No controls required based on accident analysis (Above Ground Structure Failure).	E2
DCN-04-I	Decontamination personnel are contaminated, release of aerosol outside immediate area from equipment being decontaminated due to wind	Wind/tornado	None	None	None	None	There are no applicable controls from the Natural Phenomena - High Wind accident analysis.	E2
EE-11	Release of radioactive and hazardous materials from tank due to overfilling	Water line breaks and overfills tank	SS: Service Water Flow Totalizer	AC: Tank Service Water Intrusion Mon Program	SS: Service Water Flow Totalizer	AC: Tank Service Water Intrusion Mon Program	Controls based on accident analysis (Surface Leak Resulting in Pool).	E2
EE-16	Release of radioactive and hazardous material from transfer line spray leak due to excavation error	Excavation into waste transfer line during a transfer	None required	AC: Excavation Cntrls	None required	None required	Controls based on accident analysis (Spray Leak From Underground Waste Transfer Lines).	E2
I-222S-1-CMP-C	Release (potential spray leak) of 222-S lab waste to atmosphere in diversion box or 244-S Pump Pit due to increased corrosion from failure to add sodium hydroxide	Human error - failure to add sodium hydroxide	None required	AC: Trans Cntrls (Waste Compatibility) AC: Trans Pump Admin Lock Cntrls	SC: Trans Sys Cvrs	LCO: Trans Sys Cvrs AC: Trans Sys Cvr Removal Cntrls	Controls based on accident analysis (Spray Leak in Structure or from Overground Waste Transfer Lines; and Mixing of Incompatible Material Tank Pressurization).	E2
I-222S-1-LVL-A	Release (steam) of aerosols and entrained particulates to atmosphere through ventilation due to over pressurization of 244-S DCRT caused by sending just steam to tank farm	Human error - failing to shut off steam after Tank 219-S-102 is empty	None required	None required	None required	AC: HEPA Filter Cntrls (Source Term)	Controls based on accident analysis (Steam Intrusion from Interfacing Syss).	E2

Table 5.4-3. Safety Structures, Systems, and Components and Technical Safety Requirements for Potentially Severe (E3 and E2) Environmental Consequences. (107 Sheets)

ID	Hazardous Condition	Cause	Preventive SSCs	Preventive TSRs	Mitigative SSCs	Mitigative TSRs	Memo	Env Cons
I-222S-1-RXN-A	Release of aerosols and/or toxic vapors from receiver tank due adverse chemical reactions from incompatible waste	Transfer of incompatible waste	None required	AC: Trans Cntrls (pH)	None required	AC: HEPA Filter Cntrls (Aerosol Testing)	Controls based on accident analysis (Mixing of Incompatible Waste - Tank Pressurization).	E2
I-222S-2-FLW-C	Release of aerosols and/or toxic vapors from receiver tank due adverse chemical reactions from incompatible waste	Human error - incorrect valve line up	None required	AC: Trans Cntrls (pH)	None required	None required	Controls based on accident analysis (Mixing of Incompatible Waste - Tank Pressurization).	E2
I-222S-2-LEK-B	Release of 222-S lab waste to the atmosphere due to spray leak at the diversion box or pump pit, caused by corrosion in the pipe	Corrosion in pipe line	None required	AC: Trans Cntrls (Mis-routing) AC: Trans Pump Admin Lock Cntrls	SC: Trans Sys Cvrs	LCO: Trans Sys Cvrs AC: Trans Sys Cvr Removal Cntrls	Controls based on accident analysis (Spray Leak in Structure or from Overground Waste Transfer Lines).	E2
I-222S-2-LEK-C	Release of 222-S lab waste to the atmosphere due to spray leak at the rupture of the line	Inadvertent excavation of line	None required	AC: Excavation Cntrls	None required	None required	Controls based on accident analysis (Spray Leak From Underground Waste Transfer Lines).	E2
I-222S-2-LEK-E	Release of 222-S lab waste to the atmosphere due to spray leak at the diversion box or pump pit, caused by rupture at pipe connections from a seismic event	Seismic event	None required	AC: Trans Pump Admin Lock Cntrls	SC: Trans Sys Cvrs	LCO: Trans Sys Cvrs AC: Trans Sys Cvr Removal Cntrls AC: Emergency Prep (Seismic)	Controls based on accident analyses (Spray Leak in Structure or from Overground Waste Transfer Lines; and Natural Phenomena - Seismic).	E2
I-222S-2-PRS-A	Release (steam) of aerosols and particulates to atmosphere through ventilation due to over pressurization of 244-S DCRT caused by sending just steam to tank farm	Steam reducer valve fails open	None required	None required	None required	AC: HEPA Filter Cntrls (Source Term)	Controls based on accident analysis (Steam Intrusion from Interfacing Syss).	E2
I-242A-1-LEK-B	Release of waste from Feed Tank 241-AW-102 to the atmosphere due to spray leak at the diversion box or pump pit, caused by corrosion in the pipe	Corrosion in pipe line	None required	AC: Trans Pump Admin Lock Cntrls AC: Trans Cntrls (Mis-routing)	SC: Trans Sys Cvrs	LCO: Trans Sys Cvrs AC: Trans Sys Cvr Removal Cntrls	Controls based on accident analysis (Spray Leak From Underground Waste Transfer Lines).	E2

Table 5.4-3. Safety Structures, Systems, and Components and Technical Safety Requirements for Potentially Severe (E3 and E2) Environmental Consequences. (107 Sheets)

ID	Hazardous Condition	Cause	Preventive SSCs	Preventive TSRs	Mitigative SSCs	Mitigative TSRs	Memo	Env Cons
I-242A-1-LEK-C	Release of waste from Feed Tank 241-AW-102 to the atmosphere due to spray leak at the rupture of the line	Inadvertent excavation of line causes spray leak	None required	AC: Excavation Cntrls	None required	None required	Controls based on accident analysis (Spray Leak From Underground Waste Transfer Lines).	E2
I-242A-1-LEK-E	Release of waste from Feed Tank 241-AW-102 to the atmosphere due to spray leak at the diversion box or pump pit, caused by rupture at pipe connections	Seismic event causes spray leak	None required	AC: Trans Pump Admin Lock Cntrls	SC: Trans Sys Cvrs	LCO: Trans Sys Cvrs AC: Trans Sys Cvr Removal Cntrls AC: Emergency Prep (Seismic)	Controls based on accident analyses (Spray Leak in Structure or from Overground Waste Transfer Lines; and Natural Phenomena - Seismic).	E2
I-242A-2-FLW-A	Release of aerosols to the atmosphere through unsealed cracks in the cover blocks due to over pressurization of the receiver tank and possible structural damage to the tank	Human error - pump is run at maximum speed	None required	None required	None required	None required	No controls required based on accident analysis (Evaporator Dump).	E2
I-242A-2-FLW-B	Release of aerosols to the atmosphere through 12 inch opening in inlet station due to over pressurization of the receiver tank and possible structural damage to the tank	Human error - pump is run at maximum speed	None required	None required	None required	None required	No controls required based on accident analysis (Evaporator Dump).	E2
I-242A-2-LEK-B	Release of slurry tank waste to the atmosphere due to spray leak at the diversion boxes or pump pit, caused by corrosion in the pipe	Corrosion in pipe line	None required	AC: Trans Pump Admin Lock Cntrls AC: Trans Cntrls (Mis-routing)	SC: Trans Sys Cvrs	LCO: Trans Sys Cvrs AC: Trans Sys Cvr Removal Cntrls	Controls based on accident analysis (Spray Leak From Underground Waste Transfer Lines).	E2
I-242A-2-LEK-C	Release of slurry tank waste to the atmosphere due to spray leak at the rupture of the line	Inadvertent excavation of line causes spray leak	None required	AC: Excavation Cntrls	None required	None required	Controls based on accident analysis (Spray Leak From Underground Waste Transfer Lines).	E2

Table 5.4-3. Safety Structures, Systems, and Components and Technical Safety Requirements for Potentially Severe (E3 and E2) Environmental Consequences. (107 Sheets)

ID	Hazardous Condition	Cause	Preventive SSCs	Preventive TSRs	Mitigative SSCs	Mitigative TSRs	Memo	Env Cons
I-242A-2-LEK-E	Release of slurry tank waste to the atmosphere due to spray leak at the diversion box or pump pit, caused by rupture at pipe connections	Seismic event causes leak	None required	AC: Trans Pump Admin Lock Cntrls	SC: Trans Sys Cvrs	LCO: Trans Sys Cvrs AC: Trans Sys Cvr Removal Cntrls AC: Emergency Prep (Seismic)	Controls based on accident analyses (Spray Leak in Structure or from Overground Waste Transfer Lines; and Natural Phenomena - Seismic).	E2
I-242A-2-VSC-A	Release of aerosols in receiver tank due to tank burp from over concentration, potential to generate conditions similar to Tank 241-SY-101, "Tank Burp" due to hydrogen being trapped in thick solution (lower energy than tank bump)	Human error - over concentration of slurry at evaporator	None required	None required	None required	None required	No controls required based on accident analysis (Evaporator Dump).	E2
I-242A-3-FLW-A	Release of aerosols to the atmosphere through unsealed cracks in the cover blocks due to over pressurization of the feed tank and possible structural damage to the tank	Uncontrolled pot dump at evaporator (loss of electricity or air)	None required	None required	None required	None required	No controls required based on accident analysis (Evaporator Dump).	E2
I-242A-3-FLW-B	Release of aerosols to the atmosphere through 12 inch opening in inlet station due to over pressurization of the feed tank and possible structural damage to the tank	Uncontrolled pot dump at evaporator (loss of electricity or air)	None required	None required	None required	None required	No controls required based on accident analysis (Evaporator Dump).	E2
I-242A-6-FLW-B	Release of diluted high level tank waste from Feed Tank 241-AW-102 caused by overfilling Tank 241-AW-102 and annulus, aggravated by an uncontrolled evaporator dump when a raw water leak occurs in evaporator condenser room	Rupture of raw water line in condenser/pump room	None required	None required	None required	None required	No controls at TWRS; required controls implemented at 242-A Evaporator.	E2

Table 5.4-3. Safety Structures, Systems, and Components and Technical Safety Requirements for Potentially Severe (E3 and E2) Environmental Consequences. (107 Sheets)

ID	Hazardous Condition	Cause	Preventive SSCs	Preventive TSRs	Mitigative SSCs	Mitigative TSRs	Memo	Env Cons
I-242A-7-FLW-A	Release of aerosols through the risers due to loss of instrument air which causes an uncontrolled evaporator dump and failure to detect changes in feed tank pressure	Compressor fails and 241-AW Tank Farm air supplied from 242-A	None required	None required	None required	None required	No controls required based on accident analysis (Evaporator Dump).	E2
I-242A-7-FLW-B	Release of aerosols through the risers due to loss of instrument air which causes an uncontrolled evaporator dump and failure to detect changes in feed tank pressure	Valve inadvertently closed, 241-AW Tank Farm air supplied from 242-A	None required	None required	None required	None required	No controls required based on accident analysis (Evaporator Dump).	E2
I-242A-7-FLW-C	Release of aerosols through the risers due to loss of instrument air which causes an uncontrolled evaporator dump and failure to detect changes in feed tank pressure	Filter plugged, 241-AW Tank Farm air supplied from 242-A	None required	None required	None required	None required	No controls required based on accident analysis (Evaporator Dump).	E2
I-242S-2-FLW-A	Release of tank waste diluted with contaminated fire water to the soil due to flooding the pump room from a fire main break and pumping the water to Tank 241-SY-102 which overfills the tank and floods pit through risers	Break in fire main	SC: Trans Leak Detect Syss SS: Tank Level Detect Syss	LCO: Trans Leak Detect Syss AC: Trans Cntrls (Leak Prevention/ Detect/Cntrl)	SC: Trans Leak Detect Syss SS: Tank Level Detect Syss SC: Trans Sys Cvrs SC: Trans Sys Supplemental Cvrs	LCO: Trans Sys Cvrs LCO: Trans Leak Detect Syss AC: Trans Cntrls (Leak Detect/Cntrl) AC: Emergency Prep (Significant Release) AC: Trans Pump Admin Lock Cntrls AC: Trans Sys Cvr Removal Cntrls JCO: Supplemental Cvrs	Controls based on accident analysis (Surface Leak Resulting in Pool).	E2

Table 5.4-3. Safety Structures, Systems, and Components and Technical Safety Requirements for Potentially Severe (E3 and E2) Environmental Consequences. (107 Sheets)

ID	Hazardous Condition	Cause	Preventive SSCs	Preventive TSRs	Mitigative SSCs	Mitigative TSRs	Memo	Env Cons
I-242S-2-FLW-E	Release of high level waste to the ground outside the 242-S building due to unmitigated reverse flow to the pump room from Tank 241-SY-102	Human error - incorrect valve line up	SS: Tank Level Detect Syss	AC: Trans Cntrls (Leak Prevention/ Detect)	SS: Tank Level Detect Syss	AC: Trans Cntrls (Leak Detect)	Controls based on accident analysis (Surface Leak Resulting in Pool).	E2
I-242S-2-LEK-B	Release of contaminated water to the atmosphere due to spray leak at the diversion box or pump pit, caused by corrosion in the pipe	Corrosion in pipe line causes spray leak	None required	AC: Trans Pump Admin Lock Cntrls AC: Trans Cntrls (Mis-routing)	SC: Trans Sys Cvrs	LCO: Trans Sys Cvrs AC: Trans Sys Cvr Removal Cntrls	Controls based on accident analysis (Spray Leak From Underground Waste Transfer Lines).	E2
I-242S-2-LEK-C	Release of contaminated water to the atmosphere due to spray leak at the rupture of the line from excavation	Inadvertent excavation of line causes spray leak	None required	AC: Excavation Cntrls	None required	None required	Controls based on accident analysis (Spray Leak From Underground Waste Transfer Lines).	E2
I-242S-2-LEK-E	Release of contaminated water to the atmosphere due to spray leak at the diversion box or pump pit, caused by rupture at pipe connections from seismic event	Seismic event	None required	AC: Trans Pump Admin Lock Cntrls	SC: Trans Sys Cvrs	LCO: Trans Sys Cvrs AC: Trans Sys Cvr Removal Cntrls AC: Emergency Prep (Seismic)	Controls based on accident analyses (Spray Leak in Structure or from Overground Waste Transfer Lines; and Natural Phenomena - Seismic).	E2
I-242S-4-FLW-C	Release of high level waste to the ground outside the 242-S building due to unmitigated reverse flow to the condenser room	Human error - incorrect valve line up	SS: Tank Level Detect Syss	AC: Trans Cntrls (Leak Prevention/ Detect)	SS: Tank Level Detect Syss	AC: Trans Cntrls (Leak Detect)	Controls based on accident analysis (Surface Leak Resulting in Pool).	E2

Table 5.4-3. Safety Structures, Systems, and Components and Technical Safety Requirements for Potentially Severe (E3 and E2) Environmental Consequences. (107 Sheets)

ID	Hazardous Condition	Cause	Preventive SSCs	Preventive TSRs	Mitigative SSCs	Mitigative TSRs	Memo	Env Cons
I-242S-4-FLW-D	Release of tank waste diluted with contaminated water to the soil due to flooding the condenser room which is pumped to Tank 241-SY-102 and overfills the tank and floods pit through risers	Break in fire main	SC: Trans Leak Detect Syss SS: Tank Level Detect Syss	LCO: Trans Leak Detect Syss AC: Trans Cntrls (Leak Prevention/ Detect/Cntrl)	SC: Trans Leak Detect Syss SS: Tank Level Detect Syss SC: Trans Sys Cvrs SC: Trans Sys Supplemental Cvrs	LCO: Trans Sys Cvrs LCO: Trans Leak Detect Syss AC: Trans Cntrls (Leak Detect/Cntrl) AC: Emergency Prep (Significant Release) AC: Trans Pump Admin Lock Cntrls AC: Trans Sys Cvr Removal Cntrls JCO: Supplemental Cvrs	Controls based on accident analysis (Surface Leak Resulting in Pool).	E2
I-242S-4-LEK-E	Release of contaminated water to the atmosphere due to spray leak at the diversion box or pump pit, caused by rupture at pipe connections from an seismic event	Seismic event causes spray leak	None required	AC: Trans Pump Admin Lock Cntrls	SC: Trans Sys Cvrs	LCO: Trans Sys Cvrs AC: Trans Sys Cvr Removal Cntrls AC: Emergency Prep (Seismic)	Controls based on accident analyses (Spray Leak in Structure or from Overground Waste Transfer Lines; and Natural Phenomena - Seismic).	E2
I-BPLANT-1-CMP-B	Release (spray leak) of low level waste at diversion box from transfer of low pH material resulting in increased corrosion in pipe	Human error - failure to add sodium hydroxide leads to corrosion and leak in pipe	None required	AC: Trans Cntrls (Waste Compatibility) AC: Trans Pump Admin Lock Cntrls	SC: Trans Sys Cvrs	LCO: Trans Sys Cvrs AC: Trans Sys Cvr Removal Cntrls	Controls based on accident analyses (Spray Leak in Structure or from Overground Waste Transfer Lines; and Mixing of Incompatible Material - Tank Pressurization).	E2
I-BPLANT-2-FLW-D	Release of aerosols and/or toxic vapors from receiver tank due to transfer of incompatible waste from B Plant	Human error - communication error between B Plant and TWRS causes transfer of incompatible waste	None required	AC: Trans Cntrls (pH)	None required	None required	Controls based on accident analysis (Mixing of Incompatible Waste - Tank Pressurization).	E2

Table 5.4-3. Safety Structures, Systems, and Components and Technical Safety Requirements for Potentially Severe (E3 and E2) Environmental Consequences. (107 Sheets)

ID	Hazardous Condition	Cause	Preventive SSCs	Preventive TSRs	Mitigative SSCs	Mitigative TSRs	Memo	Env Cons
I-BPLANT-2-LEK-B	Release of low level waste to the atmosphere due to spray leak at the diversion box or pump pit, caused by corrosion in the pipe	Corrosion in pipe line causes spray leak	None required	AC: Trans Pump Admin Lock Cntrls AC: Trans Cntrls (Mis-routing)	SC: Trans Sys Cvrs	LCO: Trans Sys Cvrs AC: Trans Sys Cvr Removal Cntrls	Controls based on accident analysis (Spray Leak From Underground Waste Transfer Lines).	E2
I-BPLANT-2-LEK-C	Release of low level waste to the atmosphere due to spray leak at the rupture of the line from excavation	Inadvertent excavation of line causes spray leak	None required	AC: Excavation Cntrls	None required	None required	Controls based on accident analysis (Spray Leak From Underground Waste Transfer Lines).	E2
I-BPLANT-2-LEK-E	Release of low level waste to the atmosphere due to spray leak at the diversion box or pump pit, caused by rupture at pipe connections from seismic event	Seismic event causes spray leak	None required	AC: Trans Pump Admin Lock Cntrls	SC: Trans Sys Cvrs	LCO: Trans Sys Cvrs AC: Trans Sys Cvr Removal Cntrls AC: Emergency Prep (Seismic)	Controls based on accident analyses (Spray Leak in Structure or from Overground Waste Transfer Lines; and Natural Phenomena - Seismic).	E2
I-PFP-1-AGT-A	Release of fission product gases and aerosols from receiver tank due to potential for solids to collect in D-5, If mixed later, potential for composition of next batch to exceed Criticality Prevention Specifications (CPS); potential "Criticality Issue"	Human error or agitator fails results in criticality	None required	AC: Nuclear Criticality Safety	None required	None required	Controls based on accident analysis (Nuclear Criticality).	E2
I-PFP-1-CMP-B	Release of fission product gases and aerosols from receiver tank due to, potential for localized concentration of fissile materials in receiver tank from failure to add ferric nitrates; potential "Criticality Issue"	Failure to add ferric nitrates, results in criticality	None required	AC: Nuclear Criticality Safety	None required	None required	Controls based on accident analysis (Nuclear Criticality).	E2

Table 5.4-3. Safety Structures, Systems, and Components and Technical Safety Requirements for Potentially Severe (E3 and E2) Environmental Consequences. (107 Sheets)

ID	Hazardous Condition	Cause	Preventive SSCs	Preventive TSRs	Mitigative SSCs	Mitigative TSRs	Memo	Env Cons
I-PFP-1-CMP-D	Release of fission product gases and aerosols from receiver tank due to excess fissile material in waste, potential to exceed criticality prevention specification requirements for shipment; potential "Criticality Issue"	Excess fissile content added to waste results in criticality	None required	AC: Nuclear Criticality Safety	None required	None required	Controls based on accident analysis (Nuclear Criticality).	E2
I-PFP-2-LEK-B	Release of TRU mixed waste to the atmosphere due to spray leak at the diversion box or pump pit, caused by corrosion in the pipe	Corrosion in pipe line causes spray leak	None required	AC: Trans Pump Admin Lock Cntrls AC: Trans Cntrls (Mis-routing)	SC: Trans Sys Cvrs	LCO: Trans Sys Cvrs AC: Trans Sys Cvr Removal Cntrls	Controls based on accident analysis (Spray Leak From Underground Waste Transfer Lines).	E2
I-PFP-2-LEK-C	Release of TRU mixed waste to the atmosphere due to spray leak at the rupture of the line	Inadvertent excavation of line	None required	AC: Excavation Cntrls	None required	None required	Controls based on accident analysis (Spray Leak From Underground Waste Transfer Lines).	E2
I-PFP-2-LEK-E	Release of TRU mixed waste to the atmosphere due to spray leak at the diversion box or pump pit, caused by rupture at pipe connections	Seismic event causes spray leak.	None required	AC: Trans Pump Admin Lock Cntrls	SC: Trans Sys Cvrs	LCO: Trans Sys Cvrs AC: Trans Sys Cvr Removal Cntrls AC: Emergency Prep (Seismic)	Controls based on accident analyses (Spray Leak in Structure or from Overground Waste Transfer Lines; and Natural Phenomena - Seismic).	E2
I-PFP-2-TMP-B	Release (steam) of aerosols and entrained particulate from 244 TX ventilation system due to saturating HEPAs with steam sending higher pressure steam to steam jet, gassing it out	Failure of steam reducer	None required	None required	None required	AC: HEPA Filter Cntrls (Source Term)	Controls based on accident analysis (Steam Intrusion from Interfacing Syss).	E2
I-PFP-3-LEK-B	Release of TRU mixed waste to the atmosphere due to spray leak at the diversion box or pump pit, caused by corrosion in the pipe	Corrosion in pipe line causes spray leak	None required	AC: Trans Pump Admin Lock Cntrls AC: Trans Cntrls (Mis-routing)	SC: Trans Sys Cvrs	LCO: Trans Sys Cvrs AC: Trans Sys Cvr Removal Cntrls	Controls based on accident analysis (Spray Leak From Underground Waste Transfer Lines).	E2

Table 5.4-3. Safety Structures, Systems, and Components and Technical Safety Requirements for Potentially Severe (E3 and E2) Environmental Consequences. (107 Sheets)

ID	Hazardous Condition	Cause	Preventive SSCs	Preventive TSRs	Mitigative SSCs	Mitigative TSRs	Memo	Env Cons
I-PFP-3-LEK-C	Release of TRU mixed waste to the atmosphere due to spray leak at the rupture of the line	Inadvertent excavation of line	None required	AC: Excavation Cntrls	None required	None required	Controls based on accident analysis (Spray Leak From Underground Waste Transfer Lines).	E2
I-PFP-3-LEK-E	Release of TRU mixed waste to the atmosphere due to spray leak at the diversion box or pump pit, caused by rupture at pipe connections	Seismic event causes spray leak	None required	AC: Trans Pump Admin Lock Cntrls	SC: Trans Sys Cvrs	LCO: Trans Sys Cvrs AC: Trans Sys Cvr Removal Cntrls AC: Emergency Prep (Seismic)	Controls based on accident analyses (Spray Leak in Structure or from Overground Waste Transfer Lines; and Natural Phenomena - Seismic).	E2
I-PUREX-1-AGT-B	Release (spray leak) of TRU waste from PUREX at diversion box due to leak from increased corrosion caused by transfer of acidic waste	Human error or mechanical failure - agitator fails or is not turned on	None required	AC: Trans Cntrls (Waste Compatibility) AC: Trans Pump Admin Lock Cntrls	SC: Trans Sys Cvrs	LCO: Trans Sys Cvrs AC: Trans Sys Cvr Removal Cntrls	Controls based on accident analyses (Spray Leak in Structure or from Overground Waste Transfer Lines; and Mixing of Incompatible Material - Tank Pressurization).	E2
I-PUREX-1-CMP-B	Release (spray leak) of TRU waste from PUREX at diversion box due to leak from increased corrosion caused by transfer of acidic waste	Human error - failure to add sodium hydroxide to low level waste results in corrosion and causes spray leak	None required	AC: Trans Cntrls (Waste Compatibility) AC: Trans Pump Admin Lock Cntrls	SC: Trans Sys Cvrs	LCO: Trans Sys Cvrs AC: Trans Sys Cvr Removal Cntrls	Controls based on accident analyses (Spray Leak in Structure or from Overground Waste Transfer Lines; and Mixing of Incompatible Material - Tank Pressurization).	E2
I-PUREX-1-LVL-A	Release of aerosols from Tank 241-AW-105 through cracks in the cover block due to pressurizing tank from transfer of steam	Human error - failure to shut off steam jet when U-3 is empty	None required	None required	None required	AC: HEPA Filter Cntrls (Source Term)	Controls based on accident analysis (Steam Intrusion from Interfacing Syss).	E2
I-PUREX-2-LEK-B	Release of TRU waste from PUREX to the atmosphere due to spray leak at the diversion box or pump pit, caused by corrosion in the pipe	Corrosion in pipe line causes spray leak	None required	AC: Trans Pump Admin Lock Cntrls AC: Trans Cntrls (Mis-routing)	SC: Trans Sys Cvrs	LCO: Trans Sys Cvrs AC: Trans Sys Cvr Removal Cntrls	Controls based on accident analysis (Spray Leak From Underground Waste Transfer Lines).	E2

Table 5.4-3. Safety Structures, Systems, and Components and Technical Safety Requirements for Potentially Severe (E3 and E2) Environmental Consequences. (107 Sheets)

ID	Hazardous Condition	Cause	Preventive SSCs	Preventive TSRs	Mitigative SSCs	Mitigative TSRs	Memo	Env Cons
I-PUREX-2-LEK-C	Release of TRU waste from PUREX to the atmosphere due to spray leak at the rupture of the line from inadvertent excavation	Inadvertent excavation of line causes spray leak	None required	AC: Excavation Cntrls	None required	None required	Controls based on accident analysis (Spray Leak From Underground Waste Transfer Lines).	E2
I-PUREX-2-LEK-E	Release of TRU waste from PUREX to the atmosphere due to spray leak at the diversion box or pump pit, caused by seismic event	Seismic event causes spray leak	None required	AC: Trans Pump Admin Lock Cntrls	SC: Trans Sys Cvrs	LCO: Trans Sys Cvrs AC: Trans Sys Cvr Removal Cntrls AC: Emergency Prep (Seismic)	Controls based on accident analyses (Spray Leak in Structure or from Overground Waste Transfer Lines; and Natural Phenomena - Seismic).	E2
I-PUREX-2-PRS-A	Release (steam) of aerosols and particulates through cracks in the cover block from the receiver tank due to tank pressurization which gases out the steam jet	Steam reducer fails	None required	None required	None required	AC: HEPA Filter Cntrls (Source Term)	Controls based on accident analysis (Steam Intrusion from Interfacing Syss).	E2
I-PUREX-3-AGT-B	Release (spray leak) of TRU waste from PUREX at diversion box due to leak from increased corrosion caused by transfer of acidic waste	Agitator fails or is not turned on results in corrosion and causes spray leak	None required	AC: Trans Cntrls (Waste Compatibility) AC: Trans Pump Admin Lock Cntrls	SC: Trans Sys Cvrs	LCO: Trans Sys Cvrs AC: Trans Sys Cvr Removal Cntrls	Controls based on accident analyses (Spray Leak in Structure or from Overground Waste Transfer Lines; and Mixing of Incompatible Material - Tank Pressurization).	E2
I-PUREX-3-CMP-B	Release (spray leak) of TRU waste from PUREX at diversion box due to leak from increased corrosion caused by transfer of acidic waste	Human error - failure to add sodium hydroxide to low level waste results in spray leak	None required	AC: Trans Pump Admin Lock Cntrls AC: Trans Cntrls (Waste Compatibility)	SC: Trans Sys Cvrs	LCO: Trans Sys Cvrs AC: Trans Sys Cvr Removal Cntrls	Controls based on accident analysis (Spray Leak From Underground Waste Transfer Lines); and Mixing of Incompatible Material - Tank Pressurization).	E2

Table 5.4-3. Safety Structures, Systems, and Components and Technical Safety Requirements for Potentially Severe (E3 and E2) Environmental Consequences. (107 Sheets)

ID	Hazardous Condition	Cause	Preventive SSCs	Preventive TSRs	Mitigative SSCs	Mitigative TSRs	Memo	Env Cons
I-PUREX-3-CMP-E	Release of fission product gases and aerosols from receiver tank due to criticality caused by exceeding Criticality Prevention Specifications for shipment from PUREX	Transfer of L Cell sump water to Tank F-18 and eventually to the Tank Farms	None required	AC: Nuclear Criticality Safety	None required	None required	Controls based on accident analysis (Nuclear Criticality).	E2
I-PUREX-3-LVL-A	Release of aerosols from Tank 241-AW-105 through cracks in the cover block due to pressurizing tank from transfer of steam	Human error - failure to shut off steam jet when U-3 is empty	None required	None required	None required	AC: HEPA Filter Cntrls (Source Term)	Controls based on accident analysis (Steam Intrusion from Interfacing Syss).	E2
I-PUREX-4-FLW-B	Release (ground surface) of high level tank waste diluted with flush water from the receiver tank due to overfilling from sending excess water	Block valve on flush water inadvertently left opened or leaking	SC: Trans Leak Detect Syss SS: Tank Level Detect Syss	LCO: Trans Leak Detect Syss AC: Trans Cntrls (Leak Prevention/ Detect/Cntrl)	SC: Trans Leak Detect Syss SS: Tank Level Detect Syss SC: Trans Sys Cvrs	LCO: Trans Sys Cvrs LCO: Trans Leak Detect Syss AC: Trans Cntrls (Leak Detect/Cntrl) AC: Emergency Prep (Significant Release) AC: Trans Pump Admin Lock Cntrls AC: Trans Sys Cvr Removal Cntrls	Controls based on accident analysis (Surface Leak Resulting in Pool).	E2
I-PUREX-4-LEK-B	Release of TRU waste from PUREX to the atmosphere due to spray leak at the diversion box or pump pit, caused by corrosion in the pipe	Corrosion in pipe line causes spray leak	None required	AC: Trans Pump Admin Lock Cntrls AC: Trans Cntrls (Mis-routing)	SC: Trans Sys Cvrs	LCO: Trans Sys Cvrs AC: Trans Sys Cvr Removal Cntrls	Controls based on accident analysis (Spray Leak From Underground Waste Transfer Lines).	E2
I-PUREX-4-LEK-C	Release of TRU waste from PUREX to the atmosphere due to spray leak at the rupture of the line from excavation	Inadvertent excavation of line causes spray leak	None required	AC: Excavation Cntrls	None required	None required	Controls based on accident analysis (Spray Leak From Underground Waste Transfer Lines).	E2

Table 5.4-3. Safety Structures, Systems, and Components and Technical Safety Requirements for Potentially Severe (E3 and E2) Environmental Consequences. (107 Sheets)

ID	Hazardous Condition	Cause	Preventive SSCs	Preventive TSRs	Mitigative SSCs	Mitigative TSRs	Memo	Env Cons
I-PUREX-4-LEK-E	Release of TRU waste from PUREX to the atmosphere due to spray leak at the diversion box or pump pit, caused by rupture at pipe connections from seismic event	Seismic event causes spray leak	None required	AC: Trans Pump Admin Lock Cntrls	SC: Trans Sys Cvrs	LCO: Trans Sys Cvrs AC: Trans Sys Cvr Removal Cntrls AC: Emergency Prep (Seismic)	Controls based on accident analyses (Spray Leak in Structure or from Overground Waste Transfer Lines; and Natural Phenomena - Seismic).	E2
I-PUREX-4-PRS-A	Release of aerosols and particulates through cracks in the cover block from the receiver tank due to tank pressurization which gases out the steam jet	Steam reducer fails	None required	None required	None required	AC: HEPA Filter Cntrls (Source Term)	Controls based on accident analysis (Steam Intrusion from Interfacing Syss).	E2
I-TPLANT-1-CMP-B	Release (spray) of low level waste at diversion box from transfer of lower pH material resulting in increased corrosion in pipe	Human error - failure to add sodium hydroxide causes corrosion and associated spray leak	None required	AC: Trans Cntrls (Waste Compatibility) AC: Trans Pump Admin Lock Cntrls	SC: Trans Sys Cvrs	LCO: Trans Sys Cvrs AC: Trans Sys Cvr Removal Cntrls	Controls based on accident analysis (Spray Leak From Underground Waste Transfer Lines; and Mixing of Incompatible Material - Tank Pressurization).	E2
I-TPLANT-2-CMP-A	Release (steam) of aerosols and entrained particulates to atmosphere through ventilation due to over pressurization of 244-S DCRT caused by sending just steam to the tank farm	Human error - steam block valve inadvertently opened or failure to close valve when Tank 15-1 is low	None required	None required	None required	AC: HEPA Filter Cntrls (Source Term)	Controls based on accident analysis (Steam Intrusion from Interfacing Syss).	E2
I-TPLANT-2-LEK-B	Release of low level waste to the atmosphere due to spray leak at the diversion box or pump pit	Corrosion in pipe line causes spray leak	None required	AC: Trans Pump Admin Lock Cntrls AC: Trans Cntrls (Mis-routing)	SC: Trans Sys Cvrs	LCO: Trans Sys Cvrs AC: Trans Sys Cvr Removal Cntrls	Controls based on accident analysis (Spray Leak From Underground Waste Transfer Lines).	E2
I-TPLANT-2-LEK-C	Release of low level waste to the atmosphere due to spray leak at the rupture of the line from excavation	Inadvertent excavation of line causes spray leak	None required	AC: Excavation Cntrls	None required	None required	Controls based on accident analysis (Spray Leak From Underground Waste Transfer Lines).	E2

Table 5.4-3. Safety Structures, Systems, and Components and Technical Safety Requirements for Potentially Severe (E3 and E2) Environmental Consequences. (107 Sheets)

ID	Hazardous Condition	Cause	Preventive SSCs	Preventive TSRs	Mitigative SSCs	Mitigative TSRs	Memo	Env Cons
I-TPLANT-2-LEK-E	Release of low level waste to the atmosphere due to spray leak at the diversion box or pump pit, caused by rupture at pipe connections from seismic event	Seismic event causes spray leak	None required	AC: Trans Pump Admin Lock Cntrls	SC: Trans Sys Cvrs	LCO: Trans Sys Cvrs AC: Trans Sys Cvr Removal Cntrls AC: Emergency Prep (Seismic)	Controls based on accident analyses (Spray Leak in Structure or from Overground Waste Transfer Lines; and Natural Phenomena - Seismic).	E2
I-UPLANT-1-LEK-B	Release of low level waste to the ground at the rupture of the line	Inadvertent excavation of line	None required	AC: Excavation Cntrls	None required	None required	Controls based on accident analysis (Spray Leak From Underground Waste Transfer Lines) Excavation of a buried line leads to a surface leak.	E2
ITK-06	Release of radioactive and/or hazardous material from point of in-tank access (non-fire, non-explosion) due to criticality	Intrusive activity causes critical mass	None required	AC: Nuclear Criticality Safety	None required	None required	Controls based on accident analysis (Nuclear Criticality).	E2
ITK-06-1	Release of radioactive and/or hazardous material from point of in-facility access due to criticality within the in-facility waste during intrusive activity (non-fire, non-explosion)	Criticality from intrusive activity	None required	AC: Nuclear Criticality Safety	None required	None required	Controls based on accident analysis (Nuclear Criticality).	E2
ITK-07-IB	Release of radioactive and/or hazardous material from facility at surface due to breach of facility confinement (non-fire, non-explosion)	Dropped equipment in facility from human error or equipment failures (also see crane operations) Penetration of facility confinement with linear-force, high pressure, or rotational equipment from human error or equipment failure	None	AC: Dome Loading Cntrls (Lifting Cntrls)	None	None	These are applicable controls from the Tank Failure Due to Excessive Loads accident analysis.	E2

Table 5.4-3. Safety Structures, Systems, and Components and Technical Safety Requirements for Potentially Severe (E3 and E2) Environmental Consequences. (107 Sheets)

ID	Hazardous Condition	Cause	Preventive SSCs	Preventive TSRs	Mitigative SSCs	Mitigative TSRs	Memo	Env Cons
ITK-08	Release of radioactive material from in-tank fire or explosion due to intrusive activity (dome collapse)	Exothermic reaction of incompatible materials in tank	SC: SST Ventilation SC: DCRT Level Dip Tube Flow SC: 244-AR TK-002 Level (Ventilation)	LCO: SST Ventilation Syss LCO: DCRT Ventilation Syss AC: Ign Cntrls AC: Flammable Gas Mon Cntrls LCO: 204-AR TK-002 Ventilation Sys	None required	None required	Controls based on BIO Appendix E. Auto-Ign temperature of H2 at LFL is 400 C.	E2
ITK-08-I	Release of radioactive or toxic material from facility due to in-facility fire or explosion during intrusive activity	Exothermic reaction of incompatible materials in facility	None required	AC: Ign Cntrls AC: Flammable Gas Mon Cntrls	None required	None required	Controls based on BIO Appendix E. Auto-Ign temperature of H2 at LFL is 400 C.	E2
ITK-09	Release of radioactive material from in-tank fire or explosion due to intrusive activity (dome collapse)	Failure to bond components or incorrect bonding	SC: SST Ventilation SC: DCRT Level Dip Tube Flow SC: 244-AR TK-002 Level (Ventilation)	LCO: SST Ventilation Syss LCO: DCRT Ventilation Syss LCO: 244-AR TK-002 Ventil Sys AC: Ign Cntrls AC: Flammable Gas Mon Cntrls	None required	None required	Controls based on BIO Appendix E.	E2
ITK-09-I	Release of radioactive or toxic material from facility due to in-facility fire or explosion during intrusive activity	Failure to bond components or incorrect bonding	None required	AC: Ign Cntrls AC: Flammable Gas Mon Cntrls	None required	None required	Controls based on BIO Appendix E.	E2
ITK-10-I	Release of radioactive or toxic material from facility due to in-facility fire or explosion during intrusive activity	Spark from equipment or tools provide an ignition source	None required	AC: Ign Cntrls AC: Flammable Gas Mon Cntrls	None required	None required	Controls based on BIO Appendix E.	E2
ITK-10-a	Release of radioactive material from in-tank fire or explosion due to intrusive activity (dome collapse)	Spark from equipment or tools	SC: SST Ventilation SC: DCRT Level Dip Tube Flow SC: 244-AR TK-002 Level (Ventilation)	LCO: SST Ventilation Syss LCO: DCRT Ventilation Syss LCO: 244-AR TK-002 Ventil Sys AC: Ign Cntrls AC: Flammable Gas Mon Cntrls	None required	None required	Controls based on BIO Appendix E.	E2

Table 5.4-3. Safety Structures, Systems, and Components and Technical Safety Requirements for Potentially Severe (E3 and E2) Environmental Consequences. (107 Sheets)

ID	Hazardous Condition	Cause	Preventive SSCs	Preventive TSRs	Mitigative SSCs	Mitigative TSRs	Memo	Env Cons
ITK-10-b	Release of radioactive material from in-tank fire or explosion due to intrusive activity (dome collapse)	Spark from equipment or tools	SC: SY-101 Mixer Pump Cntrls SC: Primary Tank Leak Detect Syss SC: DST/AWF Ventilation	LCO: DST and AWF Tank Ventilation Syss LCO: Primary Tank Leak Detect Syss AC: Flammability Cntrls AC: Ign Cntrls AC: Flammable Gas Mon Cntrls	None required	None required	Controls based on BIO Appendix E; LA-UR-92-3196.	E2
ITK-11	Release of radioactive material from in-tank fire or explosion due to intrusive activity (dome collapse)	Lightning, range fire, or seismic event ignites tank vapors	SC: SY-101 Mixer Pump Cntrls SC: Primary Tank Leak Detect Syss SC: DST/AWF Ventilation	LCO: DST and AWF Tank Ventilation Syss LCO: Primary Tank Leak Detect Syss AC: Flammability Cntrls AC: Ign Cntrls AC: Flammable Gas Mon Cntrls AC: Ign Cntrls (Lightning)	None required	AC: Emergency Prep (Seismic)	Controls based on BIO Appendix E; LA-UR-92-3196; and accident analyses (Natural Phenomena - Lightning; and Natural Phenomena - Seismic).	E2
ITK-11-I	Release of radioactive or toxic material from facility due to in-facility fire or explosion during intrusive activity	Lightning, range fire, or seismic event ignites facility vapors	None required	AC: Ign Cntrls (Lightning)	None required	AC: Emergency Prep (Seismic)	Controls based on accident analyses (Natural Phenomena - Lightning; and Natural Phenomena - Seismic).	E2
ITK-FR-03	Release of radioactive aerosols from tank and/or receiver due to equipment jam in riser	Equipment becomes lodged in riser, efforts to remove pull riser out of tank causing breach of tank & receiver containment	None required	None required	None required	None required	No controls required based on accident analysis (Above Ground Structure Failure).	E2
ITK-FR-08	Release of radioactive aerosols/vapors from flex receiver due to structural failure	High winds tear flex receiver bag	None required	None required	None required	None required	No controls required based on accident analysis (Above Ground Structure Failure).	E2

Table 5.4-3. Safety Structures, Systems, and Components and Technical Safety Requirements for Potentially Severe (E3 and E2) Environmental Consequences. (107 Sheets)

ID	Hazardous Condition	Cause	Preventive SSCs	Preventive TSRs	Mitigative SSCs	Mitigative TSRs	Memo	Env Cons
ITK-FR-13	Release of radioactive aerosols/vapors from flex receiver due to buildup and ignition of flammable gas in receiver	Hydrogen gas buildup in tank/ riser that travels into receiver with ignition source (spark from herculite or equipment)	None required	AC: Ign Cntrls AC: Flammable Gas Mon Cntrls	None required	None required	Controls based on BIO Appendix E.	E2
ITK-FR-22	Release of radioactive aerosols from flex receiver due to tank gas release	Tank gas release pressurizes bag and causes bag to rupture	None required	None required	None required	None required	No controls required based on accident analysis (Above Ground Structure Failure).	E2
NP-03	Radioactive and hazardous material releases from tanks due to fire in tanks	Lightning strikes riser in tank farm	None required	AC: Ign Cntrls (Lightning)	None required	None required	Controls based on accident analysis (Natural Phenomena - Lightning).	E2
NP-05	Radioactive and hazardous material release from tanks, nearby ground surfaces, and ventilation systems due to above grade disturbances	High winds	None required	None required	None required	None required	No controls required based on accident analysis (Above Ground Structure Failure).	E2
NP-08	Radioactive and hazardous material releases from transfer pipes due to seismic event (possible spray leak)	Seismic event shears pipes and encasements during transfer	None required	None required	None required	AC: Emergency Prep (Seismic)	Controls based on accident analysis (Natural Phenomena - Seismic).	E2
OGT-EXT3-018	Release of radioactive or hazardous material from the primary pipe due to leak caused by truck crash into piping system	Human error, line struck by truck	SC: OGT Concrete Shielding Sys	AC: Trans Cntrls (OGT Protection) AC: Ign Cntrls (Speed Limit)	None required	LCO: Trans Leak Detect Syss AC: Trans Cntrls (Leak Detect/Cntrl) AC: Encasement Seal Loops AC: Emergency Prep (Significant Release)	Controls based on accident analyses (In-Tank Fuel Fire/ Deflagration; and Surface Leak Resulting in Pool).	E2

Table 5.4-3. Safety Structures, Systems, and Components and Technical Safety Requirements for Potentially Severe (E3 and E2) Environmental Consequences. (107 Sheets)

ID	Hazardous Condition	Cause	Preventive SSCs	Preventive TSRs	Mitigative SSCs	Mitigative TSRs	Memo	Env Cons
OGT-FLOW1-02	Release of radioactive or hazardous material from pit overflow due to primary pipe leak caused by over-rated pump	Incorrect pump installed creates excessive flow and pressure on OGT system eroding EPDM pipe causing leak to secondary pipe with drain in pit plugged	SC: OGT Encasement and Connections SC: Trans Leak Detect Syss SS: Tank Level Detect Syss SS: Salt Well Flow Totalizer	LCO: Trans Leak Detect Syss AC: Trans Cntrls (Leak Prevention/ Detect/Cntrl) AC: Encasement Seal Loops	SC: Trans Leak Detect Syss SS: Tank Level Detect Syss SS: Salt Well Flow Totalizer SC: Trans Sys Cvrs SC: Trans Sys Supplemental Cvrs	LCO: Trans Sys Cvrs LCO: Trans Leak Detect Syss AC: Trans Cntrls (Leak Detect/Cntrl) AC: Encasement Seal Loops AC: Emergency Prep (Significant Release) AC: Trans Sys Cvr Removal Cntrls JCO: Supplemental Cvrs	Controls based on accident analysis (Surface Leak Resulting in Pool).	E2
OGT-FLOW1-03B	Release of radioactive or hazardous material from the primary pipe due to misdirected flow of waste through flush line	JR-1 (3-way valve) mispositioned to flush, two check valves fail, flush disconnect fails (check valve), and reverse flow to water truck, drum or onto ground	SC: Pressure Switch Interlocks or Alarms (Water Service Lines)	LCO: Service Water Pressure Detect Syss AC: Trans Cntrls (Mis-routing) AC: Trans Pump Admin Lock Cntrls	None required	None required	Controls based on accident analysis (Surface Leak Resulting in Pool).	E2
OGT-FLOW1-04	Release of radioactive or hazardous material from the primary pipe due to valve failure resulting in misdirected flow of waste through flush line to flush water supply truck	JR-1 leak (bleed-by), two check valves fail, and flush disconnect fails and pump started causing reverse flow to flush water truck tank	SC: Pressure Switch Interlocks or Alarms (Water Service Lines)	LCO: Service Water Pressure Detect Syss AC: Trans Pump Admin Lock Cntrls	None required	None required	Controls based on accident analysis (Surface Leak Resulting in Pool).	E2

Table 5.4-3. Safety Structures, Systems, and Components and Technical Safety Requirements for Potentially Severe (E3 and E2) Environmental Consequences. (107 Sheets)

ID	Hazardous Condition	Cause	Preventive SSCs	Preventive TSRs	Mitigative SSCs	Mitigative TSRs	Memo	Env Cons
OGT-FLOW1-06	Release of radioactive or hazardous material from the DCRT due to overflow	Exceed volume available in DCRT/ insufficient volume available, condition goes unnoticed until overflow occurs	SC: Trans Leak Detect Syss SS: Tank Level Detect Syss SS: Salt Well Flow Totalizer	LCO: Trans Leak Detect Syss AC: Trans Cntrls (Leak Prevention/ Detect/Cntrl)	SC: Trans Leak Detect Syss SS: Tank Level Detect Syss SS: Salt Well Flow Totalizer SC: Trans Sys Cvrs SC: Trans Sys Supplemental Cvrs	LCO: Trans Sys Cvrs LCO: Trans Leak Detect Syss AC: Trans Cntrls (Leak Detect/Cntrl) AC: Emergency Prep (Significant Release) AC: Trans Pump Admin Lock Cntrls AC: Trans Sys Cvr Removal Cntrls JCO: Supplemental Cvrs	Controls based on accident analysis (Surface Leak Resulting in Pool).	E2
OGT-FLOW2-01A	Release of radioactive or hazardous material from the primary pipe due to leak caused by incorrect pump installed	Incorrect pump installed creates excessive flow and isolation valve closed on secondary pipe, erosion of EPDM and pressurization of secondary pipe causing leaks from flanges gasket within concrete shield	SC: OGT Encasement and Connections SC: Trans Leak Detect Syss SS: Tank Level Detect Syss SS: Salt Well Flow Totalizer	AC: Trans Leak Detect Syss AC: Trans Cntrls (Leak Prevention/ Detect/Cntrl) AC: Encasement Seal Loops	SC: Trans Leak Detect Syss SS: Tank Level Detect Syss SS: Salt Well Flow Totalizer	AC: Trans Leak Detect Syss AC: Trans Cntrls (Leak Detect/Cntrl) AC: Encasement Seal Loops AC: Emergency Prep (Significant Release)	These are applicable controls from the Subsurface Leak Resulting in Pool accident analysis.	E2

Table 5.4-3. Safety Structures, Systems, and Components and Technical Safety Requirements for Potentially Severe (E3 and E2) Environmental Consequences. (107 Sheets)

ID	Hazardous Condition	Cause	Preventive SSCs	Preventive TSRs	Mitigative SSCs	Mitigative TSRs	Memo	Env Cons
OGT-FLOW2-01B	Release of radioactive or hazardous material from the primary pipe due to leak caused by incorrect pump installed	Incorrect pump installed creates excessive flow and isolation valve closed on secondary pipe, erosion of EPDM and pressurization of secondary pipe causing leaks from flanges gasket within concrete shield	SC: OGT Encasement and Connections SC: Trans Leak Detect Syss SS: Tank Level Detect Syss SS: Salt Well Flow Totalizer	LCO: Trans Leak Detect Syss AC: Trans Cntrls (Leak Prevention/ Detect/Cntrl) AC: Encasement Seal Loops	SC: Trans Leak Detect Syss SS: Tank Level Detect Syss SS: Salt Well Flow Totalizer SC: Trans Sys Cvrs SC: Trans Sys Supplemental Cvrs	LCO: Trans Sys Cvrs LCO: Trans Leak Detect Syss AC: Trans Cntrls (Leak Detect/Cntrl) AC: Encasement Seal Loops AC: Emergency Prep (Significant Release) AC: Trans Sys Cvr Removal Cntrls JCO: Supplemental Cvrs	Controls based on accident analysis (Surface Leak Resulting in Pool).	E2
OGT-FLOW2-02	Release of radioactive or hazardous aerosols from the primary pipe due spray leak caused by over-rated pump	Installation of incorrect pump and failure of inner pipe, failure of weld on flange of outer pipe, isolation valves closed on secondary pipe drains and no concrete shield in place	SC: OGT Concrete Shielding Sys	AC: Encasement Seal Loops AC: Trans Cntrls (OGT protection) AC: Trans Pump Admin Lock Cntrls	SC: Trans Sys Cvrs SC: OGT Encasement and Connections	LCO: Trans Sys Cvrs AC: Trans Sys Cvr Removal Cntrls	Controls based on accident analysis (Spray Leak in Structure or from Overground Waste Transfer Lines).	E2
OGT-FLOW2-03A	Release of radioactive or hazardous material from the primary pipe due to leak caused by incorrect pump installed	Installation of incorrect pump, failure of inner pipe and isolation valves closed on secondary pipe drains causing leak from failed welds on flange within the concrete shield	SC: OGT Encasement and Connections SC: Trans Leak Detect Syss SS: Tank Level Detect Syss SS: Salt Well Flow Totalizer	AC: Trans Leak Detect Syss AC: Trans Cntrls (Leak Prevention/ Detect/Cntrl) AC: Encasement Seal Loops	SC: Trans Leak Detect Syss SS: Tank Level Detect Syss SS: Salt Well Flow Totalizer	AC: Trans Leak Detect Syss AC: Trans Cntrls (Leak Detect/Cntrl) AC: Encasement Seal Loops AC: Emergency Prep (Significant Release)	These are applicable controls from the Subsurface Leak Resulting in Pool accident analysis.	E2

Table 5.4-3. Safety Structures, Systems, and Components and Technical Safety Requirements for Potentially Severe (E3 and E2) Environmental Consequences. (107 Sheets)

ID	Hazardous Condition	Cause	Preventive SSCs	Preventive TSRs	Mitigative SSCs	Mitigative TSRs	Memo	Env Cons
OGT-FLOW2-038	Release of radioactive or hazardous material from the primary pipe due leak caused by incorrect pump installed	Installation of incorrect pump, failure of inner pipe and isolation valves closed on secondary pipe drains causing leak from failed welds on flange within the concrete shield	SC: OGT Encasement and Connections SC: Trans Leak Detect Syss SS: Tank Level Detect Syss SS: Salt Well Flow Totalizer	LCO: Trans Leak Detect Syss AC: Trans Cntrls (Leak Prevention/ Detect/Cntrl) AC: Encasement Seal Loops	SC: Trans Leak Detect Syss SS: Tank Level Detect Syss SS: Salt Well Flow Totalizer SC: Trans Sys Cvrs SC: Trans Sys Supplemental Cvrs	LCO: Trans Sys Cvrs LCO: Trans Leak Detect Syss AC: Trans Cntrls (Leak Detect/Cntrl) AC: Encasement Seal Loops AC: Emergency Prep (Significant Release) AC: Trans Sys Cvr Removal Cntrls JCO: Supplemental Cvrs	Controls based on accident analysis (Surface Leak Resulting in Pool).	E2
OGT-NP3-01	Release of radioactive or hazardous aerosols from the primary pipe due spray leak caused by seismic event	Failure of line and concrete shielding during seismic event	None required	None required	SC: OGT Encasement and Connections	AC: Emergency Prep (Seismic)	Controls based on accident analysis (Natural Phenomena - Seismic) and seismic qualification of OGT Encasement and Connections.	E2
OGT-NP3-02	Release of radioactive or hazardous aerosols from the primary pipe due to leak caused by high wind	Pipe is blown off supports and no concrete shielding in place	None required	None required	SC: OGT Encasement and Connections	None required	Controls based on qualification of OGT Encasement and Connections for high winds.	E2

Table 5.4-3. Safety Structures, Systems, and Components and Technical Safety Requirements for Potentially Severe (E3 and E2) Environmental Consequences. (107 Sheets)

ID	Hazardous Condition	Cause	Preventive SSCs	Preventive TSRs	Mitigative SSCs	Mitigative TSRs	Memo	Env Cons
OGT-PRES1-01	Release of radioactive or hazardous material from overflow of pit due to leak caused by high pressure	Heat up of hydro test by heat tape or high ambient temperature, high pressure results from captive fluid heat up, inner pipe damaged, leaks to secondary pipe and drains back to pits and insufficient drainage in pit	SC: OGT Encasement and Connections SC: Trans Leak Detect Syss SS: Tank Level Detect Syss SS: Salt Well Flow Totalizer	LCO: Trans Leak Detect Syss AC: Trans Cntrls (Leak Prevention/ Detect/Cntrl) AC: Encasement Seal Loops	SC: Trans Leak Detect Syss SS: Tank Level Detect Syss SS: Salt Well Flow Totalizer SC: Trans Sys Cvrs SC: Trans Sys Supplemental Cvrs	LCO: Trans Sys Cvrs LCO: Trans Leak Detect Syss AC: Trans Cntrls (Leak Detect/Cntrl) AC: Encasement Seal Loops AC: Emergency Prep (Significant Release) AC: Trans Sys Cvr Removal Cntrls JCO: Supplemental Cvrs	Controls based on accident analysis (Surface Leak Resulting in Pool).	E2
OGT-REAC1-01	Release of radioactive or hazardous material from overflow of pit due to primary pipe leak cause by chemical reaction	Pumping from multiple tanks to single OGT, potential for adverse chemical reactions in pipeline damaging inner pipe, leaks to secondary pipe and drains back to pits and insufficient drainage in pit	SC: OGT Encasement and Connections SC: Trans Leak Detect Syss SS: Tank Level Detect Syss SS: Salt Well Flow Totalizer	LCO: Trans Leak Detect Syss AC: Trans Cntrls (Leak Prevention/ Detect/Cntrl) AC: Encasement Seal Loops	SC: Trans Leak Detect Syss SS: Tank Level Detect Syss SS: Salt Well Flow Totalizer SC: Trans Sys Cvrs SC: Trans Sys Supplemental Cvrs	LCO: Trans Sys Cvrs LCO: Trans Leak Detect Syss AC: Trans Cntrls (Leak Detect/Cntrl) AC: Encasement Seal Loops AC: Emergency Prep (Significant Release) AC: Trans Sys Cvr Removal Cntrls JCO: Supplemental Cvrs	Controls based on accident analysis (Surface Leak Resulting in Pool).	E2

Table 5.4-3. Safety Structures, Systems, and Components and Technical Safety Requirements for Potentially Severe (E3 and E2) Environmental Consequences. (107 Sheets)

ID	Hazardous Condition	Cause	Preventive SSCs	Preventive TSRs	Mitigative SSCs	Mitigative TSRs	Memo	Env Cons
OGT-TEMP1-02	Release of radioactive or hazardous vapors/ aerosols from the primary pipe due to spray leak caused by high temperatures	Vehicle accident above ground starts fire, melt the EPDM hose causing a leak to secondary pipe, pumping occurring, fire fails gasket and facilitates a release to atmosphere	SC: OGT Concrete Shielding Sys	AC: Trans Cntrls (OGT protection) AC: Ign Cntrls (Speed Limit)	None required	None required	Controls based on accident analyses (Spray Leak in Structure or from Overground Waste Transfer Lines; and In-Tank Fuel Fire/ Deflagration).	E2
OGT-TEMP1-03	Release of radioactive or hazardous material from overflow of pit due to leak caused by high temperature	High temperature flush water fails inner pipe causing leak to secondary pipe, drain to pit with insufficient drainage in pit	SC: OGT Encasement and Connections SC: Trans Leak Detect Syss SS: Tank Level Detect Syss SS: Salt Well Flow Totalizer	LCO: Trans Leak Detect Syss AC: Trans Cntrls (Leak Prevention/ Detect/Cntrl) AC: Encasement Seal Loops	SC: Trans Leak Detect Syss SS: Tank Level Detect Syss SS: Salt Well Flow Totalizer SC: Trans Sys Cvrs SC: Trans Sys Supplemental Cvrs	LCO: Trans Sys Cvrs LCO: Trans Leak Detect Syss AC: Trans Cntrls (Leak Detect/Cntrl) AC: Encasement Seal Loops AC: Emergency Prep (Significant Release) AC: Trans Sys Cvr Removal Cntrls JCO: Supplemental Cvrs	Controls based on accident analysis (Surface Leak Resulting in Pool).	E2
RSR-05-IB	Facility confinement breach from dropped equipment (tools, mirrors) into facility	Failure to attach lanyard or other position limiting device Failure of lanyard or device	None	AC: Dome Loading Cntrls (Lifting Cntrls)	None	None	These are applicable controls from the Tank Failure Due to Excessive Loads accident analysis.	E2
RSR-06-I	Release of radioactive or toxic material from facility due to in-facility fire or explosion during riser removal activity	Failure to bond components or incorrect bonding allows electrostatic spark	None required	AC: Ign Cntrls AC: Flammable Gas Mon Cntrls	None required	None required	Controls based on BIO Appendix E.	E2

Table 5.4-3. Safety Structures, Systems, and Components and Technical Safety Requirements for Potentially Severe (E3 and E2) Environmental Consequences. (107 Sheets)

ID	Hazardous Condition	Cause	Preventive SSCs	Preventive TSRs	Mitigative SSCs	Mitigative TSRs	Memo	Env Cons
RSR-07-I	Release of radioactive or toxic material from facility due to in-facility fire or explosion during riser removal activity (chosen to represent all organic nitrate tanks)	Spark from failure to use non-sparking tools or sparks from welding, cutting, grinding, etc.	SS: Temperature Mon Sys	LCO: SST Waste Temperature Cntrls LCD: DST and AWF Tank Waste Temperature Cntrls AC: Ign Cntrls (Organic Salt-Nitrate) AC: Moisture Cntrls AC: Process Instrumentation and Measuring and Test Equipment	None required	AC: HEPA Filter Cntrl Program (Source Term) AC: Emergency Prep Program (Organic Salt-Nitrate)	Controls based on accident analysis (Organic Salt-Nitrate Reaction).	E2
TFS-1	Release of radioactive or hazardous waste liquid from overflow of 244-S vault to the 244-S pump pit due to syphon effect on Tank 241-SY-102 (pump does not overflow)	Human Error - failure to close isolation valve (or valve malfunction) following waste transfer which allows flow to continue (syphon) when pump is stopped	SC: Trans Leak Detect Syss SS: Tank Level Detect Syss	LCO: Trans Leak Detect Syss AC: Trans Cntrls (Leak Prevention/ Detect/Cntrl)	SC: Trans Leak Detect Syss SS: Tank Level Detect Syss SC: Trans Sys Cvrs SC: Trans Sys Supplemental Cvrs	LCO: Trans Sys Cvrs LCO: Trans Leak Detect Syss AC: Trans Cntrls (Leak Detect/Cntrl) AC: Emergency Prep (Significant Release) AC: Trans Pump Admin Lock Cntrls AC: Trans Sys Cvr Removal Cntrls JCO: Supplemental Cvrs	Controls based on accident analysis (Surface Leak Resulting in Pool).	E2
VEH-01	Release of radioactive or toxic materials from cask due to fire caused by vehicle operation	Vehicle catches on fire	None required	None required	None required	None required	None (All control activity deferred to packaging safety analyses).	E2
VEH-01-I	Release of radioactive or toxic materials from vehicle carrying MISF samples or contaminated equipment due to vehicle fire	Vehicle catches on fire	None required	None required	None required	None required	None (All control activity deferred to packaging safety analyses).	E2

Table 5.4-3. Safety Structures, Systems, and Components and Technical Safety Requirements for Potentially Severe (E3 and E2) Environmental Consequences. (107 Sheets)

ID	Hazardous Condition	Cause	Preventive SSCs	Preventive TSRs	Mitigative SSCs	Mitigative TSRs	Memo	Env Cons
VEH-03	Release of radioactive or toxic material from cask due to damage to transport casks during a high wind/tornado	High wind/tornado	None required	None required	None required	None required	None (All control activity deferred to packaging safety analyses).	E2
VEH-03-I	Release of radioactive or toxic material from MISF samples in transport casks due to high wind/tornado damage	High wind/tornado	None required	None required	None required	None required	None (All control activity deferred to packaging safety analyses).	E2
W058-FLOW01	Release of radioactive slurry to the soil surface from overflow in the SY-A or SY-B valve pit due to piping system leak (pool)	Computer failure or human error causing misrouting of material when flow path is not completely connected plus mitigative features failure	SC: Trans Leak Detect Syss SS: Tank Level Detect Syss SS: Salt Well Flow Totalizer	LCO: Trans Leak Detect Syss AC: Trans Cntrls (Leak Prevention/ Detect/Cntrl)	SC: Trans Leak Detect Syss SS: Tank Level Detect Syss SS: Salt Well Flow Totalizer SC: Trans Sys Cvrs SC: Trans Sys Supplemental Cvrs	LCO: Trans Sys Cvrs LCO: Trans Leak Detect Syss AC: Trans Cntrls (Leak Detect/Cntrl) AC: Emergency Prep (Significant Release) AC: Trans Pump Admin Lock Cntrls AC: Trans Sys Cvr Removal Cntrls JCO: Supplemental Cvrs	Controls based on accident analysis (Surface Leak Resulting in Pool).	E2

Table 5.4-3. Safety Structures, Systems, and Components and Technical Safety Requirements for Potentially Severe (E3 and E2) Environmental Consequences. (107 Sheets)

ID	Hazardous Condition	Cause	Preventive SSCs	Preventive TSRs	Mitigative SSCs	Mitigative TSRs	Memo	Env Cons
W058-FLOW03	Release of radioactive slurry to the soil surface from overflow in the SY-A or SY-B valve pit due to piping system leak (pool)	External leak of valve or valves to the valve pit plus mitigative features failure	SC: Trans Leak Detect Syss SS: Tank Level Detect Syss	LCO: Trans Leak Detect Syss AC: Trans Cntrls (Leak Prevention/ Detect/Cntrl)	SC: Trans Leak Detect Syss SS: Tank Level Detect Syss SC: Trans Sys Cvrs	LCO: Trans Sys Cvrs LCO: Trans Leak Detect Syss AC: Trans Cntrls (Leak Detect/Cntrl) AC: Emergency Prep (Significant Release) AC: Trans Pump Admin Lock Cntrls AC: Trans Sys Cvr Removal Cntrls	Controls based on accident analysis (Surface Leak Resulting in Pool).	E2
W058-FLOW05a	Release of radioactive slurry to the soil surface from overflow in the SY-A or SY-B valve pit due to piping system leak (pool)	Failure of jumper due to misalignment (human error) plus mitigative features failure	SC: Trans Leak Detect Syss SS: Tank Level Detect Syss	LCO: Trans Leak Detect Syss AC: Trans Cntrls (Leak Prevention/ Detect/Cntrl)	SC: Trans Leak Detect Syss SS: Tank Level Detect Syss SC: Trans Sys Cvrs	LCO: Trans Sys Cvrs LCO: Trans Leak Detect Syss AC: Trans Cntrls (Leak Detect/Cntrl) AC: Emergency Prep (Significant Release) AC: Trans Pump Admin Lock Cntrls AC: Trans Sys Cvr Removal Cntrls	Controls based on accident analysis (Surface Leak Resulting in Pool).	E2

Table 5.4-3. Safety Structures, Systems, and Components and Technical Safety Requirements for Potentially Severe (E3 and E2) Environmental Consequences. (107 Sheets)

ID	Hazardous Condition	Cause	Preventive SSCs	Preventive TSRs	Mitigative SSCs	Mitigative TSRs	Memo	Env Cons
W058-FLOW05b	Release of radioactive slurry to the soil surface from overflow in the SY-A or SY-B valve pit due to piping system leak (pool)	Failure of jumper due to gasket failure plus mitigative features failure	SC: Trans Leak Detect Syss SS: Tank Level Detect Syss	LCO: Trans Leak Detect Syss AC: Trans Cntrls (Leak Prevention/ Detect/Cntrl)	SC: Trans Leak Detect Syss SS: Tank Level Detect Syss SC: Trans Sys Cvrs	LCO: Trans Sys Cvrs LCO: Trans Leak Detect Syss AC: Trans Cntrls (Leak Detect/Cntrl) AC: Emergency Prep (Significant Release) AC: Trans Pump Admin Lock Cntrls AC: Trans Sys Cvr Removal Cntrls	Controls based on accident analysis (Surface Leak Resulting in Pool).	E2
W058-FLOW05c	Release of radioactive slurry to the soil surface from overflow in the SY-A or SY-B valve pit due to piping system leak (pool)	Failure of jumper due to corrosion plus mitigative features failure	SC: Trans Leak Detect Syss SS: Tank Level Detect Syss	LCO: Trans Leak Detect Syss AC: Trans Cntrls (Leak Prevention/ Detect/Cntrl)	SC: Trans Leak Detect Syss SS: Tank Level Detect Syss SC: Trans Sys Cvrs	LCO: Trans Sys Cvrs LCO: Trans Leak Detect Syss AC: Trans Cntrls (Leak Detect/Cntrl) AC: Emergency Prep (Significant Release) AC: Trans Pump Admin Lock Cntrls AC: Trans Sys Cvr Removal Cntrls	Controls based on accident analysis (Surface Leak Resulting in Pool).	E2

Table 5.4-3. Safety Structures, Systems, and Components and Technical Safety Requirements for Potentially Severe (E3 and E2) Environmental Consequences. (107 Sheets)

ID	Hazardous Condition	Cause	Preventive SSCs	Preventive TSRs	Mitigative SSCs	Mitigative TSRs	Memo	Env Cons
W058-FLOW07	Release of radioactive supernate to the soil surface from overflow in the SY-A or SY-B valve pit due to piping system leak (pool)	Computer failure or human error causing misrouting of material when flow path is not completely connected plus mitigative features failure	SC: Trans Leak Detect Syss SS: Tank Level Detect Syss SS: Salt Well Flow Totalizer	LCO: Trans Leak Detect Syss AC: Trans Cntrls (Leak Prevention/ Detect/Cntrl)	SC: Trans Leak Detect Syss SS: Tank Level Detect Syss SS: Salt Well Flow Totalizer SC: Trans Sys Cvrs	LCO: Trans Sys Cvrs LCO: Trans Leak Detect Syss AC: Trans Cntrls (Leak Detect/Cntrl) AC: Emergency Prep (Significant Release) AC: Trans Pump Admin Lock Cntrls AC: Trans Sys Cvr Removal Cntrls	Controls based on accident analysis (Surface Leak Resulting in Pool).	E2
W058-FLOW09	Release of radioactive supernate to the soil surface from overflow in the SY-A or SY-B valve pit due to piping system leak (pool)	External leak of valve or valves to the valve pit plus mitigative features failure	SC: Trans Leak Detect Syss SS: Tank Level Detect Syss	LCO: Trans Leak Detect Syss AC: Trans Cntrls (Leak Prevention/ Detect/Cntrl)	SC: Trans Leak Detect Syss SS: Tank Level Detect Syss SC: Trans Sys Cvrs	LCO: Trans Sys Cvrs LCO: Trans Leak Detect Syss AC: Trans Cntrls (Leak Detect/Cntrl) AC: Emergency Prep (Significant Release) AC: Trans Pump Admin Lock Cntrls AC: Trans Sys Cvr Removal Cntrls	Controls based on accident analysis (Surface Leak Resulting in Pool).	E2

Table 5.4-3. Safety Structures, Systems, and Components and Technical Safety Requirements for Potentially Severe (E3 and E2) Environmental Consequences. (107 Sheets)

ID	Hazardous Condition	Cause	Preventive SSCs	Preventive TSRs	Mitigative SSCs	Mitigative TSRs	Memo	Env Cons
W058-FLOW11a	Release of radioactive supernate to the soil surface from overflow in the SY-A or SY-B valve pit due to piping system leak (pool)	Failure of jumper due to misalignment (human error) plus mitigative features failure	SC: Trans Leak Detect Syss SS: Tank Level Detect Syss	LCO: Trans Leak Detect Syss AC: Trans Cntrls (Leak Prevention/ Detect/Cntrl)	SC: Trans Leak Detect Syss SS: Tank Level Detect Syss SC: Trans Sys Cvrs	LCO: Trans Sys Cvrs LCO: Trans Leak Detect Syss AC: Trans Cntrls (Leak Detect/Cntrl) AC: Emergency Prep (Significant Release) AC: Trans Pump Admin Lock Cntrls AC: Trans Sys Cvr Removal Cntrls	Controls based on accident analysis (Surface Leak Resulting in Pool).	E2
W058-FLOW11b	Release of radioactive supernate to the soil surface from overflow in the SY-A or SY-B valve pit due to piping system leak (pool)	Failure of jumper due to gasket failure plus mitigative features failure	SC: Trans Leak Detect Syss SS: Tank Level Detect Syss	LCO: Trans Leak Detect Syss AC: Trans Cntrls (Leak Prevention/ Detect/Cntrl)	SC: Trans Leak Detect Syss SS: Tank Level Detect Syss SC: Trans Sys Cvrs	LCO: Trans Sys Cvrs LCO: Trans Leak Detect Syss AC: Trans Cntrls (Leak Detect/Cntrl) AC: Emergency Prep (Significant Release) AC: Trans Pump Admin Lock Cntrls AC: Trans Sys Cvr Removal Cntrls	Controls based on accident analysis (Surface Leak Resulting in Pool).	E2

Table 5.4-3. Safety Structures, Systems, and Components and Technical Safety Requirements for Potentially Severe (E3 and E2) Environmental Consequences. (107 Sheets)

ID	Hazardous Condition	Cause	Preventive SSCs	Preventive TSRs	Mitigative SSCs	Mitigative TSRs	Memo	Env Cons
W058-FLOW11c	Release of radioactive supernate to the soil surface from overflow in the SY-A or SY-B valve pit due to piping system leak (pool)	Failure of jumper due to corrosion plus mitigative features failure	SC: Trans Leak Detect Syss SS: Tank Level Detect Syss	LCO: Trans Leak Detect Syss AC: Trans Cntrls (Leak Prevention/ Detect/Cntrl)	SC: Trans Leak Detect Syss SS: Tank Level Detect Syss SC: Trans Sys Cvrs	LCO: Trans Sys Cvrs LCO: Trans Leak Detect Syss AC: Trans Cntrls (Leak Detect/Cntrl) AC: Emergency Prep (Significant Release) AC: Trans Pump Admin Lock Cntrls AC: Trans Sys Cvr Removal Cntrls	Controls based on accident analysis (Surface Leak Resulting in Pool).	E2
W058-FLOW13	Release of radioactive supernate to the soil surface from overflow in the SY-A or SY-B valve pit due to piping system leak (pool)	Open path for pool leak from test riser	SC: Trans Leak Detect Syss SS: Tank Level Detect Syss	LCO: Trans Leak Detect Syss AC: Trans Cntrls (Leak Prevention/ Detect/Cntrl) AC: Encasement Seal Loops	SC: Trans Leak Detect Syss SS: Tank Level Detect Syss SC: Trans Sys Cvrs	LCO: Trans Sys Cvrs LCO: Trans Leak Detect Syss AC: Trans Cntrls (Leak Detect/Cntrl) AC: Encasement Seal Loops AC: Emergency Prep (Significant Release) AC: Trans Pump Admin Lock Cntrls AC: Trans Sys Cvr Removal Cntrl	Controls based on accident analysis (Surface Leak Resulting in Pool).	E2
W058-INTEG01a	Release of radioactive slurry to the soil surface from the underground piping between the SY-A or SY-B valve pit and a diversion box due to piping system leak	Failure of primary and encasement piping due to corrosion plus mitigative features failure	SC: Pipe Encasements	AC: Encasement Seal Loops	SS: Tank Level Detect Syss SS: Salt Well Flow Totalizer	AC: Trans Cntrls (Leak Detect/Cntrl) AC: Emergency Prep (Significant Release)	Controls based on accident analysis (Subsurface Leak Resulting in Pool).	E2

Table 5.4-3. Safety Structures, Systems, and Components and Technical Safety Requirements for Potentially Severe (E3 and E2) Environmental Consequences. (107 Sheets)

ID	Hazardous Condition	Cause	Preventive SSCs	Preventive TSRs	Mitigative SSCs	Mitigative TSRs	Memo	Env Cons
W058-INTEG01b	Release of radioactive slurry to the soil surface from the underground piping between the SY-A or SY-B valve pit and a diversion box due to piping system leak	Failure of primary and encasement piping due to unrecognized material flaw plus mitigative features failure	SC: Pipe Encasements	AC: Encasement Seal Loops	SS: Tank Level Detect Syss SS: Salt Well Flow Totalizer	AC: Trans Cntrls (Leak Detect/Cntrl) AC: Emergency Prep (Significant Release)	Controls based on accident analysis (Subsurface Leak Resulting in Pool).	E2
W058-INTEG01c	Release of radioactive slurry to the soil surface from overflow of a diversion box due to piping system leak	Failure of primary and encasement piping due to corrosion plus mitigative features failure	SC: Trans Leak Detect Syss SS: Tank Level Detect Syss	LCO: Trans Leak Detect Syss AC: Trans Cntrls (Leak Prevention/ Detect/Cntrl)	SC: Trans Leak Detect Syss SS: Tank Level Detect Syss SC: Trans Sys Cvrs	LCO: Trans Sys Cvrs LCO: Trans Leak Detect Syss AC: Trans Cntrls (Leak Detect/Cntrl) AC: Emergency Prep (Significant Release) AC: Trans Pump Admin Lock Cntrls AC: Trans Sys Cvr Removal Cntrls	Controls based on accident analysis (Surface Leak Resulting in Pool).	E2
W058-INTEG01d	Release of radioactive slurry to the soil surface from overflow of a diversion box due to piping system leak	Failure of primary and encasement piping due to unrecognized material flaw plus mitigative features failure	SC: Trans Leak Detect Syss SS: Tank Level Detect Syss	LCO: Trans Leak Detect Syss AC: Trans Cntrls (Leak Prevention/ Detect/Cntrl)	SC: Trans Leak Detect Syss SS: Tank Level Detect Syss SC: Trans Sys Cvrs	LCO: Trans Sys Cvrs LCO: Trans Leak Detect Syss AC: Trans Cntrls (Leak Detect/Cntrl) AC: Emergency Prep (Significant Release) AC: Trans Pump Admin Lock Cntrls AC: Trans Sys Cvr Removal Cntrls	Controls based on accident analysis (Surface Leak Resulting in Pool).	E2

Table 5.4-3. Safety Structures, Systems, and Components and Technical Safety Requirements for Potentially Severe (E3 and E2) Environmental Consequences. (107 Sheets)

ID	Hazardous Condition	Cause	Preventive SSCs	Preventive TSRs	Mitigative SSCs	Mitigative TSRs	Memo	Env Cons
W058-INTEG03a	Release of radioactive slurry to the soil surface from the underground piping between the SY-A or SY-B valve pit and a diversion box due to piping system leak	Failure of primary and encasement piping due to external event (airplane crash, volcanism, etc)	SC: Pipe Encasements	AC: Encasement Seal Loops	SS: Tank Level Detect Syss SS: Salt Well Flow Totalizer	AC: Trans Cntrls (Leak Detect/Cntrl) AC: Emergency Prep (Significant Release) AC: Emergency Prep (Seismic)	Controls based on accident analyses (Subsurface Leak Resulting in Pool; and Natural Phenomena - Seismic).	E2
W058-INTEG03b	Release of radioactive slurry to the soil surface from overflow of a diversion box due to piping system leak	Failure of primary and encasement piping due to external event (airplane crash, volcanism, etc)	SC: Trans Leak Detect Syss SS: Tank Level Detect Syss	LCO: Trans Leak Detect Syss AC: Trans Cntrls (Leak Prevention/ Detect/Cntrl)	SC: Trans Leak Detect Syss SS: Tank Level Detect Syss SC: Trans Sys Cvrs Trans Sys Supplemental Cvrs	LCO: Trans Sys Cvrs LCO: Trans Leak Detect Syss AC: Trans Cntrls (Leak Detect/Cntrl) AC: Emergency Prep (Seismic) AC: Emergency Prep (Significant Release) AC: Trans Pump Admin Lock Cntrls AC: Trans Sys Cvr Removal Cntrls JCO: Supplemental Cvrs	Controls based on accident analyses (Surface Leak Resulting in Pool; and Natural Phenomena - Seismic).	E2
W058-INTEG05a	Release of radioactive slurry to the soil surface from the underground piping between the SY-A or SY-B valve pit and a diversion box due to piping system leak	Failure of primary and encasement piping due to external event (excavation accident) plus mitigative features failure	None required	AC: Excavation Cntrls	None required	None required	Controls based on accident analysis (Spray Leak From Underground Waste Transfer Lines) Excavation of a buried line leads to a surface leak.	E2
W058-INTEG05b	Release of radioactive slurry to the soil surface from overflow of a diversion box due to piping system leak	Failure of primary and encasement piping due to external event (excavation accident) plus mitigative features failure	None required	AC: Excavation Cntrls	None required	None required	Controls based on accident analysis (Spray Leak From Underground Waste Transfer Lines) Excavation of a buried line leads to a surface leak.	E2

Table 5.4-3. Safety Structures, Systems, and Components and Technical Safety Requirements for Potentially Severe (E3 and E2) Environmental Consequences. (107 Sheets)

ID	Hazardous Condition	Cause	Preventive SSCs	Preventive TSRs	Mitigative SSCs	Mitigative TSRs	Memo	Env Cons
W058-INTEG07a	Release of radioactive slurry to the soil surface from the underground piping between the SY-A or SY-B valve pit and a diversion box due to piping system leak	Failure of primary and encasement piping due to external event (undermining from broken fluid transfer lines in vicinity) plus mitigative features failure	SC: Pipe Encasements	AC: Encasement Seal Loops	SS: Tank Level Detect Syss SS: Salt Well Flow Totalizer	AC: Trans Cntrls (Leak Detect/Cntrl) AC: Emergency Prep (Significant Release)	Controls based on accident analysis (Subsurface Leak Resulting in Pool).	E2
W058-INTEG07b	Release of radioactive slurry to the soil surface from overflow of a diversion box due to piping system leak	Failure of primary and encasement piping due to external event (undermining from broken fluid transfer lines in vicinity) plus mitigative features failure	SC: Trans Leak Detect Syss SS: Tank Level Detect Syss	LCO: Trans Leak Detect Syss AC: Trans Cntrls (Leak Prevention/ Detect/Cntrl)	SC: Trans Leak Detect Syss SS: Tank Level Detect Syss SC: Trans Sys Cvrs SC: Trans Sys Supplemental Cvrs	LCO: Trans Sys Cvrs LCO: Trans Leak Detect Syss AC: Trans Cntrls (Leak Detect/Cntrl) AC: Emergency Prep (Significant Release) AC: Trans Pump Admin Lock Cntrls AC: Trans Sys Cvr Removal Cntrls JCO: Supplemental Cvrs	Controls based on accident analysis (Surface Leak Resulting in Pool).	E2
W058-INTEG09a	Release of radioactive slurry to the soil surface from the underground piping between the SY-A or SY-B valve pit and a diversion box due to piping system leak	Failure of primary and encasement piping due to freezing	SC: Pipe Encasements	AC: Encasement Seal Loops	SS: Tank Level Detect Syss SS: Salt Well Flow Totalizer	AC: Trans Cntrls (Leak Detect/Cntrl) AC: Emergency Prep (Significant Release)	Controls based on accident analysis (Subsurface Leak Resulting in Pool).	E2

Table 5.4-3. Safety Structures, Systems, and Components and Technical Safety Requirements for Potentially Severe (E3 and E2) Environmental Consequences. (107 Sheets)

ID	Hazardous Condition	Cause	Preventive SSCs	Preventive TSRs	Mitigative SSCs	Mitigative TSRs	Memo	Env Cons
W058-INTEG09b	Release of radioactive slurry to the soil surface from overflow of a diversion box due to piping system leak	Failure of primary and encasement piping due to freezing	SC: Trans Leak Detect Syss SS: Tank Level Detect Syss	LCO: Trans Leak Detect Syss AC: Trans Cntrls (Leak Prevention/ Detect/Cntrl)	SC: Trans Leak Detect Syss SS: Tank Level Detect Syss SC: Trans Sys Cvrs SC: Trans Sys Supplemental Cvrs	LCO: Trans Sys Cvrs LCO: Trans Leak Detect Syss AC: Trans Cntrls (Leak Detect/Cntrl) AC: Emergency Prep (Significant Release) AC: Trans Pump Admin Lock Cntrls AC: Trans Sys Cvr Removal Cntrls JCO: Supplemental Cvrs	Controls based on accident analysis (Surface Leak Resulting in Pool).	E2
W058-INTEG11a	Release of radioactive slurry to the soil surface from the underground piping between the SY-A or SY-B valve pit and a diversion box due to piping system leak	Failure of primary and encasement piping due to seismic event plus mitigative features failure	SC: Pipe Encasements	AC: Encasement Seal Loops	SS: Tank Level Detect Syss SS: Salt Well Flow Totalizer	AC: Trans Cntrls (Leak Detect/Cntrl) AC: Emergency Prep (Significant Release) AC: Emergency Prep (Seismic)	Controls based on accident analyses (Subsurface Leak Resulting in Pool; and Natural Phenomena - Seismic).	E2

Table 5.4-3. Safety Structures, Systems, and Components and Technical Safety Requirements for Potentially Severe (E3 and E2) Environmental Consequences. (107 Sheets)

ID	Hazardous Condition	Cause	Preventive SSCs	Preventive TSRs	Mitigative SSCs	Mitigative TSRs	Memo	Env Cons
W058-INTEG11b	Release of radioactive slurry to the soil surface from overflow of a diversion box due to piping system leak	Failure of primary and encasement piping due to seismic event plus mitigative features failure	SC: Trans Leak Detect Syss SS: Tank Level Detect Syss	LCO: Trans Leak Detect Syss AC: Trans Cntrls (Leak Prevention/ Detect/Cntrl)	SC: Trans Leak Detect Syss SS: Tank Level Detect Syss SC: Trans Sys Cvrs SC: Trans Sys Supplemental Cvrs	LCO: Trans Sys Cvrs LCO: Trans Leak Detect Syss AC: Trans Cntrls (Leak Detect/Cntrl) AC: Emergency Prep (Seismic) AC: Emergency Prep (Significant Release) AC: Trans Pump Admin Lock Cntrls AC: Trans Sys Cvr Removal Cntrls JCO: Supplemental Cvrs	Controls based on accident analyses (Surface Leak Resulting in Pool; and Natural Phenomena - Seismic).	E2
W058-INTEG13a	Release of radioactive supernate to the soil surface from the underground piping between the SY-A or SY-B valve pit and a diversion box due to piping system leak	Failure of primary and encasement piping due to corrosion plus mitigative features failure	SC: Pipe Encasements	AC: Encasement Seal Loops	SS: Tank Level Detect Syss SS: Salt Well Flow Totalizer	AC: Trans Cntrls (Leak Detect/Cntrl) AC: Emergency Prep (Significant Release)	Controls based on accident analysis (Subsurface Leak Resulting in Pool).	E2
W058-INTEG13b	Release of radioactive supernate to the soil surface from the underground piping between the SY-A or SY-B valve pit and a diversion box due to piping system leak	Failure of primary and encasement piping due to unrecognized material flaw plus mitigative features failure	SC: Pipe Encasements	AC: Encasement Seal Loops	SS: Tank Level Detect Syss SS: Salt Well Flow Totalizer	AC: Trans Cntrls (Leak Detect/Cntrl) AC: Emergency Prep (Significant Release)	Controls based on accident analysis (Subsurface Leak Resulting in Pool).	E2

Table 5.4-3. Safety Structures, Systems, and Components and Technical Safety Requirements for Potentially Severe (E3 and E2) Environmental Consequences. (107 Sheets)

ID	Hazardous Condition	Cause	Preventive SSCs	Preventive TSRs	Mitigative SSCs	Mitigative TSRs	Memo	Env Cons
W058-INTEG13c	Release of radioactive supernate to the soil surface from overflow of a diversion box due to piping system leak	Failure of primary and encasement piping due to corrosion plus mitigative features failure	SC: Trans Leak Detect Syss SS: Tank Level Detect Syss	LCO: Trans Leak Detect Syss AC: Trans Cntrls (Leak Prevention/ Detect/Cntrl)	SC: Trans Leak Detect Syss SS: Tank Level Detect Syss SC: Trans Sys Cvrs SC Trans Sys Supplemental Cvrs	LCO: Trans Sys Cvrs LCO: Trans Leak Detect Syss AC: Trans Cntrls (Leak Detect/Cntrl) AC: Emergency Prep (Significant Release) AC: Trans Pump Admin Lock Cntrls AC: Trans Sys Cvr Removal Cntrls JCO: Supplemental Cvrs	Controls based on accident analysis (Surface Leak Resulting in Pool).	E2
W058-INTEG13d	Release of radioactive supernate to the soil surface from overflow of a diversion box due to piping system leak	Failure of primary and encasement piping due to unrecognized material flaw plus mitigative features failure	SC: Trans Leak Detect Syss SS: Tank Level Detect Syss	LCO: Trans Leak Detect Syss AC: Trans Cntrls (Leak Prevention/ Detect/Cntrl)	SC: Trans Leak Detect Syss SS: Tank Level Detect Syss SC: Trans Sys Cvrs SC: Trans Sys Supplemental Cvrs	LCO: Trans Sys Cvrs LCO: Trans Leak Detect Syss AC: Trans Cntrls (Leak Detect/Cntrl) AC: Emergency Prep (Significant Release) AC: Trans Pump Admin Lock Cntrls AC: Trans Sys Cvr Removal Cntrls JCO: Supplemental Cvrs	Controls based on accident analysis (Surface Leak Resulting in Pool).	E2

Table 5.4-3. Safety Structures, Systems, and Components and Technical Safety Requirements for Potentially Severe (E3 and E2) Environmental Consequences. (107 Sheets)

ID	Hazardous Condition	Cause	Preventive SSCs	Preventive TSRs	Mitigative SSCs	Mitigative TSRs	Memo	Env Cons
W058-INTEG14a	Release of radioactive supernate to the soil surface from the underground piping between the SY-A or SY-B valve pit and a diversion box due to piping system leak	Failure of primary and encasement piping due to external event (airplane crash, volcanism, etc) plus mitigative features failure	SC: Pipe Encasements	AC: Encasement Seal Loops	SS: Tank Level Detect Syss SS: Salt Well Flow Totalizer	AC: Trans Cntrls (Leak Detect/Cntrl) AC: Emergency Prep (Significant Release) AC: Emergency Prep (Seismic)	Controls based on accident analyses (Subsurface Leak Resulting in Pool; and Natural Phenomena - Seismic).	E2
W058-INTEG14b	Release of radioactive supernate to the soil surface from overflow of a diversion box due to piping system leak	Failure of primary and encasement piping due to external event (airplane crash, volcanism, etc) plus mitigative features failure	SC: Trans Leak Detect Syss SS: Tank Level Detect Syss	LCO: Trans Leak Detect Syss AC: Trans Cntrls (Leak Prevention/ Detect/Cntrl)	SC: Trans Leak Detect Syss SS: Tank Level Detect Syss SC: Trans Sys Cvrs	LCO: Trans Sys Cvrs LCO: Trans Leak Detect Syss AC: Trans Cntrls (Leak Detect/Cntrl) AC: Emergency Prep (Seismic) AC: Emergency Prep (Significant Release) AC: Trans Pump Admin Lock Cntrls AC: Trans Sys Cvr Removal Cntrls	Controls based on accident analyses (Surface Leak Resulting in Pool; and Natural Phenomena - Seismic).	E2
W058-INTEG16a	Release of radioactive supernate to the soil surface from the underground piping between the SY-A or SY-B valve pit and a diversion box due to piping system leak	Failure of primary and encasement piping due to external event (excavation accident) plus mitigative features failure	None required	AC: Excavation Cntrls	None required	None required	Controls based on accident analysis (Spray Leak From Underground Waste Transfer Lines) Excavation of a buried line leads to a surface leak.	E2
W058-INTEG16b	Release of radioactive supernate to the soil surface from overflow of a diversion box due to piping system leak	Failure of primary and encasement piping due to external event (excavation accident) plus mitigative features failure	None required	AC: Excavation Cntrls	None required	None required	Controls based on accident analysis (Spray Leak From Underground Waste Transfer Lines) Excavation of a buried line leads to a surface leak.	E2

Table 5.4-3. Safety Structures, Systems, and Components and Technical Safety Requirements for Potentially Severe (E3 and E2) Environmental Consequences. (107 Sheets)

ID	Hazardous Condition	Cause	Preventive SSCs	Preventive TSRs	Mitigative SSCs	Mitigative TSRs	Memo	Env Cons
W058-INTEG18a	Release of radioactive supernate to the soil surface from the underground piping between the SY-A or SY-B valve pit and a diversion box due to piping system leak	Failure of primary and encasement piping due to external event (undermining from broken fluid transfer lines in vicinity) plus mitigative features failure	SC: Pipe Encasements	AC: Encasement Seal Loops	SS: Tank Level Detect Syss SS: Salt Well Flow Totalizer	AC: Trans Cntrls (Leak Detect/Cntrl) AC: Emergency Prep (Significant Release)	Controls based on accident analysis (Subsurface Leak Resulting in Pool).	E2
W058-INTEG18b	Release of radioactive supernate to the soil surface from overflow of a diversion box due to piping system leak	Failure of primary and encasement piping due to external event (undermining from broken fluid transfer lines in vicinity) plus mitigative features failure	SC: Trans Leak Detect Syss SS: Tank Level Detect Syss	LCO: Trans Leak Detect Syss AC: Trans Cntrls (Leak Prevention/ Detect/Cntrl)	SC: Trans Leak Detect Syss SS: Tank Level Detect Syss SC: Trans Sys Cvrs SC: Trans Sys Supplemental Cvrs	LCO: Trans Sys Cvrs LCO: Trans Leak Detect Syss AC: Trans Cntrls (Leak Detect/Cntrl) AC: Emergency Prep (Significant Release) AC: Trans Pump Admin Lock Cntrls AC: Trans Sys Cvr Removal Cntrls JCO: Supplemental Cvrs	Controls based on accident analysis (Surface Leak Resulting in Pool).	E2
W058-INTEG20a	Release of radioactive supernate to the soil surface from the underground piping between the SY-A or SY-B valve pit and a diversion box due to piping system leak	Failure of primary and encasement piping due to freezing	SC: Pipe Encasements	AC: Encasement Seal Loops	SS: Tank Level Detect Syss SS: Salt Well Flow Totalizer	AC: Trans Cntrls (Leak Detect/Cntrl) AC: Emergency Prep (Significant Release)	Controls based on accident analysis (Subsurface Leak Resulting in Pool).	E2

Table 5.4-3. Safety Structures, Systems, and Components and Technical Safety Requirements for Potentially Severe (E3 and E2) Environmental Consequences. (107 Sheets)

ID	Hazardous Condition	Cause	Preventive SSCs	Preventive TSRs	Mitigative SSCs	Mitigative TSRs	Memo	Env Cons
W058-INTEG20b	Release of radioactive supernate to the soil surface from overflow of a diversion box due to piping system leak	Failure of primary and encasement piping due to freezing	SC: Trans Leak Detect Syss SS: Tank Level Detect Syss	LCO: Trans Leak Detect Syss AC: Trans Cntrls (Leak Prevention/ Detect/Cntrl)	SC: Trans Leak Detect Syss SS: Tank Level Detect Syss SC: Trans Sys Cvrs SC: Trans Sys Supplemental Cvrs	LCO: Trans Sys Cvrs LCO: Trans Leak Detect Syss AC: Trans Cntrls (Leak Detect/Cntrl) AC: Emergency Prep (Significant Release) AC: Trans Pump Admin Lock Cntrls AC: Trans Sys Cvr Removal Cntrls JCO: Supplemental Cvrs	Controls based on accident analysis (Surface Leak Resulting in Pool).	E2
W058-INTEG22	Release of radioactive supernate to the soil surface from the underground piping between the SY-A or SY-B valve pit and a diversion box due to piping system leak	Failure of primary and encasement piping due to seismic event plus mitigative features failure	SC: Pipe Encasements	AC: Encasement Seal Loops	SS: Tank Level Detect Syss SS: Salt Well Flow Totalizer	AC: Trans Cntrls (Leak Detect/Cntrl) AC: Emergency Prep (Significant Release) AC: Emergency Prep (Seismic) AC: Emergency Prep	Controls based on accident analyses (Subsurface Leak Resulting in Pool; and Natural Phenomena - Seismic).	E2

Table 5.4-3. Safety Structures, Systems, and Components and Technical Safety Requirements for Potentially Severe (E3 and E2) Environmental Consequences. (107 Sheets)

ID	Hazardous Condition	Cause	Preventive SSCs	Preventive TSRs	Mitigative SSCs	Mitigative TSRs	Memo	Env Cons
W058-INTEG24	Release of radioactive slurry to the soil surface from overflow in the SY-A or SY-B valve pit due to piping system leak	External event (airplane crash, etc)	SC: Trans Leak Detect Syss SS: Tank Level Detect Syss	LCO: Trans Leak Detect Syss AC: Trans Cntrls (Leak Prevention/ Detect/Cntrl)	SC: Trans Leak Detect Syss SS: Tank Level Detect Syss SC: Trans Sys Cvrs	LCO: Trans Sys Cvrs LCO: Trans Leak Detect Syss AC: Trans Cntrls (Leak Detect/Cntrl) AC: Emergency Prep (Seismic) AC: Emergency Prep (Significant Release) AC: Trans Pump Admin Lock Cntrls AC: Trans Sys Cvr Removal Cntrls	Controls based on accident analyses (Surface Leak Resulting in Pool; and Natural Phenomena - Seismic).	E2
W058-INTEG26	Release of radioactive slurry to the soil surface from overflow in the SY-A or SY-B valve pit due to piping system leak	Seismic event plus mitigative features failure	SC: Trans Leak Detect Syss SS: Tank Level Detect Syss	LCO: Trans Leak Detect Syss AC: Trans Cntrls (Leak Prevention/ Detect/Cntrl)	SC: Trans Leak Detect Syss SS: Tank Level Detect Syss SC: Trans Sys Cvrs	LCO: Trans Sys Cvrs LCO: Trans Leak Detect Syss AC: Trans Cntrls (Leak Detect/Cntrl) AC: Emergency Prep (Seismic) AC: Emergency Prep (Significant Release) AC: Trans Pump Admin Lock Cntrls AC: Trans Sys Cvr Removal Cntrls	Controls based on accident analyses (Surface Leak Resulting in Pool; and Natural Phenomena - Seismic).	E2

Table 5.4-3. Safety Structures, Systems, and Components and Technical Safety Requirements for Potentially Severe (E3 and E2) Environmental Consequences. (107 Sheets)

ID	Hazardous Condition	Cause	Preventive SSCs	Preventive TSRs	Mitigative SSCs	Mitigative TSRs	Memo	Env Cons
W058-INTEG28	Release of radioactive supernate to the soil surface from overflow in the SY-A or SY-B valve pit due to piping system leak	External event (airplane crash, etc)	SC: Trans Leak Detect Syss SS: Tank Level Detect Syss	LCO: Trans Leak Detect Syss AC: Trans Cntrls (Leak Prevention/ Detect/Cntrl)	SC: Trans Leak Detect Syss SS: Tank Level Detect Syss SC: Trans Sys Cvrs	LCO: Trans Sys Cvrs LCO: Trans Leak Detect Syss AC: Trans Cntrls (Leak Detect/Cntrl) AC: Emergency Prep (Significant Release) AC: Emergency Prep (Seismic) AC: Trans Pump Admin Lock Cntrls AC: Trans Sys Cvr Removal Cntrls	Controls based on accident analyses (Surface Leak Resulting in Pool; and Natural Phenomena - Seismic).	E2
W058-INTEG30	Release of radioactive supernate to the soil surface from overflow in the SY-A or SY-B valve pit due to piping system leak (pool)	Seismic event	SC: Trans Leak Detect Syss SS: Tank Level Detect Syss	LCO: Trans Leak Detect Syss AC: Trans Cntrls (Leak Prevention/ Detect/Cntrl)	SC: Trans Leak Detect Syss SS: Tank Level Detect Syss SC: Trans Sys Cvrs	LCO: Trans Sys Cvrs LCO: Trans Leak Detect Syss AC: Trans Cntrls (Leak Detect/Cntrl) AC: Emergency Prep (Seismic) AC: Emergency Prep (Significant Release) AC: Trans Pump Admin Lock Cntrls AC: Trans Sys Cvr Removal Cntrls	Controls based on accident analyses (Surface Leak Resulting in Pool; and Natural Phenomena - Seismic).	E2

Table 5.4-3. Safety Structures, Systems, and Components and Technical Safety Requirements for Potentially Severe (E3 and E2) Environmental Consequences. (107 Sheets)

ID	Hazardous Condition	Cause	Preventive SSCs	Preventive TSRs	Mitigative SSCs	Mitigative TSRs	Memo	Env Cons
W058-PRES01	Release of radioactive slurry to the soil surface from overflow in the SY-A or SY-B valve pit due to piping system leak (pool)	Water hammer plus mitigative features failure	SC: Trans Leak Detect Syss SS: Tank Level Detect Syss SS: Salt Well Flow Totalizer	LCO: Trans Leak Detect Syss AC: Trans Cntrls (Leak Prevention/ Detect/Cntrl)	SC: Trans Leak Detect Syss SS: Tank Level Detect Syss SS: Salt Well Flow Totalizer SC: Trans Sys Cvrs SC: Trans Sys Supplemental Cvrs	LCO: Trans Sys Cvrs LCO: Trans Leak Detect Syss AC: Trans Cntrls (Leak Detect/Cntrl) AC: Emergency Prep (Significant Release) AC: Trans Pump Admin Lock Cntrls AC: Trans Sys Cvr Removal Cntrls JCO: Supplemental Cvrs	Controls based on accident analysis (Surface Leak Resulting in Pool).	E2
W058-PRES03	Release of radioactive supernate to the soil surface from overflow in the SY-A or SY-B valve pit due to piping system leak (pool)	Water hammer plus mitigative features failure	SC: Trans Leak Detect Syss SS: Tank Level Detect Syss	LCO: Trans Leak Detect Syss AC: Trans Cntrls (Leak Prevention/ Detect/Cntrl)	SC: Trans Leak Detect Syss SS: Tank Level Detect Syss SC: Trans Sys Cvrs	LCO: Trans Sys Cvrs LCO: Trans Leak Detect Syss AC: Trans Cntrls (Leak Detect/Cntrl) AC: Emergency Prep (Significant Release) AC: Trans Pump Admin Lock Cntrls AC: Trans Sys Cvr Removal Cntrls	Controls based on accident analysis (Surface Leak Resulting in Pool).	E2
XS-01-FLOW01	Release of radioactive aerosols from 244 TX DCRT due to ignition of flammable gas atmosphere	Pressure drop in transfer line releases flammable gas into DCRT atmosphere and ignition source causes deflagration	SC: DCRT Level Dip Tube Flow	LCO: DCRT Ventilation Sys AC: Ign Cntrls AC: Flammable Gas Mon Cntrls	None required	None required	Controls based on BIO Appendix E for DCRTs.	E2

Table 5.4-3. Safety Structures, Systems, and Components and Technical Safety Requirements for Potentially Severe (E3 and E2) Environmental Consequences. (107 Sheets)

ID	Hazardous Condition	Cause	Preventive SSCs	Preventive TSRs	Mitigative SSCs	Mitigative TSRs	Memo	Env Cons
XS-01-FLOW05	Release of radioactive contaminated liquid from transfer piping to 244 TX DCRT via the raw water system due to reverse flow of liquid waste (pool)	Mis-valving causes mixing of waste into raw water system that causes leak in the flush pit cover block	SC: Trans Leak Detect Syss SC: Pressure Switch Interlocks or Alarms (Water Service Lines) SS: Tank Level Detect Syss SS: Salt Well Flow Totalizer	LCO: Service Water Pressure Detect Syss AC: Trans Cntrls (Leak Prevention/ Detect/Cntrl)	SC: Trans Leak Detect Syss SS: Tank Level Detect Syss SS: Salt Well Flow Totalizer SC: Trans Sys Cvrs SC: Trans Sys Supplemental Cvrs	LCO: Trans Sys Cvrs LCO: Trans Leak Detect Syss AC: Trans Cntrls (Leak Detect/Cntrl) AC: Emergency Prep (Significant Release) AC: Trans Pump Admin Lock Cntrls AC: Trans Sys Cvr Removal Cntrls JCO: Supplemental Cvrs	Controls based on accident analysis (Surface Leak Resulting in Pool).	E2
XS-01-FLOW06	Release of liquid radioactive waste from saltwell pumping transfer piping in DCRT pump pit to surface due to overflow (pool)	Open jumper in single shell tank pump pit leads to overflowing of pump pit	SC: Trans Leak Detect Syss SS: Tank Level Detect Syss SS: Salt Well Flow Totalizer	LCO: Trans Leak Detect Syss AC: Trans Cntrls (Leak Prevention/ Detect/Cntrl)	SC: Trans Leak Detect Syss SS: Tank Level Detect Syss SS: Salt Well Flow Totalizer SC: Trans Sys Cvrs SC: Trans Sys Supplemental Cvrs	LCO: Trans Sys Cvrs LCO: Trans Leak Detect Syss AC: Trans Cntrls (Leak Detect/Cntrl) AC: Emergency Prep (Significant Release) AC: Trans Pump Admin Lock Cntrls AC: Trans Sys Cvr Removal Cntrls JCO: Supplemental Cvrs	Controls based on accident analysis (Surface Leak Resulting in Pool).	E2
XS-01-FLOW07	Release of liquid radioactive waste to the soil from transfer piping from SST to DCRT due to leakage (plume)	Pipe failure from various causes	None required	AC: Trans Cntrls (Mis-routing) AC: Trans Pump Admin Lock Cntrls	SS: Tank Level Detect Syss SS: Salt Well Flow Totalizer	AC: Trans Cntrls (Leak Detect/Cntrl)	Controls based on accident analysis (Subsurface Leak Remaining Subsurface) for single walled pipes.	E2

Table 5.4-3. Safety Structures, Systems, and Components and Technical Safety Requirements for Potentially Severe (E3 and E2) Environmental Consequences. (107 Sheets)

ID	Hazardous Condition	Cause	Preventive SSCs	Preventive TSRs	Mitigative SSCs	Mitigative TSRs	Memo	Env Cons
XS-01-PRES01	Release of liquid radioactive waste from damaged transfer piping to 244 TX DCRT due to over pressure (pool)	Use of wrong size pump and closed valve causes over pressure and subsequent pipe failure	SC: Pipe Encasements	AC: Encasement Seal Loops	SS: Tank Level Detect Syss SS: Salt Well Flow Totalizer	AC: Trans Cntrls (Leak Detect/Cntrl) AC: Emergency Prep (Significant Release)	Controls based on accident analysis (Subsurface Leak Resulting in Pool).	E2
XS-01-PRES02	Release of liquid radioactive waste from transfer pipe due to damaged saltwell pump	Leak from pump or seal from various causes	None	AC: Trans Cntrls (Leak Prevention and Mis-routing) AC: Trans Pump Admin Lock Cntrls	SC: Trans Sys Cvrs SC: Trans Sys Supplemental Cvrs SC: Trans Leak Detect Syss SS: Salt Well Flow Totalizer SS: Tank Level Detect Sys	LCO: Trans Sys Cvrs LCO: Trans Leak Detect Syss AC: Trans Cntrls (Mis-rout/Leak Detect/Cntrl) AC: Trans Pump Admin Lock Cntrls AC: Trans Sys Cvr Removal Cntrls AC: Emergency Prep (Significant Release) JCO: Supplemental Cvrs	These controls address this hazardous condition for worker risk by indicating leak and minimizing releases. The applicable controls for environmental release are identified from the Subsurface Leak Resulting in Pool accident analysis.	E2
XS-01-TEMP01	Release of steam-aerosol from transfer piping in pump pit due to steam hammer and resulting pipe damage	Extended recirculation and consequential heating of saltwell liquid with sudden opening of valve when cover block is open	None required	AC: Trans Pump Admin Lock Cntrls AC: Trans Cntrls (Mis-routing)	SC: Trans Sys Cvrs	LCO: Trans Sys Cvrs AC: Trans Sys Cvr Removal Cntrls	Controls based on accident analysis (Spray Leak in Structure or from Overground Waste Transfer Lines).	E2
XS-02-FLOW04	Release of liquid radioactive waste to soil from transfer pipe (non-pool) subsurface plume	Failure to adjust waste pH prior to transfer causes leak	SS: Pipe Encasements	AC: Trans Pump Admin Lock Cntrls	SS: Trans Leak Detect Syss SS: Tank Level Detect Syss	LCO: Trans Leak Detect Syss AC: Trans Cntrls (Leak Detect/Cntrl)	Controls based on accident analysis (Subsurface Leak Remaining Subsurface).	E2

Table 5.4-3. Safety Structures, Systems, and Components and Technical Safety Requirements for Potentially Severe (E3 and E2) Environmental Consequences. (107 Sheets)

ID	Hazardous Condition	Cause	Preventive SSCs	Preventive TSRs	Mitigative SSCs	Mitigative TSRs	Memo	Env Cons
XS-02-FLOW05	Release of liquid radioactive waste to the soil from PFP transfer piping due to pipe break	Pipe break from various causes	SC: Pipe Encasements	AC: Trans Cntrls (Mis-routing) AC: Encasement Seal Loops	SS: Tank Level Detect Syss SS: Salt Well Flow Totalizer	AC: Trans Cntrls (Leak Detect/Cntrl) AC: Emergency Prep (Significant Release)	Controls based on accident analysis (Subsurface Leak Resulting in Pool).	E2
XS-03-LEVE	Release of radioactive liquids from DCRT "annulus" (vault) due to DCRT leak	Corrosion or structural failure of DCRT or associated piping	None	None	SC: Trans Sys Cvrs SC: Trans Leak Detect Syss SS: Tank Level Detect Sys SS: Salt Well Flow Totalizer	LCO: Trans Sys Cvrs LCO: Trans Leak Detect Syss AC: Trans Cntrls (Mis-routing) AC: Trans Pump Admin Lock Cntrls AC: Trans Sys Cvr Removal Cntrls AC: Trans Cntrls (Material Balance)	These controls address this hazardous condition for worker risk from a Subsurface Leak Resulting in Pool by indicating leak and minimizing releases. These are also applicable controls from the Subsurface Leak Resulting in Pool accident analysis for environmental concerns. (DCRTs normally only contain waste during transfers.	E2
XS-03-LEVE01 XS-21-LEVE (244-S DCRT)	Release of combustion products from 244 TX DCRT due to flammable gas burn in tank atmosphere	Evaporation of DCRT contents causing decreased ability of waste to retain flammable gases and spark source	SC: DCRT Level Dip Tube Flow	LCO: DCRT Ventilation Syss AC: Ign Cntrls AC: Flammable Gas Mon Cntrls	None required	None required	Controls based on BIO Appendix E.	E2
XS-03-LEVE02 XS-21-LEVE (244-S DCRT)	Release of fission product gases and aerosols from 244 TX DCRT due to criticality	Evaporation of DCRT contents with increased solids settling on DCRT bottom creates critical mass	None required	AC: Nuclear Criticality Safety	None required	None required	Controls based on accident analysis (Nuclear Criticality).	E2
XS-03-PRES01 XS-21-PRES (244-S DCRT)	Release of liquid aerosols from 244 TX DCRT due to flammable gas burn in tank atmosphere	Loss of ventilation flow with accumulation of flammable gas and spark source	SC: DCRT Level Dip Tube Flow	LCO: DCRT Ventilation Syss AC: Ign Cntrls AC: Flammable Gas Mon Cntrls	None required	None required	Controls based on BIO Appendix E.	E2

Table 5.4-3. Safety Structures, Systems, and Components and Technical Safety Requirements for Potentially Severe (E3 and E2) Environmental Consequences. (107 Sheets)

ID	Hazardous Condition	Cause	Preventive SSCs	Preventive TSRs	Mitigative SSCs	Mitigative TSRs	Memo	Env Cons
XS-03-PRES05	Release of toxic vapors from DCRT due to increased concentrations in DCRT atmosphere	Transfer of steam from PFP causing evolution of toxic gases due to heating tank	None required	None required	None required	None required	No controls required based on accident analysis (Mixing of Incompatible Waste - Toxic Vapor Generation).	E2
XS-03-TEMP01 XS-21-TEMP (244-S DCRT)	Release of liquid radioactive waste from DCRT due to flow path to soil	Exceeding structural or corrosion limits on tank due to high temperature waste transfer to DCRT concurrent with vault leak	None	None	SS: Tank Level Detect Sys SS: Salt Well Flow Totalizer	AC: Trans Cntrls (Material Balance)	These are applicable controls from the Subsurface Leak Remaining Subsurface accident analysis. (DCRTs normally only contain waste during transfer operations).	E2
XS-03-TEMP02 XS-21-TEMP (244-S-DCRT)	Release of fission product gases and aerosols from 244 TX DCRT due to criticality	Transfer of material into tank that violates criticality specification	None required	AC: Nuclear Criticality Safety	None required	None required	Controls based on accident analysis (Nuclear Criticality).	E2
XS-03-TEMP03 XS-21-TEMP (244-S-DCRT)	Release of liquid aerosols from 244 TX DCRT due to flammable gas burn-fire/explosion in tank atmosphere	Buildup of gases, loss of ventilation, and spark source	SC: DCRT Level Dip Tube Flow	LCO: DCRT Ventilation Syss AC: Ign Cntrls AC: Flammable Gas Mon Cntrls	None required	None required	Controls based on BIO Appendix E.	E2
XS-03-TEMP04 XS-21-TEMP (244-S-DCRT)	Release of liquid radioactive waste from 244 TX DCRT due to overflow	Freezing temperatures causing raw water line break-leak with leakage to tank causes overflow	SS: Service Water Flow Totalizer	AC: Tank Service Water Intrusion Mon Program	SS: Service Water Flow Totalizer	AC: Tank Service Water Intrusion Mon Program	Controls based on accident analysis (Surface Leak Resulting in Pool).	E2
XS-05-TEMP01	Release to atmosphere of materials from DCRT ventilation filters and tank due to fire	Fire in ventilation system due to failure of ventilation heater controls	None required	None required	None required	AC: HEPA Filter Cntrls (Source Term)	Control for DCRTs based on accident analysis (HEPA Filter Failure - Exposure to High Temperature or Pressure).	E2

Table 5.4-3. Safety Structures, Systems, and Components and Technical Safety Requirements for Potentially Severe (E3 and E2) Environmental Consequences. (107 Sheets)

ID	Hazardous Condition	Cause	Preventive SSCs	Preventive TSRs	Mitigative SSCs	Mitigative TSRs	Memo	Env Cons
XS-05-TEMP02	Release to atmosphere of materials from DCRT ventilation filters and tank due to filter degradation	Fire in ventilation system due to flammable gas buildup and ignition	SC: DCRT Level Dip Tube Flow	LCO: DCRT Ventilation Sys AC: Ign Cntrls AC: Flammable Gas Mon Cntrls	None required	AC: HEPA Filter Cntrls (Source Term)	Controls based on BIO Appendix E and accident analysis (HEPA Filter Failure - Exposure to High Temperature or Pressure).	E2
XS-06-FLOW01	Release of fission product gases and aerosols from 244 TX DCRT due to criticality	Transfer of inadequately recirculated waste from tank due to failure to appropriately balance flow between recirculation and transfer line causing buildup of solids creating critical mass	None required	AC: Nuclear Criticality Safety	None required	None required	Controls based on accident analysis (Nuclear Criticality).	E2
XS-06-FLOW05	Release of waste from transfer pipe out of 244 TX DCRT to the soil due to flow path to soil	Concurrent failure of transfer piping and encasement	SC: Pipe Encasements	AC: Trans Cntrls (Mis-routing) AC: Encasement Seal Loops	SS: Tank Level Detect Syss SS: Salt Well Flow Totalizer	AC: Trans Cntrls (Leak Detect/Cntrl) AC: Emergency Prep (Significant Release)	Controls based on accident analysis (Subsurface Leak Resulting in Pool).	E2
XS-07-FLOW01	Release of radioactive waste to soil from transfer piping out of 244 TX DCRT due to leak in primary pipe and encasement	Excavation accident fails primary pipe and encasement	None required	AC: Excavation Cntrls	None required	None required	Controls based on accident analysis (Spray Leak From Underground Waste Transfer Lines).	E2
XS-07-FLOW02	Release of radioactive waste to soil from transfer piping out of 244 TX DCRT due to leak in primary pipe and encasement	Corrosion of inner and outer pipe	SC: Pipe Encasements	AC: Encasement Seal Loops	SS: Tank Level Detect Syss SS: Salt Well Flow Totalizer	AC: Trans Cntrls (Leak Detect/Cntrl) AC: Emergency Prep (Significant Release)	Controls based on accident analysis (Subsurface Leak Resulting in Pool).	E2
XS-07-FLOW03	Release of radioactive waste to soil from transfer pipe out of 244 TX DCRT due to leak in primary pipe and encasement	High structural loading from traffic or cranes cause failure of primary pipe and encasement	None required	None required	None required	None required	No controls required based on low accident frequency.	E2

Table 5.4-3. Safety Structures, Systems, and Components and Technical Safety Requirements for Potentially Severe (E3 and E2) Environmental Consequences. (107 Sheets)

ID	Hazardous Condition	Cause	Preventive SSCs	Preventive TSRs	Mitigative SSCs	Mitigative TSRs	Memo	Env Cons
XS-07-FLOW04	Release of radioactive waste to soil from transfer piping of 244 TX DCRT due to leak in primary pipe and encasement	Seismic event fails primary pipe and encasement	SC: Pipe Encasements	AC: Encasement Seal Loops	SS: Tank Level Detect Syss SS: Salt Well Flow Totalizer	AC: Trans Cntrls (Leak Detect/Cntrl) AC: Emergency Prep (Significant Release) AC: Emergency Prep (Seismic)	Controls based on accident analyses (Subsurface Leak Resulting in Pool; Natural Phenomena - Seismic).	E2
XS-07-FLOW05	Release of radioactive waste to soil from transfer pipe out of 244 TX DCRT due to leak in primary pipe and encasement	Undermining due to leak of nearby pipes cause failure of primary pipe and encasement	SC: Pipe Encasements	AC: Encasement Seal Loops	SS: Tank Level Detect Syss SS: Salt Well Flow Totalizer	AC: Trans Cntrls (Leak Detect/Cntrl) AC: Emergency Prep (Significant Release)	Controls based on accident analysis (Subsurface Leak Resulting in Pool).	E2
XS-07-FLOW06	Release of radioactive waste to soil from transfer pipe out of 244 TX DCRT due to leak in primary pipe and encasement	Water hammer causes failure of primary pipe and encasement	SC: Pipe Encasements	AC: Trans Pump Admin Lock Cntrls AC: Encasement Seal Loops	SS: Tank Level Detect Syss SS: Salt Well Flow Totalizer	AC: Trans Cntrls (Leak Detect/Cntrl) AC: Emergency Prep (Significant Release)	Controls based on accident analysis (Subsurface Leak Resulting in Pool; and Surface Leak Resulting in Pool).	E2
XS-11-LEVE01	Release of radioactive waste from diversion box to surface due to overflow of transfer from 244 TX	Plugged drain and misrouting causes overflow	SC: Trans Leak Detect Syss SS: Tank Level Detect Syss SS: Salt Well Flow Totalizer	LCO: Trans Leak Detect Syss AC: Trans Cntrls (Leak Prevention/ Detect/Cntrl)	SC: Trans Leak Detect Syss SS: Tank Level Detect Syss SS: Salt Well Flow Totalizer SC: Trans Sys Cvrs	LCO: Trans Sys Cvrs LCO: Trans Leak Detect Syss AC: Trans Cntrls (Leak Detect/Cntrl) AC: Emergency Prep (Significant Release) AC: Trans Pump Admin Lock Cntrls AC: Trans Sys Cvr Removal Cntrls	Controls based on accident analysis (Surface Leak Resulting in Pool).	E2

Table 5.4-3. Safety Structures, Systems, and Components and Technical Safety Requirements for Potentially Severe (E3 and E2) Environmental Consequences. (107 Sheets)

ID	Hazardous Condition	Cause	Preventive SSCs	Preventive TSRs	Mitigative SSCs	Mitigative TSRs	Memo	Env Cons
XS-11-LEVE02	Release of radioactive waste from diversion box to surface due to overflow of transfer from 244 TX	Plugged drain and open jumper causes overflow	SC: Trans Leak Detect Syss SS: Tank Level Detect Syss SS: Salt Well Flow Totalizer	LCO: Trans Leak Detect Syss AC: Trans Cntrls (Leak Prevention/ Detect/Cntrl)	SC: Trans Leak Detect Syss SS: Tank Level Detect Syss SS: Salt Well Flow Totalizer SC: Trans Sys Cvrs	LCO: Trans Sys Cvrs LCO: Trans Leak Detect Syss AC: Trans Cntrls (Leak Detect/Cntrl) AC: Emergency Prep (Significant Release) AC: Trans Pump Admin Lock Cntrls AC: Trans Sys Cvr Removal Cntrls	Controls based on accident analysis (Surface Leak Resulting in Pool).	E2
XS-11-LEVE03	Release of radioactive waste from diversion box to surface due to overflow	Plugged drain and piping leak causes overflow	SC: Trans Leak Detect Syss SS: Tank Level Detect Syss SS: Salt Well Flow Totalizer	LCO: Trans Leak Detect Syss AC: Trans Cntrls (Leak Prevention/ Detect/Cntrl)	SC: Trans Leak Detect Syss SS: Tank Level Detect Syss SS: Salt Well Flow Totalizer SC: Trans Sys Cvrs	LCO: Trans Sys Cvrs LCO: Trans Leak Detect Syss AC: Trans Cntrls (Leak Detect/Cntrl) AC: Emergency Prep (Significant Release) AC: Trans Pump Admin Lock Cntrls AC: Trans Sys Cvr Removal Cntrls	Controls based on accident analysis (Surface Leak Resulting in Pool).	E2

Table 5.4-3. Safety Structures, Systems, and Components and Technical Safety Requirements for Potentially Severe (E3 and E2) Environmental Consequences. (107 Sheets)

ID	Hazardous Condition	Cause	Preventive SSCs	Preventive TSRs	Mitigative SSCs	Mitigative TSRs	Memo	Env Cons
XS-12-FLOW05	Release of radioactive waste from diversion box to surface due to overflow of transfer from 244 TX	Backflow from catch tank causes overflow from diversion box	SC: Trans Leak Detect Syss SS: Tank Level Detect Syss	LCO: Trans Leak Detect Syss AC: Trans Cntrls (Leak Prevention/ Detect/Cntrl)	SC: Trans Leak Detect Syss SS: Tank Level Detect Syss SC: Trans Sys Cvrs	LCO: Trans Sys Cvrs LCO: Trans Leak Detect Syss AC: Trans Cntrls (Leak Detect/Cntrl) AC: Emergency Prep (Significant Release) AC: Trans Pump Admin Lock Cntrls AC: Trans Sys Cvr Removal Cntrls	Controls based on accident analysis (Surface Leak Resulting in Pool).	E2
XS-12-FLOW06	Release of radioactive waste to the soil from diversion box drain due to a spill of radioactive liquid into 241-U-152 diversion box	Leak of diversion box drain line upstream of catch tank	None	AC: Trans Cntrls (Leak Prevention and Mis-routing) AC: Trans Pump Admin Lock Cntrls	SC: Trans Sys Cvrs SC: Trans Leak Detect Syss SS: Salt Well Flow Totalizer SS: Tank Level Detect Sys	LCO: Trans Sys Cvrs LCO: Trans Leak Detect Syss AC: Trans Cntrls (Mis-rout) AC: Trans Pump Admin Lock Cntrls AC: Trans Sys Cvr Removal Cntrls AC: Trans Cntrls (Leak Detect/Cntrl) AC: Emergency Prep (Significant Release)	These are applicable controls from the Subsurface Leak Resulting in Pool accident analysis. These controls also address this hazardous condition for worker risk by indicating leak and minimizing releases.	E2
XS-13-LEVE	Release of liquid radioactive waste to soil from 241-U-301B catch tank due to leak in catch tank contents to soil	Failure of catch tank due to various causes	None	None	SS: Trans Leak Detect Syss	AC: Trans Cntrls (Leak Detect/Cntrl)	These are applicable controls from the Subsurface Leak Remaining Subsurface accident analysis.	E2

Table 5.4-3. Safety Structures, Systems, and Components and Technical Safety Requirements for Potentially Severe (E3 and E2) Environmental Consequences. (107 Sheets)

ID	Hazardous Condition	Cause	Preventive SSCs	Preventive TSRs	Mitigative SSCs	Mitigative TSRs	Memo	Env Cons
XS-13-PRES01	Release of radioactive aerosols from 241-U-301B catch tank due to chemical reaction	Draining of incompatible chemicals to catch tank	None required	None required	None required	None required	No controls required based on accident analysis (Mixing of Incompatible Material - Tank Pressurization).	E2
XS-13-PRES02	Release of radioactive aerosols from 241-U-301B catch tank due to fire/explosion of flammable gas	Buildup of flammable gas in catch tank and spark source	None required	AC: Ign Cntrls AC: Flammable Gas Mon Cntrls	None required	None required	Controls based on BIO Appendix E.	E2
XS-13-PRES04	Release of fission product gases and aerosols from catch tank 241-U-301B due to criticality	Transfer of excess fissile material to catch tank creates critical mass	None required	AC: Nuclear Criticality Safety	None required	None required	Controls based on accident analysis (Nuclear Criticality).	E2
XS-20-FLOW01	Release of radioactive aerosols from 244 TX DCRT due to chemical reaction	Transfer of incompatible waste to 244 TX DCRT due to improper valve lineup	None required	AC: Trans Cntrls (pH)	SS: HEPA Filters (244-S, 244 TX, 244-A)	AC: HEPA Filter Cntrls (Aerosol Testing)	Controls based on accident analysis (Mixing of Incompatible Material - Tank Pressurization).	E2
XS-20-FLOW02	Release of radioactive aerosols from T-Plant tank due to chemical reaction	Transfer of incompatible waste to T-Plant due to improper valve lineup	None	AC: Trans Cntrls (Mis-routing)	None	None	These are applicable controls from the Subsurface Leak Resulting in Pool accident analysis.	E2
XS-20-FLOW03	Release of radioactive aerosols from 244 TX DCRT due to positive pressure caused by chemical reaction	Chemical reaction of 244-S material with contents of 244 TX caused by misrouting	None required	None required	None required	None required	No controls required based on accident analysis (Mixing of Incompatible Waste - Tank Pressurization).	E2
XS-20-FLOW04	Release of toxic vapors from 244 TX DCRT due to chemical reaction with incompatible material in 244-S DCRT	Mixing contents of 244 TX and 244-S due to misrouting causes chemical reaction	None required	None required	None required	None required	No controls required based on accident analysis (Mixing of Incompatible Waste - Toxic Vapor Generation).	E2

Table 5.4-3. Safety Structures, Systems, and Components and Technical Safety Requirements for Potentially Severe (E3 and E2) Environmental Consequences. (107 Sheets)

ID	Hazardous Condition	Cause	Preventive SSCs	Preventive TSRs	Mitigative SSCs	Mitigative TSRs	Memo	Env Cons
XS-20-FLOW05	Release of fission product gases and aerosols from 244-S DCRT (not designated solids receiver) due to criticality	Transfer of waste from 244 TX DCRT due to improper valve lineup creates critical mass	None required	AC: Nuclear Criticality Safety	None required	None required	Controls based on accident analysis (Nuclear Criticality).	E2
XS-20-FLOW06	Release of radioactive aerosols from T-Plant tank due to positive pressure	Chemical reaction of 244-S material with contents of T-Plant tank due to misrouting causes positive pressure in tank	None	AC: Trans Cntrls (Mis-routing)	None	None	These are applicable controls from the Subsurface Leak Resulting in Pool accident analysis.	E2
XS-20-FLOW07	Release of toxic vapors from T-Plant due to chemical reaction with incompatible material in 244-S DCRT	Mixing contents of 244-S with contents of T-Plant tank due to misrouting causes chemical reaction	None	AC: Trans Cntrls (Mis-routing)	None	None	These are applicable controls from the Subsurface Leak Resulting in Pool accident analysis.	E2
XS-20-FLOW08	Release of radioactive waste from 244 TX DCRT to surface due to overflow	Transfer of excess waste to 244 TX DCRT due to improper valve lineup causes overflow	SC: Trans Leak Detect Syss SS: Tank Level Detect Syss SS: Salt Well Flow Totalizer	LCO: Trans Leak Detect Syss AC: Trans Cntrls (Leak Prevention/ Detect/Cntrl)	SC: Trans Leak Detect Syss SS: Tank Level Detect Syss SS: Salt Well Flow Totalizer SC: Trans Sys Cvrs	LCO: Trans Sys Cvrs LCO: Trans Leak Detect Syss AC: Trans Cntrls (Leak Detect/Cntrl) AC: Emergency Prep (Significant Release) AC: Trans Pump Admin Lock Cntrls AC: Trans Sys Cvr Removal Cntrls	Controls based on accident analysis (Surface Leak Resulting in Pool).	E2

Table 5.4-3. Safety Structures, Systems, and Components and Technical Safety Requirements for Potentially Severe (E3 and E2) Environmental Consequences. (107 Sheets)

ID	Hazardous Condition	Cause	Preventive SSCs	Preventive TSRs	Mitigative SSCs	Mitigative TSRs	Memo	Env Cons
XS-20-FLOW09	Release of radioactive waste from 244S DCRT to surface due to overflow	Transfer of waste from 244 TX DCRT due to improper valve lineup causes overflow	SC: Trans Leak Detect Syss SS: Tank Level Detect Syss	LCO: Trans Leak Detect Syss AC: Trans Cntrls (Leak Prevention/ Detect/Cntrl)	SC: Trans Leak Detect Syss SS: Tank Level Detect Syss SC: Trans Sys Cvrs	LCO: Trans Sys Cvrs LCO: Trans Leak Detect Syss AC: Trans Cntrls (Leak Detect/Cntrl) AC: Emergency Prep (Significant Release) AC: Trans Pump Admin Lock Cntrls AC: Trans Sys Cvr Removal Cntrls	Controls based on accident analysis (Surface Leak Resulting in Pool).	E2
XS-26-PRES XS-26-TEMP	Release of toxic vapors from Tank 241-SY-102 due to chemical reaction	Mistransfer of incompatible waste causes chemical reaction	None required	None required	None required	None required	No controls required based on accident analysis (Mixing of Incompatible Waste - Toxic Vapor Generation).	E2
XS-26-PRES XS-26-TEMP 102-AW-TEMP (FOR TK-102-AW)	Release of fission product gases and aerosols from Tank 241-SY-102 due to criticality	Transfer of critical mass of fissile material and achievement of critical geometry	None required	AC: Nuclear Criticality Safety	None required	None required	Controls based on accident analysis (Nuclear Criticality).	E2
XS-26-PRES01	Release of radioactive aerosols from Tank 241-SY-102 due to chemical reaction	Mis-transfer of incompatible waste causes chemical reaction	None required	None required	None required	None required	No controls required based on accident analysis (Mixing of Incompatible Material - Tank Pressurization).	E2

Table 5.4-3. Safety Structures, Systems, and Components and Technical Safety Requirements for Potentially Severe (E3 and E2) Environmental Consequences. (107 Sheets)

ID	Hazardous Condition	Cause	Preventive SSCs	Preventive TSRs	Mitigative SSCs	Mitigative TSRs	Memo	Env Cons
XS-26-PRES02	Release of radioactive aerosols from Tank 241-SY-102 due to flammable gas fire/explosion (dome collapse)	Accumulation of flammable gases in vapor space and spark source	SC: Primary Tank Leak Detect Syss SC: DST/AWF Ventilation	LCO: DST and AWF Tank Ventilation Syss LCO: Primary Tank Leak Detect Syss AC: Flammability Cntrls AC: Ign Cntrls AC: Flammable Gas Mon Cntrls AC: Ign Cntrls (Lightning)	None required	None required	Controls based on BIO Appendix E; and accident analysis (Natural Phenomena - Lightning).	E2
XS-26-TEMP01	Release of radioactive aerosols from Tank 241-AW-102 due to tank bump	High heat waste plus loss of cooling contributes to tank bump	SS: Temperature Mon Sys SS: Tank Level Detect Sys	LCO: SST Waste Temperature Cntrls LCO: DST and AWF Tanks Waste Temperature Cntrls AC: Trans Cntrls	None required	None required	Controls based on accident analysis (Tank Bump).	E2
XS-35-FLOW01	Release of radioactive liquid waste to soil from 242-S Evaporator due to leak of un-encased direct buried piping (plume)	Corrosion or other causes	None	None	None	None	Assuming no 242-S Evap D&D, MAR from 242-S sump would only be slightly contaminated water.	E2
XS-35-FLOW02	Release of radioactive waste to surface from 242-S Evaporator sump due to backflow to and overflow	Human error of leaving open flow path after emptying the sump and backflow and subsequent overflow	SS: Tank Level Detect Syss	AC: Trans Cntrls (Leak Prevention/ Detect)	SS: Tank Level Detect Syss	AC: Trans Cntrls (Leak Detect)	Controls based on accident analysis (Surface Leak Resulting in Pool).	E2

Table 5.4-3. Safety Structures, Systems, and Components and Technical Safety Requirements for Potentially Severe (E3 and E2) Environmental Consequences. (107 Sheets)

ID	Hazardous Condition	Cause	Preventive SSCs	Preventive TSRs	Mitigative SSCs	Mitigative TSRs	Memo	Env Cons
XS-37-FLOW01	Release of radioactive liquid waste from catch tank to surface due to overfilling (pool)	Leak of transfer piping with drainage to catch tank causes overflow	SC: Trans Leak Detect Syss SS: Tank Level Detect Syss SS: Salt Well Flow Totalizer	LCO: Trans Leak Detect Syss AC: Trans Cntrls (Leak Prevention/ Detect/Cntrl)	SC: Trans Leak Detect Syss SS: Tank Level Detect Syss SS: Salt Well Flow Totalizer SC: Trans Sys Cvrs SC: Trans Sys Supplemental Cvrs	LCO: Trans Sys Cvrs LCO: Trans Leak Detect Syss AC: Trans Cntrls (Leak Detect/Cntrl) AC: Emergency Prep (Significant Release) AC: Trans Pump Admin Lock Cntrls AC: Trans Sys Cvr Removal Cntrls JCO: Supplemental Cvrs	Controls based on accident analysis (Surface Leak Resulting in Pool).	E2
XS-37-FLOW02	Release of radioactive liquid waste to soil from transfer piping due to leak of liquid waste from concrete encasement (subsurface plume)	Leak of transfer piping with encasement leak or blocked drain to catch tank (liquid oozes out concrete encasement)	SS: Pipe Encasements	AC: Trans Cntrls (Mis-routing) AC: Trans Pump Admin Lock Cntrls	SS: Trans Leak Detect Syss SS: Tank Level Detect Syss	LCO: Trans Leak Detect Syss AC: Trans Cntrls (Leak Detect/Cntrl)	Controls based on accident analysis (Subsurface Leak Remaining Subsurface).	E2
XS-41A-FLOW01	Release of radioactive waste from vent station nozzle pit to surface due to overflow	Catastrophic failure of vent piping causes overflow of nozzle pit	SC: Trans Leak Detect Syss SS: Tank Level Detect Syss	LCO: Trans Leak Detect Syss AC: Trans Cntrls (Leak Prevention/ Detect/Cntrl)	SC: Trans Leak Detect Syss SS: Tank Level Detect Syss SC: Trans Sys Cvrs	LCO: Trans Sys Cvrs LCO: Trans Leak Detect Syss AC: Trans Cntrls (Leak Detect/Cntrl) AC: Emergency Prep (Significant Release) AC: Trans Pump Admin Lock Cntrls AC: Trans Sys Cvr Removal Cntrls	Controls based on accident analysis (Surface Leak Resulting in Pool).	E2

Table 5.4-3. Safety Structures, Systems, and Components and Technical Safety Requirements for Potentially Severe (E3 and E2) Environmental Consequences. (107 Sheets)

ID	Hazardous Condition	Cause	Preventive SSCs	Preventive TSRs	Mitigative SSCs	Mitigative TSRs	Memo	Env Cons
XS-41A-FLOW02	Release of radioactive waste to surface from vent station nozzle pit due to overflow	Vent valve left open or leaking during transfer causes overflow	SC: Trans Leak Detect Syss SS: Tank Level Detect Syss	LCO: Trans Leak Detect Syss AC: Trans Cntrls (Leak Prevention/ Detect/Cntrl)	SC: Trans Leak Detect Syss SS: Tank Level Detect Syss SC: Trans Sys Cvrs	LCO: Trans Sys Cvrs LCO: Trans Leak Detect Syss AC: Trans Cntrls (Leak Detect/Cntrl) AC: Emergency Prep (Significant Release) AC: Trans Pump Admin Lock Cntrls AC: Trans Sys Cvr Removal Cntrls	Controls based on accident analysis (Surface Leak Resulting in Pool).	E2
XS-41B-LEVE01	Release of radioactive aerosols from vent station catch tank due to flammable gas fire/ explosion in nozzle pit	Failure to empty catch tank with buildup of flammable gas in nozzle pit plus ignition source	None required	AC: Ign Cntrls AC: Flammable Gas Mon Cntrls	None required	None required	Controls based on BIO Appendix E.	E2
XS-41B-LEVE03	Release of radioactive waste to surface from vent station nozzle pit due to overflow	Failure to empty catch tank, causing overflow of tank and pit due to transfer failure	SC: Trans Leak Detect Syss SS: Tank Level Detect Syss	LCO: Trans Leak Detect Syss AC: Trans Cntrls (Leak Prevention/ Detect/Cntrl)	SC: Trans Leak Detect Syss SS: Tank Level Detect Syss SC: Trans Sys Cvrs	LCO: Trans Sys Cvrs LCO: Trans Leak Detect Syss AC: Trans Cntrls (Leak Detect/Cntrl) AC: Emergency Prep (Significant Release) AC: Trans Pump Admin Lock Cntrls AC: Trans Sys Cvr Removal Cntrls	Controls based on accident analysis (Surface Leak Resulting in Pool).	E2
XS-41C-LEVE01	Release of radioactive aerosols from vent station catch tank due to flammable gas fire/ explosion in catch tank pit	Leak of catch tank with buildup of flammable gas in catch tank pit plus ignition source	None required	AC: Ign Cntrls AC: Flammable Gas Mon Cntrls	None required	None required	Controls based on BIO Appendix E.	E2

Table 5.4-3. Safety Structures, Systems, and Components and Technical Safety Requirements for Potentially Severe (E3 and E2) Environmental Consequences. (107 Sheets)

ID	Hazardous Condition	Cause	Preventive SSCs	Preventive TSRs	Mitigative SSCs	Mitigative TSRs	Memo	Env Cons
XS-48-FLOW	Release of liquid waste to soil from transfer piping between B-Plant and 241-ER-152 diversion box due to leak (plume)	Piping failure from various causes	SS: Pipe Encasements	AC: Trans Cntrls (Mis-routing) AC: Trans Pump Admin Lock Cntrls	SS: Trans Leak Detect Syss SS: Tank Level Detect Syss	LCO: Trans Leak Detect Syss AC: Trans Cntrls (Leak Detect/Cntrl)	Controls based on accident analysis (Subsurface Leak Remaining Subsurface).	E2
XS-52-FLOW01	Release of radioactive waste to surface from transfer piping to Tank 244-CR-003 due to leak (pool)	Failure of pipe from various causes	SC: Pipe Encasements	AC: Trans Cntrls (Mis-routing) AC: Encasement Seal Loops	SS: Tank Level Detect Syss SS: Salt Well Flow Totalizer	AC: Trans Cntrls (Leak Detect/Cntrl) AC: Emergency Prep (Significant Release)	Controls based on accident analysis (Subsurface Leak Resulting in Pool).	E2
XS-52-FLOW02	Release of radioactive waste from Tank 244-CR-003 to surface due to overflow (pool)	Mis-valving or valve failure during cross-site transfer causes overflow	SC: Trans Leak Detect Syss SS: Tank Level Detect Syss	LCO: Trans Leak Detect Syss AC: Trans Cntrls (Leak Prevention/ Detect/Cntrl)	SC: Trans Leak Detect Syss SS: Tank Level Detect Syss SC: Trans Sys Cvrs	LCO: Trans Sys Cvrs LCO: Trans Leak Detect Syss AC: Trans Cntrls (Leak Detect/Cntrl) AC: Emergency Prep (Significant Release) AC: Trans Pump Admin Lock Cntrls AC: Trans Sys Cvr Removal Cntrls	Controls based on accident analysis (Surface Leak Resulting in Pool).	E2

This page intentionally left blank.

CHAPTER 6.0
OPERATIONAL CONTROLS

This page intentionally left blank.

CHAPTER 6.0
OPERATIONAL CONTROLS

CONTENTS

6.0 OPERATIONAL CONTROLS 6-1
6.1 BASIS FOR INTERIM OPERATION CONTROLS 6-1
6.1.1 Scope of Controls 6-1
6.1.2 Control Selection Process 6-2
6.1.3 Specific Basis for Interim Operation Controls 6-2
6.2 REFERENCES 6-3

LIST OF TABLES

6-1. Hazard and Accident Analyses; Safety Structures, Systems, and Components; and Technical Safety Requirement Cross Reference T6-1

LIST OF TERMS

AC	Administrative Control
AWF	Aging Waste Facility
BIO	Basis for Interim Operation
CAM	continuous air monitor
CPS	criticality prevention specification
CSER	criticality safety evaluation report
DCRT	double-contained receiver tank
DOE	U.S. Department of Energy
DST	double-shell tank
HASP	Health and Safety Plan
HEGA	high-efficiency gas adsorber
HEME	high-efficiency mist eliminator
HEPA	high-efficiency particulate air (filter)
JCO	Justification for Continued Operation
LANL	Los Alamos National Laboratory
LCO	Limiting Condition for Operation
LCS	Limiting Control Setting
LFL	Lower Flammability Limit
MISF	miscellaneous inactive storage facility
NFPA	National Fire Protection Association
OGT	overground transfer (line)
PRV	pressure relief valve
RCSTS	Replacement Cross-Site Transfer System
RL	U.S. Department of Energy, Richland Operations Office
SARP	Safety Analysis Report for Packaging
SC	Safety-Class
SEP	safety evaluation for packaging
SL	Safety Limit
SR	surveillance requirement
SS	Safety-Significant
SSC	structure, system, and component
SST	single-shell tank
TSR	Technical Safety Requirement
TWRS	Tank Waste Remediation System
U.S. DOT	U.S. Department of Transportation
WRSS	Waste Retrieval Sluicing System

6.0 OPERATIONAL CONTROLS

This document defines the operating envelope for those Tank Waste Remediation System (TWRS) facilities within its scope (Chapter 1.0, "Introduction"). Operational controls are detailed in Chapter 5.0, "Safety Analysis" and summarized in this chapter. Supplemental operational control information specific to the projects is included in the designated addenda. The safety analysis and controls for the Waste Retrieval Sluicing System (WRSS) operations are contained in Addendum 1, "Tank 241-C-106 Sluicing Safety Analysis." The safety analysis and controls for the replacement cross-site transfer system are contained in Addendum 2, "Safety Analysis for the Replacement Cross-Site Transfer System" and summarized in Table 6-1. The safety analysis and controls for the 241-AZ-702 ventilation system are contained in Addendum 3, "702-AZ Ventilation System (241-AZ-702) Safety Analysis" and summarized in Table 6-1. The safety analysis and controls for the 241-AZ-101 mixer pump test are contained in Addendum 4, "Safety Analysis for Tank 241-AZ-101 Mixer Pump Test."

This chapter provides the operating restrictions and administrative controls that are necessary to preserve the validity of the safety analysis assumptions and to ensure that TWRS is operated within the required conditions bounded by the analysis. The controls discussed in this chapter are implemented through HNF-SD-WM-TSR-006, *Tank Waste Remediation System Technical Safety Requirements*. HNF-SD-WM-TSR-006 was prepared using the guidance in DOE 5480.22, *Technical Safety Requirements*. The controls are also implemented through other non-TSR control documents (e.g., HNF-SD-WM-HSP-002, *Tank Farms Health and Safety Plan* [HASP]).

6.1 BASIS FOR INTERIM OPERATION CONTROLS

6.1.1 Scope of Controls

Consistent with DOE 5480.23, *Nuclear Safety Analysis Reports* and the DOE-STD-3009-94, *Preparation Guide for U.S. Department of Energy Nonreactor Nuclear Facility Safety Analysis Reports*, the controls identified in this Basis for Interim Operation (BIO) address hazards for the offsite public, onsite worker, and facility worker. The hazards address both radiological and toxicological sources.

Controls designated to prevent or mitigate radiological consequences that exceed both the radiological and toxicological risk guidelines are evaluated to ensure that the controls also protect against toxicological hazards. If a radiological-based control does not also bring toxicological consequences within risk guidelines, a separate control is provided to mitigate or prevent those toxicological consequences. Controls for toxicological hazards where the consequences do not exceed risk guidelines are implemented through the HASP.

6.1.2 Control Selection Process

The hazard analysis results, together with the accident analysis results, were used to identify Safety-Class and Safety-Significant structures, systems and components, TSRs and other controls required to protect the offsite public, onsite worker, and facility worker. The control selection process is discussed in more detail in Chapter 5.0.

The BIO specifically considers the impact of identified hazards upon the facility worker and identifies those controls necessary to protect a facility worker from life threatening hazards or hazards that could result in serious injury. The controls identified to protect the offsite public, onsite worker, and facility worker also provide protection against most of the hazardous conditions that have significant environmental consequences. When additional controls were required they were selected in accordance with the discussion in Chapter 5.0. In addition, this process also identified controls that provided significant Defense-in-Depth.

6.1.3 Specific Basis for Interim Operation Controls

The operational controls selected for each accident analysis described in Chapter 5.0 are presented in Table 6-1. Additionally, Table 6-1 includes controls identified in Addenda 2 and 3. This table identifies the selected TSR control and its derivation basis. The TSR document contains the specific details of the controls. Following is a discussion of the sections included in Table 6-1.

The "Analyzed Accident/BIO Section Reference" column contains the title of the candidate accidents and a cross-reference to the applicable section from Chapter 5.0 which contains the discussion of the accident. A list of the representative hazards associated with the candidate accidents is provided in the tables in Section 5.4, "Engineered and Administrative Controls."

The "Safety Structures, Systems, and Components" column contains a composite list of the Safety-Class and Safety-Significant structures, systems, and components associated with each candidate accident.

The "Technical Safety Requirement" column lists the specific section in the TSR (e.g., LCO 3.1.1 Transfer System Covers and Entry Doors) where the controls selected for the candidate accident are included. A brief summary of the key program elements for the Administrative Controls (ACs) is included. The TSR document contains more details on the specific controls. Table 5.4-1 must be consulted to identify the controls selected for each representative hazard. The numerical parameters included in this column are in English units since these are the units used by operations personnel.

The "Derivation Basis" column is a brief statement of why the control was selected and what function the control is performing or providing. In addition, controls that are not specifically included in the TSR are discussed in this section.

6.2 REFERENCES

49 CFR 173.403, *Definitions*, Title 49, *Code of Federal Regulations*, Subpart I, as amended, U.S. Department of Transportation, Washington, D.C.

49 CFR 173.425, *Transport Requirements for Low Specific Activity (LSA) Radioactive Materials*, Title 49, *Code of Federal Regulations*, Subpart I, as amended, U.S. Department of Transportation, Washington, D.C.

49 CFR 173.435, *Table of A_1 and A_2 Values for Radionuclides*, Title 49, *Code of Federal Regulations*, Subpart I, as amended, U.S. Department of Transportation, Washington, D.C.

DOE 5480.22, 1996, *Technical Safety Requirements*, Change 2, U.S. Department of Energy, Washington, D.C.

DOE 5480.23, 1994, *Nuclear Safety Analysis Reports*, Change 1, U.S. Department of Energy, Washington, D.C.

DOE-RL-92-36, 1993, *Hanford Site Hoisting and Rigging Manual*, U.S. Department of Energy, Richland Operations Office, Richland, Washington.

DOE-STD-1027-92, 1992, *Hazard Categorization and Accident Analysis Techniques for Compliance with DOE Order 5480.23, Nuclear Safety Analysis Reports*, U.S. Department of Energy, Washington, D.C.

DOE-STD-3009-94, 1994, *Preparation Guide for U.S. Department of Energy Nonreactor Nuclear Facility Safety Analysis Reports*, U.S. Department of Energy, Washington, D.C.

HNF-2296, 1998, *Justification for Continued Operation of Transfer Lines Having Structures with Less Volume than 241-A-A Valve Pit*, Rev. 0, Duke Engineering and Services Hanford, Inc., Richland, Washington

HNF-SD-WM-HSP-002, 1998, *Tank Farms Health and Safety Plan*, Rev. 3, Lockheed Martin Hanford Corporation, Richland, Washington.

HNF-SD-WM-TSR-006, 1997, *Tank Waste Remediation System Technical Safety Requirements*, Fluor Daniel Hanford, Inc., Richland, Washington.

NFPA, 1996, National Electric Code, Articles 500-Hazardous (Classified) Locations and 501-Class 1 Locations, NFPA 70, National Fire Protection Association, Quincy, Massachusetts.

Wagoner, J. D., 1998, *Authorization Basis Approval of Justification for Continued Operation (JCO) of Transfer Lines Having Structures With Less Volume Than the 241-A-A Valve Pit*, (Letter 98-WSD-052 to H. J. Hatch, Fluor Daniel Hanford, Inc., March 17), U.S. Department of Energy, Richland Operations Office, Richland, Washington.

WHC-SD-RE-SAP-013, 1993, *Safety Analysis Report for Packaging, Railroad Liquid Waste Tank Cars*, Rev. 6, Westinghouse Hanford Company, Richland, Washington.

WHC-SD-TP-SEP-011, 1996, *Safety Evaluation for Packaging for the 222-S Laboratory Cargo Tank*, Rev. 1, Westinghouse Hanford Company, Richland, Washington.

WHC-SD-WM-SAD-035, 1997, *A Safety Assessment of Rotary Mode Core Sampling in Flammable Gas Single Shell Tanks: Hanford Site, Richland, Washington*, Rev. 0-b, Duke Engineering and Services Hanford, Richland, Washington.

Table 6-1. Hazard and Accident Analyses; Safety Structures, Systems, and Components; and Technical Safety Requirement Cross Reference. (25 sheets)

Analyzed Accident/ BIO Section Reference	Safety Structures, Systems, and Components			Technical Safety Requirement	Derivation Basis
	Description	SC	SS		
Nuclear Criticality (5.3.2.1)	None required	None	None	SL: None required LCS: None required LCO: None required AC: 5.7 Nuclear Criticality Safety - Establish CPSs based on CSERs - For transfers into the tank farm (excluding 242-A Evaporator and caustic/water additions) limits on pH ≥ 8, neutron absorber to plutonium ratio > subcritical mass ratio, and plutonium concentration < 0.04 g/L averaged over the entire volume of the transferred waste - Independent verification of documented results - Recovery actions if limits exceeded - Criticality training program - MISF activities prohibited until waste characterized (gas monitoring and sampling allowed) - CSERs for all cross-site slurry transfers of tank wastes from tank to tank	AC 5.7 PREVENTIVE: Implementation of the controls identified in the Nuclear Criticality Safety program protects the assumptions in the accident analysis to prevent a criticality from occurring. The controls maintain k_{eff} <0.935 which ensures subcritical storage of waste in TWRS. This implements double contingency principles and prevents the initiation of a self-sustaining nuclear chain reaction (criticality). Criticality limits and controls are documented in CSERs and implemented in CPSs through procedures. Criticality safety training is provided and procedures identify the recovery actions in the event the CPS requirements are not met. For waste transfers into the tank farm, controls to prevent criticality are established on (1) pH ≥ 8, (2) plutonium concentration <0.04 g/L averaged over the entire volume of the waste transferred, (3) limits on neutron absorber to plutonium mass ratio are > the subcritical mass ratios. Compliance with the requirements may be demonstrated by sample analysis or calculation and demonstrated compliance is documented. Independent verification of documentation of these controls is performed. These controls do not restrict water and caustic additions to the tank farm and are not required for transfers within the tank farm but are only for transfers from outside the tank farm into the tank farm. For waste transfers where the plutonium concentration is ≤ 0.001 g/l the absorber to plutonium ratio is not required. This allowance is because most of the plutonium will remain in solution since the concentration is less than the plutonium solubility limit of 0.002 g/l. Restrictions on MISF activities where characterization of the waste has not been performed prevents a criticality. Gas monitoring and sampling are permitted. Transfers via the RCSTS which will intentionally transfer high solids contents will require characterization of the waste, and preparation of a CSER and CPS (if required) prior to initiating the transfer.

Table 6-1. Hazard and Accident Analyses; Safety Structures, Systems, and Components; and Technical Safety Requirement Cross Reference. (25 sheets)

Analyzed Accident/ BIO Section Reference	Safety Structures, Systems, and Components			Technical Safety Requirement	Derivation Basis
	Description	SC	SS		
HEPA Filter Failure-Exposure to High Temperature or Pressure (5.3.2.2)	Ventilation CAM interlock systems		X	SL: None required LCS: None required LCO: 3.1.4 Ventilation Stack CAM Interlock Systems AC: 5.18 HEPA Filter Controls - Periodic radiation surveillance - Replacement based on accumulation - Aerosol test upon installation (AWF 241-AZ-702) - Periodic aerosol test (AWF-241-AZ-702)	LCO 3.1.4 MITIGATIVE: The ventilation CAM interlock detects increasing radiological effluent releases and stops the ventilation exhaust fan on DSTs, AWF tanks, and actively ventilated SSTs (C and SX tank farms) within 10 minutes. Stopping the exhaust fan protects against the continued unfiltered release of radioactive and toxic materials following the breach of the filter. AC 5.18 MITIGATIVE: HEPA filter and pre-filter monitoring and replacement ($\leq$ 200 mrem/hr), HEME (for AWF tanks using 241-AZ-702) monitoring and replacement ($\leq$ 800 mrem/hr), and HEGA filter (for AWF tanks using 241-AZ-702) replacement protect against exceeding the source term assumptions in the analysis by limiting the accumulation on the filter and thereby limiting inventory available for release. Efficiency testing of the HEPA filter upstream of the HEGA filter (for AWF tanks using 241-AZ-702) protects the HEGA filter source term assumption in the analysis.
Fire in Contaminated Area (5.3.2.3)	None required	None	None	SL: None required LCS: None required LCO: None required AC: 5.10 Ignition Controls - Vehicle fuel system protection required within tank farm boundary - Physical barriers around tank farm aboveground structures outside the tank farm boundary. Vehicles with fuel system protection can access inside the barrier - Speed limit controls AC: 5.14 Emergency Preparedness - Response procedures	AC 5.10 PREVENTIVE: Vehicle access controls which prohibit vehicles without fuel system protection from entering the tank farms and physical barriers (i.e., chain-link fencing, metal interlocking rail systems, concrete or concrete filled piping posts, concrete barriers, or T-posts connected with chain) around tank farm aboveground structures outside the tank farms prevent the rupture of a vehicle fuel system which may result in a fire in a contaminated area (e.g., open pit). Vehicles with protected fuel systems are allowed access inside the barriers. Vehicle fuel system protection ensures the integrity of the fuel systems is maintained. Speed limit controls minimize the potential of a vehicle accident. AC 5.14 MITIGATIVE: In the event that a fire occurs, emergency response procedures mitigate the consequences by providing direction for fire response and recovery activities.
Evaporator Dump (5.3.2.4)	None required	None	None	SL: None required LCS: None required LCO: None required AC: None required	The unmitigated offsite and onsite radiological and toxicological dose consequences are below the risk guidelines so no controls are required to prevent or mitigate the accident scenario or protect the offsite public, onsite worker or facility worker.

Table 6-1. Hazard and Accident Analyses; Safety Structures, Systems, and Components; and Technical Safety Requirement Cross Reference. (25 sheets)

Analyzed Accident/ BIO Section Reference	Safety Structures, Systems, and Components			Technical Safety Requirement	Derivation Basis
	Description	SC	SS		
Steam Intrusion From Interfacing Systems (5.3.2.5)	None Required	None	None	SL: None required LCS: None required LCO: None required AC: 5.18 HEPA Filter Controls - Periodic radiation surveillance - Replacement Based on accumulation - Aerosol test upon installation (AWF 241-AZ-702) - Periodic aerosol test (AWF 241-AZ-702)	AC 5.18 MITIGATIVE: HEPA filter and pre-filter monitoring and replacement (≤ 200 mrem/hr), HEME (for AWF tanks using 241-AZ-702) monitoring and replacement (≤ 800 mrem/hr), and HEGA filter (for AWF tanks using 241-AZ-702) replacement protect against exceeding the source term assumptions in the analysis by limiting inventory available for release. Efficiency testing of the HEPA filter upstream of the HEGA filter (for AWF tanks using 241-AZ-702) protects the HEGA filter source term assumption in the analysis.
Leak from Railcar/ Tank Trailer (5.3.2.6)	None required	None	None	SL: None required LCS: None required LCO: None required AC: 5.8 Source Inventory Controls - Source term inventory limits for railcars and tank trailers shall comply with the safety analysis for packaging. Control also ensures nonflammable and thermally stable	AC 5.8 MITIGATIVE Requirements for waste transported by railcar are established in WHC-SD-RE-SAP-013, Safety Analysis Report for Packaging, Railroad Liquid Waste Tank Cars and for waste transported by tank trailer in WHC-SD-TP-SEP-011, Safety Evaluation for Packaging for the 222-S Laboratory Cargo Tank, 49 CFR Parts 173.403, 173.425, and 173.435. Control of radioactive and chemical concentrations, volumes, nonflammability and thermal stability to meet requirements in the existing SARP and SEP protects source term assumptions in the analysis. Although this control does not prevent a leak from occurring, the limits do prevent a release from exceeding risk evaluation guidelines in the event of a leak.

Table 6-1. Hazard and Accident Analyses; Safety Structures, Systems, and Components; and Technical Safety Requirement Cross Reference. (25 sheets)

Analyzed Accident/ BIO Section Reference	Safety Structures, Systems, and Components			Technical Safety Requirement	Derivation Basis
	Description	SC	SS		
Subsurface Leak Remaining Subsurface (5.3.2.7)	Transfer leak detection systems Pipe encasements Tank level detection systems Salt well flow totalizers		X X X X	SL: None required LCS: None required LCO: 3.1.3 Transfer Leak Detection Systems AC: 5.12 Transfer Controls - Material Balance - Single-walled direct buried/ bermed line surveillance during waste transfers (once per 12 hours for salt well pumping and once per 30 minutes for submersible pumping) - Configuration management - Independent route verification during transfer setup - Monitor interconnected tanks for level increase - Double valve isolation on interconnected lines - Aboveground labeling of single-walled direct buried/ bermed pipe locations (also AC 5.17) AC: 5.20 Transfer pump administrative lock controls	LCO 3.1.3 MITIGATIVE: Waste transfer leakage detection systems provide for collection and detection of leakage in the waste transfer piping systems and associated structures. Upon detection, actions can be taken to minimize and terminate a leak. These controls provide facility worker protection. AC 5.12 PREVENTIVE/MITIGATIVE: Performing a material balance during waste transfers identifies discrepancies in the amount of material transferred which indicates a potential leak or misrouting. Single-walled direct buried/bermed piping does not have an installed leakage detection system. Labeling the location of the piping and performing monitoring of the piping used during a transfer facilitates detection of a high radiation area caused by a subsurface leak such that action can be taken to minimize and terminate the leak. The independent verification of the selected transfer path, double valve isolation on interconnected lines, and configuration management of the alignment of the jumpers and valves used in the transfer help to prevent a misroute. Monitoring the tanks interconnected to the transfer route helps to detect any misroutes or leakage. AC 5.20 PREVENTIVE: Placing an administrative lock on an active transfer pump that is physically connected to a waste transfer system, minimizes the potential for an inadvertent pump start that could result in the unplanned transfer of waste. ENCASEMENTS MITIGATIVE: Concrete encasements and pipe-in-pipe encasements contain leakage from the primary pipe which minimizes the release of waste to the soil and directs the leakage to a collection point for detection and subsequent action.
Unplanned Excavation/Drilling in Crib/Ditch/Pond (5.3.2.8)	None required	None	None	SL: None required LCS: None required LCO: None required AC: None required	The unmitigated offsite and onsite radiological and toxicological dose consequences are below the risk guidelines so no controls are required to prevent or mitigate the accident scenario or protect the offsite public, onsite worker or facility worker.

Table 6-1. Hazard and Accident Analyses; Safety Structures, Systems, and Components; and Technical Safety Requirement Cross Reference. (25 sheets)

Analyzed Accident/ BIO Section Reference	Safety Structures, Systems, and Components			Technical Safety Requirement	Derivation Basis
	Description	SC	SS		
Caustic Spray Leak (5.3.2.9)	None required	None	None	SL: None required LCS: None required LCO: None required AC: 5.23 Caustic Transfer Controls - Sleeving around delivery piping - Pipeline transfer pressure ≤ 125 psig - Schedule 10 or heavier thickness for steel pipe	AC 5.23 PREVENTIVE/MITIGATIVE: TSR controls are established for polyethylene (or similar) sleeving around delivery piping, limitations of the caustic delivery system pressure to ≤ 125 psi, and use of Schedule 10 as a minimum thickness for caustic delivery if steel pipe is used.
Sodium Fire (5.3.2.10)	2727 W Building		X	SL: None required LCS: None required LCO: None required AC: None required	The unmitigated offsite and onsite radiological and toxicological dose consequences are below the risk guidelines so no controls are required to prevent or mitigate the accident scenario or protect the offsite public, onsite worker or facility worker. However an additional control was selected. 2727-W BUILDING PREVENTIVE: The 2727-W Building structure design prevents the sodium fire from occurring. The building protects the contents of the building from a vehicle crash that could lead to a fire. The building structure also protects the source term in the building from dispersal caused by high winds.
Mixing of Incompatible Material—Toxic Vapor Generation (5.3.2.11)	None required	None	None	SL: None required LCS: None required LCO: None required AC: None required	The unmitigated offsite and onsite radiological and toxicological dose consequences are below the risk guidelines so no controls are required to prevent or mitigate the accident scenario or protect the offsite public, onsite worker or facility worker.
Mixing of Incompatible Material—Tank Pressurization (5.3.2.12)	HEPA filters (one stage required on 244-S, 244-TX, and 244-A)		X	SL: None required LCS: None required LCO: None required AC: 5.12 Transfer Controls - Compatibility evaluation for pH ≥ 8 before transfer into tank farm (excluding water transfers and caustic additions) AC: 5.18 HEPA Filter Controls - Aerosol test upon installation - Periodic aerosol test	AC 5.12 PREVENTIVE: Transfer controls that evaluate planned transfers from Process Facilities to DCRTs 244S, 244TX, and 244A to verify only transfer of compatible material, prevents an energetic chemical reaction from occurring that will release waste through the operating ventilation system. These controls are also for large transfers into DSTs via a tank truck and 204-AR. (AC 5.7 also has pH controls). AC 5.18 MITIGATIVE: A conservative assumption in the analysis is the ventilation system continues to operate. Requiring one stage of HEPA filters be installed on DCRTs 244-S, 244-TX and 244-A with a demonstrated efficiency mitigates the consequences of a release to protect the onsite worker and facility worker.

Table 6-1. Hazard and Accident Analyses; Safety Structures, Systems, and Components; and Technical Safety Requirement Cross Reference. (25 sheets)

Analyzed Accident/ BIO Section Reference	Safety Structures, Systems, and Components			Technical Safety Requirement	Derivation Basis
	Description	SC	SS		
Tank Failure Due to Excessive Loads (5.3.2.13)	None required	None	None	SL: None required LCS: None required LCO: None required AC: 5.16 Dome Loading Controls - Limits on load height - Hanford Site Hoisting and Rigging Manual for critical lifts - Uniform and Concentrated load limits	AC 5.16 PREVENTIVE: Limiting the height that a load can be lifted to ≤ 20 ft prevents the force of a dropped load from damaging a waste retaining structure which can result in the release of radioactive or toxic material. This control reduces the frequency of occurrence for the event. The Hanford Site Hoisting and Rigging Manual, DOE-RL-92-36, provides requirements for lifts in the tank farm. This control specifically applies to hoisting operations that could either affect (1) facilities with radionuclide inventories greater than Hazard Category 2 threshold inventories in DOE-STD-1027-92 or (2) safety SSCs. The manual ensures lift controls are in place for loads to minimize the potential for a load damaging a waste retaining structure that can result in an uncontrolled release. Controls for uniform and concentrated loads protects against excessive concentrated or uniform loads over the tank dome thereby preventing a potential tank failure. The controls either limit the load to that existing or specify a soil depth for uniform loads or a weight limit in tons for a concentrated load. Tank failure caused by vacuum or degradation is bounded by tank failure caused by excessive loads. Therefore the controls previously identified to prevent tank failure caused by excessive loads are adequate to prevent a tank failure caused by vacuum or degradation.

Table 6-1. Hazard and Accident Analyses; Safety Structures, Systems, and Components; and Technical Safety Requirement Cross Reference. (25 sheets)

Analyzed Accident/ BIO Section Reference	Safety Structures, Systems, and Components			Technical Safety Requirement	Derivation Basis
	Description	SC	SS		
Flammable Gas Deflagrations (5.3.2.14)	DST/AWF ventilation	X		SL: None required LCS: None required LCO: 3.2.1 DST and AWF Tank Ventilation Systems LCO: 3.2.2 SST Ventilation Systems - Active LCO: 3.2.3 SST Ventilation Systems - Passive LCO: 3.2.4 DCRT Ventilation Systems LCO: 3.2.5 244-AR TK-002 Ventilation System LCO: 3.2.6 Primary Tank Leak Detection Systems AC: 5.9 Flammability Controls - SY-101 tank controls AC: 5.10 Ignition Controls - Controls on sparking - Controls on electrostatic ignition sources - Polymer material controls - Surface temperature for equipment contacting waste - NFPA 70 Class I Division 1 and 2 requirements - Purged and pressurized equipment controls (shutdown, alarming, interlocked start-up, automatic start-up, and manual start-up)	LCO 3.2.1 PREVENTIVE: On DSTs and AWF tanks, active ventilation system operation prevents a steady state flammable gas accumulation from reaching the lower flammability limit. LCO 3.2.2 PREVENTIVE: On SSTs, active ventilation system operation prevents a steady state flammable gas accumulation from reaching the lower flammability limit. LCO 3.2.3 PREVENTIVE: For SSTs without active ventilation systems, the HEPA breather filter isolation valve being open prevents a steady state flammable gas accumulation from reaching the LFL. LCO 3.2.4 PREVENTIVE: For DCRTs, the air purge through the dip tubes prevents a steady state flammable gas accumulation from reaching the LFL. LCO 3.2.5 PREVENTIVE: For 244-AR TK-002, the air purge through the dip tubes prevents a steady state flammable gas accumulation from reaching the LFL.
	Primary tank leak detection systems	X			
	SST ventilation	X			
	DCRT level dip tube flow	X			
	TK-002 244-AR level dip tube flow	X			
	Tank 241-SY-101 mixer pump	X			
	Tank 241-SY-101 hydrogen monitor	X			
	Tank 241-SY-101 level monitoring system	X			
	Tank 241-SY-101 pressure monitoring system	X			
	Tank 241-SY-101 ventilation flowmeter	X			

Table 6-1. Hazard and Accident Analyses; Safety Structures, Systems, and Components; and Technical Safety Requirement Cross Reference. (25 sheets)

Analyzed Accident/ BIO Section Reference	Safety Structures, Systems, and Components			Technical Safety Requirement	Derivation Basis
	Description	SC	SS		
Flammable Gas Deflagrations (continued) (5.3.2.14)	Tank 241-SY-101 ammonia detection systems Tank 241-SY-101 temperature monitoring systems	X X		AC: 5.11 Flammable Gas Monitoring Controls - Manned work activity - Unmanned operations AC: 5.17 Excavation Controls AC: 5.18 HEPA Filter Controls - Periodic radiation surveillance - Replacement based on accumulation - Aerosol test upon installation (AWF 241-AZ-702) - Periodic aerosol test (AWF 241-AZ-702)	LCO 3.2.6 MITIGATIVE: The primary tank leak detection system (conductivity probes or CAMs) provides indication of leakage in the annulus so action can be taken to prevent the steady state flammable gas accumulation from reaching the LFL. AC 5.9 PREVENTIVE: Tank 241-SY-101 controls are in accordance with LANL requirements to control the potential for flammable gas deflagrations. AC 5.10 PREVENTIVE: Limiting the available ignition sources reduces the potential of a deflagration if the concentration of flammable gas was at the LFL. Controls prevent local waste heatup which could lead to dryout and potential ignition of an organic salt-nitrate reaction, organic solvent fire, or flammable gas deflagration. AC 5.11 PREVENTIVE: Flammable gas monitoring before and during manned work activities ensures that flammable conditions are not present in the work space caused by steady state accumulation of flammable gas or as a result of a recent gas release event. For unmanned operations, ignition source controls generally provide sufficient protection. However continued monitoring is required for global waste disturbing operations in passively ventilated tanks if LFL is ≥ 25%. AC 5.17 EXCAVATION CONTROLS: Controls prevent ignition of flammable gases by reducing the likelihood of inadvertently intruding any structure potentially containing flammable gas. AC 5.18 MITIGATIVE: HEPA filter and pre-filter monitoring and replacement (≤ 200 mrem/h), HEME (for AWF tanks using 241-AZ-702) monitoring and replacement (≤ 800 mrem/h), and HEGA filter (for AWF tanks using 241-AZ-702) replacement protect against exceeding the source term assumptions in the analysis by limiting the accumulation on the filter and thereby limiting inventory available for release.

Table 6-1. Hazard and Accident Analyses; Safety Structures, Systems, and Components; and Technical Safety Requirement Cross Reference. (25 sheets)

Analyzed Accident/ BIO Section Reference	Safety Structures, Systems, and Components			Technical Safety Requirement	Derivation Basis
	Description	SC	SS		
Flammable Gas Deflagrations (continued) (5.3.2.14)					Efficiency testing of the HEPA filter upstream of the HEGA filter (for AWF tanks using 241-AZ-702) protects the HEGA filter source term assumption in the analysis.
Organic Solvent Fire (5.3.2.15)	None required	None	None	SL: None required LCS: None required LCO: None required AC: 5.10 Ignition Controls - Stop all intrusive work when lightning is detected within 50 mi - Secure elevated equipment in lowest position when lightning is detected within 50 mi - Barrier for hot metal is required for flame cutting - Vehicle fuel system protection required within tank farm boundary - Physical barriers around tank farm aboveground structures outside the tank farm boundary. Vehicles with fuel system protection can access inside the barrier - Speed limit controls - Rotary Mode Core Sampling is permitted only per approved Authorization Basis AC: 5.12 Transfer Controls - Evaluate organic solvent transfers to ensure final state of receiving tank remains within BIO safety envelope AC: 5.14 Emergency Preparedness - Response procedures AC: 5.18 HEPA Filter Controls - Periodic radiation surveillance - Replacement based on accumulation - Aerosol test upon installation (AWF 241-AZ-702) - Periodic aerosol test (AWF 241-AZ-702)	AC 5.10 PREVENTIVE: Ignition controls minimize initiators (lightning, hot metal barrier, vehicle fuel fire) with sufficient energy to ignite an organic solvent fire. Stopping tank activities and securing elevated equipment (e.g., cranes) in a low position when lightning has been identified within 50 mi, minimizes the potential for a lightning strike to occur that could ignite the organic solvents. If flame cutting is performed in a location where debris from the cutting could fall on the waste surface of an organic solvent tank, a device that catches and contains hot metal debris shall be inserted between the cutting operation and waste surface to prevent a hot metal piece from falling in the waste surface and igniting a fire. Vehicle access controls which prohibit vehicles without fuel system protection from entering the tank farms and physical barriers (i.e., chain-link fencing, metal interlocking rail systems, concrete or concrete filled piping posts, concrete barriers, or T-posts connected with chain) around tank farm aboveground structures outside the tank farms prevent the rupture of a vehicle fuel system which may result in a fire in an organic solvent tank. Vehicles with protected fuel systems are allowed access inside the barriers. Vehicle fuel system protection ensures the integrity of the fuel systems is maintained. Speed limit controls minimize the potential of a vehicle accident. Rotary mode core sampling controls are only permitted in accordance with other approved Authorization Basis (e.g., WHC-SD-WM-SAD-035). Controls prevent local waste heatup which could lead to dryout and potential ignition of an organic salt-nitrate reaction, organic solvent fire, or flammable gas deflagration. AC 5.12 PREVENTIVE: Transfer controls to evaluate organic solvent transfers, restricts transfers to nonorganic tanks unless necessary. This prevents the organic solvent fire potential being applicable to new tanks.

Table 6-1. Hazard and Accident Analyses; Safety Structures, Systems, and Components; and Technical Safety Requirement Cross Reference. (25 sheets)

Analyzed Accident/ BIO Section Reference	Safety Structures, Systems, and Components			Technical Safety Requirement	Derivation Basis
	Description	SC	SS		
Organic Solvent Fire (continued) (5.3.2.15)					AC 5.14 MITIGATIVE: In the event that a fire occurs, emergency response procedures mitigate the consequences by providing direction for fire response and recovery activities. AC 5.18 MITIGATIVE: HEPA filter and pre-filter monitoring and replacement ($\leq$ 200 mrem/hr), HEME (for AWF tanks using 241-AZ-702) monitoring and replacement ($\leq$ 800 mrem/hr), and HEGA filter (for AWF tanks using 241-AZ-702) replacement protect against exceeding the source term assumptions in the analysis by limiting the accumulation on the filter and thereby limiting the inventory available for release. Efficiency testing of the HEPA filter upstream of the HEGA filter (for AWF tanks using 241-AZ-702) protects the HEGA filter source term assumption in the analysis.
In-Tank Fuel Fire/ Deflagration (5.3.2.16)	None required	None	None	SL: None required LCS: None required LCO: None required AC: 5.10 Ignition Controls - Vehicle fuel system protection required within tank farm boundary - Physical barriers around tank farm aboveground structures outside the tank farm boundary; vehicles with fuel system protection can access inside the barrier - Speed limit controls AC: 5.14 Emergency Preparedness - Response procedures	AC 5.10 PREVENTIVE: Vehicle access controls which prohibit vehicles without fuel system protection from entering the tank farms and physical barriers (i.e., chain-link fencing, metal interlocking rail systems, concrete or concrete filled piping posts, concrete barriers, or T-posts connected with chain) around tank farm aboveground structures outside the tank farms prevent the rupture of a vehicle fuel system which may result in an in-tank fuel fire/deflagration. Vehicles with protected fuel systems are allowed access inside the barriers. Vehicle fuel system protection ensures the integrity of the fuel systems is maintained. Speed limit controls minimize the potential of a vehicle accident. AC 5.14 MITIGATIVE: In the event that a fire occurs, emergency response procedures mitigate the consequences by providing direction for fire response and recovery activities.

Table 6-1. Hazard and Accident Analyses; Safety Structures, Systems, and Components; and Technical Safety Requirement Cross Reference. (25 sheets)

Analyzed Accident/ BIO Section Reference	Safety Structures, Systems, and Components			Technical Safety Requirement	Derivation Basis
	Description	SC	SS		
Organic Salt-Nitrate Reaction (5.3.2.17)	Temperature monitoring systems		X	SL: Waste temperature LCS/LCO:3.3.1 SST Waste Temperature Controls LCS/LCO:3.3.2 DST and AWF Tank Waste Temperature Controls AC: 5.10 Ignition Controls - Stop all intrusive work when lightning is detected within 50 mi - Secure elevated equipment in lowest position when lightning is detected within 50 mi - Barrier for hot metal/slag is required for flame cutting - Vehicle fuel system protection required within tank farm boundary - Physical barriers around tank farm aboveground structures outside the tank farm boundary; vehicles with fuel system protection can access inside the barrier - Speed limit controls - Rotary Mode Core Sampling is permitted only per approved Authorization Basis - Use of catch device when involved with intrusive activities and high heat source (e.g., for hot lighting filaments) - All flammable gas ignition controls in respective tank is in flammable gas topography AC: 5.14 Emergency Preparedness - Response procedures AC: 5.15 Moisture Controls - Interim stabilization (supernate and salt well pumping controls) - Moisture monitoring - SST ventilation system changes - Emergency pumping	LCO 3.3.1 PREVENTIVE: The temperature monitoring system provides information on waste temperature so that actions can be taken to prevent exceeding temperatures at which an organic salt-nitrate reaction can occur. In SSTs the waste temperatures shall be <205 °F which protects the tank bump accident analysis assumption of ≤ 220 °F and accounts for instrument uncertainty and surveillance intervals. LCO 3.3.2 PREVENTIVE: The temperature monitoring system provides information on waste temperature so that actions can be taken to prevent exceeding temperatures at which an organic salt-nitrate reaction can occur. In DSTs and AWF tanks the waste temperature for any level in the waste shall be ≤ 195 °F OR from the surface to 15 ft below the surface the temperature shall be ≤ 195 °F and shall be ≤ 215 °F for waste from the bottom of the tank to 15 ft below the waste surface. The TSR waste temperature limits protect the tank bump accident analysis temperature assumptions of ≤ 220 °F and ≤ 240 °F and accounts for instrument uncertainty and surveillance intervals. AC 5.10 PREVENTIVE: Ignition controls minimize initiators (lightning, hot metal/slag barrier, vehicle fuel fire, top hats, rotary mode core sampling restrictions) with sufficient energy to ignite an organic salt-nitrate reaction with sufficient energy to ignite an organic salt-nitrate reaction. Stopping tank activities and securing elevated equipment (e.g., cranes) in a low position when lightning has been identified within 50 mi, minimizes the potential for a lightning strike to occur that could ignite the organic salt-nitrate reaction. If flame cutting is performed in a location where debris from the cutting could fall on the waste surface of an organic salt-nitrate tank or if there are high heat sources around the waste (light filament), a device that catches and contains hot metal debris shall be inserted between the activity and waste surface to prevent a hot metal piece from falling in the waste surface and igniting a fire. AC 5.14 MITIGATIVE: In the event that a fire occurs, emergency response procedures mitigate the consequences by providing direction for fire response and recovery activities.

Table 6-1. Hazard and Accident Analyses; Safety Structures, Systems, and Components; and Technical Safety Requirement Cross Reference. (25 sheets)

Analyzed Accident/ BIO Section Reference	Safety Structures, Systems, and Components			Technical Safety Requirement	Derivation Basis
	Description	SC	SS		
Organic Salt-Nitrate Reaction (continued) (5.3.2.17)				AC: 5.18 HEPA Filter Controls - Periodic radiation surveillance - Replacement based on accumulation - Aerosol test upon installation (AWF 241-AZ-702) - Periodic aerosol test (AWF 241-AZ-702) AC: 5.19 Process Instrumentation and measuring and test equipment	AC 5.15 PREVENTIVE: Moisture controls ensure that tanks which are moist tanks continue to have liquid levels near the top of the waste. Also evaluation of any changes in SST ventilation system design or operation that may cause increased tank moisture loss minimizes the potential for organic salt-nitrate reaction. Salt well pumping is prohibited unless post pumped condition of remaining waste meets the preliminary safety criteria for organic salt-nitrate reactions. Emergency pumping for leaks shall be limited to pumping supernate above the level of the solid waste. AC 5.18 MITIGATIVE: HEPA filter and pre-filter monitoring and replacement (≤ 200 mrem/hr), HEME (for AWF tanks using 241-AZ-702) monitoring and replacement (≤ 800 mrem/hr), and HEGA filter (for AWF tanks using 241-AZ-702) replacement protect against exceeding the source term assumptions in the analysis by limiting the accumulation on the filter and thereby limiting inventory available for release. Efficiency testing of the HEPA filter upstream of the HEGA filter (for AWF tanks using 241-AZ-702) protects the HEGA filter source term assumptions in the analysis. AC 5.19 PREVENTIVE: The process instrumentation and measuring and test equipment controls provide requirements for the instrumentation used to monitor the temperature in accordance with LCO 3.3.1 and LCO 3.3.2.

Table 6-1. Hazard and Accident Analyses; Safety Structures, Systems, and Components; and Technical Safety Requirement Cross Reference. (25 sheets)

Analyzed Accident/ BIO Section Reference	Safety Structures, Systems, and Components			Technical Safety Requirement	Derivation Basis
	Description	SC	SS		
Surface Leak Resulting in Pool (5.3.2.18)	Transfer leak detection systems	X		SL: None required LCS: None required LCO: 3.1.1 Transfer System Covers and Entry Doors LCO: 3.1.2 Service Water Pressure Detection Systems LCO: 3.1.3 Transfer Leak Detection Systems LCO: 3.1.5 Replacement Cross-Site Transfer System PRV and Rupture Disk (Reserved) LCO: 3.2.6 Primary Tank Leak Detection Systems AC: 5.12 Transfer Controls - Material balance - Monitor interconnected tanks for level increase - Double valve isolation on interconnected lines - Configuration management - Independent route verification during transfer setup - Use of concrete shielding system or vehicle restrictions around OGT lines - Jumper leak testing - Caps/blanks on open nozzles - Pit floor drains open on cross-site transfer route	LCO 3.1.1 MITIGATIVE: Covers and entry doors for transfer-associated structures mitigate releases of hazardous material when transferring waste by stopping a leak from aerosolizing outside the transfer-associated structures. LCO 3.1.2 PREVENTIVE: Flushing system pressure switches and associated interlocks with waste transfer pumps or alarm response are used to stop inadvertent waste flow into flushing systems in transfer-associated structures that do not have covers. This prevents potential leaks from developing outside the transfer path. The pressure switches and associated interlocks or alarm response also prevent radioactive material from contaminating the service water supply system or the RCSTS water flush tank. LCO 3.1.3 MITIGATIVE: The leak detection systems detect leaks from the primary waste transfer system piping and either automatically stops the waste transfer or provides an alarm to initiate operator action. Stopping the transfer when a leak is detected minimizes the potential consequences from a continued leak. LCO 3.1.5 PREVENTIVE: (Reserved) The RCSTS pressure relief valves and rupture disks located in 244-A provide protection from overpressurization for the tank farm transfer systems downstream of the RCSTS. (Note: LCO 3.1.5 will be added to the TSR document after RL approval for transfers through line WT-SLL-3160 is granted).
	Primary tank leak detection systems	X			
	Pressure switch interlocks or alarms (water service lines)	X			
	OGT encasement and connections	X			
	OGT concrete shielding system	X			
	Tank level detection systems		X		
	Transfer system supplemental covers	X			

Table 6-1. Hazard and Accident Analyses; Safety Structures, Systems, and Components; and Technical Safety Requirement Cross Reference. (25 sheets)

Analyzed Accident/ BIO Section Reference	Safety Structures, Systems, and Components			Technical Safety Requirement	Derivation Basis
	Description	SC	SS		
Surface Leak Resulting in Pool (continued) (5.3.2.18)	Salt well flow totalizers		X	AC: 5.13 Encasement Seal Loop Controls - Encasement drain line valve not closed AC: 5.18 HEPA Filter Controls - Periodic radiation surveillance - Replacement based on accumulation AC: 5.14 Emergency Preparedness - Response procedures AC: 5.20 Transfer pump administrative lock controls AC: 5.21 Tank service water intrusion monitoring program AC: 5.22 Transfer system cover removal controls Transfer System Supplemental Cover JCO (Wagoner 1998 and HNF-2296)	LCO 3.2.6 MITIGATIVE: The primary tank leak detection system detects leakage in the annulus of the DSTs so action can be taken to terminate the leakage before it overflows and forms a surface pool. AC 5.12 MITIGATIVE: Performing a material balance during waste transfers identifies discrepancies in the amount of material transferred which indicates a potential leak or misrouting. The independent verification of the selected transfer path and configuration management of the alignment of the jumpers and valves used in the transfer help to prevent a misroute. Monitoring the tanks interconnected to the transfer route helps to detect any misroutes or leakage. Use of the concrete shielding system or vehicle restrictions around the OGT lines are used to protect the OGT lines from external events such as a vehicle accident that may damage the transfer line and result in a leak. Double valve isolation on lines interconnecting with the transfer route when a transfer cover is off or entry door is open, provides compensatory protection to prevent a leak in this area when the cover or entry door which mitigates the leak is unavailable. The leak test when jumpers are installed ensures proper installation to prevent a misalignment of the jumper or prevent the jumper from falling off during a transfer resulting in a leak. Ensuring either a cap or blank is installed on open nozzles and that the pit floor drains are open on the cross-site transfer route prevents an overflow which may be associated with a misrouting. TRANSFER SYSTEM SUPPLEMENTAL COVER JCO: Transfer system supplemental cover controls ensure that pits physically connected to the transfer route are covered during transfer.
	Transfer system covers	X			
	RCSTS Entry doors (diversion box and vent station)		X		
	RCSTS Diversion box and vent station emergency pumpout line, air sample line, liner washdown system, and exhauster hookup		X		
	RCSTS Inlet air HEPA filter system (one stage on 6241-A and 6241-V)		X		
	RCSTS Pressure relief valve (244-A lift station)	X			
	RCSTS Rupture Disk (244-A lift station)	X			
	Service water flow totalizers	X			

Table 6-1. Hazard and Accident Analyses; Safety Structures, Systems, and Components; and Technical Safety Requirement Cross Reference. (25 sheets)

Analyzed Accident/ BIO Section Reference	Safety Structures, Systems, and Components			Technical Safety Requirement	Derivation Basis
	Description	SC	SS		
Surface Leak Resulting in Pool (continued) (5.3.2.18)					AC 5.13 MITIGATIVE: Verifying that there is an open drain path to the pit prevents the encasement pipe from pressurizing and filling with waste should the primary line leak because it allows encasement drainage. Also it ensures that leakage from the primary pipe drain back to a pit where leakage can be detected by the transfer system leak detection system. AC 5.14 MITIGATIVE: In the event that a leak occurs, emergency response procedures provide direction to minimize the consequences of the leak and to implement recovery activities. AC 5.18 MITIGATIVE: HEPA filter monitoring and replacement ($\leq$ 200 mrem/hr) for the RCSTS protects against exceeding the source term assumption in the analysis by limiting the accumulation on the filter and thereby limiting inventory available for release. Requiring the RCSTS inlet air HEPA filter system in diversion box 6241-A and vent station 6241-V to have a demonstrated efficiency mitigates the consequences of a release, protecting the onsite worker and facility worker. AC 5.20 PREVENTIVE: Placing an administrative lock on an active transfer pump that is physically connected to a waste transfer system, minimizes the potential for an inadvertent pump start that could result in the unplanned transfer of waste. AC 5.21 MITIGATIVE: The tank service water intrusion monitoring program is used to provide indication of service water leaks having the potential to cause tank intrusion. Service water flow totalizer monitoring or the tank level detection system provides alternate means of indicating service water intrusion. AC 5.22 MITIGATIVE: The transfer system cover removal controls provide compensatory measures for cover removal during waste transfers.

Table 6-1. Hazard and Accident Analyses; Safety Structures, Systems, and Components; and Technical Safety Requirement Cross Reference. (25 sheets)

Analyzed Accident/ BIO Section Reference	Safety Structures, Systems, and Components			Technical Safety Requirement	Derivation Basis
	Description	SC	SS		
Surface Leak Resulting in Pool (continued) (5.3.2.18)					ENCASEMENTS MITIGATIVE: OGT concrete encasements and pipe-in-pipe encasements direct leakage from the primary pipe to a collection point for detection and subsequent action which minimizes the release of waste to the atmosphere.
Subsurface Leak Resulting in Pool (5.3.2.19)	Pipe encasements Tank level detection systems Salt well flow totalizers RCSTS Pressure relief valve (244-A lift station) RCSTS Rupture Disk (244-A lift station) RCSTS Transfer Leak Detection Systems	X X X X	 X X 	SL: None required LCS: None required LCO: 3.1.3 Transfer Leak Detection Systems LCO: 3.1.5 Replacement Cross-Site Transfer System PRV and Rupture Disk (Reserved) AC: 5.12 Transfer Controls - Material Balance - Single-walled direct buried/ bermed line surveillance during waste transfers (once per 12 hours for salt well pumping and once per 30 minutes for submersible pumping) - Configuration management - Independent route verification during transfer setup - Monitor interconnected tanks for level increase - Double valve isolation on interconnected lines AC: 5.13 Encasement Seal Loop Controls - Valve not closed AC: 5.14 Emergency Preparedness - Response procedures	LCO 3.1.3 MITIGATIVE The safety functions of the RCSTS transfer leak detection system are to detect the presence of waste transfer system leaks in the waste transfer associated structures, and to either provide an alarm to initiate operator action or provide an interlock to shut down transfer pump operation, thus limiting the amount of waste leaked and decreasing the consequences of the subsurface leak. LCO 3.1.5 PREVENTIVE: (Reserved) The RCSTS pressure relief valves and rupture disks located in 244-A provide protection from overpressurization for the tank farm transfer systems downstream of the RCSTS. (Note: LCO 3.1.5 will be added to the TSR document after RL approval for transfers through line WT-SLL-3160 is granted). AC 5.12 MITIGATIVE: The transfer control program detects leaks so action can be taken to minimize the potential consequences from a continued leak. Performing a material balance during waste transfers identifies discrepancies in the amount of material transferred which indicates a potential leak or misrouting. Single-walled direct buried/bermed piping does not have an installed leakage detection system. Performing monitoring of the piping used during a transfer facilitates detection of a high radiation area caused by a subsurface leak such that action can be taken to minimize and terminate the leak. Independent verification of the transfer path, double valve isolation on interconnected lines, and configuration management of the alignment of the jumpers and valves used in the transfer helps to prevent a misroute. Monitoring the tanks interconnected to the transfer route helps to detect any misroutes or leakage. AC 5.13 MITIGATIVE: Verifying the encasement drain line valve (i.e., encasement pneumatic test valve) is not closed prevents the encasement pipe from pressurizing and filling with waste should the primary line leak because it allows encasement drainage.

Table 6-1. Hazard and Accident Analyses; Safety Structures, Systems, and Components; and Technical Safety Requirement Cross Reference. (25 sheets)

Analyzed Accident/ BIO Section Reference	Safety Structures, Systems, and Components			Technical Safety Requirement	Derivation Basis
	Description	SC	SS		
Subsurface Leak Resulting in Pool (Continued) (5.3.2.19)					AC 5.14 MITIGATIVE: In the event that a leak occurs, emergency response procedures provide direction to minimize the consequences of the leak and to implement recovery activities. ENCASEMENTS MITIGATIVE: Concrete encasements and pipe-in-pipe encasements direct leakage from the primary pipe to a collection point for detection and subsequent action which minimizes the release of waste to the soil.

Table 6-1. Hazard and Accident Analyses; Safety Structures, Systems, and Components; and Technical Safety Requirement Cross Reference. (25 sheets)

Analyzed Accident/ BIO Section Reference	Safety Structures, Systems, and Components			Technical Safety Requirement	Derivation Basis
	Description	SC	SS		
Spray Leak in Structure or from Overground Waste Transfer Line (5.3.2.20)	Transfer system covers	X		SL: None required LCS: None required LCO: 3.1.1 Transfer System Covers and Entry Doors LCO: 3.1.2 Service Water Pressure Detection Systems LCO: 3.1.4 Ventilation Stack CAM Interlock Systems LCO 3.1.5 Replacement Cross-Site Transfer System PRV and Rupture Disk (Reserved) AC: 5.12 Transfer Controls - Double valve isolation on interconnected lines - Configuration management - Independent route verification during transfer setup - Use of concrete shielding system or vehicle restrictions around OGT lines - Verify that the west exterior rollup door and the west exterior personnel access door are closed during waste transfers physically connected to the 204-AR Waste Unloading Facility	LCO 3.1.1 MITIGATIVE: Covers and entry doors for transfer-associated structures mitigate spray leak events when transferring waste by stopping a leak from aerosolizing outside the transfer-associated structures. LCO 3.1.2 PREVENTIVE: Flushing system pressure switches and associated interlocks with waste transfer pumps or alarm response are used to stop inadvertent waste flow into flushing systems in transfer-associated structures that do not have covers. This prevents potential leaks from developing outside the transfer path. The pressure switches and associated interlocks or alarm response also prevent radiological material from contaminating the service water supply system or the RCSTS water flush tank. LCO 3.1.4 MITIGATIVE: The ventilation CAM interlock detects increasing radiological effluent releases and stops the ventilation exhaust fan on DSTs, AWF tanks, actively ventilated SSTs (C and SX tank farms), DCRTs, and 204-AR Building. Stopping the exhaust fan protects against the continued unfiltered release of radiological and toxicological materials following the breach of the filter. LCO 3.1.5 PREVENTIVE: (Reserved) The RCSTS pressure relief valves and rupture disks located in 244-A provide protection from overpressurization for the tank farm transfer systems downstream of the RCSTS. (Note: LCO 3.1.5 will be added to the TSR document after RL approval for transfers through line WT-SLL-3160 is granted). AC 5.12 PREVENTIVE/MITIGATIVE: The independent verification of the selected transfer path and configuration management of the alignment of the jumpers and valves used in the transfer help to prevent a misroute. Monitoring the tanks interconnected to the transfer route helps to detect any misroutes or leakage. Use of the concrete shielding system or vehicle restrictions around the OGT lines are used to protect the OGT lines from external events such as a vehicle accident that may damage the transfer line and result in a leak.
	Ventilation CAM interlock systems	X			
	OGT encasement and connections	X			
	OGT concrete shielding system	X			
	204-AR Building including west exterior doors		X		
	Backflow prevention devices		X		
	RCSTS Pressure relief valve (244-A lift station)	X			
	RCSTS Rupture Disk (244-A lift station)	X			

Table 6-1. Hazard and Accident Analyses; Safety Structures, Systems, and Components; and Technical Safety Requirement Cross Reference. (25 sheets)

Analyzed Accident/ BIO Section Reference	Safety Structures, Systems, and Components			Technical Safety Requirement	Derivation Basis
	Description	SC	SS		
Spray Leak in Structure or from Overground Waste Transfer Line (continued) (5.3.2.20)	RCSTS Entry doors (diversion box and vent station) RCSTS Diversion box and vent station emergency pumpout line, air sample line, liner washdown system, and exhauster hookup RCSTS Inlet air HEPA filter system (one stage on 6241-A and 6241-V)	X X	 X	AC: 5.13 Encasement Seal Loop Controls - Encasement drain line valve not closed AC: 5.18 HEPA Filter Controls - Periodic radiation surveillance - Replacement based on accumulation AC: 5.20 Transfer pump administrative lock controls AC: 5.22 Transfer system cover removal controls	Double valve isolation on lines interconnecting with the transfer route when a transfer cover is off, provides compensatory protection to prevent a leak in this area when the cover which mitigates the leak is unavailable. Ensuring that the west exterior rollup door and west exterior personnel access door are closed during waste transfers physically connected to the 204-AR Waste Unloading Facility mitigates potential spray leaks inside the unloading area of the building. AC 5.13 PREVENTIVE: With the encasement seal loop valve not closed, it protects from pressurizing the encasement sufficiently to cause a spray leak. By the valve being at least partially open, the encasement can drain to a location where leakage can be detected. AC 5.18 MITIGATIVE HEPA filter monitoring and replacement ($\leq$ 200 mrem/hr) for the RCSTS protects against exceeding the source term assumption in the analysis by limiting the accumulation on the filter and thereby limiting inventory available for release. Requiring the RCSTS inlet air HEPA filter system in diversion box 6241-A and vent station 6241-V to have a demonstrated efficiency mitigates the consequences of a release, protecting the onsite worker and facility worker. AC 5.20 PREVENTIVE: Placing an administrative lock on an active transfer pump that is physically connected to a waste transfer system, minimizes the potential for an inadvertent pump start that could result in the unplanned transfer of waste. AC 5.22 MITIGATIVE: The transfer system cover removal controls provide compensatory measures for cover removal during waste transfers.

Table 6-1. Hazard and Accident Analyses; Safety Structures, Systems, and Components; and Technical Safety Requirement Cross Reference. (25 sheets)

Analyzed Accident/ BIO Section Reference	Safety Structures, Systems, and Components			Technical Safety Requirement	Derivation Basis
	Description	SC	SS		
Spray Leak from Underground Waste Transfer Lines (5.3.2.21)	None required	None	None	SL: None required LCS: None required LCO: None required AC: 5.17 Excavation Controls - Excavation permit including composite map, radiological evaluation, physical marking of the ground surface, activity approval, hand-digging limitations - Coordination of transfers with excavations and emergency response procedures - Aboveground labeling of buried active waste transfer lines outside the tank farm fences (also AC 5.12) - Restrictions on transfers through uncovered/excavated piping (prohibited or compensatory measures) - Waste transfers shall not be conducted in transfer lines located within approximately 15 ft of ongoing excavation activities	AC 5.17 PREVENTIVE/MITIGATIVE: The excavation controls provide requirements to prevent the excavation accident and also mitigate the accident if leakage is detected. Where active waste transfers can occur, the requirement for an excavation permit and coordination of the excavation activities minimizes the potential that an excavation activity which can damage the waste transfer line will occur in the vicinity of an ongoing waste transfer. The composite map for the excavation site, physically marking the ground surface, allowances for hand-digging only, and obtaining approval for the excavation activity ensures excavations are not inadvertently performed near active waste transfer lines. If an excavation activity damages a waste transfer line then the established communication system and emergency procedures provide the necessary notification and guidance to terminate the transfer, reduce potential exposure, and implement restoration activities. The requirement to monitor the waste transfer route verifies that no excavation activities are being conducted in the vicinity of active transfers. Aboveground labeling of the waste transfer line outside the tank farm fence provides visible indications of the waste transfer pipe location to prevent excavations that can damage the piping. Restriction on transfers through uncovered or excavated piping either prohibit the transfer or establish compensatory measures to minimize a potential release directly to atmosphere and to minimize worker radiation doses.

Table 6-1. Hazard and Accident Analyses; Safety Structures, Systems, and Components; and Technical Safety Requirement Cross Reference. (25 sheets)

Analyzed Accident/ BIO Section Reference	Safety Structures, Systems, and Components			Technical Safety Requirement	Derivation Basis
	Description	SC	SS		
Tank Bump (5.3.2.22)	Temperature monitoring systems Tank level detection systems		X X	SL: None required LCS: None required LCO: 3.3.1 SST Waste Temperature Controls LCO: 3.3.2 DST and AWF Tank Waste Temperature Controls AC: 5.12 Transfer Controls - Ensure final tank state within analyzed topography AC: 5.19 Process instrumentation and measuring and test equipment - Identification and calibrate	LCO 3.3.1 PREVENTIVE: The temperature monitoring system provides information on waste temperature so that actions can be taken to prevent exceeding temperatures at which a tank bump (or steam release event) can occur. In SSTs the waste temperatures shall be ≤ 205 °F which protects the accident analysis assumption of ≤ 220 °F and accounts for instrument uncertainty and surveillance intervals. Control also protects against a postulated "chemical runaway" accident (Organic Salt-Nitrate Reaction) LCO 3.3.2 PREVENTIVE: The temperature monitoring system provides information on waste temperature so that actions can be taken to prevent exceeding temperatures at which tank bump (or steam release event) can occur. In DSTs and AWF tanks the waste temperature for all level in the waste shall be ≤ 195 °F OR from the surface to 15 ft below the surface the temperature shall be ≤ 195 °F and shall be ≤ 215 °F for waste from the bottom of the tank to 15 ft below the waste surface. The TSR waste temperature limits protect the accident analysis temperature assumptions of ≤ 220 °F and ≤ 240 °F and accounts for instrument uncertainty and surveillance intervals. Control also protects against a postulated "chemical runaway" accident (Organic Salt-Nitrate Reaction) AC 5.12 PREVENTIVE: Transfer controls provide waste compatibility evaluations to ensure that controls are applied to the final state of pumped and receiving tanks prior to transfers. AC 5.19 PREVENTIVE: The process instrumentation and measuring and test equipment controls provide requirements for the instrumentation used to monitor the temperature in accordance with LCO 3.3.1 and LCO 3.3.2 and the level in LCO 3.3.2.

Table 6-1. Hazard and Accident Analyses; Safety Structures, Systems, and Components; and Technical Safety Requirement Cross Reference. (25 sheets)

Analyzed Accident/ BIO Section Reference	Safety Structures, Systems, and Components			Technical Safety Requirement	Derivation Basis
	Description	SC	SS		
Natural Phenomena - High Wind (5.3.2.23.1a) a. Waste Transport Vehicle Accident	None required	None	None	SL: None required LCS: None required LCO: None required AC: None Required	The packaging and transporting of waste is designed and licensed to meet requirements established by the US DOT. Part of these requirements are satisfied by the submittal of safety analyses that identify hazards and corresponding controls. Since the hazards associated with the transportation of waste were adequately addressed in existing safety analyses, they are considered outside the scope of the TWRS analyses. Where hazards are associated with an interface between a transport vehicle and a TWRS facility, these hazardous conditions have been addressed in the accident analysis (e.g., Leak from Railcar/Tank Trailer).
Natural Phenomena – High Wind (5.3.2.23.1b) b. Load Drop	None required	None	None	SL: None required LCS: None required LCO: None required AC: 5.16 Dome Loading Controls - Hanford Site Hoisting and Rigging Manual for critical lift	AC 5.16 PREVENTIVE: The Hanford Site Hoisting and Rigging Manual provides requirements for lifts in the tank farm which considers wind speed before starting a lift and prohibits lifts if weather conditions are adverse to safe load-handling operations. The manual also requires securing of the crane in accordance with manufacturer's recommendations when a local weather storm warning exists. This control specifically applies to hoisting operations that could either affect (1) facilities with radionuclide inventories greater than Hazard Category 2 threshold inventories in DOE-STD-1027-92 or (2) safety SSCs. The manual ensures lift controls are in place during high winds to minimize the potential for a load damaging a waste retaining structure that can result in an uncontrolled release.
Natural Phenomena - High Wind (5.3.2.23.1c) c. Aboveground Structure Failure	None required	None	None	SL: None required LCS: None required LCO: None required AC: None required	The unmitigated offsite and onsite radiological and toxicological dose consequences are below the risk guidelines so no controls are required to prevent or mitigate the accident scenario or protect the offsite public, onsite worker or facility worker.

Table 6-1. Hazard and Accident Analyses; Safety Structures, Systems, and Components; and Technical Safety Requirement Cross Reference. (25 sheets)

Analyzed Accident/ BIO Section Reference	Safety Structures, Systems, and Components			Technical Safety Requirement	Derivation Basis
	Description	SC	SS		
Natural Phenomena - Lightning (5.3.2.23.2)	None required	None	None	SL: None required LCS: None required LCO: None required AC: 5.10 Ignition Controls - Restrictions on intrusive activities for flammable gas tanks with lightning activity in 50 mi - Restrictions on intrusive activities for organic solvent tanks with lightning activity in 50 mi - Restrictions on intrusive activities for organic nitrate tanks with lightning activity in 50 mi - Secure elevated equipment in the lowest position with lightning activity in 50 mi	AC 5.10 PREVENTIVE: Restricting operations and activities in intrusive regions of flammable gas tanks and organic solvent and organic salt-nitrate tanks when lightning has been identified within 50 mi, ensures that activities resulting in gas releases are minimized. This minimizes the fuel source when a lightning ignition source is in the vicinity to prevent a deflagration, fire, or reaction. Also lowering equipment elevated by the crane and lowering the crane boom minimizes the location of a lightning strike being conducted to the fuel element in the tanks.
Natural Phenomena - Seismic (5.3.2.23.3)	None required	None	None	SL: None required LCS: None required LCO: None required AC: 5.14 Emergency Preparedness - Response procedures	AC 5.14 MITIGATIVE: Establishing response requirements for a seismic event that addresses as applicable; facility inspections, transfer termination, intrusive activity termination, ventilation system evaluation, site evacuation, restoration of services, etc. serve to mitigate the potential consequences of a seismic event by placing TWRS in the safest condition, protecting onsite and offsite personnel, and implementing restoration activities. These controls manage the risk of uncontrolled releases of radiological and toxicological material that may be caused by the earthquake and limit direct risk to the facility worker.
General Control (none)	None required	None	None	SL: None required LCS: None required LCO: None required AC: 5.12 Transfer Controls - Transfers into SSTs prohibited except for flushing	AC 5.12 PREVENTIVE: A basic assumption in the analysis is that transfers into SSTs are not permitted (exclusive of flushing). This general control is included in the transfer controls.

Table 6-1. Hazard and Accident Analyses; Safety Structures, Systems, and Components; and Technical Safety Requirement Cross Reference. (25 sheets)

49 CFR 173.403, Definitions, Title 49, Code of Federal Regulations, Subpart I, as amended, U.S. Department of Transportation, Washington, D.C.

49 CFR 173.425, Transport Requirements for Low Specific Activity (LSA) Radioactive Materials, Title 49, Code of Federal Regulations, Subpart I, as amended, U.S. Department of Transportation, Washington, D.C.

49 CFR 173.435, Table of A, and A, Values for Radionuclides, Title 49, Code of Federal Regulations, Subpart I, as amended, U.S. Department of Transportation, Washington, D.C.

DOE-RL-92-36, 1993, Hanford Site Hoisting and Rigging Manual, U.S. Department of Energy, Richland Operations Office, Richland, Washington.

DOE-STD-1027-92, 1992, Hazard Categorization and Accident Analysis Techniques for Compliance with DOE Order 5480.23, Nuclear Safety Analysis Reports, U.S. Department of Energy, Washington, D.C.

HNF-2296, 1998, Justification for Continued Operation of Transfer Lines Having Structures with Less Volume than 241-A-A Valve Pit, Rev. 0, Duke Engineering and Services Hanford, Inc., Richland, Washington.

NFPA, 1996, National Electric Code, Articles 500-Hazardous (Classified) Locations and 501-Class 1 Locations, NFPA 70, National Fire Protection Association, Quincy, Massachusetts.

Wagoner, J.D., 1998, Authorization Basis Approval of Justification for Continued Operation (JCO) of Transfer Lines Having Structures With Less Volume Than the 241-A-A Valve Pit, (Letter 98-WSD-052 to H.J. Hatch, Fluor Daniel Hanford, Inc., March 17), U.S. Department of Energy, Richland Operations Office, Richland, Washington.

WHC-SD-RE-SAP-013, 1993, Safety Analysis Report for Packaging, Railroad Liquid Waste Tank Cars, Rev. 6, Westinghouse Hanford Company, Richland, Washington.

WHC-SD-TP-SEP-011, 1996, Safety Evaluation for Packaging for the 222-S Laboratory Cargo Tank, Rev. 1, Westinghouse Hanford Company, Richland, Washington.

WHC-SD-WM-SAD-035, 1997, A Safety Assessment of Rotary Mode Core Sampling in Flammable Gas Single Shell Tanks: Hanford Site, Richland, Washington, Rev 0-b, Duke Engineering and Services Hanford, Richland, Washington.

Table 6-1. Hazard and Accident Analyses; Safety Structures, Systems, and Components; and Technical Safety Requirement Cross Reference. (25 sheets)

AC = Administrative Control.
AWF = Aging Waste Facility.
BIO = Basis for Interim Operation.
CAM = continuous air monitor.
CPS = criticality prevention specification.
CSER = criticality safety evaluation report.
DCRT = double-contained receiver tank.
DST = double-shell tank.
HASP = Health and Safety Plan.
HEGA = high-efficiency gas adsorber.
HEME = high-efficiency mist eliminator.
HEPA = high-efficiency particulate air (filter).
JCO = Justification for Continued Operation.
LANL = Los Alamos National Laboratory.
LCO = Limiting Condition for Operation.
LCS = Limiting Control Setting.
LFL = Lower Flammability Limit.
MISF = miscellaneous inactive storage facility.
OGT = overground transfer (line).
PRV = pressure relief valve
RCSTS = Replacement Cross-Site Transfer System.
SARP = Safety Analysis Report for Packaging.
SC = Safety-Class.
SEP = safety evaluation for packaging.
SL = Safety Limit.
SR = surveillance requirement.
SS = Safety-Significant.
SSC = structure, system, and component.
SST = single-shell tank.
TSR = Technical Safety Requirement.
TWRS = Tank Waste Remediation System.
U.S. DOT = United States Department of Transportation.
WRSS = Waste Retrieval Sluicing System.

Note: Equivalent information for WRSS operations is contained in Addendum 1.

This page intentionally left blank.

CHAPTER 7.0
CONCLUSIONS

This page intentionally left blank.

CHAPTER 7.0
CONCLUSIONS

CONTENTS

7.0 CONCLUSIONS 7-1
7.1 GENERAL AND SPECIFIC CONCLUSIONS 7-1
7.2 SUMMARY CONCLUSIONS 7-3
7.3 REFERENCES 7-3

LIST OF TABLES

7-1 Listing of Considerations to Further Reduce Risk T7-1

LIST OF TERMS

AWF	Aging Waste Facility
BIO	Basis for Interim Operation
DCRT	double-contained receiver tank
DST	double-shell tank
SSC	structure, system, and component
SST	single-shell tank
TSR	Technical Safety Requirement
TWRS	Tank Waste Remediation System
USQ	Unreviewed Safety Question
WRSS	Waste Retrieval Sluicing System

7.0 CONCLUSIONS

The Tank Waste Remediation System Basis for Interim Operation (BIO), HNF-SD-WM-BIO-001 and associated Technical Safety Requirement (TSR) document provide the basis and controls for Tank Waste Remediation System (TWRS) facility operations until approval of the Final Safety Analysis Report and associated TSR document complying with the requirements of DOE 5480.23, *Nuclear Safety Analysis Reports*, and DOE 5480.22, *Technical Safety Requirements*. The BIO supports the conclusion that authorized TWRS facility operations can be conducted safely and provides a sound basis for conducting effective Unreviewed Safety Question (USQ) evaluations to ensure continued safe operations.

Addendum 1, "Tank 241-C-106 Sluicing Safety Analysis," to this BIO and the TSR document provide the interim safety basis for Waste Retrieval Sluicing System (WRSS) operations. Addendum 1 supports the conclusion that WRSS operations can be performed safely and provides the basis for conducting USQ evaluations related to project activities and facilities.

Addendum 2, "Replacement Cross-site Transfer System Safety Analysis," to this BIO and the TSR document provide the interim safety basis for replacement cross-site transfer system operations. Addendum 2 supports the conclusion that replacement cross-site transfer system operations can be performed safely and provides the basis for conducting USQ evaluations related to the replacement cross-site transfer system.

Addendum 3, "702-AZ Ventilation System (241-AZ-702) Safety Analysis," to this BIO and the TSR document provide the interim safety basis for the 702-AZ ventilation system. Addendum 3 supports the conclusion that the 702-AZ ventilation system can be operated safely and provides the basis for conducting USQ evaluations related to the 702-AZ ventilation system.

Addendum 4 to this BIO and its related TSR revisions provide the safety basis for the 241-AZ-101 mixer pump test. Addendum 4 supports the conclusion that the 241-AZ-101 mixer pump test can be operated safely and provides the basis for conducting USQ evaluations related to the 241-AZ-101 mixer pump test.

7.1 GENERAL AND SPECIFIC CONCLUSIONS

Based on this BIO, the following conclusions can be made:

- Separate Authorization Basis documents continue to exist for some TWRS facilities, activities, and projects.
- This BIO provides an acceptable description of Hanford Site characteristics and TWRS facilities and operations within the scope of this BIO (Chapter 2.0, "Facility Description," Appendices B and C, Addendum 1 for WRSS operations, Addendum 2 for the replacement cross-site transfer system, and Addendum 3 for the 702-AZ ventilation system, and Addendum 4 for the 241-AZ-101 mixer pump test).

- Over 1,090 occurrence reports and off-normal events from January 1972-May 1998 were reviewed to determine the degree of significance of reported abnormal occurrences. None of the tank farm occurrences met the criteria for significant consequences, serious consequences, or very serious consequences.

  These occurrence reports were used in the identification and evaluation of hazardous conditions for TWRS facilities and operations (Chapter 3.0, "Relevant Operational History").

- The safety management programs, applicable requirements, and implementing documents that support TWRS operations provide the administrative framework for safety operation of TWRS facilities. These safety management programs ensure the safe storage of radioactive and hazardous materials; protection of facility workers from exposure to radioactive and hazardous materials and industrial hazards; and protection of the public, onsite workers, and the environment from releases of radioactive and hazardous materials (Chapter 4.0, "Safety Management").

- The hazard classification, performed in accordance with DOE-STD-1027-92, *Hazard Categorization and Accident Analysis Techniques for Compliance with DOE Order 5480.23, Nuclear Safety Analysis Reports*, determined that all of the double-shell tanks, Aging Waste Facility (AWF) tanks, single-shell tanks, associated waste transfer systems, and WRSS are Hazard Category 2. The associated waste transfer systems include the 204-AR Waste Unloading Facility and the 244-AR Vault. Several TWRS facilities are independent segments and are classified as Hazard Category 3 or as a Radiological Facility (Section 5.1, "Introduction," and Addendum 1).

- Hazard analyses representative of TWRS facilities were performed consistent with the guidance in DOE-STD-3009-94, *Preparation Guide for U.S. Department of Energy Nonreactor Nuclear Facility Safety Analysis Reports*. The hazard analyses provide systematic and comprehensive identification and evaluation of hazardous conditions at TWRS facilities, WRSS, and from TWRS operations. Based on the hazard analysis, 29 representative accidents are selected for further quantitative analysis (Section 5.2, "Requirements," Addendum 1, Addendum 2, Addendum 3, and Addendum 4).

- Accident analyses were performed for representative accidents consistent with the guidance in DOE-STD-3009-94.

- Decisions on classifying structures, systems, and components as Safety-Class and Safety-Significant, selecting required TSRs, identifying Defense-in-Depth controls, and identifying additional controls specifically for environmental protection were developed with a disciplined methodology and process using established control decision criteria. Safety structures, systems, and components, TSRs, and Defense-in-Depth controls for the protection of the public and onsite worker were based on the hazard and accident analyses. Controls for the protection of the facility worker and the

environment were selected primarily based on the qualitative hazard analysis. The selected controls were applied to all hazardous conditions identified for TWRS facilities and operations. The controls identified provide a necessary and sufficient set that establish a safety envelop within which TWRS operation can be safely performed (Chapters 5.0, "Safety Analysis," and 6.0, "Operational Controls," and Addendum 1, Addendum 2, Addendum 3, and Addendum 4).

For several postulated accidents the conservatively estimated frequency and calculated consequences of the accident exceed the risk guidelines established by the U.S. Department of Energy for TWRS (e.g., organic salt-nitrate reactions, flammable gas deflagrations, seismic induced accidents). Although the interim risk from these accident are judged acceptable, actions are required to reduce the long-term risk from continued waste storage management. Table 7-1 is a list of items that should be given consideration to further reduce risk.

7.2 SUMMARY CONCLUSIONS

In summary, this BIO and the associated TSRs draw the following conclusions.

- The accidents analyzed to date confirm known vulnerabilities.
- The selected structures, systems, and components and controls (TSRs, health and safety plan, and implementing procedures) provide prevention and mitigation measures to address these vulnerabilities when implemented.
- The analyses show that these measures provide reasonable assurance that continued facility operations can be conducted safely.
- Several postulated accidents are shown to be significantly above the risk guidelines based on bounding analyses. Existing and available controls selected provide immediate, near term protection, while options for measures to further reduce risk are evaluated.

Collectively, these conclusions find that the TWRS facilities can be operated safely following the requirements of this BIO until the BIO is replaced by a fully compliant Final Safety Analysis Report. Continuing safety analysis for the Final Safety Analysis Report will further improve understanding of the risk of TWRS and refine these interim controls. Action on considerations identified in this BIO to further reduce risk are also required to address the long-term risk associated with continued storage.

7.3 REFERENCES

DOE 5480.22, 1996, *Technical Safety Requirements*, Change 2, U.S. Department of Energy, Washington, D.C.

DOE 5480.23, 1994, *Nuclear Safety Analysis Reports*, Change 1, U.S. Department of Energy, Washington, D.C.

DOE-STD-1027-92, 1992, *Hazard Categorization and Accident Analysis Techniques for Compliance with DOE Order 5480.23, Nuclear Safety Analysis Reports*, U.S. Department of Energy, Washington, D.C.

DOE-STD-3009-94, 1994, *Preparation Guide for U.S. Department of Energy Nonreactor Nuclear Facility Safety Analysis Reports*, U.S. Department of Energy, Washington, D.C.

Table 7-1. Listing of Considerations to Further Reduce Risk. (4 sheets)

Number	Consideration
1	Implementing a comprehensive inspection program for DSTs (including AWF tanks), SSTs, DCRTs, catch tanks, and waste transfer piping to identify areas require preventive maintenance or that have a high likelihood of failure
2	Accelerating the interim stabilization of SST farms will reduce significantly the need for heavy load lifting, thereby reducing the time at risk (Tank Failure Due to Excessive Loads)
3	Retrieval of waste from Tank 241-C-106 to address the most significant SST with high heat waste (Tank Bump)
4	Acceleration of the retrieval of other SSTs where an analysis of the tank heat load indicates the tank contents could approach the saturation temperature in the absence of active ventilation (Tank Bump)
5	Completion of the upgrades to provide grounding, bonding, and air terminals to reduce the possibility of lightning-initiated ignition (Natural Phenomena - Lightning)
6	Installation of additional lightning protection systems (e.g., catenary network) for waste tanks that pose significant long-term risks caused by lightning-initiated accidents (Natural Phenomena - Lightning)
7	Provide a seismic monitor notification and alarm capability in the 200 Areas to alert personnel in case of a seismic event so emergency actions can be initiated as quickly as possible (Natural Phenomena - Seismic)
8	Provide an automatic shut down of waste transfer pumps following a seismic event (Natural Phenomena - Seismic)
9	Perform a comprehensive seismic vulnerability study that considers the process operating history of the tank farm facilities to provide recommendations that address identified vulnerabilities (Natural Phenomena - Seismic)
10	Completion of the upgrades to provide grounding, bonding, and air terminals to reduce the possibility of lightning-initiated ignition (Organic Solvent Fire)
11	Completion of the tank vapor space sampling program for all tanks to predict the presence of significant quantities of organic solvents (Organic Solvent Fire)
12	Reduction in the organic solvent inventory in tanks (Organic Solvent Fire)

Table 7-1. Listing of Considerations to Further Reduce Risk. (4 sheets)

Number	Consideration
13	Spray leaks are currently modeled conservatively because of large uncertainties in the phenomena of leak size, orientation, crack plugging, aerosol loading, and deposition. Crack plugging by solids carried in the waste could be investigated with some simple experiments. This would potentially limit the duration of the spray leak and significantly reduce the inventory released. More detailed computer modeling of the generation, agglomeration, deposition, and leakage of aerosols from an enclosed pit or compartment would likely reduce the dose from the mitigated spray leaks (from pits and compartments) (Spray Leak in Structures or from Overground Transfer Lines).
14	Installation and operation of high-efficiency particulate air filter ventilation systems on process pits, diversion boxes, vault pits, and cleanout boxes; and installing and operating radiation monitors in process pits, diversion boxes, vault pits, and cleanout boxes to detect waste leaks (Spray Leak in Structures or from Overground Transfer Lines)
15	Accelerating the elimination of steam jets and the blanking or removal of steam lines that potentially tie into waste tanks (Steam Intrusion from Interfacing Systems)
16	Ventilation Upgrades—Making modifications to allow direct measurement of the flow rate through each individual actively ventilated tank would provide better assurance that flammable gases are not accumulating as a result of continuous releases. DCRT design modifications to provide an inlet flow path to each tank and to allow measurement of the flow rate through each DCRT would provide assurance that flammable gases are not accumulating in DCRTs (Flammable Gas Deflagrations).
17	Monitoring Upgrades—Adding monitors (e.g., flammable gas, level) with alarms to tanks (a) which either exhibit gas release, level change, or other parameters that would be valuable in better defining the hazard, or (b) where intrusive work is planned, would allow detection of changes in parameters such as flammable gas concentrations (Flammable Gas Deflagrations).
18	Ignition Controls—Verifying that tank ventilation systems, instrumentation, and equipment for intrusive activities meet industry standards (e.g., National Fire Protection Association, American Petroleum Institute) requirements for hazardous location equipment would eliminate potential hazards. Upgrade equipment that does not meet these requirements or justify that the design is equivalent to the industry standard requirements (Flammable Gas Deflagrations).

Table 7-1. Listing of Considerations to Further Reduce Risk. (4 sheets)

Number	Consideration
19	Other Controls—Installation and operation of mixer pumps in tanks with the potential for gas release events would reduce the time at risk for these large releases by converting the releases into manageable continuous releases. Provisions of a sample port on the ventilation inlet duct would facilitate sampling on loss of ventilation (Flammable Gas Deflagrations).
20	Continuing research on flammable gas generation and retention phenomena in tank waste (Flammable Gas Deflagrations)
21	Augmenting the characterization and testing to reduce the actual chemical compositions making up total organic carbon would reduce conservatisms in modeling reaction energetics (Organic Salt-Nitrate Reaction).
22	Investigating the efficiency of removing soluble organic species that could cause propagating reactions by salt well pumping or washing with sodium hydroxide solution (Organic Salt-Nitrate Reaction)
23	Installing and operating a spray system with high organic concentrations to ensure adequate moisture in the waste (Organic Salt-Nitrate Reaction)
24	Completing the upgrades to provide grounding, bonding, and air terminals to reduce the possibility of lightning-initiated accidents (Organic Salt-Nitrate Reaction)
25	Provide a seismic monitor notification and alarm capability in the 200 Areas to alert personnel in case of a seismic event so emergency actions can be initiated as quickly as possible (Natural Phenomena - Seismic)
26	Eliminate or mitigate gas release events by accelerating tank waste retrieval (Natural Phenomena - Seismic)
27	Source Term—The radioactive inventory estimates for the high-level waste tanks are currently divided into three groups of tanks: DST, AWF tank, and SST; with the isotopic inventories represented by the maximum sample value within the group. Except for the AWF, this is a recognized conservatism necessary because sampling and analysis data presently cannot provide discrete source terms for all individual tanks with adequate statistical confidence to support a safety basis. With more complete data of the high-level waste tank inventory, the DSTs and SSTs could be parceled into more groups with only a few tanks having to be represented by the current conservative inventory estimates. Orders of magnitude reductions could be achieved for some DSTs and some SSTs. It is important that little reduction in the inventory estimates is achievable for some tanks because the sample data represents the actual tank contents (General Accident Analysis).

Table 7-1. Listing of Considerations to Further Reduce Risk. (4 sheets)

Number	Consideration
28	Toxicological Methodology—The current toxicological exposure methodology is based on a sum-of-fractions which represents the best approach currently available. Potential risk reductions could be achieved by developing a method which, while still conservative, does not rely on a simple sum of exposure concentrations divided by the respective concentration limits. Additional risk reductions could also be achieved by revising the toxic risk guidelines, which are based on routine occupational exposures at the lowest limits, to less conservative limits (General Accident Analysis).
29	Atmospheric Dispersion Modeling—The accident analysis modeling of atmospheric dispersion neglects agglomeration and deposition of particulate material. The radioactive components and some of the toxicological components are carried by aerosols. More detailed computer modeling of the agglomeration and deposition of the combustion aerosols could reduce the consequences of several accidents (e.g., organic salt-nitrate reaction, organic solvent) (General Accident Analysis).
30	Emergency Response Actions—Calculating radiological and toxicological exposures to the maximum offsite and onsite individuals takes no credit for emergency response actions (evacuation, sheltering) or personnel self-evacuations based on observed or sensed conditions. If further assessment of postulated accidents identifies means of detecting the event and if a demonstrated ability to take emergency response actions can be shown, the exposure times to the maximum offsite and onsite individual may be reduced. Accident detection could require classification of additional safety SSCs, new TSRs, or consideration for adding new monitoring systems (General Accident Analysis).

AWF = Aging Waste Facility.
DCRT = double-contained receiver tank.
DST = double-shell tank.
SSC = structure, system, and component.
SST = single-shell tank.
TSR = Technical Safety Requirement.

This document was too large to scan as a single document; therefore, it has been divided into smaller sections.

Section 3 of 10

Document Information			
Document #	SD-WM-BIO-001	Revision	1
Title	TWRS BASIS FOR INTERIM OPERATION		
Date	10/28/1998		
Originator	Y.G. NOORANI	Originator Co.	FDH
Recipient		Recipient Co.	
References	ECN-644566		
Keywords	AUTHORIZATION BASIS		
Projects	BIO,TWRS,TFARM,W-320		
Other Information	THIS SECTION CONTAINS APPENDICES A THRU C OF VOLUME 3		

HNF-SD-WM-BIO-001
Revision 1

Tank Waste Remediation System Basis for Interim Operation

Volume III:
Appendixes A through F

Prepared by
DE&S Hanford, Inc. for Lockheed Martin Hanford Corporation

Date Published
September 1998

Prepared for the U.S. Department of Energy

FLUOR DANIEL HANFORD, INC.
Richland, Washington

Hanford Management and Integration Contractor for the
U.S. Department of Energy under Contract DE-AC06-96RL13200

Approved for Public Release; Further Dissemination Unlimited

APPENDIX A
BASIS FOR INTERIM OPERATION DEVELOPMENT PROCESS

This page intentionally left blank.

APPENDIX A
BASIS FOR INTERIM OPERATION DEVELOPMENT PROCESS

LIST OF TERMS

BIO	Basis for Interim Operation
FDH	Fluor Daniel Hanford, Inc.
ICDT	Integrated Control Decision Team
JCO	Justification for Continued Operation
PHMC	Project Hanford Management Contract
SER	Safety Evaluation Report
SSCs	structures, systems, and components
TSR	Technical Safety Requirement
TWRS	Tank Waste Remediation System
WRSS	Waste Retrieval Sluicing System

This page intentionally left blank.

APPENDIX A
BASIS FOR INTERIM OPERATION DEVELOPMENT PROCESS

This appendix describes the Tank Waste Remediation System Basis for Interim Operation (BIO) development process including a chronology of review and approval steps. Figure A-1 presents an overview of the BIO development process. This appendix also describes summary of changes to the BIO subsequent to its initial release and implementation.

Development Process

1. The first step in the preparation of the BIO was the identification of the facilities included in the scope of this document. For each facility identified, the hazardous material and energy sources was compiled. Hazards evaluations were then performed to identify all hazardous conditions (i.e., accidents) associated with the facilities and their operations. Using the qualitative results of the hazard evaluations, each hazardous condition was then placed into a frequency and consequence bin. The results of these activities are documented in WHC-SD-WM-TI-759, *Hazard Evaluations for the Tank Waste Remediation Systems Final Safety Analysis Report*.

2. The hazardous conditions with significant offsite and onsite consequences were grouped into 29 representative accidents for detailed quantitative analysis. For those hazardous conditions which affected only the facility worker or the environment, additional controls were selected based on the qualitative hazard evaluation. The results of these activities are documented in Appendix D, "Hazardous Analysis Results Report."

3. The next step of the process was to perform the quantitative accident analyses for the representative accidents and determine the controls required to prevent or mitigate unacceptable consequences. The analyses were documented in calculation notes (see Section 5.0, "Safety Analysis," for applicable references). During the process, control decision meetings were held to identify the initial set of controls. These decisions were recorded in Control Decision Records that are archived in the Final Safety Analysis Report project files. These control decisions subsequently went through many reviews and revisions.

4. The next step of the process was to develop the parameters that govern the safety functions of the safety structures, systems, and components (SSCs). These parameters are those necessary to develop the Technical Safety Requirements (TSRs) (see step 5). The parameters were developed on the facility, system, or component level, on the basis of the TSR development needs. The operating parameters of the safety SSCs are documented in HNF-SD-WM-SEL-040, *TWRS Facility Safety Equipment List*.

5. The next step was the preparation of the administrative controls, safety limits, limiting control settings, limiting conditions of

operation, surveillance requirements and design features required to implement and maintain the controls selected in step 3. These activities are documented in HNF-SD-WM-TSR-006, *Tank Waste Remediation System Technical Safety Requirements*, and in WHC-SD-WM-HSP-002, *Tank Farms Health and Safety Plan (HASP)*.

6. The BIO document (Revision E of HNF-SD-WM-BIO-001) was submitted for Tier II review to the U.S. Department of Energy, Richland Operations Office (RL) by the former Tank Waste Remediation System Management and Operation Contractor, Westinghouse Hanford Company (WHC), on September 30, 1996 (Bacon 1996). The TSRs (Revision E of HNF-SD-WM-TSR-006) were submitted to RL for Tier II review by the Project Hanford Management Contract (PHMC) on October 15, 1996 (Hall 1996). (The draft TWRS Final Safety Analysis Report [FSAR] and draft FSAR TSRs [Revision I of HNF-SD-WM-TSR-006] were submitted to RL on November 15, 1996. The hazard and accident analysis and TSRs in the BIO and FSAR are consistent.)

7. The next step in the BIO and TSR development process was the RL's Tier II and Tier III review and comment of the subject documents. A Safety Evaluation Report (SER) was issued by RL on December 12, 1996, with direction to incorporate RL comments prior to their final submittal (Wagoner 1996).

8. RL directed PHMC to form a joint RL-Contractor Integrated Control Decision Team (ICDT) to evaluate the TWRS FSAR accident scenarios that were identified to be above the risk evaluation guidelines. The ICDT reviewed accidents which have analyzed consequences above the risk evaluation guidelines and examined controls and options for managing risk in the future. The ICDT meeting proceedings are documented in DOE/RL-97-26, *U.S. Department of Energy (DOE), Richland Operations Office (RL) Tank Waste Remediation System (TWRS) Final Safety Analysis Report (FSAR) Integrated Control Decision Team (ICDT) Meetings, January 22-31, 1997*.

9. A control verification process was developed and all TSR controls were evaluated per RL direction (Wagoner 1996). The TSR verification report was submitted to RL on February 6, 1997 (Funderburke 1997). RL approved the TSR verification report on March 5, 1997 (Sohn 1997).

10. Revised BIO (Revision F of HNF-SD-WM-BIO-001) was submitted to RL for approval on February 6, 1997 (Hall 1997a).

11. The Justification for Continued Operation (JCO) for the tank farms flammable gas Unreviewed Safety Question (HNF-SD-WM-JCO-007, *Flammable Gas/Slurry Growth Unreviewed Safety Question: Justification for Continued Operation for the Tank Farms at the Hanford Site*, Revision 1) was submitted for RL approval on February 21, 1997 (Hatch 1997a). The HNF-SD-WM-JCO-007 document has been incorporated into the BIO as Appendix E and the flammable gas JCO controls have been incorporated into the TSRs per RL direction (Wagoner 1997a).

12. A BIO Compliance Implementation Plan was developed to address the activities required to fully implement the controls described in the BIO and TSRs. These activities included revising operating procedures, performing training, making minor hardware modifications, etc. The Implementation Plan was submitted to RL on April 1, 1997 (Hatch 1997b; Hall 1997b).

13. Revised TSRs (Revision J of HNF-SD-WM-TSR-006) based on the TSR verification process discussed in step 10 and associated BIO page changes (Revision G of the HNF-SD-WM-BIO-001) were submitted to RL on April 1, 1997, for approval (Hatch 1997b; Hall 1997b).

14. RL provided comments on the BIO Compliance Implementation Plan on May 7, 1997, and delegated approval authority for the Compliance Implementation Plan to the Fluor Daniel Hanford Company (FDH) in concert with the provisions of the PHM Contract (Kinzer 1997).

15. The BIO, TSR, and JCO were approved by RL with directed changes on May 30, 1997 (Wagoner 1997a). A 90-day implementation phase was initiated to accomplish readiness to transition to the BIO Authorization Basis.

16. PHMC declared readiness to transition from the Interim Safety Basis Authorization Basis to the BIO Authorization Basis on August 27, 1997 (Hall 1997c).

17. RL Authorized PHMC to transition to the BIO and the associated TSRs on September 12, 1997 (Wagoner 1997d).

18. TWRS transitioned to the BIO Authorization Basis effective 6:00 a.m. September 29, 1997.

Summary of Changes

The TWRS BIO is a living document and is revised, as required, in accordance with the HNF-IP-0842, Volume IV, Section 5.4, "Unreviewed Safety Questions," procedure. The following is a summary of changes to the BIO since its initial release in July 1997 and implementation in September 1997:

- Changes to incorporate application of selected BIO flammable gas controls for Rotary Mode Core Sampling operations (Wagoner 1997b).
- Changes to redesignate Tank 241-BY-103 from Facility Group 2 to Facility Group 3 tank (Wagoner 1997c).
- Incorporate safety analysis for the Waste Retrieval Sluicing System operations as Addendum 1 (Wagoner 1997e).
- Incorporate safety analysis for 241-AZ-702 Ventilation System as Addendum 3 (Wagoner 1997f).
- Changes to incorporate flammable gas monitoring success criteria for flow validation of 241-AZ-702 Ventilation System (Wagoner 1997g).

- Corrected references to documents that were necessary for control implementation, and were not traceable as referenced. These changes are covered by USQ Screening TF-97-0988.

- Incorporate safety analysis for the Replacement Cross-Site Transfer System as Addendum 2 (Wagoner 1997h and Wagoner 1998a).

- Changes to Addendum 3 to correct applicability statements regarding organic salt-nitrate reaction analysis and clarification of references for the fire hazard analysis described in the addendum. These changes were evaluated in USQ screening TF-98-0266.

- Incorporate safety analysis for the mixer pump process test in Tank 241-AZ-101 as Addendum 4 (Wagoner 1998d)

- Changes to Addendum 1 and BIO main text to incorporate reanalysis of the 241-AZ-702, 241-A-702, 296-C-006, and 296-P-16 ventilation systems (Wagoner 1998e).

- Incorporate safety analysis for salt well pumping of single-shell tanks (Wagoner 1998c and Wagoner 1998f).

REFERENCES

Bacon, R. F., 1996, *Submittal of Tank Waste Remediation System Basis for Interim Operation for U.S. Department of Energy, Richland Operations Office Approval* (letter 9654369 to J. D. Wagoner, U.S. Department of Energy, Richland Operations Office, September 30), Westinghouse Hanford Company, Richland, Washington.

DOE/RL-97-26, 1997, *U.S. Department of Energy (DOE), Richland Operations Office (RL) Tank Waste Remediation System (TWRS) Final Safety Analysis Report (FSAR) Integrated Control Decision Team (ICDT) Meetings, January 22-31, 1997*, Rev. 0, U.S. Department of Energy, Richland Operations Office, Richland, Washington.

Funderburke, W. M., 1997, *Contract Number DE-AC06-96RL13200; Results of the Tank Waste Remediation System Technical Safety Requirements Verification Process and Revisions Identified* (letter FDH-9656697 R2 to D. J. Washenfelder, Fluor Daniel Hanford, Inc., February 6), Lockheed Martin Hanford Corporation, Richland, Washington.

Hall, L. E., 1996, *Transmittal of Tank Waste Remediation System Technical Safety Requirements to Fluor Daniel Hanford, Inc., for Submittal to the U.S. Department of Energy, Richland Operations Office, for Approval* (letter 9654839 to S. Marchetti, Fluor Daniel Hanford Inc., October 15), Lockheed Martin Hanford Corporation, Richland, Washington.

Hall, L. E., 1997a, *Submittal of Tank Waste Remediation System Basis for Interim Operation for U.S. Department of Energy, Richland Operations Office Approval* (letter FDH-9656697R1 to D. J. Washenfelder, Fluor Daniel Hanford, Inc., February 6), Lockheed Martin Hanford Corporation, Richland, Washington.

Hall, L. E., 1997b, *#8023274-K001, Request for Approval of the Tank Waste Remediation System Basis for Interim Operation, Supporting Technical Safety Requirements, and Compliance Implementation Plan Documents* (letter LMHC-9752590 to A. M. Umek, Fluor Daniel Hanford, Inc., March 27), Lockheed Martin Hanford Corporation, Richland, Washington.

Hall, L. E., 1997c, *Tank Waste Remediation System Basis for Interim Operation Authorization Basis Declaration of Readiness and Request to Transition Authorization Basis - Performance Agreement TWR 6.1.1* (letter LMHC-9754775A R1 to A. M. Umek, Fluor Daniel Hanford, Inc., August 27), Lockheed Martin Hanford Corporation, Richland, Washington.

Hatch, H. J., 1997a, *Request for Approval of the Justification for Continued Operation for Flammable Gas Unreviewed Safety Question* (letter FDH-9750858 to J. D. Wagoner, U.S. Department of Energy, Richland Operations Office, February 21), Fluor Daniel Hanford, Inc., Richland, Washington.

Hatch, H. J., 1997b, *Contract Number DE-AC06-96RL15800; Request for Approval of the Tank Waste Remediation System Basis for Interim Operation, Supporting Technical Safety Requirements, and Compliance Implementation Plan Documents* (letter FDH-9752590 to J. D. Wagoner, U.S. Department of Energy, Richland Operations Office, April 1), Fluor Daniel Hanford, Inc., Richland, Washington.

HNF-SD-WM-HSP-002, 1998, *Tank Farms Health and Safety Plan*, Rev. 3, Lockheed Martin Hanford Corporation, Richland, Washington.

HNF-SD-WM-SEL-040, 1998, *TWRS Facility Safety Equipment List*, Rev. 1-A, Lockheed Martin Hanford Corporation, Richland, Washington.

HNF-SD-WM-TSR-006, 1997, *Tank Waste Remediation System Technical Safety Requirements*, Rev. 0, Fluor Daniel Hanford, Inc., Richland, Washington.

Kinzer, J., 1997, *The U.S. Department of Energy (DOE) Richland Operations Office (RL) Tank Waste Remediation System (TWRS) Position on Basis for Interim Operation (BIO) Compliance Implementation Plan (CIP) Approval* (letter 97-MSD-191 to H. J. Hatch, Fluor Daniel Hanford, Inc., May 7), U.S. Department of Energy, Richland Operations Office, Richland, Washington.

Sohn, C. L., 1997, *U.S. Department of Energy, Richland Operations Office (RL), Tank Waste Remediation System (TWRS) Technical Safety Requirements (TSR) Verification Process* (letter 97-MSD-182 to H. J. Hatch, Fluor Daniel Hanford, Inc., March 5), U.S. Department of Energy, Richland Operations Office, Richland, Washington.

TF-97-0988 (USQ Tracking No.), 1997, *ECN to WHC-SD-WM-RD-057, HNF-SD-WM-BIO-001, and HNF-SD-WM-TSR-006, WHC-SD-WM-OSR-004 and WHC-SD-WM-OSR-005 and SD-HS-SAR-010 and An Administrative Procedure Change Request For HNF-IP-0842 (ECN 641985, 646678, 646676, and 646677)*, Rev. 1, Lockheed Martin Hanford Corporation, Richland, Washington.

TF-98-0266 (USQ Tracking No.), 1998, *Changes to Addendum 3 Due to ORR Findings Regarding the FHA and SC Definitions (ECN 647035)*, Rev. 0, Lockheed Martin Hanford Corporation, Richland, Washington.

Wagoner, J. D., 1996, *Contract Number DE-AC06-96RL13200; Approval of Tank Waste Remediation System (TWRS) Basis for Interim Operation (BIO)* (letter 96-MSD-390 to H. J. Hatch, Fluor Daniel Hanford, Inc., December 12), U.S. Department of Energy, Richland Operations Office, Richland, Washington.

Wagoner, J. D., 1997a, *Approval of Key Documents for Addition to the Tank Waste Remediation System (TWRS) Authorization Basis* (letter 97-MSD-211 to H. J. Hatch, Fluor Daniel Hanford, Inc., May 30), U.S. Department of Energy, Richland Operations Office, Richland, Washington.

Wagoner J.D., 1997b, *Contract Number DE-AC06-96RL13200 - Approval of Rotary Mode Core Sampling Authorization Basis Change Request* (letter 97-WSD-165 to H. J. Hatch, Fluor Daniel Hanford, Inc., July 8, 1997), U. S. Department of Energy, Richland Operations Office, Richland, Washington.

Wagoner J. D., 1997c, *Contract Number DE-AC06-96RL13200 - Approval to: Redesignate Tank 241-BY-103 to Flammable Gas Group 3 and Amend the Tank Waste Remediation System (TWRS) Authorization Basis Documentation* (letter 97-WSD-171 to H. J. Hatch, Fluor Daniel Hanford, Inc., July 25, 1997), U. S. Department of Energy, Richland Operations Office, Richland, Washington.

Wagoner, J. D., 1997d, *Approval of Tank Waste Remediation System (TWRS) Basis for Interim Operation (BIO) Readiness and Revised Authorization Basis (AB)* (letter 97-SCD-024 to H. J. Hatch, Fluor Daniel Hanford, Inc., September 12), U.S. Department of Energy, Richland Operations Office, Richland, Washington.

Wagoner J. D., 1997e, *Contract Number DE-AC06-96RL13200 - Approval of Authorization Basis (AB) Amendment Package for Project W-320, Tank C-106 Sluicing* (letter 97-WSD-209 to H. J. Hatch, Fluor Daniel Hanford, Inc., September 17, 1997), U. S. Department of Energy, Richland Operations Office, Richland, Washington.

Wagoner J. D., 1997f, *Contract Number DE-AC06-96RL13200 - Approval of the 702-AZ Ventilation System Safety Basis as Addendum Three to the Tank Waste Remediation System (TWRS) Basis for Interim Operation (BIO), Revision 0c, Project W-030 Licensing and Implementation Strategy and Safety Evaluation Report (SER)* (letter 97-WSD-212 to H. J. Hatch, Fluor Daniel Hanford, Inc., September 29, 1997), U. S. Department of Energy, Richland Operations Office, Richland, Washington.

Wagoner J. D., 1997g, *Contract Number DE-AC06-96RL13200 - U.S. Department of Energy, Richland Operations Office (RL) Directed Change: Add the Success Criteria for 702-AZ Ventilation System Flow Validation to the Authorization Basis* (letter 97-WSD-227 to H. J. Hatch, Fluor Daniel Hanford, Inc., December 5, 1997), U. S. Department of Energy, Richland Operations Office, Richland, Washington.

Wagoner J. D., 1997h, *Contract Number DE-AC06-96RL13200 - Approval of Authorization Basis (AB) Amendment Package for Project W-058, Replacement Cross-Site Transfer System* (letter 97-WSD-247 to H. J. Hatch, Fluor Daniel Hanford, Inc., December 15, 1997), U. S. Department of Energy, Richland Operations Office, Richland, Washington.

Wagoner J. D., 1998a, *Contract Number DE-AC06-96RL13200 - Clarification of Directed Actions Contained in the Safety Evaluation Report (SER) for the Authorization Basis (AB) Amendment Package for Project W-058, Replacement Cross-Site Transfer System* (letter 98-WSD-009 to H. J. Hatch, Fluor Daniel Hanford, Inc., January 28, 1998), U. S. Department of Energy, Richland Operations Office, Richland, Washington.

Wagoner J. D., 1998b, *Contract Number DE-AC06-96RL13200 - Approval of Increased Calculated Consequence for Project W-058* (letter 98-WSD-080 to R. F. Green, Fluor Daniel Hanford, Inc., May 27, 1998), U. S. Department of Energy, Richland Operations Office, Richland, Washington.

Wagoner J. D., 1998c, *Contract Number DE-AC06-96RL13200 - Authorization Basis Amendment Package Transmittal for Saltwell Jet Pumping of Single-Shell Tanks* (letter 98-TWR-013 to H. J. Hatch, Fluor Daniel Hanford, Inc., April 2, 1998), U. S. Department of Energy, Richland Operations Office, Richland, Washington.

Wagoner J. D., 1998d, *Contract Number DE-AC06-96RL13200 - Approval of Tank Waste Remediation System (TWRS) Basis for Interim Operation (BIO) Addendum 4* (letter 98-TWR-020 to R. D. Hanson, Fluor Daniel Hanford, Inc., July 22, 1998), U. S. Department of Energy, Richland Operations Office, Richland, Washington.

Wagoner J. D., 1998e, *Contract Number DE-AC06-96RL13200 - Authorization Basis Amendment for Tank 241-C-106 Sluicing and 241-AZ-702 Ventilation System* (letter 98-TWR-023 to R. D. Hanson, Fluor Daniel Hanford, Inc., August 17, 1998), U. S. Department of Energy, Richland Operations Office, Richland, Washington.

Wagoner J. D., 1998f, *Contract Number DE-AC06-96RL13200 - Transmittal of Amendment To Safety Evaluation Report (SER) Tank Waste Remediation System (TWRS) Authorization Basis (AB) Pertaining to Salt Well Pumping of Single-Shell Tanks (SSTs)* (letter 98-WSD-083 to R. D. Hanson, Fluor Daniel Hanford, Inc., August 24, 1998), U. S. Department of Energy, Richland Operations Office, Richland, Washington.

WHC-SD-WM-TI-759, 1996, *Hazard Evaluations for the Tank Waste Remediation Systems Final Safety Analysis Report*, Rev. 0, Westinghouse Hanford Company, Richland, Washington.

Figure A-1. Basis for Interim Operation Development Process Flowchart.

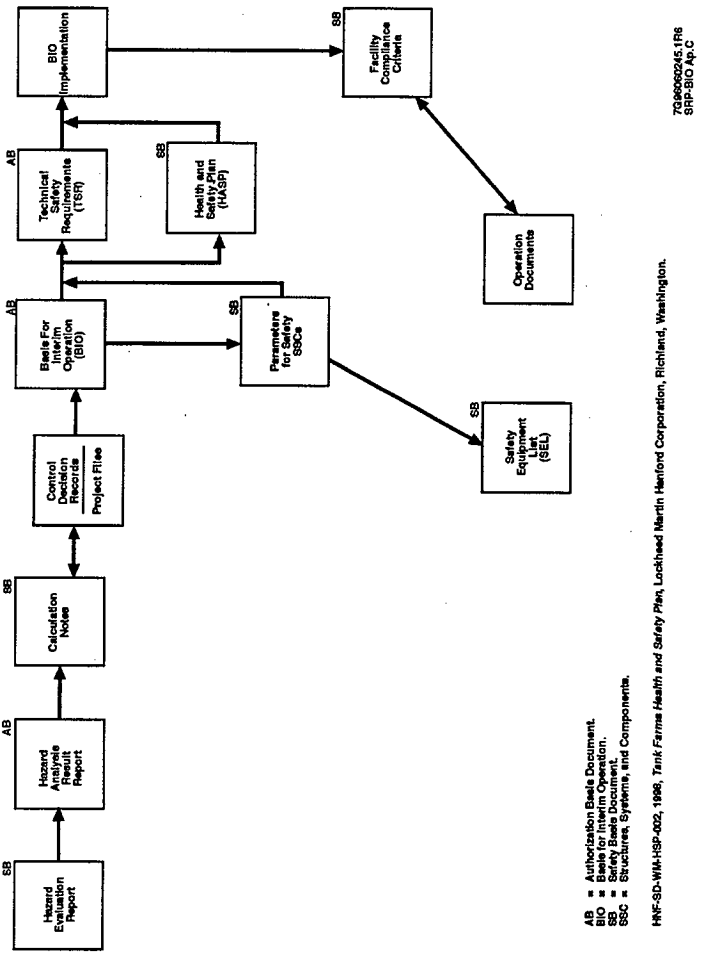

This page intentionally left blank.

APPENDIX B
FACILITY AND PROCESS DESCRIPTION

This page intentionally left blank.

APPENDIX B
FACILITY AND PROCESS DESCRIPTION

CONTENTS

B2.0 FACILITY DESCRIPTION B2-1
B2.1 INTRODUCTION B2-1
B2.2 REQUIREMENTS B2-2
B2.3 FACILITY OVERVIEW B2-3
B2.3.1 Current Mission of TWRS Facilities and Operations Supporting that Mission B2-3
B2.3.2 Brief History of TWRS Operations B2-3
B2.3.3 Interfacing Facilities B2-8
B2.4 FACILITY STRUCTURES B2-9
B2.4.1 Common Structures and Systems of Single-Shell Tanks B2-10
B2.4.2 Specific Structures and Systems of Single-Shell Tanks B2-13
B2.4.3 Common Structures and Systems of Double-Shell Tanks B2-16
B2.4.4 Specific Structures and Systems of Double-Shell Tanks B2-26
B2.4.5 Other Underground Waste Storage Tanks B2-28
B2.4.6 204-AR Waste Unloading Facility B2-36
B2.4.7 244-AR Vault B2-41
B2.4.8 Cribs, Ditches, and Ponds B2-43
B2.4.9 Storage and Handling Areas for Contaminated Equipment and Materials B2-44
B2.4.10 Waste Transfer Systems B2-46
B2.4.11 Common Sitewide Instrumentation and Surveillance Monitoring Systems B2-56
B2.4.12 Cathodic Protection Systems B2-69
B2.4.13 Interlock Systems B2-69
B2.4.14 Mixer Pumps B2-71
B2.4.15 Light-Duty Utility Arm B2-72
B2.4.16 Cone Penetrometer B2-72
B2.5 PROCESS DESCRIPTION B2-73
B2.5.1 Waste Storage B2-73
B2.5.2 Waste Transfer B2-74
B2.5.3 Waste Characterization B2-81
B2.5.4 Waste Concentration B2-82
B2.5.5 Activities at Miscellaneous Tank Farm Facilities . B2-82
B2.6 CONFINEMENT SYSTEMS B2-83
B2.7 SAFETY SUPPORT SYSTEMS B2-84
B2.7.1 Radiation Protection Systems B2-84
B2.7.2 Effluent Monitoring Systems B2-84
B2.7.3 Fire Protection Systems B2-87

CONTENTS (Cont)

B2.8 UTILITY DISTRIBUTION SYSTEMS B2-88
B2.8.1 Water Supply Systems B2-88
B2.8.2 Steam Supply Systems B2-89
B2.8.3 Compressed Air Systems B2-89
B2.8.4 Electrical Power Distribution System B2-90
B2.9 AUXILIARY SYSTEMS AND SUPPORT FACILITIES B2-91
B2.9.1 Administrative Areas B2-91
B2.9.2 Control Facilities and Change Houses B2-91
B2.9.3 Communication Systems B2-91
B2.9.4 Lighting B2-92
B2.9.5 Sewage Treatment B2-92
B2.10 REFERENCES B2-92

LIST OF FIGURES

B2-1 Facilities in the 200 East Area of the Hanford Site FB2-1

B2-2 Facilities in the 200 West Area of the Hanford Site FB2-2

B2-3 Tank Farm Facilities in the 200 East Area of the Hanford Site . FB2-3

B2-4 Tank Farm Facilities in the 200 West Area of the Hanford Site . FB2-4

B2-5 Liquid Waste Transfers to Tank Waste Remediation System Facilities FB2-5

B2-6 Liquid and Solid Waste Transfers from Tank Waste Remediation System Facilities FB2-6

B2-7 Graphic Representation of a Single-Shell Tank FB2-7

B2-8 Typical Configurations of Single-Shell Tanks at the Hanford Site FB2-8

B2-9 Passive Ventilation System for Single-Shell Tanks FB2-9

B2-10 241-C Tank Farm Active Ventilation System FB2-10

B2-11 241-SX Tank Farm Active Ventilation System FB2-11

B2-12 Graphic Representation of a Double-Shell Tank FB2-12

B2-13 A Typical Double-Shell Tank Configuration FB2-13

B2-14 A Typical Central Pump or Distributor Pit FB2-14

B2-15 A Typical Slurry Distributor FB2-15

B2-16 A Typical Annulus Pump Pit FB2-16

B2-17 A Typical Feed Pump Pit FB2-17

B2-18 A Typical Leak Detection Pit FB2-18

B2-19 A Typical Drain Pit FB2-19

B2-20 241-A-702 Primary Ventilation System (Now Isolated) for 241-AY and 241-AZ Tank Farms (Aging Waste Facility) FB2-20

B2-21 Typical Annulus Ventilation System for 241-AZ Tank Farms (Aging Waste Facility) FB2-21

B2-22 Primary Ventilation System for 241-AN, 241-AP, and 241-AW Tank Farms FB2-22

LIST OF FIGURES (Cont)

B2-23 Annulus Ventilation System for 241-AN, 241-AP, and 241-AW Tank Farms FB2-23

B2-24 A Typical 241-AY or 241-AZ Tank (Aging Waste Facility) with Air Lift Circulators and Steam Coils FB2-24

B2-25 Typical Design for Steel Catch Tank Containers in a Vault or Pit FB2-25

B2-26 Typical Design for Direct Buried Concrete or Steel Catch Tanks FB2-26

B2-27 A Double-Contained Receiver Tank in Place FB2-27

B2-28 A Typical Design of Double-Contained Receiver Tank FB2-28

B2-29 Location of the 200 East Area Radioactively Contaminated Miscellaneous Underground Storage Tanks FB2-29

B2-30 Location of the 200 West Area Radioactively Contaminated Miscellaneous Underground Storage Tanks FB2-30

B2-31 The 204-AR Waste Unloading Facility FB2-31

B2-32 First and Second Floor of the 204-AR Waste Unloading Facility . FB2-32

B2-33 Canyon and Process Area Equipment Arrangement of the 244-AR Vault FB2-33

B2-34 Process Area Cross-Section of the 244-AR Vault FB2-34

B2-35 200 East and 200 West Area Cribs, Ditches, and Ponds FB2-35

B2-36 A Typical Crib Structure FB2-36

B2-37 Typical Transfer Pipe Encasement Configurations FB2-37

B2-38 Cleanout Box Equipment and Design FB2-38

B2-39 A Typical Cleanout Box FB2-39

B2-40 Typical Rigid and Flexible Jumpers FB2-40

B2-41 Hanford Site and Plutonium Uranium Extraction (PUREX) Head Connectors FB2-41

B2-42 A Typical Valve Pit FB2-42

B2-43 A Typical Diversion Box FB2-43

B2-44 Typical Diversion Box Operating Connections FB2-44

LIST OF FIGURES (Cont)

B2-45 A Typical Diverter Station FB2-45
B2-46 Jet Pump System FB2-46
B2-47 A Typical Centrifugal Pump FB2-47
B2-48 Drawing of a Food Instrument Corporation Gauge FB2-48
B2-49 Drawing of an ENRAF Gauge FB2-49
B2-50 Specific Gravity and Weight Factor Monitoring FB2-50
B2-51 Sludge-Level Measuring Assembly FB2-51
B2-52 Leak Detection Systems FB2-52
B2-53 Instrumentation for Leak Detection Pit FB2-53
B2-54 Schematic of a Typical Radiation Detection Pit with Sump FB2-54
B2-55 A Typical Leak Detection Transmitter Enclosure FB2-55
B2-56 Typical Double-Shell Tank Thermocouple Element Location FB2-56
B2-57 Typical Double-Shell Tank Temperature Measurement Probe FB2-57
B2-58 Typical In-Tank Thermocouple Arrangement FB2-58
B2-59 Typical Double-Shell Tank Terminal Box Locations FB2-59
B2-60 Core Sampler Assembly FB2-60
B2-61 A Typical Mixer Pump FB2-61
B2-62 Typical Stack Sampling and Monitoring System FB2-62
B2-63 200 East Electrical Switching Diagram FB2-63
B2-64 200 West Electrical Switching Diagram FB2-65
B2-65 Salt Well Jet Pump Isometric View. FB2-67
B2-66 Jet Pump Unit and Foot Valve. FB2-68
B2-67 Salt Well Pump Piping and Instrument Diagram. FB2-69
B2-68 Standard Supplemental COB Enclosure FB2-70

LIST OF TABLES

B2-1 Facilities and Activities Not Included in the Tank Waste Remediation System Basis for Interim Operation TB2-1

B2-2 Projects Not Included in the Tank Waste Remediation System Basis for Interim Operation that have the Potential to Impact Existing Facility Design or Operations Descriptions TB2-2

B2-3 Current Status of Single-Shell and Double-Shell Underground Waste Storage Tanks TB2-3

B2-4 Typical Compounds Generated by Production Processes at the Hanford Site TB2-4

B2-5 Major Facilities that Interface with Tank Waste Remediation System TB2-5

B2-6 Single-Shell Tanks Within the Hanford Site TB2-7

B2-7 Summary of Single-Shell Tank Active Ventilation Systems Equipment TB2-8

B2-8 Dimensions and Capacities of Double-Shell Tanks TB2-9

B2-9 Design Parameters Common to the Double-Shell Tanks TB2-10

B2-10 Summary of Ventilation Systems Equipment for Double-Shell Tanks TB2-12

B2-11 Summary of Double-Contained Receiver Tank Active Ventilation Systems Equipment TB2-13

B2-12 Catch Tank Capacity and Use TB2-14

B2-13 Summary of Catch Tank Dimensions TB2-15

B2-14 Additional Catch Tank Attributes TB2-16

B2-15 Double-Contained Receiver Tanks TB2-17

B2-16 Tank Waste Remediation System-Owned Inactive Miscellaneous Underground Storage Tanks that are Radioactively Contaminated . TB2-18

B2-17 Tank Waste Remediation System-Owned Active Miscellaneous Underground/Aboveground Storage Tanks Containing Nonradioactive Material TB2-20

B2-18 Summary of 204-AR Waste Unloading Facility Ventilation Systems Equipment TB2-23

B2-19 Summary of 244-AR Vault Ventilation Systems Equipment (as Designed) TB2-24

LIST OF TABLES (Cont)

B2-20 Cribs, Ditches, and Ponds Currently Owned or Operated By Tank Waste Remediation System TB2-25

B2-21 Number and Diameter of Vertical Storage Units Associated with Single-Shell Tank Farms TB2-26

B2-22 Active 200 East and 200 West Area Transfer Lines TB2-27

B2-23 Inactive Transfer Lines TB2-34

B2-24 Typical Primary and Supporting Activities at Tank Waste Remediation System Facilities Required to Support Operations . . TB2-43

B2-25 Tank Farm Radionuclide Monitoring Systems by Facility and Stack Number TB2-45

B2-26 Fire Suppression and Detection Systems at Tank Farm Facilities . TB2-47

B2-27 Water Supplies to Tank Waste Remediation System Facilities and Potential Water Use TB2-49

B2-28 Compressed Air Supply to Tank Waste Remediation System Facilities TB2-51

B2-29 Control Facilities and Change Trailers for Tank Waste Remediation System Facilities TB2-53

This page intentionally left blank.

LIST OF TERMS

ASTM	American Society for Testing and Materials
AWF	Aging Waste Facility
BIO	Basis for Interim Operation
BPA	Bonneville Power Administration
CAM	continuous air monitor
CASS	Computerized-Automated Surveillance System
CP	Cone Penetrometer
DCRT	double-contained receiver tank
DOV	diaphragm-operated valve
DST	double-shell tank
EDTA	ethylenediaminetetraacetic acid
FIC	Food Instrument Corporation
FSAR	Final Safety Analysis Report
HEDTA	hydroxyethylethylenediaminetriacetic acid
HEPA	high-efficiency particulate air (filter)
HVAC	heating, ventilation, and air conditioning
LDUA	light duty utility arm
LFL	lower flammability limit
PUREX	Plutonium Uranium Extraction (Facility)
REDOX	Reduction Oxidation (Facility)
SHMS	standard hydrogen monitoring system
SSC	structure, system, and component
SST	single-shell tank
SWP	salt well pump
TBP	tri-butyl phosphate
TMACS	Tank Monitor and Control System
TSR	Technical Safety Requirement
TWRS	Tank Waste Remediation System

This page intentionally left blank.

B2.0 FACILITY DESCRIPTION

B2.1 INTRODUCTION

In this chapter, the Tank Waste Remediation System (TWRS) tank farm facilities and operations are described to support assumptions used in Chapter 5.0, "Safety Analysis." The structures, systems, and components described are necessary to the TWRS mission and provide the means to safely store, treat, and manage tank farm wastes. The design, siting, and operation of these structures, systems, and components, in conjunction with the institutional and safety programs discussed in Chapter 4.0, "Safety Management," provide layers of physical and administrative protection to prevent or mitigate unwanted releases of radioactive or hazardous materials. Those systems that are directly relied upon to protect the facility worker, the onsite worker, or offsite individuals are identified in Chapter 6.0, "Operational Controls." The structures, systems, and components (i.e., Defense-in-Depth, Safety-Class, and Safety-Significant) are discussed further in Chapters 5.0 and 6.0.

As shown in Figures B2-1 and B2-2, the TWRS facilities are located in the 200 East, 200 West, and 600 Areas of the Hanford Site. The TWRS facilities comprise the single-shell tank (SST) farms, the double-shell tank (DST) farms, and associated support facilities, systems, and transfer equipment. All SSTs are no longer receiving waste and are considered out of service. The DSTs, however, may receive liquid waste from processing activities or other tanks and are considered in service. Even though all SSTs at TWRS are not currently receiving waste, waste storage in the tanks and waste transfer out of the tanks will continue until final waste disposal plans are approved. The TWRS facilities within the scope of the Basis for Interim Operation (BIO) is identified in Chapter 1.0, "Introduction."

The TWRS mission as described in HNF-SD-WM-MAR-008, *TWRS Mission Analysis Report*, includes waste storage management, retrieval, pretreatment, immobilization, interim storage and disposal, and tank closure operations. The TWRS Authorization Basis addresses the "manage tank waste" function, which is limited to the storage of waste before retrieval for processing; waste characterization; transfer of liquid wastes to resolve significant safety issues, optimize tank space, volume reduction, interim stabilization, or emergency pumping; and out-of-tank concentration (e.g., 242-A Evaporator) of tank waste to support tank space usage. In addition, this function also includes the treatment or preparation of liquid, airborne, and solid wastes before releasing to the environment or other onsite waste handling facilities and monitoring liquids released intentionally (e.g., discharges to cribs) or inadvertently (e.g., leaking SSTs) to the soil column.

The BIO addresses the operations or processes, with the exception of out-of-tank waste concentration, and the equipment (e.g., temperature monitors, liquid level indicators, samplers), systems (e.g., waste transfer piping, maintenance programs, conduct of operations), or facilities (e.g., DSTs, SSTs, waste handling facilities) required to support the "manage tank waste" function.

The specific facilities and projects that are excluded from the current BIO are listed in Tables B2-1 and B2-2, respectively. Projects currently excluded will be incorporated into the BIO during future annual revisions as appropriate.

Section B2.3, "Facility Overview" includes an overview of the facilities and operations discussed in this chapter, and more detail on the structures is given in Section B2.4, "Facility Structures." Requirements that are relevant to this chapter are listed in Section B2.2, "Requirements." Sections B2.5 through B2.9 contain details of the operations, support systems, and equipment at each of these facilities, including the following:

- **Current TWRS Operations**—tank waste storage and waste transfers
- **Safety Support Systems**—fire protection, radiation and toxicological monitoring, and effluent monitoring
- **Utility Distribution Systems**—electrical supply systems, process and sanitary water, and compressed air.

B2.2 REQUIREMENTS

The design codes, standards, regulations, and U.S. Department of Energy orders relevant to this chapter and required for establishing the Authorization Basis for TWRS facilities are as follows:

- DOE 5480.7A, *Fire Protection* (1993)[1]
- DOE 5480.28, *Natural Phenomena Hazard Mitigation* (1993)[1]
- DOE 5820.2A, *Radioactive Waste Management* (1988)
- DOE 6430.1A, *General Design Criteria* (1989)[1]
- DOE-STD-1020-94, *Natural Phenomena Hazards Design and Evaluation Criteria for Department of Energy Facilities* (Change 1)
- DOE-STD-1021-93, *Natural Phenomena Hazards Performance Categorization Guidelines for Structures, Systems, and Components* (Change 1)
- DOE-STD-1022-94, *Natural Phenomena Hazards Characterization Criteria* (Change 1)
- DOE-STD-1023-95, *Natural Phenomena Hazards Assessment Criteria* (Change 1).

[1]Although DOE 5480.7A, 5480.28, and 6430.1A have been rescinded, the contractor is obligated by the existing contract to meet the requirements stated in these orders.

Before the current design requirements were issued, facilities were designed and constructed in accordance with the functional and safety requirements documented in project functional design criteria, specifications, and drawings (WHC-SD-TWR-RPT-002, *Structural Integrity and Potential Failure Modes of the Hanford High-Level Waste Tanks*).

B2.3 FACILITY OVERVIEW

The TWRS tank farm facilities provide the physical means for moving radioactive liquid wastes between processing and storage facilities. In this section, an overview of tank farm facilities configuration is given (Figures B2-3 and B2-4), the current mission of the TWRS facilities is defined, and the operations performed in the facilities are briefly described.

B2.3.1 Current Mission of TWRS Facilities and Operations Supporting that Mission

The TWRS mission as described in WHC-SD-WM-MAR-008 includes storage management, retrieval, pretreatment, immobilization, interim storage and disposal, and tank closure operations. The BIO addresses the tank farm facilities and operations that support the "manage tank waste" function. Tank farm facilities necessary for managing the tank waste are the SST and DST farms and the tank farm supporting facilities (e.g., catch tanks, DCRTs, and transfer lines). Necessary operations are in-tank waste storage, tank-to-tank transfers, waste characterization, and waste concentration.

B2.3.2 Brief History of TWRS Operations

The TWRS project was established in 1991 to integrate all aspects of the treatment and management of the high-level radioactive wastes in 177 underground storage tanks in the 200 East and 200 West Areas. All aspects of operations, safety, corrective actions, characterization, projects, and disposal are included. The contractor is responsible for managing and operating the waste tanks.

B2.3.2.1 Development of SST and DST Farms. The production of defense-related materials at the Hanford Site generated large quantities of solid and liquid radioactive mixed waste. Chemical processing of irradiated uranium fuels generated alkaline slurries containing heavy metals, organic solvents, inorganic salts, uranium, plutonium, and mixed fission products. Cooling water, condensates, and other low-level wastes from processing operations were discharged to the ground. High-level wastes were placed in the large, steel-lined, underground SSTs for temporary storage. Over time, the design of the high-level waste tanks has gradually improved and been modified, and more tanks have been built to store an increasing volume of waste.

The underground waste storage tanks are grouped into "farms" and are buried approximately 3 m (10 ft) belowground near the center of the Hanford Site in the 200 East and 200 West Areas. The tanks were buried at

this depth to shield facility workers and the public from the radioactive wastes and also to prevent or mitigate the consequences of releases of radioactive materials.

Many of the tank farm facilities have been used beyond their intended design life. Continued safe operations are ensured by comprehensive maintenance and surveillance programs. These programs and other programmatic features that support TWRS operations are discussed in Chapter 4.0.

Certain tanks within the tank farms present unique safety hazards because of past in-facility or in-tank operations. These tanks are identified as "watch list" tanks. These "watch list" tanks are categorized on the basis of the unique safety hazard presented by the content of the waste in the tank. The "watch list" tank categories are as follows.

- **Hydrogen/Flammable Gas Tanks**—Suspected to have a significant potential for hydrogen/flammable gas generation, entrapment, and episodic release. The presence of a flammable gas mixture and an ignition source would increase the risk of a release of radioactive material to the environment.

- **Organic Salt Tanks**—Contain organic carbon. High concentrations of organic compounds/chemicals could support an exothermic reaction at elevated temperatures (WHC-EP-0681, *Interim Criteria for Organic Watch List Tanks at the Hanford Site*). Under certain scenarios involving overheating of the tank, such a mixture of organic solids could react rapidly, possibly damaging the tank and allowing a release of radioactive material.

- **High Heat Tanks**—Contain heat-generating, cesium and strontium-rich sludge and require the maintenance of drainable liquid in the tanks to promote cooling. Water is periodically added to the tanks to maintain liquid levels. The tanks are cooled by evaporation in conjunction with active ventilation.

The underground waste storage tanks are briefly described in the following paragraphs. The latest tank summary data for the SSTs and DSTs is provided in HNF-EP-0182, *Tank Farm Surveillance and Waste Status Summary Report for Month Ending March 31, 1998*. (This was the current version as of the time of BIO annual update. The report is published each month.) HNF-EP-0182 includes descriptions of currently stored waste, tank watch list designations, and waste volumes by type of waste (i.e., supernatant, interstitial liquids, sludge, and salt cake). For the SSTs, the status of interim stabilization and intrusion-prevention efforts is included.

B2.3.2.1.1 Single-Shell Tank Farms. Twelve SST farms containing 149 tanks were constructed between 1943 and 1964 and grouped into farms consisting of 4 to 18 tanks. The farms were divided equally between the 200 East and the 200 West Areas and assigned letter identifiers consistent with the area designations. Tank farms beginning with letters A to N are located in 200 East, with the last half of the alphabet located in 200 West. The original SST design was a reinforced concrete shell and dome with mild carbon steel lining the bottom and walls. Over time, while the basic design remained essentially the same, the depth of the steel liner within the

concrete shell was increased with corresponding increases in operating depth and storage capacity. Minor design improvements, however, were made in the tank bottoms.

The first tanks, built concurrently with the bismuth-phosphate processing plants (B Plant and T Plant), were designed with 5.5 m (18 ft) liners and operating volumes of 2 million L (530,000 gal).[2] The next tanks were built first with 7.3 m (24 ft) liners and operating volumes of 2.9 million L (758,000 gal) and finally with liner heights of 9.8 m (32 ft) and operating capacities of 3.8 million L (1 million gal).

No process wastes have been added to the 149 SSTs since November 1980; therefore, these tanks are considered out of service. The SST farms are described in detail in Section B2.4.

No tank leaks were reported at the Hanford Site before the early 1950s; however, some pipes and fittings made from materials other than stainless steel did leak as early as 1945 (WHC-MR-0293, *Legend and Legacy: Fifty Years of Defense Production at the Hanford Site*). The first large, confirmed tank leak, 208,000 L (55,000 gal), occurred in 1956 at Tank 241-U-104. The largest known leak from a Hanford Site SST occurred in 1973 when 435,000 L (115,000 gal) escaped from Tank 241-T-106.

In a November 1963 incident, Tank 241-A-105, which had received PUREX high-level waste for about three years, underwent a steam pressurization event below the tank liner bottom. The event ripped the liner and formed an irregular bulge about 15 m (50 ft) in diameter by 2 m (8 ft) high in the tank liner bottom. Following this incident, the tank was immediately taken out of service; and was interim stabilized in July 1979 and finally interim isolated in October 1985. For 10 years following the incident, the contents were kept cool by using an exhauster and by sprinkling a small amount of water on the sludge. Nothing could safely remove the sludge trapped under the ruptured liner, but the tank was substantially emptied in 1977, and a hole was chemically milled at the top of the bulge (in 1977) to allow potential radiolytic hydrogen to escape. Temperatures below the tank are monitored via probes in lateral wells.

Currently, 67 SSTs are assumed to be leaking on the basis of tank surveillance data that indicates a loss of liquid attributed to a breach of tank integrity (HNF-EP-0182).

Both active and passive ventilation systems are used to contain SST airborne particulates. Active ventilation systems (exhausters) are used in the SST farms when the heat load is greater than 11,700 W (40,000 Btu/h) or when studies predict a peak waste temperature greater than operating specifications. The only two SST farms that contain actively ventilated tanks are 241-C and 241-SX. All other SST farms contain tanks that are passively vented to the atmosphere through breather filters.

---

[2]The tanks were built using English units. Most of the conversions in this chapter are from English to metric units.

B2.3.2.1.2 Double-Shell Tanks. As a result of leakage at the SST farms, construction of DSTs started in the late 1960s; these tanks had double steel shells and improved leak detection. Between 1968 and 1986, 28 DSTs were built and situated in 6 tank farms each with 2 to 8 tanks. Five of the tank farms are located in the 200 East Area, and one tank farm is located in the 200 West Area. All DSTs are similar in design and each has a capacity of approximately 3.8 million L (1 million gal). Slight design improvements in the tanks and ancillary equipment were made over the years to accommodate variations in waste composition.

The DSTs were constructed to provide intermediate storage for high-level radioactive waste, including waste capable of boiling due to radioactive decay (aging waste) and waste not capable of boiling (non-aging waste). Waste requiring intermediate storage has come from Hanford Site processing facilities.

Designed to minimize the potential for leakage of radioactive liquids to the environment, each DST consists of a carbon steel primary tank and a carbon steel secondary tank within a protective reinforced concrete shell. The protective concrete shell is designed to sustain soil loads and to tolerate the temperature gradients caused by the heat generated by the contained radioactive waste.

The primary tank contains waste, is freestanding, and stands on an insulated concrete pad. During construction, the insulated pad protected the structural concrete foundation from excessive temperatures during annealing or stress relief treatment of the primary tank. Annealing reduces high-stress points at metal joints to reduce joint susceptibility to corrosion and cracking. The insulating pad is also cast with air distribution and drain grids to provide for leak detection, to maintain a uniform tank bottom temperature, facilitate heat removal, and to eliminate pockets of water condensation.

The insulating pad rests on the secondary tank, which is 1.5 m (5 ft) larger in diameter than the primary tank, creating an air space, or annulus, separating the two steel tank walls. The secondary tank serves as a confinement barrier in case of primary tank leakage.

The DSTs are actively vented (with fan-driven ventilation systems) to the environment. The primary ventilation system removes vapors from the primary tank and cools the waste by convective heat transfer and by the evaporation of moisture. The annulus ventilation system can be used to cool the primary tank, remove moisture accumulation in the annular space, and help detect radioactive leakage. The annular space of each DST is monitored for leaks. To date, none of the Hanford Site DSTs have leaked.

Tank summary data is given in Table B2-3. The DST farms are described in detail in Section B2.4.

B2.3.2.1.3 Ancillary Systems, Facilities, and Equipment. The ancillary systems, facilities, and equipment supporting operations in the SST and DST farms include underground waste transfer pipelines, valves, diversion boxes, jumper connectors, waste transfer pumps, DCRTs, catch tanks, process pits, the 204-AR Waste Unloading Facility, and the 244-AR Vault Facility. These

ancillary systems, facilities, equipment, and other miscellaneous facilities under the control of TWRS are discussed in Section B2.4.

B2.3.2.2 Waste Inventory Generation and Description. Most wastes stored in the Hanford Site underground waste tanks are radioactive slurries generated by reprocessing of irradiated uranium fuel by means of one of the following processes (WHC-MR-0132, *A History of the 200 Area Tank Farms*):

- Bismuth phosphate ($BiPO_4$)
- Reduction oxidation (REDOX)
- Plutonium uranium extraction (PUREX)
- Uranium recovery
- Waste fractionization.

Typical chemical compounds in the wastes produced by each of the processes are listed in Table B2-4. Smaller volumes of wastes were generated by research and development programs, laboratory processes, the "hot semi-works" (pilot plant) for REDOX process, the PUREX pilot (233-5), and Plutonium Finishing Plant operations (WHC-EP-0210, *Waste Characterization Plan for Hanford Site Single-Shell Tanks*).

Since 1944, more than 1,510 million L (400 million gal) of high-level radioactive waste have been generated by these operations and various others. More than 1,140 million L (300 million gal) were directed to the SSTs and DSTs. The remainder of the liquids were discharged to the soil in percolation or evaporating ponds, or by decanting decontaminated (i.e., very low radioactivity) dilute liquid wastes to the ground. Waste volume in the tanks has been reduced to approximately 208 million L (55 million gal) by evaporation, concentration, or both (either in the tanks or externally in evaporators).

All the fuel processing methods generated acidic waste streams. To neutralize the acid and minimize tank corrosion, sodium hydroxide or calcium carbonate was added before the waste was transferred to the tanks. Thus, the tanks contain moderately to strongly alkaline solutions with pH values up to 14. Further post-processing of some of the wastes has resulted in the addition of some organic compounds listed as hazardous (WHC-MR-0132), thereby creating some of the current safety concerns.

Waste stored in the tanks consists primarily of inorganic compounds, including sodium hydroxide; sodium salts of nitrate, nitrite, carbonate, aluminate, and phosphate; and hydrous oxides of aluminum, iron, and manganese. The radioactive components in the waste consist primarily of mixed long-lived fission product radionuclides and actinide elements.

Mixed waste in some underground waste storage tanks may contain heavy metals such as lead, chromium, and cadmium. Detectable amounts of organic

compounds are present. The small portion of waste that is organic (complexed waste) contains the chelating agents EDTA (ethylenediaminetetraacetic acid) and HEDTA (hydroxyethylethylenediaminetriacetic acid) or TBP (tri-butyl phosphate), which was used in fuel processing.

The tanks now contain a mixture of liquid, sludge, and salt cake waste types with both radioactive and chemically toxic hazardous constituents. Liquids exist as supernatant (liquid above solids) and interstitial liquid (liquid filling the void between solids) in the tanks. Sludge consists primarily of solids (hydrous metal oxides) precipitated by the neutralization of acid wastes. Salt cake, generally between the supernatant and sludge, consists of the various salts formed by the evaporation of water from the waste. These waste types do not necessarily exist as distinct layers but rather are intermingled to differing degrees. Some sludges and salt cake contain interstitial liquids and are relatively soft; others are drier and harder. HNF-EP-0182 contains the current volumes of each of these waste types for each waste tank.

B2.3.3 Interfacing Facilities

As discussed in Section B2.1, "Introduction" and identified in Figures B2-1 and B2-2, other facilities within the Hanford Site interface with TWRS facilities. These interfaces are controlled to ensure that these other facilities do not impact TWRS operations (e.g., radionuclide controls are placed on 242-A Evaporator slurry being transferred to 241-AW Tank Farm or TWRS solid waste being transferred to non-TWRS solid waste facilities). Major facilities that interface with the TWRS facilities and that are addressed in the BIO are identified in Table B2-5.

Typical facility interfaces for both liquid and solid waste transfers are shown in Figures B2-5 and B2-6. Specifically, these figures show facility or system physical boundaries: systems or structures belonging to the facility of origin (facility that generates the waste), the waste transfer system, and the facility destination (or facility that receives the waste). Although Figures B2-5 and B2-6 represent facility interfaces between TWRS facilities and other Hanford Site facilities, interfaces between TWRS facilities are similar.

The physical boundaries that are the TWRS interfaces for liquid waste transfers to a TWRS facility are shown in Figure B2-5 and identified in Table B2-5. For example, when PUREX was operational and transferring waste from the PUREX Facility (facility of origin) to the 241-AW Tank Farm (receiving facility), the PUREX Facility managed the transfer line to the 241-A-151 diversion box (junction); the waste transfer system managed the internals of diversion box 241-A-151 and the transfer line to valve pit 241-A-A or 241-A-B (junction); and the 241-AW Tank Farm managed the internals of valve pit 241-AW-A or 241-AW-B and the transfer line to the receiving tank.

The physical boundaries and the TWRS interfaces for liquid and solid waste transfers are shown in Figure B2-6 and identified in Table B2-5. The receiving facility can be another TWRS facility or another Hanford Site facility. For example, during transfers from a TWRS facility (facility of

origin) to solid waste facilities (receiving facility), TWRS is responsible for the waste packaging, a truck transport system is responsible for transportation, and solid waste facilities in the 200 West Area are responsible for waste handling and disposal. Liquid waste transfers between TWRS facilities are depicted in Figure B2-6.

B2.4 FACILITY STRUCTURES

TWRS is a complex of tank farm facilities primarily located in the 200 East and 200 West Areas (Figures B2-1 and B2-2); however, other TWRS facilities, including administrative buildings, retention basins, and transfer lines are located in areas adjacent to the 200 East and 200 West Areas. In addition, some administrative TWRS facilities are located in the nearby city of Richland.

This appendix provides a description of the structures, systems, and components (SSCs) as they were designed and constructed and the intended function of each SSC. The SSCs identified in this chapter provide the hazard and accident analysts a "laundry list" of potential mitigative or preventive barriers for selecting Safety-Class, Safety-Significant, and Defense-in-Depth items. The operability, as defined in the Technical Safety Requirements (TSRs), of many of the active systems within the TWRS facilities and described in the following has not been formally verified using operability tests. However, the TSRs provide the assurance that the selected Safety-Class and Safety-Significant SSCs are and remain operable in accordance with the TSRs. The configuration management program including the maintenance program assures operability of the Defense-in-Depth SSCs.

Field walkdowns were performed at the facility level (i.e., tank farm, building, or miscellaneous facility) to identify which structures currently exist and appear operable. The field walkdowns included an initial document review before the walkdown and a visual inspection of accessible portions of the operating systems. The members of the field walkdown team included system and/or facility cognizant engineers, design authorities, and operations personnel. The field walkdown activity independently verified all TWRS-owned structures or systems and the operability of the structures or systems. The procedure and results of the field walkdowns are documented in WHC-SD-WM-HIE-007, *Tank Waste Remediation FSAR Hazard Identification/Facility Configuration Verification Report*.

The initial document review involved the latest drawings, databases, supporting design documents, procedures, roundsheets, condition assessment reports, and operations specifications or requirements. The design data collected during the document review was visually verified during the walkdown for aboveground structures or systems. Verification of inaccessible portions of a facility or structure (e.g., contents within a valve pit or diversion box) was based on the document review.

System operability was evaluated during the walkdown. This evaluation was qualitative (yes or no) and did not assess system condition. Operability of systems that could not be verified visually were marked "assumed operable," "inoperable," or "unknown," based on the document review and the information provided by members of the field walkdown team.

The data collected during the facility walkdowns is provided in the facility, structure, or systems descriptions, which are described in this appendix.

The following discussion begins with a description of the common structures and systems of SSTs, followed by a description of the specific structures and systems associated with these SSTs. This SST discussion is followed by a comparable discussion of DSTs. The next sections describe other underground storage tanks, including catch tanks and DCRTs; the 204-AR Waste Unloading Facility; the 244-AR Vault; cribs, ditches, and ponds; and storage and handling areas for contaminated materials. Completing the facility description are sections on the waste transfer systems, instrumentation and monitoring systems, cathodic protection systems, interlock systems, and mixer pumps.

B2.4.1 Common Structures and Systems of Single-Shell Tanks

The primary function of an SST is to contain radioactive liquid waste over the lifetime of the facility. SST tanks were designed to contain waste within a reinforced concrete shell with an internal liner (structurally independent from the reinforced concrete tank) of mild carbon steel covering the bottom and sidewalls (Figures B2-7 and B2-8). These tanks are collectively referred to as 100 Series tanks. Of the 149 SSTs, 133 are 23 m (75 ft) in diameter with operating volumes of 2, 2.9, and 3.8 million L (530,000, 758,000, and 1 million gal). Sixteen smaller tanks (called receiver tanks) share the same design as the larger tanks, but are only 6.1 m (20 ft) in diameter and can hold 208,000 L (55,000 gal) each. These tanks are collectively referred to as 200 Series tanks. Table B2-6 provides more details on SST design. Earth cover over each tank provides shielding. Heat generated by radioactive decay is dissipated through the walls and bottom to the surrounding soil.

Most of the 100 Series tanks (2- and 2.9-million L [530,000- and 758,000-gal]) are arranged in "cascades" of three or four tanks in a farm; when the first tank was filled, waste was allowed to overflow into successive tanks through piping in the sidewalls. Each successive tank in the cascade is lower than the previous tank. Therefore, solids settled out in the first or higher tank, and the supernatant was stored in the last tank of the cascade or allowed to overflow to an adjacent crib. Much of the overflow piping between tanks in the various cascades has been removed or blanked. Currently, cascade lines provide an air flow path from a tank not actively ventilated to a tank that is actively ventilated (see 241-C Tank Farm description in Section B2.4.1.5.1).

The design of the common SST elements is discussed in more detail in the following sections. WHC-SD-TWR-RPT-002 provides the limited information available regarding standards or specifications followed during the design and construction of the SSTs.

B2.4.1.1 Concrete Shell. The concrete shell maintains the structural integrity of the steel liner by protecting it from soil loads and provides secondary confinement of the waste material. Each SST shell has a 0.3-m-

(1-ft-) thick concrete base slab, a 0.3-to-0.38-m- (1-to-1.25-ft-) doom roof, and a 0.3-m- (1-ft-) thick cylindrical wall that rests on a circular footing integral with the tank and base slab. The reinforced concrete shells of the larger SSTs, 23 m (75 ft), are cylindrical with domed roofs. The reinforced concrete walls, dome, and base of the shell support the tank surface live loads, static and dynamic soil loads, and hydrostatic and hydrodynamic loads.

The reinforced concrete shells of the 100 Series SSTs are vertical cylinders constructed of reinforced concrete. Each receiver SST shell has a 178-mm- (7-in.-) thick concrete base slab, a 0.3 m- (1-ft-) thick dome, and a 0.3-m- (1-ft-) thick cylindrical wall resting on a circular footing integral with the tank and base slab. The tanks are buried underground to provide radiation shielding.

B2.4.1.2 Steel Liner. All SSTs are constructed of ASTM A 283 Grade C mild steel (except those in the 241-AX Tank Farm, which are ASTM A 201 Grade C). The thickness of each liner varies from 6.4 mm (0.25 in.) to 9.53 mm (0.375 in.). For the 100 Series tanks, the steel liners extend up the tank wall to a height of 5.5, 7.3, and 9.8 m (18, 24, and 32 ft) for the 2, 2.9, and 3.8 million L (530,000; 758,000; and 1 million gal) tanks, respectively. For the smaller 200 Series tanks, the steel liner extends 7.6 m (25 ft) up the tank wall. Waste levels were managed at approximately 0.3 m (1 ft) below the top edge of the liner.

B2.4.1.3 Risers. Each SST has numerous dome risers, which are vertical pipes that penetrate the tank domes to various depths. Almost all the risers are either 102, 305, or 1,070 mm (4, 12, or 42 in.) in diameter. Located either in covered pits at or below ground level, dome risers primarily provide access to the tank interior for a variety of operating and monitoring equipment. This equipment can include periscopes; still and television cameras; ventilation air supply and exhaust ducts; and instruments used to measure or monitor temperature, pressure, specific gravity, liquid levels, dome-space gas levels and concentrations, and sludge (solid) levels. Some risers are reserved as spares. Dome risers are normally capped or covered to prevent uncontrolled intrusion (e.g., rain and personnel) and to prevent releases of radioactive materials. Additional details regarding SST risers can be found in WHC-SD-RE-TI-053, *Riser Configuration Document for Single-Shell Waste Tanks.*

B2.4.1.4 Process and Service Pits. Pumps, monitoring equipment, or transfer systems are typically contained in belowgrade concrete enclosures with removable reinforced concrete cover blocks (i.e., pits, caissons, diversion boxes). The type and number of pits associated with SSTs depend on the type of waste stored and the function of the SST. Therefore, not all pits listed here are present at each tank. Leak detection is provided in the process and service pits used during transfers.

Process pits of the following types handle process solutions.

- **Central pump pit**—located at the center of the SST dome. Waste is normally pumped out of the SST through this pit.
- **Sluice pits**—located over off-center tank risers. A sluice pit is used to route high-pressure liquids to the sluicer assembly.

- **Condenser pit**—located off-center. A condenser pit contains a condenser used to condense tank vapors.
- **Heel pit**—located off-center. A heel pit can be used for equipment installation.
- **Salt well pit**—located off-center. A salt well pit is used for installing salt well pumps and piping.
- **Valve pit**—allows waste to be diverted to pipelines by means of valves, jumpers (temporary piping systems), or both.

Other pits located adjacent to the SSTs in the tank farms do not handle process solutions and therefore are not considered process pits. These pits are as follows.

- **Flush pit**—provides conduit through which water is supplied to flush pipelines after a waste transfer.
- **Leak detection pit** (241-AX Tank Farm only)—provides primary tank leak detection capability.

B2.4.1.5 Ventilation Systems. Both active ventilation and passive ventilation are used for tank venting.

B2.4.1.5.1 Active Ventilation Systems. Air is drawn through a tank and its ventilation system, which may include permanent and temporarily installed systems, by a centrifugal exhaust fan. Air entering a tank is filtered to prevent particulate matter from entering the tank.

Exhaust duct work vents prefiltered air through high-efficiency particulate air (HEPA) filters and the exhaust blower, and then out the stack where the air is sampled for radioactive materials by a continuous air monitor (CAM) and record sampler. Both the inlet and exhaust filters will function as passive ventilation systems upon loss of the exhauster fans.

Each active ventilation system in use at the SST farms is described in the following paragraphs. An active ventilation system was initially installed on Tank 241-A-105, however this system is currently inactive (i.e., not operating) and will not be restarted. Active ventilation is installed on specific tanks within two SST farms (241-C and 241-SX). At these two farms, a centrifugal exhaust fan draws air through the underground tanks, primarily to minimize accumulation of flammable gas. Additionally, an active ventilation system provides a cooling function as a Defense-in-Depth measure. System specifications are given in Table B2-7.

241-C Tank Farm. A skid-mounted, portable exhauster with a centrifugal exhaust fan has been installed for permanent use at Tanks 241-C-105 and 241-C-106 (Figure B2-10). Because of the cascade effect, the blower also indirectly serves Tank 241-C-104. Tanks 241-C-105 and 241-C-106 have air inlet filters. The exhauster draws air from the underground tanks, primarily to cool the tank contents either by convective heat transfer from the waste or by evaporation of moisture. A dedicated system will be used during Tank 241-C-106 sluicing (refer to Addendum 1).

In the 241-C Tank Farm, air enters 0.5-m (1.5-ft) ports in the exhauster plenum and is drawn through an electric heating system and through HEPA filters. The air is then discharged to the atmosphere via a short stack. The discharged air is continuously sampled and monitored for radioactive materials. In addition to the HEPA filters, Tank 241-C-103 has a vapor mixing system designed to mix outside air with headspace gases.

241-SX Tank Farm. The 241-SX Primary Ventilation System cools the waste stored in various underground storage tanks using a stationary, pad-mounted exhauster (Figure B2-11). SSTs 241-SX-101 through 241-SX-112 and 241-SX-114 are ventilated by the exhaust system. Ducting from SSTs 241-SX-101 through 241-SX-106 is connected and routed underground to SST 241-SX-109. SSTs 241-SX-107 through 241-SX-112 and 241-SX-114 are actively ventilated for cooling and are equipped with inlet air filters that include balancing dampers. Air inlet filters in Tanks 241-SX-101 through 241-SX-106 are the same type of breather filter assemblies used for passively ventilated SSTs.

Filtered air is discharged to the atmosphere through exhaust blowers and a short stack. A sampling facility in the stack monitors the air being discharged for radioactive materials. SSTs 241-SX-113 and 241-SX-115 are passively ventilated through HEPA filters to the environment.

B2.4.1.5.2 Passive Ventilation Systems. Passive ventilation systems serve all SSTs except those in Tank Farms 241-C and 241-SX, which have active systems. Passive ventilation means that airflow through the tanks is dictated by differences in atmospheric conditions (e.g., temperature and atmospheric pressure) in and out of the tank.

A breather filter system (Figure B2-9) is used on all tanks with little or no activity or cooling requirements. Each breather filter consists of a housing that contains a HEPA filter, an outlet screen, and a small seal loop. Unmodified breather filters mount on a single spool piece attached to the tank riser. An isolation valve is normally open to permit air flow between the tank vapor space and outside atmosphere through the filter. Air flowing to and from the tank passes horizontally through the filter and then vertically through the downward-facing exit weather hood.

Seal loops installed in the exhaust lines are designed to maintain tank pressures near atmospheric. The seal loops are provided to relieve slight tank overpressurizations when the HEPA filter is plugged or isolated for maintenance. The seal loops are inspected weekly and refilled if required.

B2.4.2 Specific Structures and Systems of Single-Shell Tanks

In the following sections, each SST farm is discussed first for the 200 East Area and then for the 200 West Area. The tank farms within each area are discussed in order of construction from earliest to latest dates. Major systems, facilities, or structures within each tank farm are identified in WHC-SD-WM-HIE-007. In addition, this report provides an assessment of system status and operability.

B2.4.2.1 200 East Area Single-Shell Tanks. The following sections describe the six SST farms located in the 200 East Area.

B2.4.2.1.1 241-B Tank Farm. The 241-B Tank Farm, located north of B Plant on Baltimore Avenue, was built during 1943 and 1944 and was one of the first four tank farms at the Hanford Site. The tank farm includes twelve 23-m- (75-ft-) dia SSTs, each of which can hold 2 million L (530,000 gal). This volume corresponds to a liner height of 5.5 m (18 ft). The 241-B Tank Farm also has four receiver tanks, each 6.1 m (20 ft) in diameter and able to hold 208,000 L (55,000 gal). All 16 SSTs are passively ventilated through HEPA filters to the environment.

Originally, these tanks received waste from B Plant. Later, Tanks 241-B-102, 241-B-103, 241-B-106, 241-B-108, 241-B-109, and 241-B-112 were modified for use as receiver tanks for the In-Tank Solidification and Evaporator Program. Modifications included construction of pump pits, insulation and heat-tracing of transfer lines, and installation of temperature profile equipment. Systems, facilities, and structures associated with the 241-B Tank Farm are listed in WHC-SD-WM-HIE-007.

B2.4.2.1.2 241-C Tank Farm. The 241-C Tank Farm, located north of the PUREX Facility and just northwest of the 241-AN Tank Farm, was constructed during 1943 and 1944. The 241-C Tank Farm has twelve 2 million-L (530,000-gal) SSTs (241-C-101 to 241-C-112) measuring 23 m (75 ft) in diameter and four 208,000-L (55,000-gal) receiver tanks (241-C-201 to 241-C-204) measuring 6.1 m (20 ft) in diameter. The 23-m- (75-ft-) dia SSTs are arranged in four cascades of three tanks each. These tanks received waste from B Plant. SSTs 241-C-105 and 241-C-106 (and indirectly 241-C-104) are actively ventilated; these tanks are connected to a common operating exhaust system (Section B2.4.1.5.1). All other tanks within the 241-C Tank Farm are passively ventilated through HEPA filters to the environment. Systems, related facilities, or structures associated with the 241-C Tank Farm are listed in WHC-SD-WM-HIE-007.

B2.4.2.1.3 241-BX Tank Farm. SSTs in the 241-BX Tank Farm, located north of B Plant, were constructed during 1946 and 1947 according to the original tank design for 241-B Tank Farm. The twelve 2 million-L (530,000-gal) SSTs are arranged in four cascades of three tanks each. These tanks received waste from B Plant. None of the 241-BX SSTs are connected to an operating exhaust system. All are passively ventilated through HEPA filters to the environment. Systems, facilities, and structures associated with the 241-BX Tank Farm are listed in WHC-SD-WM-HIE-007.

B2.4.2.1.4 241-BY Tank Farm. The 241-BY Tank Farm, located north of B Plant, was built from 1948 to 1949 according to a modified 241-B Tank Farm design. Each of the 12 tanks can hold 2.9 million L (758,000 gal). This corresponds to a 7.3-m (24-ft) liner height, versus 5.5 m (18 ft) for the original design. These tanks received waste from B Plant and are passively ventilated through HEPA filters to the environment. Systems, facilities, and structures associated with the 241-BY Tank Farm are listed in WHC-SD-WM-HIE-007.

B2.4.2.1.5 241-A Tank Farm. The 241-A Tank Farm, located directly north of the 242-A Evaporator, was constructed during 1954 and 1955. Each of the

six SSTs can hold 3.8 million L (1 million gal). None of the SSTs in the 241-A Tank Farm have received waste since November 1980. Originally, these tanks received boiling waste from the PUREX Facility. All tanks within the 241-A Tank Farm are passively ventilated through HEPA filters to the environment (Section B2.4.1.5.2). Systems, related facilities, or structures associated with the 241-A Tank Farm are listed in WHC-SD-WM-HIE-007.

B2.4.2.1.6 241-AX Tank Farm. The 241-AX Tank Farm, located north of the 241-A Tank Farm and east of the 241-AY Tank Farm, was constructed during 1963 and 1964. This tank farm contains four SSTs, each with a capacity of 3.8 million L (1 million gal) and similar in basic construction to SSTs in the 241-A Tank Farm. These four SSTs are 23 m (75 ft) in diameter with 9.8-m- (32-ft-) high liners. In these tanks, a grid of drainage slots was added beneath the steel-lined bottoms. Any leakage through the tank liner enters drainage slots in the concrete pads and then flows to an adjacent leak-detection pit. These tanks received boiling waste from the PUREX Facility and are passively ventilated through HEPA filters to the environment. Systems, related facilities, and structures associated with the 241-AX Tank Farm are listed in WHC-SD-WM-HIE-007.

B2.4.2.2 200 West Area Single-Shell Tanks. The following sections describe the six SST farms located in the 200 West Area.

B2.4.2.2.1 241-T Tank Farm. The 241-T Tank Farm is located directly west of the T Plant. The 241-T Tank Farm was constructed from 1943 to 1944 and contains 16 SSTs. Twelve of the SSTs are 23 m (75 ft) in diameter, have 5.5-m- (18-ft-) high liners, and can hold 2 million L (530,000 gal). Four of the SSTs are 6.1-m- (20-ft-) dia receiver tanks that can hold 208,000 L (55,000 gal). The 23-m- (75-ft-) dia tanks are arranged in four cascades of three tanks each. The 241-T Tank Farm received bismuth phosphate wastes from T Plant. All the SSTs at this tank farm are passively ventilated through HEPA filters to the environment. Systems, facilities, and structures associated with the 241-T Tank Farm are listed in WHC-SD-WM-HIE-007.

B2.4.2.2.2 241-U Tank Farm. The 241-U Tank Farm, located directly west of U Plant, was constructed from 1943 to 1944. The 241-U Tank Farm contains 16 SSTs. Twelve of the SSTs can hold 2 million L (530,000 gal) and are 23 m (75 ft) in diameter with 5.5-m- (18-ft-) high liners. Four of the SSTs are 6.1-m- (20-ft-) dia receiver tanks that can hold 208,000 L (55,000 gal). SSTs in the 241-U Tank Farm received slurry from the 242-S Evaporator. These tanks are passively ventilated through HEPA filters to the environment. Systems, facilities, and structures associated with the 241-U Tank Farm are listed in WHC-SD-WM-HIE-007.

B2.4.2.2.3 241-TX Tank Farm. The 241-TX Tank Farm, located south of the 241-T Tank Farm, was constructed from 1947 to 1948 according to a modified 241-B Tank Farm design. The 18 SSTs in the 241-TX Tank Farm are essentially the same as the original B Tank Farm design except for increased capacity (from 2 million to 2.9 million L [530,000 to 758,000 gal]) achieved by increasing the liner height from 5.5 to 7.3 m (18 to 24 ft). The 241-TX Tank Farm received slurry from the 242-T Evaporator. The SSTs in the 241-TX Tank Farm are passively ventilated through HEPA filters to the environment. Systems, facilities, and structures associated with the 241-TX Tank Farm are listed in WHC-SD-WM-HIE-007.

B2.4.2.2.4 241-S Tank Farm. The 214-S Tank Farm is located on 13th Street, northwest of S Plant (the REDOX Plant), was constructed during 1950 and 1951 and consists of twelve 2.9 million-L (758,000-gal) SSTs. The SSTs were constructed according to the same design as the original 23-m-(75-ft-) dia SSTs, but with an increased liner height (from 5.5 to 7.3 m [18 to 24 ft]). The 241-S Tank Farm received several types of REDOX Plant wastes in all four cascades. These SSTs are passively ventilated through HEPA filters to the environment. Systems, related facilities, or structures associated with the 241-S Tank Farm are listed in WHC-SD-WM-HIE-007.

B2.4.2.2.5 241-TY Tank Farm. The 241-TY Tank Farm is located north of the 241-TX Tank Farm and was constructed during 1951 and 1952. All six SSTs can hold 2.9 million L (758,000 gal) and are of the same design as the tanks in the 241-TX Tank Farm. The 241-TY Tank Farm SSTs were used to settle and decant low-level wastes from T Plant and also to store the 242-T Evaporator feed. The 241-TY Tank Farm SSTs are passively ventilated through HEPA filters to the environment. Systems, facilities, and structures associated with the 241-TY Tank Farm are listed in WHC-SD-WM-HIE-007.

B2.4.2.2.6 241-SX Tank Farm. The 241-SX Tank Farm is located south of the 241-S Tank Farm and was constructed during 1953 and 1954. Each of the 15 SSTs in this tank farm can hold 3.8 million L (1 million gal). These were the first tanks designed to contain self-boiling waste. Only SSTs SX-113 and SX-115 are passively ventilated through HEPA filters to the environment. All other tanks within the 241-SX Tank Farm are actively ventilated to the environment as described in Section B2.4.1.5.1. Systems, related facilities, and structures associated with the 241-SX Tank Farm are listed in WHC-SD-WM-HIE-007.

B2.4.3 Common Structures and Systems of Double-Shell Tanks

Twenty-eight DSTs are located in six tank farms, five farms in 200 East Area and one farm in 200 West Area. As shown in Figures B2-12 and B2-13, DSTs consist of a carbon steel primary tank and a carbon steel secondary tank encased by a protective reinforced concrete shell. Dimensions for the tanks located in each of the six farms are given in Table B2-8.

The primary safety function of DSTs is to confine radioactive liquid waste over the lifetime of the facility. These confinement features are discussed in the following sections. The design codes and standards followed during construction of the tanks are provided in WHC-SD-TWR-RPT-002, and the design and operational parameters that are important to ensure continued operation of the tanks are summarized in Table B2-9.

B2.4.3.1 Primary Tank. The carbon steel primary tank is a free-standing, completely enclosed structure that contains and confines the waste. The primary tank measures 23 m (75 ft) in diameter and is 14.25 m (46.75 ft) high at the dome center. The nominal storage capacity is 3.8 million L (1 million gal) at a liquid level of 9.20 m (30.2 ft). The maximum storage capacity is 4.4 million L (1.16 million gal) at a liquid level of 10.7 m (35.2 ft).

A 25-mm- (1-in.-) thick steel plate 1.2 m (4 ft) in diameter is located at the center of the tank bottom. The plate gradually thins to 13 mm (0.5 in.) and extends to a curved, or formed, piece of the steel plate called the "knuckle" (where the tank bottom joins the tank wall). The knuckle plate is 22.2 mm (0.875 in.) thick.

The wall plates gradually thin from 22.2 mm (0.875 in.) at the knuckle to 19 mm (0.75 in.) to 15.9 mm (0.625 in.) to 13 mm (0.5 in.) and finally to 9.53 mm (0.375 in.). The wall meets the tank dome at the "haunch" junction. The haunch and most of the dome are formed of 9.53-mm- (0.375-in.-) thick steel plate. The exact dome center is a 13-mm- (0.5-in.-) thick circular plate 3.7 m (12 ft) in diameter.

Because high-stress points at weld joints are susceptible to corrosion and cracking, the primary tank was subjected in place to post-fabrication stress relief treatment.

B2.4.3.2 Concrete Support Pad. The primary tank sits on an 203-mm- (8-in.-) thick insulating concrete support pad located between the primary and secondary tank floors. During construction, the pad protected the external structural concrete foundation from excessive temperatures during the thermal stress relief of the primary shell. The pad was cast with air distribution and drain slots in a grid pattern. During regular tank operation, the pad establishes a uniform tank bottom temperature, provides a means of heat removal, provides a means of leak detection, and helps eliminate pockets of water condensation.

To provide cooling, air is drawn through the drain slots via the annulus ventilation system (Section B2.4.3.7, "Ventilation Systems"). The drain slots allow any leakage from the primary tank to drain into the annular space, where conductivity leak detection instrumentation is installed in annulus risers.

B2.4.3.3 Secondary Tank. The floor of the secondary tank (sometimes called a liner) lies beneath the insulating concrete pad and is built directly on top of the concrete foundation. This secondary tank is 1.5 m (5 ft) larger in diameter than the primary tank, which forms a 0.76-m- (2.5-ft-) wide annular space between the primary and secondary tanks. The secondary tank joins the primary tank dome at the upper haunch area, and these two tanks are enclosed in a reinforced concrete shell. The secondary tank provides a second confinement barrier for potential primary tank leaks, thus preventing uncontrolled releases of waste to the environment.

The secondary tank extends along the bottom, side, and upper haunch of the concrete shell. The secondary liner is roughly 12 m (40 ft) high and constructed of carbon steel plates varying in thickness from 9.53 mm (0.375 in.) to 13 mm (0.5 in.). The liner bottom is constructed of 9.53-mm (0.375-in.) steel plate. The secondary liner knuckle is made of a 13-mm (0.5-in.) steel plate that extends about 0.6 m (2 ft) from the floor and is welded to 9.53-mm (0.375-in.) wall plates. The secondary liner was not stress-relieved after construction and thus is not designed for long-term confinement of waste leaking from the primary tank.

Induced-draft ventilation of the annulus between the primary and secondary tank liners removes decay heat from the stored waste. Radiation

detectors in the annulus ventilation exhaust stream are provided to detect airborne radioactivity resulting from primary tank leakage.

B2.4.3.4 Concrete Shell. The exterior concrete shell is composed of a foundation, walls, and a dome that completely encloses the secondary tank and primary tank dome. This shell is designed to support soil loading, dead loads, live loads (equipment, personnel), and seismic loads. The 27-m- (89-ft-) dia, steel-reinforced shell rests on a separate structural concrete foundation. The 0.46-m- (1.5-ft-) thick shell concrete walls rest on steel slide plates supported by the tank foundation. The 0.38-m- (1.25-ft-) thick concrete dome and the walls contain a lattice of reinforcement bars and embedded J-bolts. The J-bolts are threaded into nuts welded to the steel tank walls and dome.

The structural concrete foundation, which is 27.23 m (89.33 ft) in diameter, evenly distributes all weight loads uniformly to the ground below. The circular center portion of the foundation is 1.8 m (6 ft) in diameter and 0.6 m (2 ft) thick. From the circular center portion, foundation thickness tapers to 0.3 m (1 ft) and expands again to 0.84 m (2.75 ft) at the outer edge.

The structural foundation contains drain lines and sumps to collect leakage from the secondary liner. The top of the concrete foundation contains slots to drain any liquid that might leak from the secondary tank (actually, a tertiary leak detection and collection system). Any liquid that reached the foundation would drain through the slots to a leak detection well.

B2.4.3.5 Risers. Each tank is equipped with riser pipes that penetrate the concrete dome and the top of the primary or secondary tank. The risers provide access to the primary tank and to the annulus space for waste transfer operations, equipment installation or use, and monitoring. Some risers are located in covered pits (e.g., central pump pits, annulus pump pits, and drain pits); others are located at specific predetermined locations at each tank.

Primary tank dome risers can be used to enable liquid and sludge sampling and also for instrument access to measure temperature and pressure, derive specific gravity, monitor liquid and sludge levels, and ventilate and pump the tank.

Annulus risers provide access for inspection and enable the introduction of liquid leak detection instruments, annulus pumps, periscopes, still and television cameras, ventilation air supply and exhaust ducts, and temperature monitors. Additional details regarding DST risers can be found in WHC-SD-RE-TI-093, *Double-Shell Underground Waste Storage Tank-Riser Survey*.

B2.4.3.6 Pits. Pits provide access from the surface to process piping and tank risers and are the points where jumpers (temporary piping systems), pumps, and other equipment are installed to establish waste transfer routings. Pump pits are constructed of reinforced concrete walls and floors located belowgrade and are provided with removable reinforced concrete cover blocks located approximately at grade elevation. Personnel are protected from radiation by the 508-mm- (20-in.-) thick cover blocks. The configuration of the piping in the pit is painted on the cover blocks to show the operator the

routing of the liquid waste and the valve positions. Leak detection is provided in all pits used during transfers.

Permanently installed pumps are used to remove liquid waste from primary tanks, and temporary pumps are used to remove liquid waste from annuli and leak detection pits. Spare pumps can be used for either purpose. However, pumps that become contaminated during a transfer operation in a particular pit may remain permanently in that pit.

B2.4.3.6.1 Central Pump Pits. Central pump pits, which are approximately centered on the tanks, have three purposes: (1) supernatant filling or removal, (2) slurry distribution, and (3) mixer pump installation. Central pump pits typically measure approximately 2.1 m (7 ft) square by 2.51 m (8.25 ft) deep. A typical central pump or distributor pit is illustrated in Figure B2-14.

Supernatant filling is accomplished through piping or jumpers (temporary piping systems) connected to a riser. For supernatant removal, central pump pits are designed to hold a deep-well turbine pump and piping or jumpers. In tanks without pumps, dummy pump heads are installed on the pump flange to support the supernatant pump-out (and fill) jumper. Central pump pits for receiver tanks that store slurry are equipped with slurry distributors (Figure B2-15).

During filling operations, a slurry distributor disperses the slurry evenly within the tank. The pump pit cover block is marked with a distributor-indexing diagram so that the distributor may be set at any given position from an established zero-degree reference point. The zero-degree position for the distributor points directly at the level instrument assembly. Two "Do Not Slurry" zones appear on each slurry distributor indexing diagram. One zone, at the indicated zero-degree position, protects the level instrument; the other zone prevents slurry from being sprayed directly under the tank ventilation outlet.

A central pump pit on Tank SY-101 houses the mixer pump that mixes tank contents.

B2.4.3.6.2 Annulus Pump Pits. Annulus pump pits, located over annulus risers, provide a means for pumping out any liquids that may accumulate in the annular space from a primary tank leak. A typical annulus pump pit is shown in Figure B2-16.

Annulus pump pits typically measure approximately 2.1 m (7 ft) square by 3.53 m (11.58 ft) deep with 0.3-m- (1-ft-) thick concrete walls. Annulus pump pits are covered with a 0.51-m- (20-in.-) thick concrete cover block. A shielding plug on a small leak detector assembly access hole in the cover block may be removed for observation purposes. The entire cover block, however, must be removed to obtain access to the leak detector.

In most instances, deep-well vertical turbine pumps will be installed as needed in annulus pump pits. The pump is lowered into position after a blind flange is removed. A rigid jumper assembly connects the pump outlet to a 51-mm (2-in.) process waste line enclosed in a 102-mm (4-in.) encasement. The encasement slopes to drain the encasement pipe toward the annulus pump pit.

The process waste line terminates at the central pump pit of the tank. The waste may then be pumped to a suitable tank through the existing transfer piping.

B2.4.3.6.3 Feed Pump Pits. Feed pump pits are located off center on Tanks 241-AW-102, 241-AP-102, and 241-SY-102 to provide a means of pumping the tank contents to a processing facility such as the 242-A Evaporator. Feed pump pits typically measure approximately 2.1 m (7 ft) square by 2.51 m (8.25 ft) deep with 0.3-m- (1-ft-) thick reinforced concrete walls and 0.51-m- (20-in.-) thick concrete cover blocks. A typical feed pump pit is shown in Figure B2-17.

B2.4.3.6.4 Leak Detection Pits. Leak detection pits installed in all DST farms house level indicators and leak-monitoring instruments and collect liquid from the drainage grid at the top of the concrete foundation (upon which the secondary liner bottom rests). Each pit is fabricated as two parts: (1) a leak detection well and pump pit and (2) a 152-mm- (6-in.-) dia radiation detection pit with dry well (Figure B2-18). A leak detection pit is normally located adjacent to each tank annulus. The 241-AP Tank Farm, however, only has two pits; each pit collects drainage from four tanks.

The leak detection pit (including the adjacent radiation detection pit) may be ventilated through a 51-mm- (2-in.-) dia ventilation line connected to the tank annulus ventilation system by opening an in-line ball valve with a T-handle. The T-handle extends about 0.9 m (3 ft) abovegrade, near the leak detection pump pit. Ventilation is unnecessary, however, unless the leak detection pits are contaminated.

Leak detection well and pump pits are 2.1 m (7 ft) square by 3.23 m (10.58 ft) deep with 0.3-m- (1-ft-) thick concrete floors and walls. A 0.51-m- (20-in.-) thick concrete cover block fits over the well and pump pit. The leak detection well floor is typically 19.15 m (62.83 ft) belowgrade. Below the top of the cover block at approximately 18 m (58 ft), a 152-mm (6-in.) encased drainpipe connects the leak detection well to the tank foundation for liquid collection. Depending upon the tank farm, the liquid can be pumped back into the primary tank, which is approximately 3.7 m (12 ft) from the pit, or through process piping to a designated receiver tank.

The radiation dry well (through which radiation detection probes are inserted as part of the leak detection system) is 152 mm (6 in.) in diameter and terminates adjacent to the bottom of the leak detection well. The radiation dry well is accessed through a pit adjacent to the pump pit. This access pit is 1.17 m (3.83 ft) long by 0.71 m (2.33 ft) wide by 0.69 m (2.25 ft) deep and is covered with a steel or sheet metal cover that is removed by using retractable lifting bails. The radiation well access pit drains into the leak detection pump pit, which then drains to the leak detection well.

B2.4.3.6.5 Drain Pits. Drain pits are located over an off-center primary tank riser on Tanks 241-AW-102 and 241-SY-102 to provide a means for returning fluids to the tank. Drain pits typically measure approximately 2.4 by 2.1 m (8 by 7 ft) by 3.53 m (11.58 ft) deep with 0.3-m- (1-ft-) thick walls and are covered with a 0.51-m- (20-in.-) thick concrete cover block. A typical drain pit is shown in Figure B2-19.

B2.4.3.6.6 Sluice Pits. A sluice pit is a reinforced concrete pit through which high-pressure liquids are routed to the sluicer assembly. Sluice pits are typically 4.3 m square by 3.84 m deep (14 ft square by 12.6 ft deep). These pits are located over off-center primary tank risers on DSTs 241-AY-102, 241-AY-101, 241-AZ-101, and 241-AZ-102. The pits provide a means of injecting a high-pressure liquid stream directly into the sludge so that the sludge may be broken up, removed, and transferred to another tank.

In 241-AY Tank Farm, Tank 241-AY-101 has four sluice pits and Tank 241-AY-102 has three sluice pits. 241-AZ Tank Farm is equipped with two sluice pits per tank and a central sluice transfer diversion box, 241-AZ-152.

B2.4.3.7 Ventilation Systems. All DST ventilation systems consist of both a primary ventilation system and an annulus ventilation system. The combined annulus and primary tank ventilation systems for the AN, AP, AW, and SY tank farms can remove up to 29,000 W (100,000 Btu/h). The 241-A-702 Ventilation System for the AY and AZ tank farms has three large condensers in the 241-A-401 Building, each designed for removing up to 5,860,000 W (20,000,000 Btu/h). The 241-AZ-702 Ventilation System is the new ventilation system for the AZ and AY tank farms and it replaces the 241-A-702 Ventilation System. See Addendum 3 for the facility description and system operation details for 241-AZ-702. The 241-A-702 Ventilation System has been isolated. The main functions of primary ventilation are as follows.

- Remove radioactive decay heat from the primary tank by removing water vapors from the tank headspace.
- Confine stored materials by maintaining vacuum conditions within the tank. The primary method of contamination control for the DSTs is confinement.
- Provide deentrainment of liquid droplets from condensed water vapor.
- Remove radioactive particulate materials from gaseous effluent.
- Control gaseous emissions with dilution air.

The primary tank ventilation system filters and removes moisture from tank exhaust vapor before the vapor is discharged to the atmosphere. The primary tank ventilation system maintains a negative pressure on the tanks. Confinement of airborne radioactive materials is thus ensured. The primary tank ventilation system can handle offgas with as much as 100% humidity. A breakdown of the primary ventilation system airflow rates for DST farms is provided in Table B2-10.

The annulus ventilation system can be used for both cooling and leak detection.

Instrumentation for both primary and annulus ventilation systems is abovegrade and is located at the exhaust unit or in the instrument building. All primary ventilation, instrumentation, duct work drains, and seal pots are protected from freezing weather. Shielding is provided for the demister, preheater, and filter assembly of each primary tank system.

B2.4.3.7.1 241-AY and 241-AZ (Aging Waste Facility) Tank Farm Ventilation Systems.

B2.4.3.7.1.1 241-AZ-702 Primary Ventilation System. See Addendum 3 for description of the primary tank ventilation system for the Aging Waste Facility.

B2.4.3.7.1.2 241-A-702 Primary Ventilation System. The 241-A-702 Primary Ventilation System (Figure B2-20) has been isolated. This system previously provided primary tank ventilation for the four aging waste facility (AWF) tanks (241-AY-101, 241-AY-102, 241-AZ-101, and 241-AZ-102) and for the 241-AX-152 diverter station. Several other miscellaneous structures (e.g., the 241-AZ-151 and 241-AZ-154 catch tanks) were ventilated indirectly through waste transfer lines. A backup ventilation system (Figure B2-20) was available when necessary. Table B2-10 provides summary information on the AWF ventilation systems.

The primary ventilation system was designed specifically for PUREX-generated aging waste (or boiling waste), which is exceptionally "hot," both thermally and radiologically.

The headspace in the AWF tanks contains water vapor and entrained radioactive particulate matter generated by the stored waste. These vapors mix with air from operating air lift circulators, instrument air purges, and direct atmospheric inleakage through pit cover blocks and risers. Vapor can also be generated by radiolytic heat converting water to steam and by natural convection currents from thermal gradients. In addition to providing a confinement function, this system maintained the temperature of the liquid in the tanks by removing heat released through such vaporization processes.

241-A-702 Ventilation System Operation. Air is introduced into an AWF tank headspace through air lift circulators and air purge instruments. Also, outside air is drawn into the tank through pit cover blocks and risers due to the vacuum created by the exhaust blower. Two 1,899 L/s (4,000-cfm) exhausters (blowers) operate one at a time to draw the gases through an extensive particle and condensate removal system before discharging the gases to the atmosphere. Vapor is exhausted through a single 508-mm- (20-in.-) dia duct on each AWF tank and continues through individual tank-seal loops to a common 610-mm (24-in.) vent header.

The vapor stream proceeds through a section of 0.46-m- (1.5-ft-) dia steel pipe before passing through the 0.6-m- (2-ft-) dia seal loop to the K1-5-1 deentrainer. After passing through the K1-5-1 deentrainer, the vapor stream continues along the vent header through the vent header extension seal loop and enters the hot-pipe gallery of the 241-A-401 Surface Condenser Building. Three condensers (two in operation at a time) for removing moisture from the exhaust system are located in this building. The offgases from the three surface condensers are vented through a second deentrainer (K1-5-2A) before entering the 241-A-702 Ventilation Building.

The vapor stream then continues into the K1-3-1 steam heater housing (not in service) before reaching the filter banks. The ventilation ducts routed from the K1-3-1 steam heater housing extend through the floor of the filter side of 241-A-702 and exit through a wall on the blower side of

241-A-702 Building into a common 0.2 m^2 (2 ft^2) plenum that feeds one of the two 241-A-702 exhaust blowers. Twelve HEPA filters, in six banks, simultaneously filter the exhaust air flowing through the 241-A-702 Primary Ventilation System.

After filtration, the vapor stream from each set of filters enters a plenum and then passes through one of two 0.41-m- (1.33-ft-) dia stainless steel ducts, depending upon which blower is operating. Vapor is discharged by the blower into the atmosphere via the 0.46-m- (1.5-ft-) dia stainless steel exhaust stack. To control the volume of air being drawn off the tanks, a portion of the exhaust vapor is recirculated from the stack to the plenum through a manually controlled butterfly valve. This modification eliminated the need to replace (downsize) the blowers when two SST farms (241-A and 241-AX) were removed from the system. A CAM monitors effluent radioactivity levels, and a record sampler collects representative samples before the vapor stream is discharged to the atmosphere.

Two 203-mm (8-in.) cross-tie valves are located in a caisson near each tank. The primary purpose of these cross-ties is to allow the primary ventilation system to ventilate the annuli of the tanks. The vent system transfer can be performed by opening the two manual cross-tie valves in the caisson located near the desired tank. These valves connect the primary ventilation piping to the associated annulus downstream of each primary tank.

The 241-A-702 Backup Ventilation System confines radioactivity when the 241-A-702 system is shut down, for example, when K1-1-1 and K1-1-2 exhaust fans are shut down. Manual shutdown of 241-A-702 Primary Ventilation System caused by a verified exhaust high-radiation alarm will also require operation of the backup exhauster (Figure B2-20).

Additionally, should both 241-A-702 primary blowers fail to provide the required 0.37 kPa (1.5-in. water gauge [WG]) vacuum (as measured by the K1-5-1 deentrainer inlet vacuum gauge) for the AWF tanks, the backup exhauster has a sequencing system designed to start automatically.

During backup exhauster operation, vapor is drawn through the butterfly valve and into the plenum of the exhauster system by a centrifugal exhaust blower. The vapor continues through a heater, which is capable of raising the temperature of saturated vapor. The heated vapor stream passes through two banks of four HEPA filters each and then out the stack, which is equipped with a CAM.

B2.4.3.7.1.3 241-AZ and 241-AY (Aging Waste Facility) Annulus Ventilation Systems. Each of the 241-AY AWF tanks has its own annulus ventilation system. The 241-AZ Annulus Ventilation System is similar in function and design except that AZ tanks are served by a common annulus ventilation system and share an annulus exhauster. To prevent contamination of the annulus should a leak path develop between the annulus and the primary tank headspace, the controls maintain a positive pressure in the annulus with respect to the primary tank headspace pressure. The following describes the 241-AY Annulus Ventilation System, which is depicted in Figure B2-21.

The exhaust fan draws outside air into each ventilation unit through louver inlets. To prevent frost damage to the supply filters, radiant heaters

are mounted inside each louver inlet. The air is then filtered through banks of HEPA filters. The filtered air continues through a supply air heater before entering the annulus. The air then passes through a manual butterfly valve and into the annular space via underground duct work. The air is distributed between the side of the annulus and a central air distribution chamber below the primary tank. An exception to this configuration is the system on Tank 241-AY-102, which has been modified to distribute air only to the central air distribution chamber below the tank (refer to Addendum 1). Exhaust air is then drawn out of the annulus through ducts that merge into a common underground duct, called the vent header. One vent header from each tank rises aboveground to a separate HEPA filter housing for each tank. As the air exits the header, a vacuum pump extracts an air sample and feeds it to a CAM. The exhaust air continues through an automatically controlled electric heater. The air then passes through another manual butterfly valve and through two filter housings, each containing four HEPA filters. The HEPA filters are aerosol tested annually to ensure that 99.95% efficiency is maintained. Filtered air exits the ventilation system through the exhaust blower and stack and is released to the environment.

B2.4.3.7.2 241-AN, 241-AP, 241-AW, and 241-SY Tank Farm Ventilation Systems. The primary ventilation systems for DST farms 241-AN, 241-AP, and 241-AW are essentially identical (Figure B2-22). The only differences among these systems are in blower capacities and resulting tank airflow rates and in the efficiency rating of prefilters. The primary tank ventilation system filters and removes moisture from tank exhaust vapor before the vapor is discharged to the atmosphere. The primary ventilation system for 241-SY Tank Farm is slightly different from that of the other three tank farms and is addressed following the main ventilation discussion. In the discussion of the annulus ventilation system, the systems for 241-AN and 241-AW tank farms are discussed together because they are very similar; the annulus ventilation systems for the 241-AP and 241-SY tank farms are then discussed in turn.

Primary Tank Ventilation System. The primary ventilation system for all four tank farms is a dual system. Under normal operating conditions, only one of the dual systems operates at a time. The other unit provides backup support in case of equipment failure or HEPA filter changes.

Outside air is drawn into the tank through inlet filters, or pit cover blocks, or risers due to the vacuum created by the exhaust blower. Also, air is introduced into the tank headspace through operating air lift circulators (241-AW-102) and air purge instruments. Air is drawn out of the tank through a 305-mm- (12-in.-) dia duct and into a belowgrade exhaust header. Primary tank exhaust ducts have air volume control butterfly valves located in vent pits. After leaving the ventilation pits, exhaust ducts combine into one 406-mm- (16-in.-) dia duct. The exhaust header terminates at the primary K1 exhauster unit located on the primary ventilation pad.

At the primary ventilation pad, the air initially passes through a demister consisting of a wire-mesh pad that separates heavy moisture particles from the airstream and then through one of two motor-operated valves. Valve positions are controlled automatically by differential pressure switches that measure differential pressure across the blowers. The air then passes through an electric heater, which vaporizes the remaining moisture.

The dry, heated air is prefiltered to remove particulates. Next, two HEPA filters mounted in series remove particulates as small as 0.3 μ with at least 99.95% efficiency. Smaller particles can be trapped by the filter, but the filter is not rated for any particle smaller than 0.3 μ. Two differential pressure indicators across the HEPA filters monitor operating conditions. Low differential pressure indicates low air flow or a failed filter. High differential pressure indicates blockage caused by accumulated solids or possibly ice formation on the filters.

After passing through the filters, the air is drawn through a K1 blower and exhausted out the K1 stack. A CAM monitors effluent radioactivity levels and a record sampler collects representative samples before the air is discharged to the atmosphere. If an exhaust fan in the operating system fails, the backup ventilation system blower starts automatically. Under normal operating conditions, one of the K1 demisters is valved in and the opposite demister is valved out.

The 241-SY Ventilation System is entirely abovegrade. All 241-SY DSTs receive air through dual HEPA filter inlets. The airflow exhausted from each tank to the primary ventilation system is combined into a 0.3-m- (1-ft-) dia duct and then routed to either the normal exhauster train or the backup portable exhauster train. The normal exhauster train consists of a demister, a prefilter, two HEPA filter housings, a fan, a flow meter, and an exhaust stack. The normal exhauster fan is designed to handle an airflow rate of 330 L/s (700 cfm). The backup exhauster train also consists of a demister, a prefilter, two HEPA filter housings, a fan, and an exhaust stack. The backup exhauster is designed to handle an airflow rate of 472 L/s (1,000 cfm) and must be started manually.

Annulus Ventilation System. The annulus ventilation systems for DST farms 241-AN and 241-AW are very similar (Figure B2-23). The air intake to the annulus of each tank is designed for 378 L/s (800 cfm), and the air is routed through a 35%-efficiency prefilter and a nontestable, self-contained HEPA filter before being supplied to the annulus air distribution channels of each tank. The airflow exhausted from the annulus of each tank is combined and then routed through the two exhaust trains, each of which consists of a demister, an electric heater, two HEPA filter housings, and a fan, before being exhausted from a stack to the atmosphere. The annulus ventilation systems for DST farms 241-AN and 241-AW are designed to handle approximately total airflow rates of 2,891 L/s (6,125 cfm) and 2,478 L/s (5,250 cfm), respectively.

The 241-AP Annulus Ventilation System is similar to that of 241-AN with some differences (Figure B2-23). For example, the air intake to the annulus of each tank has a capacity of 507 L/s (1,075 cfm) as compared with 401 L/s (850 cfm) for the 241-AN system. To prevent ice formation on the filters, the 241-AP annulus air intake includes a heater to warm the incoming air. The air then passes through a 35%-efficiency prefilter and a HEPA filter before being supplied to the annulus air distribution channels of each tank. The airflow exhausted from the annulus of each tank is combined and then routed through one of two exhaust trains before being exhausted from a stack to the atmosphere. Each train consists of an electric heater, two HEPA filter housings, and a blower. The blower is designed to provide a total airflow rate of 4,060 L/s (8,600 cfm) through the annulus system.

The entire annulus ventilation system for the 241-SY Tank Farm is abovegrade. Air intakes to the annulus of each tank are designed for a total of 94.4 L/s (200 cfm). Intake air originates from four intake stations per tank. Each station consists of two cylindrical filter housings. These intakes are routed to the air distribution channels of each tank. Another intake, which has a single cylindrical filter housing, is routed directly into the annulus vent space. This additional intake is typically isolated from the tank annulus. The airflow exhausted from the annulus of each tank is combined and then routed through a single exhaust train before being exhausted from a stack to the atmosphere. The exhaust train consists of a moisture eliminator, a prefilter, two HEPA filter housings, and a blower. The blower is designed to provide a total airflow rate of 354 L/s (750 cfm) through the annulus system.

B2.4.4 Specific Structures and Systems of Double-Shell Tanks

In the following sections, each of the DST farms is discussed in order of construction date from earliest to latest. All DSTs are actively ventilated, and tank design is summarized in Table B2-9. The codes and standards used to design and construct the DSTs are provided in WHC-SD-TWR-RPT-002. Major systems, facilities, or structures within the tank farm, as well as system status and operability, are identified in WHC-SD-WM-HIE-007.

B2.4.4.1 200 East Area Double-Shell Tanks. The following sections describe the five tank farms located in 200 East Area.

B2.4.4.1.1 241-AY and 241-AZ Tank Farms (Aging Waste Facility). The AWF, located northeast of the PUREX Facility, was constructed between 1968 and 1977. The AWF tank farms (241-AY and 241-AZ) consist of four tanks (241-AY-101, 241-AY-102, 241-AZ-101, and 241-AZ-102) each of which can hold 3.8 million L (1 million gal). The tanks, with the exception of 241-AY-102, received aging waste from the PUREX Facility. All tanks have received other process wastes.

The two 241-AY tanks are located southwest of the 241-AZ tanks on the western fringe of the 241-A Tank Farm. The two 241-AZ tanks are located in the northernmost fringe of the 241-A Tank Farm. Instrument buildings, located between the tanks of the 241-AY and 241-AZ Tank Farms, house process control piping and instrumentation. Various process pits and caissons contain the valves, meters, transmitters, and connectors required for waste transfer and tank control. Local exhausters (two in the 241-AY Tank Farm and one in the 241-AZ Tank Farm) maintain a negative pressure on the AWF tank annular spaces. The systems and supporting structures within the AWF complex are listed in WHC-SD-WM-HIE-007.

The tank design used in the AWF tank farms reflects a departure from the basic design used in all previous tanks. This design features a heat-treated, stress-relieved primary steel liner and a nonstress-relieved outer steel liner, both inside a reinforced concrete shell.

The AWF tanks are the only DSTs in which process pipelines penetrate the sides of the tanks. Special temperature and radiation shielding is required

because the tank farms received and handled PUREX process waste. A unique ventilation system capable of handling moist air is also required. Each 241-AY tank has its own annulus ventilation systems. The 241-AZ tanks share a common annulus ventilation system.

The AWF tanks also differ from other DSTs, such as others in 200 East Area, by the addition of systems that allowed the tanks to receive and store high heat-generating wastes. These additional systems consist of air lift circulators (currently operating in 102-AZ), steam coils (currently inactive), and exhaust condensers. An AWF tank with air lift circulators and steam coils is depicted in Figure B2-24.

To prevent temperature excursions caused by excessive settling of heat-generating fission products, air lift circulators in each tank gently agitate the tank contents by forcing air into the liquid waste except for Tank 241-AY-102 for WRSS (Addendum 1). Each AWF tank is equipped with 22 air lift circulators. Circulator 1 is located at the tank center axis, circulators 2 through 8 are equally spaced around a radius of 4.4 m (14.5 ft), and circulators 9 through 22 are equally spaced around a radius of 8.2 m (27 ft). Air lift circulators 1, 9, 12, 16, and 19 are 5.2 m (17 ft) long and require a solution volume of about 2,460,000 L (650,000 gal) for total submergence. The remaining 17 circulators are 6.7 m (22 ft) long and require a solution volume of 3,220,000 L (850,000 gal) for total submergence. The air lift circulators installed in the AWF tanks are shown in Figure B2-24.

Steam coils have been installed in each of the AWF tanks but are currently not in use and steam has been blanked off. The coils were used initially to heat the tank contents and to either maintain a standby temperature or obtain a desired boil off rate. The coils are constructed of Schedule 40 carbon steel tubing; the diameter of the outer coil is about 1.0 m (40 in.). The overall length of the coil assembly is 17 m (55 ft) in the 241-AY tanks and 16.56 m (54.33 ft) in the 241-AZ tanks. The coil portion of the assembly is approximately 7 m (23 ft) long. A steam coil is shown in Figure B2-24.

The exhaust condenser system, which is part of the 241-AZ-702 Ventilation System, is described in Addendum 3 (Section B2.4.3.7.1.1).

B2.4.4.1.2 241-AW Tank Farm. The 241-AW Tank Farm, located south of the 242-A Evaporator and constructed from 1978 to 1980, comprises six 4.4 million-L (1.16 million-gal) DSTs. The farm, which stores low-heat radioactive liquid waste generated by the PUREX Facility, is an integrated facility that has dedicated ventilation equipment (Section B2.4.3.7.2).

Tank 241-AW-102 is the feed tank for the 242-A Evaporator and is used for all waste concentration operations. Any waste designated for concentration is pumped to feed Tank 241-AW-102 for transfer to the 242-A Evaporator. Tank 241-AW-101 was constructed as an alternative feed tank to the 242-A Evaporator.

In addition to the central pump pit, annulus pump pit, and leak detection pit, which are associated with all 241-AW tanks, Tank 241-AW-102 has a feed pump pit and drain pit. Tank 241-AW-102 also has two air lift circulators for mixing tank contents to provide a uniform feed to the 242-A Evaporator and a

dip tube assembly installed to read specific gravity. Cladding removal waste is initially stored in Tanks 241-AW-103 and 241-AW-105. Solvent extraction wash waste and miscellaneous sump waste are stored in Tank 241-AW-104. The systems and supporting structures for the 241-AW Tank Farm are listed in WHC-SD-WM-HIE-007.

B2.4.4.1.3 241-AN Tank Farm. The 241-AN Tank Farm, located north of the 241-AZ Tank Farm and constructed in 1980-1981, comprises seven 4.4 million-L (1.16 million-gal) DSTs. The tanks are essentially identical except that one tank (241-AN-101) has two additional concrete process pits, and another tank (241-AN-107) has 80 risers because of the 21 air lift circulator assemblies installed in the tank to gently agitate the waste. (The air lift circulators, however, are currently out of service.) The tanks are designed to store double-shell slurry produced at the 242-A Evaporator. (Double-shell slurry exceeds the sodium aluminate saturation boundary in the evaporator without exceeding the receiving tank composition limits.) The systems and supporting structures within the 241-AN Tank Farm are listed in WHC-SD-WM-HIE-007.

B2.4.4.1.4 241-AP Tank Farm. The 241-AP Tank Farm is the most recently constructed (1983 to 1986) and comprises eight DSTs and associated facilities located southeast of the 242-A Evaporator. Each tank can hold 4.4 million L (1.16 million gal). The 241-AP Tank Farm is designed to operate similarly to the 241-AW Tank Farm. Low-heat radioactive liquid wastes are transferred to or from the 241-AP Tank Farm via 241-AW Tank Farm facilities. The systems and supporting structures within the 241-AP Tank Farm are listed in WHC-SD-WM-HIE-007. Tank 241-AP-102 was identified as the Grout Treatment Facility feed tank and contains a mixer pump originally installed to support grout operations.

B2.4.4.2 200 West Area Double-Shell Tanks. Only one DST farm, 241-SY, is located in the 200 West Area. This tank farm was constructed from 1973 to 1976 and consists of three tanks, each of which can hold 4.4 million L (1.16 million gal). These tanks have received various wastes from various operations and facilities in the 200 East and 200 West Areas. Tank 241-SY-101 was used as a double-shell slurry holding tank for the 242-S Evaporator. A mixer pump and monitoring and control systems have been added. Tank 241-SY-102 receives waste generated by 200 West Area SSTs and other 200 West Area facilities (e.g., T Plant and 222-S Laboratory). This tank was the feed tank for the 242-S Evaporator and serves as a cross-site tie for transfers between the 200 East and 200 West Areas. Tank 241-SY-103 was used to store high-strontium concentrated liquor. The systems and supporting structures within the 241-SY Tank Farm are listed in WHC-SD-WM-HIE-007.

B2.4.5 Other Underground Waste Storage Tanks

The following sections discuss the catch tanks, DCRTs, and associated ventilation systems, and inactive miscellaneous underground storage tanks.

B2.4.5.1 Catch Tanks and Double-Contained Receiver Tanks. Catch tanks (discussed in Section B2.4.5.1.2) are buried, underground storage tanks that collect small amounts of waste drained from waste transfer systems and DST

equipment. A DCRT (discussed in Section B2.4.5.1.3), together with its related equipment, is an interim short-term storage facility for liquid waste and a valve pit for waste transfer operations. DCRTs are sometimes referred to as lift stations or catch stations.

B2.4.5.1.1 Ventilation Systems. The three types of ventilation systems in use at TWRS are active systems (i.e., with an exhaust fan), shared (i.e., connected via a line with an operating exhaust system), and passive (i.e., breather filter assembly). The following catch tanks have no HEPA filtration systems: 241-A-302-A, 241-TX-302-C, 241-U-301-B, 241-UX-302-A, and 241-ER-311.

Active Ventilation Systems. No active ventilation systems are associated with catch tanks. Thus, only those active systems associated with the DCRTs are discussed in the following paragraphs and summarized in Table B2-11.

- **244-A DCRT**—The ventilation system for the 244-A DCRT is installed vertically in the filter pit. Associated instrument readout and alarm panels are located in the 242-A Evaporator control room.

  The receiver tank, the pump and filter pits, and the tank vault annulus are vented through a single exhaust system. The filter pit contains tank and annulus air ventilation and filtering equipment. Outside air at 47.2 L/s (100 cfm) enters the DCRT annulus through an air intake equipped with an electric heater, prefilter (roughing filter), and single-stage HEPA filter.

  An exhaust fan provides ventilation air flow through the DCRT vault, receiver tank (or both vault and receiver tank) and filters. The vault and receiver air streams flow through one of two parallel HEPA filter banks in the filter pit, and then join into a single line. After passing through the filters and fan, the air stream is exhausted out a short stack to the atmosphere. Detectors equipped with sample probes and located in the exhaust stack continuously monitor and sample the exhaust air. The stack exhaust fan shuts off automatically if alpha or beta-gamma monitoring capabilities are lost.

  A pressure gauge on the intake exhaust duct measures the annulus air pressure relative to ambient atmospheric pressure. Differential pressure indicators installed in the HEPA filter banks provide pressure-drop data. High differential pressure across the prefilter and the first of two HEPA filters in each bank causes an alarm to sound in the 242-A Evaporator control room. Low differential pressure across the final HEPA filter in each bank automatically shuts down the exhaust fan and sounds a local alarm. A pressure indicator monitors air flow through the stack and stack sampler.

- **244-BX DCRT**—The ventilation system for 244-BX DCRT is similar (but not identical) to the 244-A Ventilation System. The ventilation system in 244-BX is installed horizontally in the filter pit with three banks of HEPA filters. Instrument readout and alarm panels are located in the 241-BY-254 Building.

At 244-BX, the air from the receiver tank and the vault is vented through a single exhaust system. Outside air is drawn through an air heater, a prefilter, and one HEPA filter at a flow rate of 59 L/s (125 cfm) into the annulus. Because no provision is made to provide filtered air to the tank, fresh air normally seeps in through risers and transfer lines.

An exhaust fan provides ventilation air flow through the DCRT vault, receiver tank (or both vault and receiver tank), and filters. The vault and receiver air streams flow through two of the three parallel HEPA filter banks in the filter pit, and then join into a single line. After passing through the filters and fan, the air stream is exhausted out a short stack to the atmosphere. Detectors equipped with sample probes and located in the exhaust stack continuously monitor and sample the exhaust air. The stack exhaust fan shuts off automatically if beta-gamma monitoring capabilities are lost.

A pressure gauge installed on the intake exhaust duct measures the annulus air pressure relative to ambient atmospheric pressure. Differential pressure indicators installed in the HEPA filter banks provide pressure drop data banks. High differential pressure across the prefilter and the first of two HEPA filters in each bank sound an alarm in the 241-BY-254 Building. Low differential pressure across the final HEPA filter in each bank automatically shuts down the exhaust fan and sounds a local alarm. A pressure indicator monitors air flow through the stack and stack sampler.

- **244-CR DCRT**—The ventilation system for 244-CR DCRT is similar to the ventilation system for 244-BX DCRT. Alarm panels are located in the 271-CR control room.

- **244-S DCRT**—The ventilation system for 244-S DCRT is identical to the ventilation system for 244-A DCRT (see the 244-A DCRT discussion). The 244-S DCRT instrument readout is located in the 244-S DCRT Instrument Building.

- **244-TX DCRT**—The ventilation system for 244-TX DCRT is identical to the ventilation system for 244-BX DCRT. Alarm panels are located in the 244-TX Building and 242-T Evaporator control room.

- **244-U DCRT**—The ventilation system in the 244-U DCRT is installed horizontally in the filter pit with three banks of HEPA filters. The instrument readout and alarm panels are located in the 244-U Instrument Building and the 241-U-271 Control Room.

  In this system, the air from the receiver tank and the vault is vented through a single exhaust system. The exhaust fan draws air from both the tank and the annulus on a common header at a flow rate of 59 to 118 L/s (125 to 250 cfm). The flow rate is measured by a self-averaging pitot-type device mounted in the stack. The relative air distribution drawn from the tank and annulus is regulated so that the tank pressure is slightly negative with respect to the annulus.

The DCRT vault, receiver tank, and filter pit exhaust air is drawn through a roughing filter, heater, and two of the three parallel HEPA filter banks in the filter pit. Detectors equipped with sample probes and located in the exhaust stack continuously monitor and sample the exhaust air after it is drawn through the filters. The stack exhaust fan shuts off automatically and isolates the DCRT vault from the filter banks if alpha or beta-gamma monitoring capabilities are lost.

A pressure gauge installed on the intake exhaust duct measures the annulus air pressure relative to ambient atmospheric pressure. Differential pressure indicators installed across the HEPA filter banks provide pressure-drop data. High differential pressure across the prefilter and the first of two HEPA filters in each bank sound an alarm in the 244-U Instrument Building and the 241-U-271 Control Room. Low differential pressure across the final HEPA filter in each bank automatically shuts down the exhaust fan and sounds a local alarm. A pressure indicator monitors air flow through the stack and stack sampler.

Shared Ventilation Systems. One catch tank has a shared ventilation system.

- **241-AX-152 Catch Tank**—The 241-AX-152 catch tank is connected to the 241-AZ-702 ventilation system (Section B2.4.3.7.1) via a ventilation line.

Passive Ventilation Systems. The ventilation systems for the following catch tanks and DCRTs consist of a breather filter similar to the breather filter assemblies on SSTs (described in Section B2.A.3.7, "Ventilation Systems"):

- 241-A-350 DCRT
- 241-A-417 catch tank
- 241-EW-151 DCRT
- 241-S-304 catch tank.

B2.4.5.1.2 Specific Systems and Structures of Catch Tanks. Catch tanks are underground storage tanks used to collect small amounts of waste drained from waste transfer systems and DST equipment. The four basic catch tank designs (Figures B2-25 and B2-26) are (1) direct buried, concrete; (2) direct buried, steel; (3) steel tanks contained in a vault or pit; and (4) concrete vaults with steel liner. The first three designs are shown in Figures B2-25 and B2-26. The catch tanks are ventilated by using a passive ventilation system. The active catch tanks and their dimensions and other attributes are listed in Tables B2-12, B2-13, and B2-14.

Catch tanks can be emptied to a DST via a diversion box through an underground pump-out line. In most instances, a submersible pump is installed in the catch tank to remove liquid; however, in some instances, steam and water jets are also used. When necessary, catch tanks are pumped out by using

aboveground lines and a tank truck. With the exception of 241-U-301-B, all catch tanks are connected to a diversion box via a permanent, underground pump-out line.

200 East Area Catch Tanks. The catch tanks located in the 200 East Area are described in the following paragraphs.

- **241-A-302A Catch Tank**—This 31,940-L (8,438-gal) catch tank is a horizontal cylindrical vessel. A pump pit is located above the tank, which is approximately 5.2 m (17 ft) belowgrade and rests on a sand bed. The catch tank is not actively ventilated. This catch tank is connected to diversion box 241-A-151 and can be pumped out via an encased line to the diversion box.

- **241-A-350 Catch Tank**—The 241-A-350 lift station is located southeast of Tank 241-A-106 in the 241-A Tank Farm. The lift station has a pump pit over a caisson, or vault that contains the catch Tank 241-A-350. The 2,940-L (776-gal) catch tank receives drainage from the 241-A-A and 241-A-B valve pits and, when needed, steam condensate from the 207-A basin. It also provides for routing 207-A basin waste (if out of specification) to Tank 241-AW-102. A waste transfer pump is contained within Tank 241-A-350. The sump within this lift station also contains one pump that pumps sump liquid back to Tank 241-A-350.

- **241-A-417 Catch Tank**—This 167,315-L (44,200-gal) catch tank is a cylindrical concrete vault with an all-welded steel liner that extends to within 127 mm (5 in.) of the vault roof. Above the catch tank are a rectangular pump pit and a rectangular valve pit. The vault/catch tank is approximately 4.3 m (14 ft) belowgrade.

- **241-AX-152 Catch Tank**—This 41,640-L (11,000-gal) catch tank, which is constructed of reinforced concrete and stainless steel-lined walls is approximately 5.2 m (17 ft) belowgrade. Above the catch tank are a rectangular pump pit and a rectangular diverter pit. This catch tank is connected to diverter station 241-AX-152 and equipped with a water jet for moving accumulated waste solutions to an underground storage tank.

- **241-AZ-151 Catch Tank**—This 45,046-L (11,900-gal) catch tank, which consists of a pump pit on top of a catch tank, is buried approximately 5.2 m (17 ft) belowgrade. The 241-AZ-151 catch tank is L-shaped. All inside surfaces of the catch tank are lined with ASTM A 569, 10-gauge steel. This catch tank is connected to diversion box 241-AZ-152.

- **241-AZ-154 Catch Tank** (out of service)—This 3,290-L (869-gal) catch tank consists of a pump pit equipped with a pump and located on top of a steel-lined, reinforced-concrete catch tank. The catch tank is 3.4 m (11 ft) belowgrade and is connected to 241-AZ-101 and 241-AZ-102.

- **241-ER-311 Catch Tank**—This 66,934-L (17,682-gal) catch tank consists of a horizontal, cylindrical carbon steel vessel; a steam jet box resting on the tank, and a pump pit above the tank. The catch tank is 6.1 m (20 ft) belowgrade and rests on a sand bed. The catch tank is connected to diversion boxes 241-ER-151 and 241-ER-152. Catch Tank 241-ER-311 can be pumped out by means of an unencased line buried directly in the soil (direct-buried line) to diversion box 241-ER-151.

200 West Area Catch Tanks. The catch tanks located in the 200 West Area are described in the following paragraphs.

- **241-S-304 Catch Tank**—This 23,850-L (6,300-gal) catch tank, which consists of a pump pit on top of a vertically positioned steel tank, is 7.9 m (26 ft) belowgrade. The catch tank is connected to diversion box 241-S-151.

- **241-TX-302C Catch Tank**—This 66,930-L (17,681-gal) catch tank, which consists of a horizontal, cylindrical vessel, a steam jet box resting on the tank, and a pump pit above the tank, is approximately 8.8 m (29 ft) belowgrade and rests on a sand bed. This catch tank is connected to the 241-TX-154 diversion box. Catch Tank 241-TX-302C can be pumped out via a direct-buried line to the diversion box.

- **241-U-301B Catch Tank**—The 241-U-301B structure consists of a 133,530-L (35,275-gal) catch tank and a pump pit directly above the catch tank, which is approximately 1.8 m (6 ft) belowgrade. The catch tank is an unlined, reinforced concrete tank connected to diversion boxes 241-U-151 and 241-U-152. This catch tank can be pumped out by means of a direct-buried line to the 244-U DCRT, or through an aboveground line and tank truck.

- **241-UX-302-A Catch Tank**—This 66,934-L (17,682-gal) catch tank is connected to diversion box 241-UX-154. A pump pit is located above the tank, which is approximately 6.1 m (20 ft) belowgrade and rests on a sand bed. The catch tank is not actively ventilated. Catch Tank 241-UX-302-A is located near the 241-UX-154 diversion box and can be pumped out via a direct-buried line to the diversion box.

600 Area Catch Tanks. The catch tank located in the 600 Area is described in the following paragraph.

- **241-EW-151 Catch Tank**—A 2,940-L (776-gal) catch tank is provided to collect liquids that might enter the cross-site transfer vent lines. The catch tank and sump-overflow to the cross-site transfer pipeline encasement and then drain to the catch tanks in 241-UX-154 and 241-ER-151. One transfer pump is provided in catch Tank 241-EW-151 so that liquids can be transferred from the catch tank.

B2.4.5.1.3 Specific Systems and Structures of Double-Contained Receiver Tanks. A DCRT, together with its related equipment, is a short-term storage facility for liquid waste and a valve pit for waste transfer operations. A DCRT typically consists of an underground concrete structure that contains a

filter pit, pump pit, and vault in which a catch tank is installed. The active DCRTs are depicted in Figures B2-27 and B2-28 and listed in Table B2-15.

200 East Area Double-Contained Receiver Tanks. The DCRTs located in the 200 East Area are described in the following paragraphs.

- **244-A DCRT**—The 244-A DCRT (Figure B2-27) is located west of the 241-AN Tank Farm. The 244-A DCRT is similar in design to the 244-S DCRT. The DCRT consists of an underground concrete structure that contains a filter pit, a pump pit, and a vault. The vertically mounted carbon steel receiver tank is located in a steel-lined vault and has a total capacity of 61,627 L (16,280 gal).

  The 244-A DCRT is located at a low point in the transfer system. A transfer pump is used to "lift" the transferred liquids. One waste transfer pump is located inside the receiver tank (TK-244-A). This DCRT is an intermediate facility between diversion box 241-ER-153 and valve pits 241-A-A and 241-A-B.

- **244-BX DCRT**—The 244-BX DCRT catch station is located east of Tank 241-BX-102 within the 241-BX Tank Farm. The rectangular 244-BX DCRT catch station is fabricated of reinforced concrete. The DCRT catch station consists of a tank vault, a pump pit, and a filter pit (Figure B2-27). An instrument building is adjacent to the catch station. The top of the vault is closed with cover blocks that are removed to allow access to the pump and filter pits.

  The 117,350-L (31,000-gal) receiver tank (TK-244-BX) is located in the tank vault. A waste transfer pump is located inside the receiver tank, and a pump can be located in the vault sump. This catch station is connected to the 241-B, 241-BX, and 241-BY Tank Farms.

- **244-CR DCRT**—The 244-CR vault is located south of the 241-C Tank Farm. The 56,781-L (15,000-gal), 347-type stainless steel receiver tank (244-CR-003) is used for short-term storage of salt well waste from the 241-C Tank Farm. The 244-CR vault is a two-level, multicell structure constructed belowgrade (Figure B2-27). The lower cell contains the process tanks and the upper cells contain piping and equipment. The vault structure is covered by concrete cover blocks that are removed to permit access to the piping and equipment cells. One waste transfer pump is located inside Tank 244-CR-003. Tanks 244-CR-001 (151,400 L [40,000 gal]), 244-CR-002 (56,781 L [15,000 gal]), and 244-CR-011 (151,400 L [40,000 gal]), which are internal to the vault, are inactive.

200 West Area Double-Contained Receiver Tanks. The DCRTs located in the 200 West Area are described in the following paragraphs and a summary list is provided in Table B2-15.

- **244-S DCRT**—The 244-S DCRT is located south of the 241-SY Tank Farm and east of 13th Street. The tank vault, which contains the 76,768-L (20,280-gal) 244-S receiver tank, mounted vertically, is

lined and separated from the pump pit above by a concrete slab perforated to permit piping and personnel access and supported on steel beams. Surface structures above the 244-S DCRT include an instrument building, an exhaust unit enclosure, an annulus unit enclosure, and an air intake structure.

Waste transfer pumps can be installed within the 244-S DCRT to remove waste from the receiver tank and vault sump. This tank is connected to the cross-site transfer system and to the 241-S, 241-SX, and 241-SY Tank Farms.

- **244-TX DCRT**—The 244-TX DCRT (Figure B2-27) is located north of the single-shell 241-TX Tank Farm. The rectangular 117,350-L (31,000-gal) 244-TX DCRT is fabricated of reinforced concrete and consists of a tank vault, a pump pit, and filter pit. The top of the vault is closed with cover blocks that are removed to allow access to the pump and filter pits. The horizontally mounted 244-TX receiver tank is fabricated of carbon steel and is located in the tank vault.

  Unlike other DCRTs, the 244-TX receiver tank is equipped with high-pressure turbine pumps to sluice and agitate the waste. These pumps keep solids suspended in the tank when plutonium-bearing waste from the Plutonium Finishing Plant is handled. In addition, three neutron monitors located beneath the tank detect plutonium buildup.

  Waste transfer pumps can be installed within the 244-TX DCRT to remove waste from the receiver tank and vault sump. Waste can be transferred from the 244-TX DCRT to the 241-SY Tank Farm via the 244-S DCRT. Waste within the 244-TX DCRT is routed through the 241-TX-152 diversion box to the 241-U-152, 241-U-151, and 241-S-151 diversion boxes. Piping enables direct routing of the waste from the 241-U-151 diversion box to the 244-S DCRT.

- **244-U DCRT**—The 117,350-L (31,000-gal) 244-U DCRT catch station (Figure B2-27) is located southeast of Tank 241-U-110 in the 241-U Tank Farm. The 244-U DCRT was constructed in 1978 and is currently being put into service to receive salt well interstitial liquid from tanks at the 241-U Tank Farm and catch Tank 241-U-301-B. The 244-U DCRT is located in a tank vault.

  Waste transfer pumps are provided in the receiver tank and the vault sump. Contents of 244-U DCRT can be routed to any of the 241-SY tanks through supernatant lines and valve pit 241-SY-B.

B2.4.5.2 Miscellaneous Inactive Storage Facilities. The miscellaneous inactive storage facilities (MISFs) may contain low- or high-level radioactive wastes or nonradioactive materials and may be located belowground or aboveground. The inactive miscellaneous underground storage facilities are typically tanks buried directly in the ground or contained with vaults. These tanks contain both radioactively contaminated (Section B2.4.5.2.1) and nonradioactively contaminated (Section B2.4.5.2.2) waste. The inactive miscellaneous aboveground storage facilities are typically tanks located on the surface or contained within inactive TWRS facilities. These tanks include

both radioactively contaminated and nonradioactively contaminated (Section B2.4.5.2.3) waste.

B2.4.5.2.1 Radioactively Contaminated Inactive Miscellaneous Underground Storage Tanks. A group of 63 small, <189,270 L (<50,000 gal), radioactively contaminated, inactive, and abandoned underground storage tanks are collectively termed the inactive miscellaneous underground storage tanks. These tanks are located throughout the 200 East and 200 West Areas, as shown in Figures B2-29 and B2-30.

Many of these abandoned tanks are buried directly in the ground; others are installed in underground vaults. Many of the tanks contain sludge and process materials. These inactive miscellaneous underground storage tanks were not designed, nor are they used, for high-level waste storage.

The tanks have been administratively divided between TWRS (36 tanks), the U.S. Department of Energy Environmental Restoration Project (24 tanks), the Plutonium Finishing Plant (1 tank), and T Plant (2 tanks) (WHC-SD-WM-PD-046, *Tank Waste Remediation System Inactive Miscellaneous Underground Storage Tanks Program Plan*, and WHC-EP-0861, *Status Report for Inactive Miscellaneous Underground Storage Tanks at Hanford Site 200 Areas*). Most of the tanks assigned to TWRS are considered ancillary components of the tank farm system.

Of the inactive miscellaneous underground storage tanks under TWRS control, 14 are located in the 200 East Area and 22 in the 200 West Area. All 36 tanks are listed in Table B2-16, together with their location and current status.

B2.4.5.2.2 Nonradioactively Contaminated Inactive Miscellaneous Underground Storage Tanks. Waste in the nonradioactively contaminated inactive underground storage tanks is not fully characterized. The nonradioactively contaminated tanks include, for example, chemical addition, fuel storage tanks, and septic tanks. Table B2-17 identifies active nonradioactively contaminated underground storage tanks. These active tanks and the contents are representative of nonradioactively contaminated inactive underground storage tanks.

B2.4.5.2.3 Radioactively and Nonradioactively Contaminated Inactive Miscellaneous Aboveground Storage Tanks. No radioactively contaminated inactive aboveground storage tanks have been identified (WHC-SD-WM-HIE-007). The inactive miscellaneous aboveground storage facilities are similar to tanks found in industry. Waste in the nonradioactively and radioactively contaminated aboveground tanks is not fully characterized. As documented in WHC-SD-WM-HIE-007, the nonradioactive aboveground tanks were used for chemical addition, fuel storage, sodium storage, and air receivers. These tanks are located in or in close proximity to a tank farm or located within inactive TWRS facilities.

B2.4.6 204-AR Waste Unloading Facility

The 204-AR Waste Unloading Facility, located south of the 244-AR Vault and west of the 241-AX Tank Farm, permits rail tank cars or tank trailers carrying liquid radioactive waste to be received into a fully enclosed,

heated, and ventilated building. This versatile facility not only allows tank cars and tank trailers to be pumped out to a designated 200 East Area tank farm, but also allows chemical adjustment and sluicing of tank cars to remove sludge.

Completed in 1981, the 204-AR Waste Unloading Facility (Figure B2-31) is a reinforced concrete structure approximately 20 m (64 ft) long by 12 m (40 ft) wide by 7.77 m (25.5 ft) high. The facility is divided into three major areas:

- Rail tank car unloading canyon (located on the first floor) containing transfer pumps, process piping, remotely operated valves, and a catch tank (located belowgrade)
- Mechanical equipment room (located on the first floor) containing chemical storage and makeup tanks, motor control center, ventilation system, and fire system
- Control room and personnel facilities (located on the second floor).

The air compressor is located in a small prefabricated steel building (Building 209-A) near the northwest corner of the facility. The following sections provide more details on the major areas of the 204-AR Waste Unloading Facility.

B2.4.6.1 First Floor. The first floor of the 204-AR Waste Unloading Facility is approximately 19 m (62 ft) long, 12 m (38 ft) wide, and 7.3 m (24 ft) high (Figure B2-32). The first floor is divided into two process areas: the railcar unloading canyon and the mechanical equipment room.

B2.4.6.1.1 Rail Tank Car Unloading Canyon. The shielded rail tank car unloading canyon is approximately 19 m (62 ft) long, 5.5 m (18 ft) wide, and 7.3 m (24 ft) high. The concrete shielding walls are approximately 0.6 m (2 ft) thick at the base and 0.3 m (1 ft) thick at the top. An additional concrete wall [approximately 5.5 m (18 ft) long by 3.7 m (12 ft) high] at the east end of the canyon shields personnel from the tank car during tank pumping activities. Three drains in the floor of the canyon are routed to the catch tank. Railcars or tank trailers enter the west end of the canyon through a roll-up door and a pair of hinged doors in an arrangement similar to an air lock.

Two radiation probes are located in the tank car unloading area, one on the balcony, and the other on the main floor. These probes, which warn of high radiation fields, are single-channel gamma monitoring units with local readouts as well as audible and visual alarms, both at the instrument and in the 204-AR control room.

Catch Tank. Tank TK-1 is a 5,678-L (1,500-gal), stainless steel catch tank for temporarily storing process solutions flowing through the floor drain system. The tank is located beneath the floor of the unloading area in a stainless steel-lined pit containing a sump. The pit is covered with a removable steel grating. The catch tank is equipped with liquid-level instrumentation, an overflow line that drains to the sump in the pit, inlet

connections for the drain lines and decontamination solution, and a pump-out line. The bottom of the catch tank slopes toward the pump-out line.

The catch tank is vented to the ventilation exhaust plenum through a deentrainer/heater and a single-stage HEPA filter. A hydraulically driven sluicer removes solids from the interior of the catch tank, thereby minimizing the accumulation of radionuclides.

Liquids from the catch tank are periodically pumped to the tank farm on a batch basis by either pump P1-A or P1-B. Any liquid in excess of tank capacity overflows into the pit. The catch tank is equipped with a high-liquid-level alarm that annunciates in the control room. The alarm is wired to close motor-operated valves to prevent process liquid from flowing into the catch tank. The sump in the pit has a leak detector and a pump-out line to the 241-A-A Valve Pit. The sump in the tank also collects liquids from the operating gallery (located in the second-floor balcony) and the mechanical equipment room.

Transfer Pumps P1-A and P1-B. Two identical, self-priming pumps, are located at the east end of the rail tank car unloading canyon. Pump design allows either pump to transfer liquids or boost raw water pressure. The P1-A pump normally pumps radioactive liquids from tank cars, tank trailers, the catch tank, and the sump liquids. The P1-B pump raises the raw water pressure to sluicing tank cars.

Either pump transfers waste from the 204-AR Waste Unloading Facility to a tank farm. A flow recorder/controller on the 204-AR control panel indicates and permits adjustments to the flow rate. An ultrasonic flowmeter measures the flow rate of the waste, and a diaphragm-operated valve in the transfer line controls the waste flow.

B2.4.6.1.2 Mechanical Equipment Room. The mechanical equipment room, located on the north side of the unloading canyon, is approximately 18 m (58 ft) long, 6.1 m (20 ft) wide, and 3 m (10 ft) high and has two floor drains connected to the catch tank. The chemical makeup system; motor control center; heating, ventilation, and air conditioning (HVAC) equipment; and fire protection equipment are located in this room.

Chemical Makeup System. When the composition of waste in the tank car or the catch tank does not meet tank farm acceptance specifications, chemical adjustment solutions are prepared in the chemical makeup system. The required volume of adjustment solution is metered into the tank car pump-out line during transfer.

An inline mixer system enables the receipt of liquid waste with a solution pH as low as 7. Inline chemical adjustment is the only method used for adjusting the contents of tank trailers. The inline mixer system provides a means for pumping out the low pH waste and mixing it with a required nitrite or caustic solution in the pump-out line to reduce the problem of precipitating solids. Two positive displacement metering pumps, P5-A and P5-B (in parallel), feed the necessary nitrite or caustic additive to the static mixing device. A pH probe system incorporated downstream from the mixer ensures that the liquid waste meets tank farm acceptance specifications.

The four storage/makeup tanks are used for various solutions:

- **Tank 2, Nitrite Solution (TK-2)**—This 1,893-L (500-gal) carbon steel tank is used to make up sodium nitrite solutions. TK-2 equipment includes drain and overflow lines to the catch tank, a steam heating coil, a weight factor liquid-level sensing system, a raw water supply line, a chemical addition port, and an agitator. Chemicals can be pumped into the tank car or catch tank by using pump P-3. Pumps P5-A and P5-B can pump chemicals from TK-2 into the 102-mm (4-in.) pump-out line.

- **Tank 3, Dilute Caustic Solution (TK-3)**—This 1,893-L (500-gal) stainless steel tank is used to make up dilute caustic solutions. TK-3 equipment includes drain and overflow lines to the catch tank, a steam heating coil, a weight factor liquid-level sensing system, a raw water supply line, a chemical addition port, and an agitator. Chemicals can be received from TK-5 by using pump P-4 and routed to the tank car or catch tank by using pump P-3. Pumps P5-A and P5-B can pump chemicals from TK-3 into the 102-mm (4-in.) pump-out line.

- **Tank 4, High pH Buffer Solution (TK-4)**—This 757-L (200-gal) stainless steel tank is used to make up a high pH buffer solution for pH probe calibration. TK-4 equipment includes drain and overflow lines to the catch tank, a weight factor liquid-level sensing system, a raw water supply line, a chemical addition port, and an agitator. Buffer solution is routed to the pH probe cavity by using either pump P5-A or pump P5-B.

- **Tank 5, 50% Caustic Solution (TK-5)**—This 6,814-L (1,800-gal) carbon steel tank receives 50% sodium hydroxide solution delivered by tank truck. The fill pipe for TK-5 penetrates the 204-AR Waste Unloading Facility wall and terminates outside the building next to a platform provided for the tank truck. A pump mounted on the tank truck transfers the caustic solution to TK-5. From TK-5, chemicals can be transferred either (1) to TK-2 by using pump P-4 or (2) directly to the catch tank or tank car by using pump P-3. Pumps can also be used to transfer liquid from TK-5 to the 102-mm (4-in.) pump-out line. TK-5 equipment includes drain and overflow lines to the catch tank, a steam heating coil, and a weight factor liquid-level sensing system.

Chemicals are added to TK-2, TK-3, and TK-4 in the mechanical equipment room.

Motor Control Center. The motor control center is located at the west end of the mechanical equipment room. Agitator controls for the chemical makeup system, pump controls, and power controls are mounted on the control panels.

Heating, Ventilation, and Air Conditioning Equipment. The HVAC equipment located in the mechanical equipment room includes the main exhaust duct work, exhaust fan, and final stage of HEPA filters. The duct work also houses the demisters, heaters, and exhaust dampers.

Fire Protection. Heat and smoke detectors, as well as a sprinkler system, are installed throughout the 204-AR Waste Unloading Facility. A fire alarm master control box, control panel, trouble control transmitter, and supervisory annunciator panel are located at the building exit that is at the southeast end of the facility. One inlet line supplies raw water for use in the mechanical equipment room and other similar demands. Another inlet line supplies raw water for use in the fire protection system for the facility, in the sluicing system for the tank car unloading canyon, and in pump shaft seals for the P-1A and P-1B pumps. A backflow preventer in each raw water supply line prevents accidental contamination of the raw water system.

B2.4.6.2 Second Floor. The second floor contains the control room and administrative areas. The administrative areas include a soiled clothes room and its airlock, toilets, and a locker room (Figure B2-32).

The control room, located on the east end of the second floor, is shielded from the rail tank car unloading canyon by approximately 0.3-m-(1-ft-) thick concrete shield walls that contain a lead glass window for viewing tank unloading operations. The control room contains a main control panel and an auxiliary panel. The main control panel contains instrumentation to monitor pump pressures, drain valve operations, leak detection, and radiation levels (204-AR stack, soiled clothes room, and rail car unloading canyon).

The auxiliary panel contains audible and visible alarms for the following process and monitoring variables:

- Radiation monitors—High radiation or monitor failure
- Catch tank level—High and low
- Leak detection—Catch tank sump level, transfer line
- Flow rates—Low flow to tank farms
- Door position—Outer and inner doors to canyon
- HEPA filter differential pressures.

B2.4.6.3 Ventilation Systems. Three ventilation systems within the 204-AR Waste Unloading Facility service the personnel area, the radiation zone, and the mechanical equipment room. The personnel area ventilation system operates at positive pressure. This system provides air to the control room, locker room, toilet, and soiled clothes room. Most of the air supplied to the control room is recirculated. The air not recirculated is exhausted through the soiled clothes room or the toilet exhaust systems.

The radiation zone exhaust system operates at a negative air pressure and draws air from the canyon area, soiled clothes room, and catch tank. The fan is located in the mechanical equipment room and discharges air through the roof ventilator. The canyon area exhaust air is filtered through parallel roughing and HEPA filter banks (Table B2-18), through a second or final HEPA filter bank located in the mechanical equipment room, and then through the main duct work before being exhausted to the environment through a stack.

The catch tank exhaust system consists of a moisture separator, heater, and HEPA filter and associated duct work. The catch tank duct work is connected to the main duct work just upstream of the final HEPA filter bank. The soiled clothes exhaust system duct work is also connected to the main exhaust duct work just upstream of the final HEPA filter bank. A water spray fire protection system suppresses fires upstream of the HEPA filters.

The mechanical equipment room is not connected to the radiation zone exhaust system. The mechanical equipment room exhaust system consists of a roof-mounted exhaust fan operated on a demand basis and only when the radiation zone exhaust system is operable.

B2.4.6.4 Radiation Monitoring Systems. The 204-AR Waste Unloading Facility is equipped with radiation monitoring systems for the radiological protection of personnel and the environment in accordance with WHC-SD-SQA-TA-20011, *Technical Assessment of the Workplace Air Sampling Requirements at the Tank Farm Facilities*. These systems may include record air samplers and CAMs.

Record air samplers collect particulate matter on filter paper at four 204-AR Waste Unloading Facility locations: the tank car unloading room balcony, soiled clothing room, control room, and exhaust stack.

CAMs monitor and record beta-gamma activity in the airflow through the tank car/tank trailer unloading area, soiled clothes room, mechanical equipment room, control room, and exhaust stack. Audible and visual alarms annunciate at the CAMs and in the 204-AR Control Room. A multipen recorder on the auxiliary panel in the 204-AR Control Room records CAM levels for the exhaust stack, unloading area, and soiled clothes room.

The exhaust stack monitoring system consists of a fixed record air sampler in addition to a CAM. The CAM measures particulate emissions from the stack through isokinetic probes mounted in the stack.

B2.4.7 244-AR Vault

The 244-AR Vault, located north and west of 241-A Tank Farm in the 200 East Area, was constructed in 1966. The vault was designed to remove, treat, and transfer PUREX Facility tank farm sludges to 221-B Plant for fission product removal; provide interim storage for PUREX Facility acid waste feed to 221-B Plant; and receive and distribute the neutralized high-level waste of 221-B Plant. The 244-AR Vault is being cleaned and readied for decontamination and decommissioning. Therefore, this facility description addresses only the following major structures and components:

- Canyon building and process cells
- Ventilation systems
- Control rooms.

B2.4.7.1 Canyon Building and Process Cells. The canyon building is a reinforced concrete structure with 0.5-m- (1.5-ft-) thick walls. The canyon building measures 29 m (94 ft) by 5.5 m (18 ft) internally and is 11 m (36 ft) high above the process cell concrete cover blocks on the canyon floor. The cover blocks, which separate the process cells from the canyon, are 1.5 m (5 ft) thick and have recessed lifting bails. The process cells house the process vessels and associated equipment. The canyon building also contains two shielded personnel access doors and a large, shielded motor-driven equipment access door that slides on a monorail. A metal wind-reduction facility is attached to the east end of the building for weather protection when the equipment-access doors are open.

Three process cells and a failed equipment storage cell are located below the canyon (Figures B2-33 and B2-34). Each of the three process cells contains sumps with an intercell sump overflow. Cells 1 and 2 have identical inside dimensions, 6.4 m (21 ft) square by 9.98 m (32.75 ft) deep. Cell 3 is 9.8 m (32 ft) long by 3.7 m (12 ft) wide by 6.4 m (21 ft) deep. The concrete cell walls are 0.6 m (2 ft) thick.

Cell 1 (Figure B2-34) is located between cell 2 and the failed equipment storage area at the east end of the vault. Each of the concrete cell walls is 0.6 m (2 ft) thick. Cell 1 contains Tank TK-244-AR-001, a sump jet, wall nozzles, permanent piping, instrumentation, and a cell spray system.

Tank TK-244-AR-001, the primary storage tank for neutralized current acid waste (high-level first-cycle solvent extraction waste from the PUREX Facility), is located in cell 1 of the 244-AR Vault and is constructed of 9.53-mm- (0.375-in.-) thick, Type 304L stainless steel plate. The flat-bottomed, 163,333-L (43,148-gal) tank is 6.1 m (20 ft) in diameter and 6.02 m (19.75 ft) high. The tank is equipped with upper and lower cooling coils, a transfer pump, a transfer jet, an agitator, spray rings, a purge air system, a sampler, vessel vent and chemical addition lines, instrumentation, and three spare tank nozzles.

Cell 2 (Figure B2-34) is located between cells 1 and 3 of the canyon building. Cell 2 contains Tank TK-244-AR-002, a sump jet, wall nozzles, permanent piping, instrumentation, a cell spray system, and radiation monitoring equipment.

Tank TK-244-AR-002 is constructed of 9.53-mm- (0.375-in.-) thick, Type 304L stainless steel plate. The flat-bottomed, 164,431-L (43,438-gal) tank is 6.1 m (20 ft) in diameter and 6.02 m (19.75 ft) high. The tank is equipped with upper and lower dual service (heating and cooling) coils, a transfer pump, a sluice pump, a transfer jet, an agitator, spray rings, a purge air system, a sampler, vessel vent and chemical addition lines, a radiation monitoring dry well, instrumentation, three spare tank nozzles, and a spare permanent piping line.

Cell 3 (Figure B2-34) is located on the west end of the canyon building and contains Tanks TK-244-AR-003 and TK-244-AR-004, a sump jet, wall nozzles, permanent piping, instrumentation, a cell spray system, and radiation monitoring equipment.

Tanks TK-244-AR-003 and TK-244-AR-004 are constructed of 13-mm- (0.5-in.-) thick, Type 18-8Cb, stainless steel plate. The slope-bottomed, 18,143-L (4,793-gal) tanks are 2.9 m (9.5 ft) in diameter and 2.7 m (9 ft) high. Each tank is equipped with a cooling coil, two transfer jets, a transfer pump, an agitator, a spray ring, a purge air system, a sampler, vessel ventilation and chemical addition lines, instrumentation, and three spare tank nozzles.

The failed equipment storage area is located next to cell 1 in the east end of the canyon building. This storage area contains three storage tubes, each constructed of 1.4-m- (4.5-ft-) dia, 12-gauge, corrugated, galvanized pipe, that extend 11 m (35 ft) below the failed equipment storage area cover blocks. Each of the storage tubes discharges to the cell 1 floor. The storage tubes are vented to cell 1 through 152-mm- (6-in.-) dia vent pipes located 6.7 m (22 ft) above the storage tube bottom. The storage tubes are covered with a 0.6-m- (2-ft-) thick reinforced concrete block.

B2.4.7.2 Ventilation Systems. Four ventilation systems service the 244-AR Vault Facility:

- Control room ventilation system, K-1
- Canyon intake ventilation system, K-2
- Canyon exhaust ventilation system, K-3
- Vessel ventilation system, K-4.

These systems are not currently operable and significant modifications or upgrades would be required to return these systems to service. The facility process area is passively ventilated to the building. A summary description of the 244-AR Vault ventilation systems, as designed, is provided in Table B2-19.

B2.4.7.3 Control Rooms. The control room contains controls or instrumentation required to operate the 244-AR Vault. The room is 10 m (34 ft) long, 6.86 m (22.5 ft) wide, and is divided into several localized equipment areas. These areas are the jet gang valve stations, steam control station, HVAC instrument panel, transmitter and converter racks, process instrument panels, hydrogen purge air control station, switch gear and motor control centers, and crane control room. (Steam lines to the steam control station are blanked; therefore, the station is out of service.)

B2.4.8 Cribs, Ditches, and Ponds

Those cribs currently owned or operated by TWRS are shown in Table B2-20. All cribs, ditches, and ponds used or operated by TWRS are identified graphically in Figure B2-35 and discussed in the following sections. These facilities are now inactive.

B2.4.8.1 Cribs. A crib is defined as a subsurface liquid distribution system. The primary function of a crib at TWRS was to dispose of liquid

effluents so that low-level radionuclides (if any) were absorbed and held in the soil beneath the crib.

Crib designs vary widely but the function of all designs is the same. A typical crib design is shown in Figure B2-36. Most cribs consist of gravel-filled trenches, 3.0 to 4.6 m (10 to 15 ft) deep, approximately 3 m (10 ft) wide at the bottom, with the sides sloping out toward the top. The bottom third to half of the crib is filled with coarse gravel to provide a large volume of pore space between the individual rocks.

For many cribs vapor barrier (typically plastic) on top of the gravel is covered by original soil material. Liquid-level risers are constructed into the gravel to allow measurement of effluent levels in the crib. Level readings are taken by using an insulated calibrated wire (zip cord) and a direct current meter, a sonic ullage gauge, or a liquid-level gauge.

B2.4.8.2 Ditches and Ponds. Wastewater generated from operating facilities within the exclusion areas of the 200 East and 200 West Areas can be discharged to B Pond, which consists of the following lobes: 216-B-3, 216-B-3A, and 216-B-3B, which are currently inactive, and 216-B-3C, which is currently active. A contingency pond (216-E-28) is located northwest of B Pond and east of 200 East Area and consists of three lobes. Each 216-E-28 lobe is equipped with liquid-level stakes, a flow control structure, and a flowmeter. Ditches (which are gravel-lined) and pipelines (used for transporting water to the ponds) may be equipped with valves for regulating or adjusting the flow.

B2.4.9 Storage and Handling Areas for Contaminated Equipment and Materials

Facilities or areas that have stored contaminated equipment and materials include the 209-E Complex, less than 90-day waste storage pads, vertical storage units, a low-level waste pad, the 213-W Building, and the 2727-W Sodium Storage Facility. The 209-E Complex is a staging area for contaminated equipment, mixed waste, and both regulated and nonregulated wastes awaiting final disposition.

The vertical storage units and the low-level waste pad supplement the temporary storage areas provided to support a short-term operation and are controlled by the radiation protection and hazardous materials programs (Chapter 4.0).

The vertical storage units (Section B2.4.9.2) are typically associated with a specific tank farm. The 213-W Building and the 2727-W Sodium Storage Facility (Sections B2.4.9.3 and B2.4.9.4) are used for material storage and handling activities.

B2.4.9.1 209-E Complex. The 209-E Complex, which is compliant with the *Resource Conservation and Recovery Act of 1976*, is located north of the PUREX Facility. The complex consists of an administrative building, the less than 90-day waste storage pad, and the low-level waste storage pad. The administrative building houses support personnel who operate the less than 90-day waste storage pad for mixed, low-level, and hazardous waste.

The less than 90-day waste storage pad consists of a hazardous-waste pad, a mixed-waste pad, and a low-level waste pad. The waste stored on these pads is generated by day-to-day maintenance and operations in the 200 East Area tank farms. The waste materials include solvents, oils, paints, and cleaning materials from the radiation zones. Other waste contributions are equipment or material contaminated through contact with the mixed waste stored in tank farms. The low-level waste pad stores low-level, radiologically contaminated solid waste. This pad is located northwest of the less than 90-day waste storage pad.

B2.4.9.2 Vertical Storage Units. The vertical storage units (most of which are located in the 200 West Area SST farms) were used in the past to store dry, radiologically contaminated equipment or soil. These facilities are now inactive. The vertical storage units are constructed of steel pipes, range from 0.3 to 0.6 m (1 to 2 ft) in diameter, and are approximately 1.8 to 2.1 m (6 to 7 ft) deep; however, some of the vertical storage units may be up to 7.3 m (24 ft) deep. Although most of the units are capped, no documentation is available to verify whether each has a bottom. The number and dimensions of each vertical storage unit, identified by SST farm, are presented in Table B2-21.

B2.4.9.3 213-W Building. The 213-W Building was used to compact low-level wastes and is referred to as the Dry Waste Compactor Facility. Compaction activities have ceased and will not be resumed. Activities such as contaminated instrument repair or waste repackaging take advantage of the controlled environment in the 213-W Building, which is unoccupied except during such activities.

The 213-W Building is a preengineered, self-framing metal structure located near the west boundary of the 200 West Area. The 213-W Building has three rooms with a combined floor space of approximately 79 m^2 (850 ft^2). The rooms, arranged in series, include a personnel entry room separated by an airlock from a work room and a package inspection room with a roll-up garage door. The work room is maintained at a slight vacuum and ventilated through two HEPA filters to an external, dedicated 8.8-m (29-ft) monitored exhaust stack. All rooms are protected by a dry pipe fire suppression system and have personnel doors that open to the outside. Floor drains are connected to an inactive, underground retention tank with a pit access. The 213-W Building is adjacent to 272-WA Building, which contains offices, change rooms, support shops, a garage, and a lunchroom.

B2.4.9.4 2727-W Sodium Storage Facility. The 2727-W Sodium Storage Facility houses five horizontally mounted sodium storage tanks in a preengineered, self-framing metal structure located in the south-central part of the 200 West Area approximately 11 m (35 ft) west of a north-south rail spur. The insulated tanks are approximately 4.3 m (14 ft) O.D. and 7.16 m (23.5 ft) long.

The headspace of each sodium storage tank contains pressurized nitrogen gas 14 kPa to 69 kPa (2 to 10 psig) to preclude oxidation of the sodium. A nitrogen gas pressure monitoring system is connected to each tank through an externally mounted, weatherproof control panel. The control panel includes an audible horn, indicating lights, and a strobe light. The 8.5- by 26-m (28- by 84-ft) building encloses one large room with a floor space of approximately 214 m^2 (2,300 ft^2). Features of the building include the following.

- Four gravity-type roof ventilators are located on the ridge line of the roof approximately 6.7 m (22 ft) abovegrade. Personnel doors on each end of the building are louvered for ventilation.
- The metal building is grounded by interconnected, 2.4-m (8-ft) grounding rods in six locations to form a grounding grid. Each internal sodium tank is grounded to the building grounding grid. The external sodium tank pressure control panel and the externally mounted master fire alarm cabinet are independently connected to the building grounding grid.
- No water or steam service is provided and external signs clearly indicate water should not be used to fight fires. No weeds or other combustibles are allowed near the building.

External resistance heaters wrapped around the tanks to melt the sodium are disconnected (i.e., the sodium is solid). An insulating layer of refractory brick held in place by a wire mesh covered with an aluminum sheath surrounds the heaters and tanks.

B2.4.10 Waste Transfer Systems

Liquid wastes are transferred to and from tank farm storage, chemical processing facilities, and related operational units (e.g., tanks within receiver vaults and evaporators) through a network of buried transfer pipelines, operating equipment, and control or transfer structures (diversion boxes, valve pits, DCRTs, and diverter stations). Liquid wastes are also received from operational facilities (e.g., Plutonium Finishing Plant).

The purpose of transfers is to move liquid waste from one location to another over a planned, established route in response to (1) a loss of tank integrity, (2) processing requirements, and (3) changing storage needs. Liquid waste generated in the 200 East and 200 West Areas is transferred through the network of pipelines both to and from the underground storage tanks, vaults, and the 242-A Evaporator. Types of transfers are as follows:

- From tank farms to 242-A Evaporator
- Cross site
- Between process facilities and tank farms
- Farm to farm

- Within a farm
- Catch tank to storage tank
- Condensate collection tank to storage tank.

Transfers are made over both dedicated and nondedicated routes. Dedicated routes do not require valving or jumper changes. Therefore, repetitive transfers are often made through a dedicated route so that jumper placement and valve alignment do not need to be changed. For example, dedicated routes are usually used for transfers into the 241-AW Tank Farm from the PUREX Facility. Nondedicated waste transfer routes require repositioning of jumpers or realignment of valves. In addition to the underground piping network, the routing equipment at tank farms consists of pumps, valves, rigid piping, and rigid and flexible jumpers. Leak detection instrumentation is located in diversion boxes and process pits.

The components of the active Sitewide waste transfer and routing systems related to SST and DST farms are described in this section. The inactive and abandoned (including identified and unidentified) systems will be evaluated at the time of discovery or during decontamination and decommissioning activities.

B2.4.10.1 Transfer Pipelines and Jumpers. Transfer pipelines distribute waste from a generating facility to an individual tank farm or from one tank to another within a tank farm. Waste is transferred from an SST or DST to a receiving tank or facility through existing underground piping or temporary over-the-ground piping. Transfer pipelines are identified and categorized on the basis of the material transferred. The categories are as follows.

- **Process Lines**—Pipelines that return waste from the leak-detection pit or annulus pump pit to a central pump pit. (Process piping is also a general term used for pipelines between processing facilities and a tank farm.)
- **Supernatant Lines**—Pipelines that transfer liquid waste between tanks or processing facilities.
- **Slurry Lines**—Pipelines that transfer liquid-solid slurries between tanks or processing facilities.
- **Sluice Lines**—To support WRSS (Addendum 1).

All active transfer lines in the 200 East and 200 West Areas are identified in Table B2-22. The known inactive transfer lines are identified in Table B2-23.

B2.4.10.1.1 Waste Transfer Lines. The primary pipe used in waste transfer lines is carbon or stainless steel, as detailed in

WHC-SD-TWR-RPT-002. Waste transfer lines used at the Hanford Site are of three general types:

- Encased piping
- Direct buried piping
- Over-the-ground piping.

The term "encased piping" indicates that the primary transfer line is completely enclosed within a secondary confinement barrier. The secondary confinement barrier is usually a larger pipe (newer designs), concrete jacket (older designs), or a pipe trench. The term "direct buried piping" indicates that the piping is not encased and is buried directly in the soil. The term "over-the-ground piping" refers to piping that is not buried.

Most of the underground piping systems are provided with cathodic protection and heat tracing capabilities. The heat tracing system was intended to prevent liquid waste gelling, crystallization, or precipitation in process lines. However, the transfer systems are operated without the heat tracing system. New supernatant lines are constructed without a heat tracing system. All salt well transfer lines, including the jumpers leading to the receiver tank, are heat traced to prevent a temperature drop in the salt well liquor.

When buried, the steel of the piping encased in larger pipe is subject to external galvanic corrosion resulting from bacterial and chemical activity in the soil. Therefore, a cathodic protection system is provided to minimize waste transfer line failures. Most waste transfer lines associated with the DSTs in the 200 East Area are currently protected by an active cathodic protection system.

Encased Piping. To provide secondary confinement, primary encased piping pipes are encased either in concrete or in a larger, extra pipe (Figure B2-37). Encasements collect liquid leaks from a failed process line and deliver the liquid to a detection point.

The concrete encasement used as secondary confinement consists of a reinforced concrete trough and cover block. The width of the trough depends on the number of primary pipes the trough contains. The cover blocks are either precast and placed on top of the trough or the trough is covered with a steel plate and the concrete is poured in place. The concrete joints are sealed with asphalt and tar.

Features associated with the concrete-encased lines include an earth cover and a series of either test or swab risers or leak detectors. At various locations along the encasement, 51-mm (2-in.) test risers have been provided as shown in Figure B2-37. The test risers consist of 51-mm (2-in.) pipes extending from within the encasement to 1 m (3 ft) above ground level. These test risers are monitored routinely for contamination and moisture. Any leaks inside the primary line collect in the concrete void. A location of a leak can be determined with an absorbent leak detection pad inserted into a test riser.

In the pipe-in-pipe design, a second, larger pipe surrounds the primary pipe or waste transfer line. This pipe-in-pipe design provides better leak confinement than concrete, and the encasement can be pressure tested to ensure its integrity. To prevent settling in the primary pipe resulting from elevation changes, each encasement is equipped with an encasement hydrotest riser and a leak detection riser. The pipe-in-pipe encasement drains to a leak detector that alarms if a leak into the encasement occurs. Air purge leak detectors are used in some encased transfer lines. These systems bleed air through the encasement and detect a leak when the pressure in the encasement increases.

A section of pipe-in-pipe encasement is shown in Figure B2-37. Inside an encasement, one method of supporting the primary pipe is to rest the pipe on a flat bar. This bar is welded to the encasement and primary pipe. In a second method of supporting the primary pipe, two bars are welded axially to the primary pipe only. This design allows the primary pipe to expand relative to its encasement. The primary axial supports of the pipe are spaced to eliminate sagging of the primary pipeline.

Associated with each type of encased piping designs are other engineered features to ensure primary line integrity and prevent line blockage. The other engineered features include risers at encased piping end points and cleanout boxes. Risers, which include encasement hydrotest risers, leak detection risers, and test risers, are associated with both types of encased lines. Cleanout boxes are associated with only the pipe-in-pipe encasements. In the following paragraphs, the types of risers are discussed and a cleanout box is described.

- **Encasement Hydrotest Risers**—The capped, 13-mm- (0.5-in.-) dia encasement hydrotest risers, which are located at the high ends of encasements, allow air to escape from an encasement that is being filled with water for pressure testing. After the pressure check, test water is allowed to flow into a process pit drain.

- **Leak Detection Risers**—The leak detection risers are located at the low end of encased lines entering the tank farms and are designed to contain conductivity probe leak detectors. These risers are 38 to 51 mm (1.5 to 2.0 in.) in diameter and are divided into a capped riser and a probe riser.

  The capped riser is used to add water during both pressure testing and testing of the leak detection alarm system. The probe riser contains an electrode connected to a leak detection station and alarm system. Leakage into an encasement pipe flows to the leak detection riser to be contained at the seal loop inside the pit. Opening the seal loop valve allows liquid to flow to the pit floor drain.

  The leak detection risers are not used on short, in-farm lines (between pits) where leakage into encasement drains is detected by leak detectors mounted on pit floors. These risers, however, are used on lines entering the tank farms from outside pits.

- **Test Risers**—The test risers are located on the low end of encased lines not equipped with leak detection risers. The test risers also are located intermittently along the length of especially long lines (e.g., SL-160 and SN-260). The test risers are fabricated from capped, 51-mm- (2-in.-) dia Schedule 40 pipe and are used as filling points for hydrotesting and as entry points for contamination swab testing.

- **Cleanout Boxes**—Slurry transfer lines are subject to plugging from settling solids. The cleanout boxes, shown in Figures B2-38 and B2-39, were installed so that transfer lines could be cleaned if plugs develop. The boxes are positioned approximately every 30.5 m (100 ft) along the slurry transfer lines between evaporator facilities, valve pits, and storage tanks.

Direct-Buried Piping. Direct-buried transfer lines are made of carbon steel, typically 25- to 76-mm- (1- to 3-in.-) dia welded pipe and buried 1 m (3 ft) underground. Direct-buried lines are pressure tested annually. In the past, direct-buried lines were used to transfer process solutions. The use of direct-buried lines in normal transfer service is being discontinued except for occasional use as drain lines or for temporary pumping operations. These lines are heat traced and insulated to keep dissolved substances from precipitating out and plugging the lines.

Over-the-Ground Piping. Some of the tanks that require waste transfer do not have any piping or the tank transfer systems have failed (leaked). A temporary over-the-ground transfer system has been developed to transfer waste for these tanks. The temporary over-the-ground transfer system uses jet or submersible pumps and over-the-ground piping with either earth or earth and concrete block pipe protection systems.

The over-the-ground system consists of a primary pipe inside a secondary confinement pipe and a pipe protection system (concrete barrier). The primary pipe is a 25-mm- (1-in.-) dia, stainless steel-wrapped flexible hose lined with ethylene-propylene-diene monomer (EPDM). The secondary confinement is a 51-mm- (2-in.-) dia, welded, stainless steel pipe. The stainless steel braided tube wrapped around the primary pipe provides abrasion resistance during assembly of the system, and provides reinforcement to minimize the chance of bursting the EDPM hose. The over-the-ground systems are carefully sloped to prevent low spots and to facilitate flushing.

Confinement piping slopes to drain by gravity to each tank pit from approximately the center point of the piping run. Sandbags or other weights are applied to the legs of pipe supports. Berms cover all the exposed pipe between tank pit connections. The temporary piping is connected to a waste transfer pump or to existing tank transfer piping.

B2.4.10.1.2 Jumper Assemblies. Jumpers are rigid or flexible sections of pipeline used to connect separate nozzles located inside diversion boxes and various types of pits. Nozzles are the termination of waste transfer lines going into diversion boxes and pits. Jumper installation or removal requires removal and replacement of the cover block.

Two types of jumpers (Figure B2-40) are used at the Hanford Site.

- **Rigid jumpers**—stainless steel pipe is fitted to specific wall nozzle configurations.
- **Flexible jumpers**—braided, stainless steel, flexible hose permits multiple connections.

The type of head used depends on the nozzle design. The following two types are used at TWRS, one larger than the other.

- The larger connector (Hanford Site head) has a flat-nozzle flange gasket.
- The smaller connector (PUREX head) has a radius-faced beveled flange gasket.

Both types of jumper head connectors are shown in Figure B2-41 together with a crane-supported impact wrench used to tighten the connectors to the nozzles. New construction uses the PUREX head design.

Valves can be installed in rigid jumpers so that waste routes can be changed by opening and closing the valves. The valve handles are located above the top of the valve pit cover blocks, and the valve stems extend downward through penetrations in the cover blocks. A flow diagram painted on the cover blocks and valve handles assists the operator in valving to the correct pipeline and avoiding misrouting of the waste.

Valve pit jumpers and diversion box jumpers are often confused. The difference between the two is that a diversion box jumper generally connects only two nozzles but a valve pit jumper can connect to several wall nozzles (each leading to a different waste transfer line). The valve pit jumper uses built-in two- and three-way valves to divert the flow where needed.

Diverting liquid flow from one tank to another through valve pits usually does not require major changes to the jumper or alignment. Multivalve, multiconnector jumpers are used to reduce radiation exposure and field time (because of the less frequent jumper changes).

B2.4.10.2 Miscellaneous Transfer Equipment. In addition to the equipment identified in the transfer line systems description, other structures or facilities in the transfer line are used to control or direct waste transfers.

B2.4.10.2.1 Valve Pits. Valve pits (Figure B2-42) are located belowground and are reinforced concrete structures that contain valves and jumper assemblies to route the liquid waste through the connected pipelines within a tank farm. Valve pits have 0.3-m- (1-ft-) thick walls and heavy, 0.51-m- (20-in.-) thick grade-level cover blocks. When several tanks are undergoing simultaneous pumping to a single receiver tank, the flow is routed to a valve pit. In the valve pit, the transfer lines of the sending tank are manifolded to the receiver tank line by means of a series of valves and jumper connections. Two- and three-way valves are built into each rigid jumper assembly to divert the flow in the required direction. Each valve pit is equipped with leak detection that is interlocked to shut down pumps. Each

valve pit also has either a flush line connected to a flush pit or a drain line connected to an underground storage tank.

B2.4.10.2.2 Diversion Boxes. Diversion boxes (Figure B2-43) are belowgrade, reinforced concrete structures that provide a flexible method of directing liquid waste from a given point to any other given point. The top of the diversion box is a concrete cover block that usually extends abovegrade. The cover blocks vary in thickness from box to box. Some diversion boxes are lined with steel on the bottom and a portion or all the way up the sides.

Diversion boxes are normally connected to a specific tank farm and are used to establish waste transfer routes between tank farms. The waste transfer route between selected facilities can be established by selecting a combination of lines that are connected by diversion boxes, diverter stations, pump and valve pits, and associated valving and equipment.

Diversion boxes also provide confinement for leaks in waste transfer lines (which drain back to the boxes through the encasement) and leaks at jumper nozzle connections. Waste transfer lines are connected inside the diversion box by installing a jumper between the connecting nozzles. Jumpers may be either rigid or flexible, but rigid jumpers are required when valves are used.

The basic diversion box was designed to operate without valves. However, some transfer operations are better served by using valves (e.g., when wastes are transferred from multiple facilities to a common storage tank). In this type of transfer, rigid jumpers and valves are required.

After a waste transfer is completed, the transfer lines are drained back to tanks in the low points of the line, including the point of origin. The jumper configuration through a diversion box enhances the drain-back capability of a particular transfer route.

All diversion boxes drain to a catch tank or nearby underground storage tank, and all boxes contain a leak detector probe that alarms if a leak occurs that causes waste to accumulate in the diversion box. The 241-ER-151 Diversion Box Pipe Pit supports incoming and discharge transfer lines to and from the Diversion Box 241-ER-151. The Pipe Pit is sealed and below grade and is essentially an extension of pipe encasements connecting into the Pipe Pit. The Pipe Pit drains into Catch Tank 241-ER-311. A typical diversion box is shown in Figure B2-43. The operating connections for a typical diversion box are illustrated in Figure B2-44.

B2.4.10.2.3 Diverter Stations. Diverter stations can accommodate only gravity fluid flow. The 241-AX-152 diverter station is currently the only active diverter station in the 200 Areas.

When jumper changes are necessary, a diverter station allows solution streams to be routed without exposing waste transfer lines. Several incoming waste transfer lines are routed into a 189 L (50-gal) receiver tank. A moveable spout on the bottom of the receiver tank directs the flow of waste to any one of several exit pipe funnels located within the diverter station.

Each routing funnel represents a direct transfer line to a specific receiver tank, as shown in Figure B2-45.

A catch tank located in the bottom cell of the diverter station collects any spillage. The catch tank is equipped with a water jet (similar to a steam jet) so that accumulated waste solutions can be transferred to a waste storage tank.

B2.4.10.2.4 Catch Tanks. Catch tanks (Section B2.4.5.1, "Catch Tanks and Double-Contained Receiver Tanks") are underground storage tanks that collect small amounts of waste drained from diversion boxes, valve pits, diverter stations, and other DST equipment. Although older catch tanks are buried directly in the soil, replacement catch tanks are housed in subsurface concrete vaults that provide secondary confinement for the waste.

B2.4.10.2.5 Double-Contained Receiver Tanks. A DCRT (Section B2.4.5.1), sometimes referred to as a catch station or lift station, is a short-term waste storage facility that is also used as a valve pit for waste transfer operations. The DCRT consists of an underground concrete structure that contains a filter pit, pump pit, and a vault in which a catch tank is installed.

B2.4.10.2.6 Supplemental Covers. A supplemental cover is an engineered secondary barrier to knock down spray leaks from transfer-associated structures smaller than $15m^3$ (530 ft^3), including cleanout boxes, that are physically connected to waste transfer lines with an active transfer pump not under administrative lock. A supplemental cover is designed to meet the following criteria: (1) knock down spray leaks of up to 125 psig; (2) construction material is compatible with tank waste; (3) it allows for maintenance and surveillance activities on the transfer-associated structure; (4) it allows a waste leak of 20 gpm to be released at the bottom of the supplemental cover; (5) it is able to withstand a maximum wind speed of 90 mph; (6) it is able to withstand snow or ash load of 45 psf; and (7) it extends to the ground. The requirements for cover operability are defined in HNF-2296, *Justification for Continued Operation of Transfer Lines Having Structures with Less Volume Than the 241-A-A Valve Pit.*

The supplemental covers for COBs have two basic configurations. One configuration has a one piece solid top. The second configuration incorporates a two piece overlapping top to accommodate the vertical leak detector supports. The basic design consists of 1 1/2 in. x 1 1/2 in. x 1/4 in. stainless steel angle frame on two 6 in. x 3/4 in. stainless steel plate footings with 16 gauge stainless steel side panels and 3/8 in. clear plexiglass (acrylic) top. There is a 1/2 in. space between the lower edge of side panels and the top of the footings. The largest COB enclosure required for current operations is 43 in. x 43 in. x 40 in. Figure B2-69 illustrates a standard supplemental COB enclosure. Refer to HNF-2329, *Calculation For Supplemental Covers On Structures Smaller Than 241-A-A*, for details concerning design of supplemental covers installed on COBs.

The supplemental covers designed for Tanks 241-AX-501 and 241-A-A valve pits are constructed of a 30 mm. thick geomembrane, which is resistant to corrosive ingredients in the tank waste. The cover dimensions allow 1/2 in. clearance on all sides and top. The covers completely enclose pit and cover

block including lifting bails and other miscellaneous objects on cover block but exclude valve handles. The cover extends to within 1 in. of the ground. The seams and edges have 1- to 2-in. overlap for added strength. The covers are anchored to the pit wall with concrete anchors. The pit structure is adequate to support weight of the cover. Refer to HNF-2329 for details concerning design of supplemental covers installed on valve pits.

B2.4.10.3 Pumps. The three types of pumps used at TWRS to move liquids or solids from facility to facility are (1) jet pumps in combination with centrifugal pumps, (2) submersible pumps, and (3) transfer pumps. A fourth type of pump mixes in-tank waste to prevent the buildup of hydrogen gas (Section B2.4.14, "Mixer Pumps").

B2.4.10.3.1 Jet Pumps. The components of a jet pump system (Figure B2-46) located within a pump pit are a centrifugal pumps, flexible or rigid jumpers, a flush line, and a flow totalizer. The centrifugal pump supplies motive fluid to the submerged jet pump system. The jumpers contain piping, valves, and pressure and limit switches. Typically, up to four jet pumps are manifolded to a common waste transfer line.

The combination of a centrifugal pump (Figure B2-47) and jet pump is needed to raise the liquid waste approximately 12 to 15 m (40 to 50 ft) to the pump pit. Raw water fills the jet pump system loop and primes the centrifugal pump for operation. A recirculation loop permits the prime to be maintained on the centrifugal pump while pumping at very low rates.

The centrifugal pump located in the pump pit pressurizes power fluid to the jet assembly. The power fluid passes through a nozzle within the jet assembly and converts fluid pressure head to velocity head, thereby reducing the pressure within the jet assembly chamber. The reduction in pressure allows the interstitial liquid (i.e., liquid within salt cake) to enter the jet assembly chamber and mix with the power fluid. Conversion of velocity head to pressure head above the nozzle lifts power fluid and interstitial liquid to the pump pit.

Jet pump systems are used for salt well pumping. The complete salt well system consists of a jet pump and a 254-mm- (10-in.-) dia salt well casing with a stainless steel salt well screen welded to a Schedule 40 carbon steel pipe. The screen is inserted into the 0.3-m (1-ft) tank riser located in the pump pit. The stainless steel screen portion of the system extends through the tank waste to near the tank bottom. The salt well screen portion of the casing is an approximately 3.0-m (10-ft) length of 254-mm (10-in.-) dia, 300 Series, stainless steel pipe with screen openings (slots) of 1.27 mm (0.050 in.). A flow totalizer, a magnetic element, is attached to the discharge line to measure the quantity of liquid transferred.

B2.4.10.3.2 Submersible Pumps. A submersible pump can be used to raise large volumes of supernatant. The pump motor itself is below the pump intake and is submersed in the liquid being pumped. The pump motor is cooled by the liquid being pumped. A flow director (shroud) installed in the pump helps move the flow past the motor. A sensor shuts off the submersible pump if the submersible pump motor temperature increases.

B2.4.10.3.3 Transfer Pumps. Transfer pumps are installed in a pump pit, with the motor located in the pit and the intake located in the tank waste. Typically, transfer pumps are deep-well, vertical turbine pumps, where the pump intake is a rigid pipe that extends to a fixed depth in the tank waste. Some transfer pumps have a floating intake, which is a flexible jumper connected to rigid pipe that does not extend into the waste. The intake, or flexible jumper, floats on the surface and collects only surface liquids until the jumper is fully extended.

B2.4.10.4 200 East Area Transfer Systems. The active and known inactive transfer systems within the 200 East Area are listed in Tables B2-22 and B2-23, respectively.

B2.4.10.5 200 West Area Transfer Systems. Active transfer lines, line origins, intermediate junctions, and line terminations in the 200 West Area are listed in Table B2-22. The known inactive lines within the 200 West Area are identified in Table B2-23.

B2.4.10.6 Cross-Site Transfer System. The cross-site waste transfer system transports mixed-waste solutions from the 200 West Area to the 200 East Area. The system consists of diversion boxes located in the 200 East and 200 West Areas (241-ER-151 and 241-UX-154, respectively), a vent station, and a reinforced-concrete-encased stainless steel pipeline system approximately 3.7 km (2.3 mi) long.

Four of the six transfer lines placed within the concrete encasement are not usable (i.e., have failed pressure tests). Leak detectors for the cross-site transfer line are located at the diversion boxes. Additionally, 58 encasement test risers are spaced regularly along the concrete encasement between the 241-UX-154 and 241-ER-151 diversion boxes. The test risers provide access to the encasement void space for leak detection purposes. The encasement slopes in both directions from the 241-EW-151 vent station.

The 241-EW-151 vent station is located approximately 457 m (1,500 ft) south of and between the 200 East and 200 West Areas. The elevation of the top of the vent station or cover blocks is 231.8 m (760.5 ft) above sea level. Because the vent station is 15 m (50 ft) higher than the diversion boxes in the 200 East and 200 West Areas, venting the transfer line following a transfer allows liquids to flow from the vent station to catch tanks located in the east and west diversion boxes.

Salt well and miscellaneous 200 West Area plant wastes are collected and stored in Tank 241-SY-102. The waste is transferred from Tank 241-SY-102 through the 244-S DCRT, diversion boxes, and cross-site system structures to the 200 East Area. The waste is then routed through the 244-A DCRT to the 241-A-A valve pit for transfer to the 200 East Area DSTs, where the waste is held for later processing at the 242-A Evaporator. The specific routing of waste through the 200 East Area and the waste destination depends on the type of waste, the availability of tanks for storage, and current procedures controlling waste transfers.

Another cross-site transfer system known as the Replacement Cross-Site Transfer System has been constructed and is described in Addendum 2.

B2.4.11 Common Sitewide Instrumentation and Surveillance Monitoring Systems

The instrumentation and other supporting systems and equipment used in TWRS are common to most facilities on the Hanford Site. The following systems are discussed:

- Computerized surveillance systems
- Liquid- and sludge-level monitoring system
- Leak detection and monitoring systems
- Waste sampling equipment and methods
- Temperature monitoring
- Dome-space gas monitoring
- In-tank surveillance cameras
- Criticality detection systems.

B2.4.11.1 Computerized Surveillance Systems. The two primary computerized surveillance systems, within TWRS include the Tank Monitoring and Control System (TMACS) and the Computer Automated Surveillance System (CASS). The two systems are discussed in following subsections.

B2.4.11.1.1 Computer Automated Surveillance System. The CASS is designed to provide central, computerized surveillance of the Hanford Site underground waste storage tanks and their associated facilities. The central CASS Facility is located in the 2750-E Building in the 200 East Area and is manned on a 24-hour basis by Waste Tank Operations.

The CASS covers most of the tank farm monitoring systems. Field detection and monitoring instrumentation systems are essentially the same for all individual tanks within the tank farms. Detection instruments send data to monitors in the tank farm instrument enclosures, to monitors in the appropriate instrument buildings, or to both. All measured values are converted to electrical signals before transmission to CASS substations. Most monitored data is transmitted automatically to the CASS; however, some data is measured and recorded manually and maintained at each farm without input into the CASS.

Process parameters continuously monitored by the CASS are as follows:

- Substation failures
- Leak detection pit alarms (high radiation, high liquid level)
- Tank pressure alarms (high pressure and vacuum)
- Leak detectors on tank annulus floor

- Exhaust fan failure alarms
- Radiation detection units (annulus exhaust CAMs, HVAC exhaust stack CAMs, instrument building panel alarms)
- Process line, encasement, process pit leak detectors, and cleanout boxes leak detectors.

The CASS scans the following parameters hourly:

- Actual liquid-level measurement
- Deviation from liquid-level baseline criteria
- Failure of liquid-level monitoring equipment.

Signals are monitored and displayed on panel boards within the associated instrument building. Each tank has an associated local panel board, transmitter enclosure, and assigned portion of the pressure switch rack. Some signals are transmitted to the 242-A Evaporator control room for the 200 East Area, and to the 242-S control room for the 200 West Area, as well as to the DST instrument buildings. (For additional information on the 242-A Evaporator, refer to WHC-SD-WM-SAR-023, *242-A Evaporator/Crystallizer Final Safety Analysis Report*.) Instrument panel boards display or record (for both display and record) the monitored conditions of the various parts of the tank farms. Panel board information includes pressure and high-liquid level (currently not in use) in each primary tank, readings from leak detectors and probes monitoring airborne radiation in the annuli, high-liquid level (currently not in use) and high radiation readings in leak detection pits, and alarms relating to operation of the ventilation systems.

Separate CASS program files are kept for data categories and are held in the program's 32-day historical file. Data is transferred daily to the permanent retention file. The CASS reports contain information either received automatically or manually entered through a computer terminal. A few readings (e.g., selected liquid level and weight factor) are not CASS files. These readings are measured manually on each shift and then manually recorded and retained by tank farm and evaporator process control personnel. Reports are generated on standardized report forms. Each tank farm can select and customize the data on the reports.

B2.4.11.1.2 Tank Monitoring and Control System. TMACS was originally designed to monitor waste tank temperatures but has since been expanded for monitoring of other parameters and will eventually replace the CASS. The system continuously monitors temperatures, liquid levels, tank pressures, ventilation flows, and hydrogen gas concentrations. The data inputs to TMACS originate within the tank farms and associated facilities, which communicate by means of dedicated telephone lines with the TMACS main computer system located in the 2750-E Building.

TMACS provides real-time dynamic graphics depicting the status of all parameters associated with the monitoring tank. Features include alarm management, data storage, data trending, reporting, event logging, failure status, and graphical presentation using a hierarchy of displays that allows

progression from the general to the specific. TMACS receives two major data inputs: PANALARM and ACROMAG.

PANALARM is the existing tank farms alarm and annunciator system. The inputs to TMACS include all tank farm alarms, tank pressure, radiation levels, and leak detection signals. TMACS samples the PANALARM system data points at a rate of approximately 100 points per second.

ACROMAG is a data processor that currently collects liquid level data from the ENRAFs (Section B2.4.11.2.1) vapor space gas sample data directly from the standard hydrogen monitoring system, tank vapor space pressure data, tank waste and vapor space temperature data, and the ventilation system exhaust flow rates. TMACS samples most of the SST temperature data every 10 minutes and most of the DST temperature data every 60 seconds. Sample rates for other data (e.g., ENRAF data; standard hydrogen monitoring system data, pressure data, and ventilation flow rates) are based on user needs or requirements.

The user can select a single tank from a graphic display of the tank farms. The tank level is displayed as a horizontal line above the tank bottom (the position of this line changes dynamically as the liquid level in the tank changes). Temperature values are displayed on the basis of the height of the temperature sensor. Tank pressure values (both low and high ranges), as well as the percentage hydrogen (for tanks with a standard hydrogen monitoring system installed), sample flow, and discrete alarm signals are provided on the graphic display. Dynamic trend graphs can be obtained by selecting the parameter of interest from the graphic display. For example, the user can select a temperature sensor and the period of interest (e.g., 1 hour, 8 hours). The current, low, and high numeric values over the selected period are displayed next to the sensor number.

B2.4.11.2 Liquid- and Sludge-Level Monitoring System. The following describes liquid- and sludge-level monitoring in the waste tanks.

B2.4.11.2.1 Liquid-Level Monitoring. Liquid-level monitoring is a primary tool for maintaining strict accountability of radioactive and chemical waste solutions. Surveillance of the liquid level in an isolated tank gives the first indication that liquid may be leaking from the tank or (an unlikely possibility) that liquid is intruding into the tank. Liquid levels in all waste storage tanks are monitored and recorded.

Three devices are used to monitor the liquid level in the primary tanks.

- A level-indicating transmitter assembly provides continual automatic monitoring. The level-indicating transmitter may include Food Instrument Corporation (FIC) gauges and ENRAFS.
- For some tanks, a level indicator assembly or manual tape provides a manual backup for the level-indicating transmitter.
- A high-level detector provides the alarm input for a high liquid level. (The high-level detectors are disconnected in flammable/ hydrogen gas "watch list" tanks.)

Food Instrument Corporation Gauges. Many underground storage tank liquid levels in the 200 East and 200 West Area tank farms are measured by automatic FICs (and read by CASS or TMACS). An automatic FIC gauge (Figure B2-48) consists of the following:

- Plummet suspended on a tape
- Tape reel
- Rotameter
- Sight glass
- Control box
- Air supply
- Flush spray attachments.

FIC gauges are mounted on selected risers. The plummet of an FIC gauge is suspended to rest at the liquid surface in the tank and is raised and lowered to contact the liquid surface. The reading is accomplished either automatically or manually, depending on the FIC. An FIC can operate in one of three distinct modes: automatic, intrusion, and manual.

The automatic liquid-level gauges are connected to the CASS. The FIC gauges can be read automatically or manually in the field or can be requested from the CASS. Automatic liquid-level measurement devices are installed in many of the waste tanks and catch tanks in the tank farms in the 200 East and 200 West Areas. The gauges are mounted on selected risers. The controls automatically raise and lower (bob) the plummet position at the air-liquid interface at 1- to 1.5-minute intervals. When the plummet contacts liquid, an electrical circuit to ground is completed, thus indicating the liquid level. The level-indicating transmitter outputs are transmitted directly to the CASS. Level readouts are also displayed locally at the tank gauge.

When the liquid in a tank has been processed and a sludge or salt cake layer has been left in the tank, the automatic FICs are placed in the intrusion mode. At this point, the main concern is detection of incoming liquids (intrusion). In this method of monitoring surface levels, the plummet in the FIC gauge stays suspended above the salt cake surface. This method is used only to monitor tanks with solid surfaces. An automatic FIC that fails must be read manually and the data input into the CASS.

ENRAFs. An ENRAF (Figure B2-49) consists of a sight glass, control box, and flush spray attachments. ENRAF Series 854 level gauges are certified by Factory Mutual for the National Fire Protection Association (NFPA 70, *The National Electric Code*) hazardous Class I, Division 1, Groups B, C, and D Locations. The measuring principle for these gauges is based on the detection of variations in the weight of a displacer suspended in the process fluid. The displacer is connected to a wire wound on a precision measuring drum. A level change causes a change in the weight of the displacer, which is detected by the gauge force transducer. Electronics within the gauge cause a servo motor to adjust the position of the displacer and compute the tank level

on the basis of the new position of the displacer drum. The gauge displays the level in decimal inches. A digital output signal (analog optional) transmits the level data for remote data processing.

Manual Tapes. Two types of manual tapes are used in TWRS. The flake-box type, described here, is of a more recent design. The older type is generally much taller and has an exposed tape reel. Despite their differences, both operate in essentially the same manner. The reel is permanently attached to the tank riser, and the measuring tape is attached to the reel. The measuring tape is inserted through the hole in the riser flange. Readings are obtained by attaching a portable direct current meter to the terminals provided at the riser. The zero position on the manual tape represents the bottom of the tank or sump.

Flake-box housings are located on primary tank risers (on most DSTs and DCRTs) and on some annulus risers (241-AN, 241-AP, and 241-AW Tank Farms). A flake box consists of a steel housing containing a reel that is wound with a calibrated stainless steel tape. A probe is attached to the end of the measuring tape, which extends down through the tank riser. Flake boxes serve different purposes in different locations. Installed on a primary tank, they provide a means of determining waste liquid level within the tank. On a tank annulus, flake boxes can detect leakage from the primary tank into the annulus.

The elevation of the probe is adjustable by turning a hand crank on the side of the housing to wind or unwind the steel tape. A portable direct current ammeter is connected to the tape and ground (riser flange) to determine when the electrical circuit to ground is completed. The plummet is lowered until the electrical circuit is completed, and the liquid level at the point of contact is read manually from the tape housing. The liquid level in the tank (height in feet from the bottom of the tank or sump) is determined from graduations on the steel tape as measured relative to the tank riser flange, the cross bar or fixed index point on those reels with plexiglass housings, or the edge of the access hole. The zero position on the steel tape represents the bottom of the tank or sump. For most manual tapes, a 13-mm (0.5-in.) line from an instrument air header continually purges the level indicator housing into the primary tank.

On the tanks lacking level instrument systems, liquid-level readings can be obtained either with the manual tape or by means of a calibrated, insulated wire (zip cord). Electrodes are attached to the premeasured, insulated wires. In each instance, readings are obtained by attaching a portable direct current meter to the terminals provided at the riser and lowering the electrodes until deflection of the direct current meter indicates contact with the liquid surface.

High-Level Detectors. The high-level detector assembly consists of an electrode (two electrodes in the 241-AP Tank Farm) suspended from the riser. High-liquid level is detected when liquid contacts the electrodes and completes the electrical circuit across the electrodes. Readings in excess of tank high-level limits will engage the associated area pump interlock (shutdown) system and provide audible and visual alarms.

Weight Factor and Specific Gravity Monitoring. The weight factor and specific gravity monitoring systems (Tank 241-AW-102, DST leak detection pits, and SSTs with operable salt well pumps) consist of three small pipes (known as dip tubes) inserted into a tank through a riser. During operation, compressed air purges are supplied to the dip tubes at a controlled rate, the differential pressure is measured, converted to liquid level or specific gravity, and electrically transmitted to indicators at a remote location (Figure B2-50).

B2.4.11.2.2 Sludge-Level Monitoring. A solid or sludge layer is commonly formed in the bottom of waste storage tanks as the contents concentrate and solids precipitate. The sludge level must be monitored because changes in the sludge level indicate a change in tank solution makeup and, in some instances, could clarify apparent changes in liquid levels.

Two methods are used for measuring sludge levels: (1) a steel doughnut attached to the bottom of a calibrated tape (Figure B2-51) and (2) the ENRAF described in Section B2.4.11.2.1.

- A calibrated tape is attached to the doughnut cable and lowered until the tape becomes slack. The tape reading indicates the sludge level.
- An ENRAF calibrated to a different density (higher density than supernatant) is used to detect the sludge level in a tank.

B2.4.11.2.3 Single-Shell Tank Farm Liquid- and Sludge-Level Monitoring. The surface levels of tanks are monitored by using a manual tape or an automatic level-indicating transmitter. Manual tape readings and manual surface-level readings, taken with the manual-mode level-indicating transmitter gauges, are input to the CASS and readings from level-indicating transmitter gauges connected to CASS transfer automatically. The CASS alarm sounds if the readings are outside set limits. Data from level-indicating transmitter gauges connected to TMACS are transferred to the CASS.

Liquid observation wells have been installed in many tanks to determine interstitial liquid levels within the tanks. Gamma, neutron, or acoustic probes are lowered into the wells to measure the levels. The data from the fully automatic measurements is input into the CASS.

B2.4.11.2.4 Double-Shell Tank Farm Liquid- and Sludge-Level Monitoring. Several methods are used to measure the liquid level in a tank. In all instances, the measurement represents the amount of liquid (in feet and inches) from the bottom of the tank. This figure is multiplied by a conversion factor to calculate the volume (in gallons). In all 23-m-(75-ft-) dia tanks, a 25 mm (1 in.) depth of liquid represents a volume of 10,410 L (2,750 gal).

Sludge-level cables are found at each DST farm. The sludge-level assemblies are bolted on risers.

B2.4.11.3 Leak Detection and Monitoring Systems. In addition to the liquid-level monitors used for leak detection (discussed in Section B2.4.11.2, "Liquid-and-Sludge-Level Monitoring"), dry wells and laterals monitor liquid

intrusion to the soils surrounding and supporting the underground tanks as a second method of leak detection. Dry wells are vertical next to the tank, and laterals are below the tank. A number of wells are randomly situated inside a tank farm or located adjacent to specific tanks about 2 to 3 m (6 to 10 ft) from outer walls of a tank. In Hanford Site soils, liquids spread horizontally, as well as vertically, and a waste tank leak is indicated by increased levels of radiation in these wells. The term "dry" is used because the wells are located above the groundwater table. Leak detection systems are also provided for pits and diversion boxes (Figure B2-52).

Dry wells are mild steel casings, most of which are open at the bottom end to allow any subsurface liquid to enter and rise in the pipe. Their depths range from 23 to 76.2 m (75 to 250 ft). All new dry wells are grouted at the base and around the top to reduce surface water penetration into deeper soil. Presently, approximately 750 monitoring wells are located in the 200 East and 200 West Area SST farms.

Instruments for detecting and confirming leaks in underground storage tanks are inserted through various types and diameters of access channels located beside and underneath the tanks. The instruments are lowered to a predetermined depth to monitor radiation levels.

The probes used to detect radiation within the dry well area are scintillation or Geiger-Mueller probes. A scintillation probe is used in wells with a history of low-level radiation. A Geiger-Mueller probe is used in wells that have higher radiation levels. This type of probe measures the radiation-induced ionization occurring in the gas-filled tube of the instrument. Data retrieved from the radiation readings taken at these dry wells is transmitted to the CASS.

B2.4.11.3.1 Single-Shell Tank Farm Leak Monitoring. Internal tank instrumentation and external dry wells detect leaks in the SSTs. The dry wells are located around the circumference of most tanks and throughout the tank farms. The 241-A Tank Farm and parts of the 241-SX Tank Farm are also provided with lateral (horizontal) dry wells. The lateral dry wells are not currently used to monitor leakage to the soil.

The dry wells are open-bottomed, mild steel casings of either 152- or 203-mm (6- or 8-in.) dia and depths ranging from 23 to 45.7 m (75 to 150 ft). Radiation probes determine the radiation profile in the dry well. The dry-well monitoring systems require electrical power when in use.

B2.4.11.3.2 Double-Shell Tank Farm Leak Monitoring. In a typical DST, three conductivity probes are spaced in the annulus around the tank center at 120° intervals. However, in the 241-SY Tank Farm, only one conductivity probe is mounted in each tank annulus.

For the concrete shell portion of a DST, the leak detection system is known as a "leak detection pit weight factor" system (Figures B2-18, B2-53, and B2-54). This system monitors liquid level in leak detection pit sumps. A small amount of water is kept in the leak detection pit sump so that the operability of the dip tubes may be constantly verified. Detections of higher-than-normal liquid levels are investigated. Two annunciators, one at

the instrument building and the other at the evaporator control room, alarm upon detection of a leak by either leak detector.

Leak detection pit instrumentation consists of a liquid-level detector, a thermocouple, and a radiation detector.

- **Liquid-Level Measurement System**—Each leak detection pit has a specific gravity unit used for liquid-level measurement. The specific gravity monitoring instrumentation converts the pneumatic specific gravity signal to an electrical signal for transmission to a monitoring station.

  Two of the three specific gravity dip tubes in leak detection pits are below a maintained water level. One of these dip tubes is located near the pit floor; a second dip tube is located 254 mm (10 in.) above the floor. The third dip tube is located near the top of the well, above the water level. The differential pressure between the two pipes below the water measures the specific gravity; the differential pressure between the top and the lowest dip tubes measures the weight factor (Figure B2-54).

- **Temperature Measurement System**—Temperature measurement elements (thermocouple assemblies), which are installed at the bottom of each of the leak detection pits, are used in the event of a leak from the annulus tank that drains to the leak detection pit. A dual thermocouple assembly is mounted below the water level in each leak detection well. Temperature measurements may be read in the respective instrument buildings or on the CASS.

- **Radiation Measurement System**—A radiation detector is located in a dry well adjacent to the leak detection pit as part of the leak detection system. Detection of either high radiation level (indicating a potential leak) or radiation detector failure annunciates alarms.

Transmitter enclosures are provided for leak detection pits in the DST farms. A typical enclosure shown in Figure B2-55, contains the following pneumatic transmitters:

- Specific gravity transmitter

- Weight factor transmitter (provides a signal to the leak detection pit weight factor gauge) and alarm switch (provides a signal to the leak detection pit weight factor alarm switch)

- Pressure transmitter (transmits primary tank pressure to high/low pressure alarm, annunciators, and narrow-range [-1 to 0.2 kPa] [-4 in. to +1 in. WG] pressure recorder)

- Pressure transmitter (transmits primary tank pressure signal to the wide-range [-2.5 to 20 kPa] [-10 in. to +80 in. WG] pressure recorder).

Transmitters for pressure, weight factor, and specific gravity convert hydrostatic pressure differences (across dip tubes) into pneumatic signals. The pneumatic signals are transmitted to the pressure switch rack, in the instrument building and activate the respective weight factor alarm switches. These alarm switches convert the pneumatic signals to electrical signals that energize annunciators on instrument building panel boards.

Pit/Box and Transfer System Leak Detection System. Part of this leak detection system encompasses the leak detection equipment associated with the pump pits, sluice pits, valve pits, cleanout boxes, diversion boxes, transfer boxes, and some encased transfer lines. This part of the system includes dual probe electrodes, induction-type relays, fail-safe relays, transmitters, and reset switches. The other part of this system monitors some transfer lines in which 51-mm (2-in.) test risers are installed to provide radiation monitoring and leak detection capability.

Leak detection conductivity probes are located in central pump, tank, annuli, leak detection, valve, flush, and service pits, and in cleanout boxes. Identical control stations (each near the serviced tank) hold single-mounted detection monitors for the central pump, annulus pump, and leak detection pits.

B2.4.11.4 Temperature Monitoring Systems. Temperature monitoring in the waste tanks is required to maintain tank operating conditions. The temperature data provides information about the waste temperature within a tank and identifies an accumulation of solids, or "hot spots." In addition, during transfers temperatures are recorded for the receiving tanks.

B2.4.11.4.1 Single-Shell Tank Farm Temperature Monitoring. Internal tank temperatures are measured with profile thermocouple trees that consist of steel pipes with 4 to 18 thermocouples per tree, usually starting 102 mm (4 in.) from the bottom and placed at 0.6-m (2-ft) intervals up the tree. For tanks lacking a thermocouple tree, a single thermocouple is inserted in the liquid observation well. Temperatures may either be read and recorded manually or transferred automatically to TMACS.

B2.4.11.4.2 Double-Shell Tank Farm Temperature Monitoring. The temperature of each DST and its contents is monitored by using thermocouple elements and digital temperature equipment located in the associated instrument building.

Thermocouple elements are installed during construction of each tank in the following locations (Figure B2-56):

- Insulating concrete (all dual thermocouple elements)
- Primary tank lower walls
- Concrete foundation
- Concrete walls and haunch
- Concrete dome.

The thermocouple system, shown in Figure B2-56, provides access to thermocouple elements located in the liquid in leak detection pits and at 18 different depths in the primary tank contents.

Thermocouples, either individual or installed on thermocouple trees, extend down through the tank risers into the tank contents. Temperature data from these thermocouples can be used to chart a temperature progression from the bottom to the top of the tank over time (a "profile"). In tank farms equipped with stationary temperature display systems, no provisions exist for taking temperature readings at the tank risers. The thermocouple signals are sent directly to the instrument buildings.

A probe with thermocouple elements is suspended in each primary DST. The end of the probe is approximately 152 mm (6 in.) above the bottom of the tank, and the first thermocouple element is 102 mm (4 in.) above the end of the probe and approximately 254 mm (10 in.) above the tank floor. The probe design is shown in Figure B2-57.

Thermocouples are also installed a few inches above the bottom of the tanks at different locations from the center. These thermocouples are specially designed to measure sludge temperatures. The thermocouple arrangement for a representative tank from 241-AP Tank Farm is shown in Figure B2-58.

Dome Thermocouples. These thermocouples monitor temperatures in the tank dome.

Tank Knuckle Thermocouples. Only one or two thermocouples measure the temperatures in the tank knuckles.

Air Lift Circulator Thermocouples. These temperature-monitoring devices are used primarily in AWF tanks. Each air lift circulator is equipped with several temperature elements that can detect hot spots. Each of the 22 air lift circulators have attached thermocouples that extend 76 mm (3 in.) above the liner bottom.

Sludge Thermocouples. Sludge thermocouples detect accumulations of heat-generating solids and are located near the tank bottom.

Sensor Locations. Thermocouples are located throughout the insulating concrete, foundation, and concrete shell.

- **Insulating Concrete**—Thermocouples in the annulus monitor temperatures, the limitation of which is unimportant for ensuring the structural integrity of the tank and concrete shell. Thermocouples are embedded in the concrete layer directly under the primary tank and the foundation to ensure that a uniform temperature is maintained throughout the tank. The thermocouples are close to the underside of the primary tank liner bottom and are equally spaced in a circular arrangement. Additional thermocouples contact the outer surface of the primary tank shell.

  Twenty-four thermocouples are embedded in the insulating concrete pad between the primary and secondary tank (Figure B2-56). The

thermocouple spacing varies slightly to avoid interference with the insulating concrete drain slots. Thermocouple elements attached to the primary tank wall in the annulus monitor the temperature of the tank wall just above the lower knuckle.

- **Foundation**—The foundation thermocouples lie between the bottom of the concrete shell and the earth below. These thermocouples, arranged in pairs, measure temperature gradients in the concrete base.

  Maximum heat transfer between the temperature element and the conduit is achieved by loosely packing aluminum foil into the conduit cap. Foil is epoxied into place before the conduit end is capped.

- **Concrete Shell**—Thermocouple probes measure temperatures near the inner and outer surfaces of the concrete shell, as shown in Figure B2-56. The thermocouple elements are assembled and installed in pairs. One thermocouple element of a pair is located near the inner surface of the shell (on the annulus wall or annulus/primary tank dome), and the other element is located close to the soil on the outer surface of the shell. Twenty-four thermocouple probe units are embedded in the concrete shell wall and another 24 in the haunch and dome.

Portable Potentiometer. The portable potentiometer provides profile temperature data, which is manually read at the tank riser.

The profile temperature thermowells (from which the readings are taken) have been placed inside the tank and bolted onto an existing riser. On top of the riser is a housing box that consists of a plug receptacle and an indicator dial (also called a "Christmas Tree"). To obtain a temperature reading, the portable potentiometer must be plugged into the receptacle.

Heat Trace Sensing System. Three thermocouple probes are attached to the underside of the tank farm process piping. The conduit and probes are held in place with stainless steel straps.

Thermocouple Terminal Boxes. Six terminal boxes equally spaced around the perimeter of the tank are junction boxes for the thermocouple leads. A seventh terminal box, near riser 4, transmits primary tank thermocouple signals. Thermocouple element locations and corresponding instrument building selector switches are shown in Figure B2-59.

Tank Temperature Retrieval. For selected tank farms, the temperature thermocouples have been connected to selector switches located on panel boards in the farm instrument building. The selector switches are labeled to identify the tank and thermocouple numbers. To obtain a temperature reading, the appropriate selector switch is connected to the readout unit with the plug-in cord provided.

Data Acquisition and Signal Conditioning System. For some of the 241-AY and 241-AZ tank farms, the thermocouples are routed to an instrument building, where data from the thermocouples is received by the data acquisition and

signal conditioning system. Equipment in this system scans the thermocouples on command and converts the thermocouple inputs for direct readout in degrees Fahrenheit at the data acquisition and signal conditioning system building.

The 241-AP Tank Farm has a temperature display system used for monitoring tank temperature data. The system has an alarm and historical tracking features.

B2.4.11.5 Waste Sampling Equipment and Methods. Sampling methods depend on the type of waste in each tank. The methods used in support of various TWRS activities include core sampling, grab sampling, auger sampling, and various types of vapor space or gas sampling.

B2.4.11.5.1 Core Sampling. Core sampling remotely obtains samples of solid or semisolid material stored in the tank farm waste storage tanks. Core sampling consists of boring a hole into the solid-sludge mixture in the tank with a hollow, tubular drill string; capturing a portion of the solid-sludge mixture inside the drill string with a sampling assembly; and retrieving the sampling assembly to the surface.

Push mode core sampling is used to obtain solid or supernatant liquid samples of the high-level waste materials in the underground waste tanks. Specially designed core-sampling trucks and sampling devices are used to obtain samples from the tanks. A cylindrical cross-section of the tank contents below the riser used for sampling is obtained by pushing a sampler bit into the waste (Figure B2-60). During a sampling task, the sampler is lowered into the waste by a hydraulically powered drill string. Drill ram hydrostatic pressure is monitored during the sampling operation to measure waste resistance. A series of core samples is taken repeatedly until the bottom of the tank is reached.

A rotary platform is mounted on the sampling truck. The shielded receiver is mounted at one end of the rotary platform; the drill unit is mounted at the other end of the platform. Liquid or nitrogen gas is used as a hydrostatic head fluid. There is a down force limiter, which shuts down push operations when excessive down forces are encountered. A cylindrically shaped, shielded receiver houses the full sampler once it has been withdrawn from the tank. Also mounted on the sampling truck is an electrically operated winch. The winch unit raises and lowers the drill string and additional equipment that connects the riser of the tank being sampled with the drill rig. The system confines the waste sample throughout the entire operation.

B2.4.11.5.2 Auger Sampling. Auger sampling obtains samples of the surface layer of "watch list" tanks that may generate flammable gases or may contain organic solvents or ferrocyanide compounds. Auger sampling may also be used to obtain core samples in tanks containing less than 200 to 300 mm (8 to 12 in.) of waste. Auger samples are obtained by using a stainless steel, hand-turned auger bit contained in a sleeve. The method is similar to wood boring or ice augering. This method cannot be used to sample low viscosity wastes because the sample cannot be properly captured in the sampler.

B2.4.11.5.3 Supernatant and Soft Slurry Grab Samples. A special sampling bottle contained in a cage can obtain liquid or soft slurry samples

of the waste. The bottle is stoppered and lowered to the desired level. The bottle is then opened so that it fills with liquid, is retrieved from the tank, and is restoppered. This "bottle-on-a-string" sampling procedure conforms to ASTM E-300-73, *Weighted Bottle Sample Method.*

B2.4.11.5.4 Vapor or Gas Sampling. Vapor space or gas samples are required to determine the composition of hazardous, explosive, or flammable gas mixtures containing hydrogen (H_2), ammonia (NH_3), and nitrogen oxides (NO_x). Gas samples are obtained by three methods: (1) a sample may be drawn, by fan, through a device that traps or concentrates certain gas constituents; (2) a sample may be collected in a container; or (3) the gas may be analyzed in situ using portable monitors. The various methods are described in WHC-SD-WM-PLN-101, *Fiscal Year 1996 Tank Waste Remediation System Tank Waste Analysis Plan.*

The standard hydrogen monitoring system (SHMS) was developed to operate in a Class 1, Division 1, Group B (hydrogen) atmosphere. Where necessary, system components are designed to meet NFPA 70 requirements for operating in a hydrogen environment. The SHMS can be installed in four different configurations: (1) on the ventilation exhaust duct of DSTs, (2) on a gas probe assembly, (3) on a multifunction instrument tree assembly, or (4) on a modified riser flange for SSTs with passive ventilation.

The SHMS provides online monitoring of gas samples for hydrogen content and enables more detailed laboratory analyses of grab samples. In addition to monitoring, the system provides recording and alarm functions. On some tanks, SHMS provides hydrogen concentration and sample flow rate data to the TMACS. The system is available in five different models and is designed for use on any tank (see Appendix E, "Flammable Gas/Slurry Growth Unreviewed Safety Question: Justification for Continued Operation for the Tank Farms at the Hanford Site" for a listing of tanks equipped with SHMS). Details are provided in WHC-SD-WM-SDD-001, *System Description Standard Hydrogen Monitoring Systems.*

B2.4.11.6 Dome-Space Gas Monitoring. In addition to the standard hydrogen monitoring system which is limited to hydrogen gas, various sampling techniques and equipment are used to monitor the gases (not limited to hydrogen gas) contained in the dome space. Typically, the dome space gas samples or vapor samples are obtained by using a gas-sample probe (unique to the gas sampling and analysis equipment used) installed in the vapor space above the tank contents. A gas-sample probe may also be part of another Tank Monitoring and Control System, as is the multifunction instrument tree. The multifunction instrument tree, which is inserted into the tank waste and connected to TMACS, contains 27 thermocouples and several probe chambers for gas samples.

B2.4.11.7 Pressure Monitoring Systems. For DSTs, the pressures within the primary tank (i.e., vapor space) are continuously monitored. The primary tank pressure (i.e., tank pressure/vacuum systems) is monitored locally at the instrument buildings and remotely at CASS and TMACS. The primary tank pressure/vacuum pressure monitoring system is required to maintain a negative pressure within the vapor space with respect to atmospheric pressure, maintain structural integrity (i.e., prevent buckling resulting from high vacuum), and detect pressurized releases.

Primary tank pressure is monitored by measuring the differential pressure between the tank vapor space and the atmosphere. The primary tanks are equipped with differential pressure monitoring systems to detect excessive vacuum levels (low pressure conditions) and insufficient vacuum (high pressure conditions). Backup pressure monitoring is provided by magnehelic gauges that are located on tank risers or in local instrument buildings. Pressure switches will activate when tank vacuum is lost (e.g., high pressure) as a result of a loss of ventilation or a pressurized release. The switches will also activate when vacuum is excessive (i.e., loss of ventilation system control). The switches will activate local audible alarms and alarms at CASS and TMACS.

B2.4.11.8 In-Tank Surveillance Cameras. In-tank video systems may be either portable (i.e., installed temporarily for a few hours or days) or permanently installed in a tank dome space. Other cameras are designed to be mounted on top of a tank riser for riser inspection. Cameras used in flammable gas tanks are purged and some are also shielded to prevent sparking. Most cameras are equipped with pan, tilt, and zoom features that are operated from a van or control console located on top of or near the tank. All camera systems normally consist of a camera, lights, associated cabling, and a van containing control and recording electronics.

B2.4.11.9 Criticality Detection Systems. There are no criticality detection systems in TWRS (Chapter 6.0). Neutron detection is provided at 244-TX DCRT (Section B2.4.5.1).

B2.4.12 Cathodic Protection Systems

Underground carbon steel and stainless steel pipelines transfer mixed waste in the 200 East and 200 West Areas (Section B2.4.10.1.1). These pipelines form a network connecting process plants, underground tanks, and an evaporator. The steel of the buried pipe-in-pipe (not concrete encased) is subject to external galvanic corrosion resulting from bacterial and chemical activity in the soil. Cathodic protection systems are provided to minimize waste line failures. The cathodic protection systems protect only the underground piping and not the underground tanks.

The NEMA-U, oil cooled, and silicon-dioxide rectifiers of the cathodic protection system are supplied with three-phase alternating current, are insulated with high-density polyethylene, are completely enclosed for protection from the environment, and are located outside tank farm boundaries. Rectifier output voltages are adjustable. Cathodically protected lines are identified in Table B2-22.

B2.4.13 Interlock Systems

Certain tank farm equipment (e.g., process pumps and HVAC fans) is interlocked to detect abnormal conditions and to protect personnel, equipment, and the environment. The tank farm transfer pumps, for example, are interlocked to shut down when a leak is detected in a process pit or in a transfer line encasement.

Pump shutdown interlock sequences are related to various sources, including leak detectors, flush line limit, and pressure switches. In addition, pumps are equipped with their own internal circuitry to shut down the pump upon detection of abnormal operations (e.g., when the pump motors draw unusually high or low amperage). In general, pumps are interlocked with only those devices that can detect an abnormal condition caused by that pump.

Most transfer pumps in the 200 Area DSTs are interlocked to shut down together if any of the following occur:

- Any one of the master shutdown switches in the 242-A Evaporator control room is activated
- A leak is detected in any tank farm valve pit or pump pit.

Anything that activates the master shutdown relay shuts down the 241-AN, 241-AP, 241-AW, 241-AY, and 241-AZ transfer pumps.

If any one of the process pit leak detector relays is activated because of a leak or circuit failure, the interlock relay will activate and send a "fail" signal to three locations. The first signal activates the leak detection alarm for the process pits in the control room. The second signal is sent to the leak detector transmitter in the instrument building. The third signal activates the master shutdown relay if a leak is detected or a detector fails, and trips other interlocks and stops the pumps.

B2.4.13.1 Pump Interlocks. Pump motor shutdown interlocks are linked to various devices, including leak detectors, flush line limit switches, and pressure switches. In addition, pump motor electrical power supplies are interlocked with the internal protective circuitry of the pump motor to avoid pump damage when the pump motors draw unusually high or low current. Pump control, interlock circuitry, and master pump shutdown system devices prevent contamination of the environment, equipment, and facilities if a leak occurs during waste transfer operations. A pump motor power loss of more than 10 to 15 seconds shuts down pumping operations.

Leak detection devices are installed in 200 East and 200 West Area pump, valve, flush, and service pits; cleanout structures; diversion boxes; diverter stations; and pipeline encasements.

All central pump pit pumps in the 241-A, 241-AN, 241-AP, 241-AW, 241-AX, and AWF tank farm complexes are shut down together, under the following conditions:

- Any one of the master shutdown switches in the 242-A control room is tripped
- A leak is detected in any "A Complex" area valve or pump pit.

B2.4.13.2 Pressure and Limit Switches. DST transfer pumps, jumpers, and transfer lines are equipped with safety interlock systems that prevent operation, initiate an alarm, or both when a hazardous condition exists. Pressure switches are used in flush pits where steam or raw water is supplied for tank farm use. Pressure switches are mounted at strategic locations

within the flush pit to sense line pressure fluctuations. In most instances, when the line pressure exceeds a setpoint, the pressure switch causes the associated pump to shut down.

The pressure switches are valved into the raw water/transfer line piping only when the raw water is required for flushing the transfer line. Excessive pressure at the switch may indicate backflow of radioactive waste into the raw water supply. The switch prevents contamination of the raw water system by energizing the associated waste transfer pumps. Operation of waste transfer pumps is not normally required during line flushing operations.

Limit switches are used in valve pits where transfer line routing changes are made. A limit switch is a device that opens or closes a pair of contacts when the transfer line valve stem is rotated. Typically, a small lever extending from the limit switch moves as the valve position is changed. If a limit switch is tripped during a transfer, an interlock will shut down any associated waste transfers.

B2.4.13.3 HVAC Interlocks. HVAC fans are interlocked to shut down if the exhaust stack CAM units detect high radiation in the exhaust stack; or for actively ventilated SSTs, the 204-AR Vault, and DSTs, if the redundant train is automatically started. The interlock circuitry for HVAC equipment shuts down the ventilation systems if CAMs detect high radioactivity in DST or catch tank exhaust lines.

B2.4.14 Mixer Pumps

The bottom layer of waste in the tank is a nonconvective layer that traps hydrogen. The upper layer is a thinner convective layer that freely releases hydrogen. Submersible mixer pumps mix the waste layers in the tank, thereby releasing hydrogen in a controlled manner. The mixer pump located in Tank 241-SY-101 is a submersible pump 17 m (56 ft) long (Figure B2-61) (LA-UR-92-3196, *A Safety Assessment for Proposed Pump Mixing Operations to Mitigate Episodic Gas Releases in Tank 241-SY-101: Hanford Site, Richland, Washington*). The pump intake is submerged to a waste depth of 3.7 m (12 ft) in the thinner, convective waste layer; the pump discharge is in the bottom, nonconvective layer.

Electrical power is supplied to the pump assembly through conduits inside the support column. These conduits are rated for use in an explosive hydrogen environment, and the support column is filled with inert nitrogen. All motor connections, cable, wire, and conduit connections are located below the waste surface in a nonhazardous location within the tank. The pump is equipped with vibration monitors, flowmeters, and pump discharge pressure meters to detect abnormal conditions resulting from a plugged nozzle, frozen jet, or other malfunction.

The data acquisition and control system has been designed to control the Tank 241-SY-101 mixer pump and ancillary systems and equipment. This system consists primarily of a computer-based system that collects, interprets, and displays data and annunciates alarms. This system also monitors the liquid level in 241-SY-101, and data from this system is used as an evaluation input for mixer pump operation.

Because of the size and operating environment of the mixer pump, a special waste packaging system is used during pump removal. This system consists of a flexible receiver, similar to a sleeve, into which the mixer pump is drawn as it is raised from the riser and decontaminated with high-pressure water jets. The sealed flexible receiver confines liquids as the pump is removed from the tank. The flexible receiver containing the mixer pump is loaded into a shipping container for disposal.

B2.4.15 Light-Duty Utility Arm

The light-duty utility arm (LDUA) system provides the capability to reach locations within the waste tank and waste surface that are not directly under the access risers (HNF-SD-WM-HIE-010, *Hazard Identification and Evaluation for Deploying the Light Duty Utility Arm in Flammable Gas Facility Group 3 Tanks*). The LDUA system deploys a family of tools and sensors, called end effectors, into the underground waste tanks by means of a robotic arm on the end of a telescoping mast. The system collects and manages the data retrieved and generated. Access into the tanks is through existing risers. A Mobile Deployment Subsystem transports the mast and arm between tanks and positions them over a 30.5-cm- (1-ft-) tank riser. Ancillary subsystems support the main deployment equipment, performing such functions as maintaining confinement of the tank atmosphere; decontamination of the mast, arm and end effectors; power distribution; and observation of in-tank operations. The system is operated from the remote Operations Control Trailer located outside the tank farm perimeter fence, up to 275 m (900 ft) from the LDUA deployment vehicle.

End effectors are the tools that perform the specific in-tank tasks of the LDUA system. End effectors (and their storage and transportation containers) are available to provide a basic capability to perform visual surveys and inspections of the tanks, to perform in-tank object manipulation, and to collect small waste samples. The Gripper End Effector has the ability to grasp and manipulate objects in the tank or to manipulate other tools, including waste probes which provide information on the consistency of tank waste. The High Resolution Stereo Video System provides the ability to obtain detailed observational data of the waste and tank structures in areas not visible from the other in-tank surveillance cameras (Section B2.4.11.8, "In-Tank Surveillance Camera"). The extended reach end effector provides additional capability by extending the LDUA reach by 2.08 m (6.83 ft) (HNF-2174, *Hazard Evaluation for Deploying the Extended Reach End Effector (EREE) on the Light Duty Utility Arm (LDUA) in Flammable Gas Facility Group 3 Tanks*). It also provides the ability to sample using a pair of pneumatically operated scoops to collect waste samples. The extended reach end effector incorporates a pair of video cameras (one black and white and one color) plus a lighting system mounted for optimum viewing of the sampling.

B2.4.16 Cone Penetrometer

The cone penetrometer (CP) soil sampling technique uses a portable platform to deploy small-diameter push rods (piping segments approximately 1 m [39 in.] long with screwed connections), or rods, to depths of up to 70 m (230 ft) for vadose zone characterization (HNF-SD-WM-HIE-012, *Hazard*

Identification and Evaluation for Deploying the Cone Penetrometer in the Tank Farm for Vadose Zone Characterization). Soil sensor and soil sampling probes are deployed by mounting them on the front end of CP push rods. These sensors and samplers, which have a conical shaped tip, are slowly pushed to target depth(s), by hydraulic cylinders on the CP platform, which can provide as much as 15,900 kg (35,000 lbs) of pushing force. Set up is limited to areas not directly over tanks, transfer lines, or buried utilities. The CP is not intended for in-situ characterization of tank waste. A trailer-mounted support module is located near the platform, providing electrical power and hydraulic support through power cables and hoses.

B2.5 PROCESS DESCRIPTION

The activities and operations performed within the TWRS facilities are described in this section. Typical activities and operations required to support operations are presented in Table B2-24. The activities and operations, in conjunction with the structures, systems, and components described in Section B2.4, are necessary to the TWRS mission. These activities and operations provide the means to safely manage tank farm wastes and, in conjunction with the institutional and safety programs discussed in Chapter 4.0 provide protective layers to prevent or mitigate unwanted releases of radioactive or hazardous materials. Those operations that are directly relied upon to protect the facility worker, the onsite worker, or offsite individuals are identified in Chapter 6.0, and reflected in the Technical Safety Requirements.

B2.5.1 Waste Storage

The objectives of tank waste storage are to isolate the waste from the environment and to avoid human exposure until final disposition of the waste and associated facilities. Tank waste is stored as outlined here.

- Tanks that may receive and store waste from either processing activities or other tanks are considered in-service tanks, and those that cannot or do not receive waste are considered out of service tanks. All 149 underground SSTs received no additional waste after November 1980. The 28 underground DSTs are all considered in-service tanks and those not on the "watch list" may receive liquid waste from processing activities or other tanks.

- In-service tanks such as DCRTs and catch tanks also receive liquid waste from normal tank farm transfer operations and serve as temporary storage locations.

- The 36 inactive miscellaneous underground storage tanks administered by TWRS may temporarily store some uncharacterized hazardous and radioactive waste. The capacities of these tanks are presented in Section B2.4.

- Although the 204-AR Waste Unloading Facility directly transfers newly generated liquid waste to the underground DSTs, amounts less

than 5,680 L (1,500 gal) of dilute waste may be temporarily stored in the catch tank at this facility.

- The 244-AR Vault is out of service, but each of the four storage tanks and the cell sumps contain some quantities of uncharacterized hazardous and radioactive waste. The tanks in this facility are discussed in Section B2.4.

During storage activities, caustic solution (NaOH in water) may have to be added to waste tanks when the hydroxyl ion concentration of the waste is lower than the minimum level required to control corrosion of the primary tank wall. The caustic solution is added to the tank by one of the following methods:

- In the first method, a vendor-owned tank truck carrying caustic solution is connected to a skid-mounted metering pump. A flexible hose is connected between the metering pump and the tank mixer pump, and the caustic solution is transferred to the metering pump. The caustic solution is then pumped into the tank and distributed throughout the waste until the specific amount of solution has been added. This method is used when the hydroxyl ion concentration in the waste is low enough to potentially cause serious corrosion.

- In the second method, 208-L (55-gal) drums containing caustic solution are connected to a skid-mounted metering pump by means of a flexible hose. The caustic solution is then pumped into the tank through an available tank riser. This method can be used for both high- and low-hydroxyl ion concentration in the waste.

B2.5.2 Waste Transfer

Preestablished routes are used to transfer liquid waste safely from one location to another in response to processing requirements, changing tank storage needs, or tank leaks. The waste transfer operations are as follows:

- Internal transfers
  - Tank farm to tank farm
  - DST to DST within a tank farm
  - SST to DST
  - Catch tank to storage tank
  - 204-AR Waste Unloading Facility to DST.
- External transfers
  - Between process facilities and DSTs
  - From process facilities and the 204-AR Waste Unloading Facility.

Before transferring waste, tank farm operations performs several activities. These activities include verifying that sufficient space is available in the receiving tank, verifying the waste chemistry (by sampling and characterization) to ensure that the waste to be transferred is compatible

with the receiving tank waste, performing criticality safety analyses to ensure that stored waste will remain in a subcritical state, and verifying equipment operability. A baseline material balance is developed before the transfer for both the sending and receiving storage tanks. Before cross-site transfers, the transfer line is prefilled with water to verify valve lineups and routing. The material balance is reviewed periodically during the transfer to provide early leak detection and avoid filling tanks above safe levels. After the transfer, all associated equipment is deenergized; transfer lines are flushed with water; and a final material balance is recorded for both tanks.

B2.5.2.1 Salt Well Jet Pump Design and Description. The SWP process utilizes a motor/pump and jet pump, as shown in the Salt Well Jet Pump Isometric View, Figure B2-65. The jet pump is located near the bottom of the salt well screen. The motive power for the pumping process is provided by a centrifugal pump/induction motor (squirrel cage) unit that is located on top of the salt well screen assembly in the pump pit. The motor and centrifugal pump assembly is hermetically sealed and thus is ideal for pumping hazardous materials. There is no exposed pump shaft, which could be a source of leakage if a packing gland were to fail. The pump and motor assembly, as currently procured for salt well pumping, is rated for or otherwise qualifies for service in Ignition Control Set 2 environments.

The recirculation line liquid flow is measured, and a flushing system is included so that the pump motor and recirculation line can be flushed. The recirculation line flow measurement system includes alarms for low flow and a process trip (trip salt well pump) for loss of recirculation flow. An air operated solenoid isolation valve is provided just after the recirculation line connection point on the pump discharge nozzle, to allow forward or back flushing of the pump. The SWP instrumentation includes a pressure switch that monitors the pump discharge pressure. The pump inlet and discharge legs run inside the salt well screen. Adjacent to the pump-discharge leg are three dip tubes. The dip tube system allows the liquid level and specific gravity in the salt well screen to be determined. This instrumentation allows the SWP system to be placed in the automatic mode. In this mode, the pump runs continuously, and the flow through the pump to the transfer system is regulated by the operation of a diaphragm operated valve. In some instances, a fourth dip tube may be added to provide real time waste dilution during pumping. In normal operation, the pump export flow rates will vary between ~5 and 0.05 gpm.

Water-lancing of the tank waste and the waste surface inside the salt well screen may be necessary to minimize installation interferences. The water-lancing procedure would use up to ~1,900 L (~500 gal.) of hot <93 °C (<200 °F) water to penetrate any crust within the salt well screen and create a circular entry area that is large enough for the jet pump unit and dip tubes within the salt well screen. The amount of water used with the lance is metered at the supply source, usually a portable water truck.

The following paragraphs describe the various components that make up the salt well pumping operation:

B2.5.2.1.1 Salt Well Screen. The salt well screen is purely a mechanical device. The screen assembly consists of several components: the top flange,

pipe, screen assembly, bottom cap, and the flush line. The top or open end has a flange welded around a schedule-40 steel pipe. The flange is used to support and stabilize the screen assembly after it has been installed in an available tank riser. The steel pipe portion of the screen extends approximately one-third of the overall length of the screen assembly. The remaining length is made up of a stainless-steel screen assembly. The length of the screen portion of the salt well assembly is normally established for a particular tank so that, when installed, the screen extends above the surface of the waste.

The salt well casing assembly description provided here is typical, and minor variations (e.g. pipe diameter, location and size of openings, etc.) may occur in some applications. The screen portion extending above the waste surface helps ensure that any liquids in the tank can migrate to and into the screen cavity for pumping. The bottom of the salt well screen assembly consists of two flat plates welded to the stainless-steel screen cylinder. These two plates have a solid cylindrical spacer that keeps them apart. The lower plate has several small holes drilled in the plate, uniformly distributed around the plate, and with one hole in the center. A small pipe is connected to the space between the two plates. This pipe extends the length of the salt well screen, inside the screen cavity, and terminates at a threaded coupling just inside the top of the salt well pipe assembly.

During installation, a flushing water hose is connected to this pipe, and water exits the lower plate holes as the salt well screen assembly is lowered into the waste. This flushing water helps to clear the waste away so that the salt well screen will seat properly in the waste. The bottom of the salt well screen is normally close to the bottom of the tank [nominally 5 cm (2 in.)]when fully installed. The screen is equivalent to a number 400 mesh size, which allows liquid waste to pass through the salt well screen (enter the pump cavity) while preventing solid waste from migrating to the jet pump. The jet pump is installed near the bottom of the salt well screen cavity to maximize the amount of interstitial liquid that can be pumped.

B2.5.2.1.2 Jet Pump Unit. The jet pump is located at the bottom of the salt well screen, as shown in the Jet Pump Unit and Foot Valve, Figure B2-66. It is suspended in the screen cavity by supply and return lines. These lines are connected to the salt well pump plate that is installed in the pump pit. Variable pumping rates are achieved in the SWP operations by using a recirculation configuration with bypass valving to allow slower export rates, while maintaining higher circulation rates. The centrifugal pump pressurizes the motive fluid that is pumped to the jet assembly. The motive fluid passes through the nozzle in the jet assembly and converts the fluid pressure head to velocity head, thus reducing the pressure in the jet-assembly chamber. The reduction in pressure allows the interstitial liquid to enter the jet assembly chamber and mix with the motive fluid. Velocity head is then converted to pressure head above the nozzle, lifting the motive fluid and interstitial liquid to the pump-discharge leg.

The jet-pump unit includes an integral foot valve, which is a check valve that is intended to prevent the drainage of the pumped fluid if the salt well pump is shut down for any reason. A combination flush and mechanical lifting line is provided as part of the downcomer lines from the salt well pit. This flush line is made of small diameter stainless-steel instrument tubing. The

tubing is connected by mechanical fittings and is routed to the front of the foot valve at the bottom of the salt well. If foot valve plugging is suspected, hot flush water can be injected at the face of the foot valve to help dissolve any solidified waste material. The tubing is connected to a handle that extends above the pump pit and through the pit cover. Tank farm SWP operations personnel can lift this handle and exert an upward force on the face of the foot valve to help open it if it becomes inoperable.

The instrument tubing is held in place by a series of small steel rings welded to the jet pump downcomer lines. The jet pump unit is connected to the inlet and outlet (downcomer) piping using pipe union fittings. Thus, in the event of failure of the jet pump unit, it is possible to remove the pipe and jet pump unit and install another jet pump unit in the field.

B2.5.2.1.3 SWP System Piping and Valves. The SWP process utilizes a unique pipe and valving arrangement to convey pumped waste from the tanks. The overall piping arrangement is depicted in Figure B2-67, Salt Well Pump Piping and Instrument Diagram. Not shown is the tank in which the jet pump and salt well screen are installed, or the details of the jet pump recirculation line flushing and flow monitoring subsystem (which is shown schematically in Fig. B2-66). Each of the valves in the main system is described below.

Foot Valve: The foot valve is an integral component of the jet-pump assembly, discussed in section B2.5.2.1.2. It is a check valve that prevents liquid from draining from the supply and return lines of the pumping system.

Drain and Pump Valve (JP-1): This is a two-position, three-way valve. It is located above the salt well pump in the pump pit. The valve is actuated manually by a "T"-bar-type valve handle extension by operations personnel standing on the pump pit cover. The valve can be aligned in the recirculate mode, in which case waste fluid is circulated between the centrifugal pump and the jet pump unit, with pumped liquid leaving the system through the diaphragm-operated valve (DOV) or bypass valve (JR-2). In the drain position, flush water passes through the salt well jumper and then into the tank through the salt well casing drain line. In this mode, flushing water goes through the centrifugal pump and the jet pump, and the foot valve prevents flushing water from entering the tank. In the recirculate position, the pump, jet pump, and foot valve may be flushed by pulling up on the foot valve rod and allowing the flush water to run out the foot valve.

Bypass Valve (JR-2): The JR-2 is a manually operated valve used to bypass flow around the main flow control valve (i.e., the DOV). JR-2 also is operated by a "T" bar handle by operations personnel standing on the pump pit cover. JR-2 is usually opened at the beginning of SWP activities. JR-2 also may be opened for flushing and priming operations.

DOV: The DOV is a plug valve with an air operator attached to position (incrementally open or close) the valve to regulate the flow and therefore the pumping rate of the salt well jet pump system. The salt well pump and jet pump essentially act as a closed-loop flow system. When the DOV and JR-2 valve are closed, fluid is simply pumped around the loop. When the DOV or the JR-2 valve are open, the fluid exits the

pumping loop and travels toward its final destination. The DOV is calibrated by adjusting the spring tension in the valve operator to offset the supplied air pressure.

Discharge and Flush Valve (JR-1): The JR-1 is a three-way manually operated valve. It is operated by a "T" bar valve handle by an operator standing on the pump pit cover. JR-1 can be positioned to allow the pumped waste fluid to enter the transfer line or to allow flush water to flush either the transfer line or the salt well pump and jet pump unit. JR-1 has position indication such that the SWP control system can monitor the valve's position.

Flush Water Check Valves: The flush water supply line is provided with two in-series check valves to prevent tank waste from accidentally being pumped into the flush water supply.

Discharge and Flush Jumper Connections: The flush line and the discharge line are connected to the salt well pump assembly. The discharge line of the salt well assembly is connected to a transfer line nozzle in the pump pit by a flexible jumper. The flushing connection is brought out of the top of the pump pit cover, where a quick-disconnect hose connector is used to allow a flush water hose to be connected.

DOV Control Air Line: The DOV control air line is a flexible air hose that is brought out of the pump pit and is connected to an electrical current to pneumatic pressure converter in the SWP control cabinet.

B2.5.2.1.4 Salt Well Assembly Instruments. This section describes the instruments that are mounted on the jet pump assembly in the pump pit and in the SWP control cabinet. All of the instruments in the salt well pump pit are rated for or otherwise qualify for service in Ignition Control Set 2 environments.

Pump Discharge Pressure Switches: The discharge header has two pressure switches installed as a Defense-in-Depth measure. One pressure switch is calibrated to activate when low discharge pressure is observed. This may be caused by the jet pump unit being plugged, the salt well screen being plugged, or another problem causing poor pump prime. Low discharge pressure results in an alarm and a pump trip after a few seconds of low pressure. The second pressure switch is calibrated to operate when high discharge pressure occurs. High discharge pressure could be caused by the transfer path being blocked (e.g., mis-positioned valve or a plugged line). High discharge pressure results in an alarm and pump trip.

Flush Water Supply Pressure Switch: The flush water supply line is provided with a pressure switch. Activation of this switch, caused by a change in pressure in the supply line, will cause an alarm and pump trip. Activation while pumping is in progress would be indicative of possible waste leakage into the flush system.

Process Flow Transmitter and Totalizer: A flow transmitter and associated flow totalizer are provided. The flow transmitter is a non-contact magnetic instrument that measures total system flow from the

jet pump assembly to the site transfer system. This instrument includes the flow totalizer which displays flow rate and total gallons pumped.

Pump Suction and Discharge Pressure Transmitters: Pressure transmitters are installed on the SWP suction and discharge header. These transmitters are connected to the SWP control system. The suction and discharge pressure readings, in conjunction with the pump flow readings, are used to evaluate pump performance and to detect possible line blockage (either suction or discharge). These devices can also be used to provide backup pressure interlocks in the event the pressure switches fail or are found unserviceable.

B2.5.2.1.5 Salt Well Pump Control System. The SWP control system is designed so that several salt well pumps in different tanks can discharge into a common line. Each pump is interlocked with other pumps in its group so as to provide safe and orderly shutdown of the group in the event of any single pump shutdown. The following paragraphs provide additional detail of the SWP control system. In some cases, existing tank farm equipment, including weight factor instrument enclosures, pump and leak detector control stations, water and air services may be used for salt well pumping in lieu of the skid mounted system. The operation of this equipment will be similar to that described herein for the skid mounted system.

B2.5.2.1.5.1 Control Skid and Enclosures (If Used). The control system is skid mounted on a fabricated frame containing four major enclosures. These enclosures, which protect the equipment contained within them, include:

1) Power Rack and Control Assembly: This unit provides the connection point for the incoming power, as well as housing the programmable logic controller, relay, and termination cabinets. All connections to the in-pit instruments are connected to this unit.

2) Water Tank Enclosure: This enclosure holds a water tank, containing sufficient water so that the dip tube system can operate for extended periods of time between refills (using a water truck). The water is freeze protected and pressurized. The enclosure also contains instruments used to monitor tank water level, pressure, and enclosure temperature.

3) Weight Factor Enclosure: This enclosure contains instruments that are used with the dip tubes to determine liquid specific gravity and tank level. The transfer flow meter and pump pressure and suction meters are located in this enclosure.

4) Air Compressor Enclosure: This cabinet contains a small air compressor that provides pressurized, clean, instrument-grade air for use on the control skid. Primary uses are to (1) pressurize the water tank, (2) provide air for the dip tube system, and (3) control air to the electrical current to pneumatic pressure controller for the DOV.

The skid is located next to the pump pit to ensure a "downhill" slope for the portable instrument lines. These lines connect the dip tubes in the salt

well pump pit to the weight factor cabinet. All exposed skid metal and cabinets are painted to protect them from corrosion.

B2.5.2.1.5.2 Power System. AC power will be provided by a temporary connection to the tank farm electrical distribution system. All electrical equipment is grounded to the skid, and a ground conductor is connected to a facility grounding point (field determined).

B2.5.2.1.5.3 Compressed Air System. The compressed air system utilizes an oil-free, direct-drive compressor typically rated at 91 L/min. at 0.62 MPa (3.2 scfm at 90 psig). Air leaves the compressor and is routed through instrument air filters and dryers before reaching the air receiver. A mechanical pressure gauge, visible from the outside of the compressor enclosure, is provided so that operations personnel can monitor system air pressure.

B2.5.2.1.5.4 Dip Tube System - Salt Well Level, Specific Gravity, and Weight Factor. A key instrumentation system for the SWP activity is the dip tube system and related process instrumentation. The dip tube system consists of three pressure measurement pipes that are positioned uniquely in the waste tank so that the tank liquid level and waste fluid specific gravity can be determined. Two of these pipes extend to the bottom of the salt well screen. One of the tubes extends almost to the bottom of the salt well screen, and another is cut accurately so that the vertical distance from the bottom tube opening is 25.4 cm (10 in.). The third tube is installed and terminates inside the salt well cavity to provide a reference leg for the dip tube system. Alternatively, the reference leg may be terminated outside the tank.

Because openings for two tubes in the bottom of the salt well are below the liquid surface, to measure differential and actual pressure, a "bubbler"-type level measurement system is used. This is a standard industrial process in which air is pumped through the submerged tubes and thus air "bubbles" up through the waste liquid. The amount of air is regulated, and the flow rate can be read by a rotameter in the weight factor cabinet. The pressure measured on each tube corresponds to the pressure head created by the waste liquid.

There is a potential for the dip tubes in the waste to be plugged by the waste and create erroneous readings. To prevent this, a small amount of water is "dripped" (allowed to run down) continuously down the dip tubes while SWP activities are in progress. This water helps prevent the formation of or solidification of waste crystals in the dip tubes. The water is supplied from the water tank on the salt well instrumentation skid (if used) or from the tank farm's raw water supply system. The ends of the pipes at the bottom of the salt well also are cut with a notch in them to help prevent waste from plugging the tubes.

B2.5.2.1.5.5 Leak Detection System. The SWP process uses leak detectors in the various transfer pits to help detect possible waste leakage. These leak detectors are actually conductivity probes mounted ~1.5 cm (0.6 in.) above the floor of the valve and pump pits. Because these pits generally slope toward pit drains, the leak detectors are installed near the low point adjacent to these drains. The instruments work on the principle that liquid in the pits will contact these probes and allow an electrical current to flow. There are

leak detectors in the salt well pump pit, valve pits (if any), the COBs (if any), DCRT pit (as applicable) and at the double shell tank receiving pit. The leak detectors are interlocked with the SWP control system such that any leak detector setting off an alarm will result in a visual alarm, and the salt well pump will automatically shut down, causing an audible alarm.

B2.5.2.1.5.6 Flammable Gas Monitoring. Flammable gas monitoring (WHC-SD-WM-FDC-050) is required in the pump pit and the tank vapor space. In addition to the periodic monitoring requirement in TSR AC 5.11.2 (HNF-SD-WM-TSR-006), continuous monitoring shall be performed as an additional measure of conservatism above and beyond what is required by the analyzed consequences as directed by U.S. Department of Energy, Richland Operations Office (RL) (Wagoner, 1998, *Contract Number DE-AC06-96RL13200 - Authorization Basis Amendment Package Transmittal for Saltwell Jet Pumping of Single-Shell Tanks*). Flammable gas data collected can be used in considering future modifications to controls and as input to resolution of the Flammable Gas Safety Issue.

The Pump Pit Monitor is equipped with an automatic interlock and the Tank Vapor Space Monitor with an alarm to shut down pumping if 25% of the lower flammability limit (LFL) is reached as an additional measure of conservatism not required as a result of analyzed consequences as directed by RL (Wagoner, 1998). If any flammable gas monitoring device measures $\geq$25% of the LFL, salt well pumping will be discontinued until all flammable gas monitors indicate < 25% of the LFL.

B2.5.2.1.5.7 Ventilation. A "Standby" Exhauster (WHC-SD-WM-DB-035, *Functional Requirements for Portable Exhauster System to be Used During Saltwell Pumping*, and HNF-S-0490, *Specifications for a Portable Exhauster System for Waste Tank Ventilation*) will be installed as a Defense-in-depth measure for all tanks to be salt well pumped with the exception of Tanks 241-T-104, 241-T-110, and the SX Farm tanks which are actively ventilated. The exhauster function is to reduce the time at risk if 25% of the LFL is reached. The exhauster is an additional measure of conservatism not required as a result of analyzed consequences as directed by RL (Wagoner, 1998). The "Standby" exhausters are turned on immediately if the flammable gas concentration exceeds 25% of the LFL. The exhauster is designed to provide a flow rate equal to or greater than 5,663 L/min. (200 scfm) and meet Ignition Control Set 2 and all environmental and regulatory requirements. A preventive maintenance program shall be in place as directed by RL (Wagoner, 1998) to provide insurance that the exhausters are operable.

B2.5.2.1.6 Single Shell Tank, DCRT (as applicable) and Double Shell Tank Existing Instrumentation. The source tank (SST), DCRT (as applicable) and receiving tank (DST) have existing instrumentation that will be used in conjunction with SWP activities to provide monitoring for level and temperature.

B2.5.3 Waste Characterization

Characterization of the waste in each tank is an integral part of the effort to control the hazards associated with the radioactive waste stored in the tanks. Specifically, waste characterization (1) assists in the understanding and resolution of safety issues, (2) enables the continued safe

storage and management of the wastes until retrieval operations begin, and (3) supports the development and selection of waste removal, treatment, and final disposal options.

Tank waste characterization is performed specifically in the underground SSTs and DSTs, DCRTs, catch tanks, inactive miscellaneous underground storage tanks, the 204-AR Waste Unloading Facility, and the 244-AR Vault because tank waste is stored temporarily in the tanks of these facilities. Although waste characterization is performed at the other tank farm facilities listed in Section B2.4, those activities are performed to meet regulatory requirements and waste acceptance criteria. Tank waste characterization follows the tank waste analysis plan (WHC-SD-WM-PLN-091, *Fiscal Year 1995 Tank Waste Remediation System Tank Waste Analysis Plan*, and WHC-SD-WM-PLN-101, *Fiscal Year 1996 Tank Waste Remediation System Tank Waste Analysis Plan*).

B2.5.4 Waste Concentration

The tank waste concentration process concentrates and evaporates low-heat-producing wastes stored in the underground DSTs to reduce the volume and generate more available space for waste storage. Evaporation of water and its removal from the waste is the principal process used to save tank space at TWRS and is an integral part of the effort to control the hazards associated with radioactive waste stored in the underground tanks.

The 242-A Evaporator (which is not included in the scope of the BIO and is not a TWRS facility) in the 200 East Area, passive evaporation of water from radioactive decay, and the evaporation of water into the induced draft ventilation air stream through actively ventilated tanks all provide means for concentrating the waste.

B2.5.5 Activities at Miscellaneous Tank Farm Facilities

Operations at the less than 90-day waste storage pad; low-level waste storage pad; cribs, ditches, and ponds; and the vertical storage units support other aspects of managing radioactive and hazardous waste and are discussed briefly in the following sections.

B2.5.5.1 209-E Less Than 90-Day Waste Storage Pad. Activities at this facility, which complies with *Resource Conservation and Recovery Act of 1976*, are governed by tank farm operating procedures and include the following:

- Waste acceptance from waste generators
- Waste acceptance at the less than 90-day waste storage pad
- Inspection of the less than 90-day waste storage pads
- Waste repackaging at the less than 90-day waste storage pad
- Investigation of unknown or suspect waste from a tank farm facility.

B2.5.5.2 Low-Level Waste Storage Pad. Activities at this facility are governed by tank farm operating procedures and may include the following:

- Preparing the bulk low-level waste box
- Preparing the low-level waste sample box
- Filling the bulk and sample low-level waste boxes
- Inspecting the low-level waste staging area weekly
- Assisting the vendor in performing assay service
- Assisting the crane crew in weighing wooden boxes
- Preparing low-level waste boxes for shipment.

B2.5.5.3 Cribs, Ditches, and Ponds. Cribs, ditches, and ponds were used in processing operations to decant low-level radioactive and hazardous waste streams to the soil. This practice is no longer acceptable and has ceased. The cribs, ditches, ponds, and trenches described in Section B2.4 are inactive facilities.

B2.5.5.4 Vertical Storage Units. The vertical storage units described in Section B2.4 stored various pieces of contaminated equipment related to the safe storage and transfer of tank wastes. These facilities are inactive and additional evaluation is needed before disturbing one or more of these units.

B2.6 CONFINEMENT SYSTEMS

Confinement systems accomplish the following:

- Minimize the spread of radioactive and hazardous materials within unoccupied process areas
- Prevent or minimize the spread of radioactive and hazardous materials to occupied areas
- Minimize the release of radioactive and hazardous materials in facility effluents during normal operation and anticipated operational occurrences
- Limit the release of radioactive and other hazardous materials resulting from evaluation basis accidents, including severe natural phenomena and manmade events, in compliance with the guidelines contained in DOE 6430.1A[3], Section 1300-1.4.2, "Accidental Releases."

---

[3]Although DOE 5480.7A, 5480.28, and 6430.1A have been rescinded, the contractor is obligated by the existing contract to meet the requirements stated in these orders.

Because TWRS manages large volumes of liquid wastes, confinement systems are not limited to those for the confinement of airborne materials. The same principles apply for those systems relied upon to confine liquids. Therefore, the confinement systems at TWRS include tanks, transfer equipment (e.g., piping, diversion boxes, valve pits), structures, and ventilation systems. The confinement systems within TWRS that are applicable to a particular facility, structure, or process are described in Section B2.4.

B2.7 SAFETY SUPPORT SYSTEMS

Safety support systems for the TWRS facilities consist of radiation protection, effluent monitoring, and fire protection.

B2.7.1 Radiation Protection Systems

In addition to inherent radiation protection features (e.g., buried tanks and piping and thick concrete walls, roofs, and ceilings), the radiation protection system relies on portable and fixed instruments for detecting radioactivity.

B2.7.1.1 Portable Radiation Monitoring Systems. Portable radiation monitoring systems are used as needed at the tank farms. Portable CAMs are generally placed inside operating facilities for personnel safety. The radiation protection program and selection and use of portable instruments are discussed in Chapter 4.0.

B2.7.1.2 Fixed Radiation Monitoring Systems. Fixed radiation monitoring systems in TWRS facilities include radiation detectors and CAMs.

- **Radiation Detectors**—Radiation detection probes are located in the dry wells adjacent to leak detection pits. The systems serve dual purposes: (1) indicating radiation levels and (2) serving as a backup for liquid detection systems.

- **Continuous Air Monitors**—CAMs sample and monitor air for the presence of radionuclides in areas of potential airborne radioactivity. CAMs are installed in areas such as primary and secondary exhaust stack air outlets, annulus exhaust stack air outlets, and process buildings. However, no fixed CAMs are present within the 200 West Area TWRS instrument and process buildings.

All tank farm fixed radiation detection instruments are designed with fail-safe mechanisms so that any system failure activates an alarm.

B2.7.2 Effluent Monitoring Systems

One exhaust stack effluent monitoring program is associated with radionuclide sampling and monitoring, and a second is associated with ammonia sampling and monitoring. Programs associated with sampling and monitoring

hydrogen gas and other flammable compounds are related to the tank vapor space. The following subsections contain general descriptions of the systems supporting the radionuclide and ammonia gas sampling and monitoring programs.

B2.7.2.1 Stack Radionuclide Sampling and Monitoring Systems. The following sections discuss the stack sampling and monitoring systems.

B2.7.2.1.1 Elements. The stack radionuclide sampling and monitoring system consists of CAMs and fixed record samplers. A stack radionuclide sampling system consists of the following components:

- Sampling probe that inspirates the air sample from the stack
- Sample transport line that transports the sample to a sample collector point (i.e., fixed record sampler) or other detectors (i.e., CAMs)
- Collection or detection devices that collect the sample
- Rotameter that measures flow through the system
- Totalizer or gas meter that totals the sample volume
- Pressure or vacuum gauge that measures the vacuum in the system
- Flow switch that indicates when the sample flow rate falls below specified limits
- Flow regulator that adjusts the flow to maintain specified flow rates through the sampling system
- Vacuum pump that draws the sample stream through the sampling system
- Timer that indicates the time the collection devices have been operating.

Most of the TWRS exhaust stack sampling systems sample isokinetically. The stack sampling probes are sized to sample specified sample flow rates and to measure average stack flow rates. Isokinetic sampling results when the velocity of a particle in the sampled stream does not change (no acceleration occurs) as the particle enters the sample probe nozzle inlet. Isokinetic sampling is discussed in detail in WHC-SD-WM-ES-291, *Tank Farm Sampling System Configuration and Efficiency Study*. Setpoints and system requirements are discussed in WHC-EP-0479, *Facility Effluent Monitoring Plan for the Tank Farm Facility*. The radionuclide monitoring systems used in TWRS are identified in Table B2-25 by facility and stack number.

B2.7.2.1.2 Equipment. The stack sampling and monitoring system (Figure B2-62) comprises record samplers and CAMs.

- **Record Samplers (fixed)**—Data from record samplers is used for regulatory purposes. Record samplers quantify the dose the public receives from operation of that particular emission point.

- **Continuous Air Monitors**—CAMs are used for safety purposes. CAMs are set to alarm if emissions are detected above predetermined levels (WHC-EP-0479-1). CAMs can also be used to provide backup regulatory information.

A record sampler has only a collection filter. A CAM has a detector above or near the collection filter.

Some facility sampling systems have a sampling probe for the record sampler and a sampling probe for the CAM. Sampling systems at other facilities have a single sampling probe, from which the sample is split and routed separately to the record sampler and the CAM.

To ensure that a representative sample is obtained, flowmeters and regulators, flow totalizers, and vacuum pumps control and measure the flow rate through the sampling system, as shown in Figure B2-62. Air coming from the stacks is run through the fixed record sampler filter paper, then the flowmeter and flow totalizer, and finally the vacuum pump, which sucks the air through the system. Flow regulators automatically maintain a specified flow within the system. A flow switch is also provided to (1) prevent damage to the sample collection filter paper, (2) prevent nonrepresentative sampling due to nonisokinetic sampling conditions, and (3) indicate vacuum pump problems (e.g., no flow or a failed condition).

B2.7.2.2 Ammonia Sampling and Monitoring Systems. Ammonia gas monitors are installed in waste tank exhaust trains where ammonia may be present. The two monitoring methods currently used at TWRS are the photoacoustic infrared detection method and the ammonia detector tube method.

B2.7.2.2.1 Photoacoustic Infrared Detection Method. The ammonia monitor at the 241-AW and 241-SY Tank Farms uses the photoacoustic infrared detection method. Samples of the 241-SY exhaust stream are obtained from the exhaust stack downstream of the HEPA filters. The sample probe, constructed of corrosion-resistant or process-compatible materials, is inserted in the ventilation duct through a flange and turned 90° into the flow at the center of the duct. The sample is drawn through a 4-mm- (0.2-in.-) OD Teflon[4] tube inside the 6.4-mm- (0.25-in.-) ID stainless steel tube. The sample line is heat traced between the sample point and the enclosure housing the instrument to avoid sample condensation and freezing. System requirements for the photoacoustic infrared detection method are as follows (WHC-SD-WM-WP-254, *Engineering Work Plan for SY Farm Ammonia Stack Monitor 531-1972*).

- The system shall be capable of measuring ammonia from 10 ppm to 15,000 ppm in a gaseous mixture of ammonia, hydrogen, nitrous oxide, and moist air. Interference from the noted gases will be less than 2% of the total reading.

- Ammonia is to be measured in gas streams with temperatures ranging from 4.4 to 54.4 °C (40 to 130 °F).

---

[4]Teflon is a trademark of E.I. duPont de Nemours and Company, Wilmington, Delaware.

- The ammonia monitor shall have an accuracy of ±10%of reading at 500 ppm.

- The ammonia monitor shall be qualified to sample process gases that are classified by NFPA 70 as Class I, Division 1, Group B.

B2.7.2.2.2 Ammonia Detector Tube Method. The second ammonia monitoring method used at TWRS facilities where ammonia may be present depends upon ammonia detector tubes or similar devices, including a dräeger tube. The ammonia detector tube system consists of a tube containing gas absorption materials and a sample probe inserted into the exhaust stream. This system relies on laboratory analysis of the absorption materials following a chemical reaction with the ammonia in the sample stream. This is not a real-time monitoring method and is not as accurate as the method used at the 241-SY Tank Farm.

B2.7.3 Fire Protection Systems

Fire protection systems at tank farms consist of fire detection, alarm, and suppression elements. Details of the fire protection systems are located in WHC-SD-WM-FHA-020, *TWRS Fire Hazards Analysis*, and details of the fire protection programs are located in Chapter 4.0. Important elements of the fire protection systems are discussed in the following subsections.

B2.7.3.1 Water Supply. All water for the 200 East and 200 West Areas is supplied by two separate systems, the raw water system and the sanitary water system. The systems provide water for sanitary, process, and fire protection uses and are all piped and valved independently. See Section B2.8.1, "Water Supply Systems" for a more detailed description of the tank farm water supply systems.

B2.7.3.2 Fire Suppression and Extinguishing Systems. Fire suppression and extinguishing systems in the tank farm facilities are limited to wet and dry pipe sprinkler systems and a Halon[5] total flooding system. The fire suppression systems associated with each facility are identified in Table B2-26. The adequacy of these systems is discussed in WHC-SD-WM-FHA-020.

B2.7.3.3 Tank Farm Fire Detection Systems. Smoke, heat, and manual fire detection are provided in tank farm facilities where required (Table B2-26). The detectors transmit alarms to the Hanford Fire Department via radio frequency alarm reporters, which transmit a radio signal to the Hanford Site 200 Area East/West Fire Station. Signal types are (a) a trouble alarm (i.e., problem with a system component), (b) a supervisory alarm (i.e., a monitored gate valve being closed), or (c) a fire alarm. The Hanford Fire Department takes appropriate action in response to an alarm. Installation and coverage of fire alarms are in accordance with NFPA 72, 1996, *National Fire Alarm Code*. Adequacy of the location and installation of detectors and alarms is assessed in WHC-SD-WM-FHA-020.

[5]Halon is a trademark of Allied Chemical Corporation, New York, New York.

B2.7.3.4 Fire Hydrants. Fire hydrants connected to the raw water system or sanitary water system grids are located throughout the 200 East and 200 West Areas. Coverage and adequacy of the hydrants are evaluated in WHC-SD-WM-FHA-020.

B2.7.3.5 Fire Extinguishers. Portable fire extinguishers are provided throughout the tank farm facilities. Mobile equipment is also equipped with portable fire extinguishers. Installation of extinguishers, their inspection and maintenance, and employee training in their use are in compliance with NFPA 10, *Portable Fire Extinguishers*.

B2.8 UTILITY DISTRIBUTION SYSTEMS

Utility distribution systems for the TWRS underground waste storage tanks and their associated facilities are as follows:

- Water supply
- Steam supply
- Compressed air
- Electrical power distribution.

B2.8.1 Water Supply Systems

All water for the 200 East Area is supplied from the Hanford Site export water system. Export water is defined as water pumped from the Hanford Site reservoir to reservoirs located in the 200 East and 200 West Areas. Water is distributed throughout the area by two separate systems, the raw water system and the sanitary water system. Raw water is untreated and is used principally for cooling, flushing, and dilution systems. Sanitary water is treated (e.g., filtered, purified) and is used for drinking and sanitary facilities.

Raw export water is pumped from the Columbia River through 1.1-m (42-in.) lines via 182-B (100 B Area) and 182-D (100 D Area) Pump Houses. The water is then pumped to the 2901-X Valve House, where two 0.8-m (30-in.) lines feed the water to the 2901-Y Valve House. The water is again split at the 2901-Y Valve House. One 610-mm (24-in.) line goes to a 11.4-million-L (3.0-million-gal) storage reservoir (282-W), and two 0.6-m (24-in.) lines go to a 12.1-million-L (3.2-million-gal) storage reservoir (282-E). These two reservoirs supply raw water to facilities in the 200 East and 200 West Areas and the 283-E and 283-W water treatment facilities. The two supply lines each have two different cross connections. The 283-E and 283-W water treatment facilities process the raw water into sanitary water for use in the 200 East and 200 West Areas.

Raw water is pumped from the 282-E reservoir by four manually started electric pumps and one standby steam pump that starts automatically. The steam pump is preset to start automatically when the water pressure drops to 621 kPa (90 lb/in^2). Each pump has a rating of 378 L/s (6,000 gal/min) at a total dynamic head of 82.3 to 107 m (270 to 350 ft). This raw water is used

primarily for process needs and fire protection. The fire protection systems are discussed in Section B2.7.3, "Fire Protection Systems."

A portion of the raw water from the 282-E reservoir is diverted to the 283-E water treatment facility for filtering and sanitizing. Water is similarly diverted from the 282-W reservoir to the 283-W water treatment facility. This sanitary water is supplied to the 200 East Area by electric pumps of 202 L/s (3,200 gal/min) total capacity equipped with two steam turbine standby pumps of 76 L/s (1,200 gal/min) total capacity. The sanitary water system provides water for sanitary, process, and fire protection uses.

Due to the (1) lack of redundant water supplies, (2) use of unapproved pumps and controllers, and (3) lack of verification that the water system can sustain earthquake damage, the water supplies do not meet the minimum requirements of the National Fire Protection Association, Factory Mutual, DOE 5480.7A, and DOE 6430.1A[6]. Project B-604, an upgrade of the fire protection water supply, will bring the systems into full compliance with DOE 5480.7A; DOE 6430.1A[6]; and RLID 5480.7, *Fire Protection*.

Both the Columbia River and the emergency cooling water system provide cooling water for the condensers in the AWF (well 299-E2S-6, located approximately 268 m [880 ft] north of the 241-A-CT-400 cooling tower). This system consists of a cold water sump and warm water sump, each with two pumps, and an induced draft cooling tower, all located outside the restricted area, east of the 241-A-401 Condenser Building. The deep well pump and emergency cooling water equipment are supplied with standby power from the backup diesel generator.

All water supply piping that has the potential for contacting other water or radioactively contaminated liquids is protected with backflow preventers. In addition, to monitor raw water usage in TWRS facilities, flow totalizers have been installed in some systems (Table B2-27). The water supplies to the TWRS facilities are summarized by area and facility category (e.g., SST, DST, catch tank) in Table B2-27, and the uses of the water are identified. Additional detailed information is contained in WHC-SD-WM-FHA-020.

B2.8.2 Steam Supply Systems

All systems that require steam are out of service. Most steam lines have been blanked.

B2.8.3 Compressed Air Systems

Pressurized-air supply systems are provided and maintained for the air spargers, jets, process flowmeters (instrument air), ventilation controllers, and air samplers. Emergency (backup) air supply systems are readily available as either portable or stationary compressor units.

---

[6]Although DOE 5480.7A, 5480.28, and 6430.1A have been rescinded, the contractor is obligated by the existing contract to meet the requirements stated in these orders.

The compressors supply the instrument air systems essential for supplying purge air to the tank liquid-level FIC gauges and operating the pneumatic diaphragm differential pressure instruments and diaphragm-operated valves. The instrument air also purges the instruments and instrument lines of condensate.

Interruption of power to the compressors cuts off the air supply needed for the instruments to operate correctly. Backup electrical generators restore power to the compressor motors to restore the air supply system to normal operation. However, in facilities lacking emergency or backup generators or if the backup generator will not start, backup air compressors are available.

In Table B2-28, the compressed air supply provided to the TWRS facilities is summarized by area and facility category (e.g., SST, DST, catch tank), and the use of the compressed air is identified. Additional detailed information can be found in WHC-SD-WM-HIE-007.

B2.8.4 Electrical Power Distribution System

The Bonneville Power Administration (BPA) provides the main source of power to the 200 East and 200 West Areas by means of a major substation known as Midway. The BPA Midway substation, which is located near Priest Rapids Dam, has three 230-kV buses. Each BPA Midway bus section is supplied by a line from the Priest Rapids generating station. BPA Midway buses No. 1 and No. 3 are also supplied by lines that are connected to the Grand Coulee 230-kV substation and to 230-kV substations in the lower Columbia River power system. The Grand Coulee and lower Columbia River substations are interconnected to the BPA 500-kV transmission system. The BPA 500-kV and 230-kV transmission systems are interconnected to all the Columbia and Snake River hydroelectric generating stations and northwest steam generating plants and are also interconnected to California and British Columbia power network systems.

In addition to supplying power to the Hanford Site and other U.S. Department of Energy substations, the Hanford Site 230-kV loop normally supplies power to Ashe and White Bluffs substations. However, if both Midway power sources are lost, sufficient power for normal operations will flow into the Hanford Site 230-kV loop from the Ashe line.

Power from the Ashe line into the Hanford Site 230-kV loop is supplied by a 115-kV line connected to the White Bluffs substation. One 115-kV line at the White Bluffs substation is connected to the BPA Franklin substation. The other 115-kV line is connected to the BPA Benton switch.

Power is fed by two lines to the A-8 substation located near the intersection of the Yakima Barricade and 100 N highways (Route 11A and Route 4 North, respectively). The 251-W Building adjacent to the A-8 substation contains the switchgear and control equipment. The A-8 substation reduces the power and distributes it through four lines each to the 200 East and 200 West Areas. The power is then distributed to each individual tank farm via the 200 East and 200 West Areas power distribution system (Figures B2-63 and B2-64).

B2.9 AUXILIARY SYSTEMS AND SUPPORT FACILITIES

Auxiliary systems and support facilities include administrative areas, control facilities, change houses, communication systems, lighting, and sewage treatment.

B2.9.1 Administrative Areas

The administrative areas within TWRS include the 200 East and 200 West Area tank farm operations buildings and document control centers. The 200 West Area operations offices are housed in mobile facilities that are located within the 200 West Area as needed and in the 272-WA Tank Farm Support Facility. The 200 East Area operations offices are housed in the 272-AW Tank Farm Support Facility. Other TWRS staff are located in the 209-E, 2750-E, 2751-E, 2752-E, 2753-E, and 2704-HV buildings in the 200 East Area, the 1100 Jadwin Building, and the Federal Building in Richland.

B2.9.2 Control Facilities and Change Houses

Control facilities and change houses for the SST and DST farms are listed in Table B2-29. The typical control facility houses all alarms and monitors for ventilation, temperature, and leak detection. Electrical power distribution is also routed from the control facility. The steel frame building, typically 6.1 m (20 ft) by 9.8 m (32 ft), is constructed of fire-resistant materials. The walls are metal-insulated sandwich panels and fiberglass batting with plastic backing insulates the steel-frame roof. Other control facilities or control rooms are located within existing processing facilities. A typical change house has a wooden frame and provides an area for workers to change their personal protection equipment when entering and leaving the tank farm area.

These other control facilities or control rooms monitor alarms and support waste transfers between facilities. For example, within the 242-A Evaporator control room, monitors, alarm annunciators and control systems monitor 200 East Area tank farm system parameters (e.g., ventilation and tank level) or valve positioning, pump operation, and tank level data during waste transfers (WHC-SD-WM-SAR-023). Another example is the 242-S Evaporator control room in which monitors, alarm annunciators, and control systems monitor 200 West Area tank farm system parameters (e.g., ventilation and tank level) or valve positioning, pump operation, and tank-level data during waste transfers. The 242-S Evaporator control room is also used to monitor and control Site transfers from the 200 West Area to the 200 East Area (WHC-SD-WM-SSP-002, *242-S Facility Shutdown/Standby Plan*).

B2.9.3 Communication Systems

Telephones or handheld two-way radios are used for routine and emergency communications in the TWRS facilities. The telephones located in the control areas can be used to contact shift personnel. Telephones located in each change trailer are used to contact Radiological Control Technicians or other

support personnel responsible for responding to abnormal events. All personnel within a facility are alerted to facility emergencies by in-plant signals (e.g., fire gongs and CAM alarms) and to Site emergencies via the crash telephone system.

B2.9.4 Lighting

Lighting, either fixed or portable, is provided at all TWRS facilities to support 24-hour surveillance and monitoring activities. In addition to the existing systems, high-mast lighting is provided in some tank farm facilities (e.g., 241-SY and 241-C) to support 24-hour operations.

B2.9.5 Sewage Treatment

Sewage streams originating in restrooms and change room toilets are routed via underground piping to septic tanks and tile fields for treatment. To prevent cross contamination, these sewage streams are isolated from other facility liquid effluent streams.

B2.10 REFERENCES

ARH-205, 1967, *Design Criteria: Purex AY Tank Farms*, Rev. 0, Atlantic Richfield Hanford Company, Richland, Washington.

ARH-1437, 1970, *Design Criteria: Purex AY Tank Farms*, Rev. 0, Atlantic Richfield Hanford Company, Richland, Washington.

ARH-2930, 1973, *Functional Design Criteria: Salt Cake Storage Facility, 241-SY Tank Farm*, Rev. 0, Atlantic Richfield Hanford Company, Richland, Washington.

ARH-CD-362, 1973, *Functional Design Criteria: Additional High Level Waste Storage Facilities*, Rev. 2, Atlantic Richfield Hanford Company, Richland, Washington.

ARH-CD-549, 1978, *Functional Design Criteria: Additional High Level Waste Handling and Storage Facilities*, Rev. 1, Atlantic Richfield Hanford Company, Richland, Washington.

ASTM E-300-73, 1973, *Weighted Bottle Sample Method*, American Society for Testing and Materials, Philadelphia, Pennsylvania.

DOE 5480.7A[7], 1993, *Fire Protection*, Change 0, U.S. Department of Energy, Washington, D.C.

[7]Although DOE Orders 5480.7A, 5480.28, and 6430.1A have been rescinded, the contractor is obligated by the existing contract to meet the requirements stated in these orders.

DOE 5480.23, 1992, *Nuclear Safety Analysis Reports*, Change 0, U.S. Department of Energy, Washington, D.C.

DOE 5480.28[7], 1993, *Natural Phenomena Hazard Mitigation*, Change 0, U.S. Department of Energy, Washington, D.C.

DOE 5820.2A, 1988, *Radioactive Waste Management*, Change 0, U.S. Department of Energy, Washington, D.C.

DOE 6430.1A[7], 1989, *General Design Criteria*, Change 0, U.S. Department of Energy, Washington, D.C.

DOE-STD-1020-94, 1994, *Natural Phenomena Hazards Design and Evaluation Criteria for Department of Energy Facilities*, Change 1, U.S. Department of Energy, Washington, D.C.

DOE-STD-1021-93, 1993, *Natural Phenomena Hazards Performance Categorization Guidelines for Structures, Systems, and Components*, Change 1, U.S. Department of Energy, Washington, D.C.

DOE-STD-1022-94, 1994, *Natural Phenomena Hazards Characterization Criteria*, Change 1, U.S. Department of Energy, Washington, D.C.

DOE-STD-1023-95, 1995, *Natural Phenomena Hazards Assessment Criteria*, Change 1, U.S. Department of Energy, Washington, D.C.

DOE-STD-3011-94, 1994, *Guidance for Preparation of DOE 5480.22 (TSR) and POE 5480.23 (SAR) Implementation Plans*, Change 0, U.S. Department of Energy, Washington, D.C.

FDM-T-200-00003, 1983, *Aging Waste Facility Description Manual*, Rev. 0, Westinghouse Hanford Company, Richland, Washington.

HNF-2174, 1998, *Hazard Evaluation for Deploying the Extended Reach End Effector on the Light Duty Utility Arm (LDUA) in Flammable Gas Facility Group 3 Tanks*, Rev. 0, Duke Engineering and Services Hanford, Richland, Washington.

HNF-2296, 1998, *Justification for Continued Operation of Transfer Lines Having Structures With Less Volume Than the 241-A-A Value Pit*, Duke Engineering and Services, Hanford, Richland, Washington.

HNF-2329, 1998, *Calculation For Supplemental Covers on Structures Smaller Than 241-A-A*, Rev. 0, Lockheed Martin Hanford Corporation, Richland, Washington.

HNF-EP-0182, 1998, *Tank Farm Surveillance and Waste Status Summary Report for Month Ending March 31, 1998*, Rev. 120, Fluor Daniel Hanford, Inc., Richland, Washington.

HNF-S-0490, 1998, *Specifications for a Portable Exhauster System for Waste Tank Ventilation*, Rev. 1, Lockheed Martin Hanford Company, Richland, Washington.

HNF-SD-WM-HIE-010, 1997, *Hazard Identification and Evaluation for Deploying the Light Duty Utility Arm in Flammable Gas Facility Group 3 Tanks*, Rev. 0, Duke Engineering and Services Hanford, Richland, Washington.

HNF-SD-WM-HIE-012, 1997, *Hazard Identification and Evaluation for Deploying the Cone Penetrometer in the Tank Farm for Vadose Zone Characterization*, Rev. 0, Duke Engineering and Services Hanford, Richland, Washington.

HNF-SD-WM-MAR-008, 1998, *TWRS Mission Analysis Report*, Rev. 3, Fluor Daniel Hanford, Inc., Richland, Washington.

LA-UR-92-3196, 1995, *A Safety Assessment for Proposed Pump Mixing Operations to Mitigate Episodic Gas Releases in Tank 241-SY-101: Hanford Site, Richland, Washington*, Rev. 14, Los Alamos National Laboratory, Los Alamos, New Mexico.

Liquid Level Monitoring Operations Manual, 1991, Course Number 3500050, Westinghouse Hanford Company, Richland, Washington.

NFPA 10, 1990, *Portable Fire Extinguishers*, Rev. 0, National Fire Protection Association, Quincy, Massachusetts.

NFPA 70, 1990, *The National Electric Code*, Rev. 0, National Fire Protection Association, Quincy, Massachusetts.

NFPA 72, 1996, *National Fire Alarm Code*, Rev. 0, National Fire Protection Association, Quincy, Massachusetts.

Resource Conservation and Recovery Act of 1976, 42 U.S.C. 6901, et seq.

RLID 5480.7, 1994, *Fire Protection*, U.S. Department of Energy, Richland Operations Office, Richland, Washington.

SD-340-FDC-001, 1982, *Functional Design Criteria: Project B-340, 241-AP Tank Farm*, Rockwell Hanford Operations, Richland, Washington.

UBC, 1966, *Uniform Building Code, International Conference of Building Officials*, Whittier, California.

UBC, 1970, *Uniform Building Code, International Conference of Building Officials*, Whittier, California.

UBC, 1974, *Uniform Building Code, International Conference of Building Officials*, Whittier, California.

UBC, 1978, *Uniform Building Code, International Conference of Building Officials*, Whittier, California.

Wagoner, J.D., 1998, *Contract Number DE-AC06-96RL13200 - Authorization Basis Amendment Package Transmittal for Saltwell Jet Pumping of Single-Shell Tanks* (Letter 98-TWR-013 to H.J. Hatch, Fluor Daniel Hanford Inc., April) U.S. Department of Energy, Richland Operations Office, Richland, Washington.

WHC-EP-0210, 1990, *Waste Characterization Plan for Hanford Site Single-Shell Tanks*, Rev. 2, Westinghouse Hanford Company, Richland, Washington.

WHC-EP-0479, 1995, *Facility Effluent Monitoring Plan for the Tank Farm Facility*, Rev. 1, Westinghouse Hanford Company, Richland, Washington.

WHC-EP-0681, 1993, *Interim Criteria for Organic Watch List Tanks at the Hanford Site*, Rev. 0, Westinghouse Hanford Company, Richland, Washington.

WHC-EP-0861, 1995, *Status Report for Inactive Miscellaneous Underground Storage Tanks at Hanford Site 200 Areas*, Rev. 0, Westinghouse Hanford Company, Richland, Washington.

WHC-MR-0132, 1990, *A History of the 200 Area Tank Farms*, Westinghouse Hanford Company, Richland, Washington.

WHC-MR-0293, 1992, *Legend and Legacy: Fifty Years of Defense Production at the Hanford Site*, Rev. 1, Westinghouse Hanford Company, Richland, Washington.

WHC-SD-EN-ES-040, 1994, *Engineering Study of 50 Miscellaneous Inactive Radioactive Waste Tanks Located at the Hanford Site*, Rev. 0, Westinghouse Hanford Company, Richland, Washington.

WHC-SD-HS-SAR-009, 1983, *242-T Evaporator Facility Standby/Shutdown to Condition V Safety Analysis Report*, Rev. 0, Rockwell Hanford Company, Richland, Washington.

WHC-SD-RE-TI-053, 1993, *Riser Configuration Document for Single-Shell Waste Tanks*, Rev. 9, Westinghouse Hanford Company, Richland, Washington.

WHC-SD-RE-TI-093, 1991, *Double-Shell Underground Waste Storage Tank-Riser Survey*, Rev. 1, Westinghouse Hanford Company, Richland, Washington.

WHC-SD-SQA-TA-20011, 1996, *Technical Assessment of Workplace Air Sampling Requirements at the Tank Farm Facilities*, Rev. 3, Westinghouse Hanford Company, Richland, Washington.

WHC-SD-TWR-RPT-002, 1996, *Structural Integrity and Potential Failure Modes of the Hanford High-Level Waste Tanks*, Rev. 0, Westinghouse Hanford Company, Richland, Washington.

WHC-SD-WM-DB-035, 1996, *Functional Requirements for Portable Exhauster System to be Used During Saltwell Pumping*, Rev. 0, Westinghouse Hanford Company, Richland, Washington.

WHC-SD-WM-ES-291, 1994, *Tank Farm Sampling System Configuration and Efficiency Study*, Rev. 1, Westinghouse Hanford Company, Richland, Washington.

WHC-SD-WM-FDC-050, 1996, *Functional Design Criteria for Safety Class 3 Flammable Gas Monitors for Single-Shell Tanks*, Rev. 0, Westinghouse Hanford Company, Richland, Washington.

WHC-SD-WM-FHA-020, 1996, *Tank Farms Fire Hazards Analysis*, Rev. 0A, Westinghouse Hanford Company, Richland, Washington.

WHC-SD-WM-HIE-007, 1996, *Tank Waste Remediation System FSAR Hazard Identification/Facility Configuration Verification Report*, Rev. 0, Westinghouse Hanford Company, Richland, Washington.

WHC-SD-WM-PD-046, 1995, *Tank Waste Remediation System Inactive Miscellaneous Underground Storage Tanks Program Plan*, Rev. 0, Westinghouse Hanford Company, Richland, Washington.

WHC-SD-WM-PLN-091, 1995, *Fiscal Year 1995 Tank Waste Remediation System Tank Waste Analysis Plan*, Rev. 0B, Westinghouse Hanford Company, Richland, Washington.

WHC-SD-WM-PLN-101, 1995, *Fiscal Year 1996 Tank Waste Remediation System Tank Waste Analysis Plan*, Rev. 0, Westinghouse Hanford Company, Richland, Washington.

WHC-SD-WM-SAD-035, 1996, *A Safety Assessment for Rotary Mode Core Sampling in Flammable Gas Single-Shell Tanks, Hanford Site, Richland, Washington*, Rev. 0-a, Westinghouse Hanford Company, Richland, Washington.

WHC-SD-WM-SAD-036, 1996, *A Safety Assessment for Salt Well Jet Pumping Operations in Tank 241-A-101: Hanford Site, Richland, Washington*, Rev. 0, Westinghouse Hanford Company, Richland, Washington.

WHC-SD-WM-SAR-023, 1995, *242-A Evaporator/Crystallizer Final Safety Analysis Report*, Rev. 2, Westinghouse Hanford Company, Richland, Washington.

WHC-SD-WM-SAR-027, 1988, *Hazards Identification and Evaluation Report for the Operation of the Grout Facilities & Near Surface Disposal of Grouted Phosphate/Sulfate Low-Level Liquid Waste*, Rev. 2, Westinghouse Hanford Company, Richland, Washington.

WHC-SD-WM-SDD-001, 1992, *System Description Standard Hydrogen Monitoring Systems*, Rev. 0, Westinghouse Hanford Company, Richland, Washington.

WHC-SD-WM-SSP-002, 1988, *242-S Facility Shutdown/Standby Plan*, Rev. 0, Westinghouse Hanford Company, Richland, Washington.

WHC-SD-WM-WP-254, 1994, *Engineering Work Plan for SY Farm Ammonia Stack Monitor 531-1972*, Rev. 0, Westinghouse Hanford Company, Richland, Washington.

Figure B2-1. Facilities in the 200 East Area of the Hanford Site.

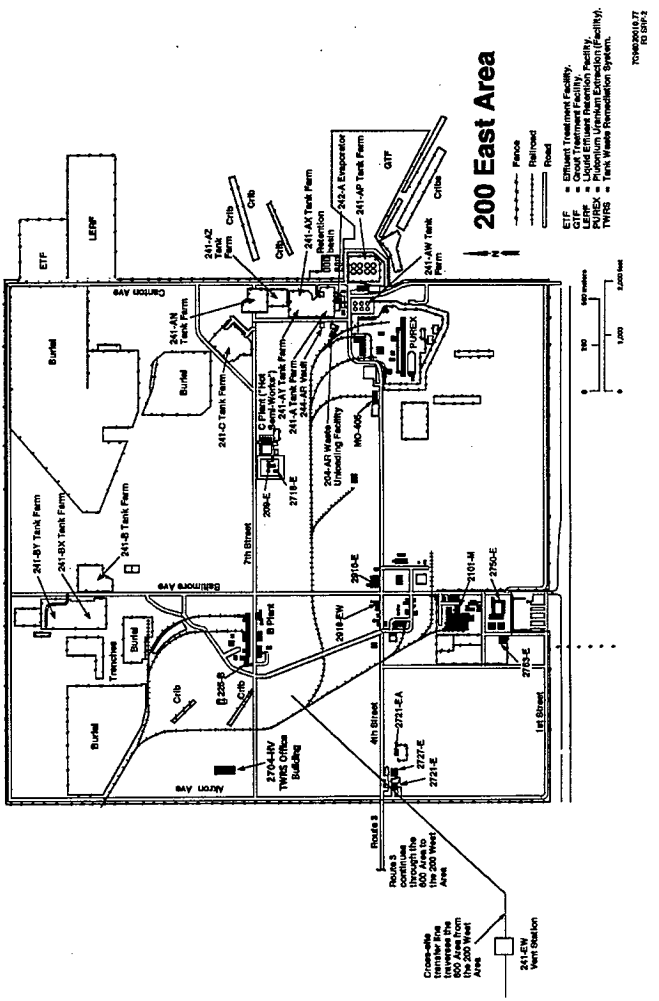

Figure B2-2. Facilities in the 200 West Area of the Hanford Site.

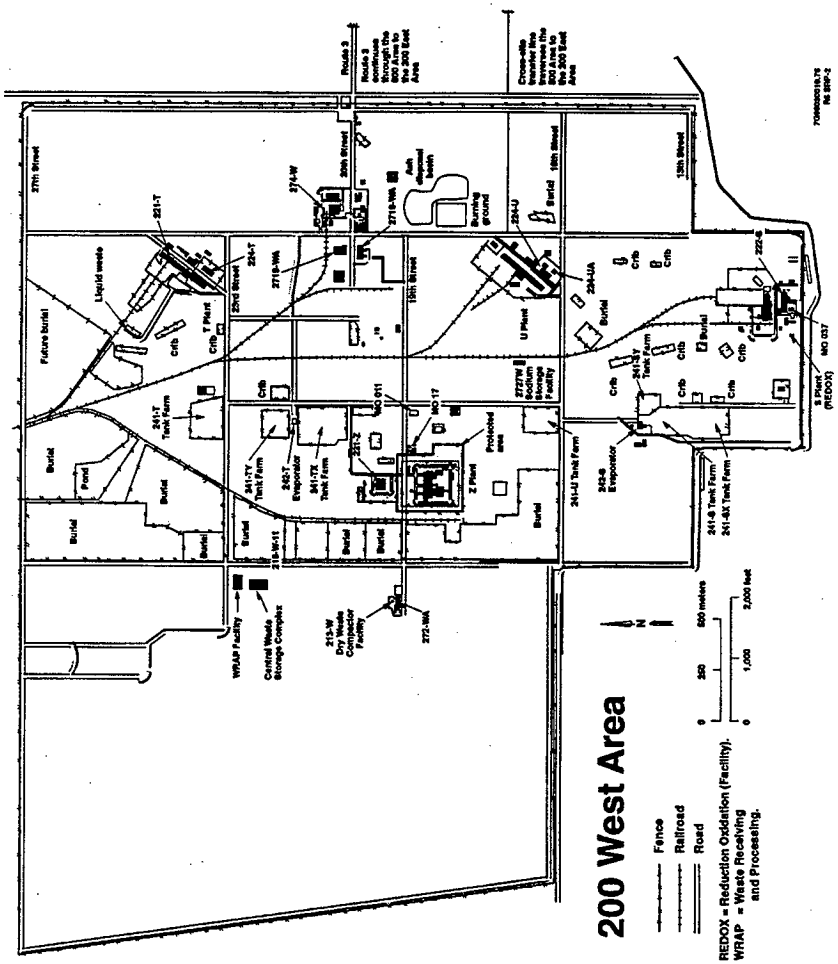

Figure B2-3. Tank Farm Facilities in the 200 East Area of the Hanford Site.

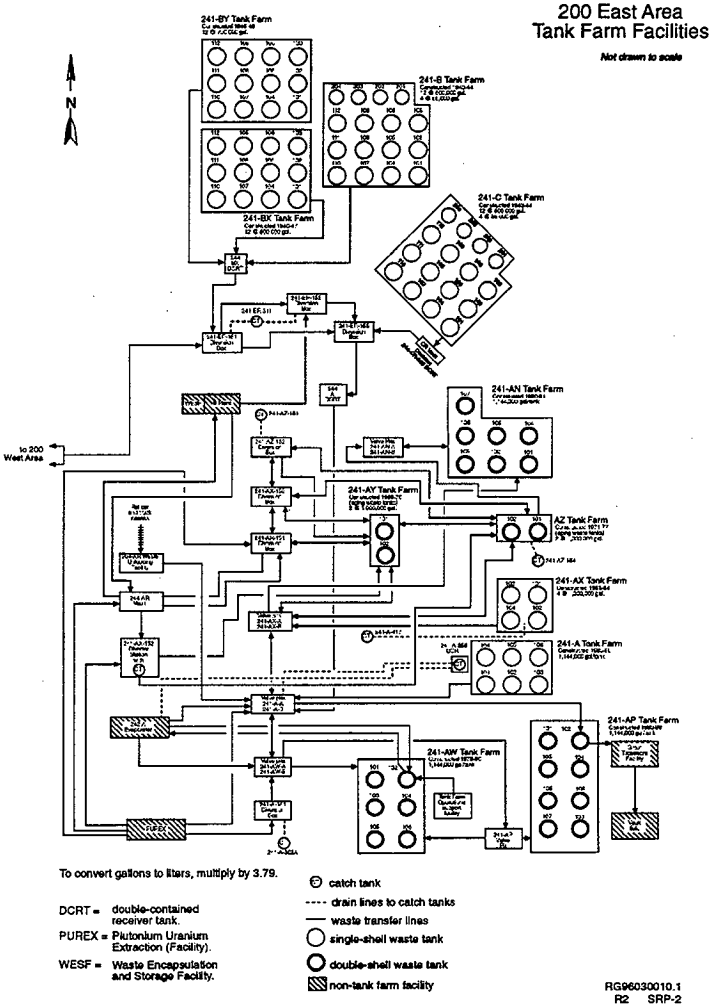

Figure B2-4. Tank Farm Facilities in the 200 West Area of the Hanford Site.

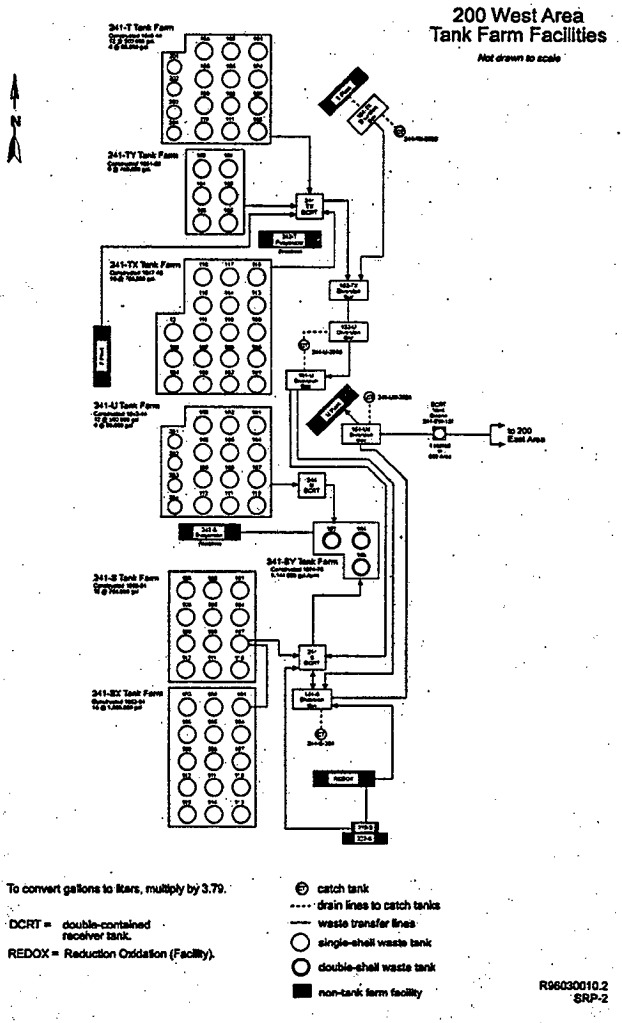

Figure B2-5. Liquid Waste Transfers to Tank Waste Remediation System Facilities.

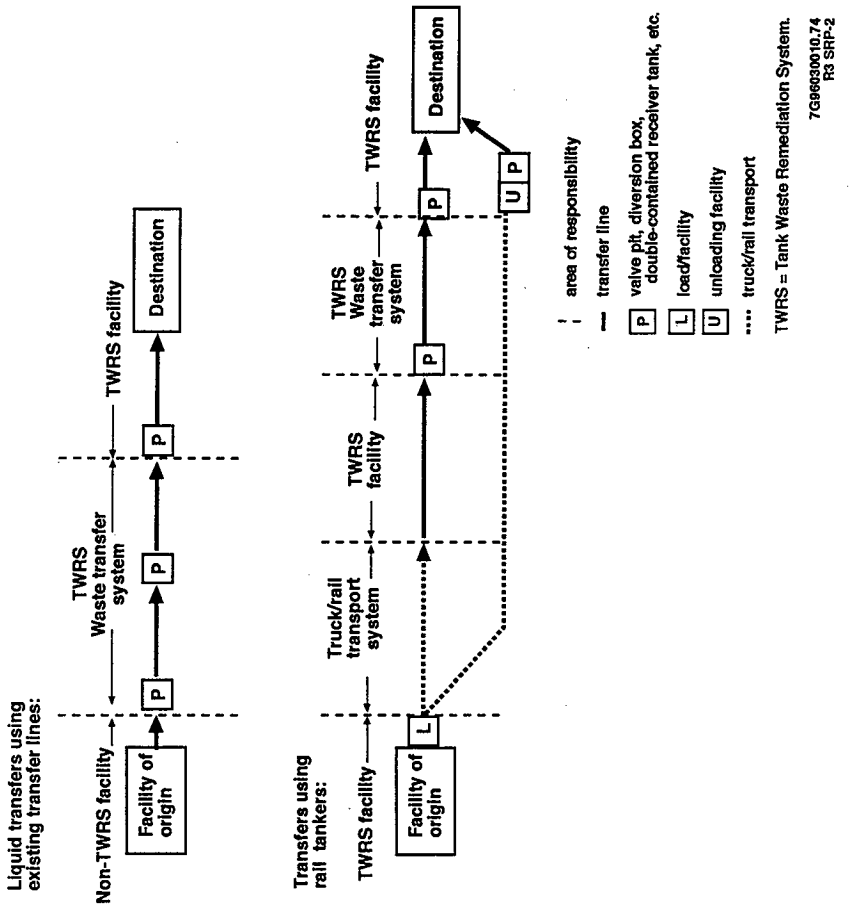

Figure B2-6. Liquid and Solid Waste Transfers from Tank Waste Remediation System Facilities.

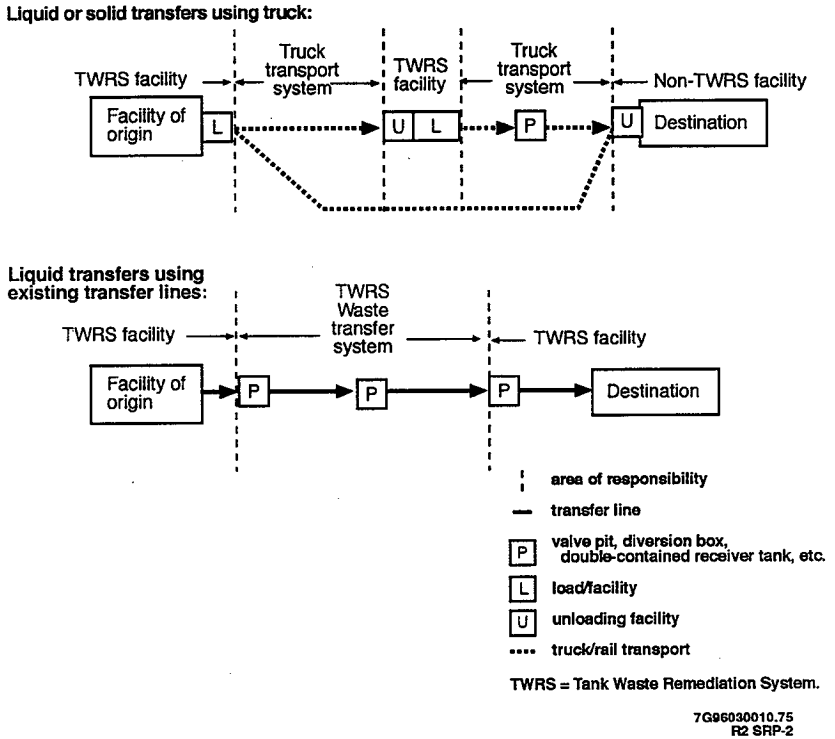

Figure B2-7. Graphic Representation of a Single-Shell Tank.

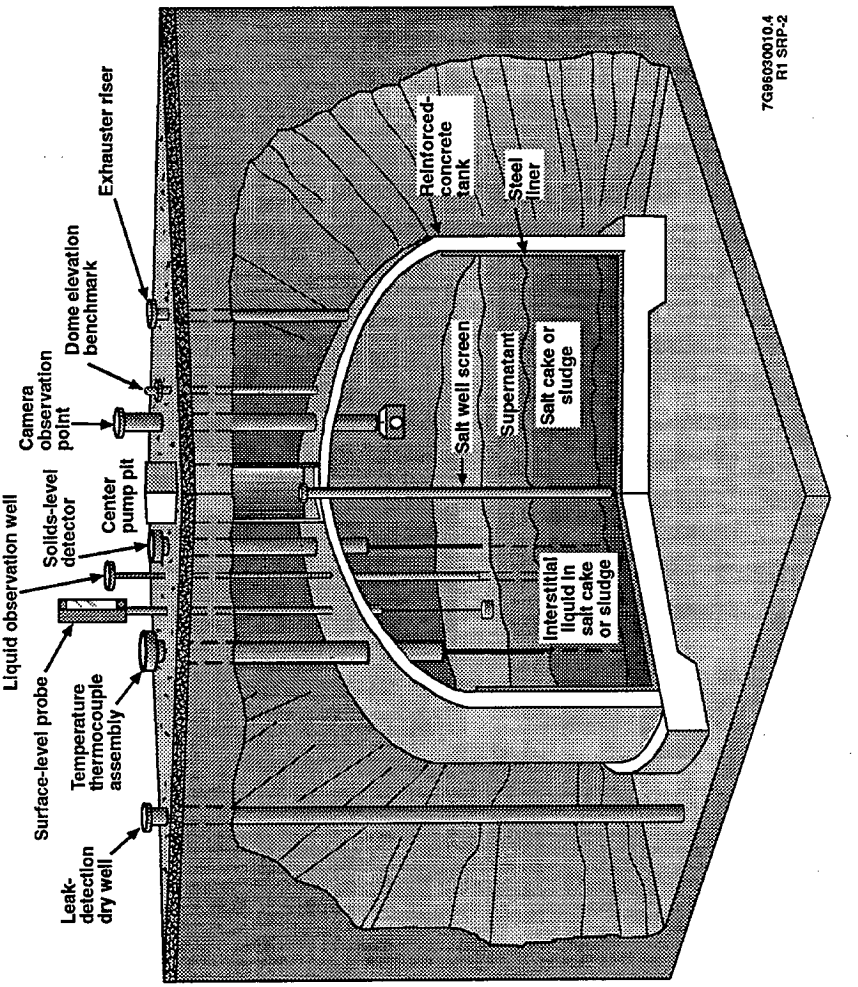

Figure B2-8. Typical Configurations of Single-Shell Tanks at the Hanford Site.

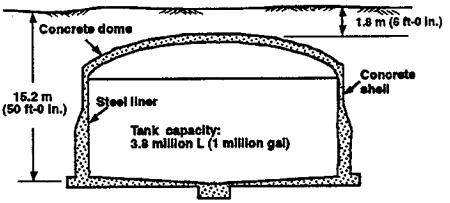

23-m (75-ft)-dia Single-Shell Tank Farms: 241-A*, 241-AX*, 241-SX

* A and AX have flat bottoms

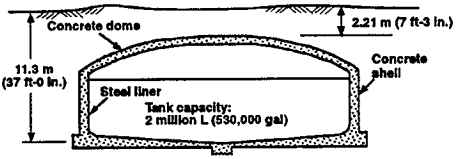

23-m (75-ft)-dia Single-Shell Tank Farms: 241-B, 241-BX, 241-C, 241-T, 241-U

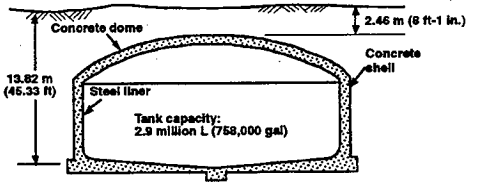

23-m (75-ft)-dia Single-Shell Tank Farms: 241-BY, 241-S, 241-TX, 241-TY

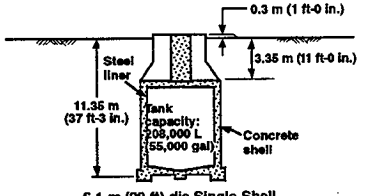

6.1-m (20-ft)-dia Single-Shell Tank Farms: 241-B, 241-C, 241-T, 241-U

7G960300010.3
R2 SRP-2

Figure B2-9. Passive Ventilation System for Single-Shell Tanks.

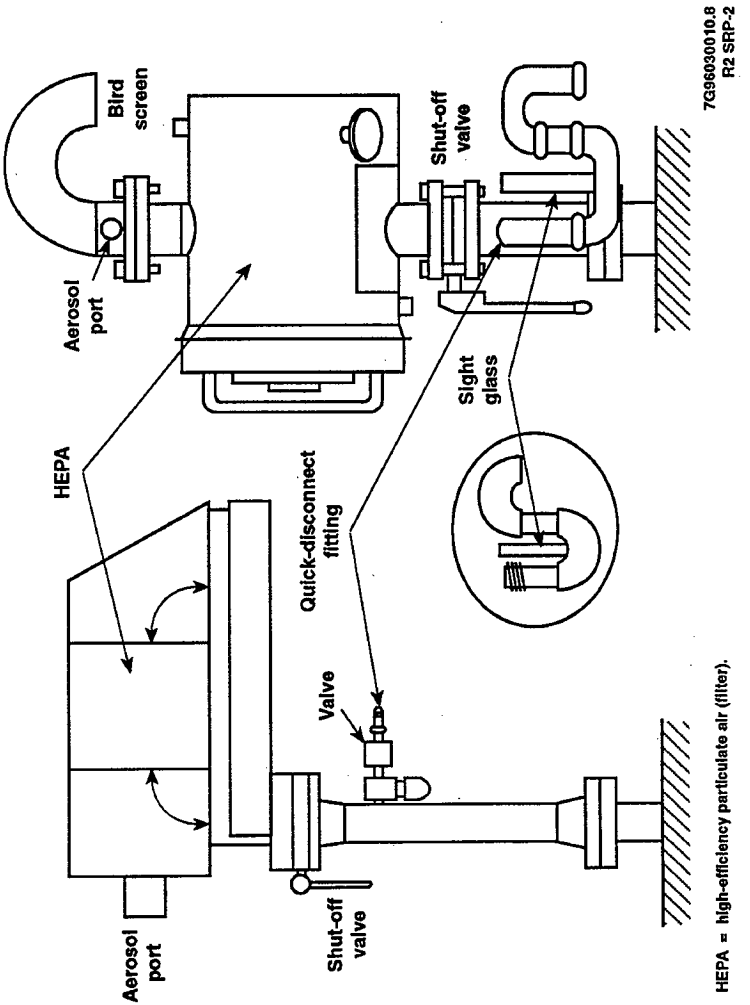

Figure B2-10. 241-C Tank Farm Active Ventilation System.

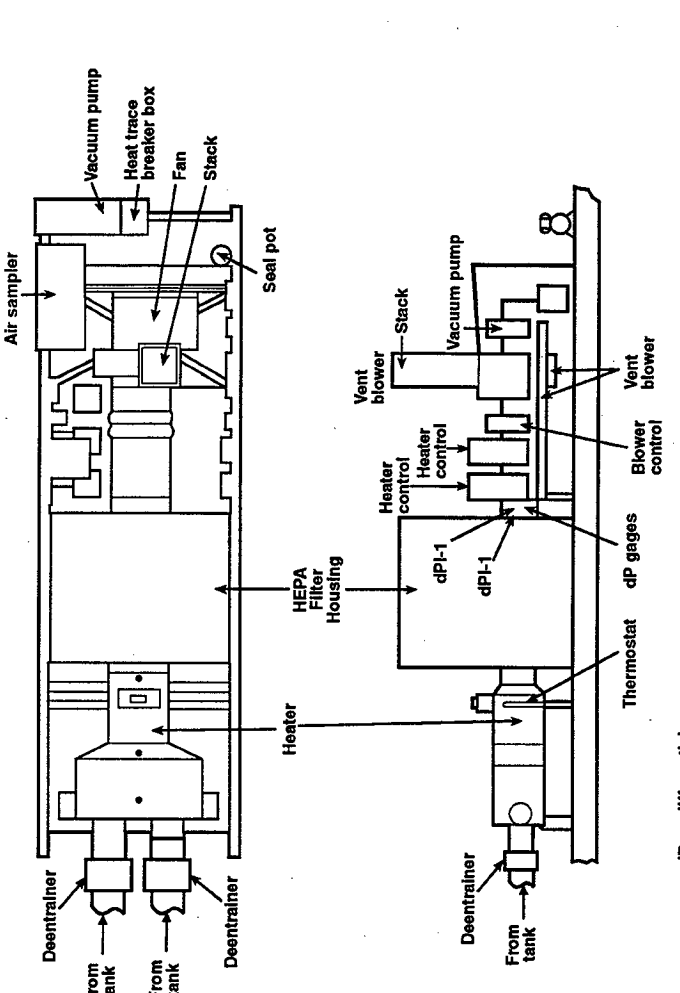

Figure B2-11. 241-SX Tank Farm Active Ventilation System.

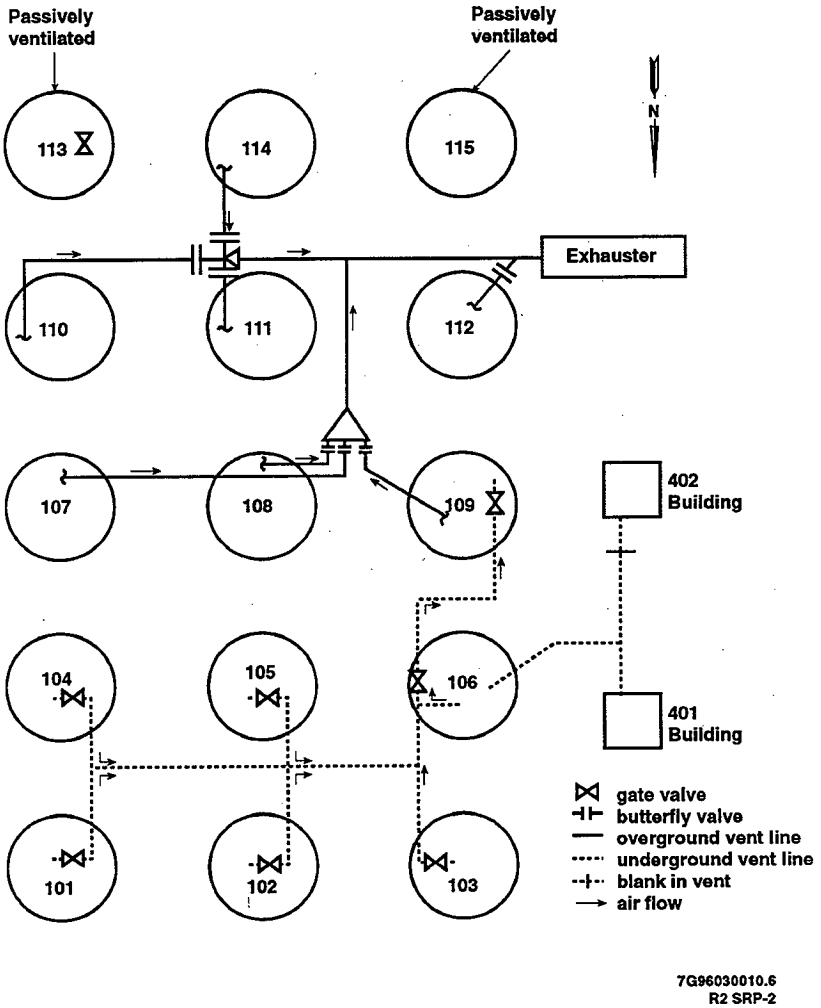

Figure B2-12. Graphic Representation of a Double-Shell Tank.

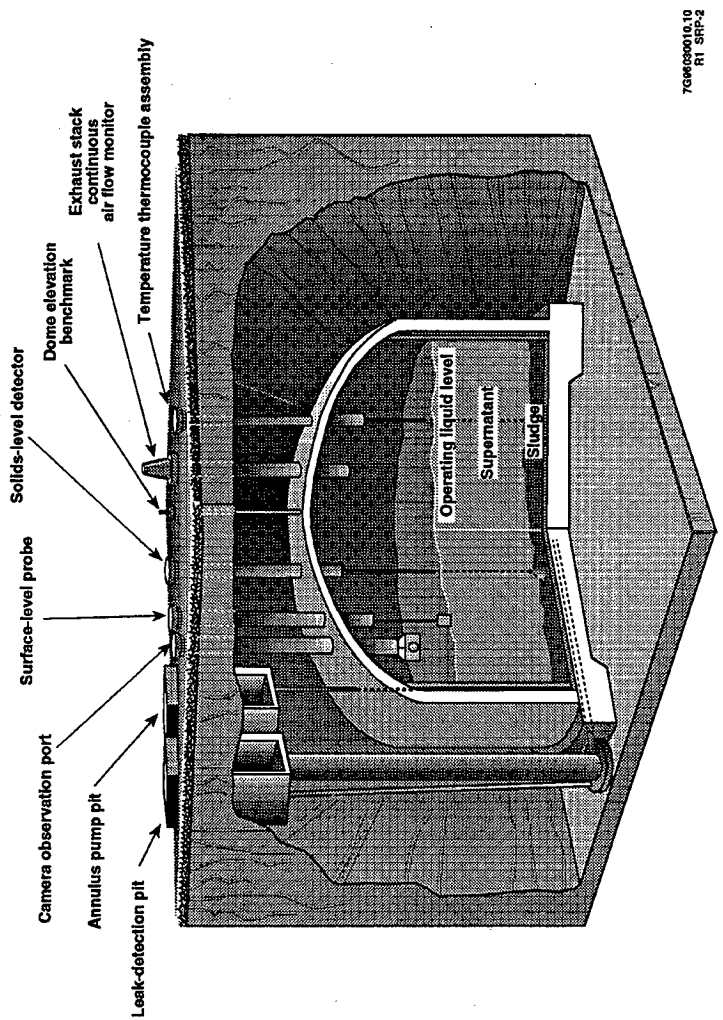

Figure B2-13. A Typical Double-Shell Tank Configuration.

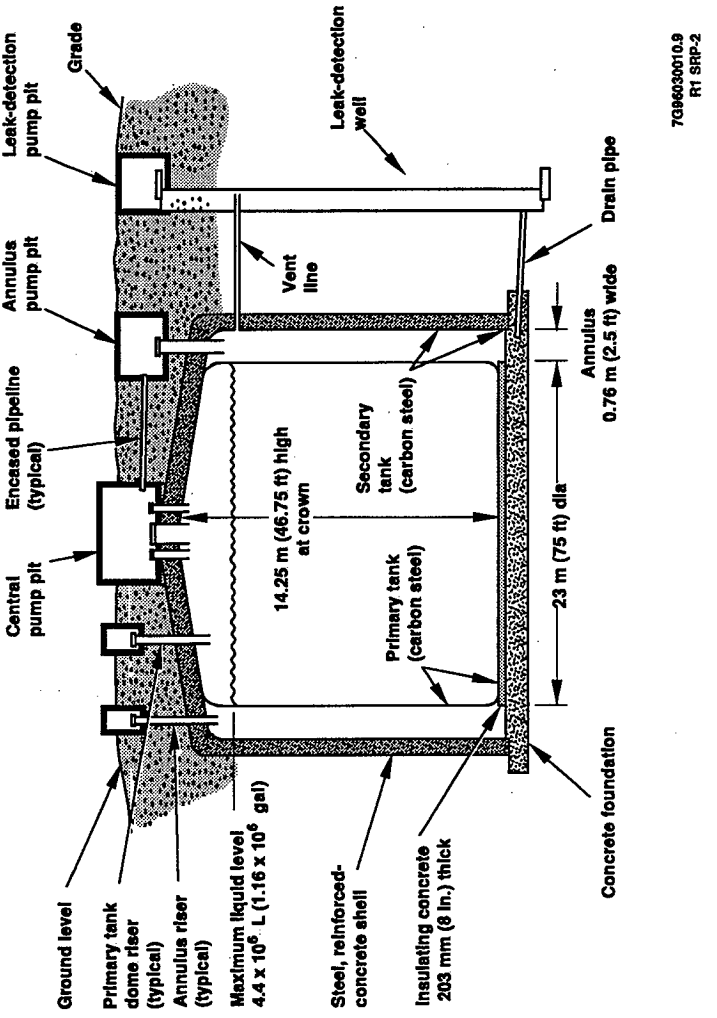

Figure B2-14. A Typical Central Pump or Distributor Pit.

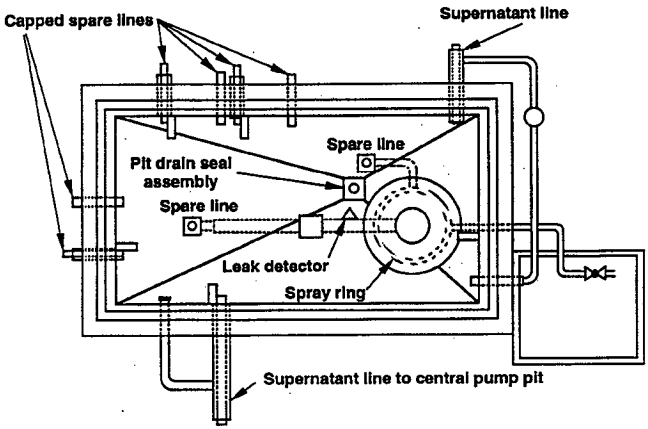

Plan View

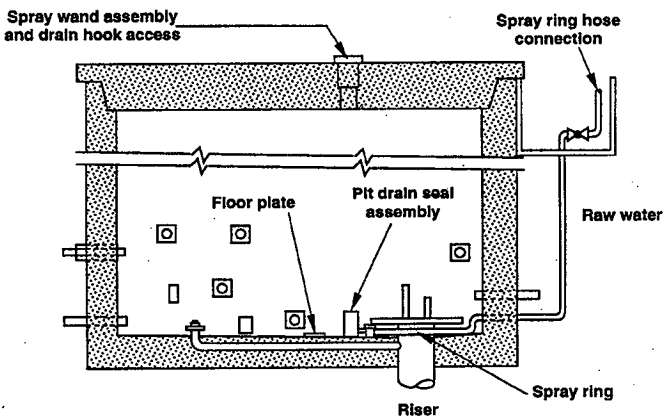

Section View

7G96030010.11
R2 SRP-2

Figure B2-15. A Typical Slurry Distributor.

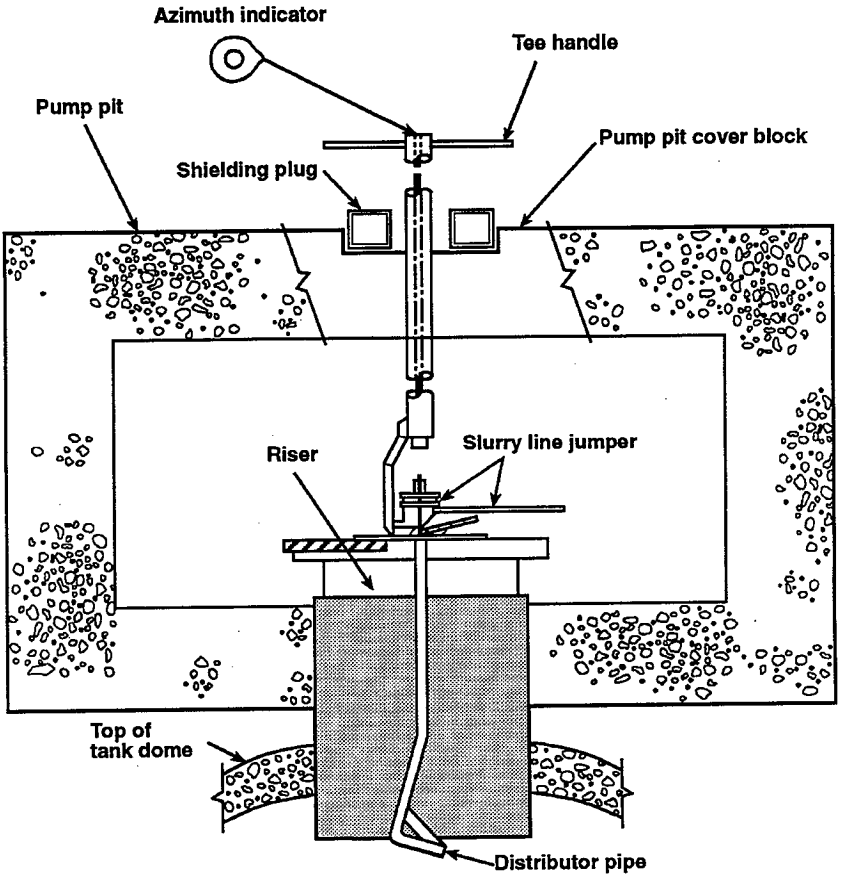

Figure B2-16. A Typical Annulus Pump Pit.

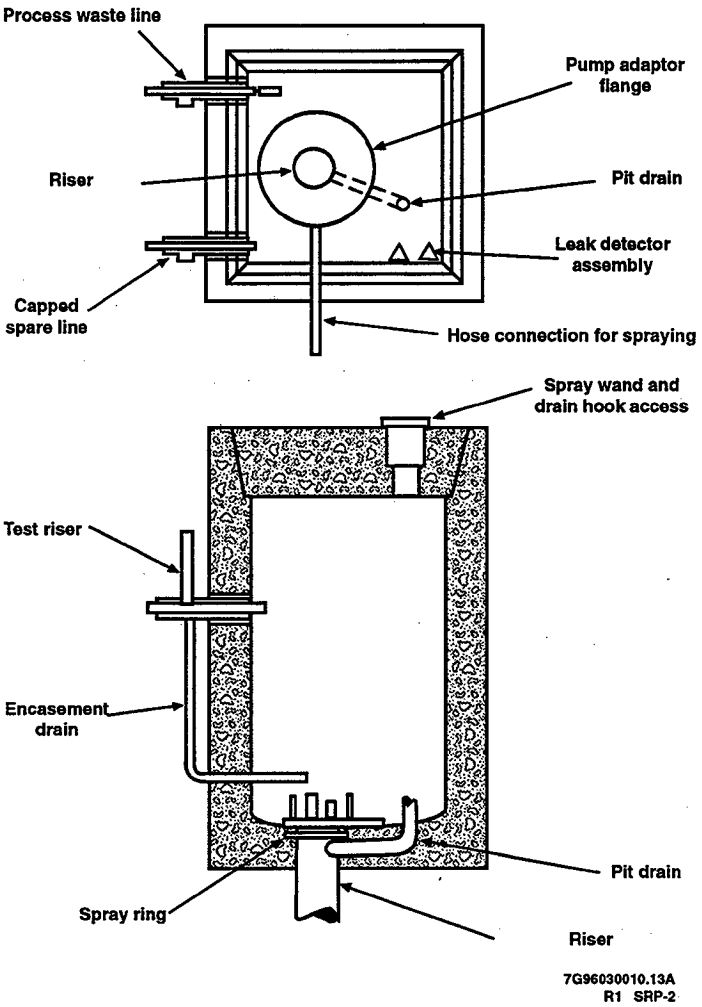

Figure B2-17. A Typical Feed Pump Pit.

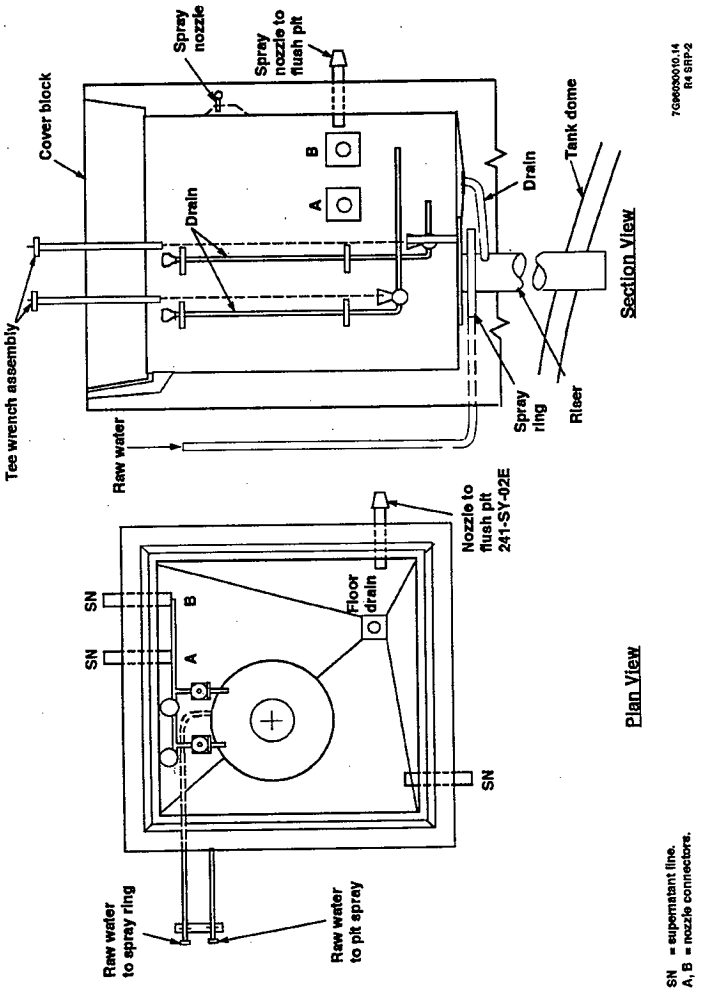

Figure B2-18. A Typical Leak Detection Pit.

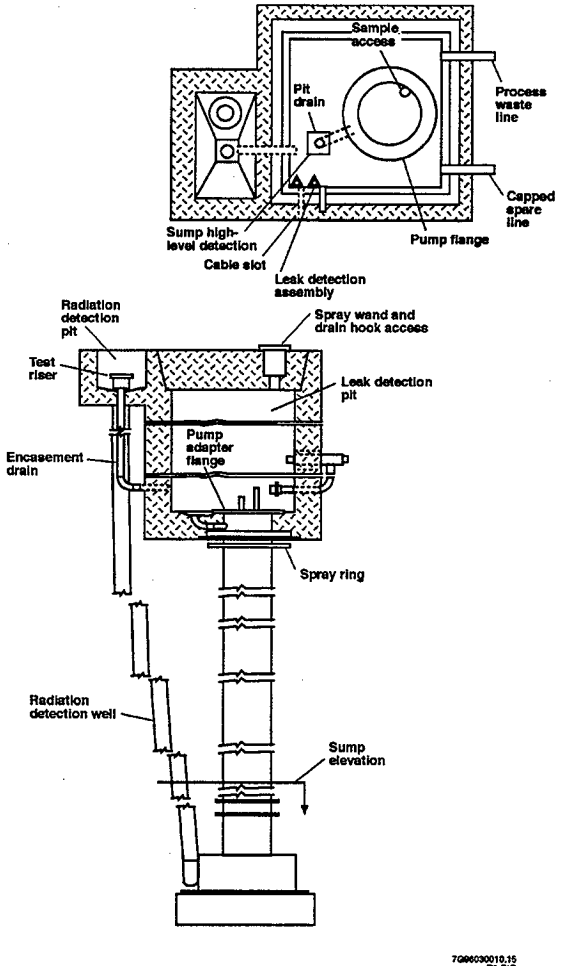

Figure B2-19. A Typical Drain Pit.

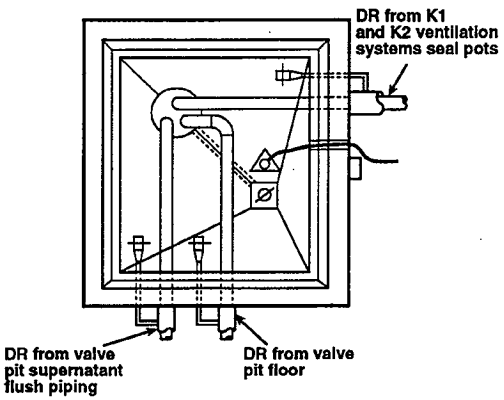

Figure B2-20. 241-A-702 Primary Ventilation System (Now Isolated) for 241-AY and 241-AZ Tank Farms (Aging Waste Facility).

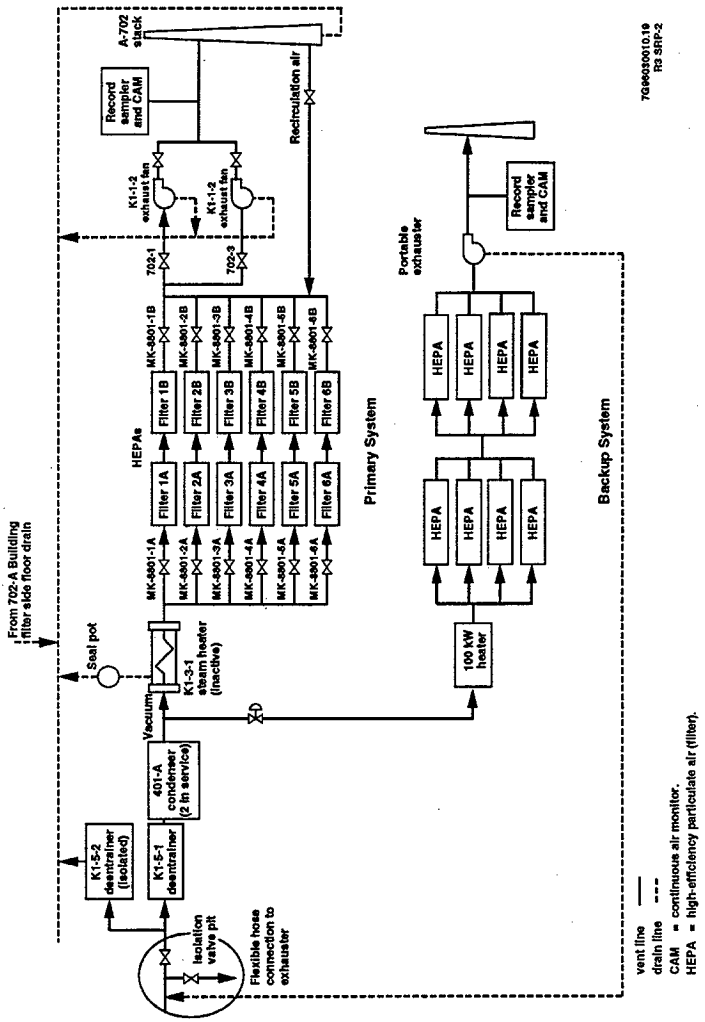

Figure B2-21. Typical Annulus Ventilation System for 241-AZ Tank Farms (Aging Waste Facility).

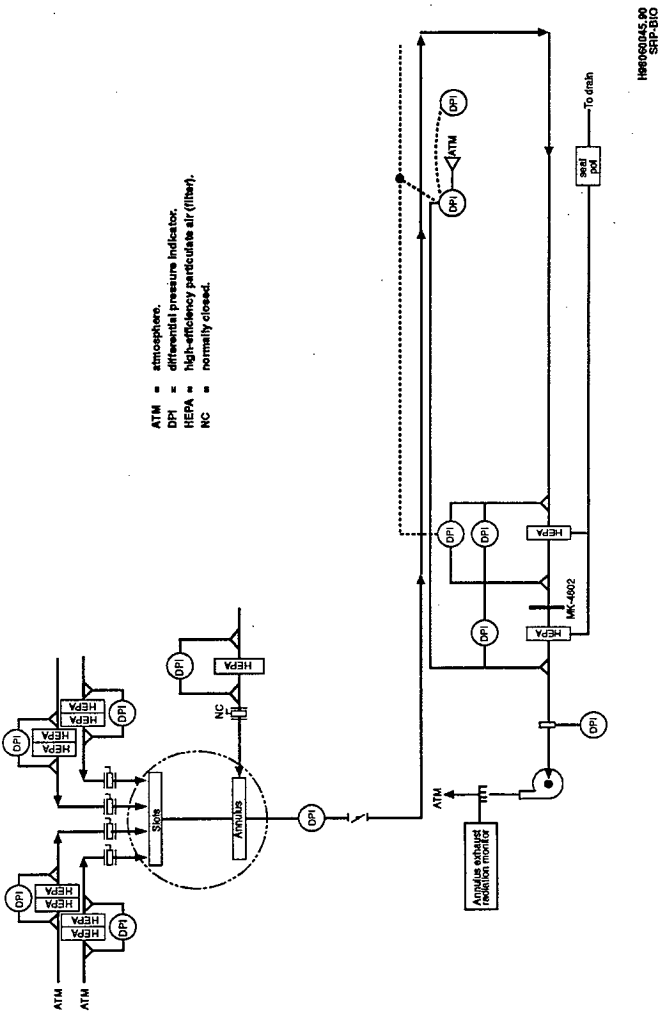

Figure B2-22. Primary Ventilation System for 241-AN, 241-AP, and 241-AW Tank Farms.

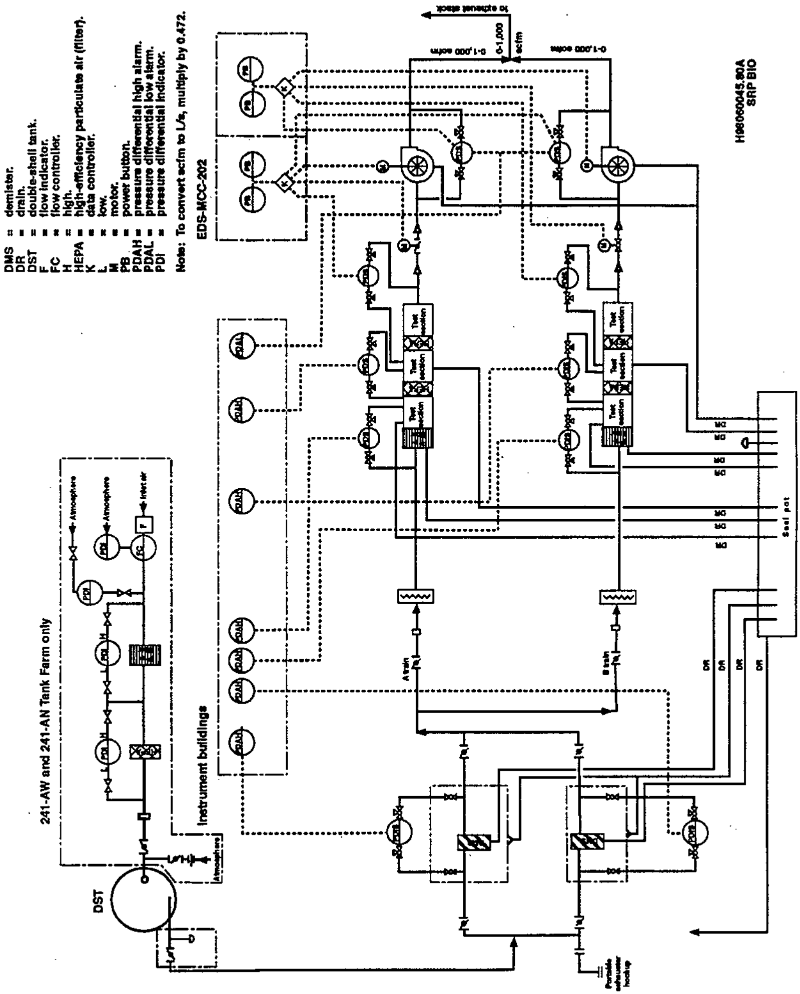

Figure B2-23. Annulus Ventilation System for 241-AN, 241-AP, and 241-AW Tank Farms.

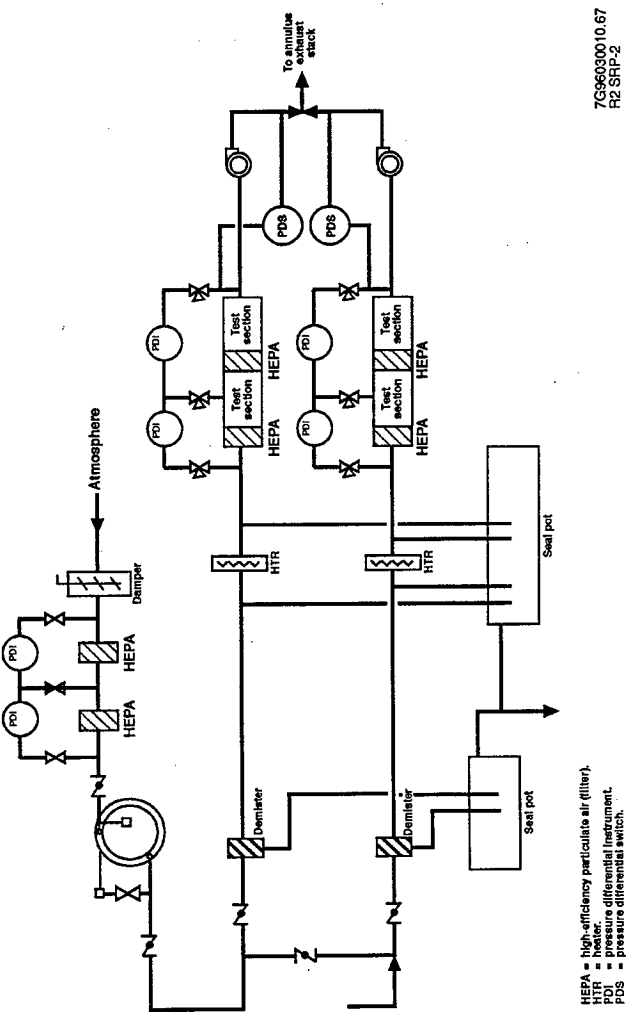

Figure B2-24. A Typical 241-AY or 241-AZ Tank (Aging Waste Facility) with Air Lift Circulators and Steam Coils.

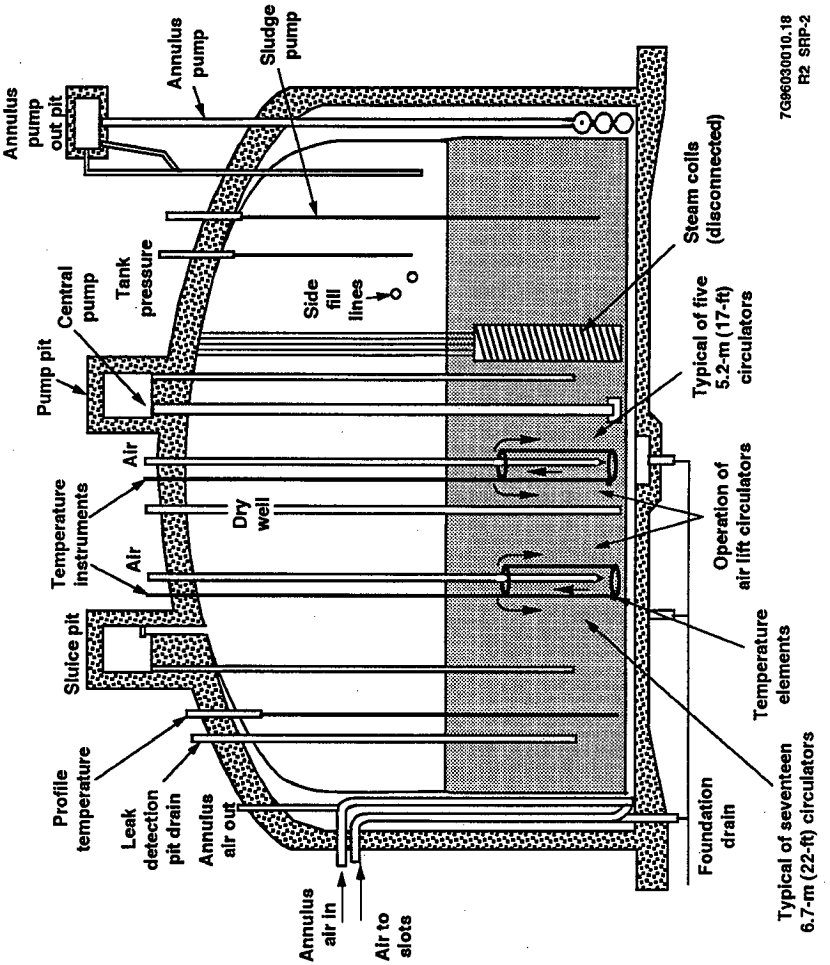

Figure B2-25. Typical Design for Steel Catch Tank Contained in a Vault or Pit.

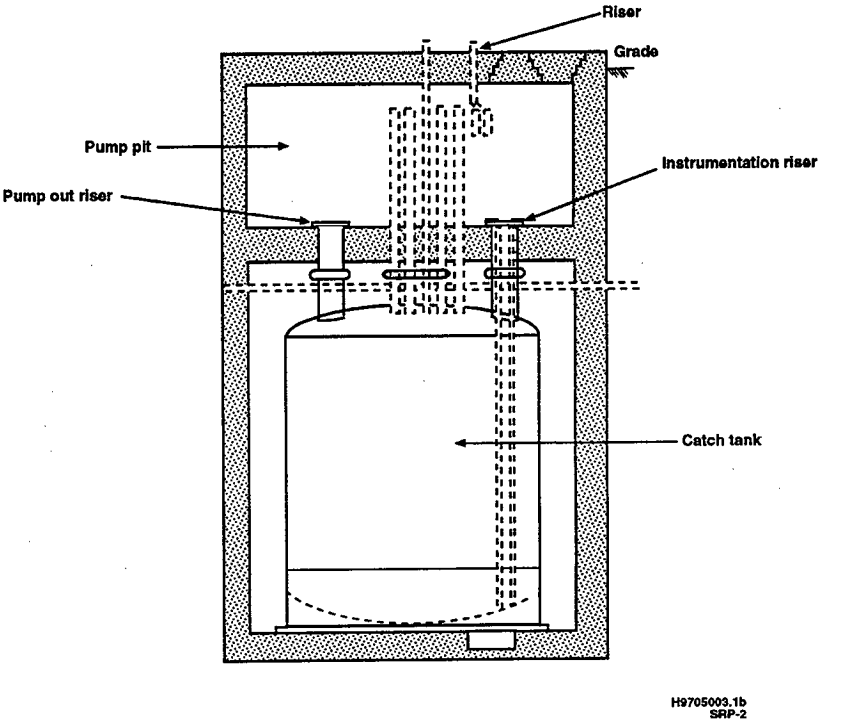

Figure B2-26. Typical Design for Direct Buried Concrete or Steel Catch Tanks.

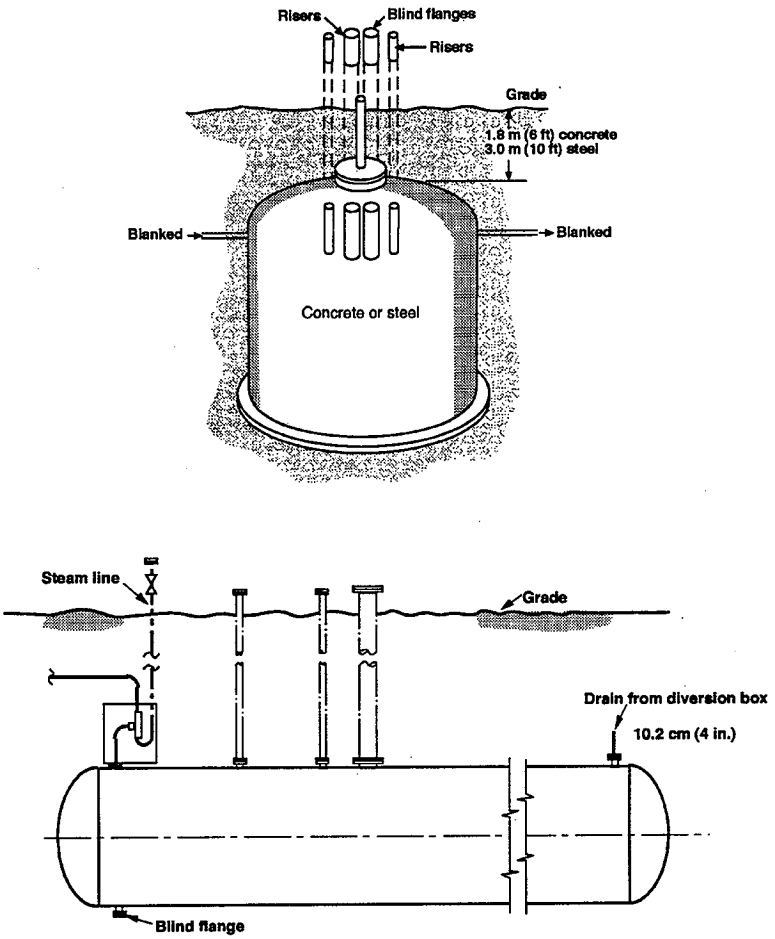

Figure B2-27. A Double-Contained Receiver Tank in Place.

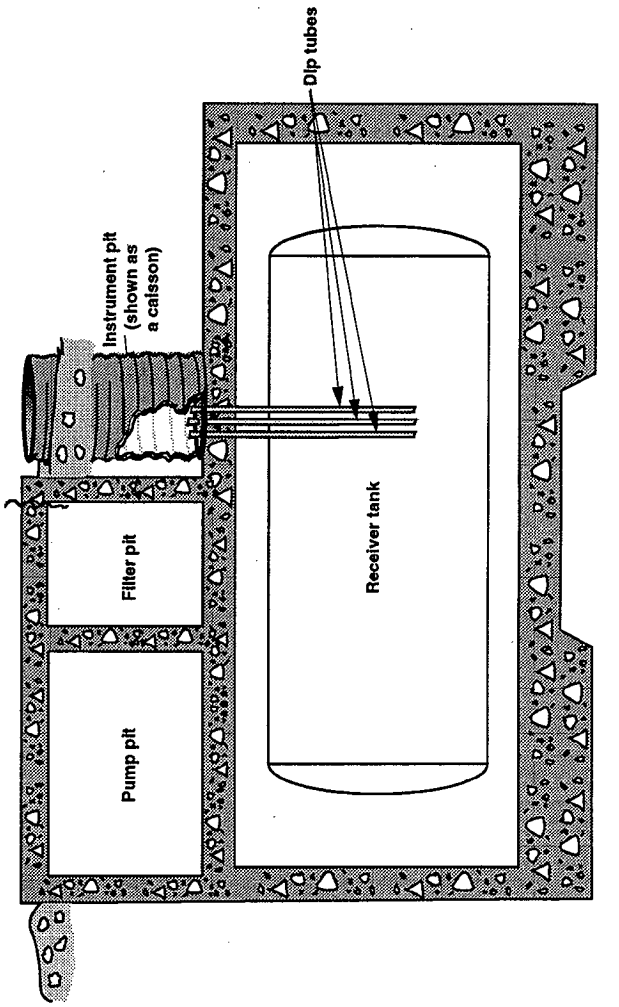

Figure B2-28. A Typical Design of Double-Contained Receiver Tank.

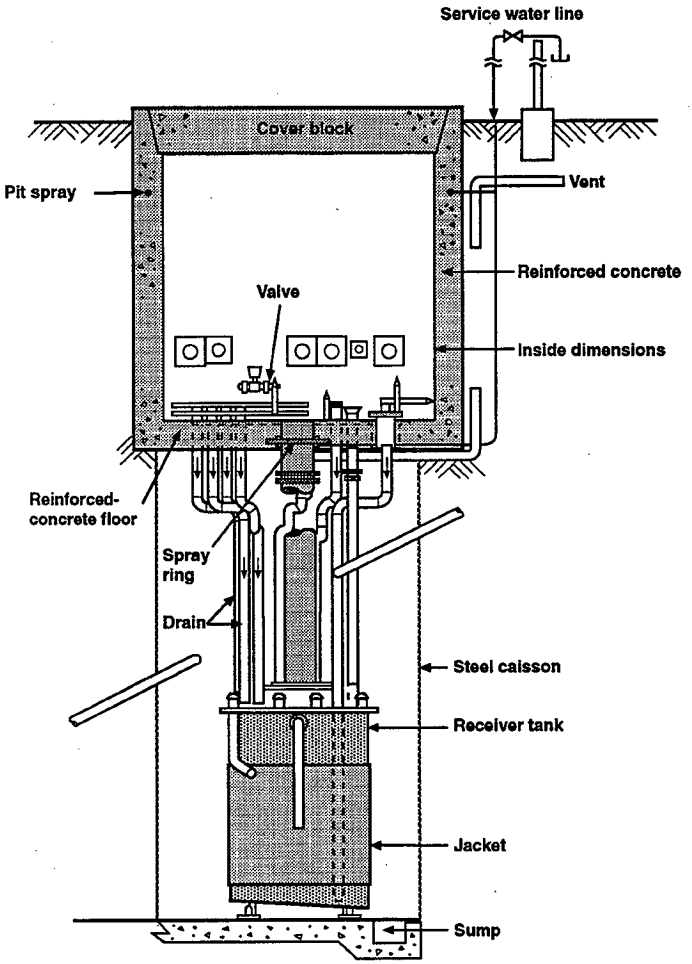

Figure B2-29. Location of the 200 East Area Radioactively Contaminated Miscellaneous Underground Storage Tanks.

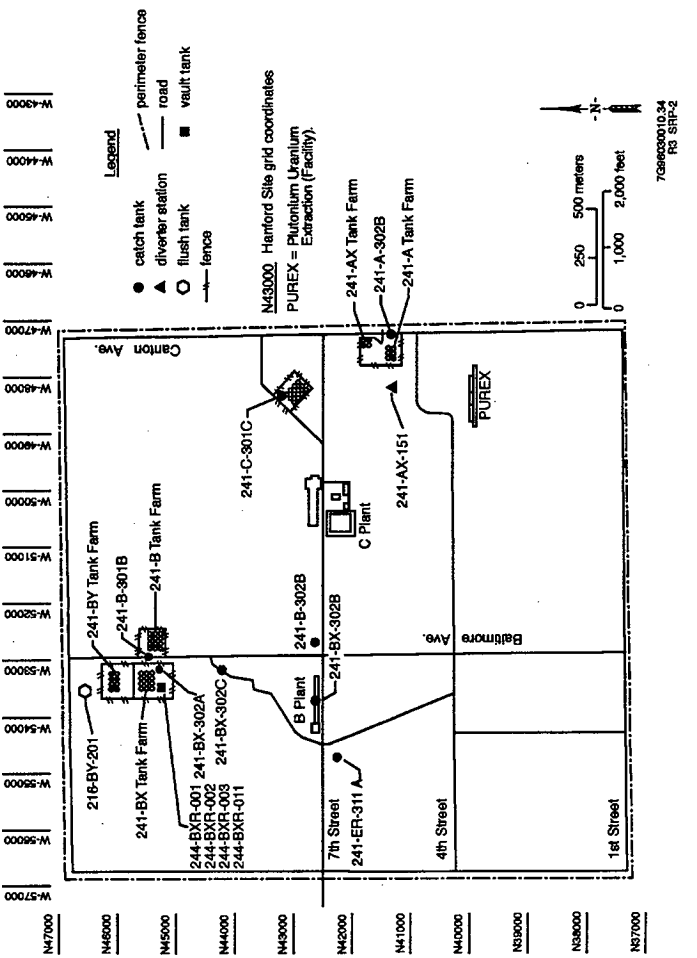

Figure B2-30. Location of the 200 West Area Radioactively Contaminated Miscellaneous Underground Storage Tanks.

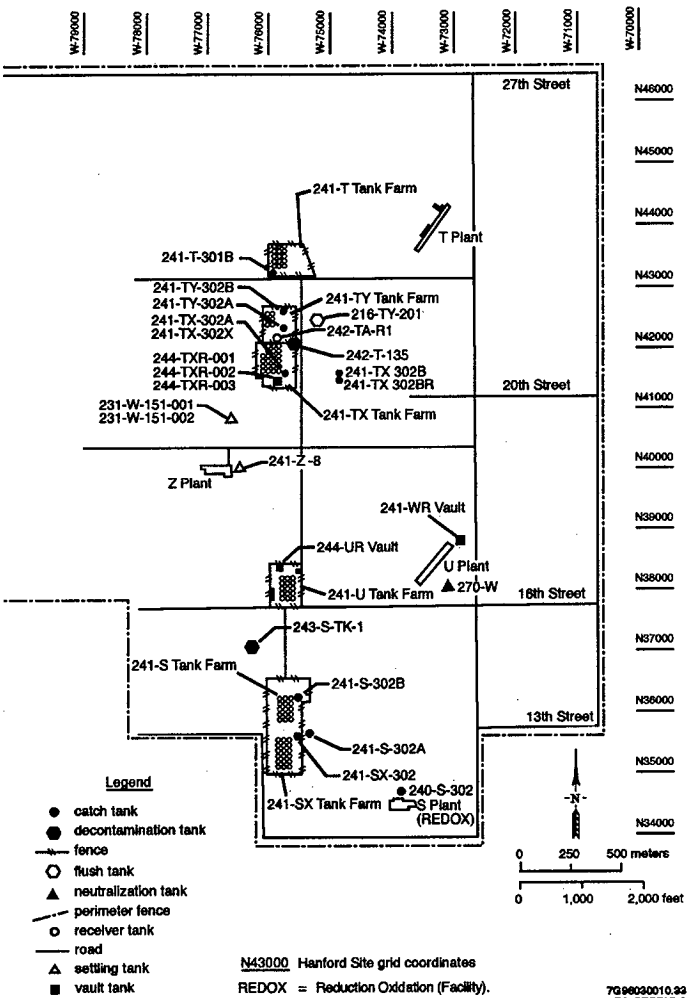

Figure B2-31. The 204-AR Waste Unloading Facility.

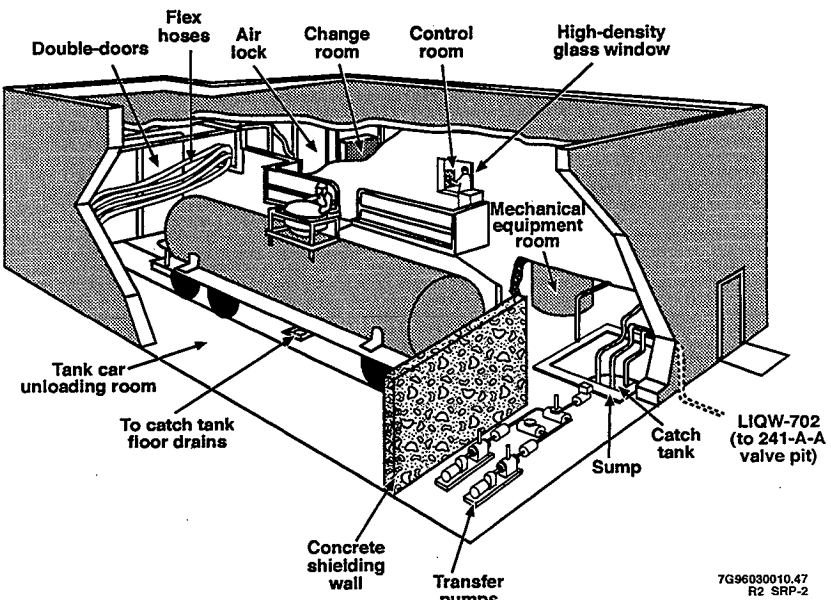

LIQW = liquid waste.

Figure B2-32. First and Second Floor of the 204-AR Waste Unloading Facility.

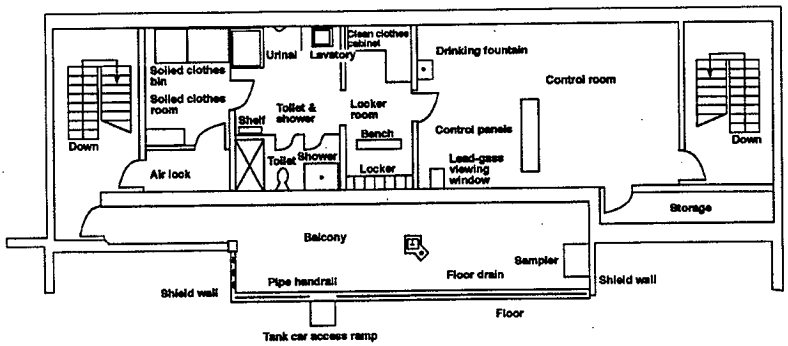

Second Floor

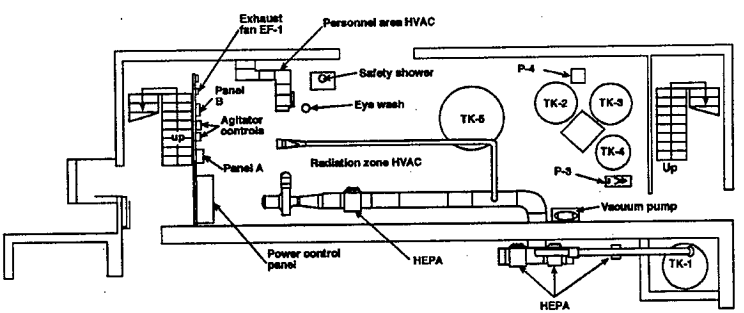

First Floor

HEPA = high-efficiency particulate air.
HVAC = heating, ventilation, and air conditioning.
P = panel.
TK = tank.

7G98030010.48
R4 SRP-2

Figure B2-33. Canyon and Process Area Equipment Arrangement of the 244-AR Vault.

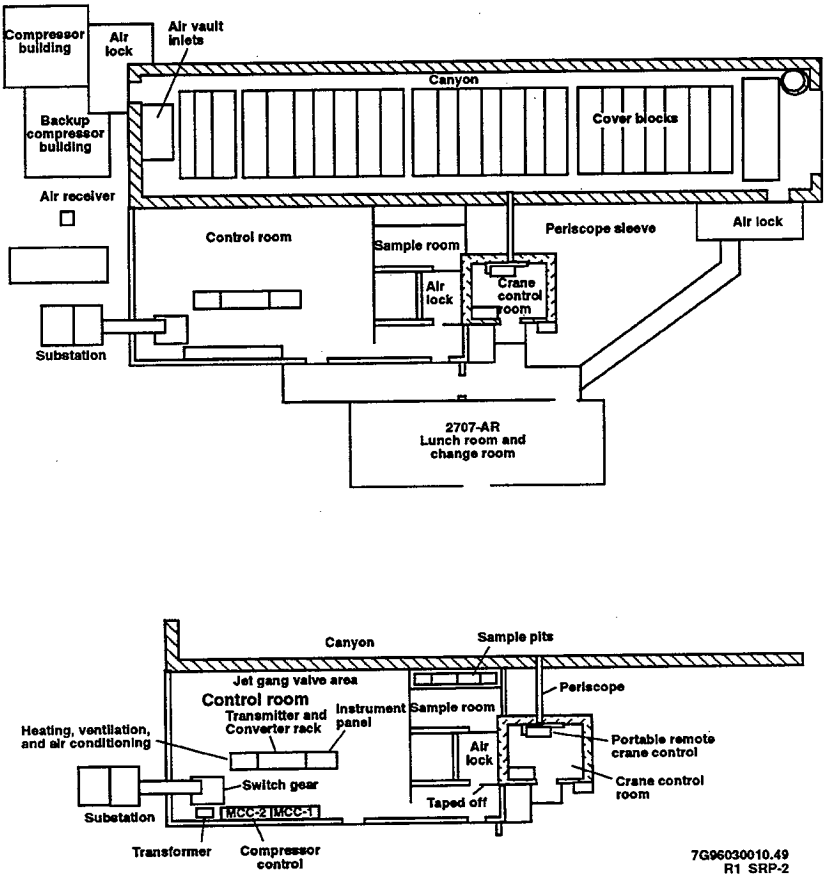

Figure B2-34. Process Area Cross-Section of the 244-AR Vault.

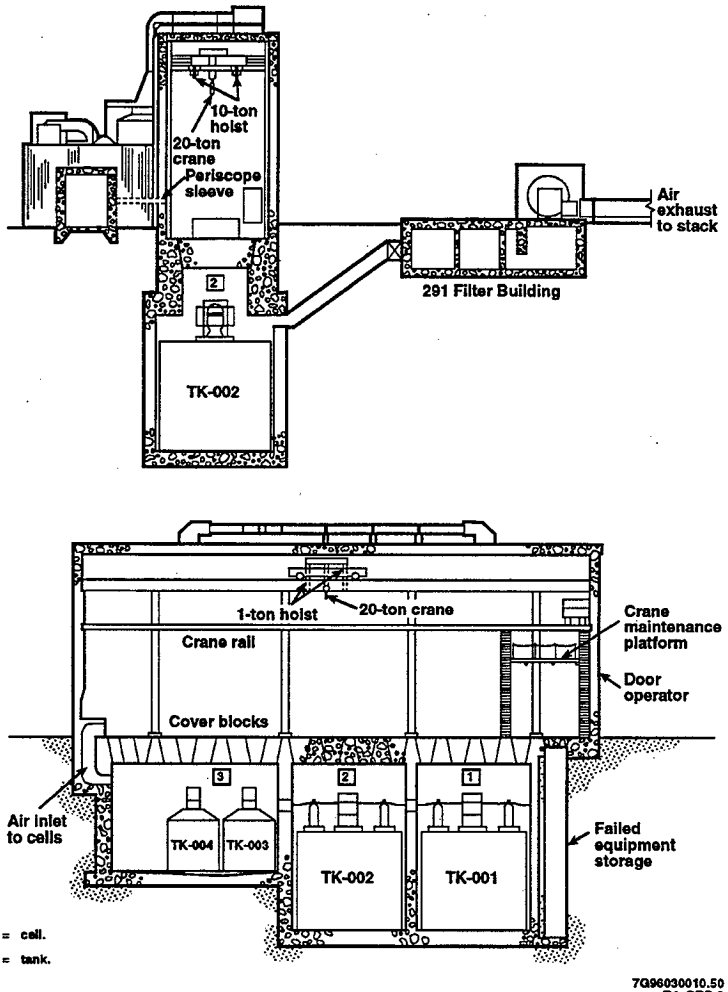

Figure B2-35. 200 East and 200 West Area Cribs, Ditches, and Ponds.

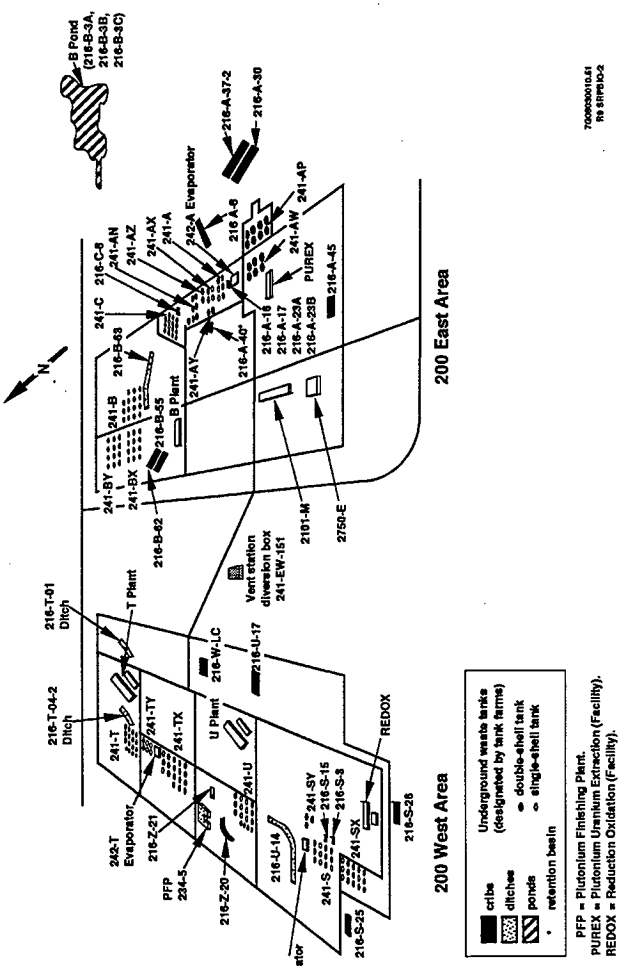

Figure B2-36. A Typical Crib Structure.

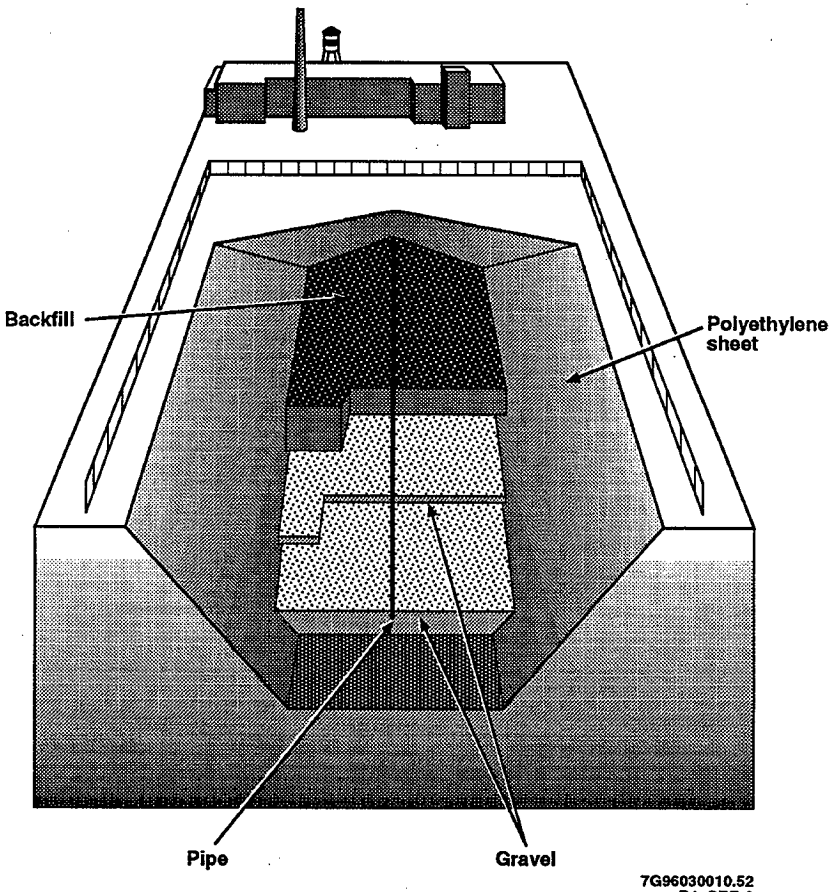

Figure B2-37. Typical Transfer Pipe Encasement Configurations.

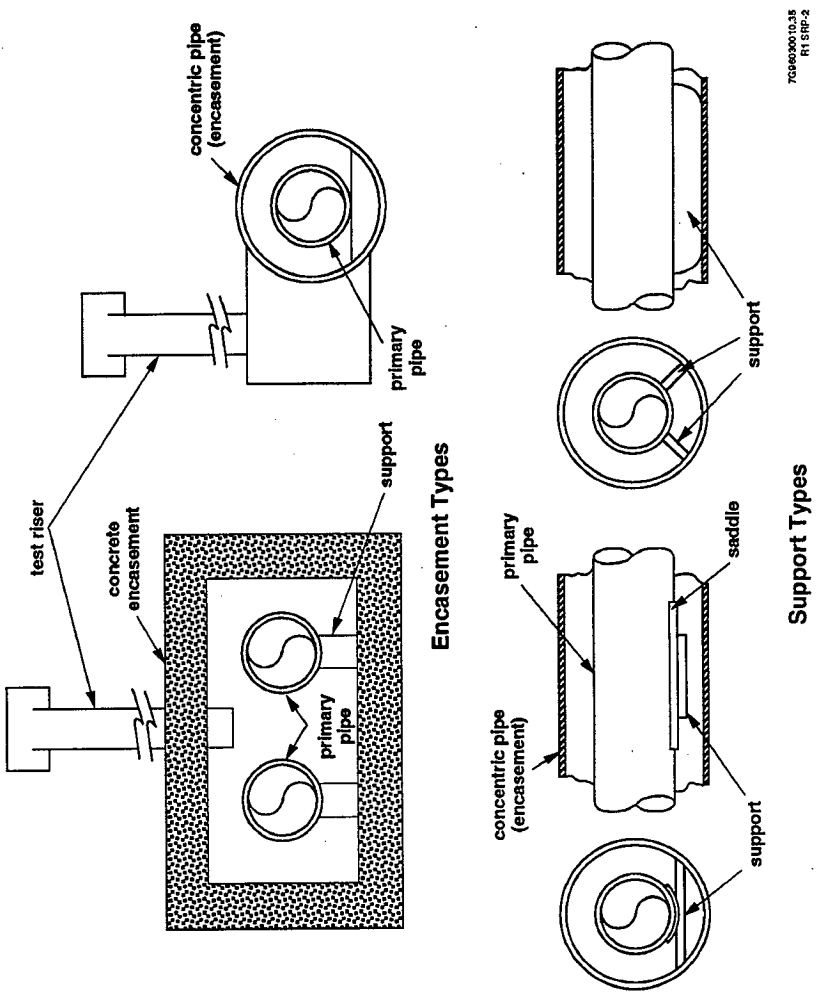

Figure B2-38. Cleanout Box Equipment and Design.

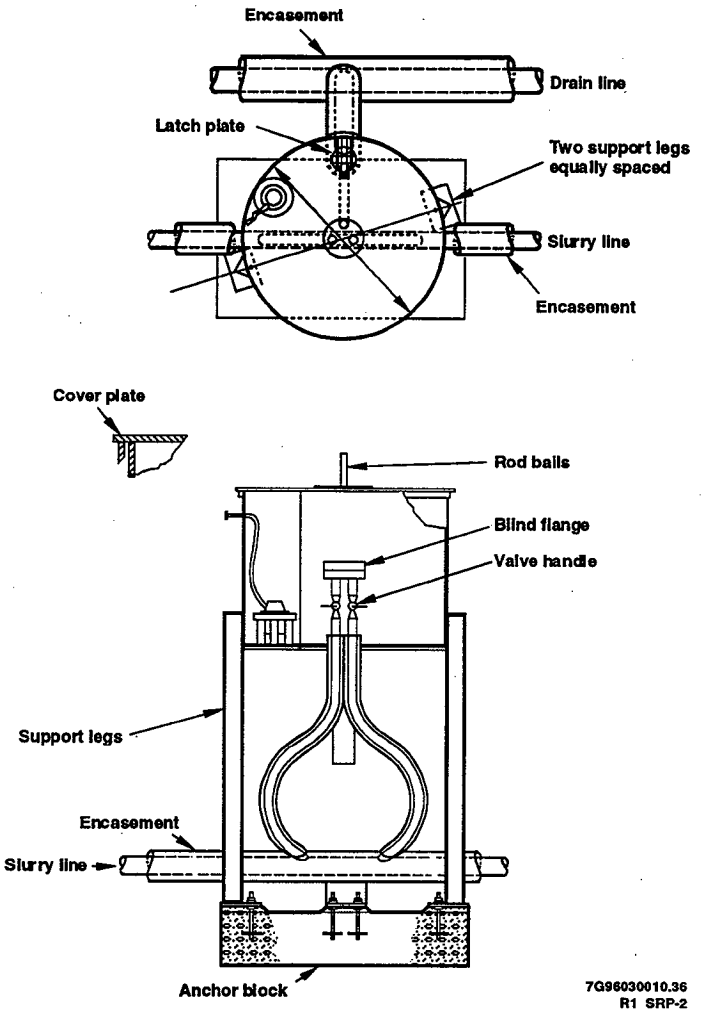

Figure B2-39. A Typical Cleanout Box.

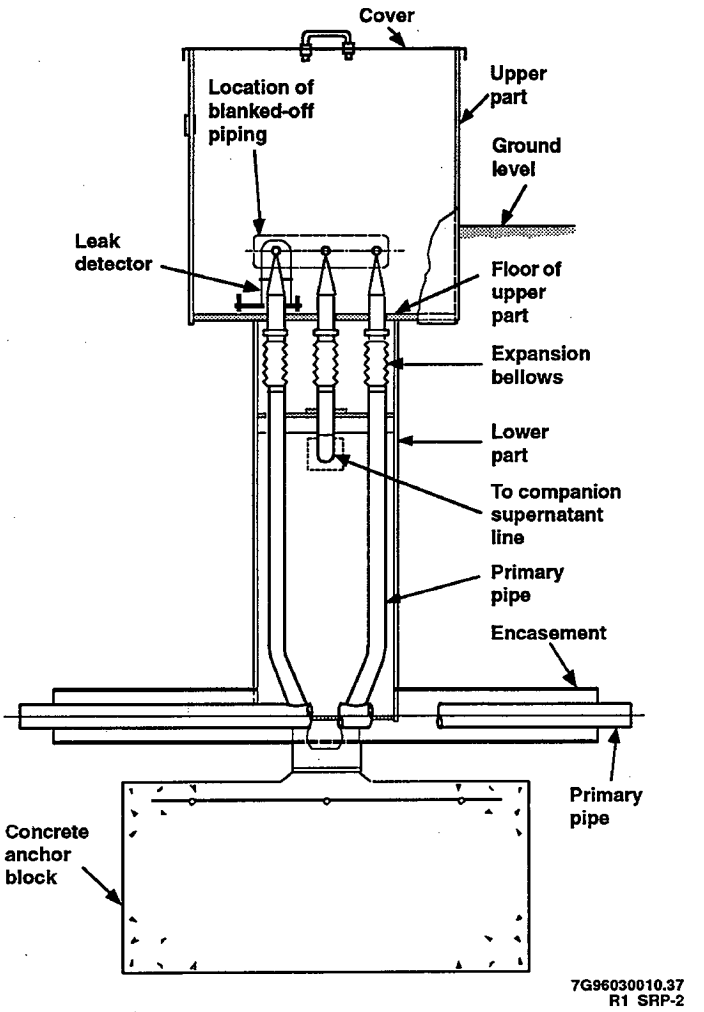

Figure B2-40. Typical Rigid and Flexible Jumpers.

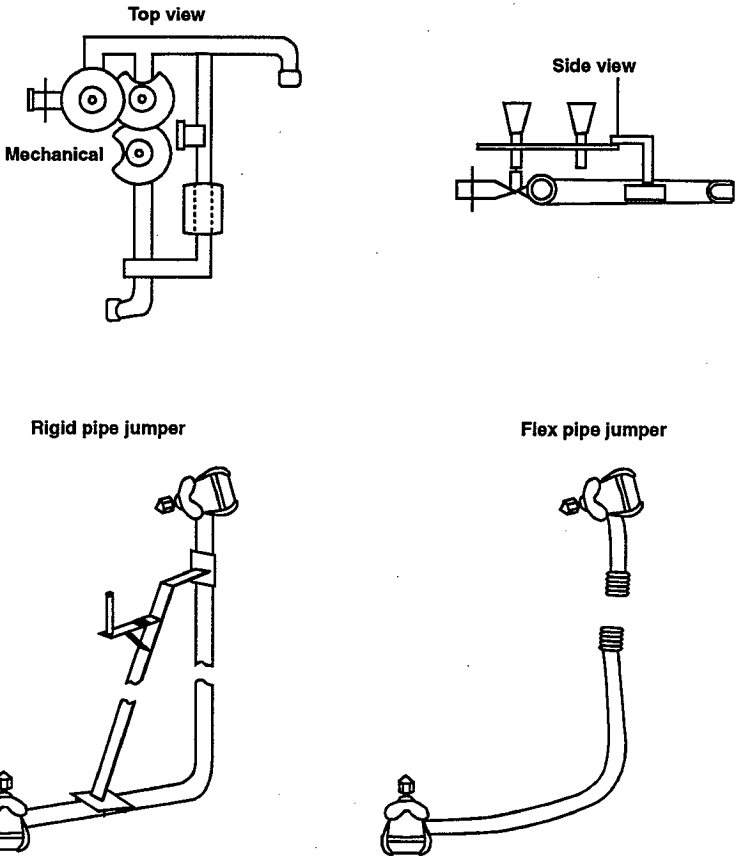

Figure B2-41. Hanford Site and Plutonium Uranium Extraction (PUREX) Head Connectors.

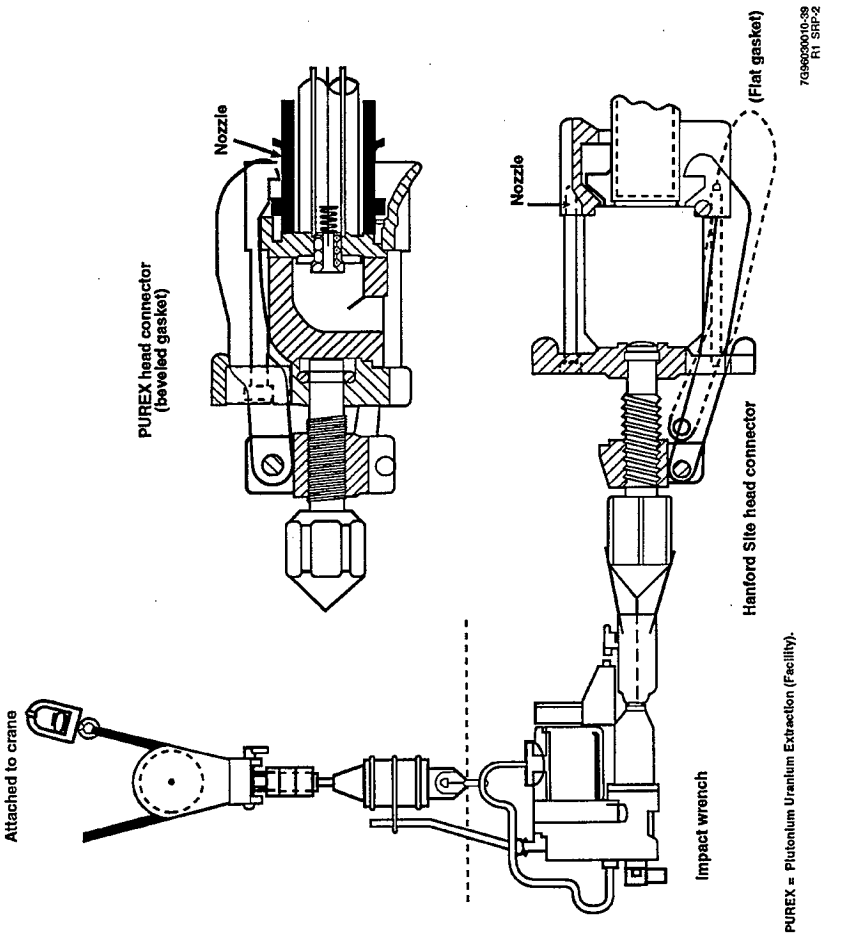

Figure B2-42. A Typical Valve Pit.

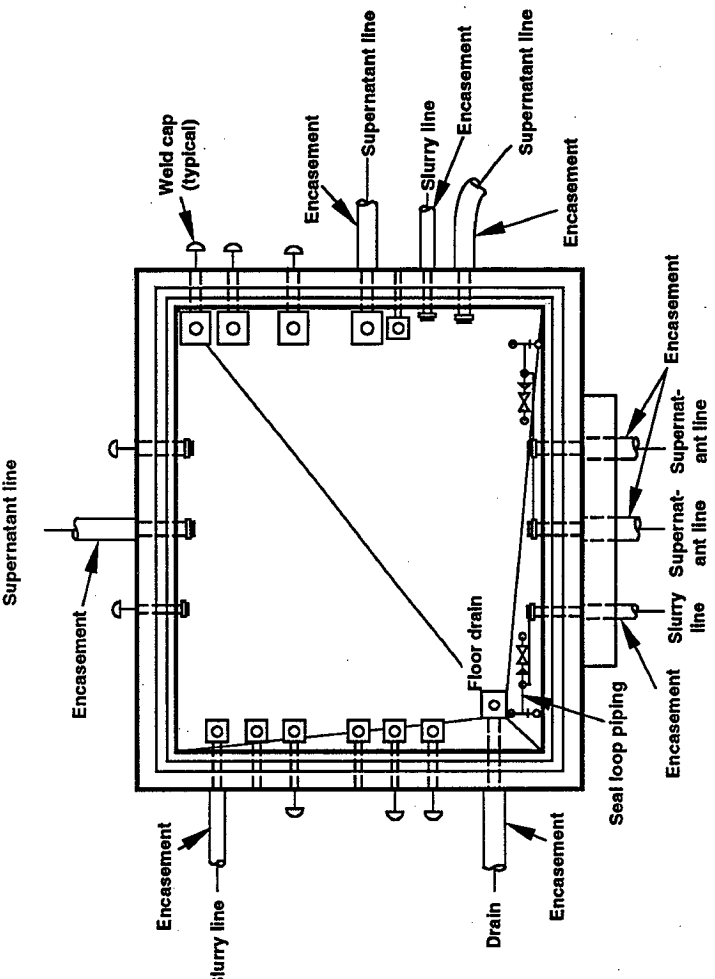

Figure B2-43. A Typical Diversion Box.

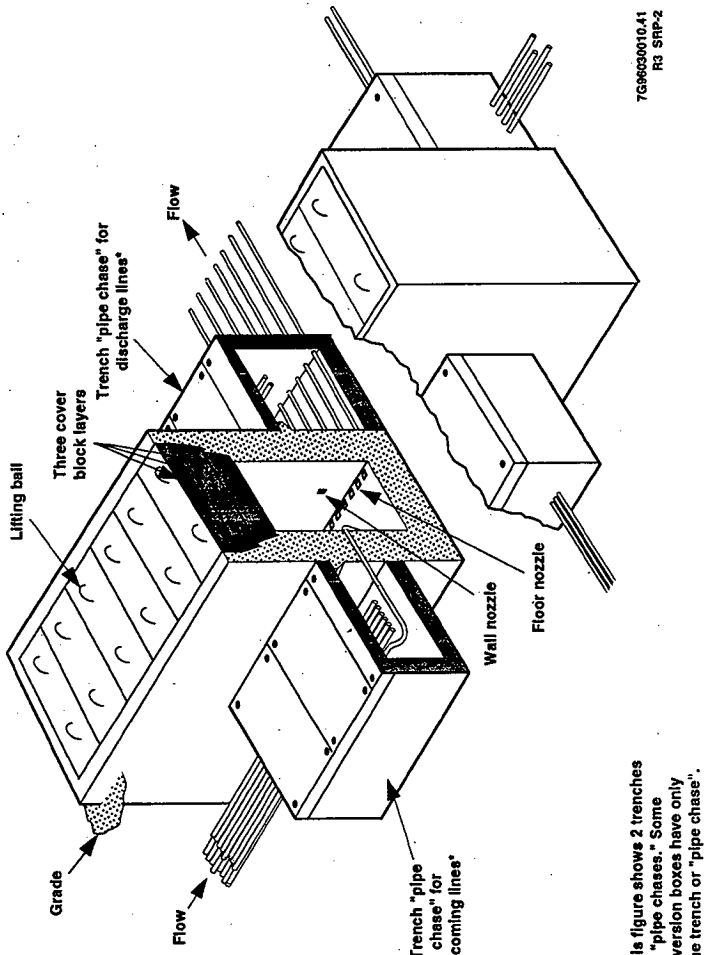

Figure B2-44. Typical Diversion Box Operating Connections.

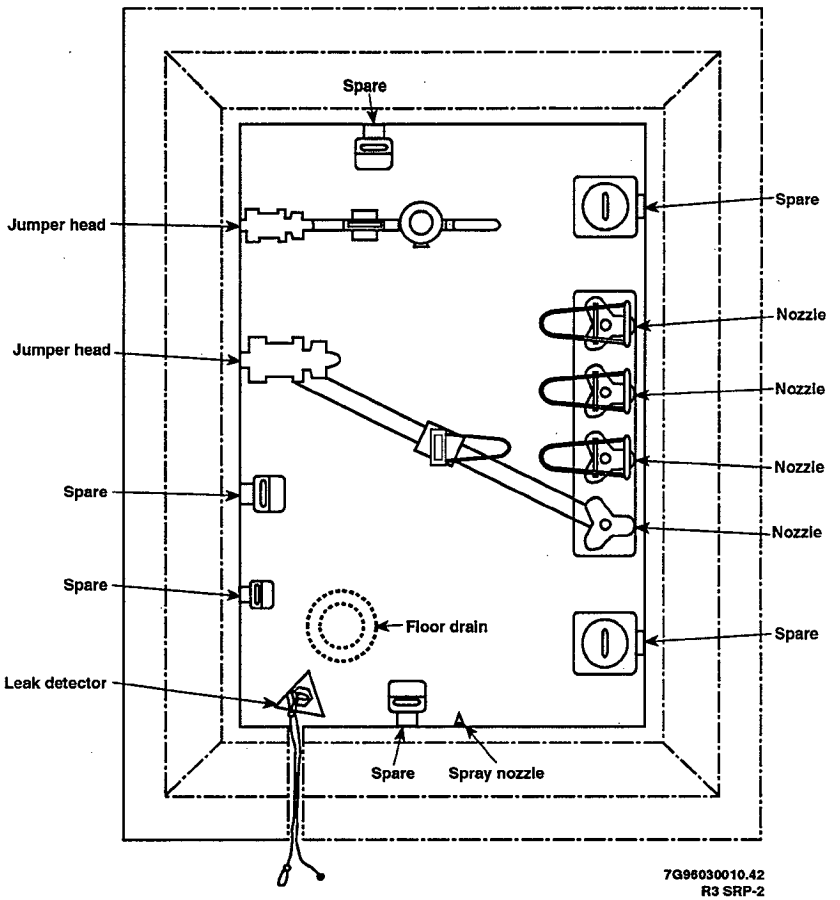

Figure B2-45. A Typical Diverter Station.

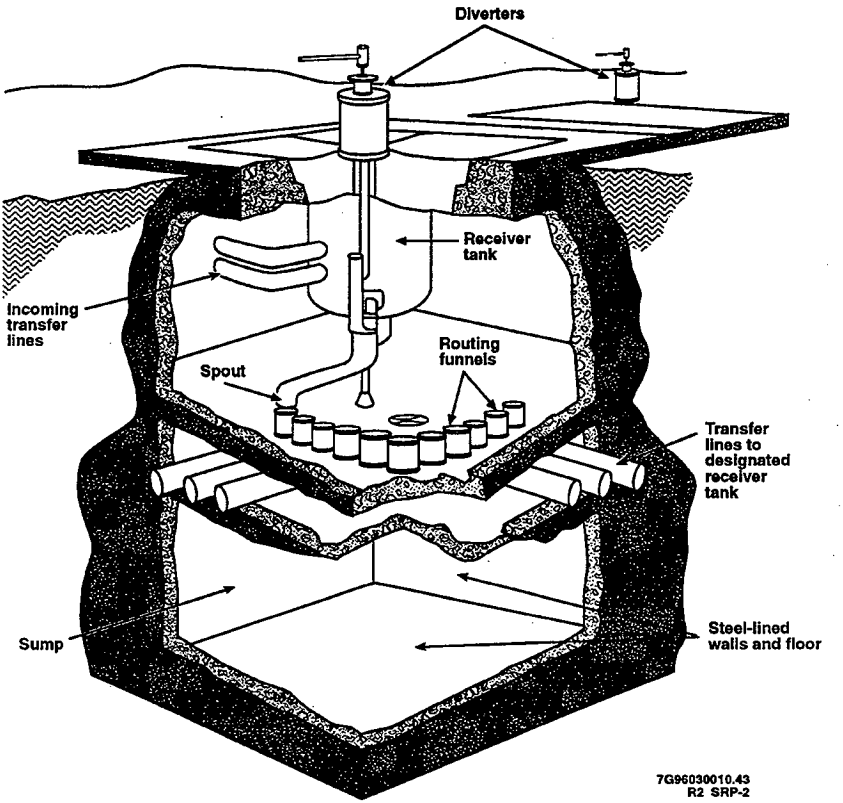

Figure B2-46. Jet Pump System.

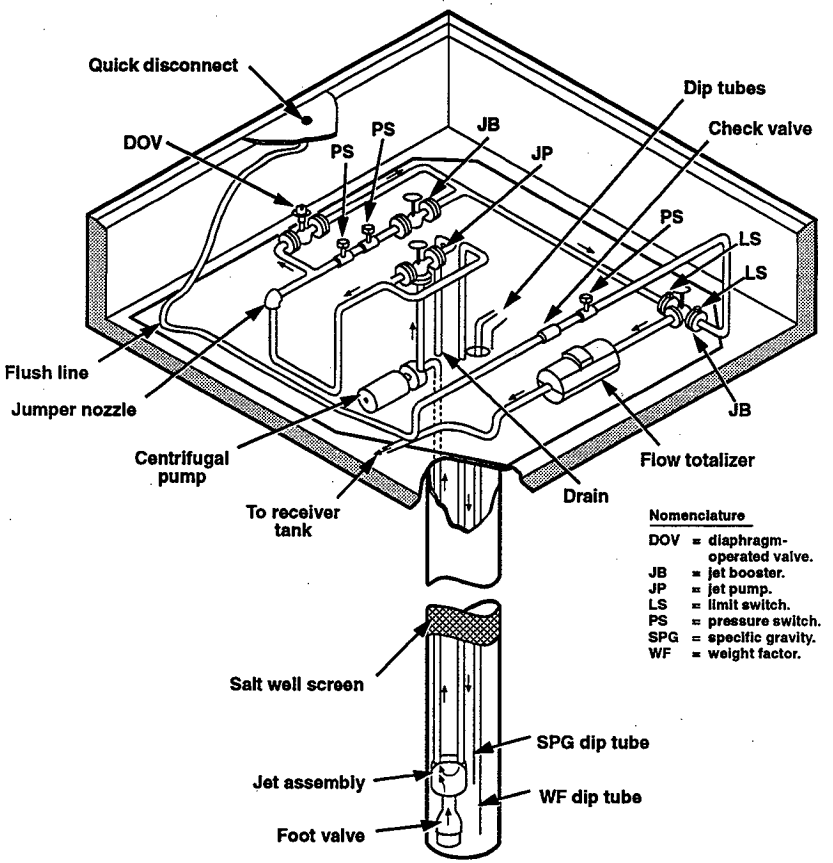

Figure B2-47. A Typical Centrifugal Pump.

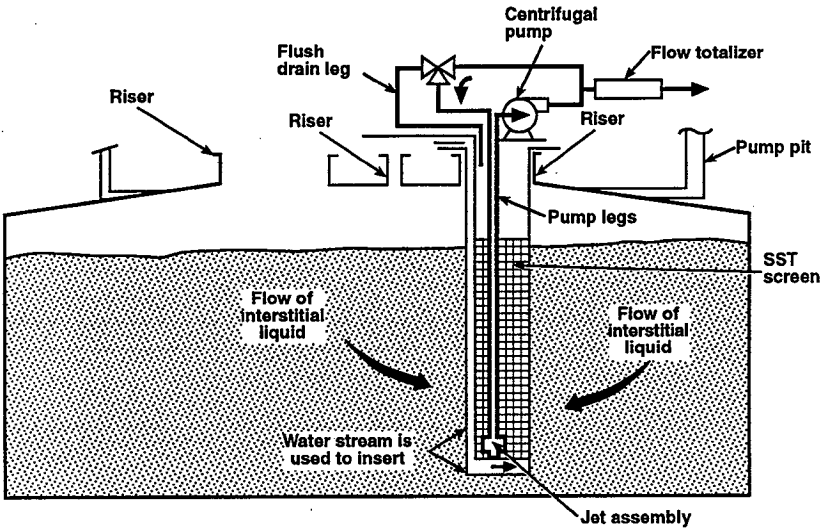

Figure B2-48. Drawing of a Food Instrument Corporation Gauge.

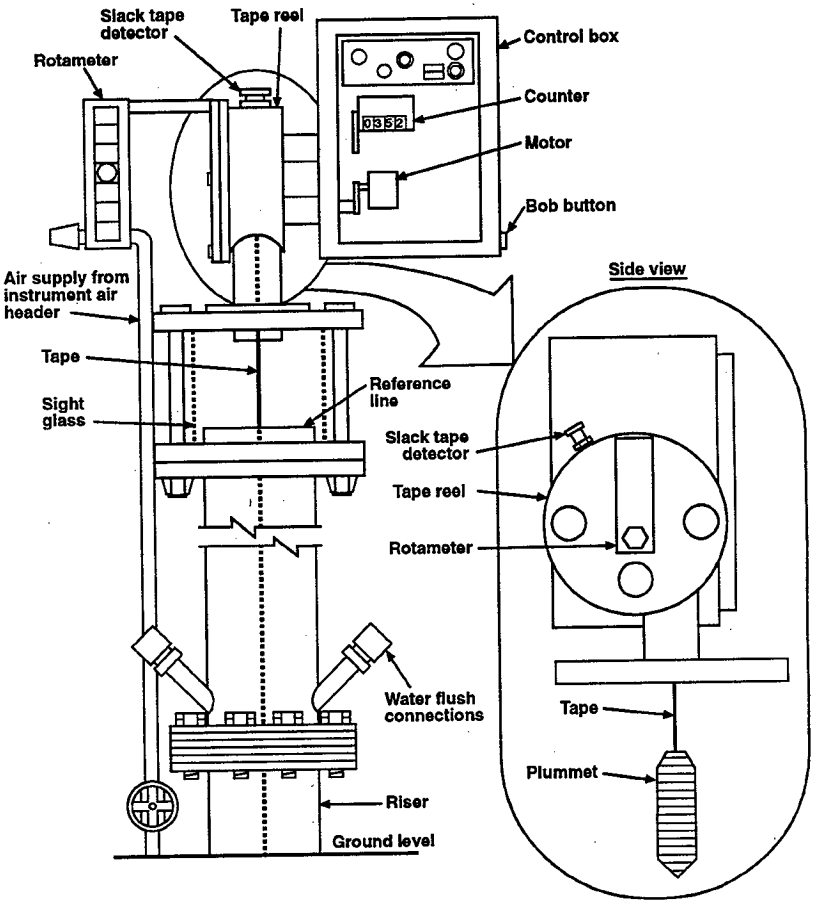

Figure B2-49. Drawing of an ENRAF Gauge.

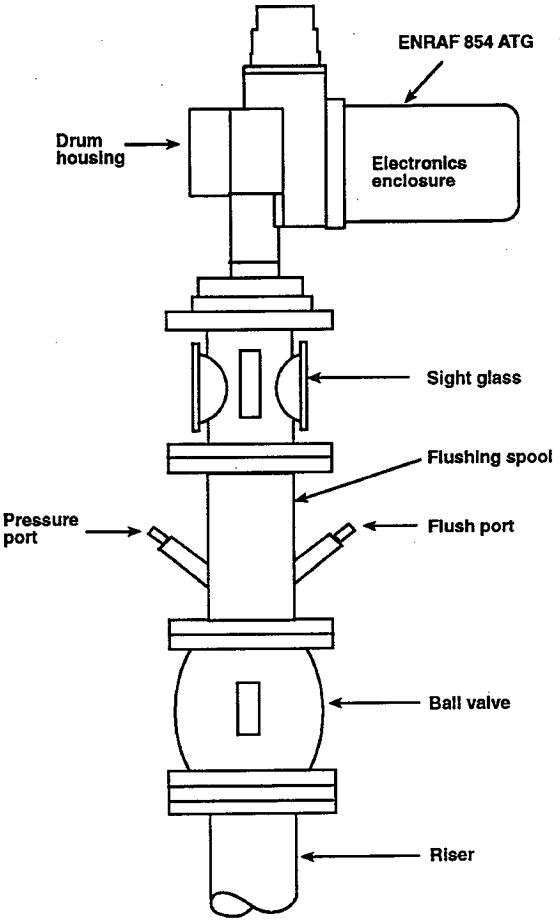

Figure B2-50. Specific Gravity and Weight Factor Monitoring.

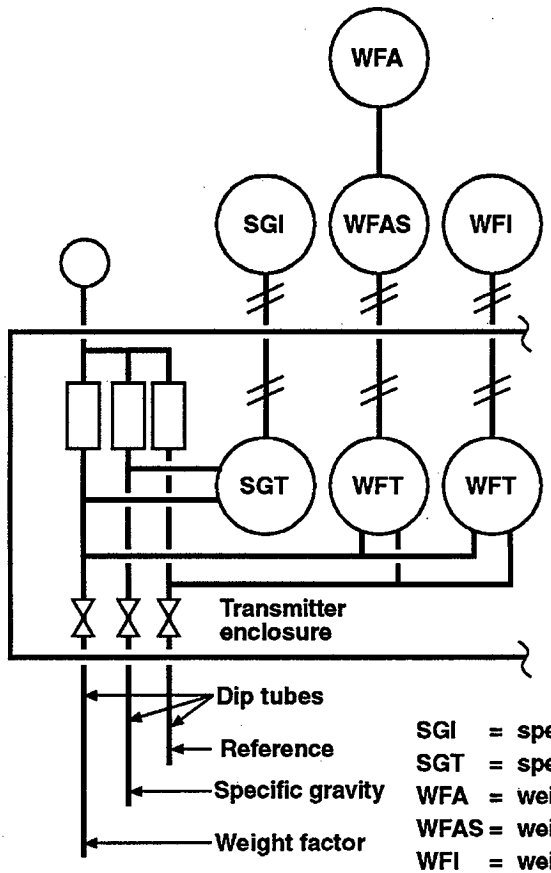

SGI = specific gravity indicator.
SGT = specific gravity transmitter.
WFA = weight factor alarm.
WFAS = weight factor alarm switch.
WFI = weight factor indicator.
WFT = weight factor transmitter.

7G96030010.16
R2 SRP-2

Figure B2-51. Sludge-Level Measuring Assembly.

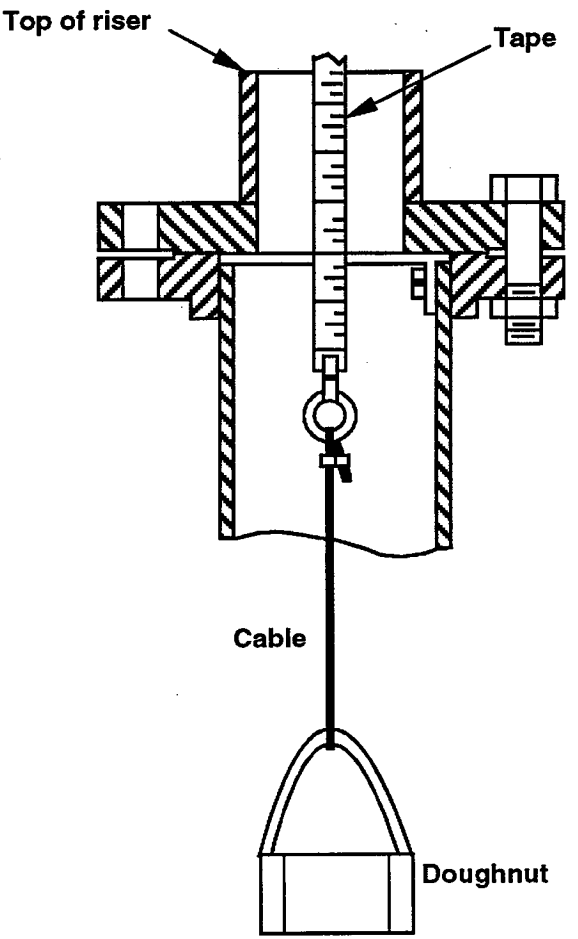

7G96030010.55
R2 SRP-2

Figure B2-52. Leak Detection Systems.

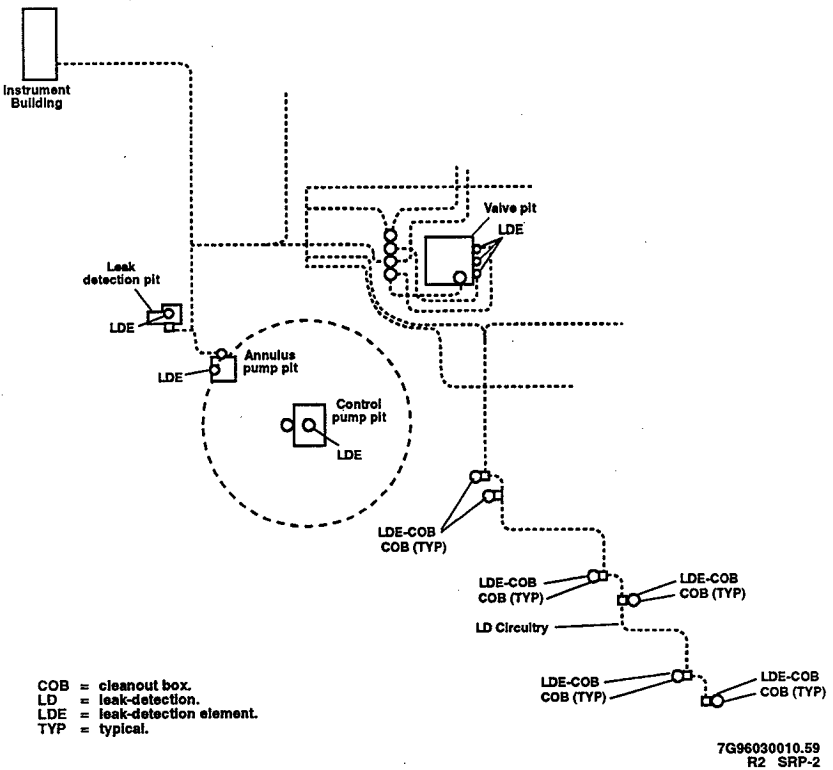

Figure B2-53. Instrumentation for Leak Detection Pit.

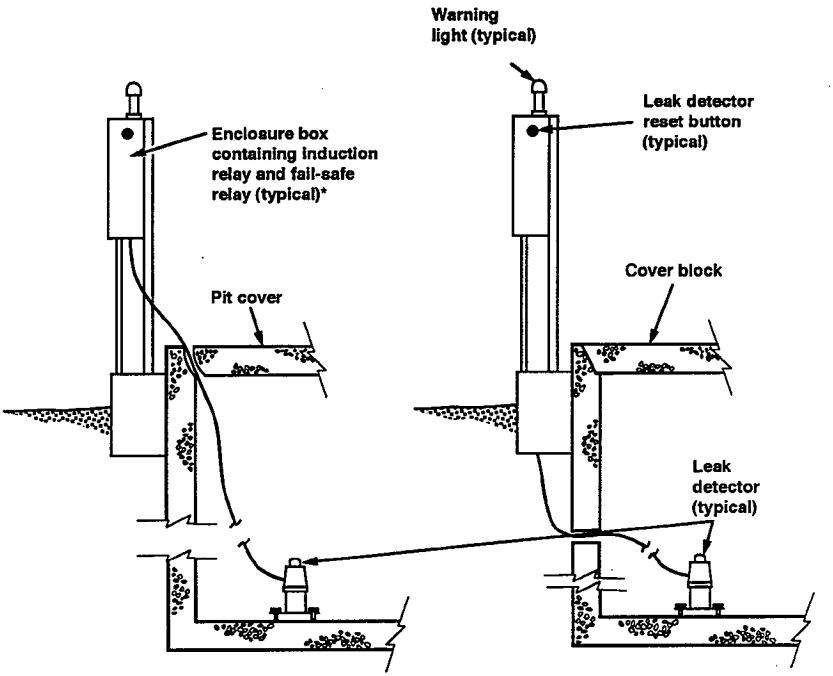

* The induction relay functions on liquid level, and the fail-safe relay functions on loss of power.

7G96030010.57
R3 SRP-2

Figure B2-54. Schematic of a Typical Radiation Detection Pit with Sump (Figure B2-18).

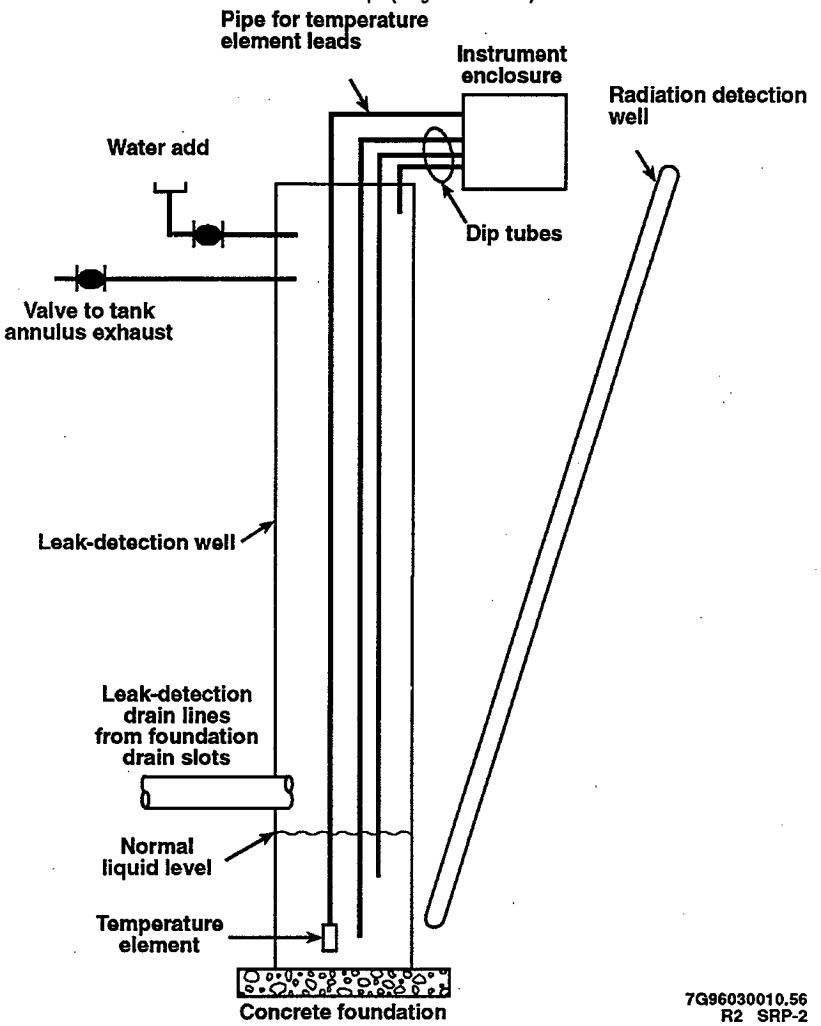

Figure B2-55. A Typical Leak Detection Transmitter Enclosure.

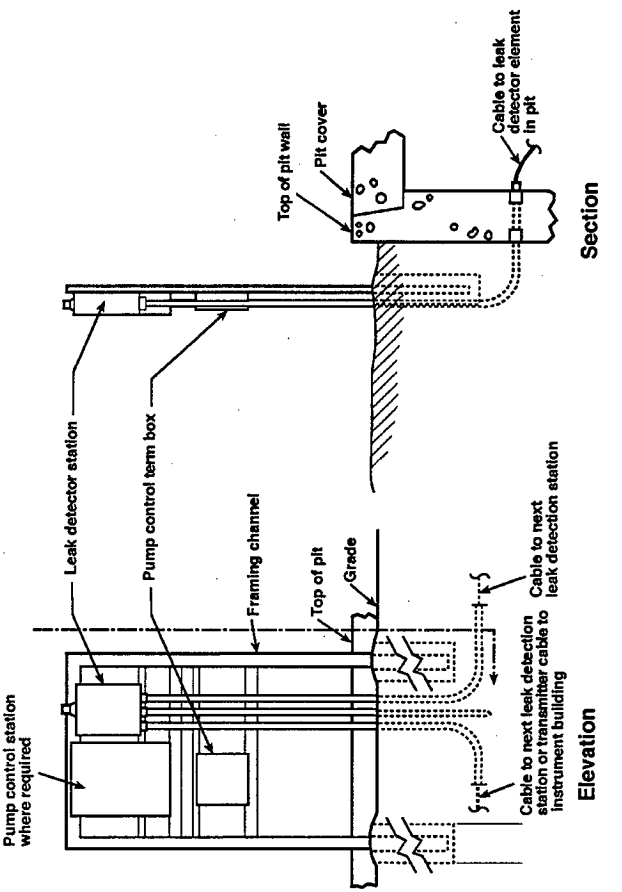

Figure B2-56. Typical Double-Shell Tank Thermocouple Element Location.

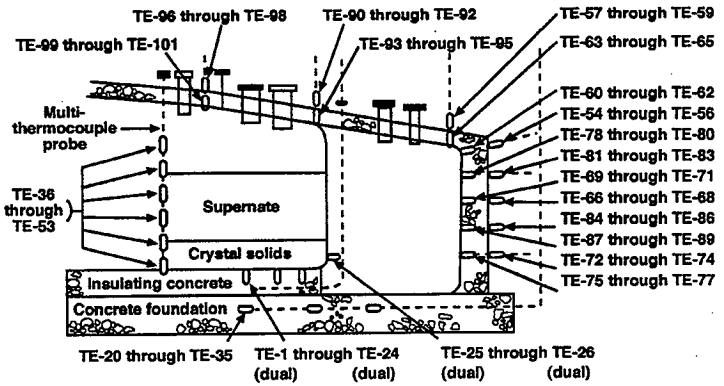

Partial Cross Section

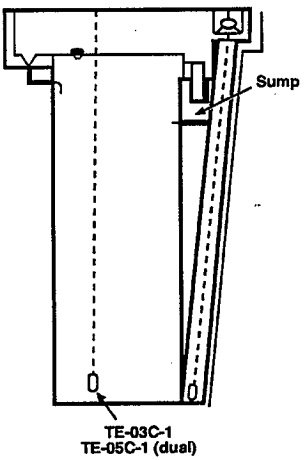

Leak Detection Well

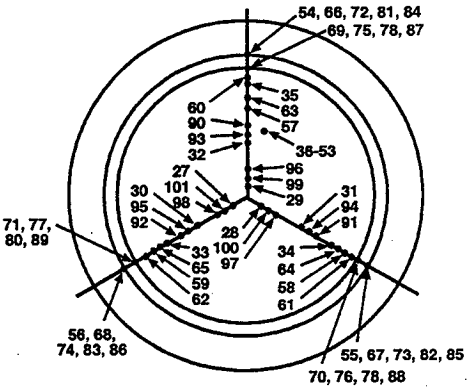

Plan View

7G96030010.61
R2 SRP-2

TE = temperature element.

Figure B2-57. Typical Double-Shell Tank Temperature Measurement Probe.

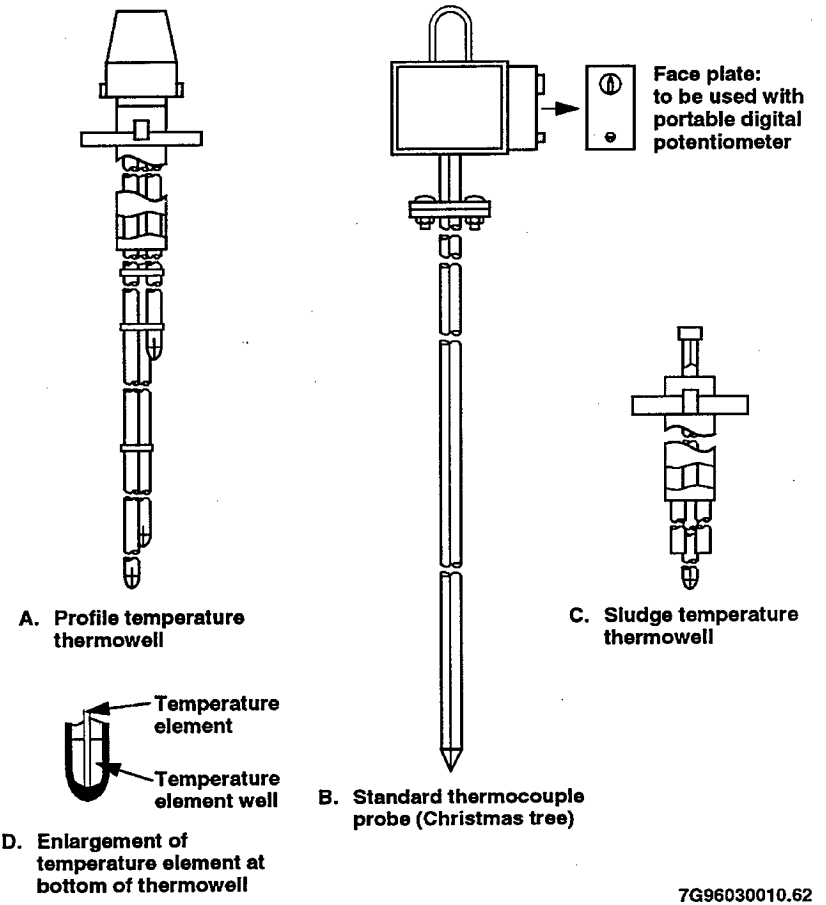

Figure B2-58. Typical In-Tank Thermocouple Arrangement.

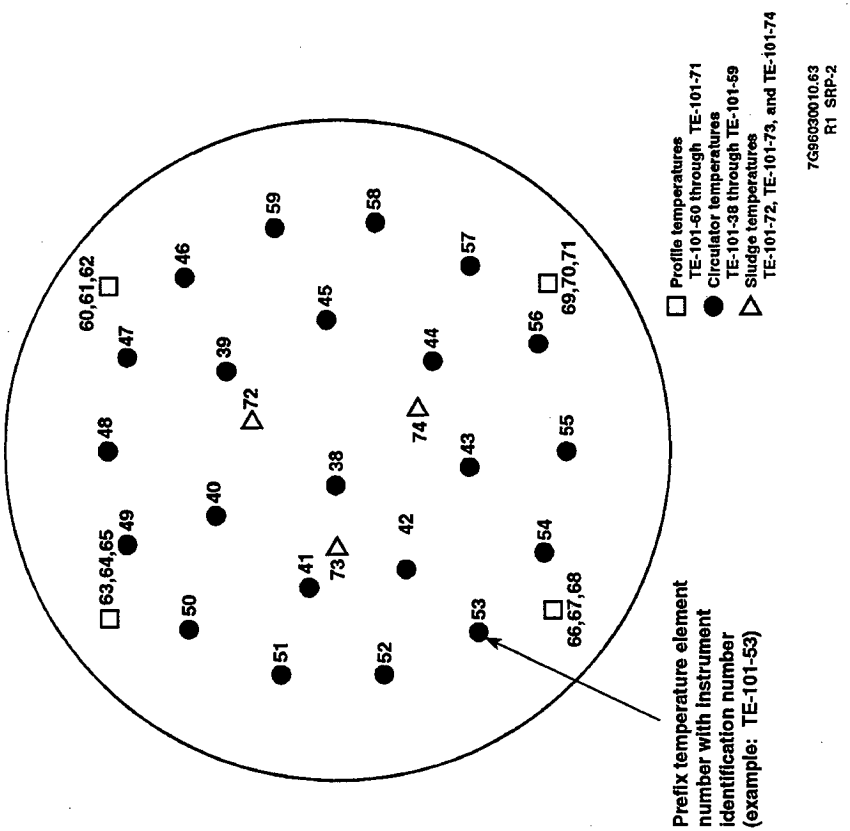

Figure B2-59. Typical Double-Shell Tank Terminal Box Locations.

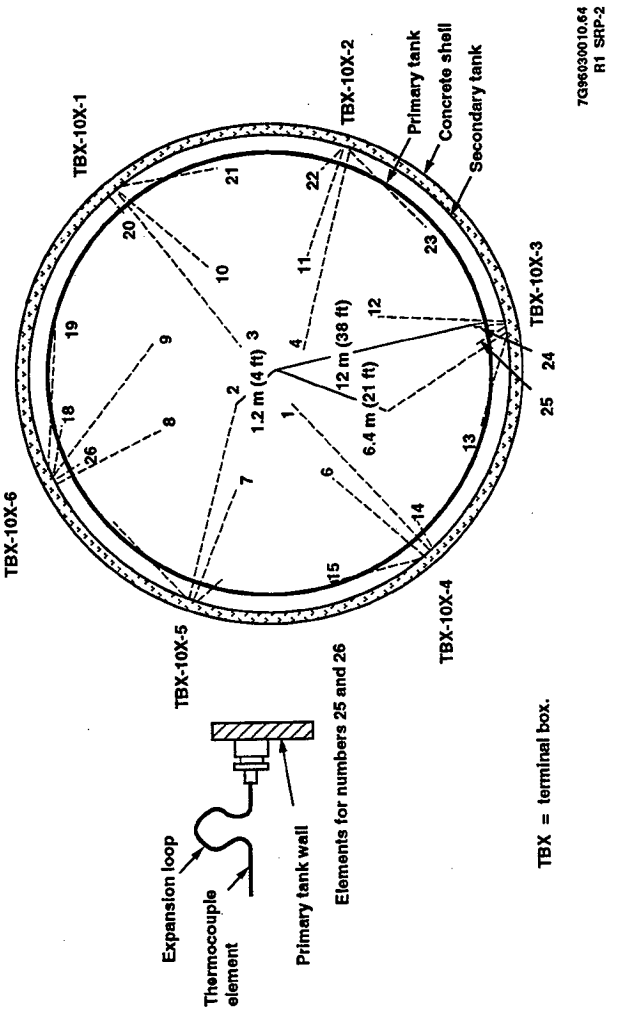

Figure B2-60. Core Sampler Assembly.

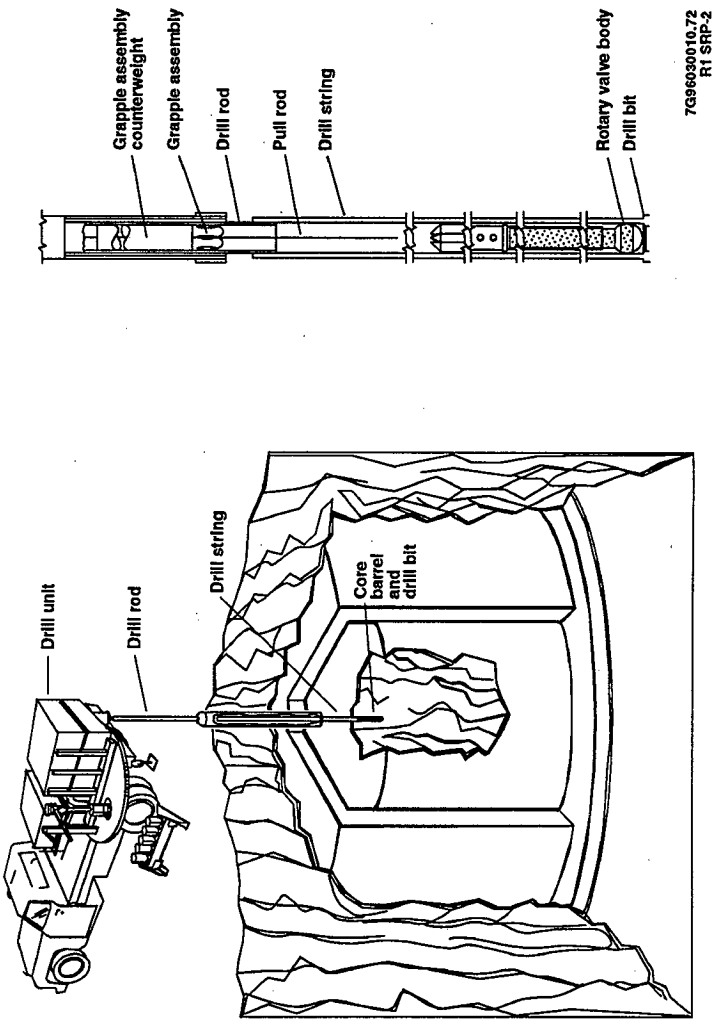

Figure B2-61. A Typical Mixer Pump.

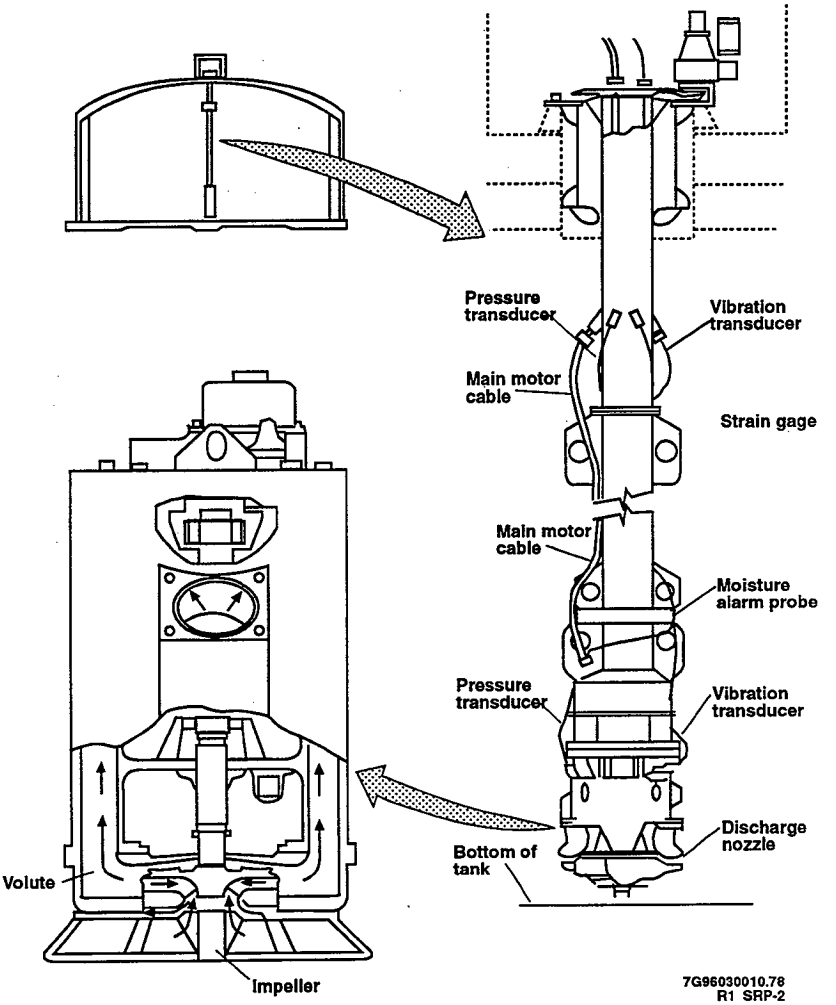

Figure B2-62. Typical Stack Sampling and Monitoring System.

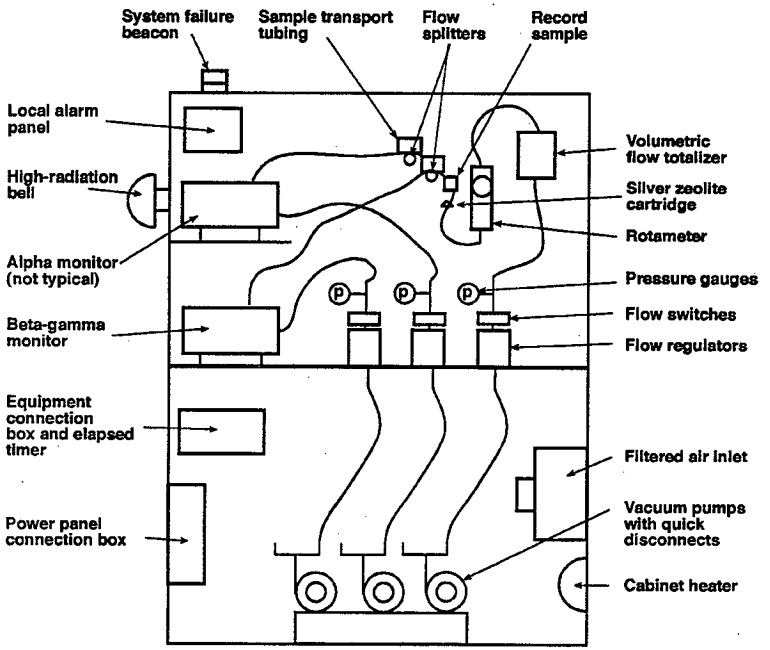

Figure B2-63. 200 East Electrical Switching Diagram. (1 of 2 sheets).

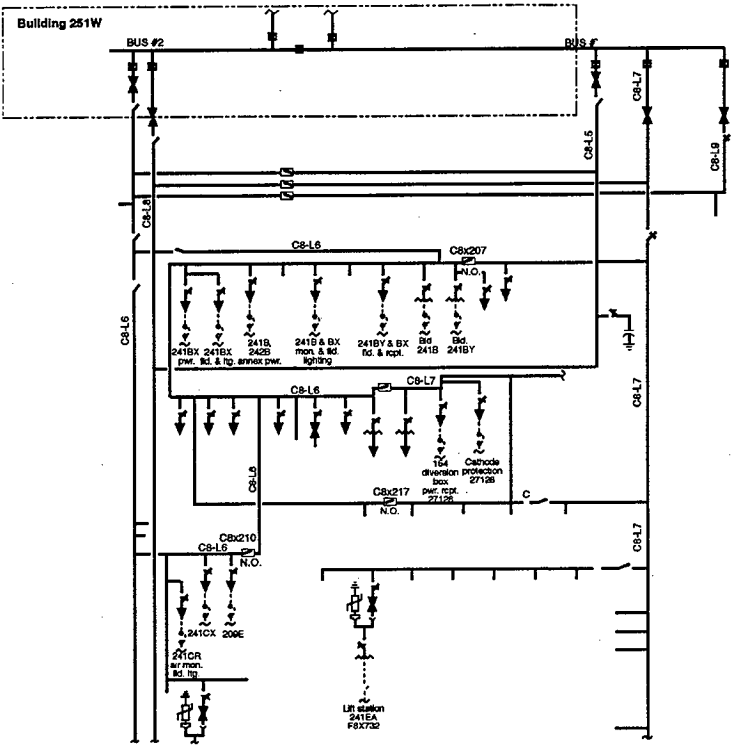

Bld. = building.
fld. = flood.
ltg. = lighting.
mon. = monitor.
N. O. = normally open.
pwr. = power.
rcpt. = receptacle.

7G9603001O.71B1
SRP-2

Figure B2-63. 200 East Electrical Switching Diagram. (2 of 2 sheets)

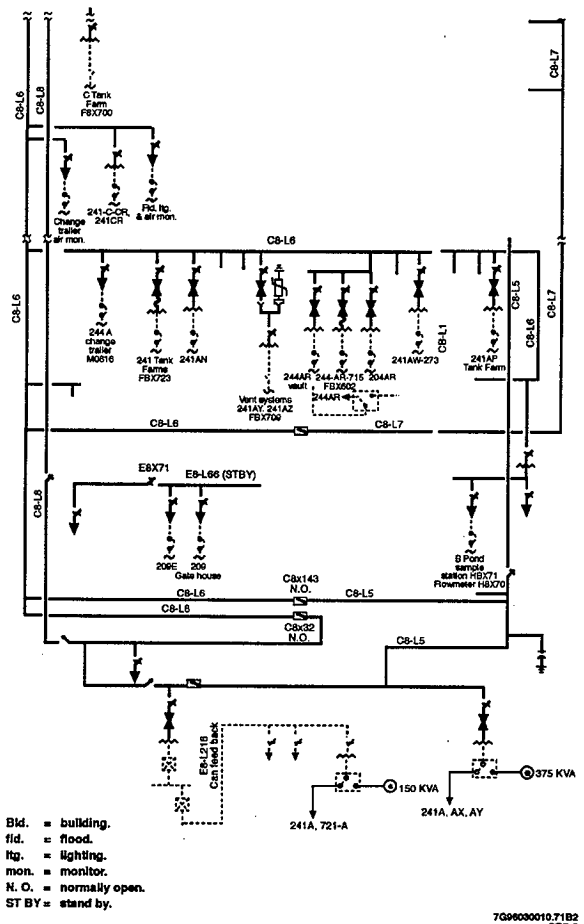

Figure B2-64. 200 West Electrical Switching Diagram. (1 of 2 sheets)

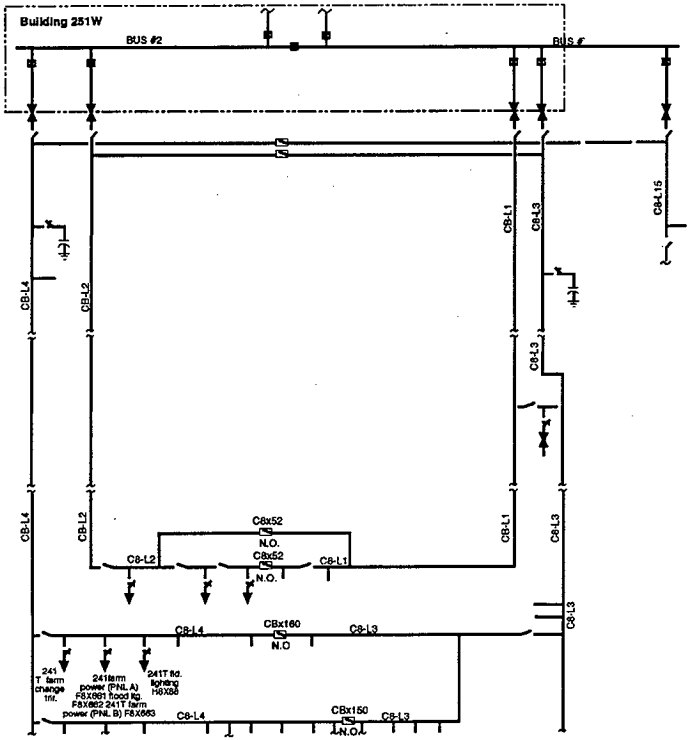

fld. = flood.
ltg. = lighting.
N. O. = normally open.
PNL = panel.
trlr = trailer.
TWRS = Tank Waste Remediation System

Lines not terminating at facility are power leads to non-TWRS facilities.

7Q98030010.71A1
R8 BRF-2

Figure B2-64. 200 West Electrical Switching Diagram. (2 of 2 sheets)

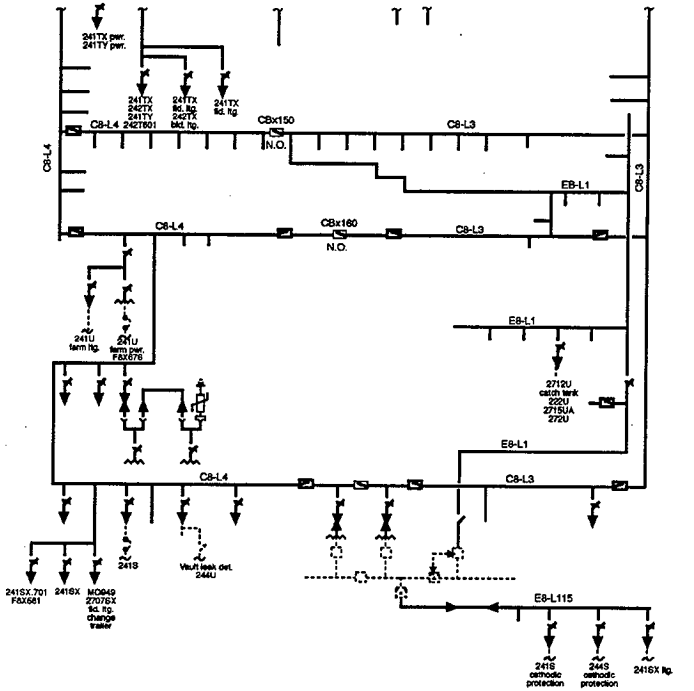

Lines not terminating at facility are power leads to non-TWRS facilities.

Bld. = building.
det = detector.
fld. = flood.
ltg. = lighting.
N. O. = normally open.
pwr. = power.
TWRS = Tank Waste Remediation System

7Q96030010.71A2
R2 SRP-2

Figure B2-65. Salt Well Jet Pump Isometric View.

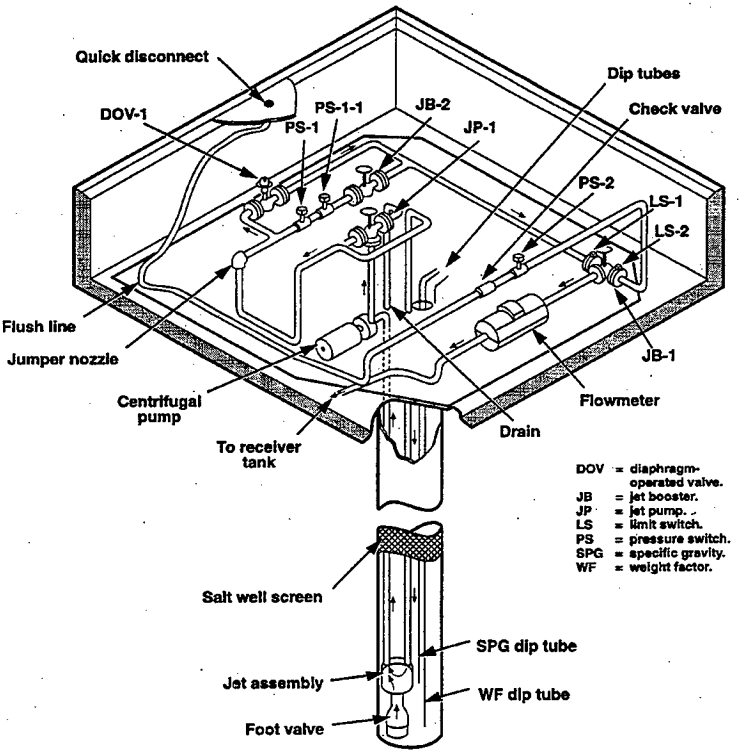

Figure B2-66. Jet Pump Unit and Foot Valve.

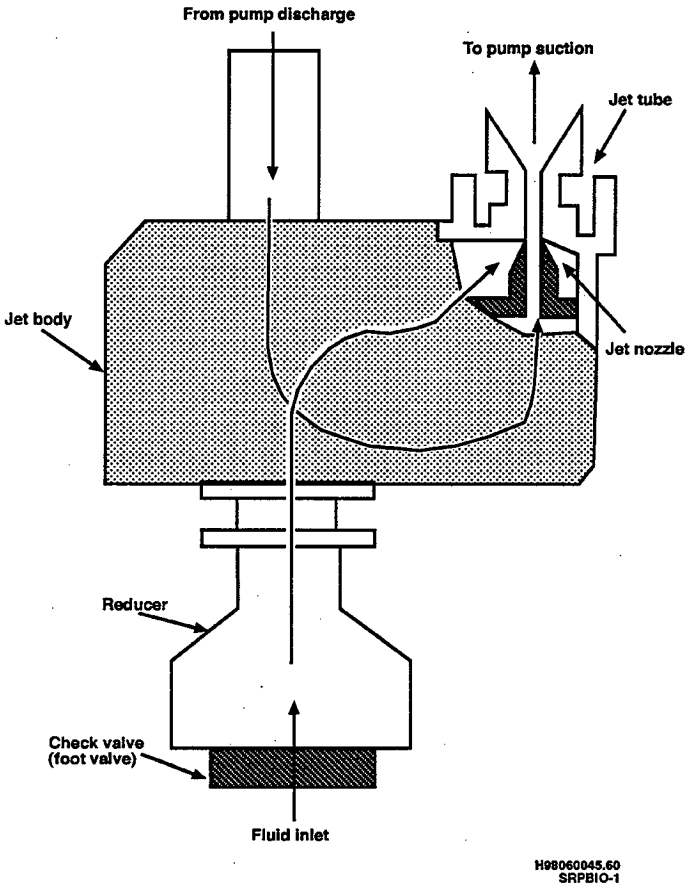

Figure B2-67. Salt Well Pump Piping and Instrument Diagram.

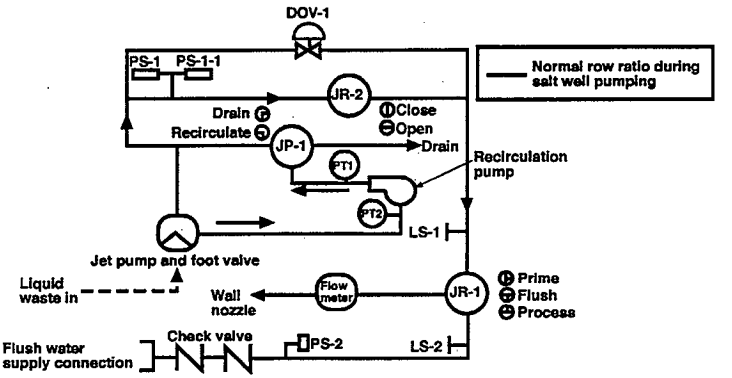

DOV = diaphragm-operated valve.
JB = jet booster.
JP = jet pump.
JR = foot valve.
LS = limit switch.
PS = pressure switch
PT = pressure transmitter.

H98060045.61R1
SRPBIO-1

Figure B2-68. Standard Supplemental COB Enclosure.

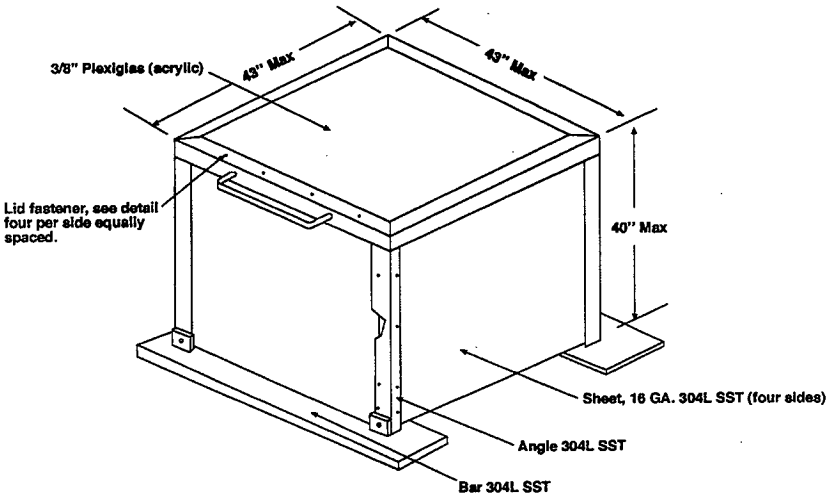

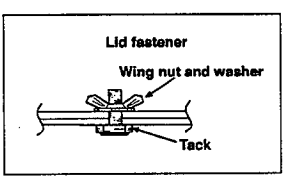

Max = maximum
SST = stainless steel
GA = gauge
COB = cleanout box

H98060045.62
SRPBIO-1

Table B2-1. Facilities and Activities Not Included in the Tank Waste Remediation System Basis for Interim Operation.

Facility/Activity	Existing or planned safety documentation*
Evaporator 242-S	Existing safety documentation (WHC-SD-WM-SSP-002) Shutdown facility Single-use safety analysis report prepared in decontamination and decommissioning
Evaporator 242-T	Existing safety analysis report (WHC-SD-HS-SAR-009) Shutdown facility Single-use safety analysis report prepared in decontamination and decommissioning
Grout Treatment Facility	Existing safety analysis report (WHC-SD-WM-SAR-027) Standby facility Special-use safety analysis report if future mission developed
Rotary Mode Core Sampling	Existing safety documentation (WHC-SD-WM-SAD-035), with the exception of flammable gas hazards addressed in this BIO.
Purgewater Treatment Facility (nonnuclear facility)	Existing safety documentation (*Liquid Level Monitoring Operations Manual*)
241-SY-101 Mixer Pump Operations	Existing safety analysis report (LA-UR-92-3196 [Revision 14]) Level I controls from Section 6.0 of LA-UR-92-3196 identify authorization basis level controls for mixer pump operation in 241-SY-101

*See DOE 5480.23, 1992, Nuclear Safety Analysis Reports, Section 9, "Implementation Requirements," Paragraph b.(2) with Attachment 1, Section 3, "Guidance," Paragraphs f.(10)(b), (c), (e), (f), and (i), U.S. Department of Energy, Washington, D.C.; and DOE-STD-3011-94, 1994, Guidance for Preparation of DOE 5480.22 (TSR) and DOE 5480.23 (SAR) Implementation Plans, Change 0, Section 4.2.1 "The Need for the Upgrade," and Section 4.2.4.2 "BIO Scope and Level of Effort," paragraphs c, d, and e, U.S. Department of Energy, Washington, D.C.

Liquid Level Monitoring Operations Manual, 1991, Course Number 3500050, Westinghouse Hanford Company, Richland, Washington.

LA-UR-92-3196, 1995, A Safety Assessment for Proposed Pump Mixing Operations to Mitigate Episodic Gas Releases in Tank 241-SY-101: Hanford Site, Richland, Washington, Rev. 14, Los Alamos National Laboratory, Los Alamos, New Mexico.

WHC-SD-HS-SAR-009, 1983, 242-T Evaporator Facility Standby/Shutdown to Condition V Safety Analysis Report, Rev. 0, Rockwell Hanford Company, Richland, Washington.

WHC-SD-WM-SAR-027, 1988, Hazards Identification and Evaluation Report for the Operation of the Grout Facilities & Near Surface Disposal of Grouted Phosphate/Sulfate Low-Level Liquid Waste, Rev. 2, Westinghouse Hanford Company, Richland, Washington.

WHC-SD-WM-SAD-035, 1996, A Safety Assessment for Rotary Mode Core Sampling in Flammable Gas Single-Shell Tanks, Hanford Site, Richland, Washington, Rev. 0-a, Westinghouse Hanford Company, Richland, Washington.

WHC-SD-WM-SSP-002, 1988, 242-S Facility Shutdown/Standby Plan, Rev. 0, Westinghouse Hanford Company, Richland, Washington.

DOE = U.S. Department of Energy.

FSAR = Final Safety Analysis Report.

Table B2-2. Projects Not Included in the Tank Waste Remediation System Basis for Interim Operation that have the Potential to Impact Existing Facility Design or Operations Descriptions.

Project number	Project description	Current status	
		Project	Safety documentation
Authorized Projects			
B-604	Water System Reservoir Area Upgrades: Project upgrades raw and sanitary water reservoir in the 200 East. Raw and sanitary water tielines will connect the 200 East and 200 West Areas.	Construct	NI
W-211	Initial Tank Retrieval Systems: Provides mobilization and retrieval systems for 10 DSTs.	Design	Safety documentation prepared
W-369	Watch List Tank Standard Monitoring System, Phase II: Provides a standardized hydrogen monitoring system for the watch list tanks.	Construct	NI
W-451	Tank Farm Gas Characteristics.	Construct	NI
W-454	AW Jumper Manifold Upgrade: Provides valved manifolds with jumpers in the 241-AW tank farm valve pits AW-A and AW-B.	Design	NI
W-314	Tank Farm Restoration and Safe Operations: Provides capital upgrades to selected tank farm instrumentation/control, ventilation, waste transfer, and electrical systems. Phase I supports waste transfer systems for TWRS privatization with the exception of the TWRS privatization feed tanks. Phase II supports tank farm-wide ventilation, electrical, and in-tank instrumentation upgrades.	Design	Phase I: Safety documentation in preparation Phase II: NI

FSAR = Final Safety Analysis Report
DST = double-shell tank
TWRS = Tank Waste Remediation System
NI = None identified

Table B2-3. Current Status of Single-Shell and Double-Shell Underground Waste Storage Tanks
(For current status of SSTs and DSTs,
see most current version of HNF-EP-0182,
Tank Farm Surveillance and Waste Status Summary Report For Month Ending...
The report is published each calendar month.)

Table B2-4. Typical Compounds Generated by Production Processes at the Hanford Site.

Process	Typical compounds
Bismuth phosphate	$NaOH$, $NaNO_3$, $NaAlO_2$, Na_2SiO_3, $NaNO_2$, Na_2CO_3, Na_2SO_4, Na_3PO_4, $Fe_2(SO_4)_3$, $(NH_4)_2SiF_6$, $(NH_4)_2SO_4$, $Cr(NO_3)_3$, NH_4NO_3
Reduction oxidation (REDOX)	$NaAlO_2$, $NaOH$, $NaNO_3$, $NaNO_2$, Na_2SiO_3, $Na_2Cr_2O_7$, Na_2SO_4, $Cr(OH)_3$, $Fe(OH)_3$
Plutonium uranium extraction (PUREX)	KOH, $NaOH$, $NaNO_3$, $NaPO_4$, $NaSiO_3$, KF, NaF, Na_2SO_4, $Fe(OH)_3$, $Cr(OH)_3$, $Ni(OH)_2$, $NaNO_2$, ZrO_2-$2H_2O$, Sn, $NaAlO_2$, Na_2CO_3, MnO_2
Uranium recovery	SO_4^{-2}, PO_4^{-3}, NO_3^-, Cl^-, Na^+, $Fe(OH)_3$
B Plant Waste Fractionization Process	$H^3[P(W^3O^{10})^4]$-$14H_2O$ phosphotungstic acid, 2-hydroxyethylthylenediamine-triacetic acid (HEDTA), ethylenediaminetetraacetic acid (EDTA), hydroxyacetic acid, citric acid, Na_2SO_4

Table B2-5. Major Facilities that Interface with Tank Waste Remediation System. (2 sheets)

Facility of origin[a,b]	Mode	Junction	Destination[b]	Waste stream
200 East Area				
WESF/B Plant	Transfer line	Diversion box 241-ER-152[c]	241-AW Tank Farm, 241-AP Tank Farm	Facility decontamination solutions
242-A Evaporator[d]	Transfer line (steam transfer)	Valve pit 241-AW-A, 241-AW-B	241-AW (dedicated transfer, dump, and diversion lines)	Evaporator product (double-shell slurry feed)
PUREX Facility (no longer active)	Transfer line	Diversion box 241-A-151[c]	241-AW Tank Farm	Facility decontamination solutions
Transition facilities	Tanker trailer, transfer line, or railcar	N/A	Unspecified tank farm	Flush solutions and other radioactive waste water
Tank farms	Truck	N/A	Solid waste facilities	Solid waste, low- and high-level radioactive waste
TWRS facilities	Truck	N/A	Solid waste facilities	Solid waste
200 West Area				
219-S Building	Transfer line	N/A	244-S DCRT	Laboratory waste 222-S
T Plant	Railcar	204-AR Waste Unloading Facility[e]	241-A Tank Farm	Facility decontamination solutions
Z Plant (PFP)	Transfer line (steam transfer)	Double-contained receiver Tank 244-TX[e]	Tank SY-102	Facility decontamination solutions
U Plant	Transfer line	Diversion box 154-UX[c]	Tank SY-102	Facility decontamination solutions
222-S Laboratory/ REDOX Facility	Transfer line	204-AR Waste Unloading Facility[e]	241-A Tank Farm	Dilute tank farm, TWRS, or other facility liquid sample analysis wastes
Transition facilities	Tanker trailer, transfer line, or railcar	N/A	Unspecified tank farm	Flush solutions and other radioactive waste water
Tank farms	Truck	N/A	Solid waste facilities	Solid waste, low- and high-level radioactive waste
Tank farms	Cross-site transfer line	Valve pits 241-SY-A, 241-SY-B, 241-UX-154[c]	Valve pit 241-ER-151	Low- and high-level waste solution
TWRS facilities	Truck	N/A	Solid waste facilities	Solid waste

Table B2-5. Major Facilities that Interface with Tank Waste Remediation System. (2 sheets)

300 Area				
340 Building	Railcar	204-AR Waste Unloading Facility[a]	241-A Tank Farm	Radioactive waste water

[a]Other facilities, not identified in this table, are in transition and may transfer liquid wastes to tank farm facilities or hazardous wastes to 209-E Complex.
[b]See Figures 2-1 and 2-2 for facility locations.
[c]TWRS is responsible for valving, piping, and jumpers within diversion box on valve pit and transfer lines exiting diversion box or valve pit.
[d]The following 242-A Evaporator transfer lines (1) interface with Tank 241-AW-102 drain and pump pits and TWRS valve pits 241-AW-A and 241-AW-B and (2) are outside of the scope of this BIO:
SN-269, -270: double-shell slurry feed lines to 242-A
DR-335: 242-A drop out line
DR-334, -343, -338: 242-A drain lines
SL-167, 168, -113, -114: slurry out lines to valve pits.
[e]TWRS is responsible for in-facility operations and transfer lines from facility.
N/A = not applicable.
PFP = Plutonium Finishing Plant.
PUREX = Plutonium Uranium Extraction.
REDOX = Reduction Oxidation.
TWRS = Tank Waste Remediation System.
WESF = Waste Encapsulation and Storage Facility.

Table B2-6. Single-Shell Tanks Within the Hanford Site.

Tank farm	Year constructed	Number of tanks	Operating volume (per tank)		Diameter		Height (top of dome)		Liner height		Operating depth	
			L	gal	m	ft	m	ft	m	ft	m	ft
200 East Area												
B	1943-44	12	2.0 E+06	5.3 E+05	23	75	9.1	29.8	5.5	18	5.2	17
		4	2.1 E+05	5.5 E+04	6.1	20	8	26.3	7.6	25	7.3	24
C	1943-44	12	2.0 E+06	5.3 E+05	23	75	9.1	29.8	5.5	18	5.2	17
		4	2.1 E+05	5.5 E+04	6.1	20	8	26.3	7.6	25	7.3	24
BX	1946-47	12	2.0 E+06	5.3 E+05	23	75	9.1	29.8	5.5	18	5.2	17
BY	1948-49	12	2.9 E+06	7.6 E+05	23	75	11	37.3	7.3	24	7.0	23
A	1954-55	6	3.8 E+06	1.0 E+06	23	75	14	46	9.7	32	9.4	31
AX	1963-64	4	3.8 E+06	1.0 E+06	23	75	14	46	9.7	32	9.4	31
200 West Area												
T	1943-44	12	2.0 E+06	5.3 E+05	23	75	9.1	29.8	5.5	18	5.2	17
		4	2.1 E+05	5.5 E+04	6.1	20	8	26.3	7.6	25	7.3	24
U	1943-44	12	2.0 E+06	5.3 E+05	23	75	9.1	29.8	5.5	18	5.2	17
		4	2.1 E+05	5.5 E+04	6.1	20	8	26.3	7.6	25	7.3	24
S	1950-51	12	2.9 E+06	7.6 E+05	23	75	11	37.3	7.3	24	7.0	23
TX	1947-48	18	2.9 E+06	7.6 E+05	23	75	11	37.3	7.3	24	7.0	23
TY	1951-52	6	2.9 E+06	7.6 E+05	23	75	11	37.3	7.3	24	7.0	23
SX	1953-54	15	3.8 E+06	1.0 E+06	23	75	13	44	9.7	32	9.4	31

Table B2-7. Summary of Single-Shell Tank Active Ventilation Systems Equipment.

Facility	Area vented	Stack description			Exhaust fan description		Ventilation systems	
		Number	Height		Number	Design capacity (ft^3/min)[a]	Equipment	Filters
			m	ft				
241-C-105/106	Portable	296-P-16	3.0	10	N/A	7,000 (@70 °F)	Deentrainer	HEPAs - 2 in series
241-SX	Primary	296-S-15	4.6	15	K1-3-2 N[b] K1-3-1 S	6,100	None	PF - 1 per fan HEPAs - 2 per fan in series, 2 parallel banks

Note: Refer to Addendum 1 for ventilation system information used in 241-C-105/106 during WRSS operation.
Source: WHC-SD-WM-ES-291, 1994, Tank Farm Sampling System Configuration and Efficiency Study, Rev. 1, Westinghouse Hanford Company, Richland, Washington.
[a]To convert ft^3/min to m^3/s, multiply by 4.72×10^{-4}.
[b]Only one fan operates at a time; flow is for each fan.
HEPA = high-efficiency particulate air (filter).
N/A = not applicable.
PF = prefilter.

Table B2-8. Dimensions and Capacities of Double-Shell Tanks.

Tanks	Diameter		Height at crown		Nominal capacity				Maximum capacity			
					Height		Amount		Height		Amount	
	m	ft	m	ft	m	ft	L	gal	m	ft	L	gal
200 East Area												
241-AY-101 and 241-AY-102	23	75	14.25	46.75	9.1	30	3,750,000	991,500	9.2	30.3	3,790,000	1,000,000
241-AZ-101 and 241-AZ-102	23	75	14.25	46.75	9.1	30	3,750,000	991,500	9.2	30.3	3,790,000	1,000,000
241-AW-101 through 241-AW-106	23	75	14.25	46.75	10.6	34.9	4,370,000	1,154,000	10.7	35.2	4,400,000	1,162,000
241-AN-101 through 241-AN-107	23	75	14.25	46.75	10.6	34.9	4,370,000	1,154,000	10.7	35.2	4,400,000	1,162,000
241-AP-101 through 241-AP-108	23	75	14.25	46.75	10.6	34.9	4,370,000	1,154,000	10.7	35.2	4,400,000	1,162,000
200 West Area												
241-SY-101 through 241-SY-103	23	75	14.25	46.75	10.6	34.9	4,370,000	1,154,000	10.7	35.2	4,400,000	1,162,000

Table B2-9. Design Parameters Common to the Double-Shell Tanks. (2 sheets)

Parameter	Tank Farm					
	241-AN[a]	241-AP[b]	241-AW[c]	241-AY[d]	241-AZ[e]	241-SY[f]
Design life (yr)	50	50	50	30	30	50
Live loading on backfill (lb/ft^2)	40 plus 50 ton concentrated	40 plus 50 ton concentrated	40 plus 50 ton concentrated	40 plus 50 ton concentrated	40 plus 50 ton concentrated	40 plus 50 ton concentrated
Maximum internal vacuum kPa in. H_2O	 1.5 6	 3 12	 1.5 6	 1.5 6	 1.5 6	 1.5 6
Maximum internal pressure kPa in. H_2O	 14.9 60	 14.9 60	 14.9 60	 14.9 60	 14.9 60	 14.9 60
Maximum temperature °C °F	 177 350	 177 350	 177 350	 177 sludge 350 sludge	 177 sludge 350 sludge	 121 250
Maximum HGR W Btu/h	 29,300/tank 100,000/tank	 29,300 100,000	 29,300 100,000	 1,172,000 4,000,000	 1,172,000 4,000,000	 14,700 50,000
pH range	8 to 14	8 to 14	8 to 14	8 to 14	8 to 14	8 to 14
Maximum sp. gr.	2.0	2.0	2.0	1.6 2.5 sludge	1.6 2.5 sludge	1.7
Seismic acceleration	0.25 g horizontal, 0.17 g vertical	0.25 g horizontal, 0.17 g vertical	0.25 g horizontal, 0.17 g vertical	0.25 g horizontal, 0.17 g vertical	0.25 g horizontal, 0.17 g vertical	0.25 g horizontal, 0.17 g vertical
Wind loads	UBC[g]	UBC[h]	UBC[i]	UBC[j]	UBC[j]	UBC[i]
Maximum tank wall temperature °C °F	 93.3 200	 149 300	 93.3 200	 204 400	 204 400	 121 250
Maximum annulus ventilation L/s ft^3/min	 2,890 6,125	 4,059 8,600	 2,266 4,800	 1,650 3,500	 1,650 3,500	 3,540 7,500

Table B2-9. Design Parameters Common to the Double-Shell Tanks. (2 sheets)

Parameter	Tank Farm					
	241-AN[a]	241-AP[b]	241-AW[c]	241-AY[d]	241-AZ[a]	241-SY[f]
Maximum primary ventilation m^3/s ft^3/min	472 1,000	472 1,000	472 1,000	1,900 4,000	1,900 4,000	472 1,000
Radiation exposure mSv/h mrem/h	≤0.01 ≤0.005 (241-AN-107) ≤1 ≤0.5 (241-AN-107)	≤0.005 ≤0.5	≤0.01 ≤1	≤0.01 ≤1	≤0.01 ≤1	N/A N/A

[a]ARH-CD-549, 1978, Functional Design Criteria: Additional High Level Waste Handling and Storage Facilities, Rev. 1, Atlantic Richfield Hanford Company, Richland, Washington.
[b]SD-340-FDC-001, 1982, Functional Design Criteria: Project B-340, 241-AP Tank Farm, Rockwell Hanford Operations, Richland, Washington.
[c]ARH-CD-362, 1973, Functional Design Criteria: Additional High Level Waste Storage Facilities, Rev. 2, Atlantic Richfield Hanford Company, Richland, Washington.
[d]ARH-205, 1967, Design Criteria: PUREX AY Tank Farm, Rev. 0, Atlantic Richfield Hanford Company, Richland, Washington.
ARH-1437, 1970, Design Criteria: PUREX AY Tank Farm, Rev. 0, Atlantic Richfield Hanford Company, Richland, Washington.
[e]FDM-T-200-00003, 1983, Aging Waste Tank Facility Description Manual, Rev. 0, Westinghouse Hanford Company, Richland, Washington.
[f]ARH-2930, 1973, Functional Design Criteria: Salt Cake Storage Facility, 241-SY Tank Farm, Rev. 0, Atlantic Richfield Hanford Company, Richland, Washington.
[g]UBC, 1974, Uniform Building Code, International Conference of Building Officials, Whittier, California.
[h]UBC, 1978, Uniform Building Code, International Conference of Building Officials, Whittier, California.
[i]UBC, 1970, Uniform Building Code, International Conference of Building Officials, Whittier, California.
[j]UBC, 1966, Uniform Building Code, International Conference of Building Officials, Whittier, California.
100 rem = 1 Sv.
HGR = heat generation rate.
mSv = millisievert.
NA = original design values not available from existing facility documentation.
sp. gr. = specific gravity.
T = temperature.
UBC = Uniform Building Code.

Table B2-10. Summary of Ventilation Systems Equipment for Double-Shell Tanks.

Facility	Area vented	Stack description			Exhaust fan description		Ventilation systems	
		Number	Height		Number	Design capacity (ft^3/min)[a]	Equipment	Filters
			m	ft				
241-AY/AZ	241-A-702 Isolated	296-A-17	15.2	50	K1-1-1[b] K1-1-2	4,000	Condenser Deentrainer	HEPAs – 2 in series per bank, 6 banks in parallel
241-AY/AZ	241-A-702 Isolated	296-P-26	3.0	10	Not available	4,000	Condenser Deentrainer	HEPAs – 2 in series
241-AY-101	Annulus	296-A-18	4.0	13	K1-3-2	3,520 (@350 °F)	None	HEPAs – 2 in series
241-AY-102	Annulus	296-A-19	4.0	13	K2-3-2	3,520 (@350 °F)	None	HEPAs – 2 in series
241-AY/AZ	241-A-702 Primary	296-A-42	17	55	AZ-K1-5-1A AZ-K1-5-1B	400 - 1,000 (each fan)	Condenser HEME	HEPAs – 2 in series separated by a HEGA. 2 banks in parallel
241-AZ	Annulus	296-A-20	4.9	16	K1-3-2	7,040 (@350 °F)	None	HEPAs – 2 in series per bank, 1 bank per tank
241-AW	Primary	296-A-27	4.9	16	K1-5-1[b] K1-5-2	1,000 (@70 °F)	Moisture separator	PF – 1 per fan HEPAs – 2 in series per fan
241-AW	Annulus	296-A-28	7.0	23	K2-5-1[c] K2-5-2	5,250 (@350 °F)	Moisture separator	HEPAs – 2 in series per fan
241-AN	Primary	296-A-29	4.6	15	K1-5-1[b] K1-5-2	600 (@70 °F)	Deentrainer	PF – 1 per fan HEPAs – 2 in series per fan
241-AN	Annulus	296-A-30	7.0	23	K2-5-1[c] K2-5-2	6,125 (@120 °F)	Moisture separator per fan	HEPAs – 2 in series per fan
241-AP	Primary	296-A-40	4.0	13	K1-5-1[b] K1-5-2	1,170 (@70 °F)	Deentrainer per fan	PF – 1 per fan HEPAs – 2 in series per fan
241-AP	Annulus	296-A-41	8.8	29	K2-5-1[b] K2-5-2	8,600 (@70 °F)	None	HEPAs – 2 in series per fan
241-SY	Annulus	296-P-22	3.0	10	K2-4-1	750 (@150 °F)	Moisture separator	PF – 1 HEPAs – 2 in series
241-SY	Primary	296-P-23	4.0	13	K1-4-1	700 (@200 °F)	Moisture separator	PF – 1 HEPAs – 2 in series
241-SY	Primary backup	296-P-28	3.4	11	P-28	1,000	Deentrainer	HEPAs – 2 in series

Source: WHC-SD-WM-ES-291, 1994, Tank Farm Sampling System Configuration and Efficiency Study, Rev. 1, Westinghouse Hanford Company, Richland, Washington.

[a]To convert ft^3/min to L/s, multiply by 0.472; to convert Fahrenheit to Celsius, subtract 32 degrees and multiply by 5/9.

[b]Only one fan operates at a time; flow is for each fan.

[c]Both fans operate together; flow is total flow for both fans.

HEGA = high-efficiency gas adsorber.
HEME = high-efficiency mist eliminator.
HEPA = high-efficiency particulate air (filter).
PF = prefilter.

Table B2-11. Summary of Double-Contained Receiver Tank Active Ventilation Systems Equipment.

Facility	Area vented	Stack description			Exhaust fan description		Ventilation systems
		Number	Height		Number	Design capacity (ft^3/min)[a]	Prefilters
			m	ft			
200 East Area							
244-A DCRT	Primary/ annulus	296-A-25	3.0	10	K1-5-1	150 (@350 °F)	PF — 1 per bank HEPAs — 2 in series per bank, 2 banks in parallel
244-BX DCRT	Primary/ annulus	296-B-28	3.4	11	EF-1	250	PF — 1 per bank HEPAs — 2 in series per bank, 3 banks in parallel, 1 bank in standby
244-CR Vault	Primary	296-C-5	15.2	50	291-CR-923-1[b] 291-CR-923-2	4,200	HEPAs — 2 stages
200 West Area							
244-S DCRT	Primary/ annulus	296-S-22	3.4	11	K1-5-1	165 (@240 °F)	PF — 1 per fan HEPAs — 2 per bank in series, 2 parallel banks
244-TX DCRT	Primary/ annulus	296-T-18	3.4	11	K1-5-1	250	PF — 1 per bank HEPAs — 2 in series per bank, 3 banks in parallel, 1 bank in standby
244-U DCRT	Primary/ annulus	296-U-11	3.4	11	K1-5-1 (not operational)	250	PF — 1 per bank HEPAs 2 in series per bank, 3 banks in parallel, 1 bank in standby

Source: WHC-SD-WM-ES-291, 1994, Tank Farm Sampling System Configuration and Efficiency Study, Rev. 1, Westinghouse Hanford Company, Richland, Washington.

[a]To convert ft^3/min to m^3/s, multiply by 0.472; to convert Fahrenheit to Celsius, subtract 32 degrees and multiply by 5/9.

[b]Only one fan operates at a time; flow is for each fan.

DCRT = double-contained receiver tanks.
HEPA = high-efficiency particulate air (filter).
PF = prefilter non testable.

Table B2-12. Catch Tank Capacity and Use.

Catch tank	Maximum capacity		Use
	L	gal	
200 East Area			
241-A-302A	31,940	8,438	Drainage from DB-241-A-151
241-A-350	2,940	776	Receives drainage from 241-A Tank Farm. Provides for routing 207-A Retention Basin waste (if out of specification) to Tank 241-AW-102
241-A-417	167,315	44,200	Drainage from 241-AY/241-AZ ventilation condensate system and possibly steam condensate from 241-AX-501 valve pit and 241-AZ-154
241-AX-152	41,640	11,000	Drainage from 241-AX-152 diverter station, DB-241-AX-155, AY-501 and 702-A seal pot
241-AZ-151	45,046	11,900	Drainage from DB-241-AZ-152, AZ loop seals, leak detection pits, 801-AZ Instrumentation Building, 241-AZ-702 Ventilation System, and precipitation and runoff
241-AZ-154	3,290	869	Drainage from TK-241-AZ-101 and TK-241-AZ-102 steam coils and precipitation and runoff
241-ER-311	66,934	17,682	Drainage from DB-241-ER-151 and DB-241-ER-152
200 West Area			
241-S-304	23,850	6,300	Drainage from DB-241-S-151 and precipitation and runoff
241-TX-302C	66,930	17,681	Drainage from DB-241-TX-154 and precipitation and runoff
241-U-301B	133,530	35,275	Drainage from DB-241-U-151, DB-241-U-152, DB-241-U-153, and DB-241-U-252
241-UX-302A	66,934	17,682	Drainage from DB-241-UX-154, 291-U stack, and precipitation and runoff
600 Area			
241-EW-151	2,940	776	Receives drainage from cross-site transfers vent station.

DB = diversion box.
TK = waste storage tank.

Table B2-13. Summary of Catch Tank Dimensions.

Catch tank	Material	Inside dimensions	
		Meters	Feet
200 East Area			
241-A-302A Pump pit Catch tank	RC 304L Stainless steel	1.5 x 1.5 x 1.3 3 dia x 5.03	5 x 5 x 4.33 9 dia x 16.5
241-A-350 Pump pit Catch tank	Concrete 304L stainless steel	3 x 3 x 2.82 1.35 dia x 2.11	9 x 9 x 9.25 4.44 dia x 6.91
241-A-417 Pump pit Catch tank	RC RC/steel liner (liner material unknown)	4.9 x 2.4 x 3.7 7.47 dia x 4.17	16 x 8 x 12 24.52 dia x 13.67
241-AX-152 Pump pit Catch tank	3 ksi RC 3 ksi RC/steel liner: ASTM A240-61T, type 304L stainless steel	1.8 x 1.8 x 2.41 6.76 x 1.8 x 3.48	6 x 6 x 7.92 22.17 x 6 x 11.42
241-AZ-151 Pump pit Catch tank	RC RC/steel liner: ASTM A569 carbon steel	1.8 x 1.8 x 3.33 7.3 x 1.8 x 3.4	6 x 6 x 10.92 24 x 6 x 11
241-AZ-154 Pump pit Catch tank	RC RC/steel liner: ASTM A569 carbon steel	1.5 x 1.5 x 2.25 1.5 x 1.5 x 1.5	5 x 5 x 7.38 5 x 5 x 5
241-ER-311 Pump pit Catch tank	Metal pipe 18-8 stainless steel	1.5 dia x 1.4 2.7 dia x 11.58	5 dia x 4.5 8.9 dia x 38
200 West Area			
241-S-304 Pump pit Catch tank	4 ksi RC, ASTM A-615 reinforced ASME SA 516 carbon steel	3.0 x 3.0 x 1.78 2.7 dia x 4.6	10 x 10 x 5.83 8.9 dia x 15
241-TX-302C Pump pit Catch tank	Culvert pipe Carbon steel	1.5 dia x 1.4 2.72 dia x 11.99	5 dia x 4.5 8.91 dia x 39.35
241-U-301B Pump pit Catch tank	Culvert pipe Concrete	1.5 dia x 1.5 6 dia x 4.72	5 dia x 5 20 dia x 15.5
241-UX-302A Pump pit Catch tank	Culvert pipe Carbon steel	1.5 dia x 1.4 2.72 dia x 11.99	5 dia x 4.5 8.91 dia x 39.35
600 Area			
241-EW-151 Pump pit, no pump Catch tank	N/A Carbon steel	N/A 1.35 dia x 2.11	N/A 4.44 dia x 6.91

ASME = American Society of Mechanical Engineers
ASTM = American Society of Testing and Materials.
ksi = kips (kilopounds) per square inch.
N/A = not applicable.
RC = reinforced concrete.

Table B2-14. Additional Catch Tank Attributes.

Catch tank	Cover			Bottom (applicable to lined concrete tanks only)		Walls
	Approximate depth		Material	Thickness (concrete thickness approximate)	Material	
	m	ft				
200 East Area						
241-A-302A	5.2	17	Soil over top	N/A	N/A	14.2 mm (0.56 in.)
241-A-350	5.2	17	Soil/pits	N/A	N/A	9.53 mm (0.375 in.)
241-A-417	4.3	14	Soil/pits	152 mm (6 in.) RC, 9.53 mm (0.375 in.) liner	RC, liner (liner unknown)	9.53 mm (0.375 in.) liner, 254 mm (10.00 in.) RC
241-AX-152	5.2	17	Pits	0.61 m (2 ft) RC, 3.18 mm (0.125 in.) liner	RC/ASTM A240, type 304L	0.76 m (2.5 ft) RC, 3.2 mm (0.125 in.) liner
241-AZ-151	5.2	17	Soil/pits	0.46 m (1.5 ft) RC, 10-Ga liner	RC/ASTM A569 CS	0.3 m (1 ft) RC, 10-Ga liner
241-AZ-154	3.4	11	Pit	0.46 m (1.5 ft) RC, 10-Ga liner	RC/ASTM A569 CS	0.46 m (1.5 ft) RC, 10-Ga liner
241-ER-311	5.2	17	Soil over top	N/A	N/A	12.77 mm (0.5 in.)
200 West Area						
241-S-304	7.9	26	Soil/pit	0.61 m (2 ft) RC	RC	0.2 m (8 in.), outer wall (not available)
241-TX-302C	8.8	29	Soil over top	N/A	N/A	14.2 mm (0.56 in.)
241-U-301B	1.8	6	Soil over top	N/A	N/A	14.2 mm (0.56 in.)
241-UX-302A	6.1	20	Soil over top	N/A	N/A	14.2 mm (0.56 in.)
600 Area						
241-EW-151	2.4	8	Soil/pits	N/A	N/A	9.53 mm (0.375 in.)

ASTM = American Society of Testing and Materials
CS = carbon steel.
Ga = gauge thickness.
N/A = not applicable.
RC = reinforced concrete.

Table B2-15. Double-Contained Receiver Tanks.

Double-contained receiver tank	Use
200 East Area	
244-A	Cross-site, B Plant, and some evaporator feed transfers. Drain for transfer lines.
244-BX	Receives 241-B and 241-BY Tank Farm salt well liquids.
244-CR TK-003	Receives salt well waste from the 241-C Tank Farm.
200 West Area	
244-S	Receives 241-S and 241-SX Tank Farms salt well waste and miscellaneous plant wastes. Drain for cross-site transfer line. Contains jumpers for Tank 241-SY-102.
244-TX	Receives 241-T Tank Farm salt well waste and miscellaneous Plutonium Finishing Plant wastes. Serves as the Plutonium Finishing Plant transfer line drain.
244-U	Will receive 241-U Tank Farm salt well wastes. Drain for transfer line to 241-SY Tank Farm.

Table B2-16. Tank Waste Remediation System-Owned Inactive Miscellaneous Underground Storage Tanks that are Radioactively Contaminated. (2 sheets)

Tank	Tank type	Tank characteristics		Current status	Operating volume		Sludge volume		Liquid volume		Total volume	
		Construction	Containment		L	gal	L	gal	L	gal	L	gal
200 East Area												
216-BY-201	F	RC	No	No data	42,500	11,200	No data	No data	No data	No data	No data	No data
241-A-302B	C	SU	No	IS	51,103	13,500	No data	No data	No data	No data	13,627	3,600
241-AX-151	DV	No data	No data	No data	No data	No data	No data	No data	No data	No data	No data	No data
241-B-301B	C	RC	No	I	136,275	36,000	81,992	21,660	2,233	590	84,225	22,250
241-B-302B	C	SU	No	I	66,941	17,684	2,612	690	16,050	4,240	18,662	4,930
241-BX-302A	C	SU	No	I	66,941	17,684	3,180	840	0	0	3,180	840
241-BX-302B	C	SU	No	I	43,112	11,389	3,596	950	341	90	3,937	1,040
241-BX-302C	C	SU	No	I	43,070	11,378	2,423	640	871	230	3,293	870
241-C-301C	C	RC	No	I	136,275	36,000	34,069	9,000	5,565	1,470	39,633	10,470
241-ER-311A	C	CS	No	No data	66,941	17,684	No data	No data	No data	No data	No data	No data
244-BXR-001	V	CS	Yes, vault	IS	189,271	50,000	27,255	7,200	0	0	27,255	7,200
244-BXR-002	V	SS	Yes, vault	IS	56,781	15,000	6,814	1,800	1,438	380	8,252	2,180
244-BXR-003	V	SS	Yes, vault	IS	56,781	15,000	5,489	1,450	1,363	360	6,852	1,810
244-BXR-011	V	SS	Yes, vault	IS	189,271	50,000	26,498	7,000	379	100	26,876	7,100
200 West Area												
213-W-TK-1	DC	No data	No data	No data	No data	No data	No data	No data	No data	No data	No data	No data
216-TY-201	F	RC	No	No data	42,500	11,200	No data	No data	No data	No data	No data	No data
231-W-151-001	S	SS	Yes, vault	No data	15,142	4,000	0	0	5,413	1,430	5,413	1,430
231-W-151-002	S	SS	Yes, vault	No data	3,785	1,000	38	10	3,596	950	3,634	960
240-S-302	C	CS	No	AL	66,941	17,684	No data	No data	No data	No data	8,616	2,276
241-S-302A	C	CS	No	AL	66,941	17,684	No data	No data	No data	No data	19,419	5,130
241-S-302B	C	CS	No	I	54,184	14,314	0	0	0	0	0	0
241-SX-302	C	SU	No	I	66,941	17,684	3,975	1,050	1,136	300	5,110	1,350
241-T-301	C	RC*	No	No data	136,275	36,000	81,992	21,660	2,233	590	84,225	22,250
241-TX-302A	C	SU	No	I	66,941	17,684	9,274	2,450	114	30	9,388	2,480
241-TX-302B	C	SU	No	I	66,941	17,684	No data	No data	No data	No data	No data	No data
241-TX-302B(R)	C	SU	No	I	45,425	12,000	No data	No data	No data	No data	No data	No data
241-TX-302X	C	SU	No	I	54,184	14,314	416	110	946	250	1,363	360
241-TY-302A	C	CS	No	I	66,941	17,684	1,703	450	0	0	1,703	450
241-TY-302B	C	CS	No	I	54,184	14,314	0	0	0	0	0	0
241-Z-8	S	SU	No	No data	58,428	15,435	1,893	500	0	0	1,893	500
242-T-135	DC	No data	No data	No data	No data	No data	No data	No data	No data	No data	No data	No data
242-TA-R1	R	No data	No data	No data	No data	No data	No data	No data	No data	No data	No data	No data

Table B2-16. Tank Waste Remediation System-Owned Inactive Miscellaneous Underground Storage Tanks that are Radioactively Contaminated. (2 sheets)

Tank	Tank type	Tank characteristics		Current status	Operating volume		Sludge volume		Liquid volume		Total volume	
		Construction	Containment		L	gal	L	gal	L	gal	L	gal
243-S-TK-1	DC	No data	No data	No data	No data	No data	No data	No data	No data	No data	No data	No data
244-TXR-001	V	SU	Yes, vault	IS	189,276	50,000	8,706	2,300	189	50	8,896	2,350
244-TXR-002	V	SS	Yes, vault	IS	56,781	15,000	11,167	2,950	0	0	11,167	2,950
244-TXR-003	V	SS	Yes, vault	IS	56,781	15,000	24,605	6,500	0	0	24,605	6,500
270-W	N	SU	No	No data	14,309	3,780	No data	No data	No data	No data	No data	No data

Note: Tank identification taken from WHC-SD-WM-PD-046, 1995, Tank Waste Remediation System Inactive Miscellaneous Underground Storage Tanks Program Plan, Rev. 0, Westinghouse Hanford Company, Richland, Washington. Information in this table except tank characteristics and current status is taken from WHC-EP-0681, 1993, Interim Criteria for Organic Watch List Tanks at the Hanford Site, Rev. 0, Westinghouse Hanford Company, Richland, Washington. Tank characteristics are from WHC-SD-EN-ES-040, 1994, Engineering Study of 50 Miscellaneous Inactive Underground Radioactive Waste Tanks Located at the Hanford Site, Rev. 0, Westinghouse Hanford Company, Richland, Washington. Current status is from WHC-SD-EN-ES-040 and HNF-EP-0182, March 31, 1997, Waste Tank Summary Report for Month Ending March 31, 1997, Rev. 108, Fluor Daniel Hanford, Inc., Richland, Washington.

*Reinforced concrete is steel lined.

AL = assumed leaker.
C = catch tank.
CS = carbon steel.
DC = decontamination tank.
DV = diverter station.
F = flush tank.
G = partially grouted.
I = isolated.
IS = interim stabilized.
N = neutralization tank.
R = receiver tank.
RC = reinforced concrete.
S = settling tank.
SS = stainless steel.
SU = steel unspecified.
V = vault tank.

Table B2-17. Tank Waste Remediation System-Owned Active Miscellaneous Underground/Aboveground Storage Tanks Containing Nonradioactive Material. (3 sheets)

Common name	Hanford Site authorized name
200 East Area	
211A	Chemical makeup tank farm, pump house
211B	Cold chemical makeup tank farm
215A	Sodium hydroxide tank farm instrument house
222EC	Laboratory waste tank and emergency generator building
241HN701-66	Vault diesel fuel storage tank
270A	Underground condensate neutralization tank
2607EA	Septic tank
2607EB	Septic tank
2607EC	Septic tank
2607ED	Septic tank
2607EE	Septic tank
2607EF	Septic tank
2607EG	Septic tank
2607EH	Septic tank and drain field Multi-Function Waste Tank Facility
2607EHV	Dosing septic tank structure
2607EK	Septic tank
2607EL	Septic tank
2607EM	Septic tank
2607EN	Septic tank
2607EO	Septic tank
2607EP	Septic tank
2607EQ	Septic tank
2607ER	Septic tank
2607E1	Septic tank
2607E2	Septic tank
2607E3	Septic tank
2607E4	Septic tank
2607E5	Septic tank
2607E6	Septic tank
2607E7	Septic tank
2607E8	Septic tank

Table B2-17. Tank Waste Remediation System-Owned Active Miscellaneous Underground/Aboveground Storage Tanks Containing Nonradioactive Material. (3 sheets)

Common name	Hanford Site authorized name
2607E9	Septic tank
2607E10	Septic tank
2607E11	Septic tank
2607E12	Septic tank
2607E13	Septic tank
2607E14	Septic tank
2607HV	Septic tank and dosing tank
2711E66	Tank, petroleum (waste oil)
2711E66A	Tank, petroleum (waste oil)
2721E66	Tank, petroleum (diesel)
200 West Area	
TR31-ST-T1	Leachate storage tank - Trench 31
TR34-ST-T1	Leachate storage tank - Trench 34
211S	Cold chemical make up tank farm
211T	Cold chemical makeup tank farm
211U	Cold chemical makeup tank farm
211UA	Cold chemical makeup tank farm addition
241S303	Dump waste tank
276U	Solvent recovery tanks
284WA	Salt/brine storage tank
2607WA	Septic tank
2607WB	Septic tank
2607WC	Septic tank
2607WL	Septic tank
2607WN	Septic tank and drain field Multi-Function Waste Tank Facility
2607W1	Septic tank
2607W2	Septic tank
2607W3	Septic tank
2607W4	Septic tank
2607W5	Septic tank
2607W6	Septic tank
2607W7	Septic tank

Table B2-17. Tank Waste Remediation System-Owned Active Miscellaneous Underground/Aboveground Storage Tanks Containing Nonradioactive Material. (3 sheets)

Common name	Hanford Site authorized name
2607W8	Septic tank
2607W9	Septic tank
2607W10	Septic tank
2607W11	Septic tank
2607W12	Septic tank
2607Z	Septic tank
2607Z1	Septic tank
2706T201	Tank, decontamination waste liquid storage
2706T202	Tank, decontamination waste liquid storage

Table B2-18. Summary of 204-AR Waste Unloading Facility Ventilation Systems Equipment.

Facility	Area vented	Stack description			Exhaust fan description		Ventilation systems	
		Number	Height		Number	Design capacity (ft^3/min)*	Equipment	Filtration
			m	ft				
204-AR Waste Unloading Facility	Primary	296-A-26	8.2	27	EF-1	2,000	Moisture separator	PF - 1 HEPAs - 2 in series per bank, 2 banks one on each side of the moisture separator

Source: WHC-SD-WM-ES-291, 1994, Tank Farm Sampling System Configuration and Efficiency Study, Rev. 1, Westinghouse Hanford Company, Richland, Washington.

*To convert ft^3/min to L/s, multiply by 0.472.

HEPA = high-efficiency particulate air (filter).

PF = prefilter.

Table B2-19. Summary of 244-AR Vault Ventilation Systems Equipment (as Designed).

Facility	Area vented	Stack description			Exhaust fan description		Ventilation systems
		Number	Height		Number	Design capacity (ft^3/min)[a]	Filtration
			m	ft			
244-AR Vault	Vessel vent	296-A-12	45.7	150	K4-11-1	950	PF - 1 LEF - 1 per bank HEPAs - 2 in series per bank, 2 banks in parallel
244-AR Vault	Canyon/ cell	296-A-13	18.6	61	K-3-91[b] K-3-92	15,000	HEPAs - 2 in series

Source: WHC-SD-WM-ES-291, 1994, Tank Farm Sampling System Configuration and Efficiency Study, Rev. 1, Westinghouse Hanford Company, Richland, Washington.

[a] To convert ft^3/min to L/s, multiply by 0.472.

[b] Only one fan operates at a time; flow is for each fan.

HEPA = high-efficiency particulate air (filter).

LEF = low-efficiency filter.

PF = prefilter.

Table B2-20. Cribs, Ditches, and Ponds Currently Owned or Operated By Tank Waste Remediation System.

Type	Identification number
200 East Area	
Crib	216-A-8
Crib	216-A-16
Crib	216-A-17
Crib	216-A-23A
Crib	216-A-23B
Crib	216-A-30
Crib	216-A-37-2
Retention basin	216-A-40
Crib	216-A-45
Pond (first expansion pond)	216-B-3A
Pond (second expansion pond)	216-B-3B
Pond (third expansion pond)	216-B-3C
Crib	216-B-55
Crib	216-B-62
Ditch	216-B-63
Crib	216-C-8
200 West Area	
Crib	216-S-3
Crib	216-S-15
Crib	216-S-25
Crib	216-S-26
Ditch	216-T-01
Ditch	216-T-04-02
Ditch	216-U-14
Crib	216-U-17
Crib	216-W-LC
Crib	216-Z-20
Pond	216-Z-21

Table B2-21. Number and Diameter of Vertical Storage Units Associated with Single-Shell Tank Farms.

Tank Farm	Number	Diameter	
		mm	in.
241-S[a]	6	305	12
241-T[b]	6	305	12
241-TY[c]	6	305	12
241-U[a]	6	305	12
241-TX[c]	6	305	12
241-SX[a]	22	305	12
241-SX[a,c]	1	305	12

[a] In process of being closed.
[b] Most are open, not capped.
[c] All backfilled and buried.

Table B2-22. Active 200 East and 200 West Area Transfer Lines. (7 sheets)

Transfer line identification	Notes[a]	Size		Type	Materials	Design pressure (lb/in^2)[b]	Connection facility	Connection facility	Heat trace[c]	Cathodic protection[c]
		mm	in.							
200 East Area active transfer lines										
V244	L1, V1	76	3	Concrete	SSTL A312, 304L	100	221-B	241-ER-152	N	N
V244	L1, V1	76	3	Concrete	SSTL A312, 304L	100	241-ER-153	244-CR Vault	N	N
V244	L1, V1	76	3	Concrete	SSTL A312, 304L	100	241-ER-152	241-ER-153	N	N
4006/4918	L1, V1	102	4	Concrete/double	SSTL, Sch 40	100	244-AR Vault	241-AX-152	N	Y
4503	L1, V1	76-102	3-4	Concrete	Sch 40, SSTL	N/A	241-AX-155	241-AY-101	N	N
4506	L1, V1	76	3	Concrete	Sch 40, SSTL	N/A	241-AX-155	241-AY-102	N	Y
4608	L1, V1	76	3	Concrete	CS	N/A	241-AZ-152	241-AY-101	N	Y
9219[d]	L1, V1	51	2	Direct buried	A53 CS, Sch 40	120	241-ER-152	225-B	N	Y
9220[d]	L1, V1	51	2	Direct buried	A53 CS, Sch 40	120	241-ER-152	225-B	N	Y
9221[d]	L1, V1	51	2	Direct buried	A53 CS, Sch 40	120	241-ER-152	225-B	N	Y
9253[d]	L1, V1	203	8	Direct buried	SSTL A312, 304L	N/A	241-ER-152	225-B	N	Y
9808	L1, V1	76	3	Concrete	Sch 10 SSTL	N/A	241-ER-151	244-BX DCRT	N	N
108/837/8649/8901	L1, V1	51	2	Concrete	Sch 40	N/A	221-B	244-CR DCRT	N	N
4001/T029	L1, V1	76	3	Double	CS A53, Sch 40	400	241-A-B	202-A	N	Y
4508/B105	L1, V1	76-102	3-4	Concrete	ASTM A-312, 304L	N/A	241-AZ-101	241-AX-152	N	Y
4509/4507	L1, V1	102	4	Concrete/double	SSTL	N/A	241-AZ-101	241-AX-155	N	Y
4511/B106	L1, V1	76-102	3-4	Concrete	ASTM A-312, 304L	N/A	241-AZ-102	241-AX-152	N	N
4512/4600	L1, V1	102	4	Concrete	SSTL	N/A	241-AZ-102	241-AX-155	N	N
814/4002/4028/G026	L1, V1	76	3	Concrete	SSTL A312, 304L	100	244-AR Vault	PUREX	N	Y
833/8618/8612	L1, V1	76	3	Concrete	SSTL A312, 304L	100	221-B	244-AR Vault	N	N
834/8615/8653	L1, V1	76	3	Concrete	SSTL A312, 304L	100	221-B	244-AR Vault	N	N
9653/243	L1, V1	76	3	Concrete	Sch 10 SSTL	N/A	221-B	241-ER-151	N	N
A106/4504	L1, V1	102	4	Concrete	SSTL A312, 304L	100	241-AX-152	241-AY-102	N	N
A108/4501	L1, V1	102	4	Concrete	SSTL A312, 304L	100	241-AX-152	241-AY-101	N	N

Table B2-22. Active 200 East and 200 West Area Transfer Lines. (7 sheets)

Transfer line identification	Notes[a]	Size		Type	Materials	Design pressure (lb/in^2)[b]	Connection facility	Connection facility	Heat trace[c]	Cathodic protection[c]
		mm	in.							
200 East Area active transfer lines (cont'd)										
B106/4505	L1, V1	76-102	3-4	Concrete	ASTM A-312, 304L	N/A	241-AX-152	241-AY-102	N	N
B108/4502	L1, V1	76-102	3-4	Concrete	ASTM A-312, 304L	N/A	241-AX-152	241-AY-101	N	N
CDH3018[d]	L1, V1	102	4	Direct buried	A53 CS, Sch 40	120	241-ER-152	225-B	N	Y
D008	L1, V1	76	3	Concrete	SSTL A312, 304L	150	PUREX	241-A-151	N	N
D020	L1, V1	76	3	Concrete	SSTL A312, 304L	150	PUREX	241-A-151	N	N
D040	L1, V1	76	3	Concrete	SSTL A312, 304L	150	PUREX	241-A-151	N	N
D070	L1, V1	76	3	Concrete	SSTL A312, 304L	150	PUREX	241-A-151	N	N
D149	L1, V1	76	3	Concrete	SSTL A312, 304L	150	PUREX	241-A-151	N	N
D186	L1, V1	76	3	Concrete	SSTL A312, 304L	150	PUREX	241-A-151	N	N
E006	L1, V1	76	3	Concrete	SSTL A312, 304L	150	PUREX	241-A-151	N	N
E167	L1, V1	76	3	Concrete	SSTL A312, 304L	150	PUREX	241-A-151	N	N
F241	L1, V1	76	3	Concrete	SSTL A312, 304L	150	PUREX	241-A-151	N	N
F274	L1, V1	76	3	Concrete	SSTL A312, 304L	150	PUREX	241-A-151	N	N
F377	L1, V1	76	3	Concrete	SSTL A312, 304L	150	PUREX	241-A-151	N	N
F429	L1, V1	76	3	Concrete	SSTL A312, 304L	150	PUREX	241-A-151	N	N
F719	L1, V1	76	3	Concrete	SSTL A312, 304L	150	PUREX	241-A-151	N	N
F791	L1, V1	76	3	Concrete	SSTL A312, 304L	150	PUREX	241-A-151	N	N
G057	L1, V1	76	3	Concrete	SSTL A312, 304L	150	PUREX	241-A-151	N	N
G180	L1, V1	51	2	Concrete	SSTL A312, 304L	150	PUREX	241-A-151	N	N
G212	L1, V1	76	3	Concrete	SSTL A312, 304L	150	PUREX	241-A-151	N	N
LIQW702	L1, V1	76	3	Concrete	SSTL A312, 304L	150	204-AR Waste Unloading Facility	241-A-A	N	N
LLW4002[d]	L1, V1	51	2	Direct buried	SSTL A312, 304L	N/A	241-ER-152	225-B	N	Y
LLW4076[d]	L1, V1	51	2	Direct buried	SSTL A312, 304L	N/A	241-ER-152	225-B	N	Y
M044	L1, V1	76	3	Concrete	SSTL A312, 304L	150	PUREX	241-A-151	N	N

Table B2-22. Active 200 East and 200 West Area Transfer Lines. (7 sheets)

Transfer line identification	Notes[a]	Size		Type	Materials	Design pressure (lb/in^2)[b]	Connection facility	Connection facility	Heat trace[c]	Cathodic protection[c]
		mm	in.							
200 East Area active transfer lines (cont'd)										
M045	L1, V1	76	3	Concrete	SSTL A312, 304L	150	PUREX	241-A-151	N	N
R165	L1, V1	51	2	Concrete	SSTL A312, 304L	150	PUREX	241-A-151	N	N
R345	L1, V1	76	3	Concrete	SSTL A312, 304L	150	PUREX	241-A-151	N	N
SL100	L1, V1	51	2	Double	CS A53, Sch 40	400	241-AX-B	241-A-B	N	Y
SL101	L1, V1	51	2	Double	CS A53, Sch 40	400	241-AX-A	241-A-A	N	Y
SL160	L1, V1	51	2	Double	CS ASTM A53	400	241-AN-B	241-AZ-102	N	Y
SL167	L1, V1	51	2	Double	CS A53, Sch 40	400	242-A Evaporator	241-AW-B	N	Y
SL168	L1, V1	51	2	Double	CS A53, Sch 40	400	242-A Evaporator	241-AW-A	N	Y
SL500	L1, V1	51	2	Double	CS A53, Sch 40	400	AZ-102	241-AX-A	N	Y
SL502	L1, V1	51	2	Double	Sch 40, CS	N/A	241-AX-B	241-AY-102	N	Y
SL509	L1, V1	51	2	Double	CS A53, Sch 40	400	241-AW-B	241-AP VP	N	Y
SL510	L1, V1	51	2	Double	CS A53, Sch 40	400	241-AW-A	241-AP VP	N	Y
SN200	L1, V1	32	1.25	Concrete	CS A53, Sch 40	400	244-BX DCRT	241-BY-102	N	Y
SN201	L1, V1	32	1.25	Concrete	CS A53, Sch 40	400	244-BX DCRT	241-BY-103	N	Y
SN202	L1, V1	32	1.25	Concrete	CS A53, Sch 40	400	244-BX DCRT	241-BY-105	N	Y
SN203	L1, V1	32	1.25	Concrete	CS A53, Sch 40	400	244-BX DCRT	241-BY-106	N	Y
SN200SN213	L1, V1	76	3	Double	CS A53, Sch 40	400	241-AX-B	241-A-B	N	Y
SN201/SN214	L1, V1	76	3	Double	CS A53, Sch 40	400	241-AX-A	241-A-A	N	Y
SN207	L1, V1	32	1.25	Concrete	CS A53, Sch 40	400	244-BX DCRT	241-BY-109	N	Y
SN208	L1, V1	32	1.25	Concrete	CS A53, Sch 40	400	244-BX DCRT	241-BY-101	N	Y
SN208	L1, V1	32	1.25	Concrete	CS A53, Sch 40	400	244-BX DCRT	241-BY-104	N	Y
SN208	L1, V1	32	1.25	Concrete	CS A53, Sch 40	400	244-BX DCRT	241-BY-110	N	Y
SN215	L1, V1	76	3	Concrete/double	CS A53, Sch 40	400	244-A DCRT	241-A-A	N	Y
SN216	L1, V1	76	3	Concrete/double	CS A53, Sch 40	400	244-A DCRT	241-A-B	N	Y

Table B2-22. Active 200 East and 200 West Area Transfer Lines. (7 sheets)

Transfer line identification	Notes[a]	Size		Type	Materials	Design pressure (lb/in^2)[b]	Connection facility	Connection facility	Heat trace[c]	Cathodic protection[c]
		mm	in.							
200 East Area active transfer lines (cont'd)										
SN219	L1, V1	76	3	Double	CS A53, Sch 40	400	241-A-B	241-AW-B	N	Y
SN220	L1, V1	76	3	Double	CS A53, Sch 40	400	241-A-A	241-AW-A	N	Y
SN232	L1, V1	76	3	Double	CS A53, Sch 40	400	244-A DCRT	241-ER-153	N	Y
SN233	L1, V1	76	3	Double	CS A53, Sch 40	400	244-A DCRT	241-ER-153	N	Y
SN234	L1, V1	76	3	Double	CS A53, Sch 40	400	244-A DCRT	241-ER-153	N	Y
SN244[e]	L1, V1	76	3	Concrete	SSTL A312, 304L	100	244-CR Vault	241-ER-153	N	Y
SN247	L1, V1	51	2	Concrete	CS	N/A	241-AN-101	241-AX-B	N	Y
SN260	L1, V1	51	2	Double	CS A53, Sch 40	400	241-AN-B	241-AZ-102	N	Y
SN269	L1, V1	76	3	Double	CS A53, Sch 40	400	242-A Evaporator	241-AW-102	N	Y
SN270	L1, V1	76	3	Double	CS A53, Sch 40	400	242-A Evaporator	241-AW-102	N	Y
SN600	L1, V1	51	2	Double	Sch 40, CS	N/A	241-AZ-102	241-AX-A	N	Y
SN609	L1, V1	76	3	Double	CS A53, Sch 40	400	241-AW-102	241-AP	N	Y
SN610	L1, V1	76	3	Double	CS A53, Sch 40	400	241-AW-102	241-AP	N	Y
U039	L1, V1	51	2	Concrete	SSTL A312, 304L	150	PUREX	241-A-151	N	N
U136	L1, V1	51	2	Concrete	SSTL A312, 304L	150	PUREX	241-A-151	N	N
V021	L1, V1	76	3	Concrete/double	SSTL A312, Sch 40	150	241-A-151	241-AW-A	N	Y
V022	L1, V1	76	3	Concrete/double	SSTL A312, Sch 40	150	241-A-151	241-AW-B	N	Y
V023	L1, V1	76	3	Concrete/double	SSTL A312, Sch 40	150	241-A-151	241-AW-B	N	Y
4029/4004/G341	L1, V1	76	3	Concrete/double	CS A53, Sch 40	400	202-A	241-A-A	N	Y
V228	L1, V1	76	3	Concrete	11 Ga 18-8 SSTL	120	241-ER-151	241-ER-153	N	N
V229	L1, V1	76	3	Double	CS A53	120	241-ER-151	241-ER-152	N	N
V360	L1, V	76	3	Concrete	11 Ga 18-8 SSTL	120	241-EW-151	241-ER-151	N	N
V361	L1, V	76	3	Concrete	11 Ga 18-8 SSTL	120	241-EW-151	241-ER-151	N	N
V362	L1, V	76	3	Concrete	11 Ga 18-8 SSTL	120	241-EW-151	241-ER-151	N	N

Table B2-22. Active 200 East and 200 West Area Transfer Lines. (7 sheets)

Transfer line identification	Notes[a]	Size		Type	Materials	Design pressure (lb/in^2)[b]	Connection facility	Connection facility	Heat trace[c]	Cathodic protection[c]
		mm	in.							
200 East Area active transfer lines (cont'd)										
V363	L1, V	76	3	Concrete	11 Ga 18-8 SSTL	120	241-EW-151	241-ER-151	N	N
V364	L1, V	76	3	Concrete	11 Ga 18-8 SSTL	120	241-EW-151	241-ER-151	N	N
V366	L1, V	76	3	Concrete	11 Ga 18-8 SSTL	120	241-EW-151	241-ER-151	N	N
V714	L1, V1	76	3	Double	Sch 40, SSTL	N/A	241-AX-155	241-AR-151	N	Y
V714	L1, V1	76	3	Double	SSTL A312, 304L	150	PUREX	241-AR-151	N	Y
V719	L1, V1	76	3	Double	SSTL	N/A	241-AZ-152	241-AX-155	N	Y
V720	L1, V1	76	3	Double	CS A53, Sch 40	400	241-AR-151	241-AY-102	N	Y
V8912[d]	L1, V1	51	2	Direct buried	A53 CS, Sch 40	120	241-ER-152	225-B	N	Y
WRSS	L1, V2	102	4	Double	304L SS inner Sch 40 CS outer	320	241-C-106	241-AY-102	N	Y
200 West Area active transfer lines										
202	L1, V1	51	2	Double	SSTL 40S	300	241-Z (P-D-5-1)	244-TX DCRT	N	Y
203	L1, V1	51	2	Double	SSTL 40S	300	241-Z (P-D-5-1)	244-TX DCRT	N	Y
V398	L1, V1	76	3	Concrete/double	CS A53 Sch 40	60	241-TX-152	241-U152	N	Y
V404	L1, V1	76	3	Concrete/double	CS A53 Sch 40	60	241-TX-152	241-U152	N	Y
SN6012	L1, V1	51	2	Direct buried concrete	CS A53, Sch 40	400	244-TX DCRT	241-T-104	N	N
7624	L1, V1	51	2	Direct buried concrete	CS A53, Sch 40	400	244-TX DCRT	241-T-110	N	N
SL118	L1, V1	N/A	N/A	Direct buried	N/A	N/A	241-S-D	241-SX-B	N	N
SN216/SN282	L, V1	76	3	Double	CS A53, Sch 40	400	244-U DCRT	241-SY-B	N	Y
SN245	L, V1	25	1	Concrete	CS A53 Sch 40	400	244-S DCRT	241-S-107	N	N
SN246	L, V1	25	1	Concrete	CS A53 Sch 40	400	244-S DCRT	241-S-107	N	N
SN247	L, V1	25	1	Concrete	CS A53 Sch 40	400	244-S DCRT	241-S-107	N	Y
SN248	L, V1	25	1	Concrete	CS A53 Sch 40	400	244-S DCRT	241-S-107	N	N
SN249	L, V1	25	1	Concrete	CS A53 Sch 40	400	244-S DCRT	241-S-107	N	Y
SN275[e]	L, V1	76	3	Double	CS A53 Sch 40	400	241-SY-A	241-S-A	N	Y

Table B2-22. Active 200 East and 200 West Area Transfer Lines. (7 sheets)

Transfer line identification	Notes[a]	Size		Type	Materials	Design pressure (lb/in^2)[b]	Connection facility	Connection facility	Heat trace[c]	Cathodic protection[c]
		mm	in.							
200 West Area active transfer lines (cont'd)										
SN276[e]	L, V1	76	3	Double	CS Sch 40	400[d]	241-SY-B	241-S-B	N	Y
SN283	L, V1	76	3	Double	CS A53, Sch 40	400	242-S Evaporator	241-SY-102	N	Y
SN7624	L, V1	51	2	Concrete	CS A53, Sch 40	400	244-TX DCRT	241-T-110	N	Y
SNL 3150	L, V2	76	3	Double	SSTL 304L, Sch 40	1430	241-SY-A	244-A	N	N
SNL 5350	L1, V1	76	3	Double	Fibercast Dualcast 3 mm (0.120 in.) thick	125	219-S Building	244-S DCRT	N	N
V360	L, V	76	3	Concrete	11 Ga 18-8 SSTL	120	241-UX-154	241-EW-151	N	Y
V361	L, V	76	3	Concrete	11 Ga 18-8 SSTL	120	241-UX-154	241-EW-151	N	Y
V362	L, V	76	3	Concrete	11 Ga 18-8 SSTL	120	241-UX-154	241-EW-151	N	Y
V363	L, V	76	3	Concrete	11 Ga 18-8 SSTL	120	241-UX-154	241-EW-151	N	Y
V364	L, V	76	3	Concrete	11 Ga 18-8 SSTL	120	241-UX-154	241-EW-151	N	Y
V366	L, V	76	3	Concrete	11 Ga 18-8 SSTL	120	241-UX-154	241-EW-151	N	Y
V374	L2, V2	76	3	Concrete	11 Ga 18-8 SSTL	120	221-U	241-UX-154	N	N
V387	L, V1	89	3.5	Concrete	11 Ga 18-8 SSTL	120	241-TX-154	241-TX-152-DB	N	Y
V388	L, V1	89	3.5	Concrete	11 Ga 18-8 SSTL	120	241-TX-154	241-TX-152-DB	N	Y
V402	L, V1	76	3	Concrete/double	CS A53 Sch 40	400	244-TX DCRT	241-TX-152	N	Y
V406	L, V1	76	3	Concrete/double	CS A53 Sch 40	400	244-TX DCRT	241-TX-152	N	Y
V453/V421	L, V1	76	3	Concrete	11 Ga 18-8 SSTL	N/A	241-U-152	241-U-151	N	N
V455	L, V1	76	3	Double	11 Ga 18-8 SSTL	N/A	241-S-151	241-U-151	N	Y
V456	L3, V1	89	3.5	Concrete/double	CS A53 Sch 40	400	244-S DCRT	241-U-151	N	Y
V503/4700	L4, V1	89	3.5	Concrete/double	SSTL Sch 40S	250	241-S-151	241-UX-154	N	Y
V505/5701	L, V1	76	3	Concrete	SSTL, Sch 10	N/A	241-UX-154	241-S-151	N	Y
V517	L, V1	89	3.5	Concrete	SSTL	N/A	202-S	241-S-151	N	N
V522	L, V1	76	3	Double	CS A53 Sch 40	400	244-S DCRT	241-S-151	N	Y
V560	L, V1	76	3	Double	CS A53 Sch 40	400	244-S DCRT	241-S-151	N	Y

Table B2-22. Active 200 East and 200 West Area Transfer Lines. (7 sheets)

Transfer line identification	Notes[a]	Size		Type	Materials	Design pressure (lb/in^2)[b]	Connection facility	Connection facility	Heat trace[c]	Cathodic protection[c]
		mm	in.							
200 West Area active transfer lines (cont'd)										
V561	L, V1	76	3	Double	CS A53 Sch 40	400	244-S DCRT	241-SY-B	N	Y
V562	L, V1	76	3	Double	CS A53 Sch 40	400	241-SY-A	244-S DCRT	N	Y
V657	L2, V1	76	3	Direct buried	SSTL	N/A	241-T-151	241-T-153	N	N
V658	L2, V1	76	3	Direct buried	SSTL	N/A	241-T-151	241-T-153	N	N
V730	L, V1	89	3.5	Concrete	11 Ga 18-8 SSTL	120	221-T	241-TX-154	N	N
V732	L, V1	89	3.5	Concrete	11 Ga 18-8 SSTL	120	221-T	241-TX-154	N	N
V734	L, V1	89	3.5	Concrete	11 Ga 18-8 SSTL	120	221-T	241-TX-154	N	N
V735	L, V1	89	3.5	Concrete	11 Ga 18-8 SSTL	120	221-T	241-TX-154	N	N
V737	L, V1	89	3.5	Concrete	11 Ga 18-8 SSTL	120	221-T	241-TX-154	N	N
V738	L, V1	89	3.5	Concrete	11 Ga 18-8 SSTL	120	221-T	241-TX-154	N	N

Source: WHC-SD-WM-HIE-007, 1996, Tank Waste Remediation System FSAR Hazard Identification/Facility Configuration Verification Report, Rev. 0, Westinghouse Hanford Company, Richland, Washington.

[a] In the notes column:
L = leak detection, unspecified
L1 = low point leak detection
L2 = no leak detection
L3 = leak detection probe
L4 = leak detection by smears
V = ventilation system, unspecified
V1 = ventilation provided by tanks
V2 = no ventilation provided

[b] To convert lb/in^2 to Pa multiply by 6,894.8.

[c] In the heat trace and cathodic protection columns:
N = no
Y = yes

[d] Could not verify

[e] Temporary blank

ASTM = American Society for Testing and Materials
CS = carbon steel
DCRT = double-contained receiver tank
Ga = gauge
N/A = not available
PUREX = Plutonium Uranium Extraction (Facility)
SSTL = stainless steel
VP = valve pit

Table B2-23. Inactive Transfer Lines. (9 Sheets)

Transfer line identifier	Connection facility	Connection facility	Comments
200 East Area inactive transfer lines			
4001	241-AX-151	N/A	Cut and capped
4002	241-AX-151	N/A	Cut and capped
4003	241-AX-151	N/A	Cut and capped
4004	241-AX-151	N/A	Cut and capped
4006	241-AX-151	N/A	Cut and capped
4007	244-AR Vault	241-AX-151	Isolation blank
4009	241-AX-151	N/A	Cut and capped
4012	241-CR-153	241-AX-151	Facility isolated
4014	241-AX-151	N/A	Cut and capped
4017	241-AX-151	N/A	Cut and capped
4018	241-AX-151	N/A	Cut and capped
4019	241-AX-151	N/A	Cut and capped
4020	241-AX-151	N/A	Cut and capped
4021	241-AX-151	241-AY-151	Facility isolated
4021	241-AY-151	241-AX-152	Facility isolated
4022	241-AX-151	241-AX-152	Facility isolated
4530	241-AY-151	241-A-153	Facility isolated
6249	241-BYR-152	241-BXR-152	Facility isolated
6449	241-BYR-153	241-BXR-153	Facility isolated
7412	241-BYR-154	241-BXR-151	Facility isolated
7425	241-BYR-154	241-BXR-151	Facility isolated
8021	241-AY-152	241-AX-103	Facility isolated
8022	241-AY-152	241-AX-103	Facility isolated
8023	241-AY-152	241-AX-102	Facility isolated
8024	241-AY-152	241-AX-102	Facility isolated
8025	241-AY-152	241-AX-101	Facility isolated
8026	241-AY-152	241-AX-101	Facility isolated
8027	241-AY-152	241-AX-104	Facility isolated
8028	241-AY-152	241-AX-104	Facility isolated
8061	241-AY-152	241-AX-104	Facility isolated
8063	241-AY-152	241-AX-101	Facility isolated

Table B2-23. Inactive Transfer Lines. (9 Sheets)

Transfer line identifier	Connection facility	Connection facility	Comments
200 East Area inactive transfer lines (cont'd)			
8064	241-AY-152	241-AX-103	Facility isolated
8064	241-AY-152	241-AX-102	Facility isolated
8555	241-CR-151	N/A	Cut and capped
8656	241-AX-151	244-CR DCRT	Facility isolated
9012	241-BXR-151	241-BR-152	Facility isolated
9025	241-BXR-151	241-BR-152	Facility isolated
9212	241-BYR-152	241-BXR-151	Facility isolated
9212	241-BYR-152	241-BXR-152	Facility isolated
9225	241-BYR-152	241-BXR-151	Facility isolated
9225	241-BYR-152	241-BXR-152	Facility isolated
9249	241-BYR-152	241-BXR-152	Facility isolated
9412	241-BYR-153	241-BXR-151	Facility isolated
9425	241-BYR-153	241-BXR-151	Facility isolated
9425	241-BYR-153	241-BXR-153	Facility isolated
9449	241-BYR-153	241-BXR-153	Facility isolated
9623	241-BYR-154	241-BXR-151	Facility isolated
9624	241-BXR-151	241-BR-152	Facility isolated
9626	241-BYR-153	241-BXR-151	Facility isolated
9626	241-BYR-153	241-BXR-153	Facility isolated
9630	241-BXR-151	241-BR-152	Facility isolated
9631	241-BYR-152	241-BXR-152	Facility isolated
9631	241-BYR-152	241-BXR-151	Facility isolated
9632	241-BYR-153	241-BXR-151	Facility isolated
9632	241-BYR-153	241-BXR-153	Facility isolated
9633	241-BYR-154	241-BXR-151	Facility isolated
9633	241-BYR-154	241-BXR-151	Facility isolated
9633	241-BYR-154	241-BXR-151	Facility isolated
9633	241-BYR-154	241-BXR-151	Facility isolated
9633	241-BYR-154	241-BXR-151	Facility isolated
9636	241-BXR-151	241-B-252	Facility isolated
9644	241-BXR-151	N/A	Facility isolated

Table B2-23. Inactive Transfer Lines. (9 Sheets)

Transfer line identifier	Connection facility	Connection facility	Comments
200 East Area inactive transfer lines (cont'd)			
9644	241-BXR-151	N/A	Facility isolated
9644	241-BXR-151	N/A	Facility isolated
9719	241-BXR-151	241-ER-151	Facility isolated
4005/810	241-AX-151	244-AR Vault	Facility isolated
4107V0331	241-AX-151	241-A-152	Facility isolated
6307/V336	241-BYR-152	241-BX-153	Facility isolated
7435/9365/V304	241-BYR-154	241-B-252	Facility isolated
7507/9712	241-BYR-154	B-SWAMP	Facility isolated
814/4015	241-AX-151	N/A	Cut and capped
8653/8618	241-ER-151	241-CR-151	Facility isolated
9625/9212	241-BYR-152	241-BXR-151	Facility isolated
9625/9212	241-BYR-152	241-BXR-152	Facility isolated
9653/141	221-B	N/A	Cut and capped
A4013	241-CR-152	241-AX-151	Facility isolated
D601D505	241-AZ-152	241-AY-152	Facility isolated
S601/S517	241-AZ-152	241-AY-152	Facility isolated
S602	241-AZ-152	N/A	Cut and capped
S604	241-AZ-152	N/A	Cut and capped
S606	241-AZ-152	N/A	Cut and capped
S610	241-AZ-152	N/A	Cut and capped
SN650	241-A-B	241-AP-102	Capped
V-341	241-BX-154	221-B	Facility isolated
V004	241-A-152	241-A-151	Facility isolated
V005	241-A-152	241-A-151	Facility isolated
V006	241-A-152	241-A-151	Facility isolated
V006	241-A-152	241-A-151	Facility isolated
V006	241-A-152	241-A-151	Facility isolated
V006	241-A-152	241-A-151	Facility isolated
V007	241-A-152	241-A-151	Facility isolated
V007	241-A-152	241-A-151	Facility isolated
V007	241-A-152	241-A-151	Facility isolated

Table B2-23. Inactive Transfer Lines. (9 Sheets)

Transfer line identifier	Connection facility	Connection facility	Comments
200 East Area inactive transfer lines (cont'd)			
V050	241-A-152	241-C-104	Facility isolated
V051	241-A-152	241-C-104	Facility isolated
V1000	241-CR-152	244-CR Vault	Facility isolated
V101	241-C-153	N/A	Cut and capped
V108/812	241-C-151	244-AR Vault	Facility isolated
V109	241-C-151	241-A-101	Facility isolated
V110	241-C-151	244-CR Vault	Facility isolated
V113	241-C-151	241-AX-101	Facility isolated
V113	241-C-151	241-AX-103	Facility isolated
V121	241-C-152	N/A	Cut and capped
V136	241-C-153	N/A	Cut and capped
V137	241-C-153	N/A	Cut and capped
V141	241-C-153	N/A	Cut and capped
V142	241-C-153	N/A	Cut and capped
V147	241-C-153	N/A	Cut and capped
V200	241-B-154	221-B	Facility isolated
V2000	241-BXR-152	241-BX-155	Facility isolated
V2001	241-BX-155	241-BR-152	Facility isolated
V210V111	241-B-154	241-C-151	Facility isolated
V214/8902	241-B-154	221-B	Facility isolated
V225	241-B-151	241-ER-151	Facility isolated
V228	241-CR-153	241-ER-153	Facility isolated
V235	241-BX-153	241-B-151	Facility isolated
V236	241-BX-153	241-B-151	Facility isolated
V237	241-B-151	241-BX-101	Facility isolated
V242	241-BX-153	241-B-152	Facility isolated
V252	241-BX-153	241-B-152	Facility isolated
V253	241-BX-153	241-B-152	Facility isolated
V285	241-BX-154	241-B-252	Facility isolated
V305	241-B-252	241-BY-109	Facility isolated
V310	241-B-154	241-C-152	Facility isolated

Table B2-23. Inactive Transfer Lines. (9 Sheets)

Transfer line identifier	Connection facility	Connection facility	Comments
200 East Area inactive transfer lines (cont'd)			
V313	242-B-151	242-B Evaporator	Cut and capped
V314	241-BX-155	241-B-151	Facility isolated
V314	242-B-151	242-B Evaporator	Cut and capped
V319	241-BX-155	241-B-152	Facility isolated
V329	241-B-154	221-B	Facility isolated
V330	241-B-154	221-B	Facility isolated
V331	241-B-154	221-B	Facility isolated
V332	241-B-154	221-B	Facility isolated
V333	241-B-154	221-B	Facility isolated
V334	241-B-154	221-B	Facility isolated
V335	241-BX-154	221-B	Facility isolated
V336	241-BX-154	221-B	Facility isolated
V337	241-BX-154	221-B	Facility isolated
V339	241-BX-154	221-B	Facility isolated
V340	241-BX-154	221-B	Facility isolated
V342	241-BX-154	221-B	Facility isolated
V716	241-AR-151	244-AR Vault	Facility isolated
V718/817	241-AR-151	244-AR Vault	Facility isolated
V743	221-B	241-C-154	Facility isolated
200 West Area inactive transfer lines			
1006	205-S	240-S-152	Facility inactive
1115	240-S-151	202-S	Isolation blank
1140	240-S-151	202-S	Isolation blank
1145	240-S-151	202-S	Isolation blank
1236	240-S-151	202-S	Isolation blank
1540	240-S-151	202-S	Isolation blank
1541	240-S-151	202-S	Isolation blank
3130	240-S-151	202-S	Isolation blank
3591	240-S-151	202-S	Isolation blank
3592	240-S-151	202-S	Isolation blank
3603	240-S-151	None	Isolation blank

Table B2-23. Inactive Transfer Lines. (9 Sheets)

Transfer line identifier	Connection facility	Connection facility	Comments
200 West Area inactive transfer lines (cont'd)			
3610	240-S-151	202-S	Isolation blank
3635	240-S-151	202-S	Isolation blank
3658	240-S-151	202-S	Isolation blank
3666	240-S-151	202-S	Isolation blank
4242	240-S-151	202-S	Isolation blank
4851	241-TX-155	241-UX-154	Facility isolated
5012	241-UR-152	241-UR-151	Facility isolated
5025	241-UR-152	241-UR-151	Facility isolated
5225	241-UR-151	241-UR-153	Facility isolated
5412	241-UR-151	241-UR-154	Facility isolated
5425	241-UR-151	241-UR-154	Facility isolated
5624	241-UR-152	241-UR-151	Facility isolated
5626	241-UR-151	241-UR-154	Facility isolated
5630	241-UR-152	241-UR-151	Facility isolated
5632	241-UR-151	241-UR-154	Facility isolated
4859/4703	241-TX-155	241-UX-154	Facility isolated
No number	242-S Evaporator	241-S-103	Process blank
No number	242-S Evaporator	241-S-103	Process blank
No number	241-UA	241-UB	Cut and capped
No number	241-UA	241-UB	Cut and capped
No number	240-S-152	204-S	Decommissioned
SL100	241-UC	241-S-152	Facility isolated
SL101	241-UD	Blocked	Pipeline blocked
SL101	241-S-152	Blocked	Line blocked
SL113	242-S Evaporator	N/A	Failed pipeline
SL114	242-S Evaporator	N/A	Failed pipeline
SL115	241-S-A	241-S-C	Failed pipeline
SL117	241-S-C	241-SX-A	Process blank
SL126	241-S-D	N/A	Cut and capped
SL138	241-S-152	242-S Evaporator	Facility isolated
SL139	241-S-152	Blocked	Pipeline blocked

Table B2-23. Inactive Transfer Lines. (9 Sheets)

Transfer line identifier	Connection facility	Connection facility	Comments
200 West Area inactive transfer lines (cont'd)			
SL139/SL114	242-S Evaporator	241-S-B	Process blank
SL175	241-SY-A	241-S-152	Facility isolated
SL176	241-SY-B	241-S-152	Facility isolated
SM264	244-U DCRT	241-UD	244-U DCRT is inactive
SN-204	244-TX DCRT	241-TX-17A	Isolation blank
SN-216	241-UD	Blocked	Line blocked
SN200	244-TX DCRT	N/A	Isolation Blank
SN202	241-UA	241-UC	Cut and capped
SN203	241-UB	241-UD	Cut and capped
SN208	244-TX DCRT	241-TX-11A	Isolation blank
SN211	244-TX DCRT	N/A	Isolation blank
SN216/SN282	244-U DCRT	241-SY-B	Process blank
SN217	241-S-C	241-SX-A	Process blank
SN218	241-S-D	241-SX-B	Process blank
SN249/704	244-TX DCRT	241-TY-103	Isolation blank
SN266	244-U DCRT	N/A	Line blocked
V360	241-WR	241-UX-154	Facility isolated
V375	241-TX-155	241-UX-154	Facility isolated
V376	241-TX-155	241-UX-154	Facility isolated
V382	241-TX-155	241-UX-154	Facility isolated
V399	241-T-152	241-TX-155	Facility isolated
V405	241-T-152	241-TX-155	Facility isolated
V405	241-TX-155	241-T-152	Facility isolated
V410	241-U-151	241-TX-155	Facility isolated
V411	241-T-151	241-TX-155	Facility isolated
V412	241-TX-155	Blocked	Facility isolated
V416	241-TX-153	241-U-152	Facility isolated
V426	241-U-152	241-U-153	Facility isolated
V427	241-U-152	241-U-153	Facility isolated
V428/V461	241-U-152	241-U-153	Facility isolated

Table B2-23. Inactive Transfer Lines. (9 Sheets)

Transfer line identifier	Connection facility	Connection facility	Comments
200 West Area inactive transfer lines (cont'd)			
V445	241-T-151	241-U-151	Facility isolated
V450	241-U-151	241-U-153	Facility isolated
V456	241-SX-152	N/A	Cut and capped
V458	241-U-153	240-S-151	Facility isolated
V459	241-U-153	240-S-151	Facility isolated
V460	241-U-153	240-S-151	Facility isolated
V465	241-U-153	241-U-110	Facility isolated
V466	241-U-153	241-U-110	Facility isolated
V467	241-U-153	241-U-110	Facility isolated
V470	241-U-153	241-U-107	Facility isolated
V471	241-U-153	241-U-107	Facility isolated
V471	241-U-153	241-U-107	Facility isolated
V472	241-U-153	241-U-107	Facility isolated
V472	241-U-153	241-U-107	Facility isolated
V526	241-S-155	241-SX-151	Facility isolated
V527	241-S-155	241-SX-151	Facility isolated
V528	241-S-155	241-SX-151	Facility isolated
V529	241-S-151	241-SX-151	Facility isolated
V530	241-S-151	241-SX-151	Facility isolated
V597	241-TY-153	241-TX-153	Facility isolated
V6002	241-TR-152	241-T-103	N/A
V6006	241-TR-152	241-T-102	N/A
V601	241-T-152	241-TX-153	Facility isolated
V6010	241-TR-152	241-T-101	N/A
V610	241-TX-153	242-T Evaporator	Facility isolated
V653	241-T-151	221-T	Facility isolated
V654	241-T-151	221-T	Facility isolated
V657	241-T-153	241-T-151	Facility isolated
V658	241-T-153	241-T-151	Facility isolated
V667	241-T-152	221-T	Facility isolated
V668	241-T-152	221-T	Facility isolated

Table B2-23. Inactive Transfer Lines. (9 Sheets)

Transfer line identifier	Connection facility	Connection facility	Comments
200 West Area inactive transfer lines (cont'd)			
V669	241-T-152	221-T	Facility isolated
V671	241-T-152	224-T	Facility isolated
V675	241-T-153	241-T-152	Facility isolated
V676	241-T-153	241-T-152	Facility isolated
V707	241-T-252	221-T	Facility isolated
V762/4853	241-SX-152	241-UX-154	Facility isolated

Source: WHC-SD-WM-HIE-007, 1996, Tank Waste Remediation System FSAR Hazard Identification/Facility Configuration Verification Report, Rev. 0, Westinghouse Hanford Company, Richland, Washington.
DCRT = double-contained receiver tank
N/A = not available

Table B2-24. Typical Primary and Supporting Activities at Tank Waste Remediation System Facilities Required to Support Operations. (2 sheets)

Activity	Waste storage/ concentration	Waste transfer	Waste characterization
Primary activities to support operations			
Air lance	X		
Air lift circulators	X		X
Ammonia gas sampling	X		
Auger sampling	X		X
Cathodic protection		X	
Chemical additions	X	X	
Core sampling - push and rotary modes [a]	X		X
Gas vapor sampling - in-tank	X		X
HEPA filter change out	X		
Infrared scanning	X		
Interim stabilization or salt well pumping	X		
Intrusion prevention	X		
Lighting augmentation	X	X	X
Line integrity assessments		X	
Liquid-level monitoring	X	X	X
Liquid observation wells	X		
Liquid (grab) sampling	X	X	X
Photography (in-tank or pit)	X	X	
Raw and treated water additions	X	X	
Salt well screen	X	X	
Sample handling	X	X	X
Sludge-level monitoring	X		X
Sludge sampling	X		X
Slurry distributor	X		
Specific gravity probe monitoring	X	X	X
Thermocouple or multiple instrument tree	X		
Utility additions or upgrades	X	X	
Valve positioning and jumper installation		X	
Waste minimization activities	X		

Table B2-24. Typical Primary and Supporting Activities at Tank Waste Remediation System Facilities Required to Support Operations. (2 sheets)

Activity	Waste storage/ concentration	Waste transfer	Waste characterization
Waste transfer leak detection (swabbing or surveillance camera)		X	
Supporting activities			
Cover block installation and removal	X	X	X
Crane operations	X	X	X
Decontamination activities	X	X	X
Dry well scanning	X		
Electrical grounding and bonding	X	X	X
Flammable gas monitoring (sniffing)[b]	X	X	X
Greenhouse or confinement construction, decontamination, and removal	X	X	X
Groundwater monitoring	X		
In-tank equipment installation, operation, and removal	X	X	X
Radiological monitoring and surveys	X	X	X
Riser access	X	X	X
Vehicle operations	X	X	X

[a] With the exception of flammable gas hazards, rotary mode core sampling is outside the scope of this Basis for Interim Operation; see WHC-SD-WM-SAD-035, 1996, A Safety Assessment for Rotary Mode Core Sampling in Flammable Gas Single-Shell Tanks, Hanford Site, Richland, Washington, Rev. 0a, Westinghouse Hanford Company, Richland, Washington.

[b] Using portable monitors

HEPA = high-efficiency particulate air (filter)

Table B2-25. Tank Farm Radionuclide Monitoring Systems by Facility and Stack Number. (2 sheets)

Facility	Area monitored	Stack description number	Monitor description	
			Type	Material
Single-shell tanks				
241-C-105/106	Portable	296-P-16	CAM	Beta-gamma
241-C-106	Primary (WRSS operations	296-C-006	CAM	Beta-gamma
241-SX	Primary	296-S-15	CAM	Beta-gamma
Double-shell tanks				
241-SY	Annulus	296-P-22	CAM	Beta-gamma
241-SY	Primary	296-P-23	CAM	Beta-gamma
241-SY	Primary backup	296-P-28	CAM (2)	Beta-gamma
241-AY/AZ	241-A-702 Primary ventilation		CAM	
241-AY/AZ	241-A-702 Isolated	296-A-17	SZC (2) Tritium (3)* C-14 (2)* CAM	Beta-gamma
241-AY/AZ	241-A-702 Isolated	296-P-26	CAM	Beta-gamma
241-AY-101	Annulus	296-A-18	CAM	Beta-gamma
241-AY-102	Annulus	296-A-19	CAM	Beta-gamma
241-AZ	Annulus	296-A-20	CAM	Beta-gamma
241-AW	Primary	296-A-27	SZC (2) CAM	Beta-gamma
241-AW	Annulus	296-A-28	CAM	Beta-gamma
241-AN	Primary	296-A-29	CAM	Beta-gamma
241-AN	Annulus	296-A-30	CAM	Beta-gamma
241-AP	Primary	296-A-40	SZC (2) CAM	Beta-gamma
241-AP	Annulus	296-A-41	CAM	Beta-gamma
Double-contained receiver tanks				
200 East Area				
244-A	Primary/annulus	296-A-25	CAM	Beta-gamma
244-BX DCRT	Primary/annulus	296-B-28	CAM	Beta-gamma
244-CR Vault	Primary	296-C-5	CAM	Beta-gamma

Table B2-25. Tank Farm Radionuclide Monitoring Systems by Facility and Stack Number. (2 sheets)

Facility	Area monitored	Stack description number	Monitor description	
			Type	Material
200 West Area				
244-S	Primary/annulus	296-S-22	CAM (2)	Alpha Beta-gamma
244-TX	Primary/annulus	296-T-18	CAM (2)	Alpha Beta-gamma
Other facilities				
204-AR	Primary	296-A-26	CAM	Beta-gamma

Source: WHC-SD-WM-ES-291, 1994, Tank Farm Sampling System Configuration and Efficiency Study, Rev. 1, Westinghouse Hanford Company, Richland, Washington.
*System is inactive.
CAM = continuous air monitor.
DCRT = double-contained receiver tank.
SZC = silver zeolite cartridge.

Table B2-26. Fire Suppression and Detection Systems at Tank Farm Facilities. (2 sheets)

Building	Fire suppression systems			Fire detection systems		
	Wet	Dry	Halon*	Smoke	Heat	Pull box
200 East Area						
204-AR	X			X	X	X
209-E	X				X	X
241-A-271				X		X
241-A-701					X	X
241-A-702				X		X
241-AN-271				X		X
241-AP-271				X		X
241-AP-273				X		X
241-AW-271				X		X
241-AX-801-A				X		X
241-AX-801-B				X		X
241-AY-801				X		X
241-AZ-271	X					X
241-AZ-701		X				X
241-AZ-702		X				X
241-AZ-801				X		X
241-BY-254				X		X
241-BY-301				X		X
241-BY-302				X		X
244-AR					X	X
244-AR-2707					X	X
244-AR-292					X	X
244-AR-701					X	X
244-AR-715					X	X
244-BX					X	X
271-CR	X					X
272-AW	X					X
2750-E CASS room and hallway	X			X		X

Table B2-26. Fire Suppression and Detection Systems at Tank Farm Facilities. (2 sheets)

Building	Fire suppression systems			Fire detection systems		
	Wet	Dry	Halon*	Smoke	Heat	Pull box
200 West Area						
213-W		X				X
241-SX-271				X		X
241-SX-2707					X	X
241-SX-281				X		X
241-SX-701				X		X
241-SY-271				X		X
241-SY-272				X		X
241-SY-DACS			X	X	X	X
241-T-601					X	X
244-S					X	X
244-TX					X	X
244-U					X	X
272-WA	X					X

*Halon is a trademark of Allied Chemical Corporation, New York, New York.
CASS = Computerized-Automated Surveillance System.
DACS = Data Acquisition and Control System.

Table B2-27. Water Supplies to Tank Waste Remediation System Facilities and Potential Water Use. (2 sheets)

Facility/tank farm	Water[a]	Supply location	Potential water use[b]
200 East Area			
Single-shell tank farms			
241-A	RW	241-CR-271	Flush water
	RW	V40R V47R	
241-AX[c]	RW	V78R	Flush water
241-B	SW	NI	NI
	RW	V29R	
241-BX	RW	V28R	Flush water
241-BY[c]	SW	NI	NI
	RW	241-BY-254 V30R V31R V32R	
241-C[c]	SW	241-CR-271	Flush water
	RW	241-CR-271 241-C-801 V41R V65R	
Double-shell tank farms			
241-AN[c]	RW	NI	Flush water, ventilation system deentrainer
241-AP[c]	RW	NI	Flush water, ventilation system deentrainer
241-AW[c]	RW	NI	Flush water, dip tube drip system
241-AY	RW	V76R	Condenser cooling water, ventilation system deentrainer, flush water
241-AZ[c]	RW	241-AZ-801 V73R V75R	Condenser cooling water, ventilation system deentrainer, flush water, in-facility fire protection
Catch tanks or double-contained receiver tanks			
241-A-302A	NI	NI	NI
241-A-350	NI	NI	NI
241-A-417	NI	NI	NI
241-AX-152	RW	241-AX-152	Pump dilution water, flush water
241-AZ-151	NI	NI	NI
241-AZ-154	NI	NI	NI
241-ER-311	NI	NI	NI
244-A	NI	NI	NI
244-BX[c]	NI	NI	NI
244-CR	NI	NI	NI

Table B2-27. Water Supplies to Tank Waste Remediation System Facilities and Potential Water Use. (2 sheets)

Facility/tank farm	Water[a]	Supply location	Potential water use[b]
200 West Area			
Single-shell tank farms			
241-S	NI	NI	NI
241-SX	NI	NI	NI
241-T	NI	NI	NI
241-TY	NI	NI	NI
241-TX	NI	NI	NI
241-U	NI	NI	NI
Double-shell tank farms			
241-SY[c]	RW	SYSP-KW-V-102	Flush water, ventilation system deentrainer
Catch tanks or double-contained receiver tanks			
241-S-304	NI	NI	NI
241-TX-302C	NI	NI	NI
241-U-301B	NI	NI	NI
241-UX-302A	NI	NI	NI
244-S	NI	NI	NI
244-TX	RW	244-TX	Dip tube drip system, transfer pump dilution water, flush water
244-U*	NI	NI	NI
Other area tank farms , catch tanks , or double-contained receiver tanks , and other support facilities			
241-EW-151	NI	NI	NI
204-AR[c]	RW	NI	In-facility fire protection, ventilation system fire protection, flush water
244-AR[c]	NI	NI	NI
209-E	SW	V143S	NI
	RW	V35R	
213-W	SW	V189S	In-facility fire protection
2727-WA	NI	NI	NI

[a]Flexible hoses can be used for flush water where no water identified.
[b]Use as identified in WHC-SD-WM-HIE-007, 1996, Tank Waste Remediation System FSAR Hazard/Identification Facility Configuration Verification Report, Rev. 0, Westinghouse Hanford Company, Richland, Washington.
[c]Water supply systems have flow totalizers
NI = none identified, no valve number provided, no use provided
RW = raw water
SW = sanitary water
V = valve
*Before BIO implementation, U Farm water was isolated outside of farm by air gap. Water will be required in future to support salt well activities.

Table B2-28. Compressed Air Supply to Tank Waste Remediation System Facilities. (2 sheets)

Facility or tank farm	Compressed air supply		Primary use
	Primary	Other	
200 East Area			
Single-shell tank farms			
241-A	241-A-701	Portable	Purge air, weight factor
241-AX	241-A-701	Portable	Purge air, weight factor
241-B	241-B-701	Portable	Purge air
241-BX*	Conex	241-BY-302 241-BY-302A	Purge air
241-BY*	Conex	241-BY-302 241-BY-302A	Purge air
241-C	241-C-701	Portable	Purge air
Double-shell tank farms			
241-AN	241-AN-273	Portable	Leak detection, tank pressure
241-AP	241-AP-273	Portable	Leak detection, tank pressure
241-AW	241-AW-273	242-A	Leak detection, tank pressure (air lift circulators, specific gravity, Tank 241-AW-102 only)
241-AY	241-A-701	Portable	Purge air, air lift circulators, specific gravity, weight factor
241-AZ	241-A-701	Portable	Air lift circulators, specific gravity, weight factor
Double-contained receiver tanks			
244-A*	Fixed	Portable	Purge air, specific gravity, weight factor
244-BX*	Conex	Portable	Purge air, weight factor
244-CR	241-C-701	Portable	Purge air, specific gravity, weight factor
200 West Area			
Single-shell tank farms			
241-S	Salt well pump skid	Portable	Specific gravity, weight factor
241-SX	Salt well pump skid	Salt well pump skid	Specific gravity, weight factor
241-T	Salt well pump skid	Salt well pump skid	Specific gravity, weight factor
241-TX	NI	Portable	As required
241-TY	NI	Portable	As required
241-U	241-U-701	Salt well pump skid/Portable	Specific gravity, weight factor
Double-shell tank farms			
241-SY	242-S	Portable	Leak detection, tank pressure, specific gravity, weight factor
Double-contained receiver tanks			
244-S	244-S-271	Portable	Specific gravity, weight factor
244-TX	242-T-701 (Conex)	Portable	Specific gravity, weight factor
244-U	241-U-701	Portable	Specific gravity, weight factor

Table B2-28. Compressed Air Supply to Tank Waste Remediation System Facilities. (2 sheets)

Facility or tank farm	Compressed air supply		Primary use
	Primary	Other	
Other area tank farms, catch tanks, or double-contained receiver tanks, and other support facilities			
204-AR*	Fixed	Portable	Weight factor, specific gravity
244-AR*	Fixed	Portable	Weight factor
209-E	209-A	Portable	As required
213-W	Portable	NI	As required
2727-WA	Portable	NI	As required
241-AZ-702A	241-AZ-701	Portable	Ventilation system controls

NOTE: Primary usage taken from WHC-SD-WM-HIE-007, 1996, Tank Waste Remediation System FSAR Hazard Identification/Facility Configuration Verification Report, Rev. 0, Westinghouse Hanford Company, Richland, Washington.

*Fixed or conex system installed; no building or structure identified.

NI = None identified.

Table B2-29. Control Facilities and Change Trailers for Tank Waste Remediation System Facilities. (2 sheets)

Facility	Instrument building or control room number[a]	Change trailer building number[a,b]
200 East Area		
Single-shell tanks		
241-A Tank Farm	241-A-271	MO-439, T-121
241-AX Tank Farm	241-A-271	MO-439
241-B Tank Farm	244-BX	MO-825
241-BX Tank Farm	244-BX	MO-824
241-BY Tank Farm	241-BY-254, 241-BY-301	MO-121
241-C Tank Farm	241-CR-271, MO-211, 241-C-91	MO-822, MO-826, T-120
Double-shell tanks		
241-AN Tank Farm	241-AN-271, 241-AN-274	MO-820
241-AP Tank Farm	241-AP-271, 242-A	MO-815
241-AW Tank Farm	241-AW-271, 242-A	MO-818
241-AY Tank Farm	241-A-271, 241-AY-801	MO-439, T-121
241-AZ Tank Farm and 241-AZ-156	241-A-271, 241-AZ-801-A	MO-439, T-121
241-AY and -AZ Tank Farm	241-AZ-271	Not applicable
Other facilities		
Catch tanks	None	None
DCRTs[b] 244-A 244-BX	 244-A 244-BX	 MO-816 None
B Pond	216-B-3A1	None
200 West Area		
Single-shell tanks		
241-S Tank Farm	241-S-271	MO-295
241-SX Tank Farm	241-SX-271	MO-298
241-T Tank Farm	None	MO-821
241-TX Tank Farm	None	MO-817
241-TY Tank Farm	None	None
241-U Tank Farm	241-U-271	MO-297

Table B2-29. Control Facilities and Change Trailers for Tank Waste Remediation System Facilities. (2 sheets)

Facility	Instrument building or control room number[a]	Change trailer building number[a,b]
Double-shell tanks		
241-SY Tank Farm	241-SY-271, 242-S, DACS-1	MO-296
Other facilities		
Catch tanks	None	None
DCRTs[c]		
244-U	No building number available	None
		None
244-S	No building number available	None
244-TX	No building number available	
600 Area		
241-EW-151	None	None

[a] None. No building was identified during walkdown.
[b] No building number available. Building or facility exists, but no building number is assigned to the facility.
[c] Most facilities not identified
DACS = Data Acquisition and Control System
DCRT = double-contained receiver tank
MO = mobile office
T = trailer

APPENDIX C
SITE CHARACTERISTICS

This page intentionally left blank.

APPENDIX C
SITE CHARACTERISTICS

CONTENTS

C1.0 SITE CHARACTERISTICS C-1
C1.1 INTRODUCTION C-1
C1.2 REQUIREMENTS C-1
C1.3 SITE DESCRIPTION C-2
C1.3.1 Geography C-2
C1.3.2 Demography C-5
C1.3.3 Regional Land and Water Use C-6
C1.4 ENVIRONMENTAL DESCRIPTION C-7
C1.4.1 Meteorology C-7
C1.4.2 Hydrology C-15
C1.4.3 Geology C-23
C1.5 NATURAL PHENOMENA THREATS C-36
C1.6 EXTERNAL MAN-MADE THREATS C-38
C1.7 NEARBY FACILITIES C-39
C1.7.1 Potential Effects from Nearby Facilities C-39
C1.7.2 Potential Effects to Nearby Facilities C-44
C1.8 VALIDITY OF EXISTING ENVIRONMENTAL ANALYSES C-44
C1.9 REFERENCES C-44

LIST OF FIGURES

C1-1 Location of the Hanford Site, Principal Cities and Towns in the Vicinity of the Site, and Prominent Natural Features in Washington State FC-1

C1-2 Prominent Natural Features of the Hanford Site Vicinity FC-2

C1-3 Location of the Hanford Site with Respect to Local Counties and Regional Highways FC-3

C1-4 Hanford Site Map Showing Operational and Multipurpose Area Boundaries FC-4

C1-5 Hanford Site Map Showing Surrounding Facilities and Access Routes FC-5

C1-6 Hanford Site Topographic Map and Cross-Section FC-6

C1-7 Map of the 200 East Area Facilities, Including Tank Waste Remediation System Facilities. FC-7

C1-8 Map of the 200 West Area Facilities, Including Tank Waste Remediation System Facilities FC-8

C1-9 Counties and Major Cities Within 80-km (50-mi) of the Hanford Site FC-9

C1-10 Estimated 1996 Onsite Employee Distribution in the 200 East Area by Zones FC-10

C1-11 Estimated 1996 Onsite Employee Distribution in the 200 West and 600 Areas by Zones FC-11

C1-12 Location of the Yakima Firing Center with Respect to the Hanford Site FC-12

C1-13 Hanford Site Meteorological Monitoring Network FC-13

C1-14 Topographical Features that Impact the Hanford Site Climate . . . FC-14

C1-15 Maximum Probable Precipitation Hazard Curve FC-15

C1-16 Hanford Site Snow Depth Probabilities Based on the Greatest Depth of Snow on the Ground at the Site from Winter of 1946-1947 to Winter of 1980-1981 . . . . . FC-16

C1-17 Hanford Site Wind Hazard Curves Based on Recommended Design Wind Speeds FC-17

C1-18 Wind Rose and Wind Speed Histogram for the 200 East Area FC-18

C1-19 Wind Rose and Wind Speed Histogram for the 200 West Area FC-19

LIST OF FIGURES (Cont'd)

C1-20 Location of Surface Water on the Hanford Site FC-20

C1-21 Location of Dams on the Columbia River and River Drainage Area FC-21

C1-22 Location and Elevation of Columbia River Mile 365 . . . . . FC-22

C1-23 Location of Ephemeral and Discontinuous Cold Creek and Dry Creek and the Extent of the Probable Maximum Flood in the Cold Creek Area FC-23

C1-24 Characteristic Stratigraphy, Lithology, and Hydrogeologic Conditions on the Hanford Site FC-24

C1-25 Conceptual Model of Hypothetical Sources of Tank Leaks and Potential Pathways for Leaked Waste to Reach Groundwater FC-25

C1-26 Groundwater Contours and Steady Streamlines from the 200 East and 200 West Areas Waste Sites to the Columbia River FC-26

C1-27 Location of the Hanford Site, Pasco Basin, and Columbia Plateau FC-27

C1-28 Physiographic Provinces of the Columbia Basin FC-28

C1-29 Generalized Stratigraphy of the Columbia River Basalt Group . . . FC-29

C1-30 Idealized Suprabasalt Subsurface Stratigraphy of the Hanford Site FC-30

C1-31 Annual Probability of Volcanic Ash Accumulation Greater Than 10 mm (0.4 in.) on the Hanford Site FC-31

C1-32 Annual Probability of Volcanic Ash Accumulation Greater Than 100 mm (4 in.) on the Hanford Site FC-32

C1-33 Structural Map of the Yakima Fold Belt FC-33

C1-34 Generalized Geologic Map of the Pasco Basin FC-34

C1-35 Geology of the 200 East and 200 West Areas FC-35

C1-36 Geologic Stratigraphy of the 200 East Area FC-36

C1-37 Geologic Stratigraphy of the 200 East and 200 West Areas FC-37

C1-38 Geologic Stratigraphy of the 200 West Area FC-38

C1-39 Location of Swarm Areas in the Hanford Site Vicinity FC-39

LIST OF FIGURES (Cont'd)

C1-40 Patterns of Earthquake Activity at the Hanford Site 1990 through 1995 . . . . . FC-40

C1-41 Patterns of Subsidence in the Cold Creek Syncline FC-41

C1-42 Mean Seismic Hazard Curves for the 200 East and 200 West Areas FC-42

C1-43 Contributions of Individual Yakima Fold Belt Folds to the Mean Seismic Hazard FC-43

C1-44 200 West Area Performance Category 3 Response Spectra at 5% Damping FC-44

C1-45 Cascade Range Volcanic Ash Hazard Curve FC-45

C1-46 Range of a Rocket Launched from the Yakima Firing Center Multiple Launch Rocket System with Respect to the Hanford Site . FC-46

LIST OF TABLES

C1-1 Population in the Kennewick-Pasco-Richland Metropolitan Statistical Area, 1980-1995 . . . . . TC-1

C1-2 Average Temperatures for 1961-1990 and Extreme Temperatures for 1945-1994 at the Hanford Meteorological Station TC-1

C1-3 Average Number of Days that Maximum and Minimum Temperatures at the Hanford Meteorological Station were Above or Below Specified Limits (1945-1995) TC-2

C1-4 Hanford Site Average Precipitation for 1945-1995 and Extreme Precipitation for Specified Years TC-3

C1-5 Hanford Site Probable Maximum Precipitation Estimates and Average Return Estimates for Specified Precipitation Durations TC-4

C1-6 Monthly Average and Seasonal Maximum Recorded Snowfall at the Hanford Site (1945-1995) TC-5

C1-7 Average Number of Thunderstorm Days Recorded at the Hanford Meteorological Station (1945-1995) TC-5

C1-8 Maximum Peak Gusts Recorded 15 m (50 ft) Aboveground at the Hanford Meteorological Station (1945-1995) TC-6

C1-9 Average Number of Days of Dust or Blowing Dust Recorded at the Hanford Meteorological Station (1945-1995) TC-6

C1-10 Monthly and Annual Number of Days with Fog and Dense Fog at the Hanford Site (1945-1995) TC-7

C1-11 Average Monthly Sky Cover, Sunrise to Sunset, Recorded at the Hanford Meteorological Station (1946-1994) TC-7

C1-12 Average Number of Clear, Partly Cloudy, and Cloudy Days Recorded at the Hanford Meteorological Station (1954-1995) . . . TC-8

C1-13 Occurrence of Mixing-Layer Thicknesses at the Hanford Site by Season and Time of Day TC-8

C1-14 Percent Probabilities for Extended Periods of Surface-Based Inversions TC-8

C1-15 Joint Frequency Distribution of Hourly Averaged Wind Data for the 200 East Area (January 1983 to December 1991) TC-9

C1-16 Joint Frequency Distribution of Hourly Averaged Wind Data for the 200 West Area (January 1983 to December 1991) TC-11

C1-17 Percent Frequency of Occurrence of Atmospheric Stability Classes A Through G in the 200 East and 200 West Areas (1983 to 1991) . . TC-13

LIST OF TABLES (Cont'd)

C1-18 Infiltration Rates in the 200 West Area. TC-14

C1-19 Hydrogeologic Environmental Setting Data for the 200 East Area Vadose Zone TC-15

C1-20 Hydrogeologic Environmental Setting Data for the 200 West Area Vadose Zone TC-16

C1-21 Hydraulic Conductivity of Suprabasalt Aquifer System Units Under the 200 East and 200 West Areas TC-17

C1-22 Three Crustal Layers Related to Earthquakes at the Hanford Site . TC-18

C1-23 Five General Sources of Earthquakes at the Hanford Site TC-18

C1-24 Seismic Hazard Exceedance Probabilities and Peak Horizontal Surface Ground Accelerations for Each Performance Category . . . TC-18

C1-25 Safety-Class Hanford Site Response Spectra—10/01/73 to 09/06/89 (Fast Flux Test Facility Design Basis) TC-19

C1-26 Safety-Class Hanford Site Response Spectra—9/06/89 to 03/31/96 . TC-19

C1-27 Response Spectra for Existing Performance Category 3, 200 West Area TC-20

C1-28 Summary of Static Soil Properties West of 200 East Area TC-21

C1-29 Summary of Static Soil Properties Southwest of 200 West Area . . TC-22

C1-30 Summary of Dynamic Soil Properties West of 200 East Area TC-23

C1-31 Summary of Dynamic Soil Properties Southwest of 200 West Area . . TC-24

C1-32 Natural Phenomena Design and Evaluation Criteria for New and Existing Hazard Category 2 Facilities TC-25

LIST OF TERMS

CRBG	Columbia River Basalt Group
DOE	U.S. Department of Energy
HMS	Hanford Meteorological Station
PUREX	Plutonium Uranium Extraction (Facility)
Supply System	Washington Public Power Supply System
TWRS	Tank Waste Remediation System
WNP	Washington Nuclear Plant
YFB	Yakima Fold Belt

This page intentionally left blank.

C1.0 SITE CHARACTERISTICS

C1.1 INTRODUCTION

The objective of this chapter is to describe characteristics of the Hanford Site that are applicable to the hazard and accident analyses of specified Tank Waste Remediation System (TWRS) facilities. Applicable TWRS facilities are the single-shell tank farms, the double-shell tank farms, and associated support systems and transfer equipment. See Appendix B, "Facility and Process Description," for details of the facilities addressed in this report.

Much of the Site characteristics information used in this chapter is based on PNL-3509, *Standardized Input for Hanford Environmental Impact Statements, Part II: Site Description*, and PNL-6415, *Hanford Site National Environmental Policy Act (NEPA) Characterization* and DOE/EIS-0189, *Final Environmental Impact Statement for the Tank Waste Remediation System, Hanford Site, Richland, Washington*. Site characteristics are factored into the analyses described in Chapter 5.0, "Safety Analysis."

The figures provided in this chapter have been included to aid the reader in visualizing information that is presented in the text. These sketches should not be considered design drawings, and they must not be used to make engineering modifications to any systems, structures, or components depicted. Facility modifications are approved in accordance with detailed design information found in established procedures, configuration-controlled drawings, and vendor information.

C1.2 REQUIREMENTS

The following are current standards, regulations, and U.S. Department of Energy (DOE) orders that establish the requirements for Hanford Site characterization in support of safety analysis and design. Additional requirements may be imposed on new facilities and facility modifications to meet DOE safety requirements:

- DOE 5480.28, *Natural Phenomena Hazards Mitigation*, Change 0 (1993)[1]
- DOE 6430.1A, *General Design Criteria*, Change 0 (1989)[1]
- DOE-STD-1020-94, *Natural Phenomena Hazards Design and Evaluation Criteria for Department of Energy Facilities*, Change 1 (1994)
- DOE-STD-1021-93, *Natural Phenomena Hazards Performance Categorization Guidelines for Structures, Systems, and Components*, Change 1 (1993)

---

[1]Although DOE 5480.28 and DOE 6430.1A have been rescinded, the contractor is obligated by the existing contract to meet the requirements in these orders.

- DOE-STD-1022-94, *Natural Phenomena Hazards Characterization Criteria*, Change 1 (1994)
- DOE-STD-1023-95, *Natural Phenomena Hazards Assessment Criteria*, Change 1 (1995)
- DOE-STD-1024-92, *Guidelines for Use of Probabilistic Seismic Hazard Curves at Department of Energy Sites*, Change 1 (1992)
- UCRL-15910, *Design and Evaluation Guidelines for DOE Facilities Subjected to Natural Phenomena Hazards.*

C1.3 SITE DESCRIPTION

The following sections address the geography and demography of the area encompassed by, and surrounding, the Hanford Site.

C1.3.1 Geography

C1.3.1.1 Hanford Site Vicinity. The Hanford Site is a 1,450-km^2 (560-mi^2) area located in the state of Washington, as depicted in Figure C1-1. The Columbia River enters the Hanford Site boundary at the northwest corner and crosses over to form the eastern boundary as it flows southward. The section of the river that forms the eastern boundary is a free flowing stretch commonly referred to as the Hanford Reach. The Yakima River flows from west to east, south of the Hanford Site, and empties into the Columbia River at the conjoined cities of Kennewick, Pasco, and Richland as shown in Figure C1-1.

The Hanford Site is bordered on the north by the Saddle Mountains and on the west by the Rattlesnake Hills. Dominant natural features of the Hanford Site include the Columbia River, anticlinal ridges of basalt in and around the Site boundary, and sand dunes near the Columbia River. The surrounding basaltic ridges rise to 1,100 m (3,600 ft). See Figures C1-1 and C1-2 for maps showing some of the prominent natural features in and around the Hanford Site vicinity.

The location of the Hanford Site with respect to local counties and regional highways is shown in Figure C1-3. The Site extends into Benton, Franklin, Grant, and Adams counties. State Highway 240 passes through the Site and within 1.6 km (1.0 mi) of the 200 West Area facilities and within 4.24 km (2.65 mi) of the nearest TWRS facility.

C1.3.1.2 Hanford Site. The majority of the land within the Hanford Site boundary is a limited-access area under DOE control for use in environmental restoration and remediation efforts. The DOE nuclear and nonnuclear industrial activities within an 8-km (5-mi) radius of the TWRS facilities are described in detail in Section C1.7. DOE nuclear facilities are located in what are called operational areas. Site operational areas are identified by area numbers and letters. These areas are shown in Figure C1-4. Several other areas at the Hanford Site are managed under a multipurpose concept and

serve to isolate the areas of DOE nuclear activities (Figure C1-4). All industrial activities on Hanford Site leased land must be compatible with DOE activities and must be approved by DOE.

With the exception of subsurface contamination due to releases (inadvertent or planned) and the relatively isolated location of the Hanford Site (away from major population centers) there are no other unique or special features associated with the Site. Subsurface contamination (as it relates to accident analyses) is briefly discussed in Section C1.4.2. DOE/EIS-0189, DOE/RL-92-19, *200 East Groundwater Aggregate Area Management Study Report*, and DOE/RL-92-16, *200 West Groundwater Aggregate Area Management Study Report*, identify and describe existing subsurface and surface contamination areas and radiological and toxicological constituents.

Public access to the Hanford Site is controlled for DOE at the Wye and Yakima Barricades on State Highway 240 (Figure C1-5). Hanford Patrol, the Site security organization, is responsible for control at the barricades. A recently constructed additional access point to the 200 East and 200 West Areas from State Highway 240, with limited hours of operation, is located near the southeast corner of the 200 West Area. Public access through the Hanford Site on State Highways 24, 240, and 243 is not DOE-controlled under normal circumstances. Traffic on the Columbia River, in the airspace over the Hanford Site, and on onsite access routes to areas used by non-DOE organizations (e.g., U.S. Ecology, Incorporated; Washington Public Power Supply System [Supply System]) is also not subject to DOE controls under normal circumstances. Under emergency plan conditions, all access to the Site (with the exception of the Columbia River) will be DOE-controlled and all Site routes to traffic not associated with official and approved activities may be closed.

C1.3.1.2.1 Hanford Site Areas. In 1943, the U.S. Army Corps of Engineers selected the Hanford Site for the construction of nuclear reactors and chemical processing facilities in support of the war effort. The current mission is the management, storage, and disposal of radioactive and hazardous wastes. Approximately 6% of the total available Hanford Site land area is occupied with DOE operational areas (Figure C1-4). The remaining 94% of the Site land area is unoccupied and managed by DOE. Site operating areas are identified by area numbers and are briefly outlined below.

100 Areas. There are six 100 Areas (100-B and -C, 100-D and -DR, 100-F, 100-H, 100-KW and -KE, 100-N) bordering directly on the Columbia River in the northernmost portion of the Site. The nine graphite-moderated plutonium production reactors (awaiting decontamination and decommissioning) are located in these areas. The 100 Areas cover about 11 km^2 (4 mi^2).

200 Areas. The 200 East and 200 West Areas are located near the center of the Hanford Site. The 200 East and 200 West Areas are located on a relatively flat terrace known as the 200 Areas Plateau (Figure C1-6). A number of waste management, storage, and disposal activities are currently being performed in these areas. Activities in the 200 East and 200 West Areas are within the DOE-controlled zone, which is surrounded by a security fence that serves to limit general access. The TWRS facilities addressed in this report are located in the 200 East and 200 West Areas (Figures C1-7 and C1-8).

There are no permanent residences in this area. The 200 East and 200 West Areas cover approximately 15.5 km^2 (6 mi^2).

300 Area. The 300 Area, located north of Richland, is the site of nuclear research and development. This area covers 1.5 km^2 (0.6 mi^2).

400 Area. The 400 Area is located northwest of Richland and is the site of the Fast Flux Test Facility. The 400 Area covers 1.5 km^2 (0.6 mi^2).

600 Area. The 600 Area includes all of the Hanford Site that is not part of the 100, 200 East, 200 West, 300, or 400 Areas. A cross-site transfer line, operated by TWRS, traverses the 600 Area and is used to transfer liquid wastes between underground storage tanks located in the 200 East and 200 West Areas. See Figure C1-4 for a map showing the location of these areas.

- **Fitzner-Eberhardt Arid Lands Ecology Reserve**—The Fitzner-Eberhardt Arid Lands Ecology Reserve occupies the southwest segment of the Hanford Site. This area is a limited-access area managed by Pacific Northwest National Laboratory and has been set aside for ecological studies. This area covers 310 km^2 (120 mi^2). The Big Bend Alberta Company owns mineral rights to several parcels of land in the reserve and holds the right to perform exploratory drilling.

- **State of Washington**—A segment covering 4 km^2 (1.5 mi^2) is leased by Washington State. A part of this segment between the 200 East and 200 West Areas is used for commercial low-level radioactive waste disposal. U.S. Ecology, Incorporated is a private company responsible for managing disposal of the solid, low-level radioactive waste from commercial—not Hanford Site—sources in this area. Another segment of this area measuring 2.6 km^2 (1 mi^2) has been transferred to Washington State as a potential site for disposal of nonradioactive hazardous wastes.

- **Washington Public Power Supply System**—An area measuring 4.4 km^2 (1.6 mi^2) is used by the Supply System for commercial nuclear power plants. This area is located approximately 17 km (10.5 mi) southeast of the 200 East Area and approximately 5 km (3 mi) west of the Columbia River. Washington Nuclear Plant (WNP) Number 2, a boiling-water reactor, is currently in operation at this location.

- **Saddle Mountains National Wildlife Refuge**—About 130 km^2 (50 mi^2) of land north of the Columbia River is managed under a revocable use permit by the U.S. Fish and Wildlife Service. This area is designated as the U.S. Fish and Wildlife Service Saddle Mountains National Wildlife Refuge. The U.S. Fish and Wildlife Service also manages seven islands in the Hanford Reach section of the Columbia River as part of the McNary National Wildlife Refuge.

- **Wahluke Wildlife Recreational Area**—An area measuring 225 km^2 (87 mi^2) is under a revocable use permit to the Washington State Department of Wildlife for recreational game management. This area is also located north of the Columbia River and is designated as the Wahluke Wildlife Recreational Area. Public outdoor recreational use is permitted in this area.

- **Bonneville Power Administration**—Support facilities for the controlled access areas and an electrical transmission substation at Midway, Washington, near the northwest corner of the Hanford Site, are maintained by the Bonneville Power Administration. Site transmission lines are also maintained by the Bonneville Power Administration. See Figure C1-4 for a map showing transmission line locations.

The facilities in each area are accessible via existing Hanford Site streets and railroad lines and most have utilities (i.e., steam, raw water, electricity, communications) and radioactive waste pipelines. The roads and rail lines in the 200 East and 200 West Areas and Route 3 in the 600 Area are shown in Figures C1-7 and C1-8.

C1.3.1.2.2 Hanford Site Boundaries. The Hanford Site boundary that has been established for calculating impacts of potential Site facility accidents is shown in Figure C1-4. TWRS activities in the 200 East, 200 West, and 600 Areas are within this zone. The zone is surrounded by a security fence that limits general access. DOE has the authority to regulate all activities in this zone including exclusion or removal of personnel and property. There are no permanent residences in this zone or elsewhere on the Hanford Site. The minimum distance to the Site boundary, 11 km (7 mi), was determined by measuring from a rectangular "box" around the 200 East and 200 West Areas to the nearest point on the Hanford Site boundary.

C1.3.2 Demography

The population density on the Hanford Site is very low as a result of the federal ownership of the land, and the population distribution in the area surrounding the Hanford Site is not uniform. Most of the area adjacent to the Site to the east, north, and west is used for farm or range land and is populated with scattered farming communities.

Benton and Franklin Counties, which are adjacent to the Hanford Site, make up the Kennewick-Pasco-Richland metropolitan statistical area. Other major cities within Benton County include Benton City, Prosser, and West Richland. The second largest city in Franklin County is Connell. Other counties in the vicinity of the Hanford Site include Yakima, Walla Walla, Adams, and Grant Counties in Washington State, and Umatilla and Morrow Counties in Oregon (Figure C1-9). Table C1-1 lists the Kennewick-Pasco-Richland metropolitan statistical area population for 1980 through 1995.

Regional population (residential and transient) distribution data is used by the DOE Richland Operations Office for emergency response planning. Accident consequences are calculated to a maximum offsite individual located nearest to the 200 East or 200 West Areas (Section C1.3.1). The consequence data can be used in emergency response planning to determine offsite evacuation routes and mitigative features (i.e., shielding or shelters) required to protect the public. The emergency response plan for the Hanford Site is described in DOE/RL-94-02, *Hanford Emergency Response Plan*.

Note that the population figures presented in Table C1-1 do not identify transient populations (i.e., recreational users and migrant workers).

Evacuation time studies performed in support of Supply System emergency planning indicate that to the east of the Supply System operating reactor, migrant worker populations are roughly two times the recreational user populations (Mogle 1987, *WNP-1, 2 Ten Mile EPZ Evacuation Time Assessment Study*). To the northwest of the reactor (i.e., in the direction of the 200 East and 200 West Areas) the transient population is comprised predominantly of recreational user populations (e.g., boaters).

Individuals on the Columbia River, as well as those individuals on State Highways 24, 240, and 243, are considered transient. Access to the highways or the Columbia River is not controlled, except during emergency conditions (DOE/RL-94-02).

Individuals, such as tribal organizations, universities, or other federal, state, or local government agencies, who have received approval from DOE-RL to access areas within the Hanford Site (e.g., Fitzner-Eberhardt Arid Lands Ecology Reserve) are also considered transient. The DOE-RL, in accordance with DOE RLID 1210.1, *Hanford Visitor Policies and Procedures*, may permit uncontrolled access to the Hanford Site; however, all individuals, permitted either controlled or uncontrolled access to the Hanford Site, are required to receive emergency preparedness training (DOE/RL-94-02).

Approximately 15,000 persons were employed on the Hanford Site in late 1995. Figures C1-10 and C1-11 are maps that identify estimated onsite employee distributions by zones as of March 1996. Some Hanford Site work assignments include shift and weekend coverage, therefore, the total number of persons on the Site at any one time varies with the time of day, the staffing requirements for active projects, and daily fluctuations in employee work attendance patterns.

There are currently no hospitals, nursing homes, or penal institutions within 20 km (12 mi) of TWRS facilities. The three closest schools—Edwin Markham Elementary School, Cypress Gardens School, and Country Christian School—are at least 21 km (13 mi) southeast of the 200 East Area. The schools have a total population of less than 500.

C1.3.3 Regional Land and Water Use

This section characterizes regional land and water use outside the Hanford Site boundaries based on information contained in DOE/EIS-0113, *Final Environmental Impact Statement: Disposal of Hanford Defense High-Level, Transuranic, and Tank Wastes, Hanford Site, Richland, Washington*, and in PNL-6415.

Land use in the six-county region surrounding the Hanford Site (i.e., Adams, Franklin, Walla Walla, Benton, Yakima, and Grant) is predominantly agricultural. The main industries in the conjoined cities of Kennewick, Pasco, and Richland are either agriculture and energy production or are related to these industries. More than 75% of the land area in the six-county region is used for agricultural purposes, compared to less than 40% agricultural land use statewide. The percentage of agricultural land that is irrigated in this region varies from a low of 33% in Yakima County to a high

of 73% in Grant County. Areas of Yakima County near the Hanford Site are irrigated extensively.

The land used for agricultural purposes lies primarily north and east of the Columbia River and south of the Yakima River. The principal agricultural crops associated with irrigated and dryland farming include hay, wheat, potatoes, corn, apples, soft fruit, and vegetables. Land in the area just outside the Hanford Site to the south and west is available for farming, but the present area is used mainly for grazing cattle and sheep. In the early 1800s the dominant regional plant was big sagebrush, but today cheatgrass is the dominant plant due to livestock grazing, crop raising, and wildfires.

Major regional water uses, in decreasing order, are agricultural, industrial, and municipal.

A U.S. Army training facility, the Yakima Firing Center, is located northwest of the western Hanford Site boundary (Figure C1-12). The nearest boundary of the firing center is more than 24 km (15 mi) west of the 200 West Area. The facility is primarily used as a training area for large-scale maneuvers, particularly those involving tracked vehicles and the use of large long-range weapons (DOE-RW-0070, *Environmental Assessment, Reference Repository Location, Richland, Washington*).

C1.4 ENVIRONMENTAL DESCRIPTION

The following sections briefly define the meteorology, hydrology, and geology of the Hanford Site. This information has been used in calculating impacts of postulated TWRS facility accidents to receptors (i.e., onsite, offsite, environmental) and in evaluating facility needs for adequate response to natural phenomena threats. Chapter 5.0 for results of these calculations and evaluations.

C1.4.1 Meteorology

This section summarizes Site-specific meteorology data. This information is used in hazards and accident analyses (e.g., wind, tornado, precipitation) in accordance with DOE-STD-1023-95 and to verify the applicability of existing natural phenomena hazard codes and standards. The Site average wind speeds are used to develop postulated accident consequences and to perform consequence determinations in Chapter 5.0. Criteria from DOE-STD-1020-94 are identified in the applicable subsections of this chapter.

An extensive meteorological monitoring program is conducted at the Hanford Site. Various meteorological data is measured, observed, and stored as part of this program. Program data is used in the preparation of safety documentation and in the preparation of emergency response planning. A wide range of meteorological variables is measured or observed at the HMS, including temperature, relative humidity, precipitation, atmospheric pressure, solar radiation, cloud cover, visibility, and subsurface temperature. Wind data is measured at various levels on a 125-m (410-ft) tower located 492 m (1,614 ft) east of the HMS. Wind and temperature measurements are recorded at various levels at three 60-m (200-ft) towers in the 300, 400, and 100-N Areas

and at 23 active 9.1-m (30-ft) towers distributed on the Hanford Site and in the nearby vicinity (Figure C1-13). Data from all towers is telemetered to the HMS. The towers and the HMS make up the Hanford Site meteorological monitoring network. The Site monitoring network is described in detail in PNL-6684, *The Data Collection Component of the Hanford Meteorological Monitoring Program.*

Meteorological data collected at the HMS since 1945 is available. Data from the HMS is representative of the general meteorological conditions for the Site, and specifically for the 200 Areas Plateau. Local variation in the topography of the Hanford Site may cause some aspect of the climate at portions of the Site to differ significantly from those at the HMS. For example, winds near the Columbia River are different from those at the HMS, and, similarly, precipitation along the slopes of the Rattlesnake Hills differs from that at the HMS. Information contained in this section and the associated subsections is taken primarily from PNNL-11107, *Climatological Data Summary 1995, with Historical Data*, and PNL-4622, *Climatological Summary for the Hanford Area.*

C1.4.1.1 Regional Climate. The climate of the Hanford Site region can be classified as midlatitude semiarid, midlatitude desert, or semiarid shrub-steppe depending on the climatological classification scheme used (Critchfield 1974, *General Climatology*). Summers are warm and dry with abundant sunshine. Large diurnal temperature variation results from intense solar heating during the day and radiational cooling at night. Daytime high temperatures in June, July, and August periodically exceed 38 °C (100 °F). Winters are cool with occasional precipitation. Cold air associated with modified arctic air masses can reach the area and cause temperatures to drop below -18 °C (0 °F). Overcast skies and fog periodically occur during the winter season (PNL-4622).

Topographic features have a significant impact on the Hanford Site climate. All air masses that reach the region undergo some modification as a result of passage over the complex Pacific Northwest terrain. The climate of the region is strongly influenced by the Pacific Ocean and the Cascade Range. The relatively low annual average rainfall of 168 mm (6.6 in.) is caused largely by the rain shadow created by the Cascade Range. This mountain range limits much of the maritime influence of the Pacific Ocean that would exist if the mountains were not present. Maritime influences are experienced in the region during the passage of frontal systems that pass through gaps (e.g., Columbia River Gorge) in the Cascade Range.

The Rocky Mountains to the east and north of the Site also impact the regional climate by protecting the region from the severe winter storms and the extremely low temperatures associated with modified arctic air masses that move southward through Canada. Yakima Ridge, Rattlesnake Hills, Horse Heaven Hills, Saddle Mountains, and the Columbia River are other topographic features that impact the local climate (Figure C1-14).

The position of the jet stream directs storm systems into Washington State during the cooler months. These storm systems cause the majority of the precipitation at the Site. The cold, or occluded, fronts associated with these storm systems originate in maritime polar, continental polar, or arctic air masses. Warm fronts occur as warmer maritime air flows over colder

continental air. An average of 10 identifiable warm fronts and 52 cold fronts pass through the region each year, the majority of which occur during the colder months (PNL-4622). The passage of fronts leads to increased frequency and intensity of precipitation. Persistent high-pressure ridges in the upper troposphere also periodically occur in the cool season. The high-pressure ridges can trap cold air near the surface and cause extended periods of wintertime air stagnation.

The position of the jet stream directs most storm systems north of Washington State during the warm months, which results in fewer and weaker frontal passages than in the cool months. High pressure with stable, subsiding air is the dominant meteorological condition during the warmer period. Warm weather precipitation tends to be associated with convective activity and the advection of moist, maritime air into the region (PNL-4622).

C1.4.1.1.1 Temperature. Average and extreme temperatures recorded at the HMS are listed in Table C1-2. The annual average temperature is 12 °C (53 °F). July is typically the warmest month with an average maximum temperature of 33 °C (91 °F), an average minimum temperature of 16 °C (61 °F), and a monthly average temperature of 25 °C (76 °F). January tends to be the coolest month with an average maximum temperature of 4 °C (38 °F), an average minimum temperature of -4 °C (24 °F), and a monthly average temperature of 0 °C (32 °F). Observed temperature extremes for the Hanford Site since 1944 range from 45 °C (113 °F) to -31 °C (-23 °F). The highest temperature ever recorded on the Hanford Site was 46 °C (115 °F) on July 27, 1939. The lowest temperature ever recorded on the Hanford Site was -33 °C (-27 °F) on December 12, 1919. The high and low temperatures were recorded before the HMS was operational and are not included in Table C1-2.

Table C1-3 shows the average number of days that maximum and minimum temperatures at the HMS were above or below specified limits. Maximum temperatures greater than or equal to 38 °C (100 °F) occur an average of 12 days per year with a range of one to 28 days. Maximum temperatures greater than or equal to 32 °C (90 °F) occur an average of 51 days per year with a range of 29 to 79 days. Maximum temperatures less than or equal to 0 °C (32 °F) occur an average of 25 days per year with a range of 2 to 58 days. Minimum temperatures less than or equal to 0 °C (32 °F) occur an average of 106 days per year with a range of 70 to 143 days. Minimum temperatures less than or equal to -18 °C (0 °F) occur an average of three days per year with a range of 0 to 18 days. An average of 183 days per year are free of freezing temperatures with the recorded range being 142 to 216 days.

Severe and abrupt temperature changes occur in the Hanford Site vicinity. During winter, rapid temperature increases, accompanied by surface winds varying from calm to greater than 32 km/h (20 mph), frequently occur. This phenomenon, known as a Chinook wind, may produce dramatic temperature variations. For example, on February 10, 1971, a 9 °C (16.2 °F) rise in 12 minutes was observed at the HMS (PNL-4622).

C1.4.1.1.2 Precipitation. The annual average precipitation at the Hanford Site is 168 mm (6.6 in.) in the wettest year (1995) being 312 mm (12.3 in.) and the driest year (1976) being 76 mm (3 in.). Monthly averaged and annual extreme precipitation amounts recorded at the Hanford Site are listed in Table C1-4. On average, 54% of normal annual precipitation falls

during November through February. December is the wettest month with 25 mm (1 in.) and July is the driest month with 5.1 mm (0.2 in.). The wettest month on record is June 1950 with 74 mm (2.9 in.). September 1991, August 1988, and August 1955 are the driest months on record with no precipitation. A trace (i.e., less than 0.1 mm [0.005 in.]) or more of precipitation falls an average of 125 days per year. The average number of days per month in which a trace or more of precipitation falls ranges from 16 days in January to five days in July. Precipitation totalling 2.5 mm (0.1 in.) or more in a day occurs 24 days a year. During a 49-year period of record (1945 through 1995), precipitation totaling 25 mm (1 in.) or more in a day has occurred 63 times. The greatest recorded one-day precipitation was 41 mm (1.6 in.) on October 1, 1957 (PNNL-11107).

A recent cooperative study by the National Oceanic and Atmospheric Administration, the Bureau of Reclamation, and the U.S. Army Corps of Engineers updates the probable maximum precipitation estimates for the Pacific Northwest. Hansen et al. 1994, *Probable Maximum Precipitation - Pacific Northwest States*, documents the findings of this study which supersede earlier work done by the three organizations. The probable maximum precipitation values, shown in Table C1-5, are estimates of the maximum precipitation physically possible for both general storms (i.e., large air mass interactions) and local storms (i.e., unstable air, thunderstorms). Hansen et al. (1994) shows that at the Hanford Site the probable maximum precipitation for a six-hour local storm produces more than that produced in the probable maximum for a 24-hour general storm. The probable maximum precipitation for a six-hour local storm is related to the area of the storm, the smaller area yielding the most intense storm and highest precipitation. Data is presented for the 2.6-km^2 (1.0-mi^2) and the 26-km^2 (10-mi^2) storm. No annual probability of exceedance is given in Hansen et al. (1994) for the probable maximum precipitation for either storm. The probable maximum precipitation is conservatively assumed to have a less than 1×10^{-6} annual probability of exceedance based on ASCE-7, *Minimum Design Loads for Buildings and Other Structures*.

The probable six-hour maximum precipitation for more frequent storms is based on the analysis of extreme values from 22 years of Hanford Site meteorological data (Table C1-5). The precipitation estimates for 100- and 1,000-year return periods are based on HMS data. Although the estimated values cannot be compared directly with the 2.6-km^2 (1-mi^2) local storm or the 26-km^2 (10-mi^2) general storm, the values do provide a data-based estimate for extreme precipitation on the 200 Areas Plateau. The six-hour precipitation hazard curve has been estimated using the 100- and 1,000-year average return period values (1×10^{-2} and 1×10^{-3} annual probability exceedance, respectively) from BNWL-1605, *Climatography of the Hanford Area*, and using the six-hour probable maximum precipitation at an assumed frequency of 1×10^{-6} (Figure C1-15).

Total annual snowfall (i.e., all frozen precipitation) varies from a low of 7.6 mm (0.3 in.) to 1,422 mm (56 in.). The average snowfall is 381 mm (15 in.) a year. Table C1-6 presents the monthly average and seasonal maximum snowfalls. The maximum snow depth recorded at HMS (396 mm [15.6 in.]) occurred in December 1985, but the maximum recorded snow depth for the Hanford Site (610 mm [24 in.]) occurred in February 1916. The record number of days with snow depth greater than or equal to 152 mm (6 in.) was 43 days in the

winter of 1992-1993. The probability that the depth of snow on the ground will exceed 152 mm (6 in.) is 30% during the winter season. The scatter plot in Figure C1-16 shows Hanford Site snow depth probabilities based on the maximum depths of snow on the ground at the Site that were recorded from the winter of 1946-1947 to the winter of 1980-1981.

Model building codes and standards specify the design criteria for snow loads (DOE-STD-1020-94). The building standards for snow loads are found in ASCE-7. The design ground snow load for the Hanford Site is 73.2 kg/m^2 (15 lb/ft^2).

Glaze ice is a coating of ice formed when rain or drizzle freezes on contact with any surface having a temperature that is below freezing. The annual average number of days with glaze ice is six. Glaze ice generally occurs between November and March. The highest number of days with glaze ice in any winter season is 18. The lowest number of days with glaze ice in any winter season is one. The highest number of days with glaze ice in any given month was nine in January 1970. Rime ice (i.e., supercooled droplets that freeze on contact with solid objects) is another type of icing phenomena that is generally associated with supercooled fog in the nearby hills or along the banks of the Columbia River.

C1.4.1.1.3 Thunderstorms. A thunderstorm day is a calendar day in which thunder is heard at the HMS observing station one or more times. Table C1-7 shows the average number of thunderstorm days recorded at the HMS per month and per year. The average number of thunderstorm days per year is 10, with the total of days varying from a low of three to a high of 23. The largest number of thunderstorm days in a single month was eight. Thunderstorm season is essentially from April through September, but thunderstorms can occur during any month of the year although none have been observed in November or January.

Thunderstorms are classified as severe by the National Weather Service when wind gusts exceed 93 km/h (58 mph) or when hail diameter equals or exceeds 25 mm (1 in.). Of all thunderstorm events observed at the HMS, 1.9% have been severe (PNL-6415). Of the 1.9%, all of the severe storm events met the wind gust classification criteria, but hail was seldom observed. The maximum recorded number of days with hail in a year is two.

Large differences in electrical potential between cloud and earth can occur during thunderstorms and can lead to lightning strikes. There is an average of 0.06 lightning strikes per year per square kilometer at the Hanford Site (WHC-SD-WM-ES-387, *Probability, Consequences, and Mitigation for Lightning Strikes of Hanford High Level Waste Tanks*). The probability of lightning directly striking one of 161 tanks (i.e., the 16 smaller single-shell tanks excluded) was calculated as 3×10^{-5} every year. Considering all 177 tanks, the probability of a lightning strike in some tank farm area is about 1×10^{-2} strike a year. Lightning strikes in the tank farms have not been documented.

C1.4.1.1.4 Extreme Winds and Tornados. The maximum peak gusts recorded at the HMS are shown in Table C1-8. The highest peak gust, measured at 15 m (50 ft) above ground level, was 129 km/h (80 mph) in January 1972. Peak wind gusts at the other 23 meteorological towers located throughout the Site have

been observed to be as high as 147 km/h (91 mph). On the basis of peak gusts observed from 1945 through 1980, an extreme peak gust at 15 m (50 ft), 100-year return period, is estimated in PNL-4622 to be 137 km/h (86 mph), and an extreme peak gust at 15 m (50 ft), 10-year return period, is estimated to be 114 km/h (70 mph).

Two probabilistic wind hazard assessments have been completed for the Hanford Site. The first assessment, UCRL-53526, *Natural Phenomena Hazards Modeling Project: Extreme Wind/Tornado Hazard Models for Department of Energy Sites*, is based on more than 30 years of pre-1979 Hanford Site wind data. The results of the assessment addressed in UCRL-53526 are shown in Figure C1-17 and are the basis for the recommended Hanford Site wind speeds for calculating hazard assessments listed in DOE-STD-1020-94.

NUREG/CR-4492, *Methodology for Estimating Extreme Winds for Probabilistic Risk Assessments*, is the other probabilistic wind hazard assessment that describes a procedure for estimating extreme wind probabilities. The application of this methodology to Hanford Site data, including post-1979 data, resulted in the hazard curves shown in Figure C1-17.

The wind hazard annual probability of exceedance for Performance Category 1 and 2 is 2×10^{-2} (DOE-STD-1020-94). In Figure C1-17, this is about 89 km/h (55 mph) on the UCRL-53526 curve and about 93 km/h (58 mph) on the NUREG/CR-4492 curve. A minimum-design wind speed of 113 km/h (70 mph) is required in ASCE-7 and recommended in DOE-STD-1020-94. The Hanford Site design-basis wind speed for Performance Categories 1 and 2 is 113 km/h (70 mph). All wind speeds are fastest mile speeds at 9 m (30 ft) off the ground.

The straight wind hazard exceedance probability for Performance Category 3 is 1×10^{-3}. In Figure C1-17, this is approximately 108 km/h (67 mph) on the UCRL-53526 curve and 116 km/h (72 mph) on the NUREG/CR-4492 curve. The minimum straight wind speed for a Performance Category 3 design basis in DOE-STD-1020-94 is 129 km/h (80 mph), which is higher than either of the wind hazard studies and is, therefore, the design basis for the Site.

The minimum Performance Category 4 wind speed is 145 km/h (90 mph). This exceeds values for both of the straight wind curves and is, therefore, the design wind speed for Performance Category 4.

The point at which the straight-wind and tornado hazard curves intersect determines whether tornadoes should be included in the design and evaluation criteria for the TWRS facilities (UCRL-53526). If the exceedance probability at the intersection is less than 2×10^{-5}, straight winds control the design criteria. In Figure C1-17, the intersection is at 3×10^{-6} on the UCRL-53526 curve and 8×10^{-6} on the NUREG/CR-4492 curve. Therefore, following DOE guidance the Hanford Site does not have a DOE design-basis tornado (UCRL-53526).

C1.4.1.1.5 Dust and Blowing Dust. Dust and blowing dust conditions occur with some frequency at the Hanford Site. Dust and blowing dust conditions are recorded at HMS when horizontal visibility is reduced to 9.6 km (6 mi) or less. Dust conditions occur when dust is carried into the area from distant sources. Dust conditions may or may not occur during strong winds and

have been observed with wind speeds ranging from 6 km/h (4 mph) to 48 km/h (30 mph). Blowing dust conditions occur when dust is being picked up locally and occurs with strong winds. Wind speeds during blowing dust conditions range from 31 km/h (19 mph) to 129 km/h (80 mph). Dust and blowing dust conditions occur at HMS but blowing dust is most common. Table C1-9 shows the average number of days of dust or blowing dust conditions recorded at the HMS. The average number of days per year with dust or blowing dust conditions is five. The greatest number of such days in any year has been 20, while the fewest has been zero. The greatest number of days with dust or blowing dust in any month was nine in May 1980. Dust and blowing dust conditions occur most frequently between March and May, and again in September, and occur least frequently during November and December. There is no specific design basis criteria associated with dust and blowing dust. Past evaluation of dust and blowing dust has been similar to volcanic ash for design and evaluation purposes.

C1.4.1.1.6 Fog and Cloud Cover. Fog conditions are recorded at the HMS any time horizontal visibility is reduced to 9.6 km (6 mi) or less due to suspension of water droplets in the surface layer of the atmosphere. Table C1-10 shows the average monthly and annual number of days with fog and dense fog at the Hanford Site. Dense fog conditions are recorded when horizontal visibility is reduced to 0.40 km (0.25 mi) or less. Most of the fog recorded at HMS is radiation fog, a common type of fog that forms on nights with light wind, clear sky, and moist air in the lower levels of the atmosphere. Nearly 90% of fog and dense fog conditions occur during the late autumn and winter months. The longest recorded duration of fog was 114 hours in December 1985 and the longest duration of dense fog was 47 hours in December 1957 (PNNL-11107).

Cloud cover is a term used to express the condition when a portion of the celestial dome is (1) covered but not necessarily hidden by clouds or obscuring phenomena aloft; (2) hidden by an obscuring phenomenon on the ground (e.g., fog, smoke); or (3) a combination of (1) and (2). Cloud cover at the HMS is measured hourly by scanning the sky and estimating the number of tenths that are covered. Cloud cover designation on a given day is based on the cloud cover average from sunrise to sunset. Cloud cover designations are as follows:

- Clear (zero to three tenths)
- Partly cloudy (four to seven tenths)
- Cloudy (eight to 10 tenths).

Table C1-11 shows the average monthly sunrise to sunset sky cover values from 1946 through 1994, and Table C1-12 shows the average number of clear, partly cloudy, and cloudy days from 1954 to 1995. During the period of record (1954 through 1995), an average of 199 sunny days (sum of clear and partly cloudy days) was recorded per year at the HMS.

C1.4.1.1.7 Relative Humidity. The annual mean relative humidity recorded at HMS is 55% with the highest average monthly relative humidity (80%) occurring in December and the lowest average monthly relative humidity (33%) occurring in July. Daily relative humidity can change 20% to 30%

between early morning and late afternoon. Changes in relative humidity are less pronounced during the winter months (PNL-4622). Higher relative humidity can be expected at locations near the Columbia River and at some locations on the Site periphery where there is increased airborne water vapor from the Columbia River and from irrigated land.

C1.4.1.1.8 Dispersion Climatology. Atmospheric dispersion, the transport and diffusion of gases and particles within the atmosphere, is a function of wind speed, duration and direction of wind, the intensity of atmospheric turbulence (i.e., wind motion at very small time scales that acts to disperse gas and particles rather than transport them downwind), and mixing layer. Atmospheric turbulence often cannot be measured directly and is estimated by the atmospheric stability. Atmospheric stability is the thermal stratification or vertical temperature structure of the atmosphere. The more unstable the atmosphere, the more atmospheric turbulence.

Conditions are favorable for dispersion when (1) the atmosphere is considered to be unstable or neutral, (2) the winds are moderate to strong, and (3) the mixing layer is deep. These three conditions are most common in the summer when neutral and unstable stratification exists about 56% of the time (PNL-4622). Less favorable dispersion conditions may occur when the wind speed is light and the mixing layer is shallow. Less favorable conditions are most common during the winter when moderately to extremely stable stratification exists about 66% of the time (PNL-4622). Less favorable conditions also occur periodically for surface and low-level releases in all seasons from around sunset to around an hour after sunrise as a result of ground-based temperature inversions and shallow mixing layers. There are occasional extended periods of poor dispersion conditions associated with stagnant air in stationary high-pressure systems, primarily during the winter months (PNL-4622). Table C1-13 provides a summary of the mixing-layer thicknesses by season and time of day.

Estimates of the probability of extended periods of poor dispersion conditions are documented in BNWL-1605. The probability of an inversion, once established, persisting more than 12 hours varies from a low of about 10% in May and June to a high of about 64% in September and October. These probabilities decrease rapidly for durations of more than 12 hours. Table C1-14 contains percentages of the probabilities (percent) associated with extended periods of surface-based inversions.

To estimate atmospheric diffusion factors, the dispersion models used in the TWRS facility accident analyses required a joint frequency distribution of wind speed, wind direction, and atmospheric stability. Tables C1-15 and C1-16 present the joint frequency distribution of hourly averaged wind data collected at the 200 East and 200 West Areas from January 1983 to December 1991. Before March 1983, atmospheric stability was determined at the HMS on the basis of sky cover or wind speed (Pasquill 1961, "The Estimation of the Dispersion of Windborne Material"). Since March 1983, atmospheric stabilities have been determined by using the U.S. Nuclear Regulatory Commission temperature gradient method (NUREG 1.23, *Onsite Meteorological Programs*).

The frequency of each stability class that occurred at the 200 East and 200 West Areas during the years 1983 to 1991 is listed in Table C1-17.

Stability Class D, relatively neutral diffusion conditions, occurred 28% of the time. Conditions favorable for turbulent dispersion, represented by the unstable classes A, B, and C, occurred about 23% of the time. Classes E, F, and G, indicative of conditions unfavorable for turbulent dispersion, occurred about 49% of the time.

Graphical representations of the wind direction and wind speed distribution at the 200 East and 200 West Areas are shown in Figures C1-18 and C1-19. For the 200 East Area, winds from the west-northwest occur most frequently (about 20% of the time). Winds out of the northwest and west also occur with a relatively high frequency (12% and 11%, respectively). For the 200 West Area, winds out of the west-northwest (15% of the time), northwest (15% of the time), and west (12% of the time) occur most frequently. For the hours of unstable conditions (stability classes A, B, and C), winds from the northwest occur most frequently in the 200 East and 200 West Areas, and for the hours of stable conditions (classes E, F, and G), winds from the west-northwest occur most frequently.

C1.4.2 Hydrology

This section presents the hydrostratigraphy (water and soil characteristics) of the Hanford Site, focusing on the characteristics of the unsaturated zone or vadose zone and the saturated zone or groundwater. Summary discussions of actual or estimated liquid plume travel times through the zones are included. These discussions are based on observed data for known release locations and release mechanisms. Section C1.4.3 for a detailed discussion of Hanford Site geology.

This hydrostratigraphy data has been used in the TWRS facilities hazards and accident analyses to evaluate releases to the soil column. The data has been used to model and calculate the consequences of associated surface pools (i.e., infiltration), near-surface plumes (i.e., adsorption), or deep underground plumes (i.e., travel times through the unsaturated and saturated zones).

The Columbia River and its tributary, the Yakima River, are the primary Hanford Site surface water features (Figure C1-20). West Lake, about 0.04 km^2 (0.02 mi^2) and less than 1 m (3 ft) deep, is the only natural lake on the Hanford Site. Artificial surface water bodies include ponds and ditches created and used for wastewater disposal.

The vadose zone (i.e., zone of unsaturated sediments between the water table and the ground surface) at the Hanford Site is comprised mainly of unconsolidated gravels and sands. The thickness of the vadose zone ranges from 0 m (0 ft) at the Columbia River bank and West Lake to more than 100 m (328 ft) at the 200 East and 200 West Areas.

Saturated sediments make up a series of aquifers (i.e., permeable bodies of rock) and aquitards (i.e., beds of low permeability adjacent to an aquifer). Sand- and gravel-dominated stratigraphic units form aquifers, and fine-grained deposits form aquitards. The shallowest suprabasalt aquifer is unconfined beneath most of the Hanford Site. Confined aquifers are present in sedimentary interbeds and interflow zones between dense basalt flows. The

main water-bearing portions of the interflow zones are networks of interconnecting vesicles and fractures of the flow tops and flow bottoms.

C1.4.2.1 Surface Water. An overview of flood potential from natural and artificial surface water bodies in and around the 200 East and 200 West Areas is presented in the following subsections.

C1.4.2.1.1 Columbia River. The Columbia River originates in the mountains of eastern British Columbia, Canada, and drains an area of approximately 70,800 km^2 (27,300 mi^2) en route to the Pacific Ocean (Figure C1-21). The average annual flow of the Columbia River is 1.1×10^{11} m^3 (3.9×10^{12} ft^3) where it enters the Hanford Site and 1.6×10^{11} m^3 (5.6×10^{12} ft^3) where it exits the Site. The river elevation is approximately 120 m (396 ft) near the 100-B and -C Area and approximately 104 m (343 ft) at the 300 Area (Figure C1-4 for area locations).

PNL-7500, *1988 Hanford Riverbank Springs Characterization Report*, contains a comparison of Columbia River water quality upstream and downstream of the Hanford Site. Most radioactive constituents were not detected or were detected in similar concentrations at both sampling locations. Only tritium and technetium-99 concentrations were higher downstream than upstream. Tritium was measured at 580 $\pm$180 pCi/L at the downstream location, compared with 180 $\pm$170 pCi/L upstream. The minimum (0.6 $\pm$1.2 pCi/L) and maximum (1.8 $\pm$1.2 pCi/L) levels of technetium overlapped; therefore, no environmental impact from technetium is apparent.

Flow on the Columbia River is regulated by three upstream dams in Canada and by seven upstream dams in the United States (Figure C1-21). The Hanford Reach, approximately 81 km (50 mi) in length, extends from Priest Rapids Dam to just north of the 300 Area. Flow through the Hanford Reach fluctuates significantly and is controlled at Priest Rapids Dam. The three dams with the largest reservoirs upstream from the Hanford Site are the Mica and Hugh Keenleyside dams in Canada and the Grand Coulee dam in the United States. The controlled flow of the Columbia River caused by these dams results in a lower flood hazard for high-probability floods (e.g., 100-year floods); however, dam-failure scenarios are significant contributors that result in high flood flows.

The U.S. Army Corps of Engineers evaluated a number of scenarios on the effects of failures of Grand Coulee Dam, assuming flow conditions on the order of 11,000 m^3/s (400,000 ft^3/s). The discharge resulting from a 50% breach at the outfall of Grand Coulee Dam was determined to be 600,000 m^3/s (21 million ft^3/s). No determinations were made for breaches greater than 50% of Grand Coulee, for failures of dams upstream, or for associated failures downstream of Grand Coulee. The 50% scenario was believed to represent the largest realistically conceivable flow resulting from either a natural or human-induced breach (DOE-RW-0070).

A flood scenario of a 50% breach of Grand Coulee dam results in a flood level of about 143 m (470 ft) above mean sea level at Columbia River mile 365; this low point is the closest flood route to the 200 Areas Plateau (Figure C1-22). River mile 365 is about 46 m (150 ft) below the ground surface of the lowest elevation tank farm. The 50% breach of the Grand Coulee Dam would not impact the 200 East and 200 West Areas or the land within the

600 Area (i.e., between the 200 East and 200 West Areas) occupied by TWRS. Therefore, this scenario bounds all other Columbia River flood scenarios. UCRL-21069, *Probabilistic Flood Hazard Assessment for the N Reactor, Hanford, Washington* provides a detailed hazard assessment of other flood scenarios.

C1.4.2.1.2 Yakima River. The Yakima River is approximately 20 km (12 mi) south of and greater than 60 m (200 ft) in elevation below the 200 East and 200 West Areas. The Yakima River is not a flood hazard for the TWRS facilities.

C1.4.2.1.3 Cold Creek. Cold Creek and its tributary, Dry Creek, are ephemeral, discontinuous streams in the Yakima River drainage basin (Figure C1-23). The Cold Creek watershed, located in the southwestern portion of the Hanford Site, extends about 16 km (10 mi) up the Cold Creek and Dry Creek valleys. A flood risk analysis of Cold Creek, documented in RHO-BWI-C-120, *Flood Risk Analysis of Cold Creek Near the Hanford Site*, was conducted in 1980 to determine the probable maximum precipitation flood for the Cold Creek system. A map of the extent of the probable maximum flood determined in the risk analysis is presented in Figure C1-23. A recurrence interval is not estimated for this flood, but any occurrence would be a flash flood of short duration. The postulated probable maximum precipitation flood reaches an elevation of about 195 m (640 ft) above mean sea level on the southwestern portion of 200 West Area. Because the surface elevation of the lowest elevation tank farms (i.e., 241-S, 241-SY, 241-SX, 241-U) is 201 to 204 m (660 to 670 ft) above mean sea level, surface flooding is not anticipated; however, the bottoms of the tanks are below the flood level. Because of the expected short duration of a flash flood, a significant rise in the water table in these areas is not anticipated, therefore, some contaminants from previous waste leak discharges may be mobilized but the tanks would not be impacted.

C1.4.2.1.4 Artificial Waterbodies. In the past, there were numerous artificial surface water bodies (e.g., cribs, ditches, ponds) in the 200 East and 200 West Areas. Effluent disposal wastewater infiltrated the ground and, in many instances, affected groundwater flow and chemistry. Today, only B Pond and the Treated Effluent Disposal Facility located east of 200 East Area and the state-approved land disposal site located in the 200 West Area receive significant volumes of effluent.

C1.4.2.2 Vadose Zone. The vadose zone in the 200 West Area is comprised of interlayered gravel, sand, and silt. The thickness of the vadose zone ranges from less than 50 m (164 ft) near the southwest corner to more than 100 m (328 ft) in the northwest corner of the 200 West Area (DOE/RL-93-88, *Hydrogeologic Setting of the 200 Areas*). The fine-grained units beneath the 200 West Area produced perched water units (i.e., saturated portions of the vadose zone) near liquid waste disposal facilities when those facilities were active. The Plio-Pleistocene/Early Palouse soils interval appears to be the primary perching unit throughout the 200 West Area. The lower fine-grained sequence of the Hanford formation also may have produced perched water near active facilities in south 200 West Area. Perched water was observed during well drilling near the 216-U-14 ditch, the 216-Z-20 crib, and the

216-Z-21 seepage basin. See Figure C1-24 for a graphical representation of characteristic Hanford Site stratigraphy, lithology, and hydrogeologic conditions.

The vadose zone in the 200 East Area is comprised of interlayered gravel, sand, silt, and "mud" (i.e., silt and clay). In some 200 East Area locations, the basalt has been uplifted and comprises part of the vadose zone. Thickness of the vadose zone in the 200 East Area ranges from 37 m (122 ft) near B Pond to 104 m (341 ft) near the southern border of the area (DOE/RL-93-88). Fine-grained units in the Hanford formation and the Ringold Formation Lower Mud unit significantly influence the lateral distribution and flux of water in the 200 East Area.

Flow rate of water through the vadose zone is a function of the moisture content, matrix potential, and unsaturated hydraulic conductivity for each hydrostratigraphic unit. Water generally flows and spreads laterally at a much greater rate in fine-grained units than in coarse-grained units. Fine-grained units in the vadose zone significantly influence the lateral distribution of water and the flux of water to the uppermost aquifer. Coarse-grained units may impede the flux of water through the vadose zone because of the formation of a capillary pressure barrier between the coarse-grained units and overlying fine-grained units.

The fine-grained sedimentary units in the 200 East Area may produce perched water conditions near active waste disposal facilities. Perched water has been observed to the east of the 241-BY Tank Farm and above the Lower Mud unit near B Pond and the Treated Effluent Disposal Facility (DOE-RL-93-88).

Two sources of data were used to estimate the magnitude of recharge from natural precipitation on the 200 Areas Plateau: (1) moisture accumulation in an 18-m- (59-ft-) deep 200 East Area lysimeter for 13 years, and (2) distribution of cesium-137 in a solid-waste burial ground (200 West Area) in which contaminated soil had been buried for 10 years (Routson and Johnson 1990, "Recharge for the Hanford Site 200 Areas Plateau"). There had been no detectible moisture accumulation in the bottom of the lysimeter since 1972. The recharge rate was approximately zero over the 13-year period. Soil contaminated with cesium was placed in a burial ground in 1970. After 10 years, the distribution of cesium was determined from core-drilled samples. No cesium above the background level for the burial ground was detected beneath the bottom of the trench, indicating there was no measurable downward movement. Cesium was detected above the trench, most likely from evapotranspiration.

Under natural, minimally disturbed conditions, there appears to be little potential for downward movement of contaminants in the upper vadose zone beneath the 200 Areas Plateau (Routson and Johnson 1990). However, highly disturbed sites with little vegetation (e.g., the tank farms) may allow more movement of water through the vadose zone. The addition of water from effluent disposal or leaks could also increase recharge.

PNL-10285, *Estimated Recharge Rates at the Hanford Site*, and PNL-10508, *Estimation of Natural Ground Water Recharge for the Performance of a Low-Level Waste Disposal Facility at the Hanford Site*, summarize recent recharge studies. The results of the two reports are consistent with those of the

earlier Routson and Johnson (1990) studies and indicate recharge rates that vary from near zero in vegetated fine-grained soils to greater than 100.0 mm/yr (3.9 in./yr) in course-grained unvegetated soils similar to the gravel cover used in tank farm sites.

Recharge estimates using chloride and chlorine-36 as tracers indicate very low rates of recharge in undisturbed areas of the Hanford Site (Murphy et al. 1994, "Evaluation of Net Residual Fluxes Determined by Chloride Mass Balance in the Pasco Basin, Southeastern Washington"; USGS 1995a, *Using Chloride and Chlorine-36 as Soil-Water Tracers to Estimate Deep Percolation at Selected Locations on the U.S. Department of Energy Hanford Site, Washington*). Recharge rates estimated from tracer studies are similar to, but are generally lower than, results presented in PNL-10285 and PNL-10508.

A groundwater impact assessment of the 216-U-14 ditch in the 200 West Area includes a study of infiltration rates and travel times through the vadose zone (WHC-EP-0698, *Groundwater Impact Assessment Report for the 216-U-14 Ditch*). Conclusions of the study include the following.

- There is a zone of perched water near the ditch that is up to 17-m- (56-ft-) thick beneath the east portion and 1- to 2-m- (3- to 7-ft-) thick beneath the west portion of the ditch. The water appears to perch on the lower fine-grained unit of the Hanford formation at a depth of approximately 20 to 40 m (66 to 131 ft).

- Changes to the perched water level virtually coincide with changes in the effluent discharge rate, indicating there was a rapid travel time when discharge rates were high.

- The perched zone dissipates when effluent discharge rates decrease to less than 586 L/min (155 gal/min).

- When discharge was 1,363 L/min (360 gal/min), the water table rose 0.5 m (1.6 ft).

- Infiltration rates for the ditch ranges from 15 to 622 m/yr (49 to 2,040 ft/yr) during its period of use.

Infiltration rates estimated for several disposal facilities in the 200 West Area range from 37 to 2,825 m/yr (121 to 9,266 ft/yr) (Swanson 1994, *Infiltration Rate and Hydraulic Conductivity Results*; Law 1993, *Infiltration Rates at the Preferred Soil Column Disposal Site*). See Table C1-18 for a list of these rates. The wide range is assumed to be caused by variables such as the presence of caliche layers and the clogging of pores with fine sediments over time.

A one-dimensional unit-gradient model, originally developed in 1990, has been revised to include soil profiles characterized by using wells near the ditch. An infiltration rate of 74 m/yr (243 ft/yr) is modelled, and the rate is one-half the design infiltration capacity for most cribs, ponds, and ditches in the 200 East and 200 West Areas. Estimated time for moisture to reach the unconfined aquifer ranges from 117 to 165 years. Most of the travel time is accounted for by one fine-grained sedimentary unit in the Hanford

formation. Sediment testing shows a highly variable hydraulic conductivity for that unit. When a higher conductivity is input to the model, the travel time is approximately six years.

A groundwater model designed for the 216-U-17 crib suggests that lateral spreading of moisture, caused by layering of sediments, is the most significant factor in distribution of moisture and contaminants (Reidel et al. 1993, *Groundwater Impact Assessment for the 216-U-17 Crib, 200 West Area*). By the time the simulated wetting front in the U-17 crib model reached the water table, the volume of moistened soil was broader and more diffuse than previously predicted for other crib sites.

Site-specific variables must be considered when estimating time for water to travel through the vadose zone. Variables include the amount of moisture infiltrating, the grain size and stratigraphy of the sediments, the amount of moisture already in each sedimentary layer, and hydraulic conductivity. WHC-SD-EN-TI-014, *Hydrogeologic Model for 200 West Groundwater Aggregate Area*, contains calculation travel times in four example cases with steady recharge rates of 5 and 50 mm/yr (0.2 and 2.0 in./yr). Calculated travel times range from 150 years to more than 2,000 years. The methods applied in WHC-SD-EN-TI-014 are not valid for transient conditions (e.g., spill, pipe leak).

The fate of a potential leak from a tank or a diversion box depends on the stratigraphy at the leak location. The presence of fine-grained layers in the shallow vadose zone causes the leaked effluent to remain near the leak site vertically and to diffuse horizontally. The effluent migrates downward more rapidly without spreading laterally if sediments near a leak source are coarse grained. Tables C1-19 and C1-20 provide a description of the hydrogeologic properties of the partially saturated and saturated vadose zones in the 200 East and 200 West Areas (PNL-10550, *Environmental Settings for Selected U.S. Department of Energy Installations - Support Information for the Programmatic Environmental Impact Statement and the Baseline Environmental Management Report*).

A conceptual model of hypothetical sources of waste leaks and of potential pathways for leaked waste to reach groundwater is illustrated in Figure C1-25. The model was developed on the basis of observed vadose zone and groundwater measurements near tanks that are known to have leaked. Contaminants may spread laterally when they encounter an increase in sediment compaction or a decrease in grain size. Most of the radioactive contamination from a leak remains in the unsaturated zone. Potential pathways to groundwater include old monitoring wells without seals between casing and sediments, clastic dikes, and discontinuities in the caliche layer (Section C1.4.3). The most mobile constituents (e.g., tritium and technetium) have the highest potential for reaching groundwater.

Travel time through the vadose zone to the Columbia River is difficult to calculate accurately, even with the most sophisticated available models because of the nonlinear variation of hydraulic conductivity with moisture content. Many simplifying assumptions have been made at the Hanford Site in applying vadose zone models. For these reasons, there is a large amount of uncertainty in travel time calculations for the vadose zone. Recent information on contaminants beneath tanks shows that some previously

calculated and modeled travel times through the vadose zone for both nonretarded and retarded species may be incorrect.

Assuming that the technetium-99, that appeared in the aquifer beneath the 241-SX Tank Farm during the late 1980s was from tank leaks that occurred in the 1950s and 1960s, the best conservative estimate of travel time through the vadose zone for nonretarded contaminants is 25 to 30 years. Contaminants may have been transported through improperly sealed wells or driven to the aquifer by water from the 216-S-25 crib. About 3.0×10^7 L (8.0×10^6 gal) of water were pumped to the 216-S-25 crib in 1985. Low-permeability layers in the vadose zone may have caused the infiltrating water to travel horizontally through the vadose zone to the area beneath the 241-SX Tank Farm and mobilize contaminants in the vadose zone. The source of the technetium-99 and the migration of other contaminants through the vadose zone at the 241-SX Tank Farm is being investigated.

Travel time through the aquifer is much easier to determine than travel through the vadose zone. Groundwater flow through the saturated zone is easier to model and, at the Hanford Site, the historical movement of plumes in the groundwater provides direct information on travel times and a set of data that can be used to calibrate flow and transport models. Groundwater velocity (average pore velocity) through the aquifer from the 200 East Area is 3.3 m/day (11 ft/day) based on the movement of the tritium plume from the Plutonium Uranium Extraction (PUREX) Facility cribs to well 699-24-33. This results in a travel time of approximately 16 years from the 200 East Area to the Columbia River (PNL-10550). Travel time from the 200 West Area is greater because of the lower permeability of sediments in the vicinity of the 200 West Area. The average pore velocity near 200 West Area is calculated at 0.2 m/day (0.7 ft/day) based on movement of the nitrate plume in this area. The travel time from 200 West Area tank farms to the more permeable sediments near 200 East Area is calculated at 55 years (PNL-10550), and the total travel time to the Columbia River is calculated at 71 years (i.e., 16 years through groundwater and 55 years through the vadose zone). These estimates are comparable to those of USGS 1987a, *Subsurface Transport of Radionuclides in Shallow Deposits of the Hanford Nuclear Reservation - Review of Selected Previous Work and Suggestions for Further Study*, and PNL-6328, *Estimation of Ground-Water Travel Time at the Hanford Site: Description, Past Work, and Future Needs*, which estimate 10 to 20 years and 21 to 23 years, respectively, from the 200 East Area to the Columbia River. ARH-ST-149, *Hanford Pathline Calculational Program - Theory, Error Analysis and Applications*, estimates a minimum of 27 years from 200 East Area and 84 years from 200 West Area on the basis of modeling. Assuming vadose travel times of 25 to 30 years, the estimated travel times from the 200 East and 200 West Areas to the Columbia River are roughly 45 and 100 years, respectively.

C1.4.2.3 Aquifers. Two major aquifer systems, the suprabasalt aquifer system and the basalt and interbed aquifer system, lie beneath the 200 East and 200 West Areas (Figure C1-24). The stratigraphy of the 200 East and 200 West Areas is discussed in greater detail in Section C1.4.3.

C1.4.2.3.1 Suprabasalt Aquifer System. The suprabasalt aquifer system at the 200 East and 200 West Areas occurs primarily in the Ringold Formation and Hanford formation stratigraphic segments. The sediment in these segments contains interlayered coarse- and fine-grained units, forming a series of

aquifers and aquitards. The depth to the water table below the ground surface ranges from less than 40 m (131 ft) near B Pond in the 200 East Area to approximately 104 m (341 ft) west of 200 East Area.

The suprabasalt aquifer system occurs primarily below the surface in the 200 West Area. The uppermost part of the aquifer is unconfined in a sand and gravel unit and is more than 75-m (246-ft) thick (WHC-SD-ER-TI-003, *Geology and Hydrology of Hanford Site: A Standardized Text for Use in Westinghouse Hanford Company Documents and Reports*). The lower part of the aquifer sediments is generally confined by fine-grained sediments of the Lower Mud unit stratigraphic segment. The thickness of this confined zone ranges from less than 6 m (20 ft) beneath the northern portion of the 200 West Area to greater than 15 m (49 ft) in the southern portion of that area (PNL-6820, *Hydrogeology of the 200 Areas Low Level Burial Grounds*). The entire suprabasalt aquifer system is unconfined in the northern portion of the 200 West Area.

The suprabasalt aquifer system at the 200 East Area occurs in the Ringold Formation and parts of the Hanford formation. The suprabasalt aquifer system ranges in thickness from zero where basalt is present above the water table to 60 m (197 ft) in the south and west portions of the 200 East Area.

Horizontal hydraulic conductivity of units within the suprabasalt aquifer system varies considerably (Table C1-21). WHC-SD-EN-TI-019, *Hydrogeologic Model for the 200 East Groundwater Aggregate Area*, compiles and maps hydraulic conductivity data for the upper portion of the uppermost aquifer in the 200 East and 200 West Areas. The highest conductivity occurs in a channel stretching northwest to southeast across the 200 East Area.

Groundwater flow beneath the 200 East Area is complex because of the convergence of flow from the natural groundwater flow system from the west and the artificial recharge from B Pond from the east. The high transmissivity beneath most of the 200 East Area causes hydraulic gradients to be very small. Groundwater in the suprabasalt aquifer generally flows from west to east beneath the 200 West Area. Figure C1-26 shows groundwater contours and steady streamlines from the 200 East and 200 West Areas waste sites to the Columbia River. Contaminant plume maps of the 200 East and 200 West Areas indicate long-term trends in groundwater flow directions and indicate a north to northwest direction of flow in the extreme north central portion of the 200 East Area and a south to southeast direction of flow in the southeast portion of the 200 East Area (BNWL-2000, "An Investigation of Regional Flow Patterns Over an Area of Complex Terrain").

Groundwater in the suprabasalt aquifer system at the 200 East and 200 West Areas is contaminated with various hazardous and radioactive constituents. The most significant contaminants include nitrate, carbon tetrachloride, tritium, and technetium (BNWL-2000). PNL-6328 compiles various estimates of groundwater travel times from the 200 East and 200 West Areas to the Columbia River.

C1.4.2.3.2 Basalt and Interbed Aquifer System. The basalt flows and associated sedimentary interbeds form a series of aquifers and aquitards. The dense basalt flows generally form aquitards and interflow zones (fractured basalt zones), and the sedimentary interbeds form aquifers. The uppermost

extensive confined aquifer beneath the 200 East and 200 West Areas is comprised of a single interbed and adjacent interflow zones. The interbed, called the Rattlesnake Ridge interbed, is 15- to 25-m (49- to 82-ft) thick beneath the 200 East and 200 West Areas and generally thickens toward the west (RHO-ST-42, *Hydrology of the Separations Area*; RHO-RE-ST-12P, *An Assessment of Aquifer Intercommunication with B Pond-Gable Mountain Pond Area of the Hanford Site*). Recharge to the Rattlesnake Ridge interbed aquifer occurs in the higher elevations to the west, north, and northeast of the 200 East and 200 West Areas. Groundwater generally flows toward the west to west-northwest beneath the 200 East Area and toward the northeast beneath the 200 West Area (WHC-SD-ER-TI-003).

The Rattlesnake Ridge interbed aquifer is generally separated from the uppermost aquifer system by a segment of the basalt flow known as the Elephant Mountain Member that is up to 35-m (115-ft) thick. The segment of the Elephant Mountain Member north of the 200 East Area has been locally removed by erosion. Erosion of this member has allowed for hydraulic communication between the interbed aquifer and the suprabasalt aquifer system. Contamination found in the Rattlesnake Ridge interbed aquifer results from intercommunication through erosional windows between the interbed and the overlying unconfined aquifer (RHO-RE-ST-12P). Transmissivity rates of the Rattlesnake Ridge interbed and the Elephant Mountain interflow zone are included in Table C1-21.

C1.4.3 Geology

This section provides a summary of the geologic processes that have occurred and continue to occur in and around the Hanford Site. Included are discussions summarizing historical and recent geologic events that have defined the Site stratigraphy as it relates to the geohydrological and seismic characteristics. These events include volcanism, flooding, and tectonic deformation (seismic). The Site stratigraphy, developed from borehole data, provides the bases for the conclusions and observations of the liquid plume travel times through the saturated and unsaturated zones discussed in Section C1.4.2. The structural and seismic data is used to identify and develop a seismic hazard evaluation in accordance with the guidance provided in DOE-STD-1023-95. The volcanic activity discussion provides data used in the volcanic hazard evaluation to be used in accident analyses (i.e., roof loading and loss of high-efficiency particulate air filters).

The Hanford Site lies in the Pasco Basin, one of the largest sub-basins of the Columbia Plateau. The Columbia Plateau is a broad plain situated between the Cascade Range to the west and the Rocky Mountains to the east (Figure C1-27). There are no nearby mountains to the north or south. The Columbia Plateau is often called the Columbia Basin. In the central and western sections of the Columbia Basin, the Miocene Epoch Columbia River Basalt Group (CRBG) is underlain predominantly by continental sedimentary rocks from the Tertiary Period and overlain by fluvial and glaciofluvial deposits from the Tertiary and Quaternary Periods.

C1.4.3.1 Physiography. The physiography of the Hanford Site is dominated by the low-relief plains of the Central Plains physiographic region and the anticlinal ridges of the Yakima Folds physiographic region (Figure C1-28).

The physiography of the Columbia Basin is the result of late Cenozoic faulting and folding of the CRBG and overlying sediments of the Ringold Formation. The surface topography of the Site has been modified in the past several million years by geomorphic processes related to (1) Pleistocene Epoch cataclysmic floods, (2) Holocene Epoch eolian activity, (3) continuous landslides, and (4) Columbia River erosion.

C1.4.3.2 Stratigraphy. The stratigraphy of the Pacific Northwest is comprised of a collection of accreted terrane rocks added onto the North American craton between the Precambrian and early Cenozoic Eras that are now mostly covered by Cenozoic Era volcanic rocks. Sedimentary rocks derived from eroding uplands areas are intercalated with the volcanic rocks in structural basins and along the evolving continental margin.

The generalized stratigraphy of the CRBG is shown in Figure C1-29. The principal bedrock of the Hanford Site is basalt and intercalated and overlying sedimentary rocks. Rocks older than the CRBG are exposed primarily along the margin of the Columbia Basin and vary widely in age, lithology, and structure. The complex stratigraphy and structure that underlie the CRBG at the Columbia Basin are the probable sources for seismic hazards under the basalt. Because of the thick basalt cover, the stratigraphy and types of structure under the Hanford Site are poorly constrained. The sedimentary rocks that overlie the CRBG are principally the fluvial deposits of the Ringold Formation and the Pleistocene Epoch cataclysmic flood deposits of the Hanford formation.

C1.4.3.2.1 Columbia River Basalt Group. The CRBG is a series of tholeiitic flood basalt flows that were erupted between 17 and 6 million years ago (Figure C1-29). The CRBG covers approximately 164,000 km^2 (63,304 mi^2) and consists of 280,000 km^3 (67,164 mi^3) of basalt (Tolan et al. 1989, "Revisions to the Estimates of the Areal Extent and Volume of the Columbia River Basalt Group"). The CRBG flows were erupted from north-northwest-trending fissures or linear vent systems in north-central and northeastern Oregon, eastern Washington, and western Idaho (USGS 1979a, *Reconnaissance Geologic Map of the Columbia River Basalt Group in Eastern Washington and Northern Idaho*).

C1.4.3.2.2 Stratigraphy of Intercalated and Overlying Sediments. The Hanford Site is situated on a sequence of sedimentary units that overly the CRBG. These sediments are confined largely to the synclinal valleys and basins of the western Columbia Basin. Although the sedimentary record is incomplete, it is a direct reflection of the structural development of the area (Fecht et al. 1987, "Paleodrainage of the Columbia River System on the Columbia Plateau of Washington State — A Summary"). The upper Miocene Epoch to middle Pliocene Epoch record of the Columbia River system in the Columbia Basin is represented by the upper Ellensburg Formation, Ringold Formation, and Snipes Mountain conglomerate. Except for local deposits (e.g., the Plio-Pleistocene unit and the Early Palouse soils unit) there is a hiatus (i.e., due to erosion or lack of sedimentation) in the stratigraphic record between the end of the Ringold (3.4 million years ago) and the Pleistocene Epoch cataclysmic flood deposits (1.6 million years ago) (DOE-RW-0164, *Site Characterization Plan Reference Repository Location, Hanford Site, Washington*).

Pleistocene Epoch to Recent Epoch sediments overlying the CRBG at the Hanford Site include cataclysmic flood gravels and slackwater sediments of the Hanford formation; terrace gravels of the Columbia River and adjacent rivers (i.e., Snake and Yakima); and eolian deposits.

Late Neogene Sediments. Two main late Neogene Period sedimentary units, the Ellensburg Formation and the Ringold Formation, occur in the Hanford Site region (Figure C1-29). The Ellensburg Formation includes epiclastic and volcaniclastic sedimentary rocks that are intercalated with and overlie the CRBG (Waters 1961, "Stratigraphic and Lithologic Variations in the Columbia River Basalt"; USGS 1979b, *Revisions in Stratigraphic Nomenclature of the Columbia River Basalt Group*). At the Hanford Site, the Ellensburg Formation is mixed with sediments deposited by the ancestral Clearwater and Columbia Rivers. The stratigraphy of the Ellensburg Formation at the Hanford Site is discussed in RHO-BWI-ST-14, *Subsurface Geology of the Cold Creek Syncline*, and Fecht et al. (1987).

Fluvial sediments of the Ringold Formation were those that continued to be deposited in most synclinal valleys of the central Columbia Basin long after the eruptions of the CRBG. Although exposures of the Ringold Formation are limited to the White Bluffs on the east side of the Hanford Site and isolated exposures on the west side, extensive data on the Ringold Formation is available from boreholes at the Hanford Site.

The Ringold Formation consists of semi-indurated clay, silt, pedogenically altered sediment, fine- to coarse-grained sand, and granule-to-cobble gravel layers. Strata of the Ringold Formation are typically below the water table. The textural variations of the strata influence groundwater flow.

The upper part of the Ringold Formation consists of a sequence of fluvial sands, overbank deposits, and lacustrine sediments. The fluvial sand facies is the principal facies of the upper Ringold Formation under the tank farms. The fluvial sand facies consists of quartzo-feldspathic, cross-bedded, and cross-laminated sands that are intercalated with lenticular silty sands, clays, and thin gravels. These sands usually contain less than 15% basalt lithic fragments and fining upwards sequences are common. Strata were deposited in wide, shallow channels.

C1.4.3.2.3 Quaternary Period Stratigraphy. Sediment layers of the Quaternary Period, as thick as 100 m (328 ft) in the Pasco Basin, overlie the Ringold Formation and are the main layers beneath the tank farms. In the Hanford formation, the most extensive Quaternary Period layer is the Pleistocene-aged cataclysmic flood deposits (Figure C1-30). The Hanford formation and underlying Ringold Formation are separated locally by several laterally discontinuous and informally defined units.

Fluvial deposits from major rivers (i.e., Yakima, Snake, Columbia) are represented in the Pasco Basin, dating since at least the late Tertiary Period (Baker et al. 1991, "Quaternary Geology of the Columbia Plateau"). Two main alluvial units, the Plio-Pleistocene Epoch unit and the Pre-Missoula gravels unit, are recognized at the Hanford Site. In the central Pasco Basin, mainstream alluvium lies stratigraphically between the Ringold Formation and the Hanford formation. The Pre-Missoula gravels unit, a thick sheet of

well-rounded and well-sorted gravel, disconformably overlies the Ringold Formation in much of the central Pasco Basin. This unit is interpreted to be of the early Pleistocene Epoch on the basis of magnetic polarity and stratigraphic position. The mainstream alluvium of probable early Pleistocene Epoch is exposed along Cold Creek and the Yakima Bluffs.

Overlying the tilted and truncated Ringold Formation in an unconformable relationship, the western Cold Creek syncline (near the 200 West Area) is the laterally discontinuous Plio-Pleistocene unit (DOE-RW-0164). The Plio-Pleistocene unit appears to be correlative to other sidestream alluvial and pedogenic deposits found near the base of the ridges bounding the Pasco Basin on the north, west, and south. These sidestream alluvial and pedogenic deposits are inferred to be of the late Pliocene to early Pleistocene Epoch on the basis of stratigraphic position and magnetic polarity of interfingering loess units.

Eolian Deposits. Loess deposits at the Hanford Site contain a detailed Quaternary record. Five units of the Quaternary record are represented in the Pasco Basin (WHC-MR-0391, *Field Trip Guide to the Hanford Site*). These units are informally referred to as L1 through L5 and are differentiated on the basis of position relative to other stratigraphic units, color, soil development, and paleomagnetic polarity.

The main eolian unit in the subsurface at the Hanford Site is the Early Palouse soils. The Early Palouse soils unit consists of up to 20 m (66 ft) of massive, brown-yellow, compact loess-like silt and minor fine-grained sand (RHO-ST-23, *Geology of the Separations Areas, Hanford Site, South-Central Washington*; RHO-BWI-ST-14; DOE-RW-0164). Granule-sized grains, consisting primarily of basalt, are common in this unit. These deposits overlie the Plio-Pleistocene Epoch unit in the western Cold Creek syncline around the 200 West Area. See Figure C1-30 for a graphic representation of this stratigraphy. The main eolian unit is differentiated from overlying graded rhythmites by greater calcium carbonate content, massive structure in core, and high natural gamma response in geophysical logs (DOE-RW-0164). The upper contact of the eolian unit is poorly defined and the unit may grade up-section into silty strata commonly found in the lower part of the Hanford formation. The unit is inferred to be of the early Pleistocene Epoch on the basis of a predominantly reversed polarity.

The Plio-Pleistocene Epoch deposits and Early Palouse soils form a fine-grained unit in the vadose zone that results in increased lateral spreading of downward moving moisture.

Hanford Formation. Hanford formation is the informal name given to all cataclysmic flood deposits from the Pleistocene Epoch. The Hanford formation is the main stratigraphic unit at the surface of the tank farms. The formation consists of pebble to boulder gravel, fine- to coarse-grained sand, and silt. These deposits are divided into the (1) gravel-dominated, (2) sand-dominated, and (3) silty facies. These facies are referred to as coarse-grained deposits, plane-laminated sand facies, and rhythmite facies, respectively (RHO-BW-SA-563A, *Quaternary Geology of the Pasco Basin, Washington*). The rhythmite facies are also referred to as the "touchet beds." The Hanford formation is thickest in the vicinity of the 200 East and 200 West Areas (up to 65-m- [213-ft-] thick). Hanford formation deposits are absent on

ridges above approximately 385 m (1,263 ft) above sea level, the highest level of cataclysmic flooding in the Pasco Basin (RHO-BW-SA-563A).

Volcanic Ash Deposits. Volcanism in the Cascade Range was active throughout the Pleistocene Epoch and has continued through the Holocene Epoch (10,000 years before present to present). The eruption history of the current Holocene Epoch best characterizes the most likely types of activity in the next 100 years. Many of the Cascade Range volcanoes have been active in the last 10,000 years, including Mount Mazama (Crater Lake) and Mount Hood in Oregon and Mount St. Helens, Mount Adams, and Mount Rainier in Washington. These eruptions are recorded in the Quaternary sediments in the form of ash deposits that are interlayered with the sediments. Maps in Figures C1-31 and C1-32 depict the annual probability of volcanic ash accumulation on the Hanford Site.

C1.4.3.3 History of Cataclysmic Flooding in the Pasco Basin. Cataclysmic floods inundated the Pasco Basin several times during the Pleistocene Epoch when ice dams failed in northern Washington. Net erosion caused by these floods was minimal and is assumed to have been associated with only the earliest floods. Later floods partially incised older flood deposits before backfilling. Deciphering the history of cataclysmic flooding in the Pasco Basin is complicated due to the probable occurrence of numerous smaller individual floods. Evidence for cataclysmic flooding in the Pasco Basin, besides the sediments, includes high-water marks and faint strandlines along the basin margins. Floods from multiple sources and the paths of Missoula floodwaters migrated and changed course with the advance and retreat of the Cordilleran ice sheet. The best preserved cataclysmic flood record is that of the last Missoula flood, which apparently came down the Columbia River.

C1.4.3.4 Geologic Structures of the Columbia Basin. The geologic structure of the Pacific Northwest is controlled by a basement rock assemblage of accreted terranes fused onto the structurally complex North American craton from the early Mesozoic to early Cenozoic Eras. The accreted terranes form the backbone of the Cascade Range, Okanogan Highlands, and the Blue Mountains. The terranes are now extensively covered by Cenozoic Era rocks that were folded and faulted in a north-south-oriented compressive regime. North-south compression is continuing in the Pacific Northwest east of the Cascades. This pattern of Cenozoic Era deformation is expected to continue into the future.

The Columbia Basin is a structurally and topographically low area surrounded by mountains ranging in age from the late Mesozoic Era to Recent Epoch. The Columbia Basin has two major structural subdivisions or subprovinces: the Yakima Fold Belt (YFB) and the Palouse Slope (Figure C1-28). The YFB is a series of anticlinal ridges and synclinal valleys in the western and central Columbia Basin. The Hanford Site is in the east part of the YFB. The Palouse Slope forms the eastern part of the Columbia Basin and is mainly a westward-tilting paleoslope. The west boundary of the Palouse Slope is at the east boundary of the Hanford Site.

C1.4.3.4.1 Major Structural Features of the Columbia Basin. Three major structural features cross-cut the Columbia Basin and influence the geology of the Hanford Site. These are the Olympic-Wallowa lineament, the Hog Ranch-Naneum Ridge anticline, and the YFB. The Olympic-Wallowa lineament passes along the southern boundary of the Hanford Site and the Hog

Ranch-Naneum Ridge anticline forms the western structural boundary of the Pasco Basin. A map of these major structural features of the YFB is shown in Figure C1-33.

Olympic-Wallowa Lineament. The Olympic-Wallowa lineament (Figure C1-33) is a major topographic feature in Washington and Oregon that crosscuts the Columbia Basin and forms the southern boundary of the Hanford Site. The alignment of the topographic features of this lineament parallels prebasalt structural trends along the northwest margin of the Columbia Basin, but it has not been linked to any individual structure (Campbell 1989, *Structural and Stratigraphic Interpretation of Rocks Under the Yakima Fold Belt, Columbia Basin, Based on Recent Surface Mapping and Well Detail*; Reidel and Campbell 1989, "Structure of the Yakima Fold Belt, Central Washington").

The portion of the Olympic-Wallowa lineament that crosses the Columbia Basin is called the Cle Elum-Wallula lineament (Keinle et al. 1978, "Geologic Reconnaissance in the Cle Elum-Wallula Lineament and Related Structures"). It is a 10-km- (6-mi-) wide, moderately diffuse zone of anticlines that have a N 50° W orientation. As defined in Keinle et al. (1978), the Cle Elum-Wallula lineament consists of three structural parts: (1) a broad zone of deflected or anomalous fold and fault trends extending south from the City of Cle Elum to Rattlesnake Mountain; (2) a narrow belt of topographically aligned domes and doubly plunging anticlines extending from Rattlesnake Mountain to Wallula Gap; and (3) the Wallula fault zone extending from Wallula Gap to the Blue Mountains.

The structural significance of the Olympic-Wallowa lineament has been called into question by two recent geophysical studies. Neither a seismic profiling survey nor a gravity survey revealed any obvious geophysical signatures of this lineament below the CRBG (Jarchow 1991, *Investigations of Magmatic Underplating Beneath the Northwestern Basin and Range Province, Nevada, Seismic Data Acquisition and Tectonic Problems of the Columbia Plateau, Washington and the Nature of the Mohorovicic Discontinuity Worldwide*).

Hog Ranch-Naneum Ridge Anticline. The western structural boundary of the Pasco Basin is the Hog Ranch-Naneum Ridge anticline (Figure C1-33). This anticline is a broad south-trending anticline in the CRBG that crosses the YFB in a north-south direction. This south plunging structure passes through five YFB folds and the Olympic-Wallowa lineament. The Hog Ranch-Naneum Ridge anticline was active in the late to middle Miocene Epoch as demonstrated by thinning of basalt flows across it (Reidel et al. 1989, "The Geologic Evolution of the Central Columbia Plateau"). The east-trending YFB folds show no apparent offset by the cross-structure (Campbell 1989; Keinle et al. 1978; Reidel et al. 1989) nor is the Hog Ranch-Naneum Ridge anticline offset where the Olympic-Wallowa lineament and Cle Elum-Wallula lineament cross it. Growth of the Hog Ranch-Naneum Ridge anticline continued from the Miocene Epoch to Recent Epoch and is now marked by the highest structural points along the ridges that cross it.

Yakima Fold Belt. The YFB subprovince covers about 14,000 km^2 (5,404 mi^2) of the western Columbia Basin (Figure C1-33). The YFB formed as basalt flows and intercalated sediments were folded and faulted under north-south directed compression. The Pasco Basin is near the eastern border

of the YFB. The YFB gives the Hanford Site its principal physiographic features and has been the primary structure influencing Hanford Site geohydrologic conditions.

C1.4.3.4.2 Structure of the Hanford Site. The Cold Creek syncline, shown in Figure C1-33, lies between the Umtanum Ridge-Gable Mountain uplift and the Yakima Ridge uplift and is an asymmetric and relatively flat-bottomed structure. The 200 East and 200 West Areas lie on the northern flank of the Cold Creek syncline where the bedrock dips approximately 5° to the south. The 300 Area lies at the east end of the Cold Creek syncline where it merges with the Pasco Basin syncline.

The Wahluke syncline is the principal structural unit that underlies the 100 Areas (Figure C1-34). The Wahluke syncline is an asymmetric and relatively flat-bottomed structure similar to the Cold Creek syncline. The northern limb dips approximately 5° to the south. The steepest limb of the Wahluke syncline is adjacent to the Umtanum Ridge-Gable Mountain structure.

The Umtanum Ridge-Gable Mountain structural trend is a segmented anticlinal ridge extending for a length of 110 km (68 mi) in an east-west direction and passes north of the 200 East, 200 West, and 300 Areas and south of the 100 Areas. The Umtanum Ridge plunges from west to east and joins the Gable Mountain-Gable Butte segment just east of the west boundary of the Hanford Site. The easternmost segment of the Umtanum Ridge, the Southeast anticline, trends southeast off the east boundary of the Gable Mountain-Gable Butte segment.

The 200 East, 200 West, and 300 Areas are situated on the south flank of the Umtanum Ridge-Gable Mountain anticline where the Miocene-aged basalt bedrock dips to the southwest into the Cold Creek syncline. The 100 Areas lie north of the Umtanum Ridge-Gable Mountain anticline in the Wahluke syncline. The deepest parts of the Cold Creek syncline, the Wye Barricade depression and the Cold Creek depression, are approximately 12 km (8 mi) southeast of the 200 East and 200 West Areas. The Cold Creek syncline and Cold Creek depression are under the 200 West Area.

Geology of the 200 East Area. The general geology and geologic stratigraphy of the 200 East Area is depicted in Figures C1-35, C1-36, and C1-37. Suprabasalt sediments under this area consist of the Ringold Formation and Hanford formation. The Ringold Formation conforms to the basalt bedrock surface and tilts southeast toward the axis of the Cold Creek syncline. The Ringold Formation is dominated by gravel units E and A (i.e., the main unconfined aquifers) that are separated by the Lower Mud unit. The Ringold Formation thins from 50 m (164 ft) at the south end to nearly pinching out at the north end of the formation. The units have been truncated and are unconformably overlain by the Hanford formation. The Hanford formation is between 75- and 100-m (246- and 328-ft) thick at the 200 East Area.

Geology of the 200 West Area. The geology and geologic stratigraphy of the 200 West Area are depicted in Figures C1-35, C1-37, and C1-38. The Elephant Mountain Member of the CRBG forms the bedrock under the 200 West Area. 241-T, 241-TY, and 241-TX Tank Farms, located in the northern part of the 200 West Area, overlie sediments that rest on the CRBG.

The suprabasalt sediments at the 200 West Area consist of the Ringold Formation unit, Plio-Pleistocene/Early Palouse soils unit, and Hanford formation unit. The sediments conform to the basalt bedrock surface and tilt south toward the axis of the Cold Creek syncline. The Ringold Formation thins slightly from north to south and is dominated by gravel units E and A, which are separated by the Lower Mud unit. The Ringold Formation varies from 110- to 130-m (361- to 427-ft) thick, and gravel units A and E are the main unconfined aquifers. The upper Ringold unit is present only in the north part of the 200 West Area and consists mainly of sands. The Plio-Pleistocene/Early Palouse soils units overlie the Ringold Formation and are present throughout the 200 West Area. The Hanford formation overlies the Plio-Pleistocene and Early Palouse soils units and thickens from north to south. The Hanford formation varies from about 10 to 40 m (33 to 131 ft) in thickness.

C1.4.3.5 Tectonic Development of the Hanford Site. The geologic history of the Hanford Site from the Precambrian Period to the present significantly impacts hazards analyses (WHC-SD-W236A-TI-002, *Probabilistic Seismic Hazard Analysis, DOE Hanford Site, Washington*). This section summarizes the principal geologic events in the development of the Site geology.

The present structure of the Columbia Basin is the product of north-south compression that began in the early Tertiary Period before the eruption of the CRBG and continues today. The Columbia Basin is composed of two fundamental subprovinces, the Palouse Slope and the YFB.

The pattern of deformation in the Columbia Basin has been dominated by north-south compression and subsidence. The YFB is the principal product of the compression and subsidence. This deformation has controlled the location of the Columbia River system since the late Miocene Epoch and has also controlled the depositional pattern of the post-basalt sediments.

The rates of deformation, both regional subsidence and rate of local uplift, in the Columbia Basin have declined since the early Tertiary Period. The present rate of subsidence in the basin is estimated at 3.0×10^{-3} mm/yr (1.0×10^{-4} in./yr) and the rate of ridge growth is estimated at 0.05 mm/yr (0.002 in./yr).

Microseismicity (i.e., high in-situ stress conditions) and the geometry of Quaternary-Holocene Epoch faulting indicate that the Columbia Basin is still experiencing north-south compression. Although known late Cenozoic faults are found exclusively on the anticlinal ridges, earthquake focal mechanisms and strain measurements suggest that most stress release is occurring in the synclinal areas. The high in-situ stress in the Cold Creek syncline explains the microseismicity in the region but the absence of microseismicity associated with the anticlinal ridges may result from weakened fault zones, lubricated with groundwater, that have a component of a seismic or below-detection limit seismic slip, or the fault zones may be locked up.

C1.4.3.6 Contemporary Stress and Strain from Seismicity. Seismic monitoring at the Hanford Site began in the summer of 1969 when the U.S. Geological Survey installed a small array of seismograph stations around the Site. A closely spaced seismic network was installed at the Site in 1982 to characterize Site microseismicity for a possible high-level waste repository. The complete network operated until 1988 when the number of stations in the

network was reduced. Earthquakes of magnitude 2.5 and larger do occur throughout most of eastern Washington State, however, earthquakes of magnitudes 1.0 (coda amplitude magnitude) and larger have been recorded at the Hanford Site.

Earthquakes at the Hanford Site can be related to three crustal layers and five general sources (Tables C1-22 and C1-23). All layers and sources are monitored at the Hanford Site except the Cascadia Subduction Zone source, which is monitored at the University of Washington.

C1.4.3.6.1 Vertical Patterns. There are three horizontal layers of stratigraphy related to seismicity at the Hanford Site and vicinity: the CRBG, the prebasalt sediments, and the crystalline basement (Table C1-22). About 75% percent of Site earthquake events originate in the CRBG layer. The prebasalt sedimentary layer has been the origin of 8% of the events and the crystalline basement has been the origin of 17% of these events.

Shallow Earthquakes in the Basalt. The majority of the seismicity at the Hanford Site and the surrounding area originates from the basalt layer that extends from the surface to approximately 5 km (3 mi) belowground.

Earthquakes in Sedimentary Rock Below the Basalt. The seismicity in the pre-CRBG sedimentary rock under the Hanford Site appears to be confined to the top 3 km (2 mi). The seismicity of this sedimentary layer is relatively low when compared with the basalt layer but may be related to localized detachment zones that have resulted from the growth of anticlinal structures.

Earthquakes in the Crystalline Basement. Deep earthquakes below 10 km (6 mi) appear to be concentrated in the west and southwest portion of the Hanford Site. The deepest earthquakes located below the Site are shallower than 30 km (19 mi) (WHC-SD-W236A-TI-002).

C1.4.3.6.2 Spacial Patterns. There are five different tectonic environments (i.e., earthquake sources) where earthquakes can occur at the Hanford Site (Table C1-23). The five environments are as follows:

- Reverse and thrust faults in the CRBG associated with major anticlinal ridges (e.g., Rattlesnake Mountain, Yakima Ridge, and Umtanum Ridge)
- Secondary faults occurring on the major anticlinal ridges
- Small geographic areas of unknown geologic structure that produce clusters of events, called swarms, usually in the CRBG in synclinal valleys
- Basement source structures
- The Cascadia Subduction Zone.

Very little is known about geologic structures in the crystalline basement beneath the Hanford Site; therefore, earthquakes cannot be directly tied to a

mapped fault or other basement structure. The Cascadia Subduction Zone has recently been postulated to be capable of producing a Richter magnitude 5.6 earthquake (WHC-SD-W236A-TI-002).

Floating Earthquakes. Because of a special tectonic environment covering the entire Columbia Basin, the basin is considered a "floating" earthquake region. A floating earthquake is one that, for seismic design purposes, can occur anywhere in a tectonic province, is not associated with any known geologic structure, and can therefore "float" anywhere in the province.

Earthquake Swarm Areas. The major source of earthquakes at the Hanford Site is swarm activity. Swarm activity originates in synclinal areas in the YFB. Earthquake swarm events provide evidence for the stress regime in the Pasco Basin. Swarm events do not pose a significant hazard to the Site because these are of relatively small magnitude. There are four general areas of significant swarm activity that can impact the Hanford Site: the Wooded Island Swarm Area, Coyote Rapids Swarm Area, Cold Creek, and the West Saddle Mountains Swarm Area (Figure C1-39).

The Wooded Island Swarm Area, located near the 300 Area, occurs at the eastern edge of the YFB where it abuts against the Palouse Slope. This boundary marks the suture zone between the old accreted terranes to the west and the stable Precambrian-Paleozoic craton to the east (Reidel et al. 1994, "Late Cenozoic Structure and Stratigraphy of South-Central Washington"). This zone is also marked by an abrupt increase in thickness of basalt and sub-basalt sediment over the accreted terranes and abrupt thinning of basalt and sediment over the craton.

The Coyote Rapids swarm area is located at the horn of the Columbia River between the 100-K and 100-N Areas. The swarm area occurs over no known geologic structure, but does lie at the intersection of two paleoslopes that make a northeast-southwest trough extending from the City of Spokane, through the Hanford Site, to the Columbia River Gorge. This intersection zone may be a basement weakness zone but there is currently no known reason for swarms to occur in its present position.

The Saddle Mountains swarm area is located along the north side of the Saddle Mountains. The swarm area is located north of the Saddle Mountains fault zone in an area that has no mapped geologic structures. There is evidence of recent faulting (past 13,000 years) on the Saddle Mountains fault but there is no evidence of faults at the Saddle Mountains swarm area. The cause of the earthquake swarm is not known at this time.

Magnitude of Earthquakes. Since July 1982, approximately 650 earthquakes between magnitudes 0.0 and 3.8 have been recorded on and around the Hanford Site. The pattern of earthquake activity in the Hanford Site area between 1990 and 1995 is shown in Figure C1-40. The greatest seismic activity is in the low-Richter magnitude range, with only five events exceeding a magnitude of 3.0. The largest regional earthquake recorded was Richter magnitude 5.7 on July 16, 1936, 100 km (62 mi) southeast of the Hanford Site. The 1936 earthquake was estimated to have a peak acceleration of 0.03 *g*.

The largest earthquake recorded on the Hanford Site was magnitude 3.8 near the Coyote Rapids on the Columbia River, which are near the N Reactor and

15 km (9 mi) from the nearest TWRS facilities. The largest, recent, felt earthquake was Richter magnitude 3.3 on June 12, 1995, in the Wooded Island swarm area. Very shallow earthquakes of 3.8 Richter magnitude in soils similar to the Hanford Site would be expected to produce a ground motion of 0.01 to 0.05 *g* at a distance of 5 km (3 mi). There is very high uncertainty with ground motions of small earthquakes because of the limited data. Instruments that record ground motion are set to activate recording at higher ground motions than are produced by this event.

Contemporary Stress in the Cold Creek Syncline. Contemporary stress in the Cold Creek syncline is expressed principally as horizontal shortening and subsidence. Geodetic surveys were performed across the Pasco Basin to determine rates of shortening (Prescott and Savage 1984, *Crustal Deformation Near Hanford, Washington*). The data suggests north-south shortening but the rate of shortening is not statistically significant at the 95% confidence level.

Contemporary stress measurements were performed at the Hanford Site as part of the Basalt Waste Isolation Project. Hydraulic fracturing tests were conducted in boreholes drilled in the Cold Creek syncline at about 1 km (0.6 mi) depth (DOE-RW-0164). The results also indicated high in situ stress. The maximum horizontal stress was shown to range from 52.6 to 67.4 Mpa (7,630 to 9,780 lbf/in.^{2}) and the minimum horizontal stress ranges from 30.3 to 35.7 Mpa (4,400 to 5,180 lbf/in.^{2}) with a mean horizontal-to-vertical ratio of 1.77 $\pm$0.20. The mean orientation of induced fractures, and the direction of the maximum horizontal stress, are consistent with north-south compression.

Subsidence has been occurring in the Pasco Basin since at least the Eocene Epoch. Estimates of subsidence since the middle Miocene Epoch (17 million years ago) indicate the rates of subsidence have declined to the present. From 17 to about 15.6 million years ago, the rate of subsidence was about 7.6 to 10 mm/yr (0.3 to 0.4 in./yr). This subsidence rate decreased to about 0.3 mm/yr (0.01 in./yr) 15.6 to 14.5 million years ago. The present rate of ridge growth is estimated at 0.51 mm/yr (0.02 in./yr) and the rate of subsidence in the basin is estimated at 0.003 mm/yr (0.0001 in./yr).

The patterns of subsidence in the Cold Creek syncline are shown in Figure C1-41. There are two broad areas of subsidence in the Cold Creek syncline: the Wye Barricade depression and the Cold Creek depression. Both areas have had a long, slow history of subsidence (RHO-BWI-ST-19, *Preliminary Interpretation of Tectonic Stability of the Reference Repository Location - Cold Creek Syncline, Hanford Site*), but neither is located near the 200 East or 200 West Areas.

C1.4.3.7 Geologic Hazards. The geologic hazards that affect the performance of TWRS facility activities have been assessed on the basis of the geologic data addressed in previous sections. These hazards are discussed below and, where appropriate, are quantified for use in the structural evaluations and safety analyses for the TWRS facilities addressed in this report.

C1.4.3.7.1 Seismic Hazard Assessment. A seismic hazard analysis was recently completed for the DOE-controlled areas on the Hanford Site (WHC-SD-W236A-TI-002). Power et al. 1981, "Seismic Exposure for the WNP-2 and WNP-1/4 Site," documents a previous Site seismic hazard analysis performed for

the Supply System. Application of the analysis findings to the DOE-controlled areas on the Hanford Site is documented in WHC-MR-0023, *Evaluation of Seismic Hazard for Nonreactor Facilities, Hanford Reservation, Hanford, Washington.*

WHC-SD-W236A-TI-002 incorporates seismo-tectonic data and interpretations that postdate the Power et al. (1981) assessment. Potential seismic crustal sources determined to be major contributors to the seismic hazard in and around the Hanford Site are as follows:

- Fault sources related to the YFB
- Shallow basalt sources that account for the observed seismicity in the CRBG and not associated with the anticlines
- Crystalline basement source region.

The mean seismic hazard curves for the 200 East and 200 West Areas are shown in Figure C1-42. Proximity to the YFB fault sources is the chief reason for seismic hazard differences across the Hanford Site. The difference between 200 East and 200 West Area hazard curves is chiefly related to the distance from the Yakima Ridge buried extension. Figure C1-43 illustrates contributions of individual YFB folds to the mean seismic hazard at the 200 East and 200 West Areas.

The seismic hazard exceedance probabilities for each Performance Category are derived in DOE-STD-1020-94 and presented in Table C1-24. The peak horizontal surface ground accelerations for the 200 East and 200 West Areas are also shown in Table C1-24.

Horizontal equal-hazard response spectra were developed for the 200 East and 200 West Areas. The 200 West Area Performance Category 3 response spectra at 5% damping are shown in Figure C1-44. The response spectra are anchored to the peak surface ground acceleration. Additional response spectra damping values are presented in WHC-SD-W236A-TI-002 and Tables C1-25, C1-26, and C1-27.

The Site response characteristics of the soils underlying the 200 East and 200 West Areas are similar to those represented in the California empirical strong motion database (WHC-SD-W236A-TI-002). This similarity was determined by comparing the relative response of characteristic Hanford Site soil profiles and dynamic soil properties with those of California deep soil strong-motion recording stations. Time histories representative of the events contributing to the Hanford Site hazard were used for ground motion input (WHC-SD-W236A-TI-002).

The TWRS waste tanks were analyzed and designed to the seismic response spectra criteria in place at the time of their analysis or design. Figure C1-44 also illustrates two previously used response spectra for comparative purposes. The horizontal design response spectrum used from October 1, 1973, to September 5, 1989, was developed for the Fast Flux Test Facility reactor. The response spectrum criterion from September 6, 1989, to present was developed in compliance with UCRL-15910. DOE-STD-1020-94 provides

guidance for evaluating existing facilities from which the response spectrum for existing 200 East and 200 West Area facilities was developed (Figure C1-44).

C1.4.3.7.2 Volcanic Hazard Assessment. Two types of volcanic hazards have affected the Hanford Site in the past 20 million years. The hazards were (1) continental flood basalt volcanism that produced the CRBG, and (2) volcanism associated with the Cascade Range. Several volcanoes in the Cascade Range are currently considered to be active, but activity associated with flood basalt volcanism has ceased.

The flood basalt volcanism that produced the CRBG occurred between 17 and 6 million years ago. Most of the lava was extruded during the first 2 to 2.5 million years of the 11-million-year volcanic episode. Volcanic activity has not recurred during the last six million years, suggesting that the tectonic processes that created the episode have ceased. The recurrence of CRBG volcanism is not considered to be a credible volcanic hazard (DOE-RW-0164).

Volcanism in the Cascade Range was active throughout the Pleistocene Epoch and has remained active through the Holocene Epoch. The eruption history of the current Holocene Epoch best characterizes the most likely types of activity in the next 100 years. Many of the volcanoes have been active in the last 10,000 years, including Mount Mazama (Crater Lake) and Mount Hood in Oregon and Mount Saint Helens, Mount Adams, and Mount Rainier in Washington (Figures C1-31 and C1-32). The Hanford Site is approximately 150 km (93 mi) from Mount Adams, 175 km (109 mi) from Mount Rainier, and 200 km (124 mi) from Mount Saint Helens, the three closest active volcanoes. At these distances, the tephra (ash) is the only hazard. Mount Saint Helens has been considerably more active throughout the Holocene Epoch than Mount Rainier or Mount Adams, which is the least active of the three.

Probabilistic volcanic hazard studies of the Cascade Range have been completed by the U.S. Geological Survey (USGS 1987b, *Volcanic Hazards with Regards to Siting Nuclear-Power Plants in the Pacific Northwest*; USGS 1995b, *Volcanic Hazards in the Mount Adams Region, Washington*). Figure C1-31 illustrates the annual probability of exceeding 10 mm (0.4 in.) of volcanic ash accumulation in Washington and Oregon following the eruption of a major Cascade Range volcano and Figure C1-32 illustrates the annual probability of exceeding 100 mm (4 in.) of volcanic ash accumulation. Figure C1-45 presents this information as a volcanic ash hazard curve for the Hanford Site.

C1.4.3.7.3 Subsurface Stability. The tank farms and associated facilities are all on the 200 Areas Plateau, a large flood bar formed by cataclysmic flooding during the Pleistocene Epoch. The foundation material is predominantly the sand-dominated facies of the Hanford formation with varying amounts of gravel. The backfill used at the tank farm sites consists of native soil that has been compacted. Though the 200 Areas Plateau soils have the same genesis, variations in the depositional energy results in textural variation across the plateau. The static and dynamic properties of the plateau soils are quite similar, but the specific characteristics at each tank farm must be evaluated for certain analyses.

Soils investigations completed at a site near the west boundary of the 200 East Area and at a site in the 200 West Area for proposed new tanks provided information on static, dynamic, and general soil characteristics (ICF KH 1995a, *Geotechnical Investigation KEH W-236A, Multi-Function Waste Tank Facility, 200 East Area, Hanford Site, Richland, Washington*; ICF KH 1995b, *Geotechnical Investigation KEH W-236A, Multi-Function Waste Tank Facility, 200 West Area, Hanford Site, Richland, Washington*). Tables C1-28 and C1-29 summarize the static soil properties near the 200 East and 200 West Areas. The dynamic soil properties for the two areas are shown in Tables C1-30 and C1-31. These property lists illustrate the general characteristics of the 200 Areas Plateau soils.

Soil properties are presented in these tables for several strata. Stratum 1 is the loose wind-blown surface material that is characterized as loose to dense silt with sand and is not considered a structural foundation material. Stratum 2, the next underlying layer, is medium dense to very dense, fine to coarse gravel. The next lower layer is Stratum 3, a dense to very dense, fine to medium sand. Materials lying below the Hanford formation sands and gravels have been previously discussed in Section C1.4.3 and shown in Figure C1-37. Tables C1-28, C1-29, C1-30, and C1-31 refer to materials below elevation 42.7 m (140 ft) as bedrock. Backfill is excavated material from Strata 2 and 3, which has been mixed-conditioned, and then placed as engineered fill.

Field and laboratory studies that have been completed at many of the tank farm sites are summarized in WHC-SD-GN-ER-30009, *Bibliography and Summary of Geotechnical Studies at the Hanford Site*. These studies reveal that there are no areas of potential surface or subsurface subsidence, uplift, or collapse at the Site, with the minor exceptions of the Cold Creek and Wye Barricade depressions discussed previously. With the exception of the loose superficial wind-deposited silt and sand in some locations, the in-place soils are competent and form good foundations.

Liquefaction is the sudden decrease of shearing resistance of a cohesionless soil, caused by the collapse of the structure by shock or strain, and is associated with a sudden but temporary increase of the pore fluid pressure. Saturated or near-saturated soil (sediments) are required for liquefaction to occur. Therefore, liquefaction of soils beneath the tank farms is not a credible hazard because the water table is greater than 65 m (213 ft) below ground surface.

C1.5 NATURAL PHENOMENA THREATS

The meteorology, hydrology, geology, seismology, and geotechnical site information presented in previous sections of this chapter are summaries of the data required by DOE-STD-1022-94. This data provides the fundamental input for development of the natural phenomena hazard following guidance in DOE-STD-1023-95. Hazard curves were developed and are presented for straight wind and tornado, local precipitation, seismic ground motion, and volcanic ash.

DOE-STD-1020-94 presents a graded approach to hazard mitigation, including graded performance goals based on the Safety-Class designation and

hazard of the facility, design guidance for the natural phenomena hazard, and a probability of exceedance for each hazard.

The following natural phenomena have been addressed in the preceding sections. These phenomena represent initiating events that should be addressed in Chapter 5.0. Design or evaluation criteria are provided in Table C1-32 for each of the natural phenomena threats that have been identified as requiring evaluation in the hazards and accident analysis.

- **Temperature**—No design or evaluation guidance is provided for evaluation of extreme temperatures. Although extreme temperatures are not considered initiating events, extreme temperature must be considered during the evaluation of systems important to safety.

- **Precipitation**—No design or evaluation guidance, with the exception of that for snowfall, is provided for the evaluation of maximum precipitation. However, in addition to snow loading, as a potential initiator, the impacts associated with flash flooding of the Cold Creek should be evaluated.

- **Thunderstorms**—No design or evaluation guidance is provided for the evaluation of thunderstorms; however, the phenomena associated with thunderstorms (i.e., hail and lightning) are appropriate for consideration. There has been limited observances of hail on the Hanford Site (maximum observance is two days in one year); however, because of the potential for lightning strikes and the potential for lightning to be an initiating event, this should be evaluated.

- **Extreme Winds and Tornadoes**—Design or evaluation guidance is provided for the evaluation of extreme winds and tornadoes. High winds are considered an initiating event and dispersion mechanism. Tornadoes are not considered credible following the methodology prescribed in UCRL-53526.

- **Dust and Blowing Dust**—No design or evaluation guidance is provided for the evaluation of dust or blowing dust. These phenomena will have similar impacts associated with blowing or falling volcanic ash and should be addressed similarly.

- **Fog and Cloud Cover**—No design or evaluation guidance is provided for the evaluation of fog and cloud cover. This is not considered an initiating event; however, fog and cloud cover may impact dose consequence evaluations.

- **Relative Humidity**—No design or evaluation guidance is provided for the evaluation of relative humidity. Although these are not considered initiating events, humidity must be considered during evaluation of systems important to safety.

- **Dispersion Climatology**—This data is used to determine consequences to receptors. The data is used to determine plume travel times and distances, and contaminant concentration levels. This data is provided as joint frequency data, which is input into dose consequence models used in Chapter 5.0.

- **Hydrology**—No design or evaluation guidance is provided for the evaluation of hydrogeolgic properties, including infiltration rates, liquid travel times through the vadose zone and the groundwater, and flooding. The discussion associated with liquid travel times is presented to provide an understanding of the potential impacts of releases to the soil column for consideration in the hazards and accident analysis. Dam flooding is not considered credible because of the elevation of the 200 East, 200 West, and 600 Areas with respect to the Columbia River. As identified in the maximum precipitation discussion, the impacts associated with flash flooding of the Cold Creek should be evaluated.

- **Seismic Hazards**—Seismic events are considered credible accident initiators at the Hanford Site and should be evaluated. Design or evaluation guidance, specific to the Hanford Site, are provided for the evaluation of seismic events. All events (i.e., low- and high-magnitude earthquakes) should be considered in the hazards and accident analyses.

- **Volcanic Hazards**—Design or evaluation guidance is provided for the evaluation of ashfall loading as a potential initiating event. Although no criteria are provided for blowing or falling ash, ash should be evaluated as an initiating event (e.g., loss of ventilation systems).

- **Subsurface Stability**—No design or evaluation guidance is provided for the subsurface stability. The discussion associated with subsurface stability is presented to provide an understanding of the potential for impacts to facilities or structures from long-term (40+ years) settling of compacted soils.

C1.6 EXTERNAL MAN-MADE THREATS

This section identifies and investigates specific man-made threats associated with the TWRS facilities and considered to be potential accident initiators, exclusive of sabotage and terrorism. Transportation activities discussed separately include potential accidents from roadway vehicles, railcars, and aircraft.

The highways traversing the Hanford Site and the restricted-access Site roadways are transportation routes for trucks delivering gas, diesel fuel, and chemicals. Because of the distance from these highways to the TWRS facilities, the impact of a highway accident involving toxic and hazardous chemicals will be less severe than a worst-case chemical or toxic material accident occurring in the 200 East and 200 West Areas. The restricted access onsite roadways are routinely used for transporting personnel to and from TWRS facilities and for delivery and removal of parts, process chemicals, and solid or liquid waste. Many of these roadways are adjacent to (i.e., within 15 m [50 ft] of a facility or tank farm gate) and provide access to the facilities. Therefore, vehicular impacts on the onsite roadways should be evaluated.

The main line of the Hanford Site railroad passes within about 250 m (820 ft) of the 241-T, 241-TX, and 241-TY Tank Farms (Figure C1-8). A toxic

or hazardous chemical spill from a nearby railcar could impact the facilities; however, the potential for a railcar physically impacting a TWRS facility is credible only at the 204-AR Waste Unloading Facility (Chapter 5.0).

No commercial refineries or major oil, ammunition, or explosive storage facilities are located within 32 km (20 mi) of the TWRS facilities. The nearest natural gas transmission pipeline is approximately 48 km (30 mi) from the facilities. The distance of the refineries, storage facilities, and the pipeline from the 200 East and 200 West Areas makes the hazard from explosions or fires at the commercial refineries and storage facilities almost nonexistent.

There are no private, commercial, or DOE-owned airports within 32 km (20 mi) of the 200 East and 200 West Areas. The three nearest airports are the Richland Airport, the Tri-Cities Airport in Pasco, and Vista Field in Kennewick. The small, general-utility Richland Airport is the nearest. Commercial air carriers use the Tri-Cities Airport, located approximately 48 km (30 mi) southeast of the 200 East and 200 West Areas. The probability of commercial aircraft at the Tri-Cities Airport or of small private and commercial aircraft at Richland Airport and Vista Field adversely impacting the TWRS facilities is remote given the low air traffic volume and the airport distance from the 200 East and 200 West Areas.

C1.7 NEARBY FACILITIES

Accidents in certain nearby facilities have the potential to impact TWRS facilities and operations. Conversely, certain nearby facilities can be affected by accidents in the TWRS facilities.

C1.7.1 Potential Effects from Nearby Facilities

Potential hazards to TWRS facilities from onsite or offsite hazardous operations or facilities are examined under three general classifications:

1. Nonreactor nuclear and nonnuclear industrial facilities within 8 km (5 mi) of the TWRS facility sites, including all activities conducted in and near the 200 East and 200 West Areas
2. Nuclear reactors within an 8-km (5-mi) radius of the tank farms
3. Military activities.

C1.7.1.1 Hazards to TWRS Facilities from Nonreactor Nuclear Facilities. Safety documentation for facilities not part of this Basis for Interim Operation were reviewed for hazard potential. The facilities selected for identification are those believed to pose the most risk to safe operations of TWRS facilities. The facilities were those (1) currently operating, (2) recently operating, or (3) with potential to impact TWRS facilities in the 200 East and 200 West Areas. Safety analysis reports and accident analyses prepared for the nonreactor nuclear facilities were reviewed to determine possible hazards (e.g., radiological doses to personnel resulting from direct radiation, release of airborne radioactivity, exposure to toxic chemicals).

Hazard potential from the burial grounds, Liquid Effluent Retention Facility, Effluent Treatment Facility in the 200 East Area, T Plant, U Plant, Reduction Oxidation Plant, and 222-S Laboratory was considered. These facilities have radiological or toxicological inventories that are insufficient to support an accident. Facilities specifically discussed include the following:

- PUREX Facility (200 East)
- Grout Treatment Facility (200 East)
- B Plant (200 East)
- Waste Encapsulation and Storage Facility (200 East)
- 242-A Evaporator (200 East)
- Plutonium Finishing Plant (200 West)
- Low-Level Waste Disposal Site (200 West)
- K Basins (100 KE and 100 KW Areas).

Each of the postulated facility accidents has the potential to impact TWRS operations; however, should a release occur, the impacts and response actions (facility or Hanford Site) are identified in the facility (where the release originated), TWRS, and Hanford Site emergency response plans (DOE/RL-94-02).

Plutonium Uranium Extraction Facility. The PUREX Facility is located in the 200 East Area, southwest of the 241-AW Tank Farm. This facility is the most recently constructed of the irradiated fuel separation facilities and was used for processing N Reactor fuel. The principal product was a solution of plutonium nitrate that was transferred to the Plutonium Finishing Plant for further processing. Another product was uranyl nitrate solution, which was processed at the Uranium Oxide Plant. The PUREX Facility is shutdown and undergoing preparations for eventual decontamination and decommissioning. The postulated PUREX Facility accidents having the most severe radiological consequences to a maximally exposed individual are associated with a cooling coil leaking into the 216-A-25 pond and a fission product release from the PUREX Facility pipe and operating gallery.

Grout Treatment Facility. The Grout Treatment Facility is located approximately 400 m (1,312 ft) due east of the 241-AP Tank Farm (Figure C1-7). At this facility tank wastes are combined with grout-forming solids to create a grout slurry. The waste feed stream constituent of this slurry consists of low-level fractions of radioactive wastes. The slurry is ultimately pumped into near-surface concrete-lined vaults for permanent disposal. Only one vault has been filled with grout (completed in 1987), even though additional vaults have been designed and constructed. The Grout Treatment Facility is currently not operational, but there is a possibility that the facility will operate again in the future.

B Plant Facility. The B Plant is located in the 200 East Area southwest of the 241-BX Tank Farm in the 200 East Area. B Plant was operated as a fuel separation facility until 1952. In 1968, the plant was converted to a waste fractionation plant to remove cesium-137 and strontium-90 from radioactive waste streams to reduce the heat load in the double-shell tanks. The B Plant now provides essential support to the Waste Encapsulation and Storage Facility and is undergoing preparations for a transition to shutdown status. The most credible accident at B Plant results from the simultaneous occurrence of (1) a solvent fire in which hot gases from the fire heat filters drive off material on the filters, and (2) a blowback of process solution into the pipe gallery caused by tank pressurization (WHC-SD-WM-TI-385, *B Plant Preliminary Accident Analysis*).

Waste Encapsulation and Storage Facility. The Waste Encapsulation and Storage Facility is distinct from B Plant even though it shares a common wall at the west end of B Plant. Historically, activities at the Waste Encapsulation and Storage Facility involved converting cesium and strontium into cesium chloride and strontium fluoride salts. These materials were then encapsulated in double-walled metal containers and stored in a water-filled cooling basin. Strontium fluoride and cesium chloride capsules are still being stored at the facility in the cooling basin, but no new capsules are being produced. The worst-case credible accidents postulated for B Plant involve a truck fire with a leaking gas tank that catches fire in the plant truck port and causes an extended loss of water in the pool cells.

242-A Evaporator. The 242-A Evaporator is located directly south of the 241-A Tank Farm and directly north of the 241-AW Tank Farm. At the 242-A Evaporator, evaporative concentration is used to reduce the volume of liquid wastes (low-heat-generating tank wastes). Once reduced, the concentrated slurry is transferred and stored in an underground waste storage tank. The process condensate is routed to the Liquid Effluent Retention Facility for storage and eventual treatment at the Effluent Treatment Facility. Following startup of the Effluent Treatment Facility, the process condensate will be routed directly to that facility.

There were five 242-A Evaporator design basis accidents analyzed that involved radiological releases (WHC-SD-WM-SAR-023, *242-A Evaporator/ Crystallizer Safety Analysis Report*). The worst-case scenario involved a release from a spray leak in the pump room and a failure of the exhaust system high-efficiency particulate air filters.

Plutonium Finishing Plant. The Plutonium Finishing Plant is located near the western boundary of the Hanford Site in the 200 West Area, southwest of the 241-TX Tank Farm. At this plant, plutonium nitrate solution is converted to plutonium metal, and plutonium handling and storage operations are performed. Contaminated liquid waste streams from the Plutonium Finishing Plant are routed to the tank farms. The plant is currently in a standby mode and is not anticipated to operate again in the future. The worst-case accident scenario at this point is associated with a postulated fire having an airborne release of plutonium-239 (WHC-SD-SQA-TI-013, *Safety and Risk Assessment Technical Information to Support Plutonium Finishing Plant Restart*).

Low-Level Waste Disposal Site. The commercial low-level waste disposal site, operated by U.S. Ecology, Incorporated, is the only non-DOE industrial facility within 8 km (5 mi) of the nearest TWRS facilities. The disposal site is on land leased from Washington State (Section C1.3.1). The low-level waste is buried in lined containers. Monitoring of groundwater, vegetation, and other activities is performed as required by the facility U.S. Nuclear Regulatory Commission operating license and environmental impact statement.

K Basins. The K Basins include the fuel storage pools located in the 100 K East and 100 K West Area fuel storage facilities. The facilities were constructed as storage for spent nuclear fuel following irradiation in 100 K East and 100 K West reactors prior to processing. A review of WHC-SD-SNF-TI-013, *K Basin Environmental Impact Statement Technical Input*, indicates that the worst-case event at either basin is a cask dropped into a spent fuel pool. This event would result in a release of spent fuel and canister sludge.

C1.7.1.2 Hazards to the Tank Farms from Nonnuclear Industrial Facilities. A number of nonnuclear industrial facilities operating in the 200 East and 200 West Areas pose the potential for accidental fires, explosions, or releases of toxic fumes. These facilities include the Essential Materials Warehouse (Building 275-EA), oil and paint storage buildings, fabrication shops, gas cylinder storage buildings, the spare parts and electrical warehouse, B Plant storage buildings, maintenance facilities, gasoline service stations, and the powerhouse complexes (284-E and 284-W).

Building 275-EA is an essential materials warehouse that is considered representative of most warehouses and fabrication shops on Site. The building is located approximately 150 m (500 ft) north of the PUREX Facility and approximately 100 km (328 ft) southwest of the 204-AR Waste Unloading Facility. Building 275-EA is classified as an unprotected wood frame structure and is susceptible to collapse as a result of an external event (e.g., earthquake, wind, snow, or ash loading) or an internal event (e.g., forklift collision with a bearing wall, or fire). More than 100 different types of potentially hazardous solids and liquids are currently stored in Building 275-EA. The solids and liquids include acids, bases, solvents, fluorides, pesticides, and herbicides. Radioactive materials are not stored in this building. The worst-case chemical release postulated in the safety analysis occurs following a building collapse whereupon 2,450 kg (5,445 lb) of 1,1,1-trichloromethane evaporates under adverse atmospheric conditions.

The three boilers in the 242-A Package Boiler System provide steam for evaporator operation and building heat loads. The system description and potential hazardous conditions to TWRS was discussed and evaluated in HNF-1727, *Hazard Evaluation of the 242-A Package Boiler System Impact on Tank Farms*. Based on the evaluation, the 242-A Package Boiler System does not increase the frequencies or consequences or present any new or modified accidents not already addressed by the BIO.

Other nonnuclear industrial facilities with the potential to impact TWRS operations are those facilities that provide raw water and electricity. Raw water is supplied to the 200 East Area from the 282-E Building and in the 200 West Area from the 282-W Building. Electricity is supplied to the

200 East and 200 West Areas from the 284-E and 284-W powerhouses. Only programmatic impacts (i.e., loss of facility capability) have been identified. No other nonnuclear industrial facilities or operations have been identified that may impact TWRS operations.

C1.7.1.3 Hazards to TWRS Facilities from Nuclear Reactors. The N Reactor, Fast Flux Test Facility, and Critical Mass Laboratories facility are three reactors that have recently been in operation but no longer pose threats to TWRS facilities. The N Reactor and Fast Flux Test Facility are undergoing decontamination and decommissioning, and the Critical Mass Laboratories facility (in 209-E Building, north of the PUREX Facility) is presently being used as TWRS office facility.

The N Reactor was a 4,000 MW, dual-purpose, pressure tube, light-water cooled, graphite-moderated reactor. The reactor, which is located in the 100-N Area, began operating in 1964 and was used to produce plutonium for the defense program and steam for electrical power generation. The reactor was shut down in 1987 for safety improvements and then subsequently defueled and placed in cold standby in 1988. N Reactor is currently undergoing decontamination and decommissioning.

The Fast Flux Test Facility is a 400 MW, sodium-cooled, mixed-oxide fueled, breeder reactor that is currently in "hot shutdown" and has been defueled. The reactor is located in the 400 Area and is approximately 7.2 km (4.5 mi) west of the nearest Hanford Site boundary.

The only nuclear reactor on the Hanford Site that may be operating during the lifetime of the TWRS facilities is WNP-2 (Figure C1-4). WNP-2 is an operational commercial nuclear power plant using a boiling-water reactor steam supply system. Worst-case accidents at the WNP-2 reactor do not carry any potential for adversely impacting TWRS operations or personnel.

C1.7.1.4 Hazards to TWRS Facilities from Military Facilities. The Yakima Firing Center, a subinstallation under the command of Fort Lewis (Tacoma, Washington), is the site of the only significant military activity in the vicinity of the Hanford Site (DOA 1979, *Final Environmental Impact Statement - Ft. Lewis Military Installation*). The multiple launch rocket system is the only weapon currently in use at the center that is known to present a hazard to Hanford Site facilities. With a range of approximately 26 km (16 mi), a rocket launched from the system has the potential to impact the 200 West Area (Figure C1-46); however, the rocket system is only fired with dummy warheads from the perimeter of the Yakima Firing Center, away from the Hanford Site, and into a centrally located impact zone. The approximate range of the multiple launch rocket system is shown in Figure C1-46.

A more probable hazard from the Yakima Firing Center to Hanford Site facilities is a scenario in which a fire starts in the Yakima Firing Center boundary and spreads to the Hanford Site. Exploding artillery shells, sparks from tracked vehicles or other machines, and careless smoking by troops may start brush fires that, under adverse meteorological conditions, could spread rapidly beyond the firing center boundaries. Hazards associated with range fires are discussed in Chapter 5.0.

C1.7.2 Potential Effects to Nearby Facilities

TWRS facility accidents with the potential to affect the maximum onsite individual (which may include persons at some of the facilities cited in Section C1.7.1) are specifically limited to those accidents discussed in Chapter 5.0.

C1.8 VALIDITY OF EXISTING ENVIRONMENTAL ANALYSES

No significant discrepancies have been identified between the Site characteristic assumptions herein and those existing in DOE/EIS-0113 or DOE/EIS-0189.

C1.9 REFERENCES

ARH-ST-149, 1977, *Hanford Pathline Calculational Program - Theory, Error Analysis and Applications*, Atlantic Richfield Company, Richland, Washington.

ASCE-7, 1988, *Minimum Design Loads for Buildings and Other Structures*, American Society of Civil Engineers, New York, New York.

Baker, V. R., B. N. Bjornstad, A. J. Busacca, K. R. Fecht, U. L. Moody, J. G. Rigby, D. F. Stradling, and A. M. Tallman, 1991, "Quaternary Geology of the Columbia Plateau," *Quaternary Nonglacial Geology; Conterminous U.S.*, Vol. K-2, Geological Society of America, Boulder, Colorado.

BNWL-1605, 1972, *Climatography of the Hanford Area*, Battelle Pacific Northwest Laboratory, Richland, Washington.

BNWL-2000, 1976, "An Investigation of Regional Flow Patterns over an Area of Complex Terrain," *Annual Report for 1975 to the US ERDA Division of Bio-Medical and Environmental Research*, Part 3, pp. 246-252, Battelle Pacific Northwest Laboratory, Richland, Washington.

Campbell, N. P., 1989, *Structural and Stratigraphic Interpretation of Rocks Under the Yakima Fold Belt, Columbia Basin, Based on Recent Surface Mapping and Well Detail*, Special Paper 239, Geological Society of America, Boulder, Colorado.

Critchfield, H. J., 1974, *General Climatology*, third ed., Prentice-Hall, Inc., Englewood Cliffs, New Jersey.

Delorme, 1988, *Washington Atlas and Gazetteer*, Delorme Mapping Company, Freeport, Maine.

DOA, 1979, *Final Environmental Impact Statement - Ft. Lewis Military Installation*, U.S. Department of Army, Headquarters, 9th Infantry Division and Ft. Lewis, Seattle, Washington.

DOE 5480.28, 1993, *Natural Phenomena Hazards Mitigation*, Change 0, U.S. Department of Energy, Washington, D.C.

DOE 6430.1A, 1989, *General Design Criteria*, Change 0, U.S. Department of Energy, Washington, D.C.

DOE/EIS-0113, 1987, *Final Environmental Impact Statement: Disposal of Hanford Defense High-Level, Transuranic, and Tank Wastes, Hanford Site, Richland, Washington*, 5 vols., U.S. Department of Energy, Washington, D.C.

DOE/EIS-0189, 1996, *Final Environmental Impact Statement for the Tank Waste Remediation System*, Vol. 1, U.S. Department of Energy, Washington, D.C.

DOE/RL-92-16, 1993, *200 West Groundwater Aggregate Area Management Study Report*, Rev. 0, U.S. Department of Energy, Richland Operations Office, Richland, Washington.

DOE/RL-92-19, 1993, *200 East Groundwater Aggregate Area Management Study Report*, Rev. 0, U.S. Department of Energy, Richland Operations Office, Richland, Washington.

DOE/RL-94-02, 1995, *Hanford Emergency Response Plan*, Rev. 1, U.S. Department of Energy, Richland Operations Office, Richland, Washington.

DOE/RL-93-88, 1994, "Hydrogeologic Setting of the 200 Areas," *Annual Report for RCRA Groundwater Monitoring Projects at Hanford Site Facilities for 1993*, Rev. 0, U.S. Department of Energy, Richland Operations Office, Richland, Washington.

DOE-RLID 1210.1, 1993, *Hanford Visitor Policies and Procedures*, U.S. Department of Energy, Richland Operations Office, Richland, Washington.

DOE/RW-0070, 1986, *Environmental Assessment, Reference Repository Location, Richland, Washington*, U.S. Department of Energy, Washington, D.C.

DOE/RW-0164, 1988, *Site Characterization Plan Reference Repository Location, Hanford Site, Washington*, Vol. 2, U.S. Department of Energy, Washington, D.C.

DOE-STD-1020-94, 1994, *Natural Phenomena Hazards Design and Evaluation Criteria for Department of Energy Facilities*, Change 1, U.S. Department of Energy, Washington, D.C.

DOE-STD-1021-93, 1993, *Natural Phenomena Hazards Performance Categorization Guidelines for Structures, Systems, and Components*, Change 1, U.S. Department of Energy, Washington, D.C.

DOE-STD-1022-94, 1994, *Natural Phenomena Hazards Characterization Criteria*, Change 1, U.S. Department of Energy, Washington, D.C.

DOE-STD-1023-95, 1995, *Natural Phenomena Hazards Assessment Criteria*, Change 1, U.S. Department of Energy, Washington, D.C.

DOE-STD-1024-92, 1992, *Guidelines for Use of Probabilistic Seismic Hazard Curves at Department of Energy Sites*, Change 1, U.S. Department of Energy, Washington, D.C.

Fecht, K. R., S. P. Reidel, and A. M. Tallman, 1987, "Paleodrainage of the Columbia River System on the Columbia Plateau of Washington State — A Summary," *Selected Papers on the Geology of Washington*, Bulletin 77, Division of Geology and Earth Resources, Washington State Department of Natural Resources, Olympia, Washington.

Hansen, E. M., D. D. Fenn, P. Corrigan, J. L. Vogel, L. C. Schreiner, and R. W. Stoch, 1994, *Probable Maximum Precipitation — Pacific Northwest States*, Hydrometeorological Report No. 57, National Weather Service, Silver Spring, Maryland.

HNF-1727, 1997, *Hazard Evaluation of the 242-A Package Boiler System Impact on Tank Farms*, Rev. 0, Duke Engineering and Services, Hanford, Richland, Washington.

HNF-PRO-097, 1997, *Engineering Design and Evaluation*, Rev. 0, Fluor Daniel Hanford, Inc., Richland, Washington.

ICF KH, 1995a, *Geotechnical Investigation KEH W-236A, Multi-Function Waste Tank Facility, 200 East Area, Hanford Site, Richland, Washington*, drawing H-1053-05, ICF Kaiser Hanford Company, Richland, Washington.

ICF KH, 1995b, *Geotechnical Investigation KEH W-236A, Multi-Function Waste Tank Facility, 200 West Area, Hanford Site, Richland, Washington*, drawing H-1070-50, ICF Kaiser Hanford Company, Richland, Washington.

Jarchow, C. M., 1991, *Investigations of Magmatic Underplating Beneath the Northwestern Basin and Range Province, Nevada, Seismic Data Acquisition and Tectonic Problems of the Columbia Plateau, Washington and the Nature of the Mohorovicic Discontinuity Worldwide*, Department of Geophysics, Stanford University, Stanford, California.

Keinle, C. F., R. D. Bentley, and J. L. Anderson, 1978, "Geologic Reconnaissance in the Cle Elum-Wallula Lineament and Related Structures," *Washington Public Power Supply System Nuclear Project Number 2, Preliminary Safety Analysis Report*, Vol. 2A, Amendment 23, Subappendix 2R D, pp. 1-33, Washington Public Power Supply System, Richland, Washington.

Law, A. G., 1993, *Infiltration Rates at the Preferred Soil Column Disposal Site* (internal letter 81233-93-002 to K. J. Koegler, February 24), Westinghouse Hanford Company, Richland, Washington.

Mogle, R. D., 1987, *WNP-1, 2 Ten Mile EPZ Evacuation Time Assessment Study*, Rev. 2, Washington Public Power Supply System, Richland, Washington.

Murphy, E. M., M. L. Rockhold, and M. J. Fayer, 1994, "Evaluation of Net Residual Fluxes Determined by Chloride Mass Balance in the Pasco Basin, Southeastern Washington," *Geological Society of America: 1994 Annual Meeting*, Seattle, Washington.

NUREG 1.23, 1974, *Onsite Meteorological Programs*, U.S. Nuclear Regulatory Commission, Washington, D.C.

NUREG/CR-4492, 1986, *Methodology for Estimating Extreme Winds for Probabilistic Risk Assessments*, U.S. Nuclear Regulatory Commission, Washington, D.C.

Pasquill, F., 1961, "The Estimation of the Dispersion of Windborne Material," *Meteorology Magazine*, Vol. 90, pp. 33-49.

PNL-3509, 1982, *Standardized Input for Hanford Environmental Impact Statements, Part II: Site Description*, Pacific Northwest Laboratory, Richland, Washington.

PNL-4622, 1983, *Climatological Summary for the Hanford Area*, Pacific Northwest Laboratory, Richland, Washington.

PNL-6328, 1988, *Estimation of Ground-Water Travel Time at the Hanford Site: Description, Past Work, and Future Needs*, Pacific Northwest Laboratory, Richland, Washington.

PNL-6415, 1994, *Hanford Site National Environmental Policy Act (NEPA) Characterization*, Rev. 6, Pacific Northwest Laboratory, Richland, Washington.

PNL-6684, 1988, *The Data Collection Component of the Hanford Meteorological Monitoring Program*, Pacific Northwest Laboratory, Richland, Washington.

PNL-6820, 1989, *Hydrogeology of the 200 Areas Low Level Burial Grounds*, Rev. 0, Pacific Northwest Laboratory, Richland, Washington.

PNL-7500, 1990, *1988 Hanford Riverbank Springs Characterization Report*, Pacific Northwest Laboratory, Richland, Washington.

PNL-10285, 1995, *Estimated Recharge Rates at the Hanford Site*, Pacific Northwest Laboratory, Richland, Washington.

PNL-10508, 1995, *Estimation of Natural Ground Water Recharge for the Performance of a Low-Level Waste Disposal Facility at the Hanford Site*, Pacific Northwest Laboratory, Richland, Washington.

PNL-10550, 1995, *Environmental Settings for Selected U.S. Department of Energy Installations - Support Information for the Programmatic Environmental Impact Statement and the Baseline Environmental Management Report*, Pacific Northwest Laboratory, Richland, Washington.

PNNL-11107, 1996, *Climatological Data Summary 1995, with Historical Data*, Rev. 0, Pacific Northwest National Laboratory, Richland, Washington.

Power, M. S., K. J. Coppersmith, R. R. Youngs, D. P. Schwartz, and F. H. Swan III, 1981, *Amendment N.18, Final Safety Analysis Report WNP-2*, Appendix 2.5K, "Seismic Exposure for the WNP-2 and WNP-1/4 Site," Washington Public Power Supply System, Richland, Washington.

Prescott, W. H., and J. C. Savage, 1984, *Crustal Deformation Near Hanford, Washington*, Open-File 797, U.S. Department of Interior Geological Survey, Menlo Park, California.

Reidel, S. P., and N. P. Campbell, 1989, "Structure of the Yakima Fold Belt, Central Washington," *Geologic Guidebook for Washington and Adjacent Areas*, Washington Division of Geology and Earth Resources Information Circular 86, Washington State Department of Natural Resources, Olympia, Washington.

Reidel, S. P., K. R. Fecht, M. C. Hagood, and T. L. Tolan, 1989, "The Geologic Evolution of the Central Columbia Plateau," *Volcanism and Tectonism in the Columbia River Flood-Basalt Province*, Special Paper 239, Geological Society of America, Boulder, Colorado.

Reidel, S. P., K. R. Fecht, K. A. Lindsey, and N. P. Campbell, 1994, "Late Cenozoic Structure and Stratigraphy of South-Central Washington," *Washington Division of Geology and Earth Resources*, Bulletin 80, Washington State Department of Natural Resources, Olympia, Washington.

Reidel, S. P., V. G. Johnson, and N. W. Kline, 1993, *Groundwater Impact Assessment for the 216-U-17 Crib, 200 West Area*, Westinghouse Hanford Company, Richland, Washington.

RHO-BW-SA-563A, 1987, *Quaternary Geology of the Pasco Basin, Washington*, Rockwell Hanford Operations, Richland, Washington.

RHO-BWI-C-120, 1981, *Flood Risk Analysis of Cold Creek Near the Hanford Site*, Rockwell Hanford Operations, Richland, Washington.

RHO-BWI-ST-14, 1981, *Subsurface Geology of the Cold Creek Syncline*, Rockwell Hanford Operations, Richland, Washington.

RHO-BWI-ST-19, 1983, *Preliminary Interpretation of Tectonic Stability of the Reference Repository Location - Cold Creek Syncline, Hanford Site*, Rockwell Hanford Operations, Richland, Washington.

RHO-RE-ST-12P, 1984, *An Assessment of Aquifer Intercommunication with B Pond-Gable Mountain Pond Area of the Hanford Site*, Rev. 0, Rockwell Hanford Operations, Richland, Washington.

RHO-ST-23, 1979, *Geology of the Separations Areas, Hanford Site, South-Central Washington*, Rockwell Hanford Operations, Richland, Washington.

RHO-ST-42, 1981, *Hydrology of the Separations Area*, Rev. 0, Rockwell Hanford Operations, Richland, Washington.

Routson, R. C., and V. G. Johnson, 1990, "Recharge for the Hanford Site 200 Areas Plateau," *Northwest Science*, Vol. 64, no. 3, pp. 150-158.

Shannon and Wilson, 1993, *Geologic Studies of the Columbia River Basalt Structures and Age of Deformation, The Dalles-Umatilla Region, Boardman Nuclear Project*, Shannon and Wilson, Inc., Seattle, Washington.

Swanson, L. C., 1994, *Infiltration Rate and Hydraulic Conductivity Results* (internal letter 86B20-94-001 to R. S. Pavlina, June 27), Westinghouse Hanford Company, Richland, Washington.

Tolan, T. L., S. P. Reidel, M. H. Beeson, J. L. Anderson, K. R. Fecht, and D. A. Swanson, 1989, "Revisions to the Estimates of the Areal Extent and Volume of the Columbia River Basalt Group," *Volcanism and Tectonism in the Columbia River Flood-Basalt Province*, Special Paper 239, Geological Society of America, Boulder, Colorado.

UCRL-15910, 1990, *Design and Evaluation Guidelines for DOE Facilities Subjected to Natural Phenomena Hazards*, University of California Research Laboratory, Berkeley, California.

UCRL-21069, 1988, *Probabilistic Flood Hazard Assessment for the N Reactor Hanford, Washington*, University of California Research Laboratory, Berkeley, California.

UCRL-53526, 1985, *Natural Phenomena Hazards Modeling Project: Extreme Wind/Tornado Hazard Models for Department of Energy Sites*, Rev. 1, University of California Research Laboratory, Berkeley, California.

USGS, 1979a, *Reconnaissance Geologic Map of the Columbia River Basalt Group in Eastern Washington and Northern Idaho*, Open-File Report 79-1363, U.S. Geological Survey, Washington, D.C.

USGS, 1979b, *Revisions in Stratigraphic Nomenclature of the Columbia River Basalt Group*, Bulletin 1457, U.S. Geological Survey, Washington, D.C.

USGS, 1987a, *Subsurface Transport of Radionuclides in Shallow Deposits of the Hanford Nuclear Reservation - Review of Selected Previous Work and Suggestions for Further Study*, Open-File Report 87-222, U.S. Geological Survey, Denver, Colorado.

USGS, 1987b, *Volcanic Hazards with Regards to Siting Nuclear-Power Plants in the Pacific Northwest*, Open-File Report 87-297, U.S. Geological Survey, Cascades Volcano Observatory, Vancouver, Washington.

USGS, 1995a, *Using Chloride and Chlorine-36 as Soil-Water Tracers to Estimate Deep Percolation at Selected Locations on the U.S. Department of Energy Hanford Site, Washington*, Open-File Report 94-514, U.S. Geological Survey, Tacoma, Washington.

USGS, 1995b, *Volcanic Hazards in the Mount Adams Region, Washington*, Open-File Report 95-492, U.S. Geological Survey, Washington, D.C.

Waters, A. C., 1961, "Stratigraphic and Lithologic Variations in the Columbia River Basalt," *American Journal of Science*, Vol. 259, pp. 583-611.

WHC-EP-0698, 1994, *Groundwater Impact Assessment Report for the 216-U-14 Ditch*, Rev. 0, Westinghouse Hanford Company, Richland, Washington.

WHC-MR-0023, 1989, *Evaluation of Seismic Hazard for Nonreactor Facilities, Hanford Reservation, Hanford, Washington*, Westinghouse Hanford Company, Richland, Washington.

WHC-MR-0391, 1992, *Field Trip Guide to the Hanford Site*, Westinghouse Hanford Company, Richland, Washington.

WHC-SD-EN-TI-014, 1992, *Hydrogeologic Model for 200 West Groundwater Aggregate Area*, Rev. 0, Westinghouse Hanford Company, Richland, Washington.

WHC-SD-EN-TI-019, 1992, *Hydrogeologic Model for the 200 East Groundwater Aggregate Area*, Rev. 0, Westinghouse Hanford Company, Richland, Washington.

WHC-SD-ER-TI-003, 1991, *Geology and Hydrology of Hanford Site: A Standardized Text for Use in Westinghouse Hanford Company Documents and Reports*, Rev. 0, Westinghouse Hanford Company, Richland, Washington.

WHC-SD-GN-ER-30009, 1992, *Bibliography and Summary of Geotechnical Studies at the Hanford Site*, Westinghouse Hanford Company, Richland, Washington.

WHC-SD-SNF-TI-013, 1995, *K Basin Environmental Impact Statement Technical Input*, Rev. 0, Westinghouse Hanford Company, Richland, Washington.

WHC-SD-SQA-TI-013, 1990, *Safety and Risk Assessment Technical Information to Support Plutonium Finishing Plant Restart*, Rev. 2, Westinghouse Hanford Company, Richland, Washington.

WHC-SD-W236A-TI-002, 1996, *Probabilistic Seismic Hazard Analysis, DOE Hanford Site, Washington*, Rev. 1, Westinghouse Hanford Company, Richland, Washington.

WHC-SD-WM-ES-387, 1996, *Probability, Consequences, and Mitigation for Lightning Strikes of Hanford High Level Waste Tanks*, Rev. 0, Westinghouse Hanford Company, Richland, Washington.

WHC-SD-WM-SAR-023, 1992, *242-A Evaporator/Crystallizer Safety Analysis Report*, Rev. 1, Westinghouse Hanford Company, Richland, Washington.

WHC-SD-WM-TI-385, 1989, *B Plant Preliminary Accident Analysis*, Rev. 0, Westinghouse Hanford Company, Richland, Washington.

Figure C1-1. Location of the Hanford Site, Principal Cities and Towns in the Vicinity of the Site, and Prominent Natural Features in Washington State.

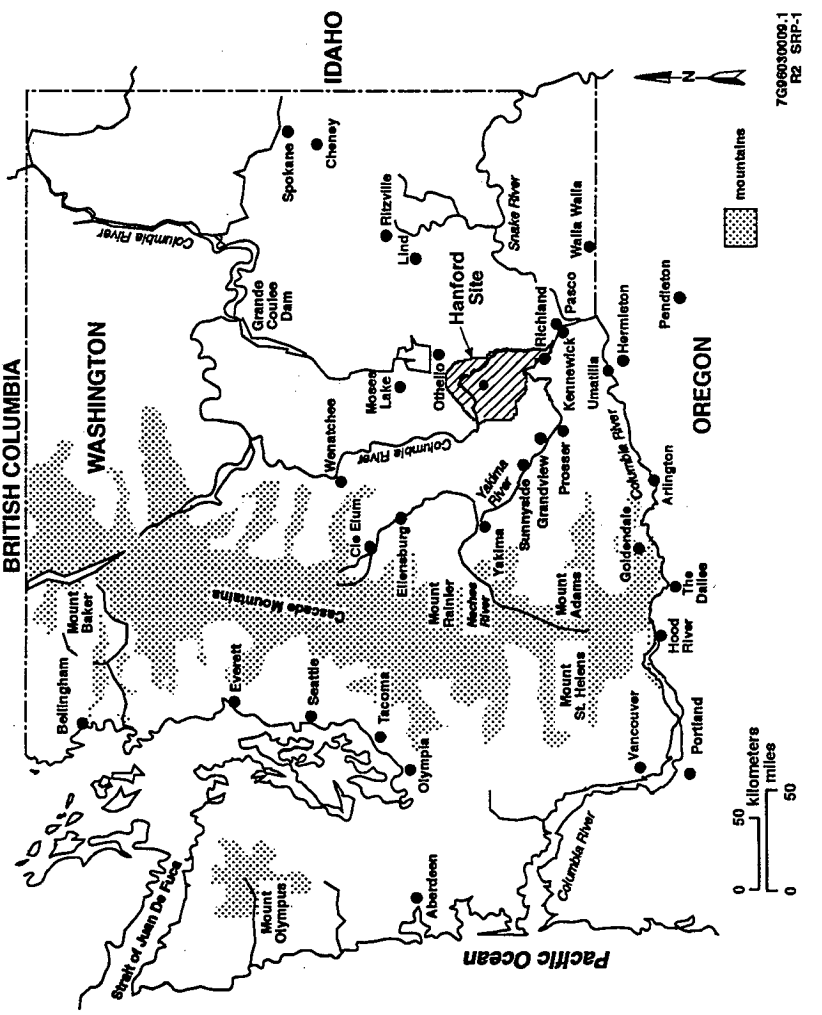

Figure C1-2. Prominent Natural Features of the Hanford Site Vicinity.

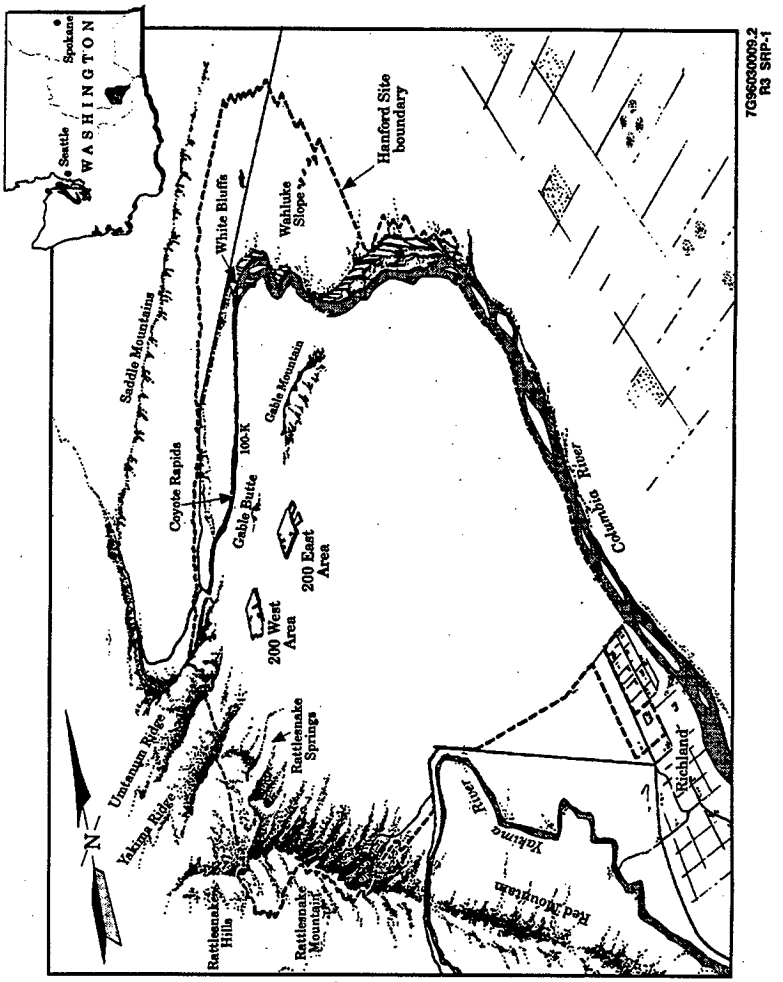

Figure C1-3. Location of the Hanford Site with Respect to Local Counties and Regional Highways.

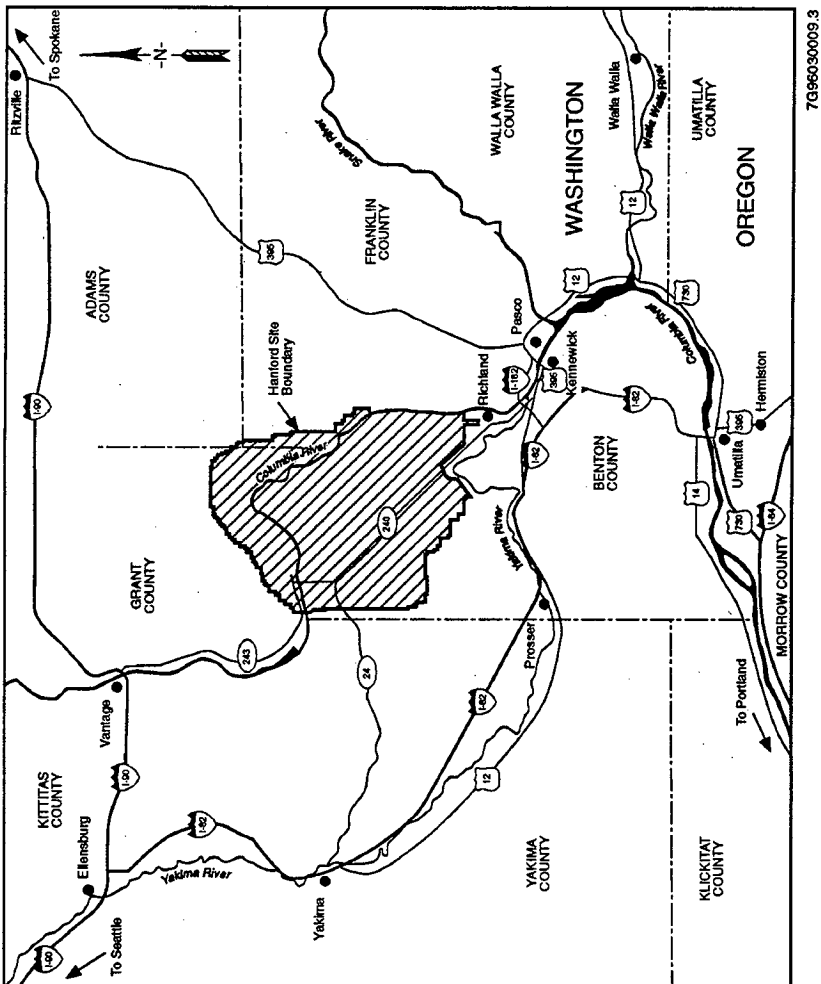

Figure C1-4. Hanford Site Map Showing Operational and Multipurpose Area Boundaries.

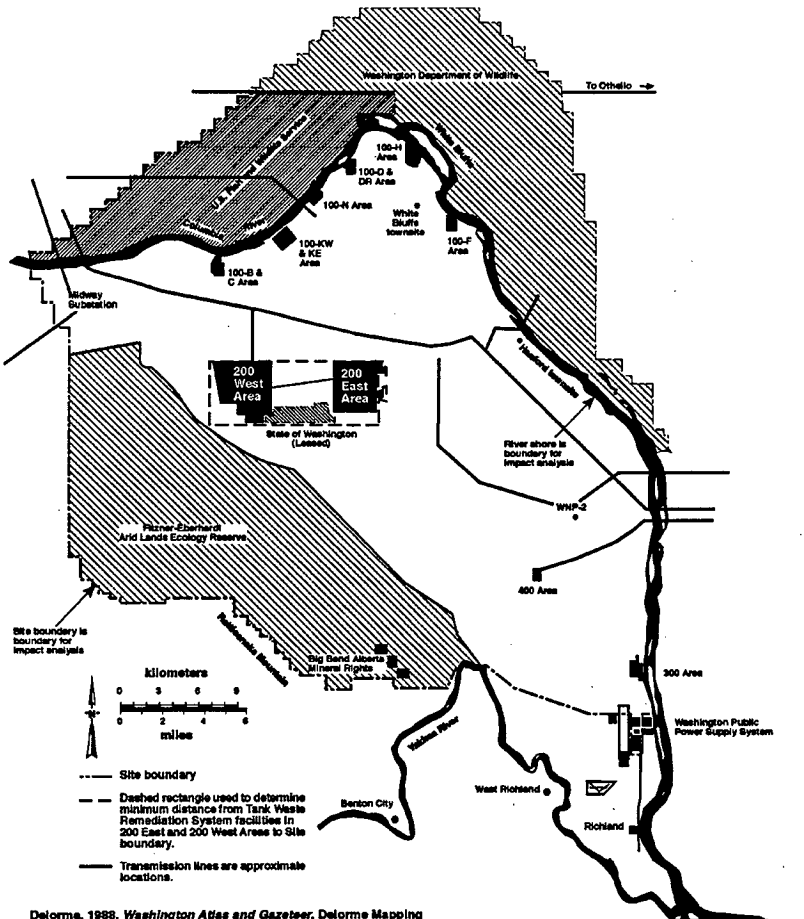

Delorme, 1988, *Washington Atlas and Gazeteer*, Delorme Mapping Company, Freeport, Maine.

WNP = Washington Nuclear Plant.

7G96030009.10
R7 SRPBIO-1

Figure C1-5. Hanford Site Map Showing Surrounding Facilities and Access Routes.

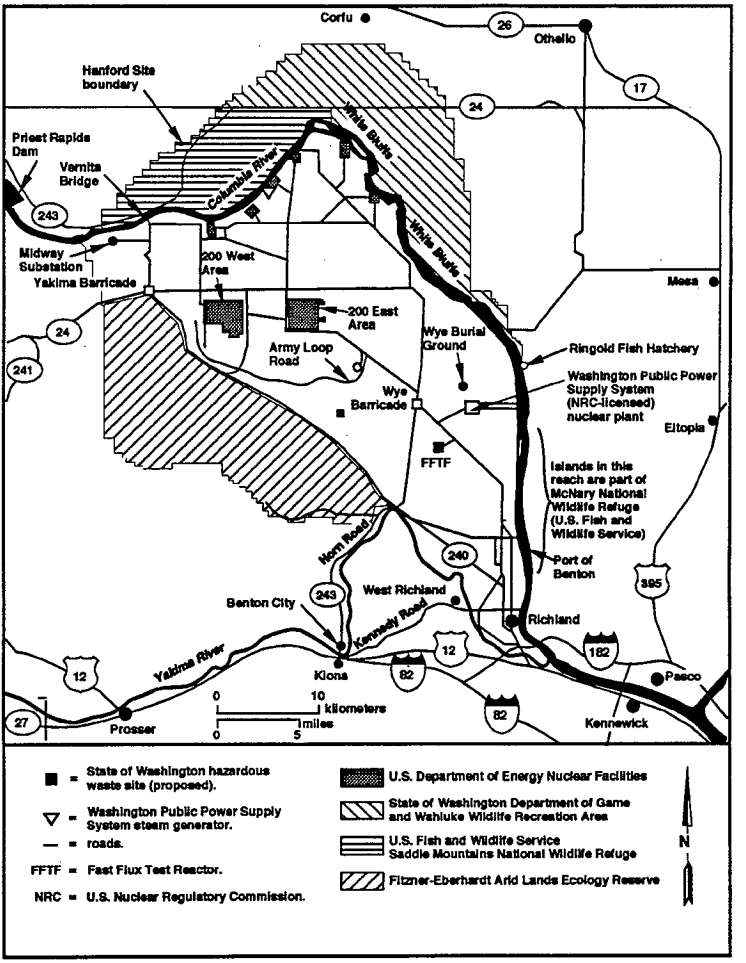

7G96030009.4
R7 SRP-1

Figure C1-6. Hanford Site Topographic Map and Cross-Section.

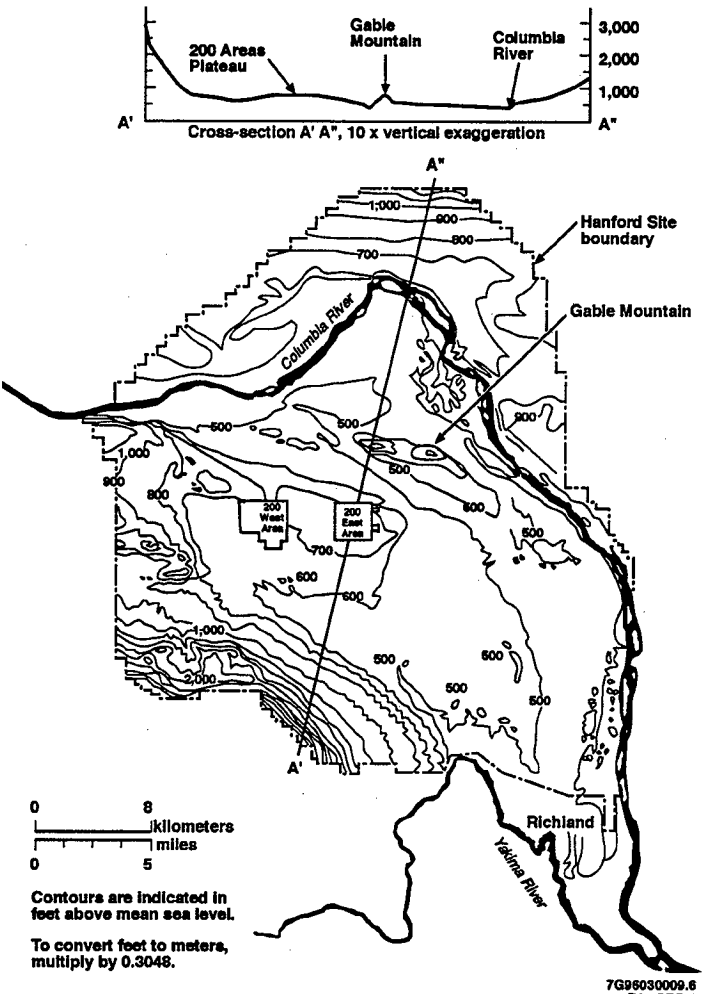

Figure C1-7. Map of the 200 East Area Facilities, Including Tank Waste Remediation System Facilities.

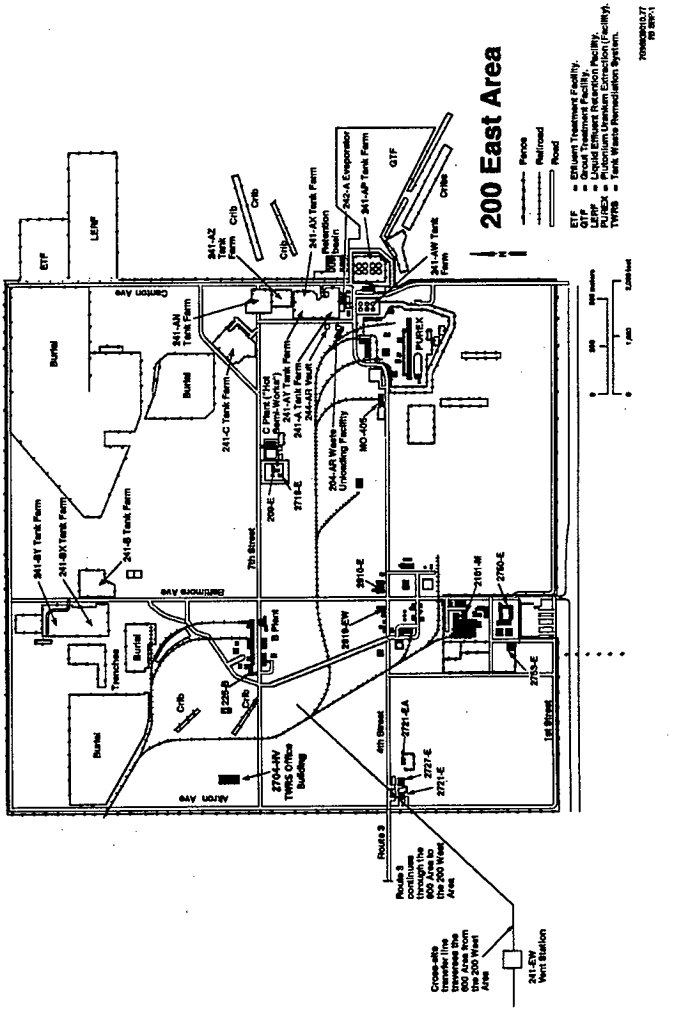

Figure C1-8. Map of the 200 West Area Facilities, Including Tank Waste Remediation System Facilities.

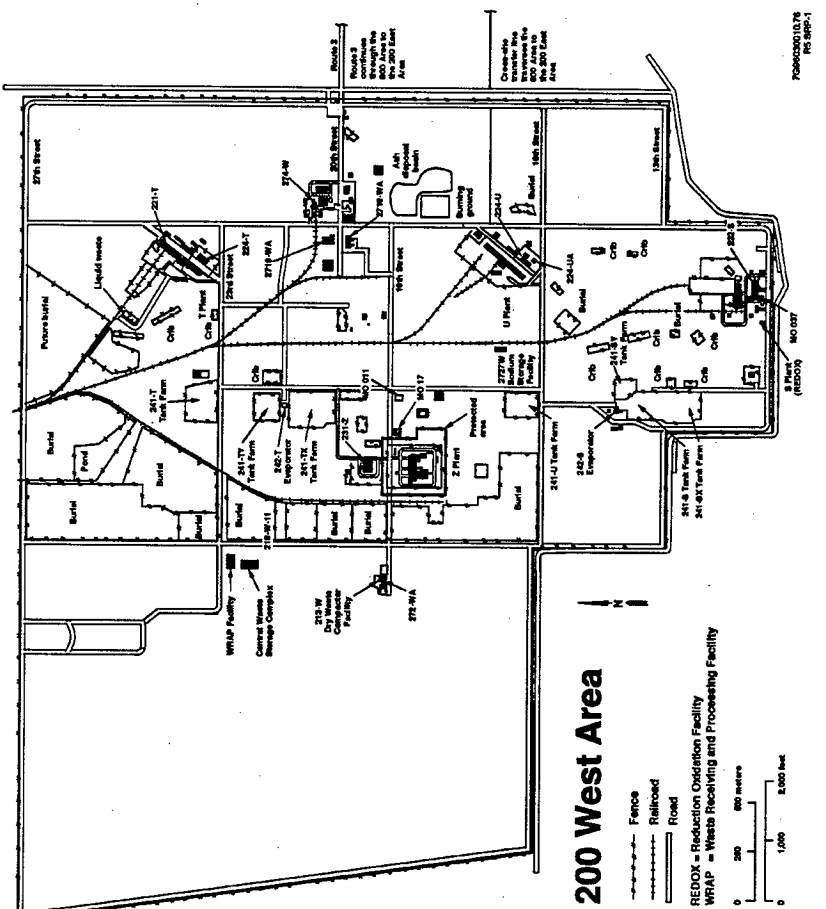

Figure C1-9. Counties and Major Cities Within 80-km (50-mi) of the Hanford Site.

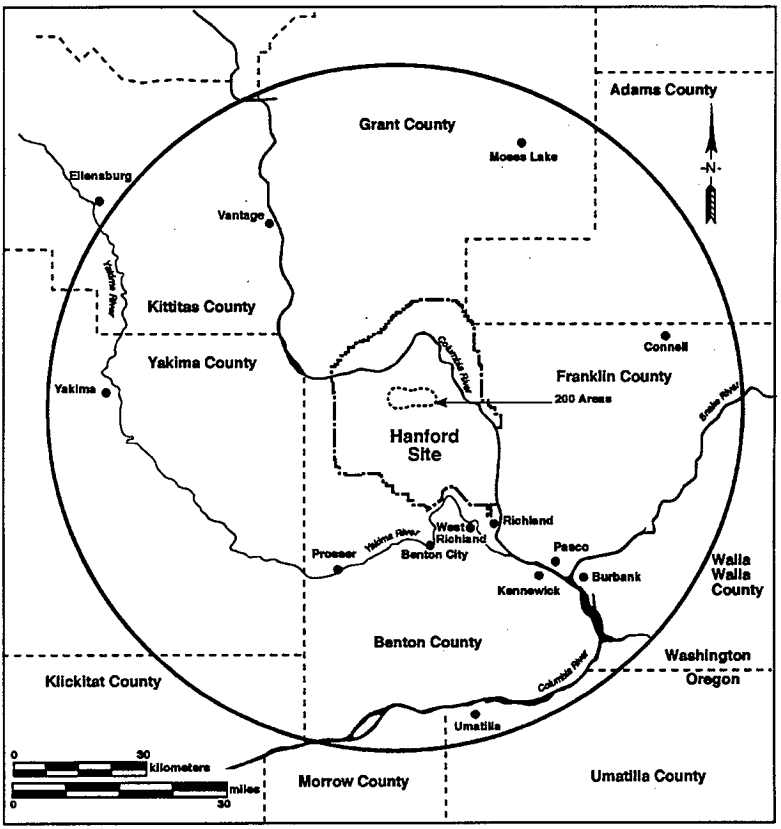

Figure C1-10. Estimated 1996 Onsite Employee Distribution in the 200 East Area by Zones.

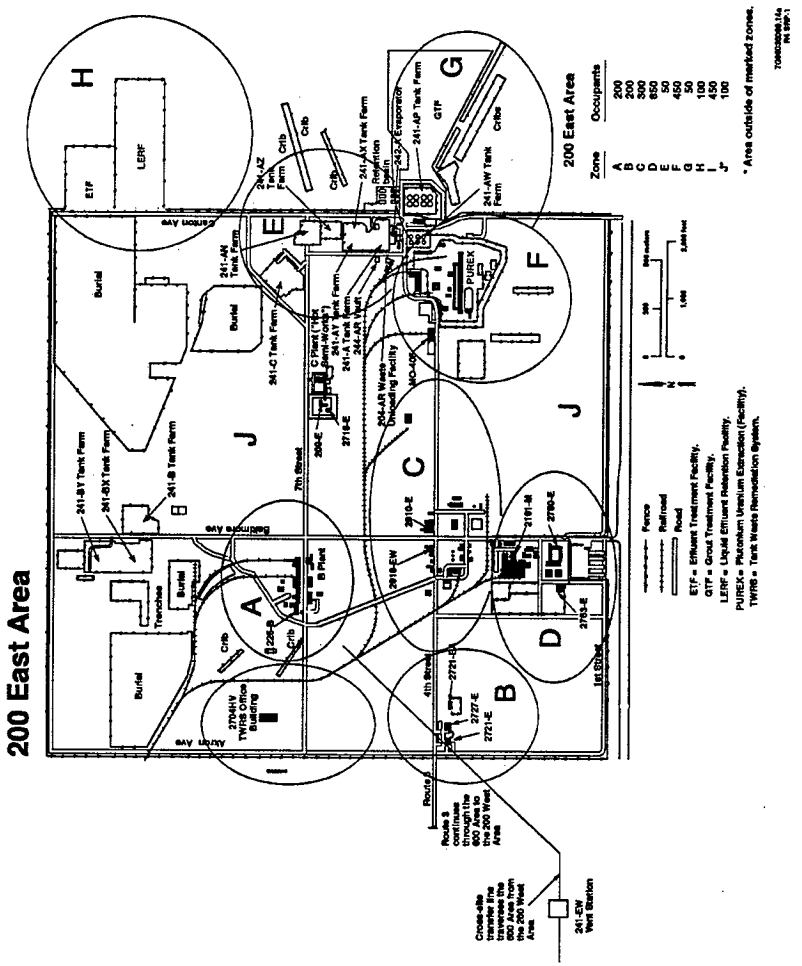

Figure C1-11. Estimated 1996 Onsite Employee Distribution in the 200 West and 600 Areas by Zones.

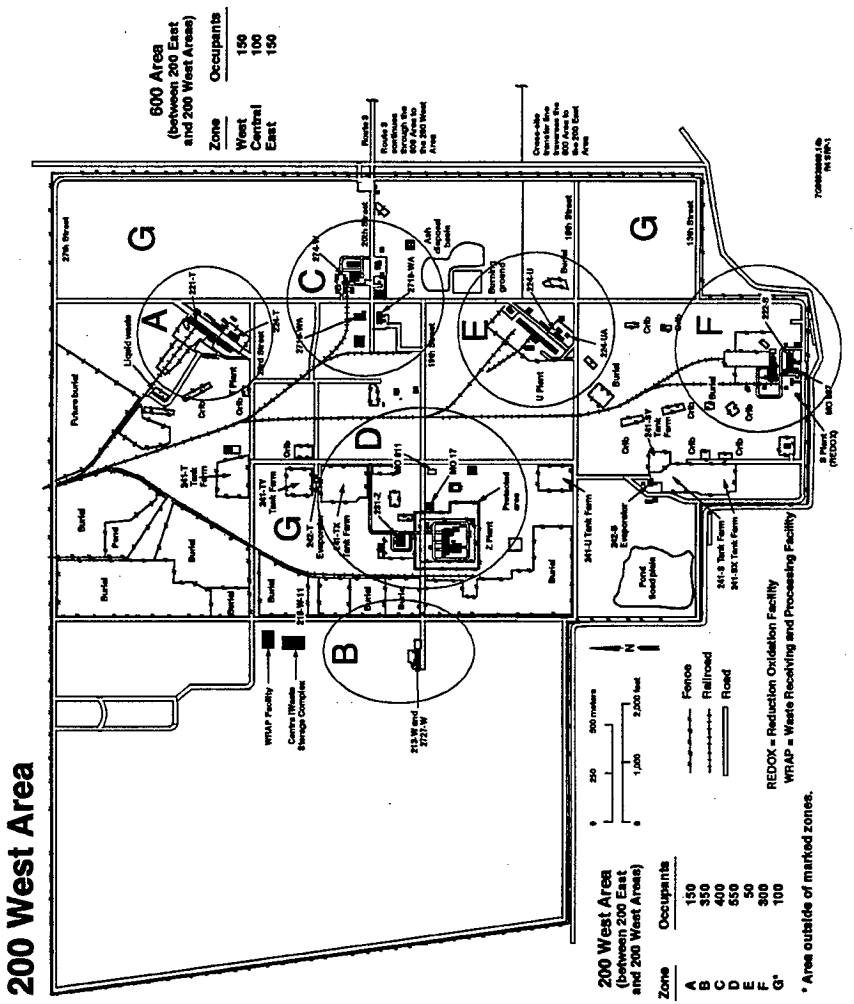

Figure C1-12. Location of the Yakima Firing Center with Respect to the Hanford Site.

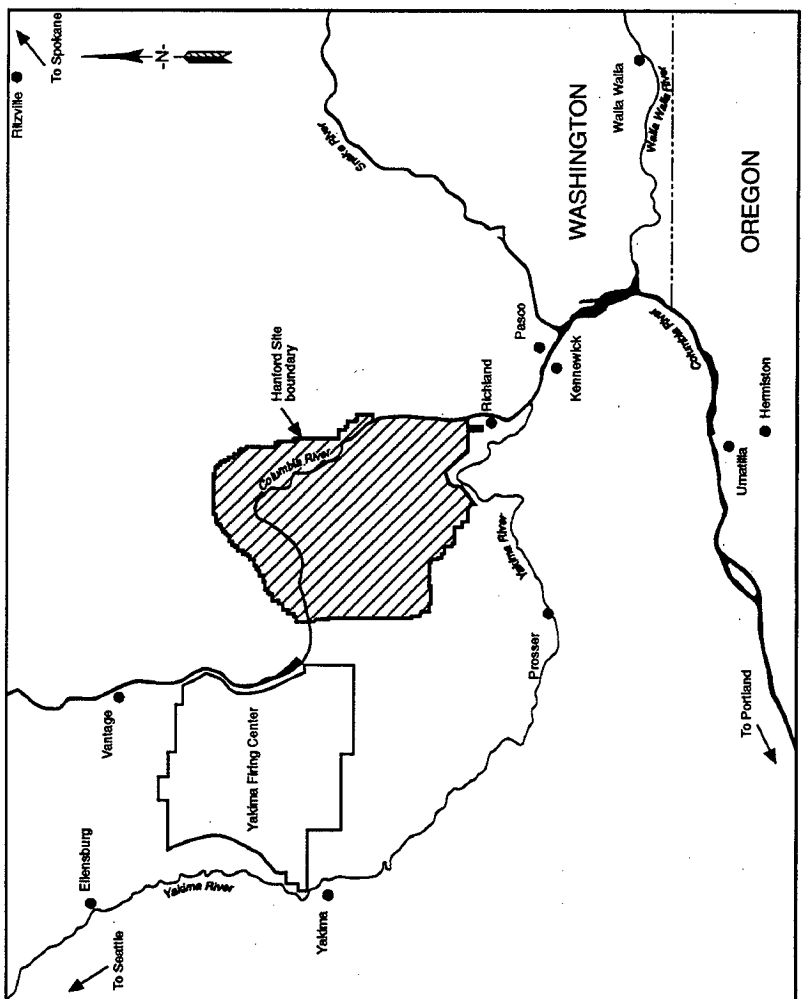

Figure C1-13. Hanford Site Meteorological Monitoring Network.

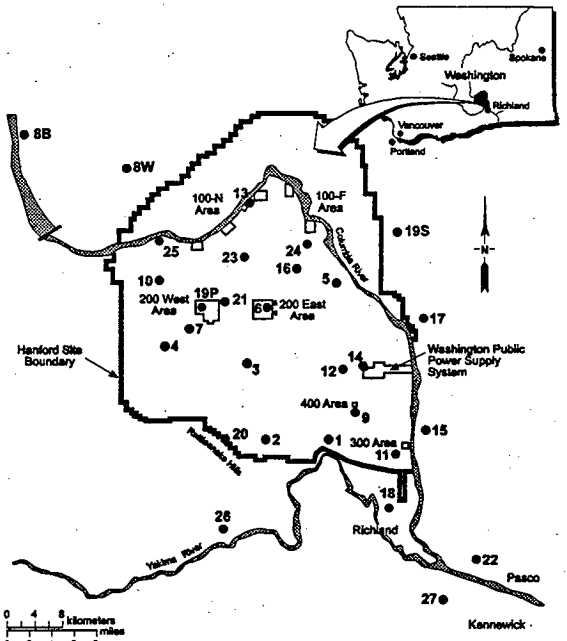

Station Number	Station Name	Station Number	Station Name
1	Prosser Barricade	14	Washington Public Power Supply System
2	Emergency Operations Center	15	Franklin County
3	Army Loop Road	16	Gable Mountain
4	Rattlesnake Springs	17	Ringold Formation
5	Edna	18	Richland Airport
6	200 East Area	19P	Plutonium Finishing Plant
7	200 West Area	19S	Sagehill (inactive)
8B	Beverly	20	Rattlesnake Mountain
8W	Wahluke Slope (inactive)	21	Hanford Meteorological Station (125 m [410 ft])
9	Fast Flux Test Facility (60 m [197 ft])	22	Tri-Cities Airport
10	Yakima Barricade	23	Gable West
11	300 Area (60 m [197 ft])	24	100-F Area
12	Wye Barricade	25	Vernita Bridge
13	100-N Area (60 m [197 ft])	26	Benton City
		27	Vista

Note: All network stations are 9.1 m (29.9 ft) above the ground unless otherwise indicated.

7Q96030009.15
R2 SRP-1

Figure C1-14. Topographical Features that Impact the Hanford Site Climate.

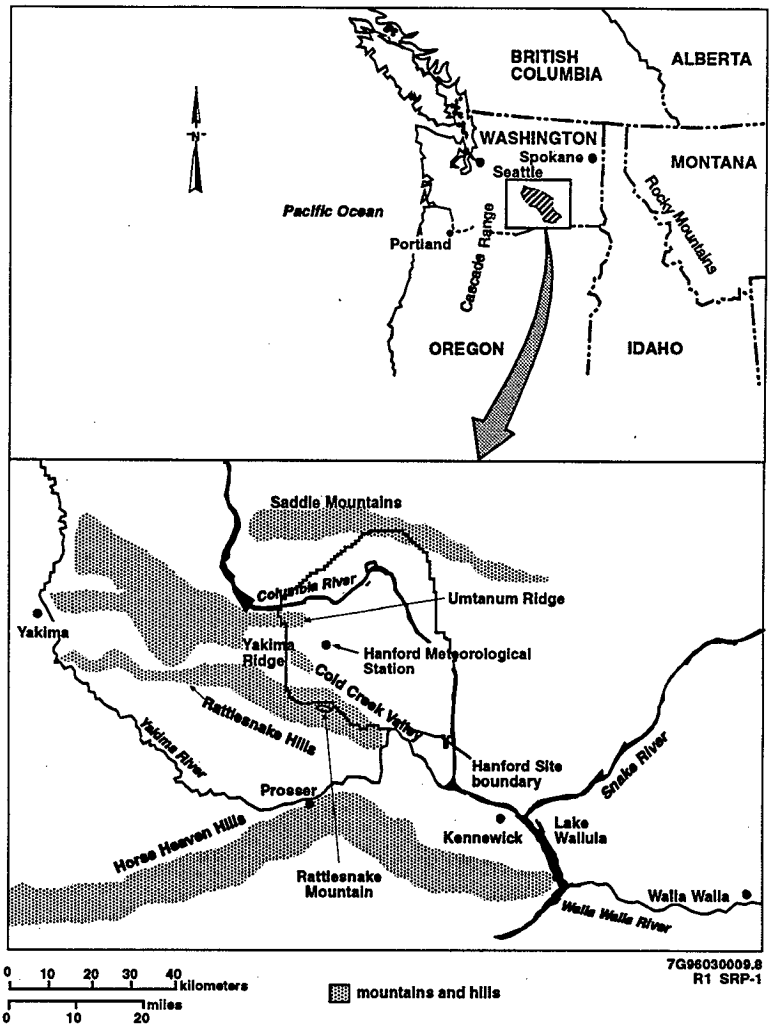

Figure C1-15. Maximum Probable Precipitation Hazard Curve.

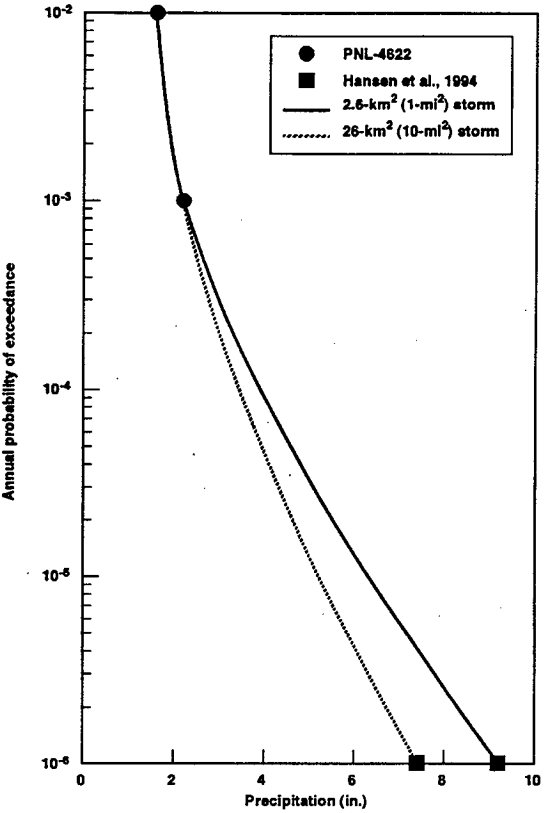

Hansen, E. M., D. D. Fenn, P. Corrigan, Vogel, L. C. Schreiner, and R. W. Stoch, 1994, Probable Maximum Precipitation - Pacific Northwest States, Hydrometeorological Report No. 57, National Weather Service, Silver Spring, Maryland.

PNL-4822, 1983, Climatological Summary for the Hanford Area, Pacific Northwest Laboratory, Richland, Washington.

To convert inches to millimeters, multiply by 25.4.

7G96030009.16a
R3 SRP-1

Figure C1-16. Hanford Site Snow Depth Probabilities Based on the Greatest Depth of Snow on the Ground at the Site from Winter of 1946-1947 to Winter of 1980-1981.

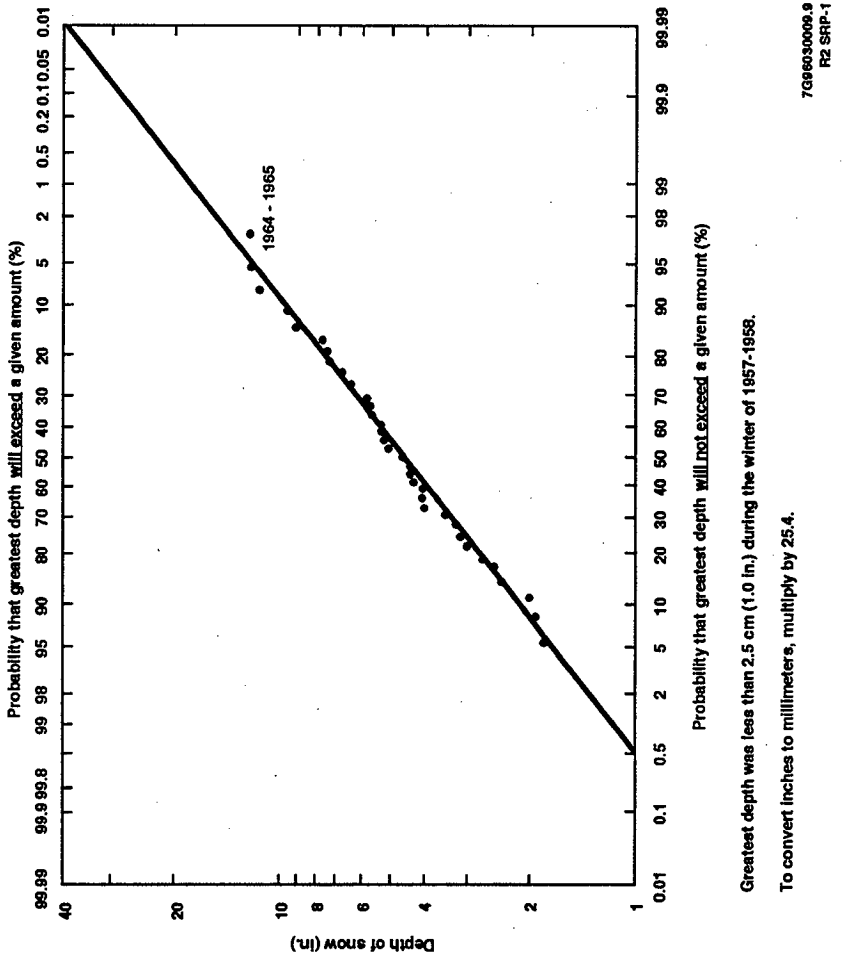

Figure C1-17. Hanford Site Wind Hazard Curves Based on Recommended Design Wind Speeds.

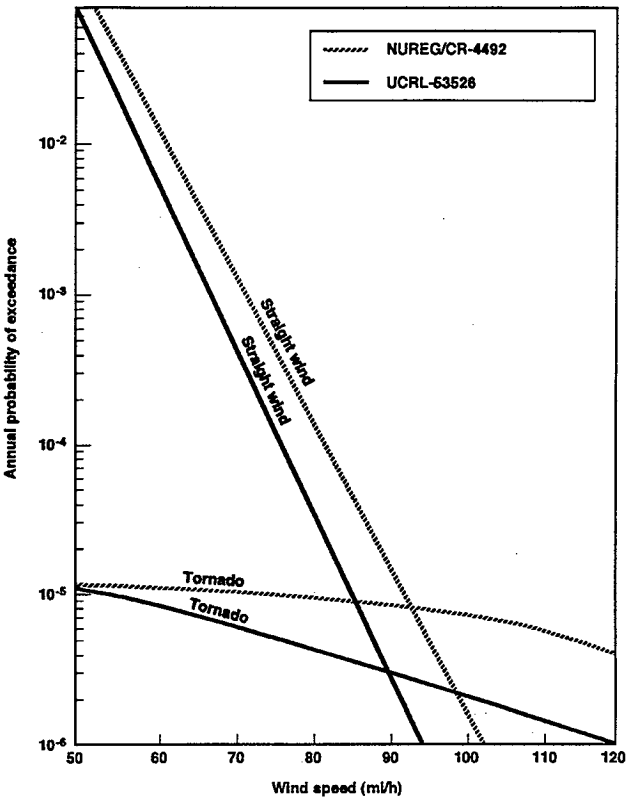

UCRL-53526, 1985, ***Natural Phenomena Hazards Modeling Project: Extreme Wind/Tornado Hazard Models for Department of Energy Sites,*** Rev. 1, University of California Research Laboratory, Berkeley, California.

NUREG/CR-4492, 1986, ***Methodology for Estimating Extreme Winds for Probabilistic Risk Assessments,*** Rev. 0, U.S. Nuclear Regulatory Commission, Washington, D.C.

To convert mi/h to km/h, multiply by 1.609.

H95120284.1
R4 SRP-1

Figure C1-18. Wind Rose and Wind Speed Histogram for the 200 East Area.

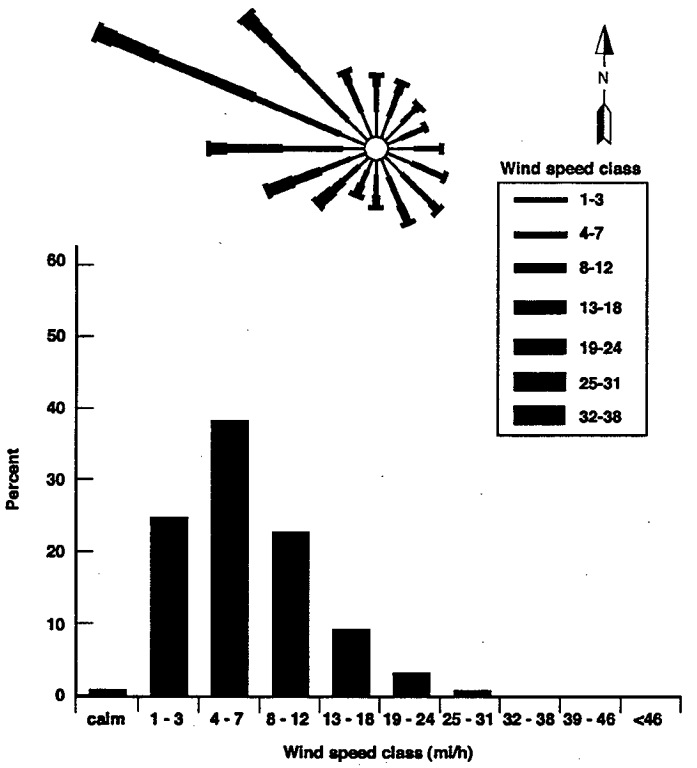

Figure C1-19. Wind Rose and Wind Speed Histogram for the 200 West Area.

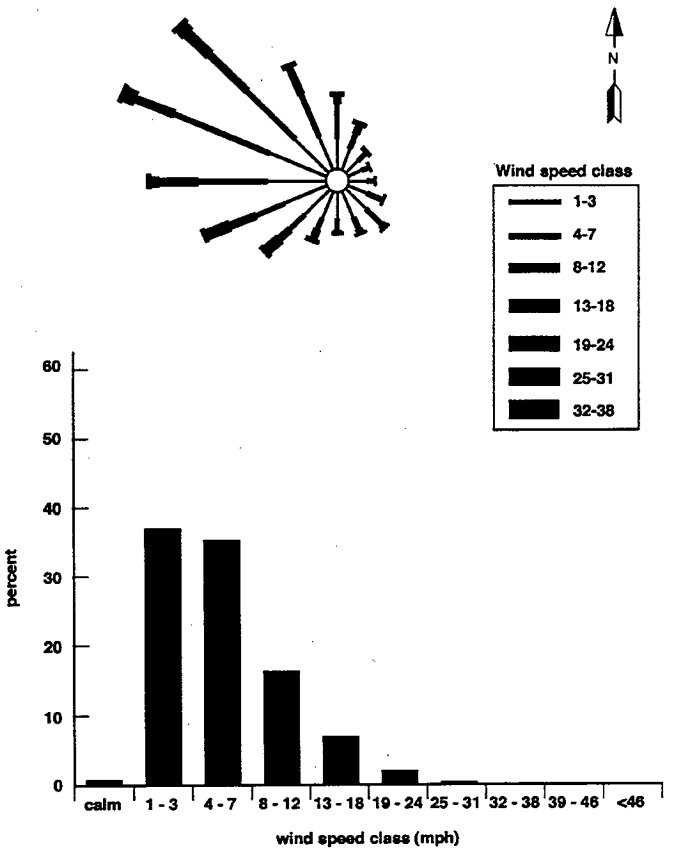

To convert mph to km/h, multiply by 1.609.
Wind direction is toward the center of the wind rose.

Figure C1-20. Location of Surface Water on the Hanford Site.

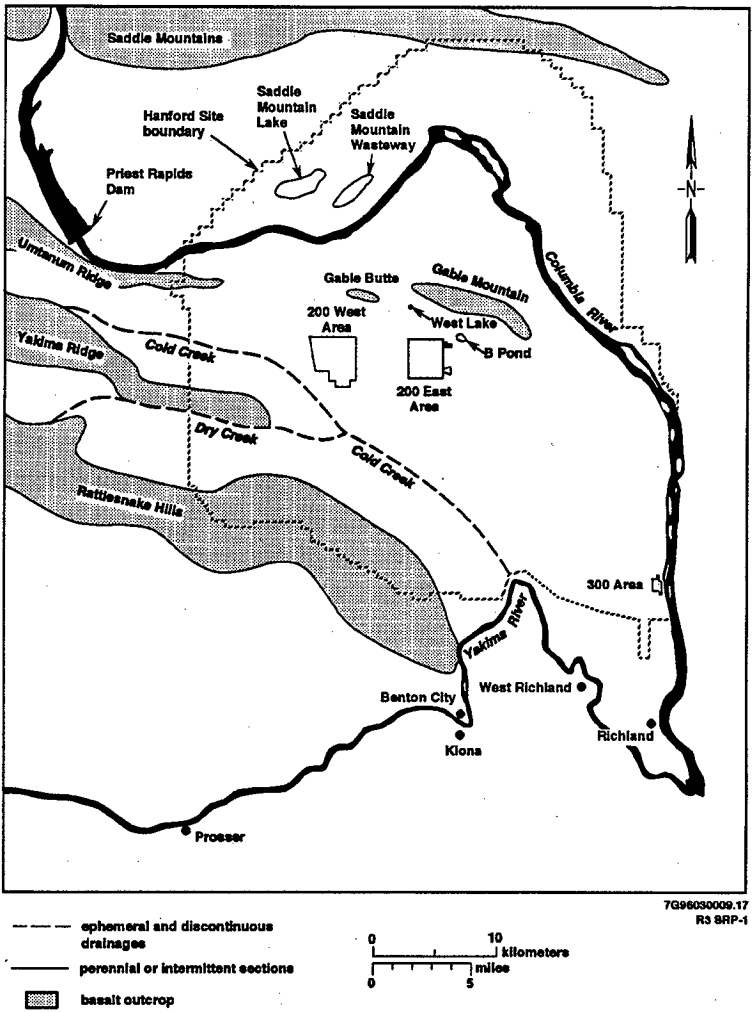

Figure C1-21. Location of Dams on the Columbia River and River Drainage Area.

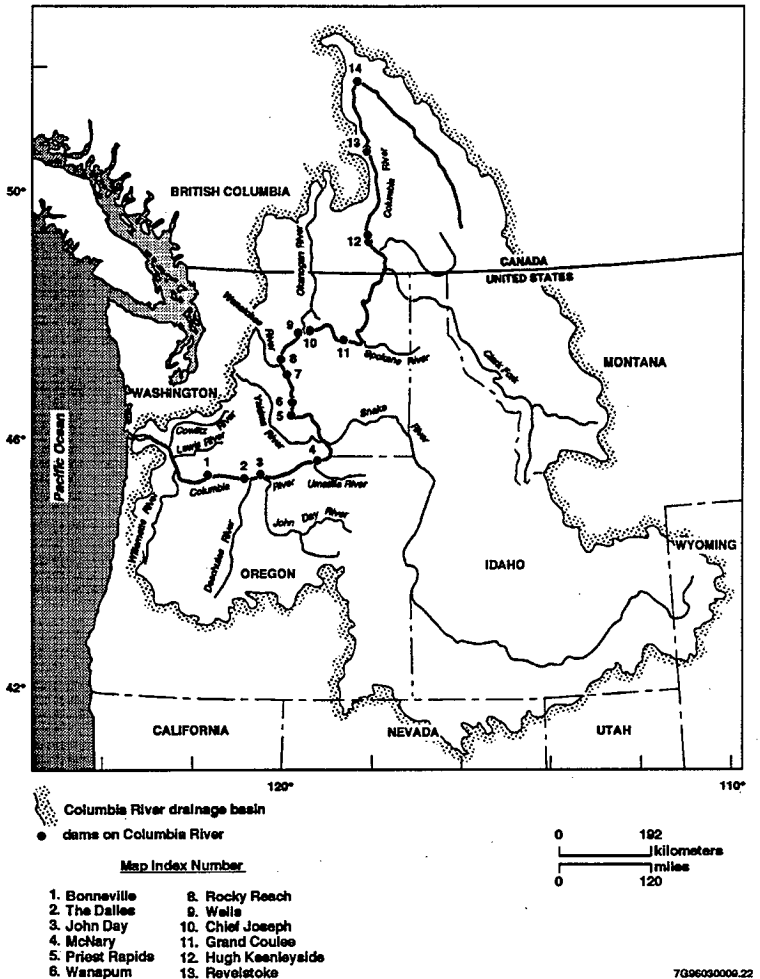

Figure C1-22. Location and Elevation of Columbia River Mile 365.

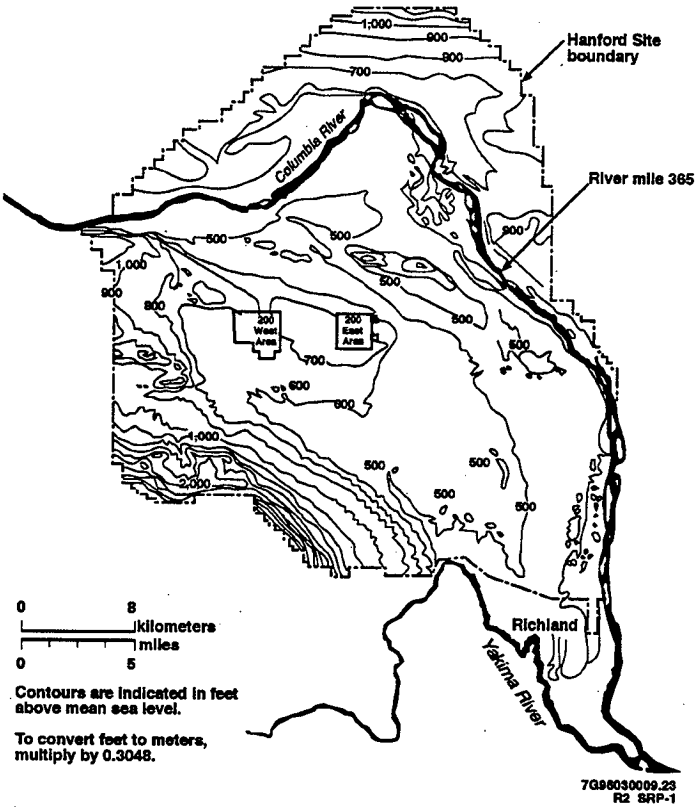

Figure C1-23. Location of Ephemeral and Discontinuous Cold Creek and Dry Creek and the Extent of the Probable Maximum Flood in the Cold Creek Area.

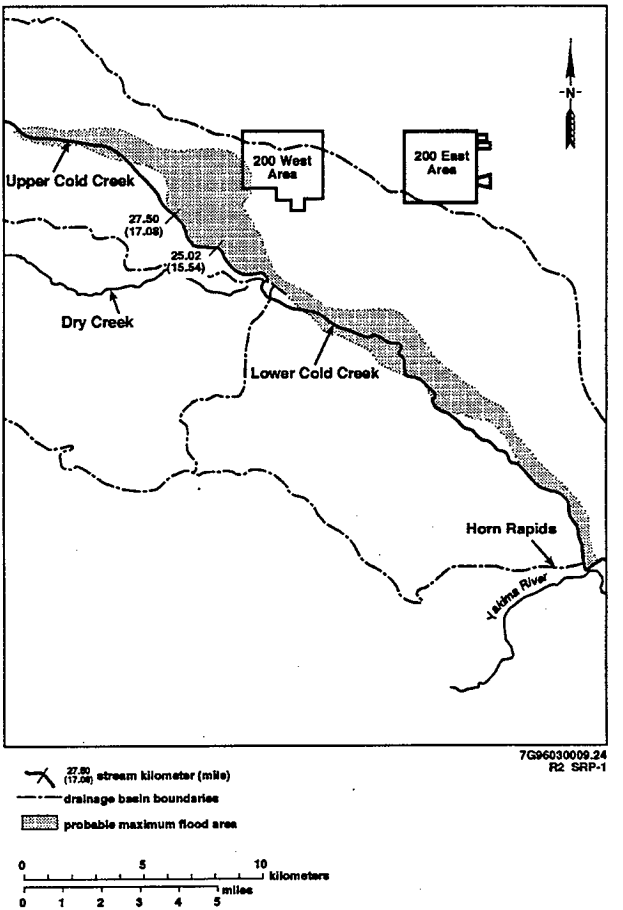

Figure C1-24. Characteristic Stratigraphy, Lithology, and Hydrogeologic Conditions on the Hanford Site.

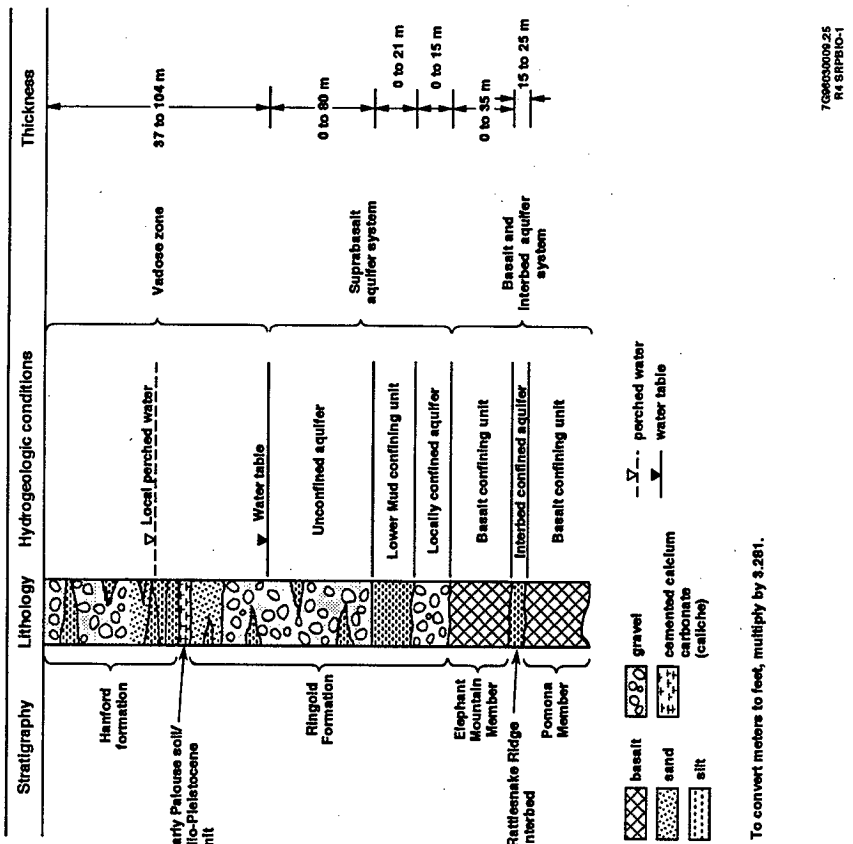

Figure C1-25. Conceptual Model of Hypothetical Sources of Tank Leaks and Potential Pathways for Leaked Waste to Reach Groundwater.

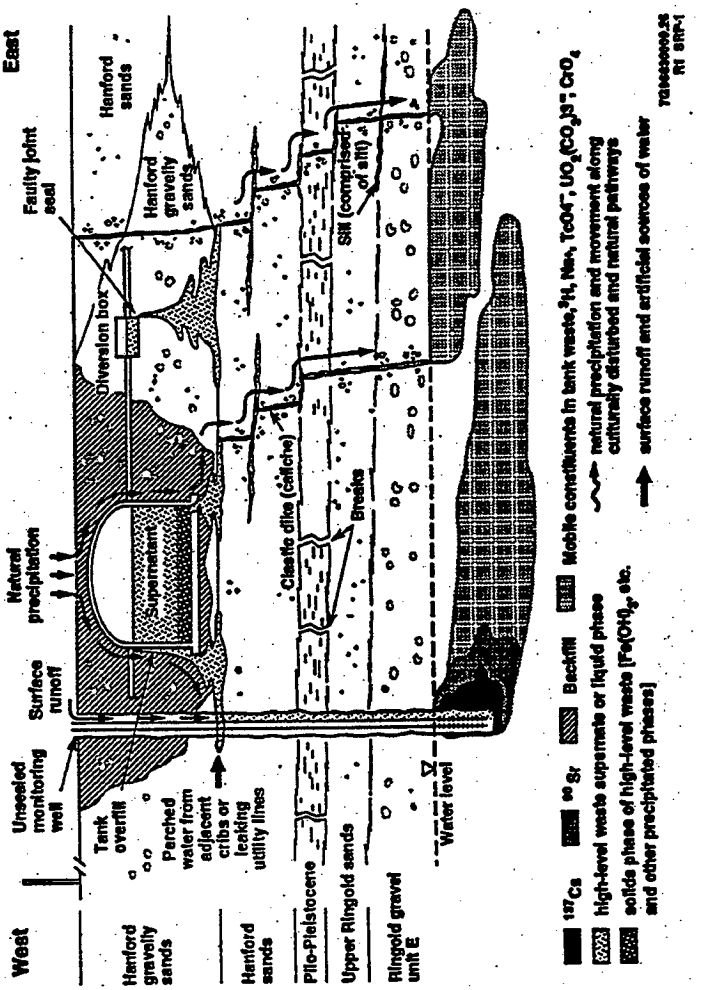

Figure C1-26. Groundwater Contours and Steady Streamlines from the 200 East and 200 West Areas Waste Sites to the Columbia River.

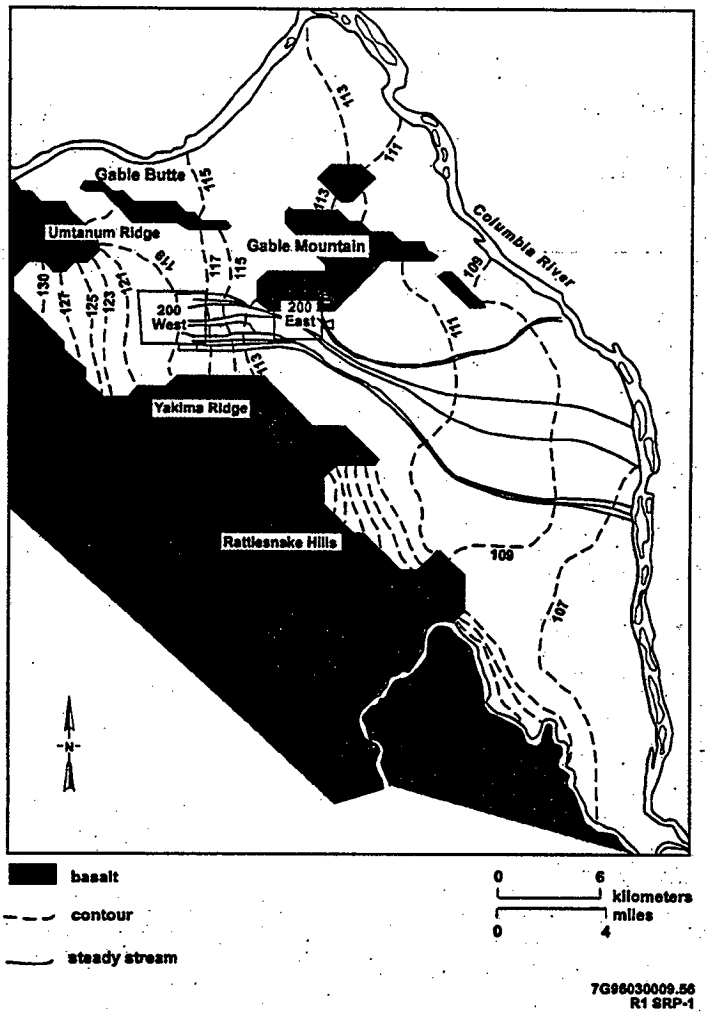

Figure C1-27. Location of the Hanford Site, Pasco Basin, and Columbia Plateau.

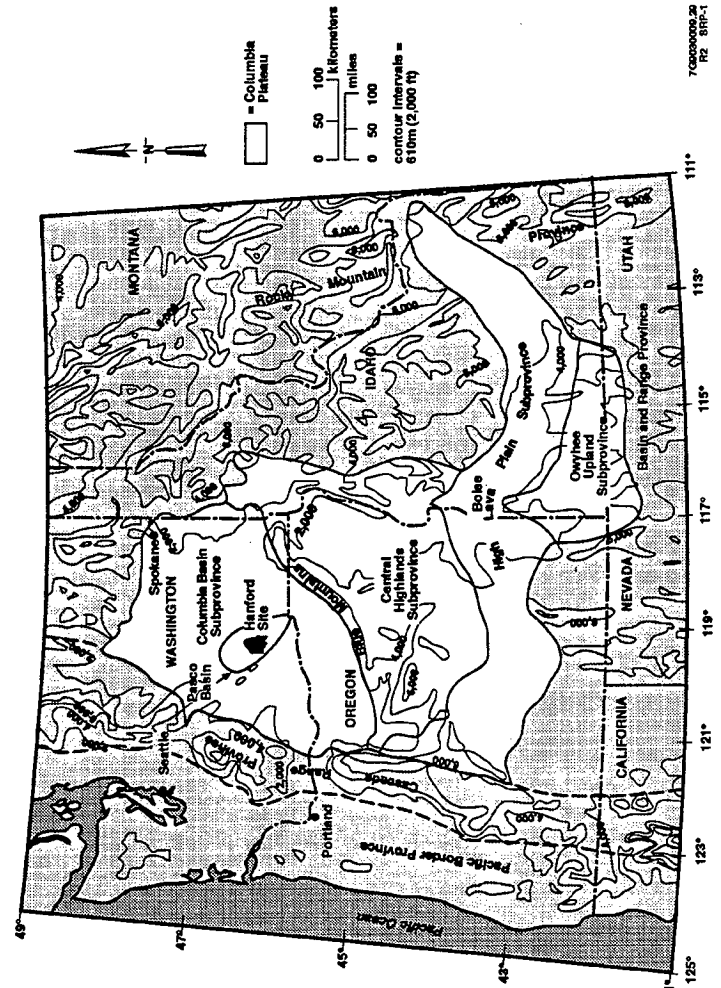

Figure C1-28. Physiographic Provinces of the Columbia Basin.

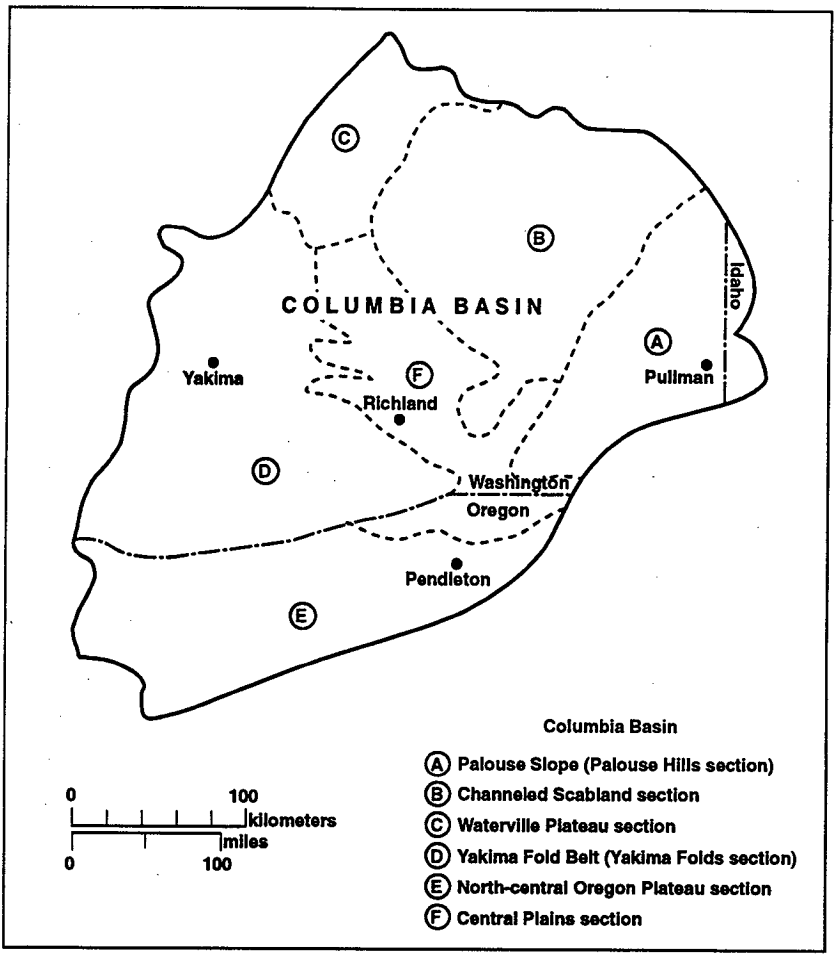

7G96030002.57
R1 SRP-1

Figure C1-29. Generalized Stratigraphy of the Columbia River Basalt Group.

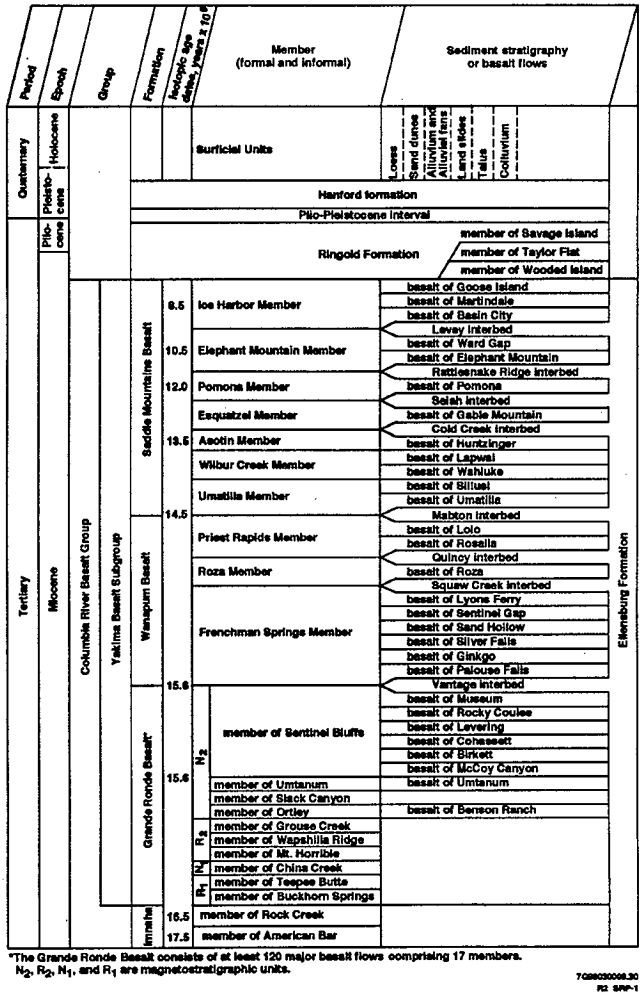

*The Grande Ronde Basalt consists of at least 120 major basalt flows comprising 17 members.
N_2, R_2, N_1, and R_1 are magnetostratigraphic units.

7C9630008.30
R2 SRP-1

Figure C1-30. Idealized Suprabasalt Subsurface Stratigraphy of the Hanford Site.

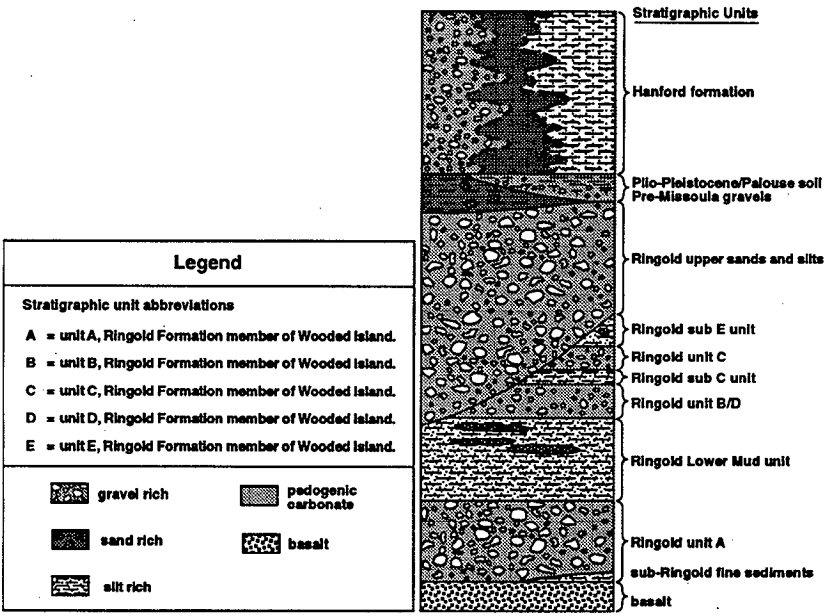

7G96030009.31a
R2 SRP-1

Figure C1-31. Annual Probability of Volcanic Ash Accumulation Greater Than 10 mm (0.4 in.) on the Hanford Site.

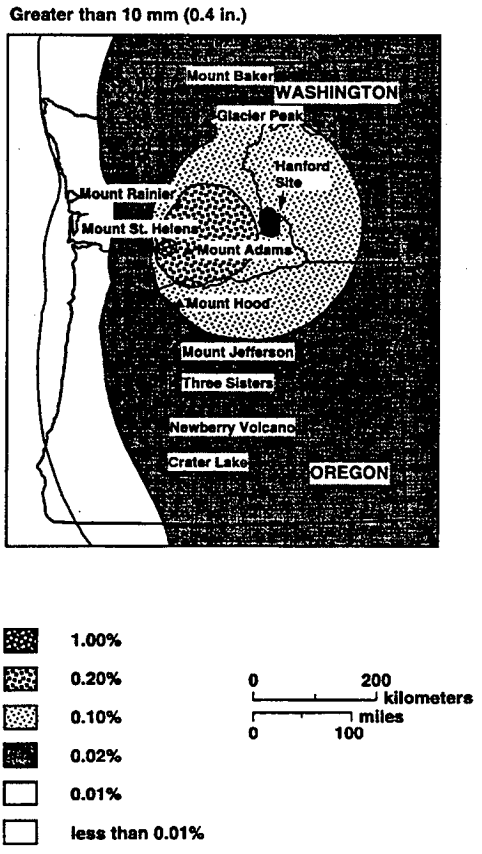

USGS, 1987b, *Volcanic Hazards with Regards to Siting Nuclear-Power Plants in the Pacific Northwest*, Open-File Report 87-297, U.S. Geological Survey, Cascades Volcano Observatory, Vancouver, Washington.

7G96030009.32A
R2 SRP-1

Figure C1-32. Annual Probability of Volcanic Ash Accumulation Greater Than 100 mm (4 in.) on the Hanford Site.

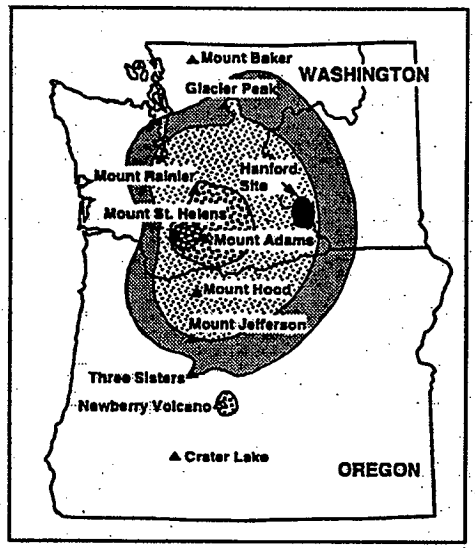

USGS, 1987b, *Volcanic Hazards with Regards to Siting Nuclear-Power Plants in the Pacific Northwest*, Open-File Report 87-297, U.S. Geological Survey, Cascades Volcano Observatory, Vancouver, Washington.

Figure C1-33. Structural Map of the Yakima Fold Belt.

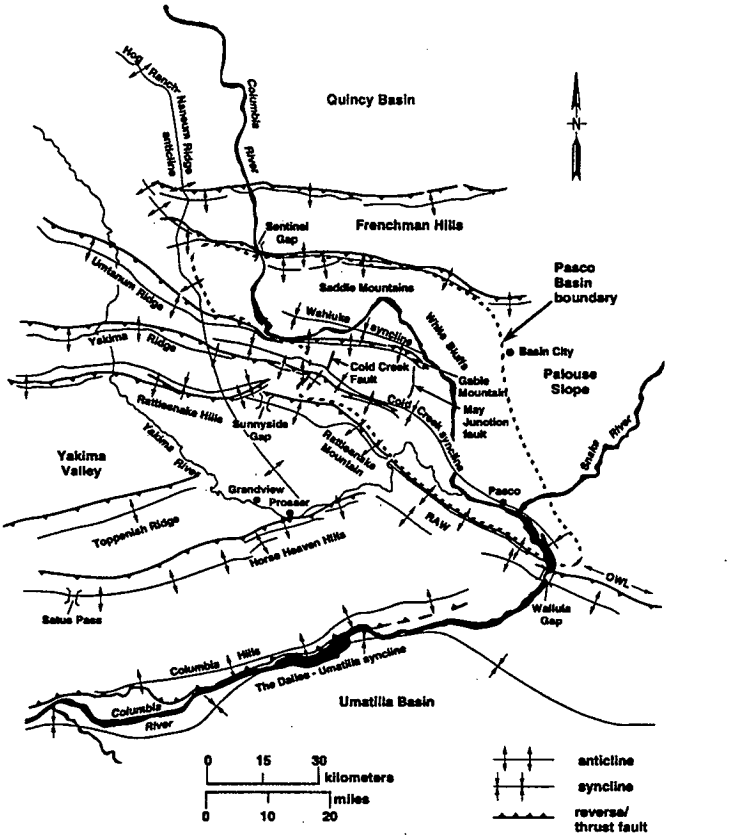

DOE-RW-0164, 1988, *Site Characterization Plan Reference Repository Location, Hanford Site, Washington*, Vol. 2, U.S. Department of Energy, Washington, D.C.

Figure C1-34. Generalized Geologic Map of the Pasco Basin.

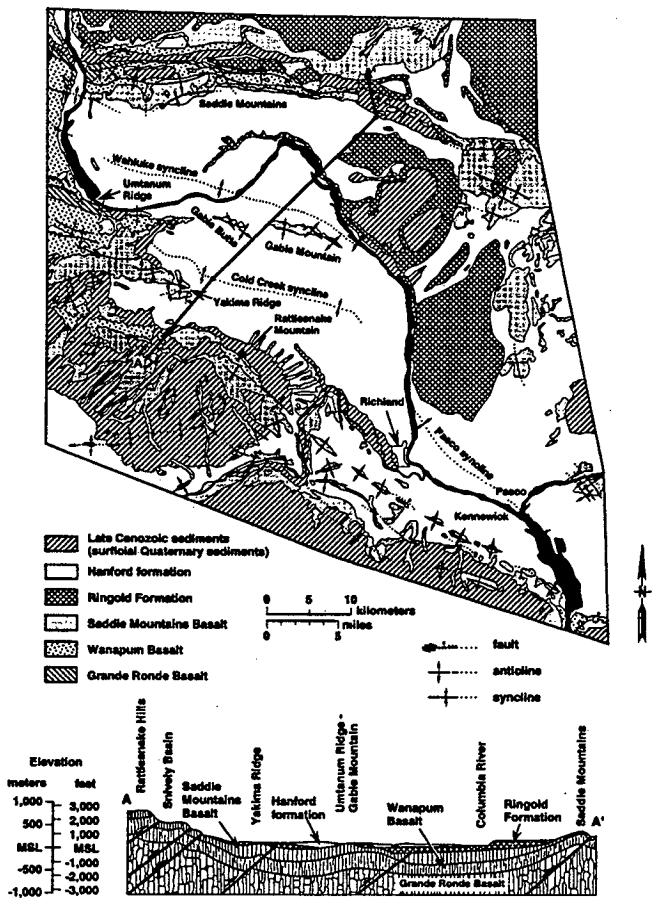

MSL = mean sea level.

RHO-BW-SA-563A, 1987, *Quaternary Geology of the Pasco Basin, Washington*, Rev. 0, Rockwell Hanford Operations, Richland, Washington.

7Q96030009.34
R3 SRP-1

Figure C1-35. Geology of the 200 East and 200 West Areas.

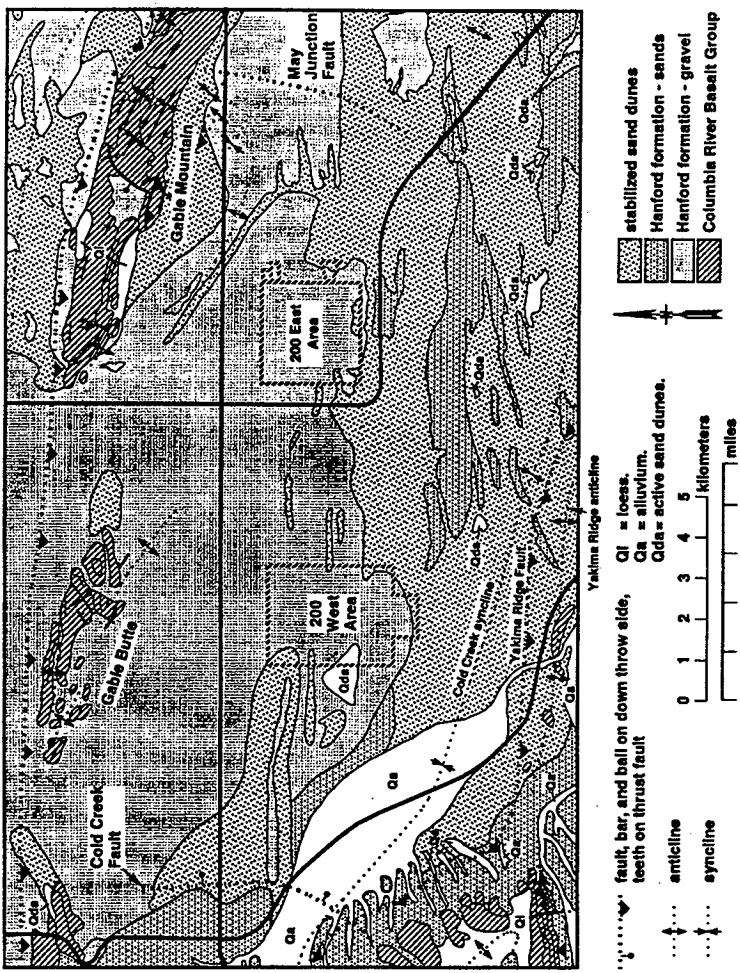

RHO-ST-23, 1979, *Geology of the Separations Areas, Hanford Site, South-Central Washington*, Rev. 0, Rockwell Hanford Operations, Richland, Washington.

Figure C1-36. Geologic Stratigraphy of the 200 East Area.

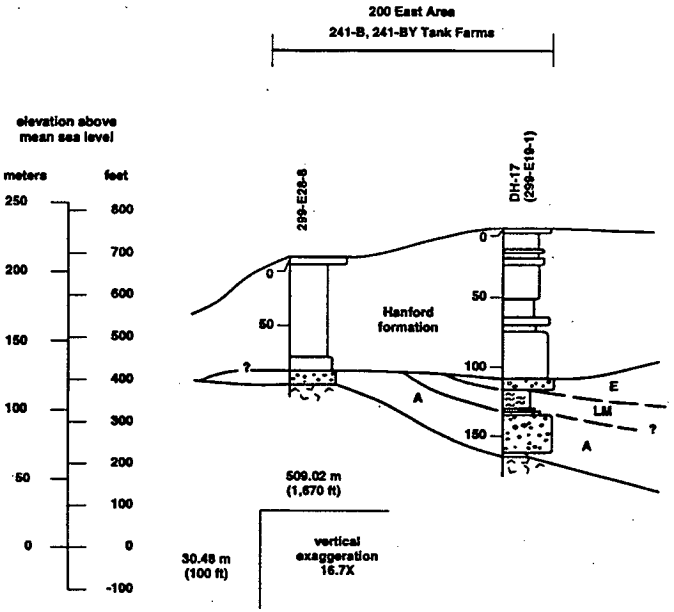

Legend

Subordinate lithologies and other lithologic symbols	Stratigraphic unit abbreviations
pebbles	A = unit A, Ringold Formation member of Wooded Island.
mud (silt- and clay-rich)	E = unit E, Ringold Formation member of Wooded Island.
basalt	LM = Lower Mud unit, Ringold Formation member of Wooded Island.
unit contacts, ? were inferred	

WHC-SD-EN-TI-012, 1992, *Geologic Setting of the 200 East Area - An Update*, Rev. 0, Westinghouse Hanford Company, Richland, Washington.

7G96030009.38
R3 SRP-1

Figure C1-37. Geologic Stratigraphy of the 200 East and 200 West Areas.

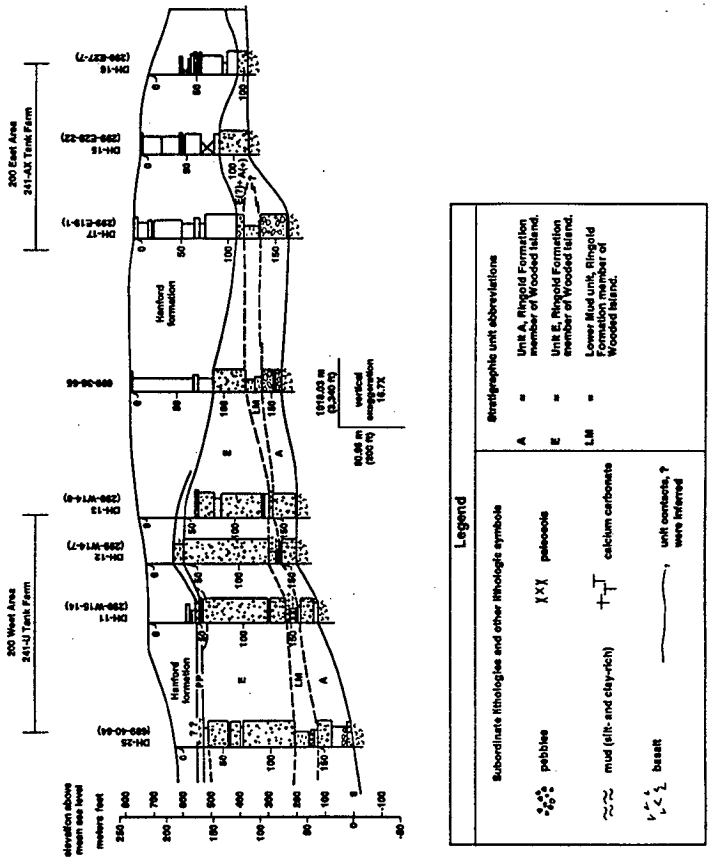

WHC-SD-EN-TI-008, 1992, *Geologic Setting of the 200 West Area - An Update*, Rev. 0, Westinghouse Hanford Company, Richland, Washington.

WHC-SD-EN-TI-012, 1992, *Geologic Setting of the 200 East Area - An Update*, Rev. 0, Westinghouse Hanford Company, Richland, Washington.

Figure C1-38. Geologic Stratigraphy of the 200 West Area.

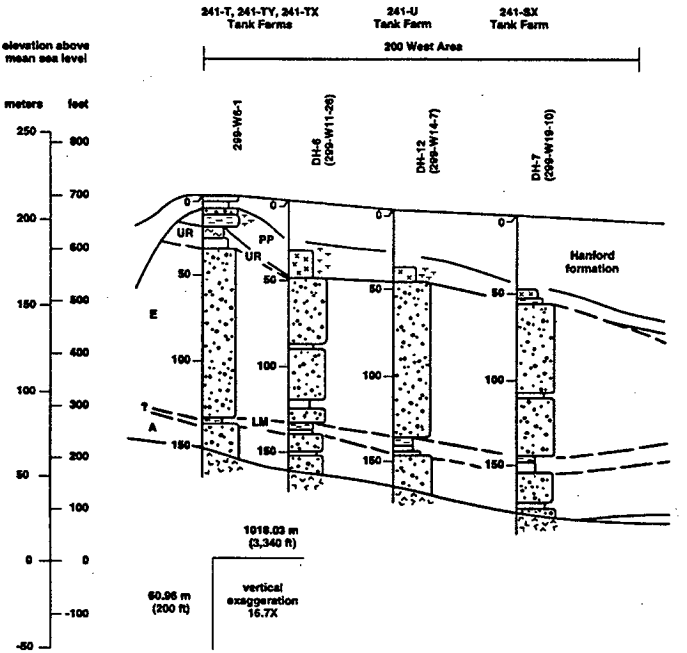

Legend

Subordinate lithologies and other lithologic symbols

- pebbles
- paleosols
- mud (silt- and clay-rich)
- calcium carbonate
- basalt
- unit contacts, ? were inferred

Stratigraphic unit abbreviations

A	=	Unit A, Ringold Formation member of Wooded Island.
E	=	Unit E, Ringold Formation member of Wooded Island.
LM	=	Lower Mud unit, Ringold Formation member of Wooded Island.
PP	=	Plio-Pleistocene
UR	=	Upper Ringold, Ringold Formation member of Taylor Flat.

WHC-SD-EN-TI-008, 1992, *Geologic Setting of the 200 West Area - An Update*, Rev. 0, Westinghouse Hanford Company, Richland, Washington.

Figure C1-39. Location of Swarm Areas in the Hanford Site Vicinity.

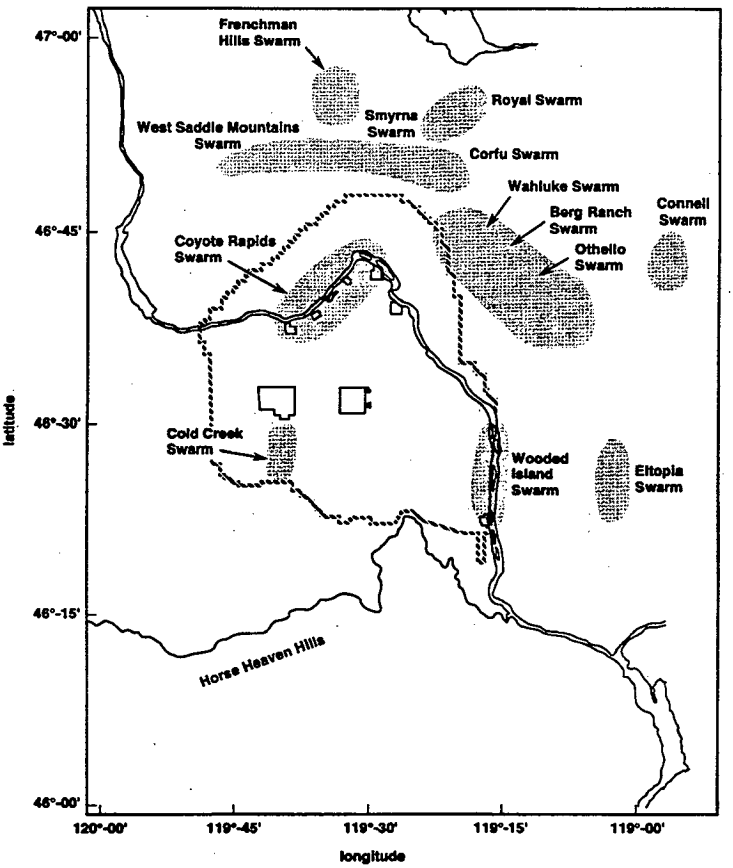

Supply System, 1981, ***Final Safety Analysis Report WPPSS Nuclear Project No. 2***, Washington Public Power Supply System, Richland, Washington.

7G96030009.40
R3 SRP-1

Figure C1-40. Patterns of Earthquake Activity at the Hanford Site 1990 through 1995.*

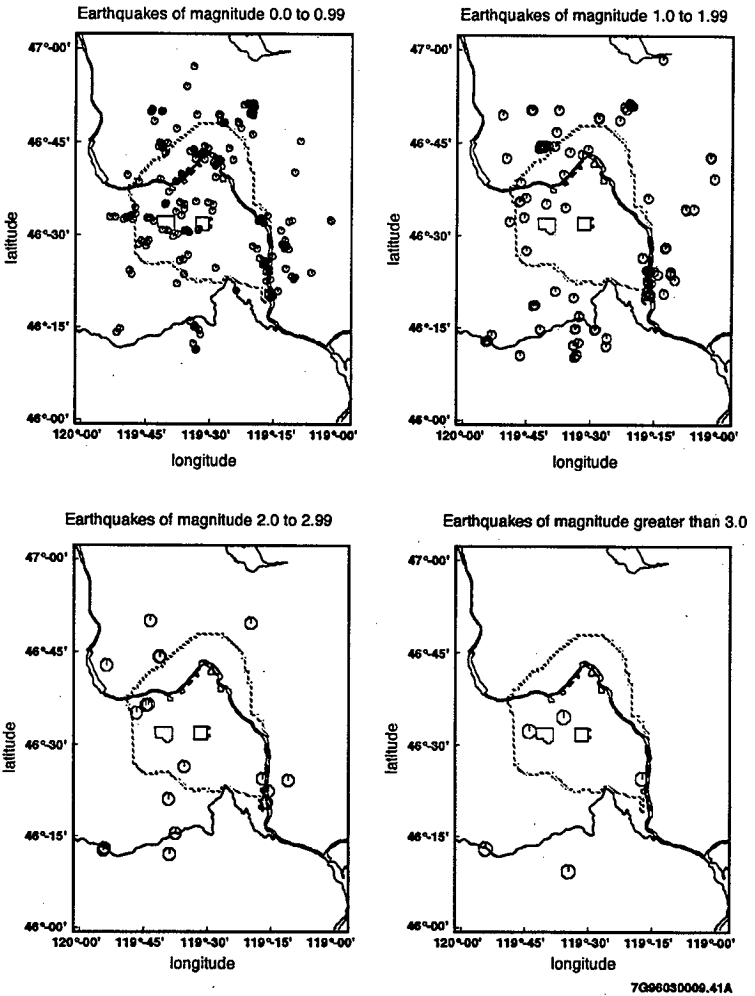

*Magnitudes are Richter Magnitude.

Figure C1-41. Patterns of Subsidence in the Cold Creek Syncline.

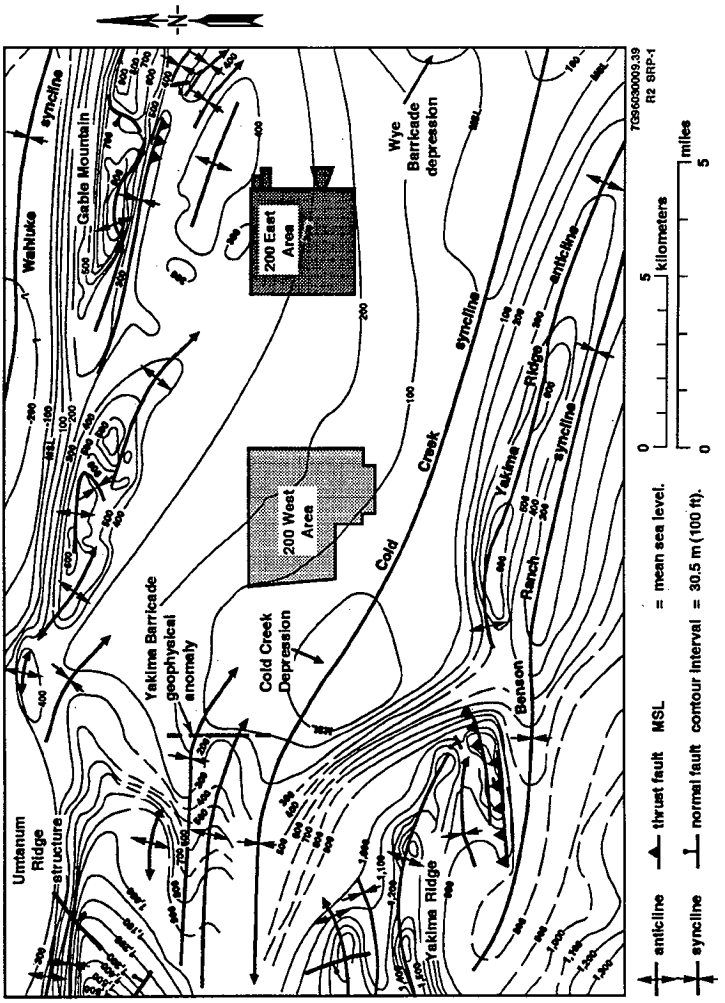

Figure C1-42. Mean Seismic Hazard Curves for the 200 East and 200 West Areas.

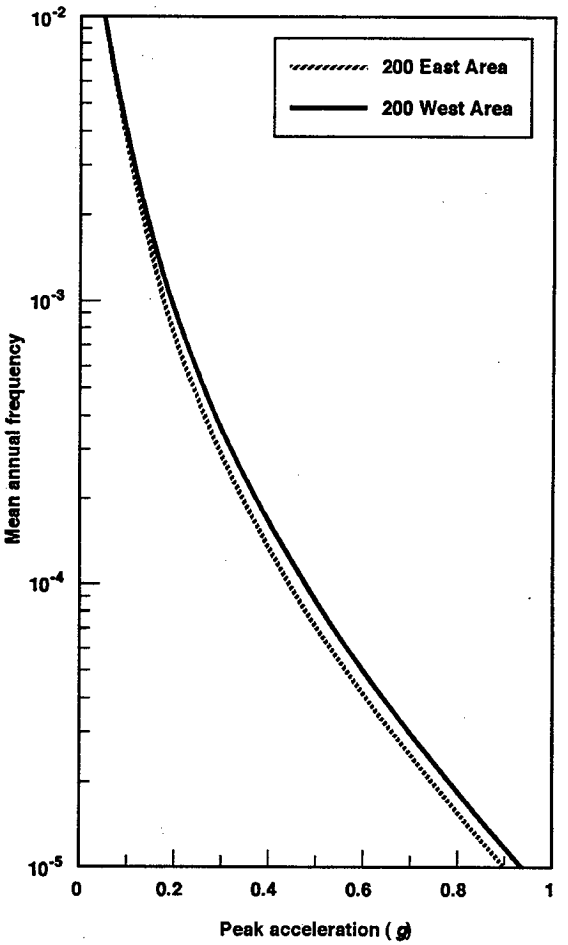

Figure C1-43. Contributions of Individual Yakima Fold Belt Folds to the Mean Seismic Hazard.

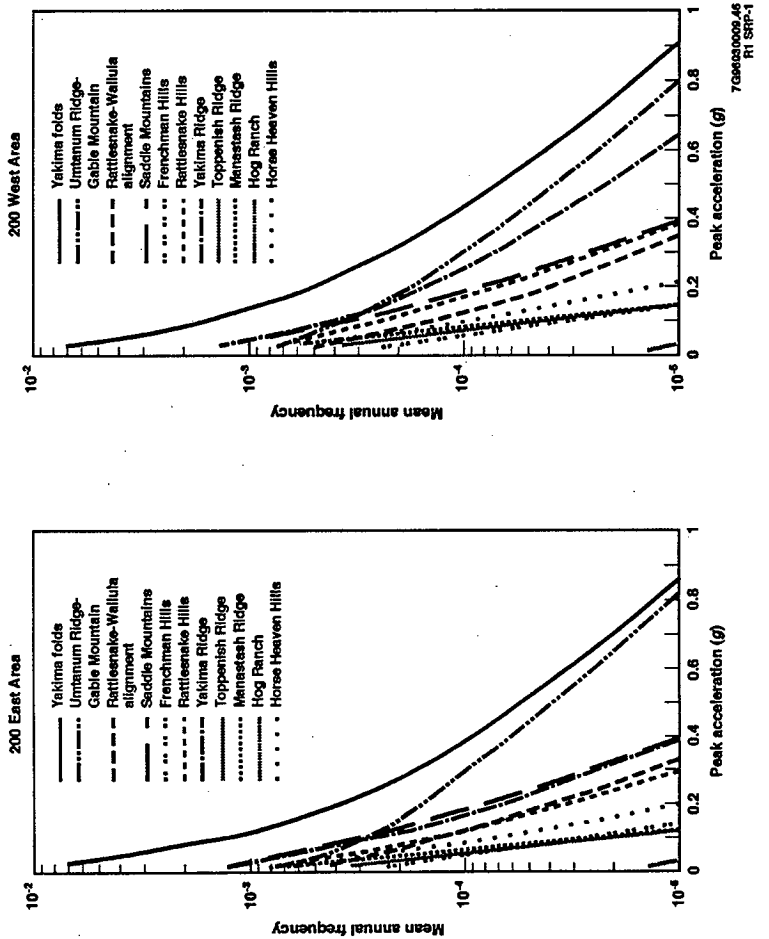

Figure C1-44. 200 West Area Performance Category 3 Response Spectra at 5% Damping.

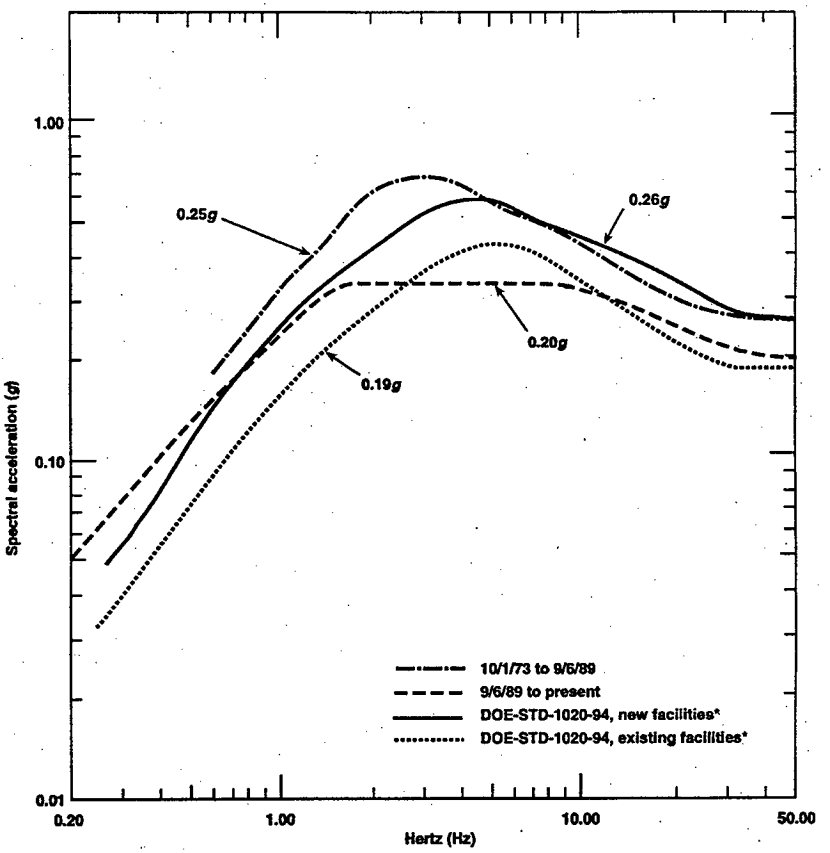

DOE-STD-1020-94, 1994, *Natural Phenomena Hazards Design and Evaluation Criteria for Department of Energy Facilities*, Change 1, U.S. Department of Energy, Washington, D.C.

*200 West Area response spectrum, shown, bounds 200 East Area response spectrum.

7G96030009.55
R3 SRP-1

Figure C1-45. Cascade Range Volcanic Ash Hazard Curve.

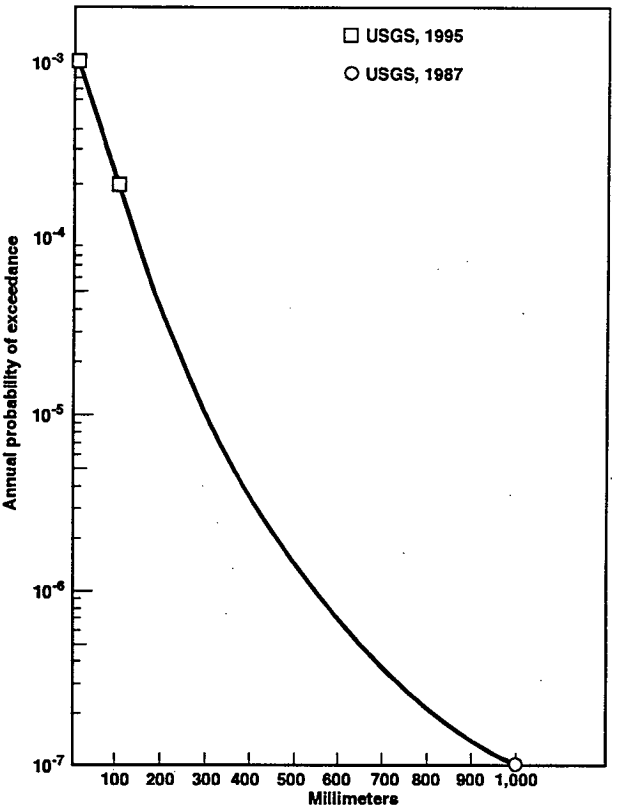

Note: To convert millimeters to inches, multiply by 0.04.

USGS, 1987, *Volcanic Hazards with Regards to Siting Nuclear-Power Plants in the Pacific Northwest,* Open-File Report 87-297, U.S. Geological Survey, Cascades Volcano Observatory, Vancouver, Wahington.

USGS, 1995, *Volcanic Hazards in the Mount Adams Region, Washington,* Open-File Report 95-492, U.S. Geological Survey, Washington, D. C.

7G96030009.44
R3 SRP-1

Figure C1-46. Range of a Rocket Launched from the Yakima Firing Center Multiple Launch Rocket System with Respect to the Hanford Site.

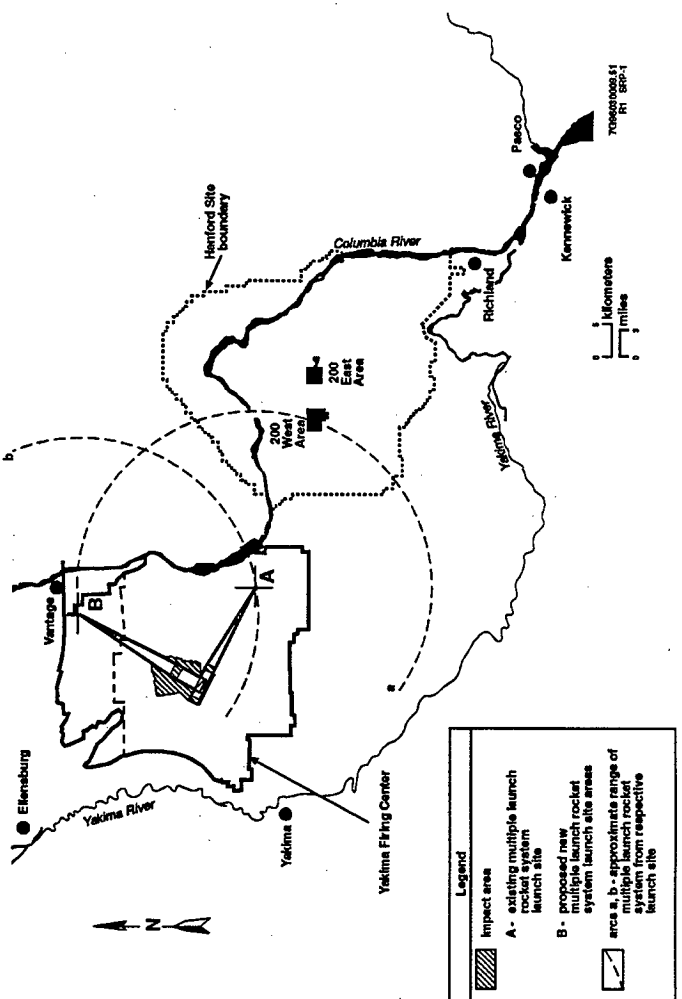

Table C1-1. Population in the Kennewick-Pasco-Richland Metropolitan Statistical Area, 1980-1995.

Year	Metropolitan statistical area	Year	Metropolitan statistical area
1980	144,469	1988	139,600
1981	150,100	1989	138,300
1982	147,900	1990	150,030*
1983	144,700	1991	153,400
1984	144,000	1992	157,700
1985	140,900	1993	163,900
1986	139,300	1994	169,900
1987	139,600	1995	175,000

Source: DOE/EIS-0189, 1996, Final Environmental Impact Statement for the Tank Waste Remediation System, Hanford Site, U.S. Department of Energy, Washington, D.C.
*Populations of Benton and Franklin counties were 112,560 and 37,473, respectively.

Table C1-2. Average Temperatures for 1961-1990 and Extreme Temperatures for 1945-1994 at the Hanford Meteorological Station.

Time span	Average temperature (1961-1990)						Extreme temperature (1945-1994)			
	Daily maximum		Daily minimum		Monthly		Maximum		Minimum	
	°C	°F	°C	°F	°C	°F	°C	°F	°C	°F
January	3	38	-4	24	-1	31	22	72	-30	-22
February	8	47	-2	29	3	38	22	72	-31	-23
March	14	57	1	34	8	46	28	83	-14	6
April	19	66	4	40	12	53	34	94	-6	21
May	24	75	8	47	16	61	40	104	-2	28
June	29	84	13	55	21	70	44	111	3	37
July	33	91	16	61	24	76	44	111	4	39
August	32	90	16	60	24	75	45	113	5	41
September	27	80	11	51	19	66	41	106	-1	30
October	19	66	4	40	12	53	32	89	-11	12
November	9	49	0	32	4	40	24	75	-25	-13
December	3	38	-4	25	-1	31	21	69	-26	-14
Year	--	--	--	--	12	53	45	113	-31	-23

Source: PNNL-11107, 1996, Climatological Data Summary 1995, with Historical Data, Rev. 0, Pacific Northwest National Laboratory, Richland, Washington.

Table C1-3. Average Number of Days that Maximum and Minimum Temperatures at the Hanford Meteorological Station were Above or Below Specified Limits (1945-1995).

Time span	Maximum temperature			Minimum temperature	
	≥38°C (≥100°F)	≥32°C (≥90°F)	≥0°C (≥32°F)	≤0°C (≤32°F)	≤-18°C (≤0°F)
	Number of days				
January	0	0	10	26	2
February	0	0	3	20	*
March	0	0	*	14	0
April	0	*	0	4	0
May	*	3	0	*	0
June	1	8	0	0	0
July	6	19	0	0	0
August	4	16	0	0	0
September	*	6	0	*	0
October	0	*	*	4	0
November	0	0	2	15	*
December	0	0	9	24	1
Year	12	51	24	106	3

Source: PNNL-11107, 1996, Climatological Data Summary 1995, With Historical Data, Rev. 0, Pacific Northwest National Laboratory, Richland, Washington.
*Denotes less than half a day.

Table C1-4. Hanford Site Average Precipitation for 1945-1995 and Extreme Precipitation for Specified Years.

Average			Maximum			Minimum		
Time span	mm	in.	Year	mm	in.	Year	mm	in.
January	24.9	0.98	1970	62.7	2.47	1977	2.00	0.08
February	15.7	0.62	1961	53.3	2.10	1988	T*	T*
March	12.7	0.50	1957	47.2	1.86	1968	0.50	0.02
April	11.7	0.46	1995	39.1	1.54	1986	T*	T*
May	13.5	0.53	1972	51.6	2.03	1992	T	T
June	13.7	0.54	1950	74.2	2.92	1986	T*	--
July	5.6	0.22	1993	44.7	1.76	1980	T*	T*
August	6.4	0.25	1977	34.5	1.36	1988	0.00*	0.00*
September	8.1	0.32	1947	34.0	1.34	1991	0.00*	0.00
October	13.7	0.54	1957	69.1	2.72	1987	T*	T*
November	21.8	0.86	1973	67.1	2.64	1976	T	T
December	24.9	0.98	1964	59.4	2.34	1976	2.8	0.11
Year	170.9	6.73	1995	312.7	12.31	1976	75.9	2.99

Source: PNNL-11107, 1996, Climatological Data Summary 1995, with Historical Data, Rev. 0, Pacific Northwest National Laboratory, Richland, Washington.
*Most recent of multiple occurrences.
T = trace (0.1 mm [0.005 in.] or less).

Table C1-5. Hanford Site Probable Maximum Precipitation Estimates and Average Return Estimates for Specified Precipitation Durations.

Duration	PMP 24-h general storm (10 mi^2)[a]		PMP local storm (1 mi^2)[a]		PMP local storm (10 mi^2)[a]		25-yr average return period[b]		100-yr average return period[b]		1,000-yr average return period[b]	
	mm	in.	mm	in.	mm	in.	mm	in.	mm	in.	mm	in.
15 min	--	--	102.0	4.0	81.0	3.2	--	--	--	--	--	--
20 min	--	--	--	--	--	--	11.9	0.47	15.2	0.60	20.3	0.80
30 min	--	--	152.0	6.0	122.0	4.8	--	--	--	--	--	--
45 min	--	--	183.0	7.2	147.0	5.8	--	--	--	--	--	--
1 h	41.0	1.6	203.0	8.0	163.0	6.4	15.8	0.62	20.6	0.81	28.2	1.11
6 h	119.0	4.7	234.0	9.2	188.0	7.4	30.7	1.21	40.4	1.59	55.9	2.20
24 h	203.0	8.0	--	--	--	--	39.6	1.56	50.6	1.99	68.1	2.68
48 h	244.0	9.6	--	--	--	--	--	--	--	--	--	--
72 h	264.0	10.4	--	--	--	--	--	--	--	--	--	--

[a]Hansen, E. M., D. D. Fenn, P. Corrigan, J. L. Vogel, L. C. Schreiner, and R. W. Stoch, 1994, Probable Maximum Precipitation - Pacific Northwest States, Hydrometeorological Report No. 57, National Weather Service, Silver Spring, Maryland.
[b]PNL-4622, 1983, Climatological Summary for the Hanford Area, Pacific Northwest Laboratory, Richland, Washington.
PMP = probable maximum precipitation.

Table C1-6. Monthly Average and Seasonal Maximum Recorded Snowfall at the Hanford Site (1945-1995).

Time span	Average		Seasonal maximum			24-h maximum		
	mm	in.	Year	mm	in.	Year	mm	in.
January	127.0	5.0	1950	594.0	23.4	1954	180.0	7.1
February	64.0	2.5	1989	432.0	17.0	1993	259.0	10.2
March	13.0	0.5	1951	107.0	4.2	1989	69.0	2.7
April	T	T	1982	25.0	1.0	--	*	*
May	0.0	0.0	--	0.0	0.0	--	0.0	0.0
June	0.0	0.0	--	0.0	0.0	--	0.0	0.0
July	0.0	0.0	--	0.0	0.0	--	0.0	0.0
August	0.0	0.0	--	0.0	0.0	--	0.0	0.0
September	0.0	0.0	--	0.0	0.0	--	0.0	0.0
October	3.0	0.1	1973	38.0	1.5	1973	38.0	1.5
November	38.0	1.5	1985	465.0	18.3	1985	224.0	8.8
December	135.0	5.3	1992	533.0	21.0	1985	168.0	6.6
Year	381.0	15.0	1992-1993	1,425.0	56.1	February 1993	259.0	10.2

Source: PNNL-11107, 1996, Climatological Data Summary 1995, with Historical Data, Rev. 0, Pacific Northwest National Laboratory, Richland, Washington.
*No value given for maximum 24-h snowfall.
T = trace (0.1 mm [0.005 in.] or less).

Table C1-7. Average Number of Thunderstorm Days Recorded at the Hanford Meteorological Station (1945-1995).

Time span	Thunderstorm days
January	0.0
February	≤0.1
March	0.2
April	0.8
May	1.6
June	2.4
July	2.1
August	2.1
September	0.8
October	0.2
November	0.0
December	≤0.1
Year	10.1

Source: PNNL-11107, 1996, Climatological Data Summary 1995, with Historical Data, Rev. 0, Pacific Northwest National Laboratory, Richland, Washington.

Table C1-8. Maximum Peak Gusts Recorded 15 m (50 ft) Aboveground at the Hanford Meteorological Station (1945-1995).

Time span	Peak gust speed		Direction of peak	Year measured
	km/h	mi/h		
January	129	80	SW	1970, 1972
February	105	65	SW	1971
March	113	70	SW	1956
April	118	73	SSW	1972
May	114	71	SSW	1948
June	116	72	SW	1957
July	111	69	WSW	1979
August	106	66	SW	1961
September	105	65	SSW	1953
October	101	63	SSW	1950
November	108	67	WSW	1993
December	114	71	SW	1955

Source: PNNL-11107, 1996, Climatological Data Summary 1995, with Historical Data, Rev. 0, Pacific Northwest National Laboratory, Richland, Washington.

Table C1-9. Average Number of Days of Dust or Blowing Dust Recorded at the Hanford Meteorological Station (1945-1995).

Time span	Days of dust or blowing dust
January	0.4
February	0.4
March	0.5
April	0.6
May	0.7
June	0.4
July	0.4
August	0.3
September	0.5
October	0.3
November	0.2
December	0.2
Year	4.6

Source: PNNL-11107, 1996, Climatological Data Summary 1995, with Historical Data, Rev. 0, Pacific Northwest National Laboratory, Richland, Washington.

Table C1-10. Monthly and Annual Number of Days with Fog and Dense Fog at the Hanford Site (1945-1995).

Time span	Days with fog			Days with dense fog		
	Average	Maximum	Minimum	Average	Maximum	Minimum
January	11.3	25.0	0.0	6.1	15.0	0.0
February	6.6	20.0	0.0	3.2	11.0	0.0
March	2.1	10.0	0.0	1.1	5.0	0.0
April	0.4	3.0	0.0	0.1	1.0	0.0
May	0.2	3.0	0.0	<0.1	1.0	0.0
June	0.1	2.0	0.0	<0.1	1.0	0.0
July	<0.1	1.0	0.0	0.0	0.0	0.0
August	0.1	1.0	0.0	<0.1	1.0	0.0
September	0.3	2.0	0.0	0.1	1.0	0.0
October	2.0	9.0	0.0	1.0	7.0	0.0
November	9.5	19.0	0.0	5.4	13.0	0.0
December	14.2	25.0	2.0	7.7	17.0	2.0
Year	46.8	84.0	22.0	24.5	42.0	9.0

Source: PNNL-11107, 1996, Climatological Data Summary 1995, with Historical Data, Rev. 0, Pacific Northwest National Laboratory, Richland, Washington.

Table C1-11. Average Monthly Sky Cover, Sunrise to Sunset, Recorded at the Hanford Meteorological Station (1946-1994).

Time span	Sky cover (in tenths)		
	Maximum	Minimum	Average
January	9.2	4.3	8.0
February	9.3	6.1	7.6
March	8.5	4.9	6.8
April	8.1	3.7	6.4
May	8.1	3.6	5.9
June	7.0	2.8	5.2
July	5.0	0.9	3.1
August	5.9	0.6	3.3
September	6.7	1.4	3.9
October	8.0	3.3	5.7
November	9.1	5.2	7.5
December	9.3	6.4	8.0
Year	6.6	5.1	5.9

Source: PNNL-11107, 1996, Climatological Data Summary 1995, with Historical Data, Rev. 0, Pacific Northwest National Laboratory, Richland, Washington.

Table C1-12. Average Number of Clear, Partly Cloudy, and Cloudy Days Recorded at the Hanford Meteorological Station (1954-1995).

Time span	Number of clear days	Number of partly cloudy days	Number of cloudy days
January	3	5	22
February	4	5	19
March	6	8	17
April	6	9	15
May	8	11	12
June	10	10	10
July	19	8	5
August	18	8	5
September	16	7	7
October	10	8	13
November	5	6	20
December	4	4	23
Year	110	89	166

Source: PNNL-11107, 1996, Climatological Data Summary 1995, with Historical Data, Rev. 0, Pacific Northwest National Laboratory, Richland, Washington.

Table C1-13. Occurrence of Mixing-Layer Thicknesses at the Hanford Site by Season and Time of Day.

Mixing layer		Winter percent frequency		Summer percent frequency	
m	ft	Night	Day	Night	Day
<250	<820	65.7	35.0	48.5	1.2
250-500	820-1,640	24.7	39.8	37.1	9.0
>500	>1,640	9.6	25.2	14.4	89.9

Source: PNL-6415, 1994, Hanford Site National Environmental Policy Act (NEPA) Characterization, Rev. 6, Pacific Northwest Laboratory, Richland, Washington.

Table C1-14. Percent Probabilities for Extended Periods of Surface-Based Inversions.

Time span	Inversion duration		
	12 h (%)	24 h (%)	48 h (%)
January and February	54.00	2.50	0.28
March and April	50.00	<0.10	<0.10
May and June	10.00	<0.10	<0.10
July and August	18.00	<0.10	<0.10
September and October	64.00	0.11	<0.10
November and December	50.00	1.20	0.13

Source: PNL-6415, 1994, Hanford Site National Environmental Policy Act (NEPA) Characterization, Rev. 6, Pacific Northwest Laboratory, Richland, Washington.

Table C1-15. Joint Frequency Distribution of Hourly Averaged Wind Data for the 200 East Area (January 1983 to December 1991). (2 sheets)

Wind speed class	Stability class	Percentage of time wind blows from the indicated direction															
		N	NNE	NE	ENE	E	ESE	SE	SSE	S	SSW	SW	WSW	W	WNW	NW	NNW
0.89	A	0.28	0.23	0.26	0.30	0.31	0.26	0.19	0.10	0.08	0.06	0.07	0.07	0.08	0.10	0.16	0.24
	B	0.10	0.13	0.12	0.11	0.12	0.10	0.08	0.04	0.04	0.02	0.01	0.03	0.03	0.06	0.08	0.10
	C	0.10	0.10	0.10	0.13	0.10	0.11	0.07	0.04	0.03	0.02	0.03	0.02	0.04	0.05	0.11	0.11
	D	0.68	0.62	0.69	0.64	0.59	0.58	0.50	0.34	0.21	0.21	0.24	0.22	0.33	0.50	0.64	0.62
	E	0.30	0.27	0.34	0.29	0.35	0.39	0.37	0.33	0.27	0.24	0.31	0.33	0.38	0.50	0.51	0.41
	F	0.18	0.14	0.16	0.16	0.24	0.26	0.32	0.29	0.26	0.25	0.26	0.31	0.37	0.41	0.36	0.25
	G	0.07	0.05	0.09	0.08	0.10	0.14	0.15	0.15	0.13	0.10	0.12	0.10	0.17	0.16	0.16	0.10
2.70	A	0.53	0.48	0.34	0.36	0.46	0.54	0.51	0.30	0.17	0.14	0.20	0.20	0.19	0.31	0.49	0.52
	B	0.16	0.15	0.07	0.10	0.13	0.14	0.15	0.09	0.06	0.05	0.04	0.06	0.06	0.10	0.19	0.17
	C	0.15	0.13	0.08	0.09	0.10	0.14	0.21	0.10	0.05	0.02	0.04	0.05	0.06	0.10	0.22	0.16
	D	0.64	0.52	0.46	0.37	0.52	0.63	0.85	0.53	0.27	0.20	0.29	0.34	0.53	1.14	1.22	0.80
	E	0.25	0.17	0.13	0.14	0.24	0.38	0.55	0.55	0.36	0.24	0.35	0.60	1.27	1.83	1.25	0.39
	F	0.10	0.05	0.05	0.07	0.12	0.22	0.45	0.47	0.34	0.24	0.33	0.57	1.25	1.83	0.92	0.24
	G	0.03	0.02	0.02	0.03	0.07	0.10	0.22	0.24	0.15	0.10	0.12	0.25	0.64	0.75	0.34	0.08
4.70	A	0.20	0.26	0.11	0.04	0.06	0.10	0.12	0.14	0.09	0.08	0.18	0.36	0.25	0.35	0.44	0.18
	B	0.06	0.06	0.03	0.01	0.02	0.04	0.05	0.05	0.02	0.02	0.06	0.08	0.07	0.14	0.14	0.06
	C	0.06	0.05	0.03	0.01	0.02	0.02	0.05	0.04	0.04	0.02	0.04	0.07	0.07	0.13	0.13	0.04
	D	0.23	0.21	0.10	0.04	0.09	0.12	0.29	0.28	0.18	0.14	0.27	0.44	0.63	1.50	0.93	0.22
	E	0.13	0.08	0.04	0.01	0.04	0.06	0.18	0.27	0.16	0.13	0.22	0.53	1.51	2.70	0.87	0.13
	F	0.03	0.05	0.01	0.01	0.01	0.03	0.07	0.18	0.11	0.04	0.08	0.30	0.92	1.69	0.40	0.05
	G	0.00	0.00	0.00	0.00	0.00	0.00	0.02	0.10	0.05	0.01	0.03	0.16	0.42	0.86	0.16	0.01
7.20	A	0.05	0.06	0.06	0.01	0.00	0.00	0.01	0.03	0.03	0.04	0.13	0.27	0.18	0.24	0.35	0.05
	B	0.02	0.02	0.01	0.00	0.00	0.00	0.01	0.01	0.01	0.01	0.05	0.09	0.05	0.07	0.09	0.01
	C	0.01	0.02	0.02	0.00	0.00	0.00	0.00	0.01	0.02	0.01	0.03	0.08	0.04	0.06	0.07	0.01
	D	0.07	0.08	0.03	0.01	0.00	0.01	0.03	0.08	0.07	0.12	0.29	0.43	0.42	1.13	0.56	0.06
	E	0.06	0.09	0.02	0.00	0.00	0.00	0.02	0.05	0.05	0.08	0.20	0.33	0.48	1.75	0.49	0.02
	F	0.02	0.01	0.00	0.00	0.00	0.00	0.00	0.01	0.02	0.01	0.01	0.02	0.05	0.09	0.03	0.00
	G	0.00	0.00	0.00	0.00	0.00	0.00	0.00	0.01	0.00	0.00	0.00	0.00	0.00	0.01	0.00	0.00

Table C1-15. Joint Frequency Distribution of Hourly Averaged Wind Data for the 200 East Area (January 1983 to December 1991). (2 sheets)

Wind speed class	Stability class	Percentage of time wind blows from the indicated direction															
		N	NNE	NE	ENE	E	ESE	SE	SSE	S	SSW	SW	WSW	W	WNW	NW	NNW
9.80	A	0.00	0.01	0.01	0.00	0.00	0.00	0.00	0.00	0.00	0.01	0.07	0.17	0.07	0.10	0.25	0.00
	B	0.00	0.01	0.00	0.00	0.00	0.00	0.00	0.00	0.00	0.00	0.03	0.04	0.02	0.03	0.06	0.00
	C	0.00	0.00	0.00	0.00	0.00	0.00	0.00	0.00	0.00	0.00	0.03	0.04	0.01	0.03	0.05	0.00
	D	0.00	0.02	0.01	0.01	0.00	0.00	0.00	0.00	0.01	0.07	0.19	0.23	0.09	0.47	0.33	0.01
	E	0.00	0.04	0.01	0.00	0.00	0.00	0.00	0.01	0.01	0.05	0.13	0.14	0.04	0.35	0.14	0.00
	F	0.00	0.00	0.00	0.00	0.00	0.00	0.00	0.00	0.00	0.00	0.00	0.00	0.00	0.00	0.00	0.00
	G	0.00	0.00	0.00	0.00	0.00	0.00	0.00	0.00	0.00	0.00	0.00	0.00	0.00	0.00	0.00	0.00
13.00	A	0.00	0.00	0.00	0.00	0.00	0.00	0.00	0.00	0.00	0.00	0.03	0.06	0.02	0.02	0.04	0.00
	B	0.00	0.00	0.00	0.00	0.00	0.00	0.00	0.00	0.00	0.00	0.01	0.02	0.01	0.00	0.01	0.00
	C	0.00	0.00	0.00	0.00	0.00	0.00	0.00	0.00	0.00	0.00	0.02	0.01	0.00	0.01	0.02	0.00
	D	0.01	0.02	0.00	0.00	0.00	0.00	0.00	0.00	0.00	0.02	0.10	0.09	0.02	0.06	0.08	0.00
	E	0.00	0.00	0.01	0.00	0.00	0.00	0.00	0.00	0.00	0.01	0.04	0.02	0.01	0.04	0.03	0.00
	F	0.00	0.00	0.00	0.00	0.00	0.00	0.00	0.00	0.00	0.00	0.00	0.00	0.00	0.00	0.00	0.00
	G	0.00	0.00	0.00	0.00	0.00	0.00	0.00	0.00	0.00	0.00	0.00	0.00	0.00	0.00	0.00	0.00
16.00	A	0.00	0.00	0.00	0.00	0.00	0.00	0.00	0.00	0.00	0.00	0.00	0.01	0.00	0.00	0.01	0.00
	B	0.00	0.00	0.00	0.00	0.00	0.00	0.00	0.00	0.00	0.00	0.00	0.00	0.00	0.00	0.00	0.00
	C	0.00	0.00	0.00	0.00	0.00	0.00	0.00	0.00	0.00	0.00	0.00	0.00	0.00	0.00	0.00	0.00
	D	0.00	0.00	0.00	0.00	0.00	0.00	0.00	0.00	0.00	0.00	0.03	0.03	0.01	0.00	0.00	0.00
	E	0.00	0.00	0.00	0.00	0.00	0.00	0.00	0.00	0.00	0.00	0.01	0.00	0.00	0.00	0.00	0.00
	F	0.00	0.00	0.00	0.00	0.00	0.00	0.00	0.00	0.00	0.00	0.00	0.00	0.00	0.00	0.00	0.00
	G	0.00	0.00	0.00	0.00	0.00	0.00	0.00	0.00	0.00	0.00	0.00	0.00	0.00	0.00	0.00	0.00
19.00	A	0.00	0.00	0.00	0.00	0.00	0.00	0.00	0.00	0.00	0.00	0.00	0.00	0.00	0.00	0.00	0.00
	B	0.00	0.00	0.00	0.00	0.00	0.00	0.00	0.00	0.00	0.00	0.00	0.00	0.00	0.00	0.00	0.00
	C	0.00	0.00	0.00	0.00	0.00	0.00	0.00	0.00	0.00	0.00	0.00	0.00	0.00	0.00	0.00	0.00
	D	0.00	0.00	0.00	0.00	0.00	0.00	0.00	0.00	0.00	0.00	0.00	0.00	0.00	0.00	0.00	0.00
	E	0.00	0.00	0.00	0.00	0.00	0.00	0.00	0.00	0.00	0.00	0.00	0.00	0.00	0.00	0.00	0.00
	F	0.00	0.00	0.00	0.00	0.00	0.00	0.00	0.00	0.00	0.00	0.00	0.00	0.00	0.00	0.00	0.00
	G	0.00	0.00	0.00	0.00	0.00	0.00	0.00	0.00	0.00	0.00	0.00	0.00	0.00	0.00	0.00	0.00

Table C1-16. Joint Frequency Distribution of Hourly Averaged Wind Data for the 200 West Area (January 1983 to December 1991). (2 sheets)

Wind speed class	Stability class	Percentage of time wind blows from the indicated direction															
		N	NNE	NE	ENE	E	ESE	SE	SSE	S	SSW	SW	WSW	W	WNW	NW	NNW
0.89	A	0.31	0.29	0.27	0.29	0.27	0.28	0.29	0.22	0.16	0.13	0.13	0.12	0.08	0.11	0.16	0.21
	B	0.14	0.12	0.10	0.10	0.15	0.11	0.10	0.08	0.05	0.05	0.05	0.04	0.06	0.06	0.09	0.10
	C	0.13	0.12	0.11	0.10	0.11	0.12	0.10	0.08	0.04	0.06	0.06	0.05	0.06	0.06	0.08	0.12
	D	0.74	0.59	0.52	0.42	0.45	0.51	0.68	0.59	0.52	0.50	0.64	0.59	0.61	0.69	0.71	0.70
	E	0.41	0.25	0.20	0.17	0.26	0.29	0.49	0.48	0.50	0.58	0.70	0.88	1.10	1.17	0.90	0.56
	F	0.31	0.20	0.16	0.16	0.17	0.23	0.41	0.43	0.44	0.46	0.61	0.91	1.28	1.45	0.98	0.53
	G	0.17	0.12	0.08	0.10	0.10	0.13	0.17	0.17	0.19	0.20	0.28	0.39	0.71	0.90	0.52	0.27
2.70	A	0.65	0.32	0.21	0.15	0.20	0.26	0.32	0.20	0.19	0.20	0.27	0.35	0.22	0.18	0.53	0.73
	B	0.26	0.13	0.08	0.05	0.05	0.11	0.11	0.07	0.04	0.04	0.08	0.08	0.07	0.09	0.18	0.29
	C	0.27	0.12	0.10	0.05	0.07	0.12	0.13	0.07	0.05	0.05	0.06	0.06	0.05	0.07	0.17	0.30
	D	0.94	0.54	0.32	0.24	0.31	0.43	0.57	0.33	0.20	0.23	0.35	0.45	0.78	1.15	1.33	1.11
	E	0.38	0.18	0.12	0.08	0.09	0.24	0.30	0.19	0.13	0.17	0.34	0.79	1.91	2.52	1.34	0.52
	F	0.19	0.10	0.03	0.02	0.03	0.08	0.17	0.10	0.06	0.06	0.11	0.34	1.00	2.03	1.02	0.30
	G	0.07	0.04	0.02	0.01	0.01	0.03	0.05	0.03	0.01	0.02	0.04	0.08	0.32	0.90	0.33	0.08
4.70	A	0.20	0.18	0.06	0.01	0.02	0.04	0.08	0.03	0.03	0.09	0.23	0.40	0.28	0.17	0.52	0.42
	B	0.07	0.04	0.02	0.01	0.01	0.03	0.03	0.01	0.01	0.03	0.06	0.11	0.07	0.05	0.18	0.14
	C	0.05	0.04	0.01	0.00	0.01	0.01	0.02	0.01	0.02	0.05	0.06	0.10	0.09	0.05	0.17	0.15
	D	0.20	0.15	0.05	0.02	0.04	0.10	0.13	0.07	0.08	0.23	0.38	0.61	0.74	0.85	1.08	0.54
	E	0.11	0.07	0.03	0.00	0.01	0.04	0.08	0.05	0.07	0.14	0.26	0.48	1.13	1.42	1.04	0.31
	F	0.03	0.01	0.00	0.00	0.00	0.01	0.01	0.02	0.02	0.03	0.03	0.06	0.23	0.24	0.19	0.13
	G	0.01	0.00	0.00	0.00	0.00	0.00	0.01	0.01	0.00	0.00	0.00	0.01	0.03	0.05	0.03	0.02
7.20	A	0.03	0.06	0.03	0.00	0.00	0.00	0.00	0.00	0.01	0.05	0.15	0.37	0.19	0.10	0.44	0.13
	B	0.01	0.01	0.01	0.00	0.00	0.00	0.00	0.00	0.00	0.02	0.05	0.11	0.06	0.03	0.13	0.03
	C	0.01	0.02	0.01	0.00	0.00	0.00	0.00	0.00	0.01	0.02	0.04	0.11	0.04	0.02	0.10	0.03
	D	0.04	0.05	0.02	0.00	0.00	0.00	0.01	0.02	0.04	0.14	0.42	0.49	0.25	0.27	0.83	0.13
	E	0.02	0.09	0.02	0.00	0.00	0.00	0.01	0.00	0.03	0.08	0.23	0.27	0.18	0.31	0.59	0.06
	F	0.00	0.00	0.00	0.00	0.00	0.00	0.00	0.00	0.00	0.00	0.00	0.01	0.02	0.01	0.01	0.00
	G	0.00	0.00	0.00	0.00	0.00	0.00	0.00	0.00	0.00	0.00	0.00	0.00	0.00	0.00	0.00	0.00

Table C1-16. Joint Frequency Distribution of Hourly Averaged Wind Data for the 200 West Area (January 1983 to December 1991). (2 sheets)

Wind speed class	Stability class	Percentage of time wind blows from the indicated direction															
		N	NNE	NE	ENE	E	ESE	SE	SSE	S	SSW	SW	WSW	W	WNW	NW	NNW
9.80	A	0.00	0.01	0.00	0.00	0.00	0.00	0.00	0.00	0.00	0.01	0.08	0.11	0.07	0.02	0.21	0.03
	B	0.00	0.00	0.00	0.00	0.00	0.00	0.00	0.00	0.00	0.01	0.03	0.04	0.02	0.01	0.05	0.01
	C	0.00	0.00	0.00	0.00	0.00	0.00	0.00	0.00	0.00	0.02	0.03	0.03	0.01	0.00	0.03	0.00
	D	0.00	0.02	0.00	0.00	0.00	0.00	0.00	0.00	0.00	0.05	0.23	0.17	0.06	0.05	0.36	0.02
	E	0.00	0.01	0.01	0.00	0.00	0.00	0.00	0.00	0.00	0.03	0.10	0.07	0.02	0.04	0.17	0.01
	F	0.00	0.00	0.00	0.00	0.00	0.00	0.00	0.00	0.00	0.00	0.00	0.00	0.00	0.00	0.00	0.00
	G	0.00	0.00	0.00	0.00	0.00	0.00	0.00	0.00	0.00	0.00	0.00	0.00	0.00	0.00	0.00	0.00
13.00	A	0.00	0.00	0.00	0.00	0.00	0.00	0.00	0.00	0.00	0.00	0.02	0.03	0.00	0.00	0.02	0.00
	B	0.00	0.00	0.00	0.00	0.00	0.00	0.00	0.00	0.00	0.00	0.01	0.01	0.01	0.00	0.01	0.00
	C	0.00	0.00	0.00	0.00	0.00	0.00	0.00	0.00	0.00	0.00	0.01	0.01	0.00	0.00	0.01	0.00
	D	0.00	0.00	0.00	0.00	0.00	0.00	0.00	0.00	0.00	0.02	0.06	0.06	0.03	0.00	0.03	0.00
	E	0.00	0.00	0.00	0.00	0.00	0.00	0.00	0.00	0.00	0.00	0.02	0.02	0.00	0.00	0.01	0.00
	F	0.00	0.00	0.00	0.00	0.00	0.00	0.00	0.00	0.00	0.00	0.00	0.00	0.00	0.00	0.00	0.00
	G	0.00	0.00	0.00	0.00	0.00	0.00	0.00	0.00	0.00	0.00	0.00	0.00	0.00	0.00	0.00	0.00
16.00	A	0.00	0.00	0.00	0.00	0.00	0.00	0.00	0.00	0.00	0.00	0.00	0.00	0.00	0.00	0.00	0.00
	B	0.00	0.00	0.00	0.00	0.00	0.00	0.00	0.00	0.00	0.00	0.00	0.00	0.00	0.00	0.00	0.00
	C	0.00	0.00	0.00	0.00	0.00	0.00	0.00	0.00	0.00	0.00	0.00	0.00	0.00	0.00	0.00	0.00
	D	0.00	0.00	0.00	0.00	0.00	0.00	0.00	0.00	0.00	0.00	0.01	0.00	0.00	0.00	0.00	0.00
	E	0.00	0.00	0.00	0.00	0.00	0.00	0.00	0.00	0.00	0.00	0.00	0.00	0.00	0.00	0.00	0.00
	F	0.00	0.00	0.00	0.00	0.00	0.00	0.00	0.00	0.00	0.00	0.00	0.00	0.00	0.00	0.00	0.00
	G	0.00	0.00	0.00	0.00	0.00	0.00	0.00	0.00	0.00	0.00	0.00	0.00	0.00	0.00	0.00	0.00
19.00	A	0.00	0.00	0.00	0.00	0.00	0.00	0.00	0.00	0.00	0.00	0.00	0.00	0.00	0.00	0.00	0.00
	B	0.00	0.00	0.00	0.00	0.00	0.00	0.00	0.00	0.00	0.00	0.00	0.00	0.00	0.00	0.00	0.00
	C	0.00	0.00	0.00	0.00	0.00	0.00	0.00	0.00	0.00	0.00	0.00	0.00	0.00	0.00	0.00	0.00
	D	0.00	0.00	0.00	0.00	0.00	0.00	0.00	0.00	0.00	0.00	0.00	0.00	0.00	0.00	0.00	0.00
	E	0.00	0.00	0.00	0.00	0.00	0.00	0.00	0.00	0.00	0.00	0.00	0.00	0.00	0.00	0.00	0.00
	F	0.00	0.00	0.00	0.00	0.00	0.00	0.00	0.00	0.00	0.00	0.00	0.00	0.00	0.00	0.00	0.00
	G	0.00	0.00	0.00	0.00	0.00	0.00	0.00	0.00	0.00	0.00	0.00	0.00	0.00	0.00	0.00	0.00

Table C1-17. Percent Frequency of Occurrence of Atmospheric Stability Classes A Through G in the 200 East and 200 West Areas (1983 to 1991).

Class	Occurrence per year (%)
A (extremely unstable)	13.9
B (moderately unstable)	4.5
C (slightly unstable)	4.3
D (neutral)	27.9
E (slightly stable)	26.0
F (moderately stable)	15.7
G (extremely stable)	6.9

Note: Due to rounding, values may not total to 100%.

Table C1-18. Infiltration Rates in the 200 West Area.

Location	Infiltration rate		Comments	Reference
	m/yr	gal/d/ft^2		
216-Z-20 Crib	699 to 1,041	47 to 70	1-2 day test	Law, A. G., 1993, *Infiltration Rates at the Preferred Soil Column Disposal Site* (internal letter 81233-93-002 to K. J. Koegler, February 24), Westinghouse Hanford Company, Richland, Washington
	254	17.1	1981-1985 actual infiltration rate (may not be maximum)	
216-U-16 Crib	238 and 535	16 and 36	1-2 day test	
Powerhouse Pond	253 to 446	17 to 30	1-2 day test	
216-U-12 Crib	165	11.1	8 month actual infiltration rate	
216-S-26 Crib	62	4.2	1984 to 1988 actual infiltration rate; low rate may be caused by sediment clogging pores	
SALDS: east borehole	37	2.5	Falling head test of known calcrete layer	Swanson, L. C., 1994, *Infiltration Rate and Hydraulic Conductivity Results* (internal letter 86B20-94-001 to R. S. Pavlina, June 27), Westinghouse Hanford Company, Richland, Washington
SALDS: west borehole	744 to 2,825	50 to 90	Falling head test of known calcrete layer	
216-U-14 Ditch	15 to 622	1 to 42	Actual infiltration rate during use	WHC-EP-0698, 1994, *Groundwater Impact Assessment Report for the 216-U-14 Ditch*, Rev. 0, Westinghouse Hanford Company, Richland, Washington

SALDS = state-approved land disposal site.

Table C1-19. Hydrogeologic Environmental Setting Data for the 200 East Area Vadose Zone.

Parameter	Units	PZ1	PZ2	PZ3	SZ
Darcian velocity	m/yr	0.03	0.03	0.03	--
Thickness	m	10.00	50.00	19.00	9.10
Bulk density	g/cm^3	1.76	1.60	1.76	1.64
Total porosity	percent	36.00	42.00	36.00	18.00
Field capacity	percent	19.00	8.50	19.00	--
Conductivity	m/day	1.32	4.32	1.32	--
Longitudinal dispersion	m	0.10	0.50	0.19	50.00
Transverse dispersion	m	--	--	--	10.00
Vertical dispersion	m	--	--	--	0.06
Effective porosity	percent	--	--	--	10.00
Velocity	m/day	--	--	--	3.29
Textural class	--	sand	sand	sand	loamy sand
Percent sand	percent	90.00	95.00	90.00	86.00
Percent silt	percent	9.00	3.00	9.00	12.00
Percent clay	percent	1.00	2.00	1.00	2.00
Percent OMC	percent	0.00	0.00	0.00	0.00
Percent Fe	percent	1.90	1.90	1.90	0.00
pH	--	8.50	8.50	8.50	7.70

NOTE: To convert meters to feet, multiply by 3.281; to convert grams to ounces, multiply by .035; to convert centimeters to inches, multiply by .394.

Source: PNL-10550, 1995, Environmental Settings for Selected U.S. Department of Energy Installations - Support Information for the Programmatic Environmental Impact Statement and the Baseline Environmental Management Report, Pacific Northwest Laboratory, Richland, Washington.

OMC = nominal percentage of organic matter present in the soil or sediment.
PZ = partially-saturated zone.
SOILC = the soil type exponent used to estimate water retention in an unsaturated soil.
SZ = saturated zone.

Table C1-20. Hydrogeologic Environmental Setting Data for the 200 West Area Vadose Zone.

Parameter	Units	PZ1	PZ2	PZ3	PZ4	PZ5	SZ
Darcian velocity	m/yr	0.03	0.03	0.03	0.03	0.03	--
Thickness	m	25.00	15.00	4.60	6.10	21.30	9.10
Bulk density	g/cm^3	1.75	1.65	1.65	1.90	1.76	1.76
Total porosity	percent	36.00	40.00	40.00	31.00	36.00	36.00
Field capacity	percent	11.00	13.00	18.00	7.20	12.00	--
Conductivity	m/day	10.40	1.97	58.60	1.73	1.81	--
Longitudinal dispersion	m	0.25	0.15	0.05	0.06	0.21	50.00
Transverse dispersion	m	--	--	--	--	--	10.00
Vertical dispersion	m	--	--	--	--	--	0.06
Effective porosity	percent	--	--	--	--	--	11.00
Velocity	m/day	--	--	--	--	--	0.18
Textural class	--	sand	loam	loamy sand	sandy loam	loamy sand	loamy sand
Percent sand	percent	95.00	44.70	85.80	73.00	87.00	87.00
Percent silt	percent	3.00	55.30	12.00	25.00	11.00	11.00
Percent clay	percent	2.00	0.00	2.20	2.00	2.00	2.00
Percent OMC	percent	0.00	0.00	0.00	0.00	0.00	0.00
Percent Fe	percent	0.00	0.00	1.12	0.00	0.00	0.00
pH	--	8.50	7.00	7.00	7.00	7.00	7.90

NOTE: To convert meters to feet, multiply by 3.281; to convert grams to ounces, multiply by .035; to convert centimeters to inches, multiply by .394.

Source: PNL-10550, 1995, Environmental Settings for Selected U.S. Department of Energy Installations - Support Information for the Programmatic Environmental Impact Statement and the Baseline Environmental Management Report, Pacific Northwest Laboratory, Richland, Washington.

OMC = nominal percentage of organic matter present in the soil or sediment.
PZ = partially-saturated zone.
SOILC = the soil type exponent used to estimate water retention in an unsaturated soil.
SZ = saturated zone.

Table C1-21. Hydraulic Conductivity of Suprabasalt Aquifer System Units Under the 200 East and 200 West Areas.

Interval	Hydraulic conductivity		Transmissivity		Data source
	m/day	ft/day	m^2/day	ft^2/day	
Both 200 East and 200 West Areas					
Elephant Mountain Member interflow zone	--	--	0.70 to 569.00	2.30 to 1,866.80	RHO-ST-42, 1981, *Hydrology of the Separations Area*, Rev. 0, Rockwell Hanford Operations, Richland, Washington
Rattlesnake Ridge interbed	--	--	0.74 to 108.00	2.43 to 354.33	RHO-RE-ST-12P, 1984, *An Assessment of Aquifer Intercommunication with B Pond-Gable Mountain Pond Area of the Hanford Site*, Rev. 0, Rockwell Hanford Operations, Richland, Washington
200 East Area					
Top of unconfined aquifer (Hanford and Ringold)	8.00 to 7,600.00	26.25 to 24,934.38	--	--	WHC-SD-EN-TI-019, 1992, *Hydrogeologic Model for the 200 East Groundwater Aggregate Area*, Rev. 0, Westinghouse Hanford Company, Richland, Washington
200 West Area					
Ringold unconfined aquifer	0.20 to 61.00	0.66 to 200.13	--	--	PNL-6820, 1989, *Hydrogeology of the 200 Areas Low Level Burial Grounds*, Rev. 0, Pacific Northwest Laboratory, Richland, Washington
	0.09 to 475.00	0.30 to 1,558.40	--	--	WHC-SD-EN-TI-019, 1992, *Hydrogeologic Model for the 200 East Groundwater Aggregate Area*, Rev. 0, Westinghouse Hanford Company, Richland, Washington
Ringold Lower Mud	1.60×10^{-5}	5.24×10^{-5}	--	--	PNL-6820, 1989, *Hydrogeology of the 200 Areas Low Level Burial Grounds*, Rev. 0, Pacific Northwest Laboratory, Richland, Washington

Table C1-22. Three Crustal Layers Related to Earthquakes at the Hanford Site.

Layer	Depth	
	km	mi
Columbia River Basalt Group	0-5	0-3
Prebasalt sediments	8.5	5
Crystalline basement	>8.5	>5

Table C1-23. Five General Sources of Earthquakes at the Hanford Site.

Area	Layer
Major reverse faults on ridges	Mainly basalt, also prebasalt sediments
Secondary faults on ridges	Basalt
Swarm area	Basalt
Basement	Crystalline basement
Cascadia Subduction Zone	Lithosphere-plate tectonic boundary

Table C1-24. Seismic Hazard Exceedance Probabilities and Peak Horizontal Surface Ground Accelerations for Each Performance Category.

Performance Category	Exceedance probability	Return period (yr)	Horizontal ground surface acceleration	
			200 West Area (*g*)	200 East Area (*g*)
1	2.0 E-03	500	0.13	0.13
2	1.0 E-03	1,000	0.19	0.18
3	5.0 E-04	2,000	0.26	0.24
4	1.0 E-04	10,000	0.48	0.44

Table C1-25. Safety-Class Hanford Site Response Spectra—10/01/73 to 09/06/89 (Fast Flux Test Facility Design Basis).

Frequency (hertz)	Damping				
	0.5%	1%	2%	5%	7%
0.500	0.280	0.248	0.210	0.147	0.115
0.700	0.415	0.358	0.306	0.212	0.167
1.000	0.607	0.522	0.457	0.308	0.245
1.5	0.900	0.785	0.680	0.450	0.350
2.000	1.150	1.000	0.860	0.552	0.410
2.500	1.300	1.120	0.980	0.600	0.440
3.000	1.400	1.200	1.040	0.616	0.455
4	1.430	1.210	1.050	0.610	0.455
5	1.390	1.150	1.000	0.580	0.430
6.500	1.230	1.030	0.870	0.520	0.400
8	1.020	0.870	0.720	0.473	0.376
10.000	0.810	0.710	0.606	0.425	0.355
15.000	0.540	0.500	0.445	0.355	0.315
20.000	0.405	0.385	0.360	0.310	0.290
33	0.250	0.250	0.250	0.250	0.250
100.000	0.250	0.250	0.250	0.250	0.250

Note: Vertical response spectra are two-thirds the horizontal response spectra.

Table C1-26. Safety-Class Hanford Site Response Spectra—9/06/89 to 03/31/96.

Control point	Frequency (hertz)	Damping				
		2%	5%	7%	10%	12%
E	0.10	0.0120	0.0102	0.0095	0.0088	0.0083
	0.16	0.0310	0.0260	0.0240	0.0230	0.0210
D	0.26	0.0840	0.0650	0.0590	0.0520	0.0480
	0.40	0.1290	0.1040	0.0950	0.0870	0.0800
	0.60	0.1920	0.1550	0.1420	0.1300	0.1200
	1.10	0.3510	0.2830	0.2610	0.2370	0.2200
C	1.73	0.5500	0.4200	0.3800	0.3300	0.3000
B	8.00	0.5500	0.4200	0.3800	0.3300	0.3000
	12.00	0.4120	0.3400	0.3160	0.2860	0.2670
	20.00	0.2860	0.2600	0.2510	0.2390	0.2310
A	33.00	0.2000	0.2000	0.2000	0.2000	0.2000
A'	100.00	0.2000	0.2000	0.2000	0.2000	0.2000

Note: Vertical response spectra are two-thirds the horizontal response spectra.

Table C1-27. Response Spectra for Existing Performance Category 3, 200 West Area.

Frequency (hertz)	Damping					
	0.5%	2%	5%	7%	10%	12%
Horizontal response spectra (*g*)						
0.25	0.06	0.04	0.04	0.03	0.03	0.03
0.50	0.17	0.12	0.10	0.09	0.08	0.08
1.00	0.33	0.25	0.19	0.18	0.15	0.13
2.00	0.54	0.40	0.30	0.27	0.24	0.22
3.30	0.70	0.51	0.39	0.35	0.30	0.28
5.00	0.74	0.54	0.41	0.37	0.32	0.30
10.00	0.55	0.42	0.33	0.30	0.27	0.25
13.30	0.43	0.34	0.28	0.26	0.24	0.23
33.30	0.19	0.19	0.19	0.19	0.19	0.19
100.00	0.19	0.19	0.19	0.19	0.19	0.19
Vertical response spectra (*g*)						
0.25	0.04	0.03	0.03	0.02	0.02	0.02
0.50	0.10	0.07	0.06	0.05	0.05	0.04
1.00	0.15	0.11	0.08	0.08	0.07	0.06
2.00	0.21	0.16	0.12	0.11	0.09	0.09
3.30	0.36	0.26	0.20	0.18	0.15	0.14
5.00	0.41	0.30	0.23	0.21	0.18	0.17
10.00	0.44	0.32	0.24	0.22	0.19	0.17
13.30	0.37	0.29	0.23	0.21	0.18	0.17
50.00	0.12	0.12	0.12	0.12	0.12	0.12
100.00	0.12	0.12	0.12	0.12	0.12	0.12

Source: HNF-PRO-097, 1997, Engineering Design and Evaluation, Rev. 0, Fluor Daniel Hanford, Inc., Richland, Washington.
WHC-SD-W236A-TI-002, 1996, Probabilistic Seismic Hazard Analysis, DOE Hanford Site, Washington, Rev. 1, Westinghouse Hanford Company, Richland, Washington.
Note: 200 West Area response spectra envelope 200 East Area.

Table C1-28. Summary of Static Soil Properties West of 200 East Area.

Material (El. in ft)	Dry density[g] (lb/ft^3)	Moist density (lb/ft^3)	Moisture content (%)	Friction angle (degree)	Elastic[a,b] modulus (E) (ton/ft^2)	Bulk[a,b] modulus (B) $\left(\frac{kips\ 1{,}000\ lb}{in^2}\right)$	Horizontal modulus of subgrade reaction (n_h)[c] (lb/in^3)	Coefficient of subgrade reaction[a,b] (K_n) (lb/in^3)	Vertical modulus of subgrade reaction[b,c] (lb/in^3)
Stratum 2 (gravel) El. 727 to 706	110	112	2	45	720	5	30^{d1}	250	30^{d1} 25^{d2} 100^{d3}
Stratum 3 (sand) Surface structures[e] El. 706 to 676 El. 676 to 250 (rock)	110	113 (design) 115 (mean) ±3 (range)	3.0	37 (design) 41 (mean) ±4 (range)	 1,440 5,760	 10 40	 40 50	 500 2,000	100^{d3}
Stratum 3 (sand) Tank structures[f] El. 663 to 613 El. 613 to 250 (rock)	110	113 (design) 115 (mean) ±3 (range)	3.0	37 (design) 41 (mean) ±4 (range)	 1,440 5,760	 10 40	 40 50	 500 2,000	100^{d4}
Backfill Depth below surface 0-20 ft 20-50 ft >50 ft	115	112	12.5[g]	38	 720 1,440 5,760	 5 10 40	 30 40 50	 250 500 2,000	25^{d2}

Note: To convert feet to meters, multiply by 0.30; to convert pounds to grams, multiply by 453.6; to convert inches to millimeters, multiply by 25.4.

[a] Moduli have been adjusted to be compatible with strain levels anticipated with structural loadings.

[b] Modulus values may be considered approximate with ± standard deviation values corresponding to ±25%.

[c] Range of data (±) based on test data from this report and review of other reports in the 200 East and 200 West Areas.

[d] Design moduli of subgrade reaction have been adjusted for anticipated foundation size and location.

- [d1] Piping within 6.1 m (20 ft) of ground surface.
- [d2] Surface structures and floor slabs.
- [d3] Exhaust stack mat.
- [d4] Tank mat foundation.

[e] Parameters apply to soils beneath surface structures.

[f] Parameters apply to soils beneath tank foundation.

[g] Moisture content anticipated during field compaction of backfill.

E = Young's modulus of elasticity.

El. = elevation.

Table C1-29. Summary of Static Soil Properties Southwest of 200 West Area.

Material (El. in ft)	Dry density[g] (lb/ft^3)	Moist density[g] (lb/ft^3)	Moisture content (%)	Friction angle (degree)	Elastic[a], modulus (E) (ton/ft^2)	Bulk[a] modulus (B) $\left(\frac{kips\ 1{,}000\ lb}{in^2}\right)$	Horizontal modulus of subgrade reaction (n_h) (lb/in^3)	Coefficient of subgrade reaction[e] (K_n) (lb/in^3)	Vertical modulus of subgrade reaction[b,c] (lb/in^3)
Stratum 2 (sand with gravel) El. 685 to 670	110	113	3	37	720	5	30	250	25[d2] 100[d3]
Stratum 3 (sand) Surface structures[f] El. 670 to 640 El. 640 to 135 (rock)	110	113 (design) 115 (mean) ±3 (range)	3.0	37 (design) 41 (mean) ±4 (range)	 1,440 5,760	 10 40	 40 50	 500 2,000	 100[d3]
Stratum 3 (sand) Tank structures[g] El. 631 to 581 El. 581 to 135 (rock)	110	113 (design) 115 (mean) ±3 (range)	3.0	37 (design) 41 (mean) ±4 (range)	 1,440 5,760	 10 40	 40 50	 500 2,000	 100[d4]
Backfill Depth below surface 0-20 ft 20-50 ft >50 ft	116	130	12.5[h]	40	 720 1,440 5,760	 5 10 40	 30 40 50	 250 500 2,000	 25[d1]

Note: To convert feet to meters, multiply by 0.30; to convert pounds to grams, multiply by 453.6; to convert inches to millimeters, multiply by 25.4.

[a]Moduli have been adjusted to be compatible with strain levels anticipated with structural loadings.

[b]Range of data (±) based on test data from this report and review of other reports in the 200 East and 200 West Areas.

[c]Modulus values may be considered approximate with ± standard deviation values corresponding to ±25%.

[d]Design moduli of subgrade reaction have been adjusted for anticipated foundation size and location.

[d1]Piping within 6.1 m (20 ft) of ground surface.

[d2]Surface structures and floor slabs.

[d3]Exhaust stack mat.

[d4]Tank mat foundation.

[e]Parameters apply to soils beneath surface structures.

[f]Parameters apply to soils beneath tank foundation.

[g]Moisture content anticipated during field compaction of backfill.

E = Young's modulus of elasticity.

El. = elevation.

Table C1-30. Summary of Dynamic Soil Properties West of 200 East Area.

Material (El. in ft)	Moist density (lb/in^3)	Friction angle (degree)	Poissons[a] ratio		Small strain[b] parameters								Large strain[c] parameters			
					V_a (ft/s)		V_p (ft/s)		G ($\frac{kips\ 1{,}000\ lb}{in^2}$)		G ($\frac{kips\ 1{,}000\ lb}{in^2}$)		G^d ($\frac{kips\ 1{,}000\ lb}{in^2}$)		E^d ($\frac{kips\ 1{,}000\ lb}{in^2}$)	
			Design	Approx. range	Design	Approx. range	Design	Approx. range	Design	Approx. range	Design	Approx. range	Design	Approx. range	Design	Approx. range
Stratum 2 (gravel) El. 727 to 706	112	45	0.27	±0.06	1,200	±250	2,150	±500	30	±15	90	±30	10	±5	30	±10
Stratum 3 (sand) El. 706 to 663	113 (design)	37 (design)	0.27	±0.06	1,500	±250	2,650	±500	50	±15	140	±30	20	±5	50	±10
El. 666 to 613	115 (mean)	41 (mean)			1,750	±200	3,100	±500	70	±10	190	±20	25	±5	65	±10
El. 613 to 477	±3 (range)	±4 (range)			2,000	±200	3,550	±500	100	±15	250	±30	35	±5	85	±10
El. 477 to 250[d,e]					2,500	±200	3,700	±500	150	±15	390	±30	55	±5	135	±10
Bedrock[e]	140	45	0.27	--	4,000[f]	--	7,400[f]	--	480	--	1,230	--	--	--	--	--
Backfill[a]	130	38	0.30	--	1,000	--	1,900	--	30	--	70	--	10	--	25	--

Note: To convert feet to meters, multiply by 0.30; to convert pounds to grams, multiply by 453.6; to convert inches to millimeters, multiply by 25.4.

[a] Computed from large strain geophysical crosshole test.

[b] Small strain parameters at 10^{-6} shear strain.

[c] Large strain parameters at 10^{-1}% shear strain.

[d] Groundwater elevation approximately 121.9 m (400 ft).

[e] Estimated soil properties include native soils and rock below a depth of 42.7 m (140 ft) (maximum depth of site borings) and backfill.

[f] Shear and compressional wave relocation estimated from measurements in Shannon and Wilson, 1993, Geologic Studies of the Columbia River Basalt Structures and Age of Deformation, The Dalles-Umatilla Region, Boardman Nuclear Project, Shannon and Wilson, Inc., Seattle, Washington. Shear wave velocities in the basalt ranged from 3,000 to 10,000 ft/s, while compressional wave velocities ranged from 5,700 to 79,000 ft/s.

E = young's modulus of elasticity.

El. = elevation.

G = shear modulus.

V_a = shear wave velocity.

V_p = compressional wave velocity.

Table C1-31. Summary of Dynamic Soil Properties Southwest of 200 West Area.

Material (El. in ft)	Moist density (lb/in^3)	Friction angle (degree)	Poissons[a] ratio	Low-strain[b] parameters				High-strain[c] parameters	
				V_s (ft/s)	V_p (ft/s)	G ($\frac{kips\ 1{,}000\ lb}{in^2}$)	E ($\frac{kips\ 1{,}000\ lb}{in^2}$)	G^a ($\frac{kips\ 1{,}000\ lb}{in^2}$)	E^a ($\frac{kips\ 1{,}000\ lb}{in^2}$)
Stratum 2 (sand with gravel) El. 685 to 670	113	37	0.27 ± 0.06	1,300 ± 300	2,300 ± 500	40 ± 15	100 ± 40	15 ± 5	40 ± 15
Stratum 3 (sand)									
El. 670 to 640	113 (design)	37 (design)	0.27 ±	1,600 ± 300	2,900 ± 500	60 ± 20	160 ± 50	20 ± 10	55 ± 20
El. 640 to 590	115 (mean)	41 (mean)	0.06	1,800 ± 250	3,300 ± 500	80 ± 20	200 ± 50	30 ± 10	70 ± 20
El. 590 to 500	±3 (range)	±4 (range)		2,000 ± 200	3,600 ± 500	100 ± 20	250 ± 50	35 ± 10	90 ± 20
El. 550 to 440[d,e]				2,250 ± 200	4,000 ± 500	120 ± 20	310 ± 50	45 ± 10	115 ± 20
El. 440 to 135[d,e]				2,500 ± 200	4,500 ± 500	150 ± 20	390 ± 50		
Bedrock[e]	140	45	0.27	4,000[f]	7,400[f]	480	1,220	--	--
Backfill[e]	130	38	0.30	1,000	1,900	30	70	15	35

Note: To convert feet to meters, multiply by 0.30; to convert pounds to grams, multiply by 453.6; to convert inches to millimeters, multiply by 25.4.

[a] Computed from large-strain geophysical crosshole test.

[b] Low-strain parameters at 10^{-4}% shear strain.

[c] High-strain parameters at 10^{-1}% shear strain.

[d] Groundwater elevation approximately 76.2 m (250 ft).

[e] Estimated soil properties include native soils below a depth of 42.7 m (140 ft) (maximum depth of site borings) and backfill.

[f] Shear and compressional wave velocities estimated from measurements in Shannon and Wilson, 1993, Geologic Studies of the Columbia River Basalt Structures and Age of Deformation, The Dalles-Umatilla Region, Boardman Nuclear Project, Shannon and Wilson, Inc., Seattle, Washington. Shear wave velocities in the basalt ranged from 3,000 to 10,000 ft/s, while compressional wave velocities ranged from 5,700 to 79,000 ft/s.

Range of values indicated on this table are approximate.

E = Young's modulus of elasticity.

El. = elevation.

G = shear modulus.

V_s = shear wave velocity.

V_p = compressional wave velocity.

Table C1-32. Natural Phenomena Design and Evaluation Criteria for New and Existing Hazard Category 2 Facilities. (2 sheets)

Natural phenomena hazard	Structural design criteria					
	Safety function	Safety designation[a]		Performance Category[b]		Bases for criteria[c]
				New facilities	Existing facilities	
Seismic	Protect offsite public	Safety-Class (radiological impacts)	Safety-Significant (toxicological impacts)	PC3 h = 0.26 g_d v = 0.18 g_d	PC3 h = 0.19 g_d v = 0.12 g_d	DOE-STD-1020-94, equal hazard spectrum
	Protect onsite worker	Safety-Significant		PC2[e] h = 0.20 g v = NA	PC2[e] h = 0.13 g v = NA	UBC essential facilities
	Protect facility worker/occupant	General use	Safety-Significant (facility worker)	PC1[e] h = 0.20 g v = NA	PC1[e] h = 0.10 g v = NA	UBC standard occupancy
Tornado		Not applicable for all designations				DOE-STD-1020-94
Wind loads	Protect offsite public	Safety-Class (radiological impacts)	Safety-Significant (toxicological impacts)	PC3 - "fastest mile" 80 mi/h, missile - 2x4 timber plank 15 lb @ 30 ft	PC3 - "fastest mile" 70 mi/h, missile - NA	DOE-STD-1020-94
	Protect onsite worker	Safety-Significant		PC2 - "fastest mile" 70 mi/h, missile - NA	PC2 - "fastest mile" 60 mi/h, missile - NA	DOE-STD-1020-94
	Protect facility worker/occupant	General use	Safety-Significant (facility worker)	PC1 - "fastest mile" 70 mi/h, missile - NA	PC1 - "fastest mile" 60 mi/h, missile - NA	DOE-STD-1020-94
Peak gusts	All	All		All - 80 mi/h	All - 80 mi/h	Maximum measured Table 1-8
Snow loads	All	All		PC3 - roof loads 20 lb/ft^2, ground loads 15 lb/ft^2	NA	DOE-STD-1020-94, ASCE-7
Ashfall loads	All	All		PC3 - 15 lb/ft^2 (ground loads)	NA	WHC-SD-GN-ER-30038
Suspended ashfall	All	All		All - 1.38 E-02 lb/ft^3	All - 1.38 E-02 lb/ft^3	WHC-SD-GN-ER-30038, Supply System 1977

Table C1-32. Natural Phenomena Design and Evaluation Criteria for New and Existing Hazard Category 2 Facilities. (2 sheets)

Natural phenomena hazard	Structural design criteria					
	Safety function	Safety designation[a]		Performance Category[b]		Bases for criteria[c]
				New facilities	Existing facilities	
Columbia River flood loads	Protect offsite public	Safety-Class (radiological impacts)	Safety-Significant (toxicological impacts)	PC3 - NA	NA	DOE-STD-1020-94, WHC-SD-GN-ER-501—all 200 East, 200 West, and 600 Area facilities are above flood level
	Protect onsite worker	Safety-Significant		PC2 - NA	NA	DOE-STD-1020-94, WHC-SD-GN-ER-501—all 200 East, 200 West, and 600 Area facilities are above flood level
	Protect facility worker/occupant	General use	Safety-Significant (facility worker)	PC1 - NA	NA	DOE-STD-1020-94, WHC-SD-GN-ER-501—all 200 East, 200 West, and 600 Area facilities are above flood level
Cold Creek flash flood	All	All		All - rainfall greater than 1 in. per rainday	All - rainfall greater than 1 in. per rainday	Section 1.4.2
Other natural phenomena						
Lightning	All	All		All—probability of lightning strike per facility 1.0 E-02 strikes/yr	All—probability of lightning strike per facility 1.0 E-02 strikes/yr	Section 1.4.1
Maximum precipitation	All	All		All—probability of greater than 1 in. rainfall 2.0 E-04/yr	All—probability of greater than 1 in. rainfall 2.0 E-04/yr	Section 1.4.1

Note: To convert feet to meters, multiply by 0.30; to convert pounds to grams, multiply by 453.6; to convert inches to millimeters, multiply by 25.4; to convert miles to kilometers, multiply by 1.61.

[a] Safety-Significant may be designed to PC3, PC2, or PC1 requirements based on receptor and hazardous material released.

[b] Criteria are derived from DOE-STD-1020-94, 1994, Natural Phenomena Hazards Design and Evaluation Criteria for Department of Energy Facilities, Change 1, U.S. Department of Energy, Washington, D.C.

[c] Bases for established design/evaluation criteria.

[d] Horizontal is 70% of vertical.

[e] Earthquake load design of PC1 structures, systems, and components shall comply with the UBC, Seismic Zone 2B, for standard occupancy facilities. Earthquake load design of PC2 structures, systems, and components shall comply with the UBC, Seismic Zone 2B, for essential facilities.

ASCE-7, 1996, Minimum Design Loads for Buildings and Other Structures, American Society of Civil Engineers, New York, New York.

Supply System, 1977, Preliminary Safety Analysis Report, WNP 1/4, Washington Public Power Supply System, Richland, Washington.

UBC, 1994, Uniform Building Code, International Conference of Building Officials, Whittier, California.

WHC-SD-GN-ER-501, 1996, Natural Phenomena Hazards, Hanford Site, South Central Washington, Rev. 0, Westinghouse Hanford Company, Richland, Washington.

WHC-SD-GN-ER-30038, 1996, Volcanic Ashfall Loads for the Hanford Site, Rev. 0, Westinghouse Hanford Company, Richland, Washington.

h = horizontal.
NA = not applicable.
PC = Performance Category.
UBC = Uniform Building Code.
v = vertical.

This document was too large to scan as a single document; therefore, it has been divided into smaller sections.

Section 4 of 10

Document Information			
Document #	SD-WM-BIO-001	Revision	1
Title	TWRS BASIS FOR INTERIM OPERATION		
Date	10/28/1998		
Originator	Y.G. NOORANI	Originator Co.	FDH
Recipient		Recipient Co.	
References	ECN-644566		
Keywords	AUTHORIZATION BASIS		
Projects	BIO,TWRS,TFARM,W-320		
Other Information	THIS SECTION CONTAINS APPENDIX D THRU TABLE D3.1-3 OF VOLUME 3		

APPENDIX D
HAZARD ANALYSIS RESULTS REPORT

This page intentionally left blank.

CONTENTS

D1.0 INTRODUCTION D-1

D2.0 HAZARD ANALYSIS METHODOLOGY D-1
D2.1 HAZARD IDENTIFICATION D-2
D2.2 HAZARD TOPOGRAPHY D-3
D2.3 HAZARD EVALUATION D-4
D2.4 CANDIDATE ACCIDENT SELECTION D-9
D2.5 CONTROLS IDENTIFICATION D-12
D2.6 HAZARD CLASSIFICATION D-13
D2.7 HAZARD ANALYSIS DATABASE D-13

D3.0 HAZARD ANALYSIS RESULTS D-15
D3.1 HAZARD TOPOGRAPHY RESULTS D-15
D3.2 SUMMARY OF OCCURRENCES D-15
D3.3 ACCIDENT SELECTION RESULTS D-16
D3.4 HAZARD EVALUATION RESULTS D-16
D3.5 CONTROL IDENTIFICATION RESULTS D-17

D4.0 REFERENCES D-17

LIST OF FIGURES

D2-1 Flow Diagram of the Hazard Analysis Process FD-1

D2.5-1 Process to Identify Controls FD-2

D2.5-2 Risk Matrix FD-3

LIST OF TABLES

D2.1-1 Hazards Identification Form TD2-1

D2.1-2 Hazard Identification Checklist and Energy Designators . . . TD2-2

D2.2-1 Tank Waste Remediation System Facility Type Codes TD2-3

D2.3-1 Representative Hazard Analysis TD2-4

D2.3-2 Likelihood Categories TD2-5

D2.3-3 Consequence Categories TD2-5

D2.4-1 Accident Release Attributes TD2-5

D2.4-2 Hazardous Condition Cause Codes TD2-6

D2.5-1 Risk Guidelines TD2-7

D2.7-1 General Material At Risk Categories TD2-7

D3.1-1 Material at Risk Table TD3.1-1-1

D3.1-2 TWRS Facility Configurations TD3.1-2-1

D3.1-3 TWRS Tank Unique Phenomena TD3.1-3-A-1

D3.1-4-A TWRS Facility Hazard Identification TD3.1-4-A-1

D3.1-4-AN TWRS Facility Hazard Identification TD3.1-4-AN-1

D3.1-4-AP TWRS Facility Hazard Identification TD3.1-4-AP-1

D3.1-4-AW TWRS Facility Hazard Identification TD3.1-4-AW-1

D3.1-4-AX TWRS Facility Hazard Identification TD3.1-4-AX-1

D3.1-4-AY TWRS Facility Hazard Identification TD3.1-4-AY-1

D3.1-4-AZ TWRS Facility Hazard Identification TD3.1-4-AZ-1

D3.1-4-B TWRS Facility Hazard Identification TD3.1-4-B-1

D3.1-4-BX TWRS Facility Hazard Identification TD3.1-4-BX-1

D3.1-4-BY TWRS Facility Hazard Identification TD3.1-4-BY-1

D3.1-4-C TWRS Facility Hazard Identification TD3.1-4-C-1

D3.1-4-S TWRS Facility Hazard Identification TD3.1-4-S-1

D3.1-4-SX TWRS Facility Hazard Identification TD3.1-4-SX-1

LIST OF TABLES (cont)

D3.1-4-SY TWRS Facility Hazard Identification TD3.1-4-SY-1

D3.1-4-T TWRS Facility Hazard Identification TD3.1-4-T-1

D3.1-4-TX TWRS Facility Hazard Identification TD3.1-4-TX-1

D3.1-4-TY TWRS Facility Hazard Identification TD3.1-4-TY-1

D3.1-4-U TWRS Facility Hazard Identification TD3.1-4-U-1

D3.1-4-MISC Miscellaneous Facilities Hazards Identification . TD3.1-4-MISC-1

D3.1-4-IMUST Inactive Miscellaneous Underground Storage Tanks or Miscellaneous Inactive Storage Facilities Hazards Identification TD3.1-4-IMUST-1

D3.2-1 Tank Farm Events, Off-Normal (ON) and Critiques TD3.2-1-1

D3.2-2 Summary of Occurrences TD3.2-2-1

D3.2-3 Hazard Analysis Cause Groups and Associated Occurrences . TD3.2-3-1

D3.2-4 Occurrences Not Included in the Hazard Analysis TD3.2-4-1

D3.3-1 Analyzed Accidents TD3.3-1-1

D3.3-2 Analyzed Accidents and the Represented Hazardous Conditions TD3.3-2-1

D3.4-1 Hazardous Conditions With Potential Significant Offsite Consequences (S3) TD3.4-1-1

D3.4-2 Hazardous Conditions With Potential Significant Onsite Consequences (S2) TD3.4-2-1

D3.4-3 Hazardous Conditions With Potential Significant Worker Consequences (S1) TD3.4-3-1

D3.4-4 Hazardous Conditions With Potential Occupational Safety Consequences (OCC) TD3.4-4-1

D3.4-5 Hazardous Conditions With Potential Radiation Exposure Consequences (RP) TD3.4-5-1

LIST OF TERMS

ALC	air lift circulator
AIChE	American Institute of Chemical Engineers
BIO	Basis for Interim Operation
CAM	continuous air monitor
CC	complexant concentrate waste
CCTV	closed-circuit television
COB	cleanout box
CPS	Criticality Prevention Specifications
DC	dilute complexed waste
DCRT	double-contained receiver tank
DOT	U.S. Department of Transportation
dP	differential pressure
DST	double-shell tank
ERPG	emergency response planning guideline
FFTF	Fast Flux Test Facility
FSAR	Final Safety Analysis Report
GRE	gas release event
HazOp	hazard and operability study
HEPA	high-efficiency particulate air (filter)
IMUST	inactive miscellaneous underground storage tank
LFL	lower flammability limit
MAR	material at risk
MPS	Master Pump Shutdown
NA	not applicable
NCAW	neutralized current acid waste
NHW	neutralized high-level waste
ORPS	Occurrence Reporting and Processing System
PE	Potentially Present elsewhere in/adjacent to facility
PEL	permissible exposure limit
PF	Potentially Present in the facility
PFP	Plutonium Finishing Plant
PHA	preliminary hazards analysis
PHMC	Project Hanford Management Contract
PNNL	Pacific Northwest National Laboratory
PT	Potentially Present in tanks
RCRA	*Resource Conservation and Recovery Act of 1976*
RMW	radioactive mixed waste
SAIC	Science Applications International Corporation
SAR	Safety Analysis Report
SARA	*Superfund Amendments and Reauthorization Act of 1986*
SSC	structure, system, and component
SST	single-shell tank
SWP	special work procedure
TOC	total organic carbon
TSR	Technical Safety Requirement
TWA	time-weighted average
TWRS	Tank Waste Remediation System
USQ	Unreviewed Safety Question
w/o	without
WRSS	Waste Retrieval Sluicing System

APPENDIX D
HAZARD ANALYSIS RESULTS REPORT

D1.0 INTRODUCTION

This Appendix describes the methodology used for the Tank Waste Remediation System (TWRS) Basis for Interim Operation (BIO) hazard analysis and documents the results. Any exception to the methodology taken in the development of the addenda are identified in each specific addendum. The hazard analysis was performed in accordance with DOE-STD-3009-94, *Preparation Guide for U.S. Department of Energy Nonreactor Nuclear Facility Safety Analysis Reports.*

The data generated by the hazard analyses were captured in a hazard analysis database and the results are presented in this Appendix and Chapter 5.0, "Safety Analysis," except for separate projects identified in the addenda.

D2.0 HAZARD ANALYSIS METHODOLOGY

This section presents the methodology used to perform the TWRS hazard analysis. A flow diagram of the hazard analysis process is illustrated in Figure D2-1, "Flow Diagram of the Hazards Analysis Process." Hazards that can contribute to the uncontrolled release of radioactive or hazardous materials are systematically and comprehensively identified through the hazard identification process (Section D2.1, "Hazard Identification"). Representative analysis cases are identified and applied to appropriate TWRS facilities by hazard topography (Section D2.2, "Hazard Topography"). The hazard evaluation process (Section D2.3, "Hazard Evaluation") identifies hazardous conditions for the representative cases and identifies causes, existing preventive and mitigative features, and qualitative estimates of the frequency and consequence. Representative analysis was necessary to reduce the cost and schedule associated with development of the TWRS hazards analysis. Analyzing representative cases is valid for two reasons:

1. The hazard evaluations are qualitative assessments which apply to any specific situation with similar characteristics.

2. The 177 tanks in TWRS share similar characteristics.

Results of the hazard evaluations are used to select candidate accidents for quantitative analysis (Section D2.4, "Candidate Accident Selection"). Results of the hazard and accident analyses are then used to identify the safety structures, systems, and components (SSCs); Technical Safety Requirements (TSRs); and other controls required to protect the public, worker, and environment (Section D2.5, "Controls Identification"). The hazard and accident analyses results also support determination of the final facility hazard classification (Section D2.6, "Hazard Classification"). The results of hazard analysis activities are recorded in a hazard analysis database, except for separate projects identified in the addenda.

D2.1 HAZARD IDENTIFICATION

The hazard analysis includes identification of the hazards associated with TWRS design, processes, and operations. Hazards are defined as material, referred to as material at risk, with a potential adverse effect on people or the environment and the energy sources that could contribute to the uncontrolled release of that material. The hazard identification methods and techniques include the following:

- Review of past TWRS safety documents
- Review of TWRS reportable event history (e.g., unusual occurrence reports)
- Review of historical records of similar operations (e.g., Savannah River Site)
- Participation by current and former TWRS Operations and Engineering personnel in the hazard analysis effort
- Use of standardized checklists of potential hazardous materials and energy sources
- Information regarding TWRS material at risk
- TWRS facilities and operations descriptions
- Existing TWRS hazard analyses.

An initial set of hazards is identified on a tank farm level and other facility level using the form and related checklist in Tables D2.1-1, "Hazards Identification Form," and D2.1-2, "Hazard Identification Checklist and Energy Designators." A field verification by means of a TWRS document review and facility walkdown supports identifying material at risk (type, form, quantity, and location) and relating the hazard identification to each tank.

This information about the material present in each TWRS facility is used to confirm or adjust the assumptions made about the material at risk used in the hazard evaluations. The accident analysis also is based on conservative assumptions about what material might be present, not the existing inventory. These assumptions about material at risk are as follows.

Chemical Inventory. The maximum hazardous chemical inventory for TWRS is developed using two sources. The first source is a listing of chemicals from the Hanford Site hazardous material inventory database (system), which is used to meet the requirements of *Superfund Amendments and Reauthorization Act (SARA) of 1986*. This database contains a list of purchased and stored chemicals within the facility. The second source of information is WHC-SD-WM-SARR-011, *Toxic Chemical Considerations for Tank Farm Releases*. This document contains the bounding limits for chemical unit liter concentrations for the tanks within the facility.

Radiological Inventory. The TWRS worst-dose radiological inventory is based on information given in WHC-SD-WM-SARR-016, *Tank Waste Compositions and Atmospheric Dispersion Coefficients for Use in Accelerated Safety Analysis Consequence Assessments* and WHC-SD-WM-SARR-037, *Development of Radiological Concentrations and Unit Liter Doses for Tank Waste Remediation System Final Safety Analysis Report Radiological Consequence Calculations.* These documents contain bounding unit liter doses for the tanks within the facility.

D2.2 HAZARD TOPOGRAPHY

The TWRS hazard topography is used to ensure comprehensive coverage of material at risk, phenomena, configurations, operations, and facilities. TWRS documents, including WHC-EP-0182, *Waste Tank Summary Report for Month Ending March 31, 1996*; WHC-SD-WM-SARR-009, *Construction, Maintenance, and Operational Activities Analysis Summaries*; and WHC-SD-WM-HIE-007, *Tank Waste Remediation System Final Safety Analysis Report Hazard Identification/Facility Configuration Verification Report* are used to help define the hazard topography.

The hazard topography is specifically used to accomplish the following.

- Identify the types of TWRS facility situations that are directly analyzed by a hazard evaluation (e.g., identify the specific representative analyses).
- Map the representative hazard evaluation results to each TWRS facility in the scope of the TWRS BIO.
- Store the results of the hazard identification effort for each TWRS facility in the scope of the TWRS BIO.

The hazard topography data are stored in the hazard topography database and include the following information:

- **Facility Identifier**—The facility identifier used by the TWRS Project.
- **Facility Type**—The TWRS facility type code (Table D2.2-1, "Tank Waste Remediation System Facility Type Codes") used to relate hazard evaluation results to each facility. For example, a double-shell tank (DST) on the flammable gas watch list would be coded with a facility type code of DS.H. All hazardous conditions involving DSTs and hydrogen gas fires or explosions also would be assigned the DS.H code. This allows all hazardous conditions involving hydrogen fires/explosions to be related to the appropriate DSTs.
- **Capacity**—The design capacity of the vessel(s) at a facility.
- **Material Inventory**—The inventory of radioactive or hazardous materials in a facility. It includes the type, form, quantity, and location of the material (the location identification is generally the same as the facility identification).

- **Energy Sources**—The identification of potential energy sources associated with a facility (Tables D2.1-1 and D2.1-2).

- **Unique Phenomena**—The unique phenomena associated with each facility. Unique phenomena include high heat, flammable gas, organics, and radiolysis.

- **Unique Configuration**—The unique major configuration items for each facility. Unique configurations include interfaces with other facilities, the existence of active or passive ventilation, DSTs, and single-shell tanks (SSTs).

- **Representative Analyses**—The hazard evaluations which contain results applicable to a facility.

D2.3 HAZARD EVALUATION

The hazard evaluation is a structured and systematic examination of the TWRS facilities and operations using standard industry (American Institute of Chemical Engineers [AIChE]) hazard evaluation techniques. It is performed by a team of cognizant TWRS Operations and Engineering personnel, safety analysts familiar with TWRS, and technical experts in specialty areas.

Hazard evaluations representative of all TWRS facilities are performed. The representative hazard evaluations are chosen using selection criteria designed to ensure comprehensive coverage of TWRS facilities and their design and operation variations. Those variations for which specific hazard evaluations were performed include the following:

- Major or unique material at risk inventory

- Major phenomenology (e.g., high heat, flammable gas, organics, radiolysis)

- Major configuration variations (e.g., interface with evaporator, active ventilation, passive ventilation, DSTs, SSTs)

- Routine TWRS operations (e.g., waste transfers, in-tank activities, waste sampling)

- Unique facilities (e.g., 204-AR Waste Unloading Facility, 2727-W Sodium Storage).

The representative hazard evaluations and the technique used for the respective analyses performed are listed in Table D2.3-1, "Representative Hazard Analysis." Hazardous conditions were developed from the information obtained from hazard evaluations performed by hazard and operability studies (HazOps), preliminary hazards analyses (PHAs), or What-If analysis. These hazard evaluation techniques use a tabular format to capture pertinent information. The sequential numbering system used in the HazOp, PHA, or What-If tables is the basis for the hazardous condition alpha-numeric identifiers.

In the case of PHAs and What-If analyses, the identifier is straightforward. An abbreviated designation for a PHA or What-If is combined with the sequential numbering of the table to create the identifier. For example, CRN-13-b would be the thirteenth item in the PHA for crane activities. The -b indicates that further development of the item resulted in more than one hazardous condition. In the case of HazOps, the identifier is based on an abbreviated designation for the HazOp combined with the node number and process parameter. In some cases, a sequential numbering system was substituted for the process parameter. For example, 102AW-01-FLOW01 would indicate that this hazardous condition originated in the first node of the HazOp on Tank 241-AW-102 for the process parameter FLOW. The 01 specifies that this is the first deviation guide word in the table for this process parameter. In the case of 114SX-05.b.2, the hazardous condition came from the HazOp on the 114-SX tank farm, fifth node, second process parameter, second guide word. In all cases, the alpha-numeric identifier for each hazardous condition permits tracing the condition to the specific item in the applicable HazOp, PHA, or What-If table.

The hazard evaluation technique which is applied depends on the nature of the TWRS facility or operation being analyzed. The following hazard evaluation techniques are used:

- **HazOp:** systems, equipment, and processes
- **PHA:** facility operations and situations that are primarily operations driven
- **"What If" analysis:** external events, natural phenomena, and potential common-cause failures.

HazOp. The HazOp was developed to identify and evaluate safety hazards in systems, equipment, and processes and to identify operability problems which, although not hazardous, could compromise the productivity goals for which the plant was designed to achieve. Although originally developed to anticipate hazards and operability problems for technology with which organizations have little experience, the HazOp is very effective with existing operations. However, completion of a HazOp is time consuming, and depending on the complexity of the failure being investigated, can require considerable resources (e.g., personnel, information, software, etc.). Use of the HazOp requires a detailed source of information concerning the design and operation of a process.

In a HazOp, an interdisciplinary team uses a creative, systematic approach to identify hazard and operability problems that could lead to undesirable consequences. Because these problems usually are caused by deviations from the process design, an experienced team leader systematically guides the team through the plant design. A fixed set of words (termed "guide words") is applied at specific points or "study nodes" in the plant design and combined with specific process parameters to identify potential deviations from the intended operation. Process parameters that may be examined include flow, temperature, pressure, viscosity, composition, phase, level, addition, reaction, maintenance, testing, instrumentation, and sampling. Guide words (and their meanings) include the following:

- "No/none"—Negation of design intent
- "More"—Quantitative increase
- "Less"—Quantitative decrease
- "As well as"—Qualitative increase
- "Part of"—Qualitative decrease
- "Reverse"—Logical opposite of intent
- "Other than"—Complete substitution.

Guidelines for Hazard Evaluation Procedures (AIChE 1992) gives a more detailed description of this technique.

PHA. The PHA technique is derived from Mil-Std 882B, *Military Standard System Safety Program Requirements* (DOD 1987). This technique is used to analyze facility operations and situations that are primarily operations driven. In a general way, a PHA focuses on the hazardous materials and major process areas of a plant. While the PHA technique normally is used in the preliminary phase of plant development for cases where experience provides little or no insight into potential safety problems, it also may be helpful when analyzing large, existing facilities or prioritizing hazards when circumstances prevent use of a more extensive technique. A PHA can be performed by one or two people who have a process safety background.

A list of hazards and generic hazardous situations are considered using the following process characteristics:

- Raw materials
- Intermediate and final products (and their reactivity)
- Plant equipment
- Facility layout
- Operating environment
- Operational activities (testing, maintenance, etc.)
- Interfaces among system components.

A PHA yields a qualitative description of the hazards related to a process design. A PHA also provides a qualitative ranking of hazardous situations that can be used to prioritize recommendations for reducing or eliminating hazards in subsequent life-cycle phases of the process.

Use of the PHA technique requires that analysts have access to available plant design criteria, equipment specifications, material specifications, and other sources of information. A detailed description of this technique is provided (AIChE 1992).

What-If Analysis. The What-If analysis is used to analyze external events, natural phenomena, and potential common-cause failures. The What-If analysis is a brainstorming approach in which a group of experienced personnel familiar with the subject process ask questions or voice concerns about possible undesired events. It is not as inherently structured as some other techniques (e.g., HazOp analysis). Instead, it requires the analyst to adapt the basic concept to the specific application.

Because the What-If analysis is so flexible, it can be performed at any stage of the process, using whatever process information and knowledge are available. For each area of the process, two or three people should be assigned to perform the analysis; however, a larger team may be preferred. It is better to use a large group for a complex process, dividing the process into smaller pieces, than to use a small group for the entire process.

The What-If analysis encourages the hazard analysis team to think of questions that begin with "what if." However, any process safety concern can be voiced even if the concern is not phrased as a question. Usually, a scribe records all questions on a chart pad, marking board, or computer. The questions are then divided into specific areas of investigation (usually related to consequences of interest), such as electrical safety, fire protection, or personnel safety. Each area is subsequently addressed by a team of knowledgeable members. The questions are formulated on the basis of experience and are applied to existing drawings and process descriptions. For an operating plant, the investigation may include interviews with plant staff not represented on the hazard analysis team.

A more detailed description of this technique is provided (AIChE 1992).

For each technique used, the hazard evaluation is summarized in the hazard analysis database and includes the following information:

- Hazardous condition
- Cause
- Consequence
- Frequency category
- Safety consequence category
- General remarks.

Potential hazardous conditions (excluding those identified as common industrial hazards) are developed using the hazards identified and the application of the hazard evaluation methods described above. The description of each hazardous condition includes release of material from a location caused by an event.

The hazard analysis database contains descriptions of causes for hazardous conditions. Identification of causes was based on the hazard identification results, reviews of the systems, historical event data, and other sources of information (existing safety documentation) including discussions with experienced facility personnel. Typical potential causes of

the postulated hazardous conditions included equipment failures, operational errors, abnormal operating conditions, poor operating practices, and environmental conditions. The potential causes of a postulated hazardous condition are identified to support a qualitative frequency evaluation.

Each hazardous condition was assessed to determine a qualitative frequency of occurrence and consequence in accordance with Tables D2.3-2, "Likelihood Categories" and D2.3-3, "Consequence Categories," respectively. The assessment of likelihood and consequence for each hazardous condition is a collective, qualitative judgment made by the hazard analysis team. The assessment is made for the initial hazard analysis, with the impact of existing controls taken into consideration. Subsequent likelihood and consequence assessments are made without considering controls and with considering controls (safety SSCs and TSRs).

These assessments are input to the hazard analysis database.

The likelihood assessments are made in occurrences per tank farm year. The general criteria for likelihood assessments are as follows:

F3: The hazardous condition based on the cause(s) postulated has occurred or is likely to occur

F2: The hazardous condition based on the cause(s) postulated is foreseeable, but unlikely

F1: The hazardous condition based on the cause(s) postulated is perhaps possible, but extremely unlikely

F0: The hazardous condition based on the cause(s) postulated is considered too improbable to warrant further consideration.

Frequency assessments for hazardous conditions that are close to the upper limit of a category are conservatively assigned to the higher-likelihood category.

The consequence category assessments address potential impacts on health and safety, and the environment. The general criteria for consequence assessments are as follows:

S3: On the basis of material at risk and cause(s) postulated, there is sufficient material and release energy to impact a receptor at the Hanford Site boundary

S2: On the basis of material at risk and cause(s) postulated, there is sufficient material and energy to impact a receptor 100 m from the source of the material at risk

S1: On the basis of material at risk and cause(s) postulated, the release is confined to the facility in which it occurred

S0: On the basis of material at risk and cause(s) postulated, there is insufficient material released to affect facility workers

E3: All S3 hazardous conditions or major leaks from large storage tanks

E2: All S2 hazardous conditions or liquid releases or leaks outside facility boundaries

E1: Postulated releases not included in E3 or E2

E0: No release postulated.

The more severe consequence categories include the less severe consequences. For example, a hazardous condition assessed as having onsite consequences (S2) is also considered to have facility worker consequences (S1).

The original hazard analyses identified preventive features (existing controls) that have the potential to prevent, and therefore reduce, the estimated frequency of a postulated hazardous condition. Design and administrative controls (e.g., procedures, polices, and programs) are included as preventive features. Preventive controls were identified primarily by reviewing selected facility procedures and process description documentation, and by consulting experienced facility personnel.

The hazard analyses also identified mitigative features (existing controls) that have the potential to mitigate the consequences of a postulated hazardous condition. Design and administrative controls (e.g., procedures, polices, and programs) are included as mitigative features. Mitigative controls are identified primarily by reviewing selected facility procedures and process description documentation, and by consulting experienced facility personnel.

The hazard evaluations are documented in individual reports which identify the participants and hazard evaluation scope, material at risk, major assumptions, references, and the information in the HazOp, PHA, and "What If" forms (WHC-SD-WM-TI-759, *Hazard Evaluations for the Tank Waste Remediation System Final Safety Analysis Report*).

D2.4 CANDIDATE ACCIDENT SELECTION

The hazardous conditions identified by the hazard evaluation are used to select candidate accidents for more detailed, quantitative analysis. The general selection criteria used are consistent with DOE-STD-3009-94: "The range of accident scenarios analyzed in a SAR should be such that a complete set of bounding conditions to define the envelope of accident conditions to which the operation could be subjected are evaluated and documented." Information generated by the accident selection process is included in the hazard analysis database.

The concept of selecting candidate accidents from all hazardous conditions identified is based on the feasibility of characterizing risk and developing controls from a representative set of accidents. An accident is considered to be representative of a set of accidents if it has similar accident release characteristics or involves similar accident phenomena. Accidents which represent the most severe consequences and the highest risk (combination of frequency and consequence) are selected.

Representative accidents will be selected using the following criteria: accidents that bound those of lesser but similar potential consequences; accidents that represent the highest risk; and other accidents, while not necessarily bounding, that represent accidents presenting some unique but important phenomenological challenge to system safety. The selection process comprises six steps:

1. Initial screening
2. Assignment of accident release attributes
3. Creation of hazardous material release bins
4. Sorting of the hazardous conditions by cause
5. Selection of representative bounding accidents for each release attribute category
6. Selection of unique accidents.

In accordance with DOE-STD-3009-94 and consistent with the graded approach, the risks of a facility/activity may be characterized and appropriate controls developed using the detailed analysis of a representative set of accidents.

Initial Screening. All hazardous conditions not assessed as S3 (offsite consequences) or S2 (onsite consequences) are dropped from the selection process. These hazardous conditions will be addressed using the qualitative hazard analysis results only.

Assignment of Accident Release Attributes. Each hazardous condition (e.g., accident) is described with certain accident release attributes (Table D2.4-1, "Accident Release Attributes") related to uncontrolled release of the material at risk. This is done to ensure that at least one candidate accident representing the possible spectrum of release conditions is selected.

The hazardous material release attributes used are as follows:

- Initial energy available to release the hazardous material
- Initial release location
- Initial form of the release.

Initial conditions are used for these assignments because it is possible (and sometimes likely) that other conditions may evolve during the course of the accident progression. For example, a release may begin as a pool of liquid on the ground but become airborne as wind blows over the pool. The progression of the accident is more thoroughly examined in the detailed accident analysis.

The attributes related to energy level have three designations: high, moderate, and low (Table D2.4-1). A high energy level (A) is assigned to energetic events such as explosions, fires, and criticality. A moderate energy level (B) is assigned to events such as liquid spray from pressurized

lines and from dropping hardware into a material that disturbs or causes it to splash or become airborne. A ventilation system that is breached when the fans are running could be assigned to a moderate energy classification. A low energy level (C) includes events such as leaks from nonpressurized liquid containers and leaks from passive ventilation systems.

The attributes related to the initial release location have three designations: atmospheric, ground surface, and subsurface (Table D2.4-1). In some cases, the accident may result in release to more than one destination. An accident resulting in significant portions of materials being released to more than one destination is assigned one location attribute associated with the most severe consequence. If it is clear that the overall accident significance is related to one location, and only minor effects are possible from the others, then only one location attribute is also assigned.

Three attributes are related to the initial form of the release: vapor/gas/aerosol, liquid/slurry, and solid/sludge (Table D2.4-1). Again, in some cases, the accident may result in release of more than one form of material and thus be assigned the attribute associated with the most severe consequence. If it is clear that the overall accident significance is related to one form, and only minor effects are possible from the others, then one form attribute is also assigned.

Creation of Hazardous Material Release Bins. Once the release attributes are assigned to each hazardous condition (accident), they are collected to form accident release categories or bins. Collecting accidents into bins involves grouping all accidents with common release attributes. For example, a certain accident may be assigned a high energy level for material that is released to the atmosphere as a vapor; its attributes would therefore be high/atmosphere/vapor. If bins are labeled using combinations of designators for the attributes shown in Table D2.4-1, the designation for the example would be A-1-a. All accidents with designator A-1-a are grouped together.

Sorting of the Hazardous Conditions by Cause. The hazardous conditions within each accident release category are organized by cause. This includes grouping by common accident phenomena (e.g., fire, criticality). The codes used to bin the accidents (hazardous conditions) by cause are listed in Table D2.4-2, "Hazardous Condition Cause Codes." For example, hazardous conditions involving a dome collapse and the dropping of a load are coded C10. Those accidents resulting in dome collapse caused by structural degradation are coded B12. All of these hazardous conditions are grouped in the same release attribute bin. Examination of the various causes supports selection of a representative set of accidents from each release attribute bin.

Selection of Representative Bounding Accidents for Each Release Attribute Category. Within each release attribute bin the most severe accident in terms of consequence, and the highest risk accident considering likelihood and consequences, are selected. In some cases, they are the same accident.

Selection of Unique Accidents. Accidents are selected to represent additional, unique causes within each release attribute bin. This is done to support development of controls for accidents with similar consequences but with different causes.

The final list of candidate accidents represents all S3 (offsite) and S2 (onsite) hazardous conditions identified by the hazard analysis. These hazardous conditions are grouped by candidate accident to facilitate incorporation of the information and conclusions from the accident analysis into the hazard analysis results when considering controls and hazard classification.

Adjustments are made to the list of accidents analyzed on the basis of results from accident analysis activities. To accommodate this anticipated situation, a table is developed to identify the candidate accidents and the accidents analyzed. The reasons for any differences are explained and the hazardous conditions are regrouped on the basis of the final set of analyzed accidents.

D2.5 CONTROLS IDENTIFICATION

The hazard analysis results and the accident analysis results are used to identify Safety-Class and Safety-Significant SSCs, TSRs, and other controls required to protect the public, workers, and environment. The process of control identification is illustrated in Figure D2.5-1, "Process to Identify Controls." Controls for protection of the public and onsite workers (100 m) are based on the results of the hazard analysis and the accident analysis. Controls for protection of facility workers and the environment are based primarily on the qualitative hazard analysis results.

The principal basis used for identifying safety SSCs and TSRs is risk guidelines. The objective is to identify the necessary and sufficient safety SSCs and TSRs that result in satisfying the risk guidelines. The risk guidelines for the public and onsite workers are given in Table D2.5-1, "Risk Guidelines." For facility workers, Safety-Significant SSCs and TSRs may be required for hazardous conditions with significant facility worker consequences (S1) and an uncontrolled frequency of anticipated (F3). Figure D2.5-2, "Risk Matrix" is a risk matrix that illustrates the application of the risk guidelines for all hazardous conditions.

The relationship between the quantitative risk guidelines and the qualitative risk matrix is determined by the frequency/consequence results of the accident analysis. For example, if the most severe consequence result for a hazardous condition (accident) exceeds the dose limit for the onsite worker, that hazardous condition is considered to have a consequence of S2 with the corresponding frequency. This combination of frequency/consequence determines the risk index of a hazardous condition based on Figure D2.5-2. If a hazardous condition has a frequency of F2 and a consequence of S2, it has a risk index of 12. For those hazardous conditions not directly analyzed as accidents, the risk index is determined by the qualitative frequency/ consequence results of the hazard evaluations as refined by the information from the accident analysis.

Decisions regarding classifying SSCs as Safety-Class or Safety-Significant, and identifying TSR controls, require the involvement of the cognizant hazard and accident analysts within TWRS Operations and Engineering. Control decisions are based on the best available information for the potential hazardous condition or postulated accident and the uncontrolled risk; the hazard topography; the hazardous conditions represented by the

postulated accident; and the existing and possible alternative controls, their estimated risk reduction effectiveness, and their estimated engineering and operations impacts (e.g., capital and operating costs, increased facility worker radiation/hazardous material exposure, environmental compliance, TWRS retrieval and disposal mission).

As shown in Figure D2.5-1, the safety SSCs, TSRs, and other controls are identified in a four-step process. First, for each postulated accident selected for quantitative analysis, a necessary and sufficient set of controls is identified. Second, using the hazard topography, a determination is made concerning whether the selected controls acceptably prevent or mitigate the postulated accident at all TWRS facilities where the accident could occur. If necessary, controls are identified for other TWRS facilities and operations. Third, a review of each hazardous condition represented by the analyzed accident is performed to determine if the selected controls acceptably prevent or mitigate the represented hazardous condition. Again, if necessary, additional or different controls are identified for the represented hazardous condition. Fourth, and finally, the total set of controls chosen to protect the public and onsite worker are reviewed to determine whether any significant facility worker hazards remain uncontrolled. If necessary, additional controls are identified for worker protection.

The decisions concerning safety SSCs, TSRs, and other controls providing Defense-in-Depth are documented. These controls have been incorporated into the hazard and accident analyses of the BIO (Chapter 5.0).

D2.6 HAZARD CLASSIFICATION

A final hazard classification of TWRS facilities is based on the results of the hazard and accident analyses. Hazard classification is based on the definitions of hazard categories in DOE 5480.23, *Nuclear Safety Analysis Reports* and the methodology for hazard classification in DOE-STD-1027-92, *Hazard Categorization and Accident Analysis Techniques for Compliance with DOE Order 5480.23, Nuclear Safety Analysis Reports*. As allowed by DOE-STD-1027-92, TWRS facilities that are independent (i.e., hazardous materials in one facility cannot interact with hazardous materials in another facility) are segmented and their individual hazard classifications are determined.

D2.7 HAZARD ANALYSIS DATABASE

The hazard analysis database is used to collect the results of the hazard analysis activities and to generate reports and evaluations to support the hazard and accident analyses. The results from the initial hazard analysis activities are input to the hazard analysis database. This database supports the activities of hazard identification, hazard topography, hazard evaluation, and safety SSC and TSR identification. As these activities proceed, along with the accident analysis, additional information becomes available that results in refinements of the initial qualitative judgments made in the hazard analysis. These refinements are incorporated in the hazard analysis results by updating the hazard analysis database. The final hazard analysis results are reflected in the updated database.

The hazard analysis database contains the TWRS hazard topography and the hazard identification and evaluation results. These data are related through use of the facility type code (Table D2.2-1). The contents of the hazard identification and hazard topography data tables are described in Sections D2.1 and D2.2, respectively. The hazard evaluation results are contained in the database, as follows.

1. **Identifier**—An identifier for each entry in the database that includes an indication of the facility or operation analyzed.

2. **Material at Risk**—A place keeper that indicates the location of the material inventory considered for release in each entry (Table D2.7-1, "General Material at Risk Categories"). Specific inventory information for each facility or location is contained in the hazard topography. Place keepers are used by the hazard evaluations to allow the analysis to be developed on a representative basis. For example, the hazardous conditions postulated in the hazard evaluation that result in the uncontrolled release of material from tank ventilation systems use the material at risk for these events as "contamination in ventilation system." The accident analysis uses a reasonably conservative quantified description of this material at risk for determining potential consequences.

3. **Hazardous Condition**—A brief description of the uncontrolled release of material including the location of the release and the condition of release.

4. **Cause**—A brief description of the cause of the uncontrolled release; generally, an identification of the initiating event for the release.

5. **Frequency**—The qualitative assessment of the frequency of the hazardous condition (Table D2.3-2). Two frequency estimates are included: frequency without controls, and frequency with selected SSCs and TSRs. These entries are subject to update using accident analysis results.

6. **Consequence**—Qualitative assessment of the consequence of the hazardous condition (Table D2.3-3). This entry is subject to update using accident analysis results.

7. **Risk**—The combination of frequency and consequence (Figure D2.5-2). Two risk estimates are included: risk without controls, and risk with selected SSCs and TSRs. These entries are subject to update using accident analysis results.

8. **Selected Controls**—Identifies selected SSCs and TSRs and whether they are preventive and mitigative features.

9. **Release Attribute**—This code is from the accident selection process (Table D2.4-1) and used to support candidate accident selection.

10. **Cause Group**—This is the hazardous condition cause group code (Table D2.4-2) used to support candidate accident selection and selection of controls.

11. **Facility Type**—TWRS facility-type code (Table D2.2-1) used to relate the hazard evaluation results to each TWRS facility using the hazard topography.

D3.0 HAZARD ANALYSIS RESULTS

The results of the hazard analysis include information on TWRS hazard topography, hazard identification, accident selection, hazard evaluation, and control identification. These results are presented in tabular form in Tables D3.4-1 through D3.4-5. Results of analyses performed in addition to those presented by the analyses results contained in those tables are included in the addenda to this BIO. The results of the hazard analysis for WRSS are contained in Addendum 1, "Tank 241-C-106 Sluicing Safety Analysis." The results of the hazard analysis for the replacement cross-site transfer system are contained in Addendum 2, "Replacement Cross-Site Transfer System Safety Analysis." The results of the hazard analysis for the 702-AZ ventilation system are contained in Addendum 3, "702-AZ Ventilation System (241-AZ-702) Safety Analysis." The results of the hazards analysis for the 241-AZ-101 mixer pump test are contained in Addendum 4, "Safety Analysis for Tank 241-AZ-101 Mixer Pump Test."

D3.1 HAZARD TOPOGRAPHY RESULTS

The TWRS hazard topography captures the list of TWRS facilities within the scope of the TWRS BIO, results of the hazard identification activities, and relates the individual hazard evaluations to TWRS facilities. The three principle sources of information for the hazard topography are as follows:

- WHC-SD-WM-HIE-007
- The TWRS hazard evaluation results
- The TWRS accident analysis results.

The hazard topography is displayed in Tables D3.1-1, D3.1-2, D3.1-3, and the D3.1-4 series (D3.1-4-A, D3.1-4-AN, D3.1-4-AP, D3.1-4-AW, D3.1-4-AX, D3.1-4-AY, D3.1-4-AZ, D3.1-4-B, D3.1-4-BX, D3.1-4-BY, D3.1-4-C, D3.1-4-S, D3.1-4-SX, D3.1-4-SY, D3.1-4-T, D3.1-4-TX, D3.1-4-TY, D3.1-4-U).

D3.2 SUMMARY OF OCCURRENCES

The hazard identification activity included a review of occurrence reports for TWRS (200 Area tank farms and affiliated facilities). These reports were examined to assure that a comprehensive set of hazards and potential accident causes were addressed by the hazard analysis activity. Comprehensiveness was assured by comparing the nature of the occurrences to the potential causes or accidents identified by the hazard analysis, and

verifying that those occurrences not covered are not material to the hazard analysis results. Review of the occurrences also was used to assist in determining frequencies for some of the hazardous conditions in the TWRS HazOps and PHAs.

Two databases of occurrences associated with the 200 Area tank farms and affiliated facilities have been generated in support of the TWRS BIO. Development of these databases included a review of all unusual occurrence reports produced by Atlantic Richfield Hanford Company from January 1972 through June 1977, Rockwell Hanford Company from June 1977 through June 1987, and Westinghouse Hanford Company from June 1987 through December 1989. Copies of tank farm-associated unusual event reports, critiques, and event fact sheets for the years 1986 through 1990 were reviewed and included in the databases, where appropriate. The Occurrence Reporting and Processing System (ORPS) database was obtained electronically for the years 1990 to May 1998. This database includes all unusual occurrence reports, off-normal events, and critiques generated by the Westinghouse Hanford Company. The ORPS database was searched for occurrences in the tank farms and associated facilities. Actions that resulted in minor skin contaminations or reports of a minor spread of contamination (specks or contamination spread to personal clothing) from a tank farm or associated facility were not included in the databases, which are documented in Tables D3.2-1, "Tank Farm Events, Off-Normal (ON) and Critiques" and D3.2-2, "Summary of Occurrences."

Table D3.2-3, "Hazard Analysis Cause Groups and Associated Occurrences" is a summary of the occurrences which were reviewed and compared to the list of cause groups from the hazard analysis results. The list consists of the representative accidents and causes of the accidents. Table D3.2-4, "Occurrences Not Included in the Hazard Analysis" is the list of occurrences not included in the hazard analyses and the number of times they occurred. All occurrence causes which potentially contribute to uncontrolled releases were addressed in the hazard analysis.

D3.3 ACCIDENT SELECTION RESULTS

The TWRS hazard evaluations identified hazardous conditions resulting in uncontrolled releases of radioactive or hazardous material and their frequency of occurrence and consequences. From the list of hazardous conditions resulting in significant offsite or onsite consequences, a set of accidents was selected to represent these hazardous conditions. Table D3.3-1, "Analyzed Accidents" lists the accident selected for analysis. Table D3.3-2, "Analyzed Accidents and the Represented Hazardous Conditions" lists the selected accidents along with the hazardous conditions they represent.

D3.4 HAZARD EVALUATION RESULTS

The hazard evaluations identified hazardous conditions with the potential for significant health, environmental, occupational, and radiation exposure consequences. Tables D3.4-1, D3.4-2, D3.4-3, D3.4-4, and D3.4-5 list the hazardous conditions by consequence category (Note: hazardous conditions are listed in decreasing order of frequency for each consequence category).

Included in the tables are potential environmental consequences. All consequence and frequency assessments in these tables are based on an assumed TWRS configuration with no controls.

D3.5 CONTROL IDENTIFICATION RESULTS

Controls (e.g., safety SSCs and TSRs) were identified using hazard and accident analysis results. The safety SSCs and TSRs were allocated to all hazardous conditions identified by the hazard evaluations. Tables 5.4-1, 5.4-2, and 5.4-3 in Chapter 5.0 of the main text contain the results of the control identification.

D4.0 REFERENCES

AIChE, 1992, *Guidelines for Hazard Evaluation Procedures*, 2nd edition, Center for Chemical Process Safety of the American Institute of Chemical Engineers, New York, New York.

DOD, 1987, *Military Standard System Safety Program Requirements*, Mil-Std 882B (Updated by Notice 1), U.S. Department of Defense, Washington, D.C.

DOE 5480.23, 1992, *Nuclear Safety Analysis Reports*, U.S. Department of Energy, Washington, D.C.

DOE-STD-1027-92, 1992, *Hazard Categorization and Accident Analysis Techniques for Compliance with DOE Order 5480.23, Nuclear Safety Analysis Reports*, U.S. Department of Energy, Washington, D.C.

DOE-STD-3009-94, 1994, *Preparation Guide for U.S. Department of Energy Nonreactor Nuclear Facility Safety Analysis Reports*, U.S. Department of Energy, Washington, D.C.

Edrington, R. S., 1991, *BY and C Tank Farm Supernate Sample Analysis [Revision of 16220-PCL90-117]* (internal memo 28110-PCL91-048 to R. K. Tranbarger, June 3), Westinghouse Hanford Company, Richland, Washington.

Esch, R. A., 1995, *Results for 241-BY-105 Grab Samples* (internal memo 8E480-95-020 to J. M. Jones, April 6), Westinghouse Hanford Company, Richland, Washington.

Hodgson, K. M., 1995, *Sampling of Waste in 241-A-105* (internal memo 7A430-95-018 to N. W. Kirch, August 28), Westinghouse Hanford Company, Richland, Washington.

Huckaby, J. L., 1996, *Technical Basis for Orgscrn Spreadsheet* (PNNL Letter OT:073096 to J. E. Meacham, Westinghouse Hanford Company, July 30), Pacific Northwest National Laboratory, Richland, Washington.

OSD-T-151-00007, 1996, *Operating Specifications for Double-Shell Tanks*, Rev. H-17, Westinghouse Hanford Company, Richland, Washington.

OSD-T-151-00013, 1996, *Operating Specifications for Single-Shell Waste Storage Tanks*, Rev. D-10, Westinghouse Hanford Company, Richland, Washington.

OSD-T-151-00030, 1996, *Operating Specifications for Watch List Tanks*, Rev. B-17, Westinghouse Hanford Company, Richland, Washington.

PNL-10099, 1994, *Tank Characterization Report for Single-Shell Tank B-111*, Rev. 0, Pacific Northwest Laboratory, Richland, Washington.

PNL-10101, 1994, *Tank Characterization Report for Single-Shell Tank T-102*, Rev. 0, Pacific Northwest Laboratory, Richland, Washington.

Rollison, M.D., 1995, *Results for 241-BX-106 Grab Samples* (internal memo 8E480-95-018 to J. M. Jones, April 4), Westinghouse Hanford Company, Richland, Washington.

Superfund Amendments and Reauthorization Act (SARA) of 1986, 42 USC 6921, et seq., as amended.

Sutey, M. J., 1993, *Waste Compatibility Assessment of Tank 241-AN-101 with Tanks 241-BX-110 and 241-BX-111*, (internal memo 7C242-93-029 to S. D. Godfrey, August 3), Westinghouse Hanford Company, Richland, Washington.

Weiss, R. L., 1988, *Analysis of Tank 241-SX-104 Samples* (internal memo 12221-PCL88-147, Rev. 1, to K. G. Carothers, August 15), Westinghouse Hanford Company, Richland, Washington.

Weiss, R. L., 1990, *Analysis of Liquid Sample from Tank 241-SX-101* (internal memo 17212-PCL90-043 to V. C. Boyles, February 22), Westinghouse Hanford Company, Richland, Washington.

WHC-EP-0063, 1993, *Hanford Site Solid Waste Acceptance Criteria*, Rev. 4, Westinghouse Hanford Company, Richland, Washington.

WHC-EP-0182, 1995, *Waste Tank Summary Report for Month Ending December 31, 1995*, Rev. 93, Westinghouse Hanford Company, Richland, Washington.

WHC-EP-0182, 1996, *Waste Tank Summary Report for Month Ending March 31, 1996*, Rev. 96, Westinghouse Hanford Company, Richland, Washington.

WHC-EP-0643, 1993, *Tank Characterization Report for Single-Shell Tank 241-U-110*, Rev. 0, Westinghouse Hanford Company, Richland, Washington.

WHC-EP-0739, 1994, *Tank Characterization Report for Single-Shell Tank 241-BX-107*, Rev. 0, Westinghouse Hanford Company, Richland, Washington.

WHC-EP-0772, 1994, *Characterization of the Corrosion Behavior of the Carbon Steel Liner in Hanford Site Single Shell Tanks*, Westinghouse Hanford Company, Richland, Washington.

WHC-EP-0861, 1995, *Status Report for Inactive Miscellaneous Underground Storage Tanks at Hanford Site 200 Areas*, Rev. 0, Westinghouse Hanford Company, Richland, Washington.

WHC-SD-EN-ES-040, 1994, *Engineering Study of 50 Miscellaneous Inactive Underground Radioactive Waste Tanks Located at the Hanford Site, Washington*, Rev. 0, Westinghouse Hanford Company, Richland, Washington.

WHC-SD-WM-DP-099, 1995, *Final Report for Tank 241-C-103, Push Mode Sample Cores 63 and 66*, Rev. 1, Westinghouse Hanford Company, Richland, Washington.

WHC-SD-WM-DP-101, 1995, *216-Day Safety Screen Results and Final Report for Tank 241-TY-104, Auger Samples 95-AUG-008 and 95-AUG-009*, Rev. 0-A, Westinghouse Hanford Company, Richland, Washington.

WHC-SD-WM-DP-103, 1996, *Final Report for Tank 241-BY-106, Push Mode Sample Cores 64, 65, and 121*, Rev. 0A, Westinghouse Hanford Company, Richland, Washington.

WHC-SD-WM-DP-104, 1995, *Final Report for Tank 241-BY-104, Auger Sample 95-AUG-012 and 95-AUG-013*, Rev. 1, Westinghouse Hanford Company, Richland, Washington.

WHC-SD-WM-DP-135, 1995, *45-Day Safety Screening Results for Tank 241-BX-103, Push Mode, Cores 86 and 87*, Rev. 0, Westinghouse Hanford Company, Richland, Washington.

WHC-SD-WM-DP-136, 1995, *45-Day Safety Screening Results and Final Report for Tank 241-A-102, Auger Sample 95-AUG-033*, Rev. 0, Westinghouse Hanford Company, Richland, Washington.

WHC-SD-WM-DP-137, 1995, *45-Day Safety Screening Results for Tank 241-B-104, Push Mode, Cores 88 and 89*, Rev. 0, Westinghouse Hanford Company, Richland, Washington.

WHC-SD-WM-DP-139, 1995, *45-Day Safety Screening Results for Tank 241-B-101, Push Mode, Cores 90 and 91*, Rev. 0, Westinghouse Hanford Company, Richland, Washington.

WHC-SD-WM-DP-140, 1995, *45-Day Safety Screening Results for Tank 241-B-106, Push Mode, Cores 93 and 94*, Rev. 0, Westinghouse Hanford Company, Richland, Washington.

WHC-SD-WM-DP-141, 1995, *90-Day Safety Screening Results and Final Report for Tank 241-T-108, Auger Samples 95-AUG-035 and 95-AUG-037*, Rev. 1, Westinghouse Hanford Company, Richland, Washington.

WHC-SD-WM-DP-143, 1995, *90-Day Safety Screening Results and Final Report for Tank 241-T-106, Auger Samples 95-AUG-038 and 95-AUG-039*, Rev. 1, Westinghouse Hanford Company, Richland, Washington.

WHC-SD-WM-DP-153, 1996, *Final Report for Tank 241-BY-110, Rotary Mode Cores 92, 95, 101,103, 106, 107, 109, 96 & 113*, Rev. 1, Westinghouse Hanford Company, Richland, Washington.

WHC-SD-WM-DP-156, 1996, *Final Report for Tank 241-S-107, Push Mode Cores 105, 110 and 111*, Rev. 1, Westinghouse Hanford Company, Richland, Washington.

WHC-SD-WM-DP-160, 1995, *45-Day Safety Screening Results for Tank 241-B-204, Push Mode Cores 112 and 114*, Rev. 0, Westinghouse Hanford Company, Richland, Washington.

WHC-SD-WM-DP-165, 1996, *45-Day Safety Screening Results for Tank 241-AN-102, Grab Samples 2AN-95-1 Through 2AN-95-6 and 102-AN-1 through 102-AN-4*, Rev. 0, Westinghouse Hanford Company, Richland, Washington.

WHC-SD-WM-DP-169, 1996, *45-Day Safety Screening Results for Tank 241-B-203, Push Mode Cores 115, 120 and 122*, Rev. 0, Westinghouse Hanford Company, Richland, Washington.

WHC-SD-WM-DP-171, 1996, *Final Report for Tank 241-BX-104, Push Mode Cores 126 and 127*, Rev. 1, Westinghouse Hanford Company, Richland, Washington.

WHC-SD-WM-ER-350, 1995, *Historical Tank Content Estimate for the Southeast Quadrant of the Hanford 200 Areas*, Rev. 0, ICF Kaiser Hanford Company, Richland, Washington.

WHC-SD-WM-ER-366, 1995, *Tank Characterization Report for Double-Shell Tank 241-SY-102*, Rev. 0, Westinghouse Hanford Company, Richland, Washington.

WHC-SD-WM-ER-367, 1994, *Tank Characterization Report for Single-Shell Tank 241C110*, Rev. 0, Westinghouse Hanford Company, Richland, Washington.

WHC-SD-WM-ER-369, 1994, *Tank Characterization Report for Single-Shell Tank 241-T-105*, Rev. 0, Westinghouse Hanford Company, Richland, Washington.

WHC-SD-WM-ER-370, 1994, *Tank Characterization Report for Single Shell Tank 241-S-104*, Rev. 0, Westinghouse Hanford Company, Richland, Washington.

WHC-SD-WM-ER-372, 1994, *Tank Characterization Report for Single-Shell Tank 241-T-104*, Rev. 0, Westinghouse Hanford Company, Richland, Washington.

WHC-SD-WM-ER-382, 1994, *Tank Characterization Report for Single-Shell Tank 241-T-107*, Rev. 0, Westinghouse Hanford Company, Richland, Washington.

WHC-SD-WM-ER-402, 1995, *Tank Characterization Report for Single-Shell Tank 241-C-109*, Rev. 0, Westinghouse Hanford Company, Richland, Washington.

WHC-SD-WM-ER-405, 1995, *Tank Characterization Report for Single-Shell Tank 241-B-102*, Rev 0, Westinghouse Hanford Company, Richland, Washington.

WHC-SD-WM-ER-406, 1995, *Tank Characterization Report for Single-Shell Tank 241-BX-105*, Rev. 0, Westinghouse Hanford Company, Richland, Washington.

WHC-SD-WM-ER-408, 1995, *Tank Characterization Report for Single-Shell Tank 241-BX-101*, Rev. 0, Westinghouse Hanford Company, Richland, Washington.

WHC-SD-WM-ER-474, 1995, *Tank Characterization Report for Single-Shell Tank 241-C-107*, Rev. 0, Westinghouse Hanford Company, Richland, Washington.

WHC-SD-WM-ER-475, 1995, *Tank Characterization Report for Single-Shell Tank 241-C-111*, Rev. 0, Westinghouse Hanford Company, Richland, Washington.

WHC-SD-WM-ER-482, 1995, *Tank Characterization Report for Single-Shell Tank 241-TY-106*, Rev. 0, Westinghouse Hanford Company, Richland, Washington.

WHC-SD-WM-ER-483, 1995, *Tank Characterization Report for Single-Shell Tank 241-U-201*, Rev. 0, Westinghouse Hanford Company, Richland, Washington.

WHC-SD-WM-ER-484, 1995, *Tank Characterization Report for Single-Shell Tank 241-U-202*, Rev. 0, Westinghouse Hanford Company, Richland, Washington.

WHC-SD-WM-ER-485, 1995, *Tank Characterization Report for Single-Shell Tank 241-U-203*, Rev. 0, Westinghouse Hanford Company, Richland, Washington.

WHC-SD-WM-ER-496, 1995, *Tank Characterization Report for Single-Shell Tank 241-U-204*, Rev. 0, Westinghouse Hanford Company, Richland, Washington.

WHC-SD-WM-ER-533, 1996, *Tank Characterization Report for Single-Shell Tank 241-BY-108*, Rev. 0, Westinghouse Hanford Company, Richland, Washington.

WHC-SD-WM-ER-540, 1996, *Tank 241-T-111 Characterization Report*, Rev. 0, Westinghouse Hanford Company, Richland, Washington.

WHC-SD-WM-HIE-007, 1996, *Tank Waste Remediation System Final Safety Analysis Report Hazard Identification/Facility Configuration Verification Report*, Rev. 0, Westinghouse Hanford Company, Richland, Washington.

WHC-SD-WM-ISB-001, 1993, *Hanford Site Tank Farm Facilities Interim Safety Basis*, Rev. 0, Westinghouse Hanford Company, Richland, Washington.

WHC-SD-WM-SARR-009, 1994, *Construction, Maintenance, and Operational Activities Analysis Summaries*, Rev. 0, Westinghouse Hanford Company, Richland, Washington.

WHC-SD-WM-SARR-010, 1995, *Heat Removal Characteristics of Waste Storage Tanks*, Rev. 1, Westinghouse Hanford Company, Richland, Washington.

WHC-SD-WM-SARR-011, 1994, *Toxic Chemical Considerations for Tank Farm Releases*, Rev. 0, Westinghouse Hanford Company, Richland, Washington.

WHC-SD-WM-SARR-016, 1995, *Tank Waste Compositions and Atmospheric Dispersion Coefficients for Use in Accelerated Safety Analysis Consequence Assessments*, Rev. 1, Westinghouse Hanford Company, Richland, Washington.

WHC-SD-WM-SARR-033, 1996, *Safety Criteria for Organic Watch List Tanks at the Hanford Site*, Rev. 1, Westinghouse Hanford Company, Richland, Washington.

WHC-SD-WM-SARR-037, 1996, *Development of Radiological Concentrations and Unit Liter Doses for Tank Waste Remediation System Final Safety Analysis Report Radiological Consequence Calculations*, Rev. 0, Westinghouse Hanford Company, Richland, Washington.

WHC-SD-WM-SARR-038, 1996, *Assessment of the Potential for Ferrocyanide Propagating Reaction Accidents*, Rev. 1, Westinghouse Hanford Company, Richland, Washington.

WHC-SD-WM-TI-725, 1996, *Tank Farm Nuclear Criticality Review*, Rev. 0, Westinghouse Hanford Company, Richland, Washington.

WHC-SD-WM-TI-759, 1996, *Hazard Evaluation for the Tank Waste Remediation System Final Safety Analysis Report*, Rev. 0, Westinghouse Hanford Company, Richland, Washington.

Figure D2-1. Flow Diagram of the Hazard Analysis Process.

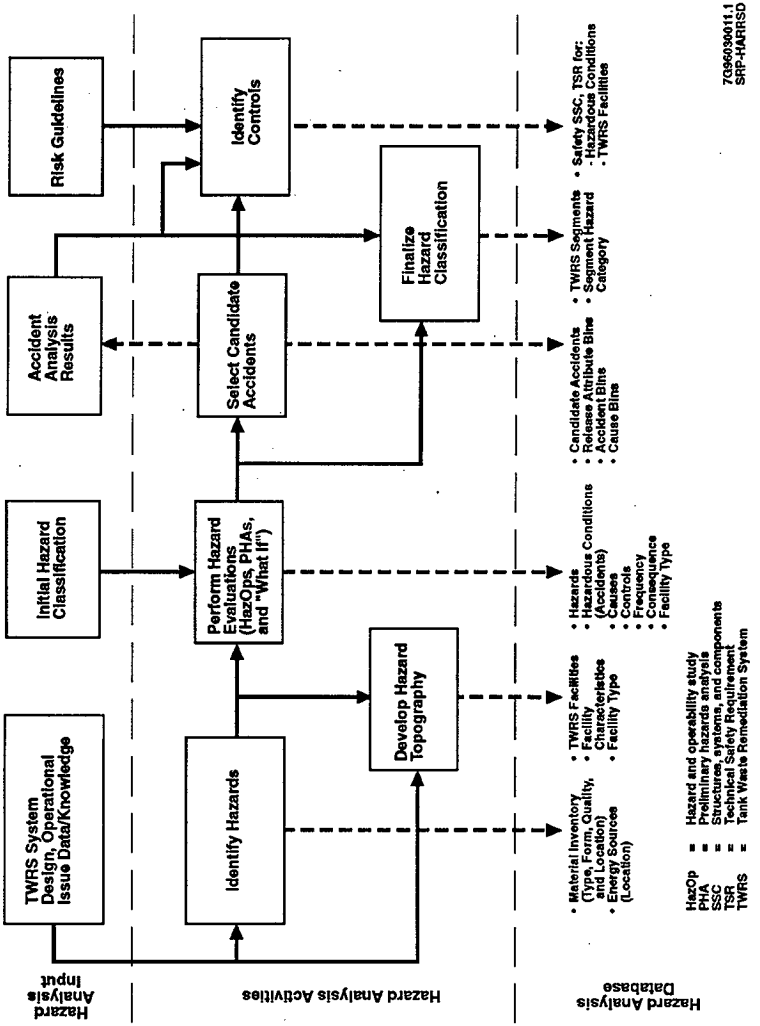

Figure D2.5-1. Process to Identify Controls.

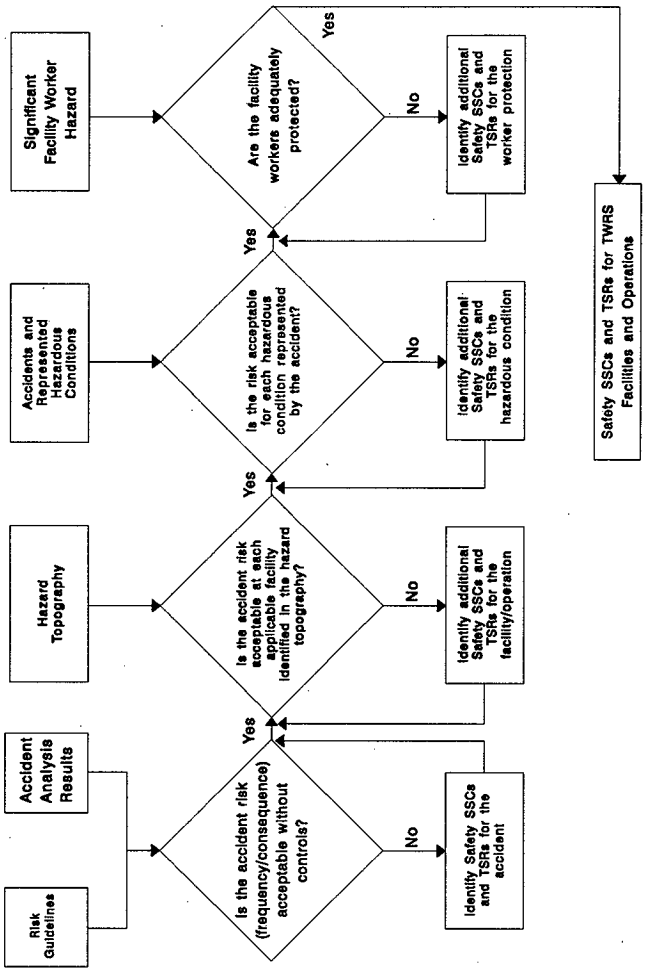

Figure D2.5-2. Risk Matrix.

Likelihood	Consequences			
	S0	S1	S2	S3
F3	7	11	---------- ------14------ ----------	---------- ------16------ ----------
F2	4	8	12	---------- ------15------ ----------
F1	2	5	9	13
F0	1	3	6	10

Considered for identification of Safety Structures, Systems, and Components and Technical Safety Requirements.

Requires identification of Safety Structures, Systems, and Components and Technical Safety Requirements.

This page intentionally left blank.

Table D2.1-1. Hazards Identification[a] Form.

Energy Classification[b]	Tank A		Facility B		Facility C	
	PT	PE	PF	PE	PF	PE
Corrosive						
Explosive/Pyrophoric						
Nuclear Criticality						
Flammable Materials						
Thermal Radiation						
Chemical Reactions						
Friction						
Electrical						
Kinetic-Rotational						
Kinetic-Linear						
Mass, Gravity, Height						
Pressure-Volume						
Thermal (except radiant)						

EXAMPLE

[a]The hazards identification represents the hazards that could potentially cause an uncontrolled release of radioactive or hazardous materials only. Hazards only resulting in personnel injury are not included.

[b]See Table 3-1b for the specific energy classifications represented by the numeric designators.
PT = Potentially Present in the tanks.
PF = Potentially Present in the facility.
PE = Potentially Present elsewhere in/adjacent to facility.

Table D2.1-2. Hazard Identification Checklist and Energy Designators.

A Corrosive
1 Acids
2 Caustic
3 Natural chemicals
4 Decon solution
5 High temperature waste
6 Other

B Explosive/Pyrophoric
1 Caps
2 Primer cord
3 Dynamite
4 Scrub chemicals
5 Dusts
6 Hydrogen
7 Gases, other
8 Nitrates
9 Peroxides-superoxides
10 Pu and U metal
11 Other

C Nuclear Criticality
1 Vaults
2 Temporary storage areas
3 Shipping and receiving areas
4 Filters
5 Casks
6 Burial ground
7 Storage racks
8 Canals and basins
9 Decon solution
10 Trucks, forklifts, dollies
11 Hand carry
12 Cranes/lifts
13 Hot cells, assembly, inspection
14 Laboratories
15 Tanks
16 Other

D Flammable Materials
1 Packing materials
2 Rags
3 Gasoline
4 Lube oil
5 Coolant oil
6 Paint solvent
7 Diesel fuel
8 Buildings and contents
9 Trailers and contents
10 Grease
11 Hydrogen
12 Nitric acid
13 Organics
14 Gases-other
15 Liquids-other
16 Sodium
17 Other

E Thermal Radiation
1 Furnaces and boilers
2 Steam liners
3 Lab equipment
4 Solar
5 Other

F Chemical Reactions
1 Uncontrolled chemical reactions
2 Other

G Friction
1 Belts
2 Bearings
3 Fans
4 Gears
5 Motors
6 Power tools
7 Other
8 All

H Electrical
1 Battery banks
2 Diesel units
3 Transformers
4 Wiring
5 Switchgear
6 Underground wiring
7 Cable runs
8 Service outlets/fittings
9 Pumps
10 Motors
11 Heaters
12 Power tools
13 Small equipment
14 Electrical equipment
15 Hot plates
16 High voltage
17 Locomotive, electrical
18 Transmission lines
19 Other

I Kinetic-Rotational
1 Centrifuges
2 Motors
3 Pumps
4 Fans
5 Laundry equipment
6 Shop equipment
7 Other

J Kinetic-Linear
1 Cars, trucks, buses
2 Forklifts, dollies, carts
3 Railroad
4 Obstructions
5 Crane loads
6 Pressure vessel blowdown
7 Other

K Mass, Gravity, Height
1 Human effort
2 Stairs
3 Lifts and cranes
4 Bucket and ladder
5 Trucks
6 Slings
7 Hoists
8 Elevators
9 Jacks
10 Scaffold and ladders
11 Pits
12 Elevated doors
13 Vessels
14 Vaults
15 Excavations
16 Raw water lines
17 Other

L Pressure-Volume
1 Boilers
2 Surge tanks
3 Autoclave
4 Test Loops
5 Gas bottles
6 Pressure vessels
7 Stressed members
8 Gas receivers
9 Negative pressure collapse
10 Steam headers and lines
11 Positive pressure release
12 Other

M Thermal (except radiant)
1 Convective
2 Exposed components
3 Heaters
5 Fire boxes
6 Electric wiring, equip
7 Furnaces
8 Steam lines
9 Welding torch
10 Other

Table D2.2-1. Tank Waste Remediation System Facility Type Codes.

Effluent Retention	
ER	Cribs, ditches, ponds
Facilities	
F204	204-AR Unloading Facility
F213	213-W Compactor Building
F244	244-AR Vault
Multiple	
M	Multiple facilities (e.g. as in the case of common cause event)
Other	
A	Abandoned or inactive TWRS equipment
G	General
O	Other (interfacing facilities/equipment)
OM	Miscellaneous Inactive Storage Facility
Pipes	
PA	Above ground pipe
PC	Contained pipe (e.g. cross-site line)
PD	Double encased pipe
PS	Single encased pipe (direct buried)
Storage Facilities	
S90	90-Day Storage Pad, Intermediate Holding Area, Satellite Accumulation Area
SS	2727 W Sodium Storage
SV	Vertical Storage

Tanks * (See Example Section Below)	
T	Tanks, non-specific (Add any appropriate tank type designators. If applicable to all tanks, do not add any tank type designator.)
CD	DCRT (244-TX, 244-U)
CN	Non-DCRT catch tank, drainage type (vent and lift station, aging waste vent)
DS	Double Shelled Tanks non-specific (Add any appropriate characteristic designators.)
	A Air lift circulators (aging waste tanks)
	C Caustic addition tank (e.g. 107-AN)
	E Evaporator feed tank
	H Flammable gas tanks (hydrogen)
	O Organic tanks
	P Active transfer/mixer pumps (e.g. 102-SY)
	V Active ventilation
SS	Single Shelled Tanks non-specific (Add any appropriate characteristic designators.)
	D Dry crust tank (114-SX)
	H Flammable gas tanks (hydrogen)
	L High heat load (>40,000 btu)
	O Organic tanks
	V Active ventilation tanks
SD	Double Shelled Tanks or Single Shelled Tanks (Add any appropriate Characteristic designators. - See DS and SS)
Pits Boxes and Caissons	
WB	Clean out box, sluice transfer box
WD	Diversion box, diverter station, pump pit, valve pit
WF	Flush pit, service pit, caisson, leak detection pit

*EXAMPLE OF FACILITY TYPE CODE FOR TANKs:
The letter T indicates that the facility is a tank of some kind. Each additional designator separated by periods will supply additional information as indicated in the column under the Tank section of the table.

- T.DS.A.H - Flammable gas (hydrogen), double shelled tank with air lift circulators.
- T.SD.L.V - High Heat load tank, either single shelled or double shelled with active ventilation.
- T.SS.D - Dry crust, single shelled tank.
- T.CD.V - DCRT with active ventilation.

Table D2.3-1. Representative Hazard Analysis.

Facility/topic	Hazard evaluation identifier	Technique	Characteristics
Facility interfaces - 222-S Laboratory, 242-A Evaporator, 242-S Evaporator, 242-T Evaporator, B Plant, T Plant, U Plant, PUREX, PFP	I-222S, I-242A, I-242S, I-242T, I-BPLANT, I-TPLANT, I-UPLANT, I-PUREX, I-PFP	HazOp	Impacts on TWRS facilities of active physical interfaces
204-AR Transfer Facility	204AR	HazOp	Lab waste, transfer of waste by vehicle
244-AR Vault	244AR	HazOp	Storage for liquid waste
Overground transfers	OGT	HazOp	SST waste transfer overground
Tank 241-C-106	106C	HazOp	SST, high heat, active ventilation
Tank 241-AN-107	107AN	HazOp	DST, caustic addition
Tank 241-AW-102	102AW	HazOp	DST, evaporator interface, active ventilation
Tank 241-S-102	102S	HazOp	SST, flammable gas, organics, passive ventilation
Tank 241-SX-114	114SX	HazOp	SST, dry crust, high heat, active ventilation
Cross-site transfer (Tank 241-SY-102) (selected portions of Project W-058)	XS, W058	HazOp	DST, waste transfer by pipeline
209-E Storage Area	90D	PHA	Storage for RCRA[a] and low-level waste
213 Compactor	213W	PHA	Equipment decontamination activities
244-AR Vault	244AR-PH	PHA	Storage for liquid waste
2727-W Building	2727W	PHA	Liquid sodium storage
Cleanout boxes	COB	PHA	Interface with waste transfer system
Cribs, ditches, and ponds	CDP	PHA	Disposal of liquid waste
Inactive miscellaneous underground storage tank (plus other inactive facilities)	Identifier ends in - I, e.g., CRN-05-I	PHA	Various types and forms of radioactive and hazardous material
Siphoning	TSF	PHA	Various types and forms of radioactive and hazardous material
Tank operations (Tank 241-AZ-102)	BND, CVR, CRN, DCN, FR, GRN, ITK, RAD, RSR, SFF, VEH	PHA	DST, aging waste
Tank operations (Tank 241-BX-109)	BND, CVR, CRN, DCN, FR, GRN, ITK, RAD, RSR, SFF, VEH	PHA	SST, passive ventilation
Tank operations (Tank 241-SY-101)	BND, CVR, CRN, DCN, FR, GRN, ITK, RAD, RSR, SFF, VEH	PHA	DST, flammable gas, active ventilation, mixer pump
Vertical storage units	VSU	PHA	Storage for solid low-level waste
Common cause failure	CCF	"What If"	Events with potential impact on multiple TWRS facilities
External events	EE	"What If"	Events with potential impact on multiple TWRS facilities
Natural phenomena	NP	"What If"	Events with potential impact on multiple TWRS facilities

[a] Resource Conservation and Recovery Act of 1976, 42 USC 6901, et seq.

Table D2.3-2. Likelihood Categories.

F3 ($>10^{-2}$)	Anticipated events: Frequency greater than once in 100 operating years
F2 (10^{-4} to 10^{-2})	Unlikely: Frequency between once in 10,000 years and once in 100 operating years
F1 (10^{-6} to 10^{-4})	Extremely unlikely: Frequency between once in 1 million years and once in 10,000 operating years
F0 ($<10^{-6}$)	Beyond extremely unlikely: Frequency of less than once in a million operating years.

Table D2.3-3. Consequence Categories.

Category	Definition
S3	Significant radiological or chemical exposure to the public
S2	Significant radiological or chemical exposure to onsite worker
S1	Significant radiation or chemical exposure to facility worker
S0	No significant effect outside facility systems. No consequences for facility workers, onsite workers, or public.
E3	Offsite discharge OR discharge to groundwater
E2	Significant discharge onsite
E1	Localized discharge of hazardous material
E0	No significant environmental consequence

Table D2.4-1. Accident Release Attributes.

Accident release attributes (BIN)		
Initial energy level	Initial release location	Initial release form
A. High	1. Atmosphere	a. Vapor/gas/aerosol
B. Moderate	2. Ground surface	b. Liquid/slurry
C. Low	3. Subsurface	c. Solid/sludge
OCC - Occupational Safety		
RP - Radiation Protection		

Table D2.4-2. Hazardous Condition Cause Codes.

Cause description	Criticality	Fire/ Explosion	Tank Dome Collapse	Release	Human Error Release	Non-release/ Occupational
Addition of aggravating materials/Exothermic reaction	A01	B01	C01	D01	E01	F01
Internal aggravating causes	A02			D02	E02	
Over concentration	A03				E03	F03
Intrusive activity	A04	B04		D04	E04	F04
Non-specific/Multiple external events or phenomena/Other	A05		C05	D05	E05	F05
Error in transfer/Backflow/ Overflow/Filling DST annulus	A06	B06	C06	D06	E06	F06
Ventilation failure		B07	C07	D07	E07	F07
Internal buildup of flammable gas/Internal ignition source		B08				F08
External fire/External ignition source		B09		D09		F09
Excess weight/Dropping/Heavy snow			C10	D10	E10	F10
Vacuum			C11	D11		
Structural degradation/Leak		B12	C12	D12		F12
Over rated equipment			C13		E13	
Confinement failure				D14	E14	F14
Excess agitation					E15	
Corrosion				D16		
Water hammer				D17		
Seismic event/Volcanic activity				D18		
Flooding, pipe failure			C19	D19		
High winds/Tornados/Hail				D20		
Lightning		B21		D21		
Excavation				D22		F22
Aircraft crash		B23		D23		
Low temperature/Freezing				D24		
Vehicle accidents		B25		D25	E25	F25
Structural Damage		B26	C26	D26	E26	F26

Table D2.5-1. Risk Guidelines.

Event frequency category	Event frequency (yr^{-1})	Onsite	Offsite
Radiological risk guidelines			
		Effective dose equivalent (rem)	
Anticipated	$>10^{-2}$ to 10^{0}	.5	.1
Unlikely	$>10^{-4}$ to $\leq 10^{-2}$	5	.5
Extremely unlikely	$>10^{-6}$ to $\leq 10^{-4}$	10	4
Toxic chemical risk guidelines			
		Primary concentration guidelines	
Anticipated	$>10^{-2}$ to 10^{0}	$\leq$ ERPG-1	$\leq$ PEL-TWA
Unlikely	$>10^{-4}$ to $\leq 10^{-2}$	$\leq$ ERPG-2	$\leq$ ERPG-1
Extremely unlikely	$>10^{-6}$ to $\leq 10^{-4}$	$\leq$ ERPG-3	$\leq$ ERPG-2

*Source: Bacon, R. F., 1996, Tank Waste Remediation System Accident Analysis Risk Evaluation Guidelines (Letter 9651709 to J. E. Kinzer, U.S. Department of Energy, Richland Operations Office, April 22), Westinghouse Hanford Company, Richland, Washington.

ERPG = emergency response planning guideline.
PEL = permissible exposure limit.
TWA = time-weighted average.

Table D2.7-1. General Material At Risk Categories.

Material at risk for contents	1. Tank contents
	2. Tank headspace
	3. Rail or truck tanker contents
	4. Ventilation filter contents
	5. Contents of pipeline and/or source tank during transfer
	6. Contents of sump or encasement
Material at risk for contamination	7. Contamination in ventilation system
	8. Contamination in pit of box
	9. Contamination on vehicle
	10. Contamination on equipment or tools

This page intentionally left blank.

Table D3.1-1. Material at Risk Table.[1] (94 sheets)

Field Name	MAR-Subject	MAR-Description	MAR-Classification	Capacity	Material Type	Physical Form	Volume or Activity	Transient	Quantity	Comments
2727-WA-M	Tank Contents	None	NA	NA	NA	NA	NA	NA	NA	No tanks associated with 2727-WA.
2727-WA-M	Tank Headspace	None	NA	NA	NA	NA	NA	NA	NA	No tanks associated with 2727-WA.
2727-WA	Rail or Truck Tanker Contents	Tanker truck heel	NA	5000 gal estimated	NA	Liquid/ Residual	Heel of liquid	Yes	NA	An abandoned truck tanker is parked within the fenced area near 2727-WA. Inside has been rinsed out, radioactive heel expected to remain.
2727-WA	Contamination on Vehicle	Tanker truck (noted above)	NA	NA	NA	Residual	One spot about 1 mR/hr	Yes	NA	Contaminated tanker truck stored near 2727-WA.
2727-WA-M	Contamination on Equipment or Tools	None	NA	NA	NA	NA	NA	NA	NA	2727-WA is a clean storage area with the exception of the truck tanker noted above and a buffer area with possibly contaminated wood pallets.
2727-WA-M	Ventilation Filter Contents	None	NA	NA	NA	NA	NA	NA	NA	No ventilation associated with 2727-WA.
2727-WA-M	Contamination In Ventilation System	De-entrainer	NA	NA	NA	NA	NA	NA	NA	No de-entrainer.
2727-WA-M	Contamination In Ventilation System	Seal loop	NA	NA	NA	NA	NA	NA	NA	No seal loops.
2727-WA-M	Contents of Pipeline and/or Source Tank During Transfer	NA	NA	NA	NA	NA	NA	NA	NA	See transfer line Table 7.
2727-WA-M	Contents of Sump or Encasement	None	NA	NA	NA	NA	NA	NA	NA	No sumps or encasements.
2727-WA-M	Contamination in Pit or Box	None	NA	NA	NA	NA	NA	NA	NA	No pits or boxes.
2727-WA-M	SARA 313 Materials	None	NA	NA	NA	NA	NA	NA	NA	NA
2727-WA-O	Other	Unlabeled drum	Unknown	55 gal drum	NA	Unknown	Unknown, up to 55 gallons	Yes	NA	Recently dropped off. Found in the Northwest corner of the fenced area, outside the building.

Table D3.1-1. Material at Risk Table.[1] (94 sheets)

Field Name	MAR-Subject	MAR-Description	MAR-Classification	Capacity	Material Type	Physical Form	Volume or Activity	Transient	Quantity	Comments
2727-WA-O	Other	Gas bottles	Acetylene, oxygen, Ar	480 cubic feet per bottle	NA	Vapor	Four bottles @ 480 cubic feet, max.	Yes	4 bottles, 2 Ar, 1 oxygen, 1 acetylene	Used as a mobile welding unit. Stored behind 2727-WA.
2727-WA-O	Other	Calcium chloride	Calcium chloride	55 gallons	NA	Solid	<55 gallons	Yes	One container	Stored in connex near 2727-WA.
2727-WA-O	Other	Scale clean	Scale clean	55 gallons	NA	Liquid	55 gallons	Yes	One container	Stored in connex near 2727-WA.
2727-WA-O	Other	Dry inhibited acid descier	Dry inhibited acid descier	55 gallons	NA	Solid	<55 gallons	Yes	One container	Stored in connex near 2727-WA.
2727-WA-O	Other	Neutrasorb	Neutrasorb	55 gallons	NA	Liquid	30 gallons	Yes	One container	Stored in connex near 2727-WA.
2727-WA-O	Other	Kenite D.E., celite	Diatomaceous earth	55 gallons	NA	Solid	55 gallons	Yes	One drum	Stored in connex near 2727-WA.
2727-WA-O	Other	Sodium carbonate	Sodium carbonate	110 gallons	NA	Liquid	55 gallons	Yes	One drum	Stored in connex near 2727-WA.
2727-WA-O	Other	Neutracit 2	Caustic neutralizer	165 gallons	NA	Solid	165 gallons	Yes	Three drums	Stored in connex near 2727-WA.
2727-WA-O	Other	Absorbent	Solid absorbent	500 lbs estimated	NA	Solid	About 20 bags, each about 10 lbs	Yes	About 20 bags, each about 10 lbs.	Stored in connex near 2727-WA.
2727-W	Tank Contents	Tank 1	Sodium	About 15,000 gal (12' dia x 21'-3" with dished head)	NA	Solid	300 gal heel	No	NA	Total of 178 tons of sodium remaining in all three tanks.
2727-W	Tank Contents	Tank 2	Sodium	About 15,000 gal (12' dia x 21'-3" with dished head)	NA	Solid	300 gal heel	No	NA	There is 50,503 kg of sodium in this tank. This material was transferred to FFTF. Total of 178 tons of sodium remaining in all three tanks.
2727-W	Tank Contents	Tank 3	Sodium	About 15,000 gal (12' dia x 21'-3" with dished head)	NA	Solid	7500 gal (half full)	No	NA	There is 43,127 kg in this tank. Some of the sodium was removed at FFTF. Total of 178 tons of sodium remaining in all three tanks.

Table D3.1-1. Material at Risk Table.[1] (94 sheets)

Field Name	MAR-Subject	MAR-Description	MAR-Classification	Capacity	Material Type	Physical Form	Volume or Activity	Transient	Quantity	Comments
2727-W	Tank Contents	Tank 4	Sodium	About 15,000 gal (12' dia x 21'-3" with dished head)	NA	Solid	15000 gal (full) 50,855 kg	No	NA	Total of 178 tons of sodium remaining in all three tanks.
2727-W	Tank Contents	Tank 5	Sodium	About 15,000 gal (12' dia x 21'-3" with dished head)	NA	Solid	15000 gal (full) 48,828 kg	No	NA	Total of 178 tons of sodium remaining in all three tanks.
2727-W	Tank Headspace	Tank 1	Nitrogen	NA	NA	Vapor	14700 gal (capacity - contents)	No	NA	Tank headspace filled with nitrogen cover gas.
2727-W	Tank Headspace	Tank 2	Nitrogen	NA	NA	Vapor	14700 gal (capacity - contents)	No	NA	Tank headspace filled with nitrogen cover gas.
2727-W	Tank Headspace	Tank 3	Nitrogen	NA	NA	Vapor	7500 gal (capacity - contents)	No	NA	Tank headspace filled with nitrogen cover gas.
2727-W	Tank Headspace	Tank 4	Nitrogen	NA	NA	Vapor	Minimal	No	NA	Tank headspace filled with nitrogen cover gas.
2727-W	Tank Headspace	Tank 5	Nitrogen	NA	NA	Vapor	Minimal	No	NA	Tank headspace filled with nitrogen cover gas.
2727-W-M	Rail or Truck Tanker Contents	None	NA	NA	NA	NA	NA	NA	NA	No rail or truck tankers associated with sodium storage building.
2727-W-M	Contamination on Vehicle	None	NA	NA	NA	NA	NA	NA	NA	No contaminated vehicles associated with sodium storage building.
2727-W-M	Contamination on Equipment or Tools	None	NA	NA	NA	NA	NA	NA	NA	No contaminated tools or equipment associated with sodium storage building.
2727-W-M	Ventilation Filter Contents	None	NA	NA	NA	NA	NA	NA	NA	No ventilation filters associated with sodium storage building.
2727-W-M	Contamination In Ventilation System	None	NA	NA	NA	NA	NA	NA	NA	No ventilation system associated with sodium storage building.
2727-W-M	Contents of Pipeline and/or Source Tank During Transfer	NA	NA	NA	NA	NA	NA	NA	NA	See transfer line Table 7.
2727-W-M	Contents of Sump or Encasement	None	NA	NA	NA	NA	NA	NA	NA	No sumps or encasements in sodium storage building.

Table D3.1-1. Material at Risk Table.[1] (94 sheets)

Field Name	MAR-Subject	MAR-Description	MAR-Classification	Capacity	Material Type	Physical Form	Volume or Activity	Transient	Quantity	Comments
2727-W-M	Contamination in Pit or Box	None	NA	NA	NA	NA	NA	NA	NA	No pits or boxes associated with sodium storage building.
2727-W-M	SARA 313 Materials	None	NA	NA	NA	NA	NA	NA	NA	NA
2727-W-O	Other	None	NA	NA	NA	NA	NA	NA	NA	NA
209-E	Tank Contents	None	NA	NA	NA	NA	NA	NA	NA	NA
209-E	Tank Headspace	NA	NA	NA	NA	NA	NA	NA	NA	No tanks
209-E-M	Rail or Truck Tanker Contents	None	NA	NA	NA	NA	NA	NA	NA	No rail or truck tankers associated with 209 E.
209-E-M	Contamination on Vehicle	None	NA	NA	NA	NA	NA	NA	NA	No contaminated vehicles associated with 209 E.
209-E-M	Contamination on Equipment or Tools	None	NA	NA	NA	NA	NA	NA	NA	No contaminated tools or equipment associated with 209 E.
209-E-M	Ventilation Filter Contents	None	NA	NA	NA	NA	NA	NA	NA	No ventilation associated with 209 E.
209-E-M	Contamination In Ventilation System	De-entrainer	NA	NA	NA	NA	NA	NA	NA	No ventilation associated with 209 E.
209-E-M	Contamination In Ventilation System	Seal loop	NA	NA	NA	NA	NA	NA	NA	No ventilation associated with 209 E.
209-E-M	Contents of Pipeline and/or Source Tank During Transfer	NA	NA	NA	NA	NA	NA	NA	NA	See transfer line Table 7.
209-E-M	Contents of Sump or Encasement	None	NA	NA	NA	NA	NA	NA	NA	No sump associated with 209 E.
209-E-M	Contamination in Pit or Box	None	NA	NA	NA	NA	NA	NA	NA	No pits or boxes associated with 209 E.
209-E-M	SARA 313 Materials	Pyrofoam	NA	875 lbs (max reported in 1995)	NA	Solid	850 lbs on 12/19/95	Yes	NA	Not observed on walkdown.
209-E-M	SARA 313 Materials	Granular urea	NA	360 lbs (max reported in 1995)	NA	Solid	0 lbs on 12/19/95	Yes	NA	Not observed on walkdown.
209-E-M	SARA 313 Materials	3M super 77 spray adhesive	NA	247 fluid oz (max reported in 1995)	NA	Liquid	192 fluid oz. on 12/19/95	Yes	NA	Aerosol cans; not observed on walkdown.

Table D3.1-1. Material at Risk Table.[1] (94 sheets)

Field Name	MAR-Subject	MAR-Description	MAR-Classification	Capacity	Material Type	Physical Form	Volume or Activity	Transient	Quantity	Comments
209-E-M	SARA 313 Materials	AS527 polyurethane satin water based paint	NA	732 fluid oz. (max reported in 1995)	NA	Liquid	732 fluid oz. on 12/19/95	Yes	NA	Aerosol cans; not observed on walkdown.
209-E-M	SARA 313 Materials	"Clean up"	NA	5600 lbs (max reported in 1995)	NA	Solid	1600 lbs on 12/19/95	Yes	NA	Not observed on walkdown.
209-E-M	SARA 313 Materials	CRC-2-26 (aerosol)	NA	112 fluid oz. (max reported in 1995)	NA	Liquid	112 fluid oz on 12/19/95	Yes	NA	Not observed on walkdown.
209-E-M	SARA 313 Materials	Argon/ methane gas 90/10	NA	720 cubic feet (max reported in 1995)	NA	Gas	720 cubic feet on 11/30/95	Yes	NA	Not observed on walkdown.
209-E-M	SARA 313 Materials	Krylon 1601-25012 spray enamel	NA	247 fluid oz. (max reported in 1995)	NA	Liquid	156 fluid oz on 12/19/95	Yes	NA	Not observed on walkdown.
209-E-M	SARA 313 Materials	Propane	NA	50 gallons (max reported in 1995)	NA	Liquid	50 gallons on 11/30/95	Yes	NA	Not observed on walkdown.
209-E-M	SARA 313 Materials	Shell alvania EP grease 2	NA	5 gallons (max reported in 1995)	NA	Liquid	5 gallons on 1/1/95	Yes	NA	Not observed on walkdown.
209-E-M	SARA 313 Materials	Spray on primers	NA	72 fluid oz. (max reported in 1995)	NA	Liquid	72 fluid oz. on 12/19/95	Yes	NA	Not observed on walkdown.
209-E-M	SARA 313 Materials	WD-40 aerosol	NA	272 fluid oz. (max reported in 1995)	NA	Liquid	144 fluid oz. on 12/19/95	Yes	NA	Not observed on walkdown.
209-E-O	Other	Drums	Tank contacted toxic wastes (mixed waste)	55 gallons each	NA	Solid	Forty-four 55 gallon drums	Yes	44 drums	NA
209-E-O	Other	DOT boxes (7A)	Tank contacted toxic wastes (mixed waste)	400 gallons (3' x 3' x 6') or 180 gallons (2' x 2' x 6')	NA	Solid	Two 400 gallon boxes and one 180 gallon box	Yes	Three boxes	NA
209-E-O	Other	DOT box (7A)	Tank contacted persistent waste* (mixed waste)	1700 gallons (5' x 5' x 9')	NA	Solid	One 1700 gallon box	Yes	One box	*Generated at 241-A valve pit.
209-E-O	Other	Drums	Toxics* (mixed waste)	55 gallons each	NA	Solid	Three 55 gallon drums	Yes	Three drums	*Generated at 241-U farm and 241-S farm.
209-E-O	Other	Drums	Flammable material (Non-rad)	55 gallons each	NA	Solid	Two 55 gallon drums	Yes	Two drums	NA

Table D3.1-1. Material at Risk Table.[1] (94 sheets)

Field Name	MAR-Subject	MAR-Description	MAR-Classification	Capacity	Material Type	Physical Form	Volume or Activity	Transient	Quantity	Comments
209-E-0	Other	Drum	Regulated rags (non-rad)	55 gallon	NA	Solid	One 55 gallon drum	Yes	One drum	NA
209-E-0	Other	Drum	Corrosive materials (Non-rad)	55 gallon	NA	Solid	One 55 gallon drum	Yes	One drum	Incompatible materials segregated within the storage area.
209-E-0	Other	Drum	Ethylene glycol (Non-rad)	55 gallon or 25 gallon	NA	Liquid	Four 55 gallon drums and one 25 gallon drum	Yes	Five drums	NA
AR-204	Tank Contents	Tank 1 - catch tank	Same matl as tank car, tank trailer or chemical make-up solutions identified below	1,500 gal	NA	Liquid	500 gal	No	NA	Floor drains through 204-AR drain to the catch tank.
AR-204	Tank Contents	Tank 2 - chemical make-up	1 lb/gal sodium nitrite solution [H-2-70704]	500 gal	NA	Liquid	120 gal	No	NA	NA
AR-204	Tank Contents	Tank 3 - chemical make-up	5.4 M caustic [H-2-70704]	500 gal	NA	Liquid	80 gal	No	NA	NA
AR-204	Tank Contents	Tank 4 - chemical make-up	High pH buffer solution (sodium hydroxide and sodium phosphate) [H-2-70704]	200 gal	NA	Liquid	0.00	No	NA	Solution was used for pH probe calibration. Currently not in use.
AR-204	Tank Contents	Tank 5 - chemical make-up	50% sodium hydroxide [H-2-70704]	1800 gal	NA	Liquid	0 gal Residual	No	NA	Currently not in use.
AR-204	Tank Contents	Underground storage tank	Diesel fuel	550 gal	NA	Liquid	550 gal	No	NA	For diesel generator.
AR-204	Tank Headspace	Catch tank	NA	NA	NA	NA	NA	NA	NA	No data available.
AR-204	Tank Headspace	Tank 2 - chemical make-up	NA	NA	NA	NA	NA	NA	NA	No data available.
AR-204	Tank Headspace	Tank 3 - chemical make-up	NA	NA	NA	NA	NA	NA	NA	No data available.
AR-204	Tank Headspace	Tank 4 - chemical make-up	NA	NA	NA	NA	NA	NA	NA	No data available.

Table D3.1-1. Material at Risk Table.[1] (94 sheets)

Field Name	MAR-Subject	MAR-Description	MAR-Classification	Capacity	Material Type	Physical Form	Volume or Activity	Transient	Quantity	Comments
AR-204	Tank Headspace	Tank 5 - chemical make-up	NA	NA	NA	NA	NA	NA	NA	No data available.
AR-204	Tank Headspace	Underground storage tank	NA	NA	NA	NA	NA	NA	NA	No data available.
AR-204	Rail or Truck Tanker Contents	Railroad tank car	Between 7-14 pH, chloride <0.01 M, no separable organic phase, <0.01 g/gal fissile material	20,000 gal	NA	Liquid	Up to 20,000 gal*	No	NA	Transporting waste from 340 facility. *Railcar just being hooked up during walkdown, exact volume unknown.
AR-204	Rail or Truck Tanker Contents	Tank trailer	Between 7-14 pH, chloride <0.035 M, no separable organic phase, <0.01 g/gal fissile material	5,000 gal	NA	Liquid	Up to 5,000 gal*	No	NA	Waste from 222-S laboratory. Other facilities hope to send waste to 204-AR in the future. *No tank trailer present during walkdown.
AR-204-M	Contamination on Vehicle	See vehicles above	NA	NA	NA	NA	NA	NA	NA	NA
AR-204-M	Contamination on Equipment or Tools	Contaminated equipment (e.g., pumps) in unloading area	Residual contamination	NA	NA	Residue	NA	Yes	NA	NA
AR-204-M	Contamination on Equipment or Tools	Shed with contaminated material	Soiled laundry	NA	NA	Solid	NA	Yes	NA	Located outside building on east side. Shed locked up, not entered during walkdown.
AR-204-M	Ventilation Filter Contents	Primary HEPAs HSG-1 and HSG-2*	NA	1 R/hr at six inches	NA	Particu-late	NA	Yes, filters disposed of in accord with EP-0063, Rev 4 (9/93)	NA	*For main unloading area ventilation system.
AR-204-M	Ventilation Filter Contents	HEPA HSG-3*	NA	1 R/hr at six inches	NA	Particu-late	NA	Yes, filters disposed of in accord with EP-0063, Rev 4 (9/93)	NA	*For catch tank ventilation.

Table D3.1-1. Material at Risk Table.[1] (94 sheets)

Field Name	MAR-Subject	MAR-Description	MAR-Classification	Capacity	Material Type	Physical Form	Volume or Activity	Transient	Quantity	Comments
AR-204-M	Contamination In Ventilation System	Moisture separators	Process condensate	NA	NA	Liquid	NA	No	2 moisture separators	Moisture separators on main unloading area vent system and on catch tank vent system.
AR-204-M	Contamination In Ventilation System	Seal loop	NA	NA	NA	NA	NA	NA	NA	No seal loops identified associated with ventilation system.
AR-204-M	Contents of Pipeline and/or Source Tank During Transfer	NA	NA	NA	NA	NA	NA	NA	NA	See transfer line Table 7.
AR-204-M	Contents of Sump or Encasement	Catch tank pit sump	None*	5 gal (1' x 1' x 8")	NA	NA	None*	NA	NA	*No known spills from catch tank.
AR-204-M	Contamination in Pit or Box	Catch tank pit	None*	3300 gal (6' x 7' x 10'-6")	NA	NA	None*	NA	NA	*No known spills from catch tank.
AR-204-M	SARA 313 Materials	Plastic bottles/jugs of disodium phosphate	Disodium phosphate	20 lbs = max reported in 1995	NA	Solid	20 lbs on 12/19/95	Yes	NA	Not observed on walkdown. Cog unaware of this - no longer used.
AR-204-M	SARA 313 Materials	Bag of sodium hydroxide	Sodium hydroxide, 100%	1100 lbs = max reported in 1995	NA	Solid	650 lbs on 12/19/95	Yes	NA	Not observed on walkdown. Make-up material for sodium hydroxide solution.
AR-204-M	SARA 313 Materials	Sodium hydroxide solution	18.6% sodium hydroxide solution	145 gal = max reported in 1995	NA	Liquid	45 gal on 12/19/95	Yes	NA	Material is located in tank 3 noted above.
AR-204-M	SARA 313 Materials	Sodium nitrite solution	11% sodium nitrite solution	265 gal = max reported in 1995	NA	Liquid	187 gal on 12/19/95	Yes	NA	Material is located in tank 2 noted above.
AR-204-M	SARA 313 Materials	Diesel fuel	Diesel fuel	500 gal	NA	Liquid	500 gal on 1/1/95	No	NA	Material is located in below ground tank, noted above.
AR-204-O	Other	204-AR spill kit	Spill clean-up materials	Small shed*	NA	Solid	NA	Yes	NA	*Small shed behind (North of) 204-AR. Locked, not entered during walkdown.
213 Compactor Bldg	Tank Contents	213-W-TK-1	Believed to be rainwater	1875 gal	NA	Liquid	1875	No	NA	This IMUST is on the non-TWRS owned IMUST list.
213 Compactor Bldg	Tank Headspace	213-W-TK-1	NA	NA	NA	NA	0 gal (tank believed to be full of rainwater)	NA	NA	No available headspace believed present.

Table D3.1-1. Material at Risk Table.[1] (94 sheets)

Field Name	MAR-Subject	MAR-Description	MAR-Classification	Capacity	Material Type	Physical Form	Volume or Activity	Transient	Quantity	Comments
213 Compactor Bldg*	Rail or Truck Tanker Contents	None	NA	NA	NA	NA	NA	NA	NA	No rail or truck tankers associated with 213-W.
213 Compactor Bldg*	Contamination on Vehicle	None	NA	NA	NA	NA	NA	NA	NA	No contaminated vehicles stored in 213-W.
213 Compactor Bldg	Contamination on Equipment or Tools	Possibly contaminated instruments*	NA	Small shelf in work room, all <100 mR/hr	NA	Residue	<100 mH/hr	Yes*	NA	*Possibly contaminated instruments are brought into the work area for repairs. All contamination is low level.
213 Compactor Bldg	Ventilation Filter Contents	HEPA filters for 213-W bldg. ventilation	NA	1 R/hr at six inches	NA	Residue	NA	Yes	4 HEPA filters	Two parallel sets of two HEPAs in series.
213 Compactor Bldg	Ventilation Filter Contents	Breather filter for IMUST (213-W-TK-1)	NA	1 R/hr at six inches	NA	Residue	NA	Yes	NA	Breather filter on IMUST adjacent to 213-W.
213 Compactor Bldg*	Contamination In Ventilation System	De-entrainer	NA	NA	NA	NA	NA	NA	NA	No de-entrainer.
213 Compactor Bldg*	Contamination In Ventilation System	Seal loop	NA	NA	NA	NA	NA	NA	NA	No seal loops.
213 Compactor Bldg	Contents of Pipeline and/or Source Tank During Transfer	NA	NA	NA	NA	NA	NA	NA	NA	See transfer line Table 7.
213 Compactor Bldg*	Contents of Sump or Encasement	None	NA	NA	NA	NA	NA	NA	NA	No sumps or encasements.
213 Compactor Bldg	Contamination in Pit or Box	IMUST pit	Looked empty	About 240 gal (4' x 4' x 2'?)	NA	NA	Looked empty, no warnings of contamination	No	NA	Concrete pit with steel lid. Opened lid on walkdown; could see risers to tank, no evidence of contaminated material in pit.
213 Compactor Bldg*	SARA 313 Materials	None	NA	NA	NA	NA	NA	NA	NA	NA
213 Compactor Bldg	Other	Asphalt emulsion cleaner	Cleaning compound	55 gal drum	NA	NA	Unknown, up to 55 gallons	Yes	NA	Believed to be temporarily stored in building, not used in building.

Table D3.1-1. Material at Risk Table.[1] (94 sheets)

Field Name	MAR-Subject	MAR-Description	MAR-Classification	Capacity	Material Type	Physical Form	Volume or Activity	Transient	Quantity	Comments
213 Compactor Bldg	Other	Chemical cleaners, degreasers*	Solvent cleaners	Small quantities, <1 gal	NA	Liquid	None during walkdown*	Yes	NA	*Chemical cleaners/degreasers may be brought into facility temporarily. None observed during walkdown.
AR-244	Tank Contents	244-AR-001	Unknown*	46,400 gal (20' dia x 19'-9")	NA	Liquid	2300 gal	No	NA	*No data obtained.
AR-244	Tank Contents	244-AR-002	Strontium sludge from tank 104-AX and flush water*	46,400 gal (20' dia x 19'-9")	Liquid Sludge	Liquid Solid	23,000 gal total, believed to be 600 gal of sludge, remainder = liquid* Activity of 200 Ci/gal for the sludge calculated, (196 Ci/gal Sr90 and 3.22 Ci/gal Cs137)	No	NA	*600 gallons of sludge from AX-103 stored in tank 4, word-of-mouth from retired operator recalls transfer of sludge and other liquids in tank 4 to tank 2. Remainder of liquid believed to be water transferred from cell 3 sump, flush water from tank 4, and sump transfers conducted when new filter vault was installed.
AR-244	Tank Contents	244-AR-003	Unknown*	4700 gal (9'-6" dia x 9')	NA	Liquid	2000 gal	No	NA	*No data on tank contents obtained.
AR-244	Tank Contents	244-AR-004	Unknown*	4700 gal (9'-6" dia x 9')	NA	Liquid	<300 gal	No	NA	*600 gallons of sludge from AX-103 stored in tank 4, word-of-mouth from retired operator recalls transfer of sludge and other liquids in tank 4 to tank 2.
AR-244	Tank Contents	Underground fuel tank	Diesel fuel	550 gal	NA	Liquid	525 gal	No	NA	Reading read off level gauge during walkdown.
AR-244	Tank Headspace	244-AR-001	No hydrogen or organics	NA	NA	Vapor	About 44,100 gal (capacity - contents) activity unknown	No	NA	NA
AR-244	Tank Headspace	244-AR-002	0.222 mole % hydrogen	NA	NA	Vapor	About 23,400 gal (capacity - contents) activity unknown	No	NA	NA
AR-244	Tank Headspace	244-AR-003	No hydrogen or organics	NA	NA	Vapor	About 2700 gal (capacity - contents) activity unknown	No	NA	NA

Table D3.1-1. Material at Risk Table.[1] (94 sheets)

Field Name	MAR-Subject	MAR-Description	MAR-Classification	Capacity	Material Type	Physical Form	Volume or Activity	Transient	Quantity	Comments
AR-244	Tank Headspace	244-AR-004	No hydrogen or organics	NA	NA	Vapor	About 4400 gal (capacity - contents) activity unknown	No	NA	NA
AR-244-M	Rail or Truck Tanker Contents	None	NA	NA	NA	NA	NA	NA	NA	No rail or truck tankers associated with 244-AR vault.
AR-244-M	Contamination on Vehicle	None	NA	NA	NA	NA	NA	NA	NA	No contaminated vehicles associated with 244-AR vault.
AR-244-M	Contamination on Equipment or Tools	Contaminated equipment stored in wind reduction facility	NA	62'-8" x 40' x 18' are dimensions of wind reduction facility	NA	Solid	Unknown*	Yes*	NA	*This building contained numerous bags of waste material. Old cameras and other equipment, possibly contaminated have been stored within this building and are currently being sorted out. Four 55 gal drums of material with labels indicating lead were stored at the far west end of the building, actual contents unknown.
AR-244-M	Contamination on Equipment or Tools	Failed equipment in storage tubes	NA	Each 4200 gal (4'-6" dia x 35')	NA	Solids	Unknown*	Yes	NA	*Failed equipment was put in tubes below cover blocks within the canyon. The vault has been in stand-by mode for years. Actual contents of the storage tubes is currently unknown.
AR-244-M	Ventilation Filter Contents	Canyon ventilation filters	NA	NA	NA	Residue	Unknown*	Yes	NA	*The ventilation associated with 244-AR has not been operated since 1993. Some filters have been removed for use in other locations. Most are located in underground vaults (current quantities and activity levels are unknown).

Table D3.1-1. Material at Risk Table.[1] (94 sheets)

Field Name	MAR-Subject	MAR-Description	MAR-Classification	Capacity	Material Type	Physical Form	Volume or Activity	Transient	Quantity	Comments
AR-244-M	Ventilation Filter Contents	Vessel ventilation filters	NA	NA	NA	Residue	Unknown*	Yes	NA	*The ventilation associated with 244-AR has not been operated since 1993. Most filters are located in underground vaults (current quantities and activity levels are unknown).
AR-244	Contamination In Ventilation System	De-entrainer	NA	NA	NA	NA	NA	NA	NA	No de-entrainer associated with ventilation, but liquids are collected in a seal pot.
AR-244	Contamination In Ventilation System	Seal pot	Process condensate	100 gal (2' dia x 4'-1")	NA	Liquid	Unknown*	No	NA	*The ventilation associated with 244-AR has not been operated since 1993. (current quantity and activity level of liquid in seal pot is unknown).
AR-244-M	Contents of Pipeline and/or Source Tank During Transfer	NA	NA	NA	NA	NA	NA	NA	NA	See transfer line Table 7.
AR-244	Contents of Sump or Encasement	Vault cell sumps	NA	25 gal (18" x 18" x 18") estimated	NA	Liquid	2400 gal in cell 3* about 15 gal in cell 1 (wt factor reading of 23) and about 2 gal in cell 2 (Wt. factor reading of 3)	No	One sump in each of the three cells	*Sump has overflowed; liquid in the bottom of the cell.
AR-244	Contamination in Pit or Box	Valve pit	Residual contamination*	1300 gal (4'-6" dia x 11')	NA	Residue	NA	No	NA	*Lines 717 and 716 (drain lines) pass through this valve pit on the way to tanks in the 244 AR vault.
AR-244-M	SARA 313 Materials	None*	NA	NA	NA	NA	NA	NA	NA	Diesel fuel noted above.
AR-244-M	Other	None	NA	NA	NA	NA	NA	NA	NA	NA
241-AR-151*	Tank Contents	NA	NA	NA	NA	NA	NA	NA	NA	No tanks within the diversion box.
241-AR-151*	Tank Headspace	NA	NA	NA	NA	NA	NA	NA	NA	No tanks within the diversion box.

Table D3.1-1. Material at Risk Table.[1] (94 sheets)

Field Name	MAR-Subject	MAR-Description	MAR-Classification	Capacity	Material Type	Physical Form	Volume or Activity	Transient	Quantity	Comments
241-AR-151*	Rail or Truck Tanker Contents	None	NA	NA	NA	NA	NA	NA	NA	No rail or truck tankers associated with diversion box.
241-AR-151*	Contamination on Vehicle	None	NA	NA	NA	NA	NA	NA	NA	No contaminated vehicles associated with diversion box.
241-AR-151*	Contamination on Equipment or Tools	None	NA	NA	NA	NA	NA	NA	NA	No contaminated tools associated with diversion box.
241-AR-151*	Ventilation Filter Contents	None	NA	NA	NA	NA	NA	NA	NA	No ventilation associated with diversion box.
241-AR-151*	Contamination In Ventilation System	De-entrainer	NA	NA	NA	NA	NA	NA	NA	No ventilation associated with diversion box.
241-AR-151*	Contamination In Ventilation System	Seal loop	NA	NA	NA	NA	NA	NA	NA	No ventilation associated with diversion box.
241-AR-151*	Contents of Pipeline and/or Source Tank During Transfer	NA	NA	NA	NA	NA	NA	NA	NA	See transfer line Table 7.
241-AR-151*	Contents of Sump or Encasement	None	NA	NA	NA	NA	NA	NA	NA	No sump associated with diversion box. See transfer line Table 7 for encasement discussion.
241-AR-151	Contamination in Pit or Box	Diversion box	Residual contamination*	2800 gal (7' x 7' x 7'-8")	NA	Residue*	NA	No	NA	*Diversion box contents drain to 244-AR vault. Diversion box transports mixed waste solutions from processing and decontamination operations. Also NCAW (neutralized current acid waste)and NHW (neutralized high level waste).
241-AR-151*	SARA 313 Materials	None	NA	NA	NA	NA	NA	NA	NA	NA
241-AR-151*	Other	None	NA	NA	NA	NA	NA	NA	NA	NA
241-ER-151*	Tank Contents	NA	NA	NA	NA	NA	NA	NA	NA	No tanks within the diversion box.
241-ER-151*	Tank Headspace	NA	NA	NA	NA	NA	NA	NA	NA	No tanks within the diversion box.

Table D3.1-1. Material at Risk Table.[1] (94 sheets)

Field Name	MAR-Subject	MAR-Description	MAR-Classification	Capacity	Material Type	Physical Form	Volume or Activity	Transient	Quantity	Comments
241-ER-151*	Rail or Truck Tanker Contents	NA	NA	NA	NA	NA	NA	NA	NA	No rail or truck tankers associated with diversion box.
241-ER-151*	Contamination on Vehicle	None	NA	NA	NA	NA	NA	NA	NA	No contaminated vehicles associated with diversion box.
241-ER-151*	Contamination on Equipment or Tools	None	NA	NA	NA	NA	NA	NA	NA	No contaminated equipment or tools associated with diversion box.
241-ER-151*	Ventilation Filter Contents	None	NA	NA	NA	NA	NA	NA	NA	No ventilation associated with diversion box.
241-ER-151*	Contamination In Ventilation System	De-entrainer	NA	NA	NA	NA	NA	NA	NA	No ventilation associated with diversion box.
241-ER-151*	Contamination In Ventilation System	Seal loop	NA	NA	NA	NA	NA	NA	NA	No ventilation associated with diversion box.
241-ER-151*	Contents of Pipeline and/or Source Tank During Transfer	NA	NA	NA	NA	NA	NA	NA	NA	See transfer line Table 7.
241-ER-151*	Contents of Sump or Encasement	None	NA	NA	NA	NA	NA	NA	NA	No sumps associated with diversion box. See transfer line Table 7 for encasement discussion.
241-ER-151	Contamination in Pit or Box	Nozzle Pit	Residual*	15,750 gal (6' x 27' x 13')	NA	Residue*	NA	No	NA	*Diversion box contents drain to catch tank 241-ER-311. Diversion box transports flush water mixed with waste from SY farm, B plant, and B farm.
241-ER-151	Contamination in Pit or Box	Pipe Pit	Residual*	14,300 gal (28'-10" x 9'-6" x 7')	NA	Residue*	NA	No	NA	*Diversion box contents drain to catch tank 241-ER-311. Diversion box transports flush water mixed with waste from SY farm, B plant, and B farm.
241-ER-151	Contamination in Pit or Box	Jumper Storage Pit	Residual*	6600 gal (6' x 11'-4.5" x 13')	NA	Residue*	NA	No	NA	*Diversion box contents drain to catch tank 241-ER-311. Diversion box transports flush water mixed with waste from SY farm, B plant, and B farm.

Table D3.1-1. Material at Risk Table.[1] (94 sheets)

Field Name	MAR-Subject	MAR-Description	MAR-Classification	Capacity	Material Type	Physical Form	Volume or Activity	Transient	Quantity	Comments
241-ER-151*	SARA 313 Materials	None	NA	NA	NA	NA	NA	NA	NA	NA
241-ER-151*	Other	None	NA	NA	NA	NA	NA	NA	NA	NA
241-ER-152*	Tank Contents	NA	NA	NA	NA	NA	NA	NA	NA	No tanks within the diversion box.
241-ER-152*	Tank Headspace	NA	NA	NA	NA	NA	NA	NA	NA	No tanks within the diversion box.
241-ER-152*	Rail or Truck Tanker Contents	None	NA	NA	NA	NA	NA	NA	NA	No rail or truck tankers associated with diversion box.
241-ER-152*	Contamination on Vehicle	None	NA	NA	NA	NA	NA	NA	NA	No contaminated vehicles associated with diversion box.
241-ER-152*	Contamination on Equipment or Tools	None	NA	NA	NA	NA	NA	NA	NA	No contaminated tools or equipment associated with diversion box.
241-ER-152*	Ventilation Filter Contents	None	NA	NA	NA	NA	NA	NA	NA	No ventilation associated with diversion box.
241-ER-152*	Contamination In Ventilation System	De-entrainer	NA	NA	NA	NA	NA	NA	NA	No ventilation associated with diversion box.
241-ER-152*	Contamination In Ventilation System	Seal loop	NA	NA	NA	NA	NA	NA	NA	No ventilation associated with diversion box.
241-ER-152	Contents of Pipeline and/or Source Tank During Transfer	NA	NA	NA	NA	NA	NA	NA	NA	See transfer line Table 7.
241-ER-152	Contents of Sump or Encasement	Diversion box sump	Residual contamination*	25 gal (18" x 18" x 18")	NA	Residue*	NA	No	NA	*Diversion box drains to 241-ER-311 catch tank. See transfer line Table 7 for encasement discussion.
241-ER-152	Contamination in Pit or Box	Diversion box	Residual contamination*	9850 gal (10' x 10' x 13'-2")	NA	Residue*	NA	No	NA	*Diversion box drains to 241-ER-311 catch tank. Diversion box transports flush water mixed with wastes from SY farm, B plant, and B farm.
241-ER-152*	SARA 313 Materials	None	NA	NA	NA	NA	NA	NA	NA	NA
241-ER-152*	Other	None	NA	NA	NA	NA	NA	NA	NA	NA
241-ER-153*	Tank Contents	NA	NA	NA	NA	NA	NA	NA	NA	No tanks within the diversion box.

Table D3.1-1. Material at Risk Table.[1] (94 sheets)

Field Name	MAR-Subject	MAR-Description	MAR-Classification	Capacity	Material Type	Physical Form	Volume or Activity	Transient	Quantity	Comments
241-ER-153*	Tank Headspace	NA	NA	NA	NA	NA	NA	NA	NA	No tanks within the diversion box.
241-ER-153*	Rail or Truck Tanker Contents	None	NA	NA	NA	NA	NA	NA	NA	No rail or truck tankers associated with diversion box.
241-ER-153*	Contamination on Vehicle	None	NA	NA	NA	NA	NA	NA	NA	No contaminated vehicles associated with diversion box.
241-ER-153*	Contamination on Equipment or Tools	None	NA	NA	NA	NA	NA	NA	NA	No contaminated tools or equipment associated with diversion box.
241-ER-153*	Ventilation Filter Contents	None	NA	NA	NA	NA	NA	NA	NA	No ventilation associated with diversion box.
241-ER-153*	Contamination In Ventilation System	De-entrainer	NA	NA	NA	NA	NA	NA	NA	No ventilation associated with diversion box.
241-ER-153*	Contamination In Ventilation System	Seal loop	NA	NA	NA	NA	NA	NA	NA	No ventilation associated with diversion box.
241-ER-153	Contents of Pipeline and/or Source Tank During Transfer	NA	NA	NA	NA	NA	NA	NA	NA	See transfer line Table 7.
241-ER-153	Contents of Sump or Encasement	Diversion box sump	Residual contamination*	25 gal (18" x 18" x 18")	NA	Residue*	NA	No	NA	*Diversion box drains to 244-A lift station. Diversion box transfers flush water and leaks from SY farm, B plant, B farm, and C farm. See transfer line Table 7 for encasement discussion.
241-ER-153	Contamination in Pit or Box	Diversion box	Residual contamination*	11,400 gal (13' x 13' x 9')	NA	Residue*	NA	No	NA	*Diversion box drains to 244-A lift station. Diversion box transfers flush water and leaks from SY farm, B plant, B farm, and C farm.
241-ER-153*	SARA 313 Materials	None	NA	NA	NA	NA	NA	NA	NA	NA
241-ER-153*	Other	None	NA	NA	NA	NA	NA	NA	NA	NA

Table D3.1-1. Material at Risk Table.[1] (94 sheets)

Field Name	MAR-Subject	MAR-Description	MAR-Classification	Capacity	Material Type	Physical Form	Volume or Activity	Transient	Quantity	Comments
241-ER-311A	Tank Contents	241-ER-311	Process condensate and flush water from diversion box 241-ER-151 and 241-ER-152 (from B Plant and B tank farm)*	22,000 gal (10' diameter x 37' long)	NA	Liquid	4911 gal	No	NA	*Exact composition unknown
241-ER-311A	Tank Headspace	241-ER-311	NA	NA	NA	Vapor	NA	No	NA	No data available.
241-ER-311*	Rail or Truck Tanker Contents	None	NA	NA	NA	NA	NA	NA	NA	No rail or truck tankers associated with catch tank.
241-ER-311*	Contamination on Vehicle	None	NA	NA	NA	NA	NA	NA	NA	No contaminated vehicles associated with catch tank.
241-ER-311*	Contamination on Equipment or Tools	None	NA	NA	NA	NA	NA	NA	NA	No contaminated tools associated with catch tank.
241-ER-311*	Ventilation Filter Contents	None	NA	NA	NA	NA	NA	NA	NA	No ventilation associated with catch tank.
241-ER-311*	Contamination In Ventilation System	De-entrainer	NA	NA	NA	NA	NA	NA	NA	No ventilation associated with catch tank.
241-ER-311*	Contamination In Ventilation System	Seal loop	NA	NA	NA	NA	NA	NA	NA	No ventilation associated with catch tank.
241-ER-311*	Contents of Pipeline and/or Source Tank During Transfer	NA	NA	NA	NA	NA	NA	NA	NA	See transfer line Table 7.
241-ER-311*	Contents of Sump or Encasement	None	NA	NA	NA	NA	NA	NA	NA	No sump associated with catch tank. See transfer line study for encasement discussion.
241-ER-311	Contamination in Pit or Box	Pump pit	Residual contamination*	660 gal (5' diameter x 4'-6") [H-2-71643]	NA	Residue*	NA	No	NA	*Any liquid will drain to catch tank.
241-ER-311*	SARA 313 Materials	None	NA	NA	NA	NA	NA	NA	NA	NA
241-ER-311*	Other	None	NA	NA	NA	NA	NA	NA	NA	NA

Table D3.1-1. Material at Risk Table.[1] (94 sheets)

Field Name	MAR-Subject	MAR-Description	MAR-Classification	Capacity	Material Type	Physical Form	Volume or Activity	Transient	Quantity	Comments
241-A-101	Tank Contents	A-101	DSSF	1 Mgal	Sludge Saltcake	Solid Solid	3 Kgal 950 Kgal - saltcake contains an estimated 390 Kgal of pumpable liquid.	No	NA	A-101 is a watch list tank (hydrogen/flammable gas, organics). A-101 will be pumped pending completion of the LANL Safety Assessment.
241-A-102	Tank Contents	A-102	DSSF	1 Mgal	Supernate Sludge Saltcake	Liquid Solid Solid	4 Kgal 15 Kgal 22 Kgal	No	NA	Interim stabilized.
241-A-103	Tank Contents	A-103	DSSF	1 Mgal	Supernate Sludge	Liquid Solid	5 Kgal 366 Kgal	No	NA	Recommended to be added as a watchlist tank for hydrogen/flammable gas. Assumed leaker, interim stabilized.
241-A-104	Tank Contents	A-104	NCPLX	1 Mgal	Sludge	Solid	28 Kgal	No	NA	Assumed leaker, interim stabilized.
241-A-105	Tank Contents	A-105	NCPLX	1 Mgal	Sludge	Solid	19 Kgal	No	NA	Assumed leaker, interim stabilized.
241-A-106	Tank Contents	A-106	CP	1 Mgal	Sludge	Solid	125 Kgal	No	NA	Interim stabilized.
241-A-101	Tank Headspace	A-101	NA	NA	NA	Vapor	117 M3, total NH3 67 g	No	NA	NA
241-A-102	Tank Headspace	A-102	NA	NA	NA	Vapor	4629 m3, no NH3 present	No	NA	NA
241-A-103	Tank Headspace	A-103	NA	NA	NA	Vapor	3380 m3, no NH3 present	No	NA	NA
241-A-104	Tank Headspace	A-104	NA	NA	NA	Vapor	4678 m3, no NH3 present	No	NA	NA
241-A-105	Tank Headspace	A-105	NA	NA	NA	Vapor	4712 m3, no NH3 present	No	NA	NA
241-A-106	Tank Headspace	A-106	NA	NA	NA	Vapor	4311 m3, no NH3 present	No	NA	NA
241-A*	Rail or Truck Tanker Contents	NA	NA	NA	NA	NA	NA	NA	NA	There are no rails or truck tankers in A Farm.
241-A*	Contamination on Vehicle	NA	NA	NA	NA	NA	NA	NA	NA	There are no vehicles permanently stationed in A Farm.
241-A*	Contamination on Equipment or Tools	NA	NA	NA	NA	NA	NA	NA	NA	There are no tools in A Farm at this time.
241-A*	Ventilation Filter Contents	Primary	NA	NA	NA	NA	NA	NA	NA	NA
241-A*	Ventilation Filter Contents	Annulus	NA	NA	NA	NA	NA	NA	NA	Single shell tanks have no annulus.

Table D3.1-1. Material at Risk Table.[1] (94 sheets)

Field Name	MAR-Subject	MAR-Description	MAR-Classification	Capacity	Material Type	Physical Form	Volume or Activity	Transient	Quantity	Comments
241-A*	Ventilation Filter Contents	Breather	NA	1 R/hr at six inches**	NA	Particu-late	<100 mR/hr.*	Yes, filters disposed of in accord with EP-0063, Rev 4 (9/93)	NA	One breather per tank. *Not identified by East Tank Farms High/Very High Radiation Area Log as a high rad area. **SAR for DSTs indicates 200 mR/hr limit on HEPA filters through administrative controls. No reference found that indicates this limit applies to SSTs. Filters are tested annually for efficiency and replaced if they fail.
241-A-702	Contamination In Ventilation System	De-entrainer	Process condensate	NA	NA	Liquid	Residual	NA	NA	NA
241-A-702	Contamination In Ventilation System	Seal loop	Silicon based oil	<1 gallon	NA	Liquid	Residual	NA	NA	One seal loop per breather filter.
241-A*	Contents of Pipeline and/or Source Tank During Transfer	NA	NA	NA	NA	NA	NA	NA	NA	Refer to transfer line Table 7.
241-A*	Contents of Sump or Encasement	Warm water sump	Residual contamination	7.2 Kgal	NA	Residue	Unknown	No	1 sump	Drawing identifies as "Warm water sump".
241-A-01A	Contamination in Pit or Box	Central pump pit A-101	Residual contamination	4.9 Kgal	NA	Residue	Unknown	No	1 central pump pit	NA
241-A-01H	Contamination in Pit or Box	Distributor pit 01H	Residual contamination	1.3 Kgal	NA	Residue	Unknown	No	1 distributor pit	Distributor pit was to support future saltwell jet pumping of 241-A-101.
241-A-A	Contamination in Pit or Box	Valve pit A-A	Residual contamination	4.3 Kgal	NA	Residue	Unknown	No	1 valve pit	NA
241-A-B	Contamination in Pit or Box	Valve pit A-B	Residual contamination	4.3 Kgal	NA	Residue	Unknown	No	1 valve pit	NA
241-A-151	Contamination in Pit or Box	Diversion box A-151	Residual contamination	64.1 Kgal	NA	Residue	Unknown	No	1 diversion box	NA
241-A-152	Contamination in Pit or Box	Diversion box A-152	Residual contamination	78.9 Kgal	NA	Residue	Unknown	No	1 diversion box	NA
241-A-401	Contamination in Pit or Box	Diverter caisson A-401	Residual contamination	2.6 Kgal	NA	Residue	Unknown	No	1 caisson	NA

Table D3.1-1. Material at Risk Table.[1] (94 sheets)

Field Name	MAR-Subject	MAR-Description	MAR-Classification	Capacity	Material Type	Physical Form	Volume or Activity	Transient	Quantity	Comments
241-A-501	Contamination in Pit or Box	Control valve pit A-501	Residual contamination	See comment	NA	Residue	Unknown	No	1 valve pit	This is no pit or cover block, consists of a room w/ a door.
241-F-562	Contamination in Pit or Box	Valve pit F-562	Residual contamination	1.9 Kgal	NA	Residue	Unknown	No	1 valve pit	NA
241-A-COB	Contamination in Pit or Box	Clean-out boxes	Residual contamination	.08 Kgal	NA	Residue	Unknown	No	11 COBs	NA
241-AX-80	Contamination in Pit or Box	Service pit AX-80	Raw water	2.1 Kgal	NA	Residue	Unknown	No	1 service pit	NA
241-A-350	Contamination in Pit or Box	Lift station A-350 (catch tank)	Residual contamination	6.3 Kgal	NA	Residue	Unknown	No	1 lift station	NA
244-A	Contamination in Pit or Box	Lift station 244-A	Residual contamination	25 Kgal	NA	Residue	Unknown	No	1 lift station	NA
241-A*	Contamination in Pit or Box	Lift station (no ID)	Residual contamination	Unknown	NA	Residue	Unknown	No	1 lift station	This facility is located outside of the fence NE of A Farm.
241-A-302-A	Contamination in Pit or Box	Catch tank A-302-A	Residual contamination	7.9 Kgal	NA	Residue	Unknown	No	1 catch tank	NA
241-A-417	Contamination in Pit or Box	Catch tank A-417	Residual contamination	48.5 Kgal	NA	Residue	Unknown	No	1 catch tank	NA
241-F-505	Contamination in Pit or Box	Diverter caisson F505	Residual contamination	.68 Kgal	NA	Residue	Unknown	No	1 caisson	This facility is located outside of the fence NE of A Farm.
16-A-08	Contamination in Pit or Box	Crib, sample pit and weir pit 216-A-08	Residual contamination	Control structure #1: 9 Kgal, control structure #2: 19 Kgal, sampler pit #1: 3.8 Kgal, sampler pit #2: 8 Kgal	NA	Residue	Unknown	No	1 crib, 2 control structures, 2 sampler pits	Facilities are associated with crib 216-A-08. The crib of this facility received 1,150 M liters of condensate and cooling water from 241-A, AX, AY and AZ farms, and 241-A-431. This facility is located outside of the fence NE of A Farm.
241-F-561	Contamination in Pit or Box	Raw water valve pit F-561 (part of 216-A-08)	Raw water	2.4 Kgal	NA	Residue	Unknown	No	1 RW pit	This facility is located outside of the fence NE of A Farm.

Table D3.1-1. Material at Risk Table.[1] (94 sheets)

Field Name	MAR-Subject	MAR-Description	MAR-Classification	Capacity	Material Type	Physical Form	Volume or Activity	Transient	Quantity	Comments
216-A-28	Contamination in Pit or Box	Crib 216-A-28	Residual contamination	NA	NA	Residue	Unknown	No	1 crib	This crib received 30 K liters of liquid waste from enclosure sumps and heating coil condensate from 231-A. The waste is low salt and neutral/basic. This crib is located SW of A Farm.
216-A-30	Contamination in Pit or Box	Crib 216-A-30	Residual contamination	NA	NA	Residue	Unknown	No	1 crib	This crib received 7,110 M liters of steam condensate, floor drainage, and storage basin overflow waste from 202-A. This crib is located SE of A Farm.
216-A-36A	Contamination in Pit or Box	Crib 216-A-36A	Residual contamination	NA	NA	Residue	Unknown	No	1 crib	This crib received 1,070 K liters of ammonia scrubber waste from 202-A. The waste is low salt and neutral/basic. This crib is located SW of A Farm.
216-A-36B	Contamination in Pit or Box	Crib 216-A-36B	Residual contamination	NA	NA	Residue	Unknown	No	1 crib	This crib received 317 M liters of ammonia scrubber waste from 202-A. The waste is low salt and neutral/basic. This crib is located SW of A Farm.
216-A-37-1	Contamination in Pit or Box	Crib 216-A-37-1	Residual contamination	NA	NA	Residue	Unknown	No	1 crib	This crib received 377 M liters of process condensate from 242-A. The condensate was determined to be mixed waste due to halogenated and nonhalogenated solvents and the toxicity of ammonia. This crib is located SE of A Farm.
216-A-37-2	Contamination in Pit or Box	Crib 216-37-2	Residual contamination	NA	NA	Residue	Unknown	No	1 crib	Crib permanently isolated by filling the distribution box with concrete. The site received steam condensate from PUREX.

Table D3.1-1. Material at Risk Table.[1] (94 sheets)

Field Name	MAR-Subject	MAR-Description	MAR-Classification	Capacity	Material Type	Physical Form	Volume or Activity	Transient	Quantity	Comments
216-A-45	Contamination in Pit or Box	Crib 216-A-45	Residual contamination	NA	NA	Residue	Unknown	No	1 crib	This crib received 103 M liters of process condensate from 202-A. This crib is located SW of A Farm.
244-A*	SARA 313 Materials	Change trailer for 244-A	10 % Methane/ 90% Argon	480 f3 / bottle	NA	Gas	NA	Yes	2 bottles	PCM1B support. The change trailer is located at the 244-A facility.
241-A*	SARA 313 Materials	Fuel storage tank	Unknown	Unknown	NA	Unknown	Unknown	No	Unknown	This facility is located underground outside of the fence NE of A Farm.
241-A*	Other	Hazardous material storage	See comment	NA	See comment	Solid	Did not look in building as it was locked	Yes	Unknown	This facility is located outside of the fence NE of A Farm, and is locked and controlled by HPTs.
241-A-401	Other	Condenser building A-401	Low level waste	NA	NA	Solid	Low level	No	Isolated old condensers	This facility is located outside of the fence NE of A Farm, and is locked and controlled by HPTs.
241-A*	Other	Contaminated burial boxes	Low level waste	NA	NA	Solid	Low level	Yes	2 boxes	NA
241-A-702	Other	Ventilation building 241-A-702	Low level waste	NA	NA	Residue	Low level	No	1 building	NA
241-A*	Other	Leak detection lateral buildings 103A, 105A, 106A	Low level waste	NA	NA	Residue	Low level	No	3 buildings	NA
241-A*	Other	Ion exchange facility	Low level waste	NA	NA	Residue	Low level	No	1 facility	Inactive.
241-A-831	Other	Old ventilation storage building A-831	Low level waste	NA	NA	Residue	Low level	No	1 building	NA
A Satellite Accumulation Area	Other	Satellite accumulation area for 244-A	RCRA mixed waste	6-55 gallon mixed waste drums (maximum)	Soil, HEPA filters, misc. RMW wastes	Solid	Low level (less than class C)	Yes	6-55 gal drums max capacity	NA
241-A*	Other	Oil	Compressor oil	2 quarts	NA	Liquid	2 quarts	Yes	1 container	Located in compressor building.
241-A*	Other	Heavy duty antifreeze	For compressors	55 gallon drum	NA	Liquid	55 gal drum	Yes	1 drum	Located in compressor building.

Table D3.1-1. Material at Risk Table.[1] (94 sheets)

Field Name	MAR-Subject	MAR-Description	MAR-Classification	Capacity	Material Type	Physical Form	Volume or Activity	Transient	Quantity	Comments
241-AN-101	Tank Contents	AN-101	DN	1.16 Mgal	Supernate	Liquid	1080 Kgal	No	NA	AN-101 will be pumped to 105-AP.
241-AN-102	Tank Contents	AN-102	CC	1.16 Mgal	Supernate Solid	Liquid Unknown	993 Kgal 89 Kgal	No	NA	NA
241-AN-103	Tank Contents	AN-103	DSS	1.16 Mgal	DSS	Liquid	955 Kgal	No	NA	NA
241-AN-104	Tank Contents	AN-104	DSSF	1.16 Mgal	Slurry	Liquid	1060 Kgal	No	NA	NA
241-AN-105	Tank Contents	AN-105	DSSF	1.16 Mgal	Slurry	Liquid	1128 Kgal	No	NA	NA
241-AN-106	Tank Contents	AN-106	DSSF	1.16 Mgal	Supernate Solid	Liquid Solid	400 Kgal 17 Kgal	No	NA	NA
241-AN-107	Tank Contents	AN-107	CC	1.16 Mgal	Supernate Solid	Liquid Solid	923 Kgal 134 Kgal	No	NA	NA
241-AN-101	Tank Headspace	AN-101	NA	NA	NA	Vapor	1235 m3, no NH3 present	No	NA	NA
241-AN-102	Tank Headspace	AN-102	NA	NA	NA	Vapor	1228 m3, no NH3 present	No	NA	NA
241-AN-103	Tank Headspace	AN-103	NA	NA	NA	Vapor	1708 m3, no NH3 present	No	NA	NA
241-AN-104	Tank Headspace	AN-104	NA	NA	NA	Vapor	1311 m3, no NH3 present	No	NA	NA
241-AN-105	Tank Headspace	AN-105	NA	NA	NA	Vapor	1053 m3, no NH3 present	No	NA	NA
241-AN-106	Tank Headspace	AN-106	NA	NA	NA	Vapor	3745 m3, no NH3 present	No	NA	NA
241-AN-107	Tank Headspace	AN-107	NA	NA	NA	Vapor	1322 m3, no NH3 present	No	NA	NA
241-AN*	Rail or Truck Tanker Contents	NA	NA	NA	NA	NA	NA	NA	NA	There are no rails or trucks in AN Farm.
241-AN*	Contamination on Vehicle	NA	NA	NA	NA	NA	NA	NA	NA	There are no vehicles in AN Farm.
241-AN*	Contamination on Equipment or Tools	NA	NA	NA	NA	NA	NA	NA	NA	NA
241-AN	Ventilation Filter Contents	Primary	NA	200 mR/hr maximum for all HEPA filters	NA	Particu-late	<200 mR/hr	Yes - disposal in accord w/ WHC-EP-0063-4 (9/93)	NA	HEPA filters monitored for DP drop/loading in accordance w/ manufacturer's spec.

Table D3.1-1. Material at Risk Table.[1] (94 sheets)

Field Name	MAR-Subject	MAR-Description	MAR-Classification	Capacity	Material Type	Physical Form	Volume or Activity	Transient	Quantity	Comments
241-AN	Ventilation Filter Contents	Annulus	NA	200 mR/hr maximum for all HEPA filters	NA	Particu-late	<200 mR/hr	Yes - disposal in accord w/ WHC-EP-0063-4 (9/93)	NA	HEPA filters monitored for DP drop/loading in accordance w/ manufacturer's spec.
241-AN*	Ventilation Filter Contents	Breather	NA	NA	NA	NA	NA	NA	NA	There are no breathers on AN tanks.
241-AN	Contamination In Ventilation System	Demisters	Process condensate	NA	NA	Liquid	Residual	NA	NA	NA
241-AN	Contamination In Ventilation System	Seal loop	Process condensate	NA	NA	Liquid	Residual	NA	NA	NA
241-AN	Contents of Pipeline and/or Source Tank During Transfer	NA	NA	NA	NA	NA	NA	NA	NA	Refer to transfer line Table 7.
241-AN	Contents of Sump or Encasement	NA	NA	NA	NA	NA	NA	NA	NA	Refer to transfer line Table 7.
241-AN-01A-07A	Contamination in Pit or Box	Central pump pits: AN 01A-07A	Residual contamination	3.8 K gal each	NA	Residue	Unknown	No	7 pits	NA
241-AN-01B-07B	Contamination in Pit or Box	Annulus pump pits: AN 01B-07B	Residual contamination	1.7 K gal each	NA	Residue	Unknown	No	7 pits	NA
241-AN-01C-07C	Contamination in Pit or Box	Leak detection pump pits: AN 01C-07C	Residual contamination	1.7 K gal each	NA	Residue	Unknown	No	7 pits	NA
241-AN-01D	Contamination in Pit or Box	Condensate pit AN 01D	Residual contamination	2.4 K gal each	NA	Residue	Unknown	No	2 pits	NA
241-AN-01E	Contamination in Pit or Box	Supernate receiver pit AN 01E	Residual contamination	1.4 K gal	NA	Residue	Unknown	No	1 pit	NA
241-AN	Contamination in Pit or Box	AN tank pit	Residual contamination	1.9 K gal	NA	Residue	Unknown	No	1 pits	Exists on drawing. Not found in the field.
241-AN-A	Contamination in Pit or Box	Valve pit AN-A	Residual contamination	5.4 K gal	NA	Residue	Unknown	No	1 valve pit	NA
241-AN-B	Contamination in Pit or Box	Valve pit AN-B	Residual contamination	5.4 K gal	NA	Residue	Unknown	No	1 valve pit	NA
241-AN-FP	Contamination in Pit or Box	Flush pit	Residual contamination	1 K gal	NA	Residue	Unknown	No	1 flush pit	NA

Table D3.1-1. Material at Risk Table.[1] (94 sheets)

Field Name	MAR-Subject	MAR-Description	MAR-Classification	Capacity	Material Type	Physical Form	Volume or Activity	Transient	Quantity	Comments
241-AN-273	Contamination in Pit or Box	Service pit	Raw Water	2.4 K gal	NA	Residue	No	No	1 service pit	NA
COB-AN-1	Contamination in Pit or Box	Clean out box AN-1	Residual contamination	.047 K gal each	NA	Residue	Unknown	No	9 COBs	NA
COB-AN-2	Contamination in Pit or Box	Clean out box AN-2	Residual contamination	.047 K gal each	NA	Residue	Unknown	No	9 COBs	NA
COB-AN-3	Contamination in Pit or Box	Clean out box AN-3	Residual contamination	.047 K gal each	NA	Residue	Unknown	No	9 COBs	NA
COB-AN-4	Contamination in Pit or Box	Clean out box AN-4	Residual contamination	.047 K gal each	NA	Residue	Unknown	No	9 COBs	NA
COB-AN-5	Contamination in Pit or Box	Clean out box AN-5	Residual contamination	.047 K gal each	NA	Residue	Unknown	No	9 COBs	NA
COB-AN-6	Contamination in Pit or Box	Clean out box AN-6	Residual contamination	.047 K gal each	NA	Residue	Unknown	No	9 COBs	NA
COB-AN-7	Contamination in Pit or Box	Clean out box AN-7	Residual contamination	.047 K gal each	NA	Residue	Unknown	No	9 COBs	NA
COB-AN-8	Contamination in Pit or Box	Clean out box AN-8	Residual contamination	.047 K gal each	NA	Residue	Unknown	No	9 COBs	NA
241-AN	Contamination in Pit or Box	Vent pits AN #1,2,3,4	Residual contamination	.6 K gal each	NA	Residue	Unknown	No	4 vent pits	NA
241-AN	Contamination in Pit or Box	Demister pit	Residual contamination	1.9 K gal	NA	Residue	Unknown	No	demister pit	NA
241-AN	SARA 313 Materials	Outside change trailer	10% methane/ 90% argon	480 f3	NA	Gas	NA	Yes	2 bottles	Bottles support PCM1B personnel rad monitor.
241-AN	Other	Caustic addition building and skid	See comment	1 unit	NA	NA	NA	NA	NA	No caustic present at this time.
AN Satellite Accumulation Area	Other	Satellite accumulation area	RCRA mixed waste	6-55 gal mixed waste drums (maximum)	Soil, paint waste, tank contacted, mask cartridges, HEPA filters, misc. RMW wastes	Solid	Low level (less than class C)	Yes	6-55 gal drums max capacity for SAA	Inventories removed when filled, transported to 209-E 90 day storage facility.

Table D3.1-1. Material at Risk Table.[1] (94 sheets)

Field Name	MAR-Subject	MAR-Description	MAR-Classification	Capacity	Material Type	Physical Form	Volume or Activity	Transient	Quantity	Comments
241-AN	Other	Buildings	Low level waste	2 small buildings roped off for rad buffer area	SWPs, other low level waste	Solid	Low level	Yes	Did Not look in buildings as they were roped off	2 small buildings near change trailer.
241-AP-101	Tank Contents	241-AP-101	DSSF	1.16 Mgal	Supernate	Liquid	735 Kgal	No	NA	NA
241-AP-102	Tank Contents	241-AP-102	CP	1.16 Mgal	Supernate	Liquid	1098 Kgal	No	NA	NA
241-AP-103	Tank Contents	241-AP-103	DN	1.16 Mgal	Supernate	Liquid	25 Kgal	No	NA	NA
241-AP-104	Tank Contents	241-AP-104	DN	1.16 Mgal	Supernate	Liquid	1123 Kgal	No	NA	NA
241-AP-105	Tank Contents	241-AP-105	DSSF	1.16 Mgal	Sludge	Solid	155 Kgal	No	NA	NA
241-AP-106	Tank Contents	241-AP-106	DN	1.16 Mgal	Supernate	Liquid	107 Kgal	No	NA	NA
241-AP-107	Tank Contents	241-AP-107	DN	1.16 Mgal	Supernate	Liquid	25 Kgal	No	NA	NA
241-AP-108	Tank Contents	241-AP-108	DN	1.16 Mgal	Supernate	Liquid	29 Kgal	No	NA	NA
241-AP-101	Tank Headspace	241-AP-101	NA	NA	NA	Vapor	2533 cubic meters, no NH3 present	No	NA	NA
241-AP-102	Tank Headspace	241-AP-102	NA	NA	NA	Vapor	1167 cubic meters, no NH3 present	No	NA	NA
241-AP-103	Tank Headspace	241-AP-103	NA	NA	NA	Vapor	5228 cubic meters, no NH3 present	No	NA	NA
241-AP-104	Tank Headspace	241-AP-104	NA	NA	NA	Vapor	2166 cubic meters, no NH3 present	No	NA	NA
241-AP-105	Tank Headspace	241-AP-105	NA	NA	NA	Vapor	4740 cubic meters, no NH3 present	No	NA	NA
241-AP-106	Tank Headspace	241-AP-106	NA	NA	NA	Vapor	4918 cubic meters, no NH3 present	No	NA	NA
241-AP-107	Tank Headspace	241-AP-107	NA	NA	NA	Vapor	5228 cubic meters, no NH3 present	No	NA	NA
241-AP-108	Tank Headspace	241-AP-108	NA	NA	NA	Vapor	5217 cubic meters, no NH3 present	No	NA	NA
241-AP*	Rail or Truck Tanker Contents	None	NA	NA	NA	NA	NA	NA	NA	No rail or truck tankers at AP location.

Table D3.1-1. Material at Risk Table.[1] (94 sheets)

Field Name	MAR-Subject	MAR-Description	MAR-Classification	Capacity	Material Type	Physical Form	Volume or Activity	Transient	Quantity	Comments
241-AP*	Contamination on Vehicle	Contaminated vehicles	Residual surface contamination on farm vehicles	Surface residual	Residual	NA	Unknown	NA	NA	Contaminated vehicle housed in storage area (outside of AP farm fence).
241-AP*	Contamination on Equipment or Tools	None	NA	NA	NA	NA	NA	NA	NA	Tool crib located in AP farm contained misc. small tools, no contamination detected on rad survey.
241-AP	Ventilation Filter Contents	Primary	NA	200 mR/hr maximum for all HEPA filters	NA	Particu-late	Unknown	Yes - disposal in accord w/ WHC-EP-0063-4 (9/93)	NA	HEPA filters monitored for DP drop/loading in accordance w/manufacturers specs.
241-AP	Ventilation Filter Contents	Annulus	NA	200 mR/hr maximum for all HEPA filters	NA	Particu-late	Unknown	Yes - Disposal in accord w/ WHC-EP-0063-4 (9/93)	NA	HEPA filters monitored for DP drop/loading in accordance w/ manufactures specs.
241-AP*	Ventilation Filter Contents	Breather	NA	NA	NA	NA	NA	NA	NA	NA
241-AP*	Contamination In Ventilation System	De-entrainer	Process condensate	NA	NA	Liquid	Residual	NA	NA	NA
241-AP*	Contamination In Ventilation System	Seal loop	Process condensate	NA	NA	Liquid	Residual	NA	NA	NA
241-AP*	Contents of Pipeline and/or Source Tank During Transfer	NA	NA	NA	NA	NA	NA	NA	NA	Refer to transfer line Table 7.
241-AP-273	Contents of Sump Contents of Pipeline and/or Source Tank During Transfer	Service pit sump	Raw water	NA	NA	Liquid	NA	NA	NA	No standing water noted during site walkdown.
241-AP	Contamination in Pit or Box	Process pits	Residual contamination	NA	NA	Residue	Unknown	No	NA	No standing water noted.
241-AP-A	Contamination in Pit or Box	241 AP valve pit	Residual contamination	~21.5 K gal	NA	Residue	Unknown	No	1 central valve pit to AP	NA

Table D3.1-1. Material at Risk Table.[1] (94 sheets)

Field Name	MAR-Subject	MAR-Description	MAR-Classification	Capacity	Material Type	Physical Form	Volume or Activity	Transient	Quantity	Comments
241-AP-01A	Contamination in Pit or Box	Central pump pits 101	Residual contamination	~5.4 K gal	NA	Residue	Unknown	No	8 pits total (1 pit per tank)	NA
241-AP-02A	Contamination in Pit or Box	Central pump pits 102	Residual contamination	~5.4 K gal	NA	Residue	Unknown	No	8 pit total (1 pit per tank)	NA
241-AP-03A	Contamination in Pit or Box	Central pump pits 103	Residual contamination	~5.4 K gal	NA	Residue	Unknown	No	8 pit total (1 pit per tank)	NA
241-AP-04A	Contamination in Pit or Box	Central pump pits 104	Residual contamination	~5.4 K gal	NA	Residue	Unknown	No	8 pit total (1 pit per tank)	NA
241-AP-05A	Contamination in Pit or Box	Central pump pits 105	Residual contamination	~5.4 K gal	NA	Residue	Unknown	No	8 pit total (1 pit per tank)	NA
241-AP-06A	Contamination in Pit or Box	Central pump pits 106	Residual contamination	~5.4 K gal	NA	Residue	Unknown	No	8 pit total (1 pit per tank)	NA
241-AP-07A	Contamination in Pit or Box	Central pump pits 107	Residual contamination	~5.4 K gal	NA	Residue	Unknown	No	8 pit total (1 pit per tank)	NA
241-AP-08A	Contamination in Pit or Box	Central pump pits 108	Residual contamination	~5.4 K gal	NA	Residue	Unknown	No	8 pit total (1 pit per tank)	NA
241-AP*	SARA 313 Materials	Flammable storage cabinet - compressor bldg.	NA	NA	NA	Liquids	Unknown	Yes	NA	Standard small quantity classified materials (paints, cleaning solvents).
241-AP*	SARA 313 Materials	Flammable storage cabinet - near change trailer	NA	NA	NA	Liquids	Unknown	Yes	NA	Standard small quantity classified materials (paints, cleaning solvents).
241-AP*	Other	Bottle storage area	Nitrogen	28 bottles (max)	NA	Gas	480 ft3	Yes	28 bottles	Bottle storage area located adjacent to AP instrument Bld.

Table D3.1-1. Material at Risk Table.[1] (94 sheets)

Field Name	MAR-Subject	MAR-Description	MAR-Classification	Capacity	Material Type	Physical Form	Volume or Activity	Transient	Quantity	Comments
241-AP*	Other	Bottle storage area	Hydrogen	3 bottles	NA	Gas	480 ft3	Yes	1 bottle	Bottle storage area located adjacent to AP instrument Bld.
241-AP*	Other	Bottle storage area	H2 / He Mix	14 bottles	NA	Gas	480 ft3	Yes	4 bottles	Bottle storage area located adjacent to AP instrument Bld.
241-AP*	Other	Bottle storage area	10% methane / 90% argon	14 bottles	NA	Gas	480 ft3	Yes	9 bottles	Bottle storage area located adjacent to AP instrument Bld.
241-AP*	Other	Outside change trailer	10% methane / 90% argon	2 bottles	NA	Gas	480 ft3	Yes	2 bottles	Bottles support PCM1B personnel rad monitor.
AP Satellite Accumulation Area	Other	Satellite accumulation area	RCRA mixed wastes	6-55 gallon mixed waste drums (maximum)	Soil, paint waste, tank contacted, mask cartridges, HEPA filters, misc. RMW wastes	Solid	Low level (less than class C)	Yes	6-55 gal drums max capacity for each satellite enclosure	Inventories removed when filled, transported to 209-E 90 day storage facility.
241-AW-101	Tank Contents	241-AW-101	DSSF	1.16 Mgal	Supernate	Liquid	1043 kgal	No	NA	NA
241-AW-101	Tank Contents	241-AW-101	DSSF	NA	Saltcake	Solid	84 kgal	No	NA	NA
241-AW-102	Tank Contents	241-AW-102	DN	1.16 Mgal	Supernate	Liquid	39 kgal	No	NA	NA
241-AW-102	Tank Contents	241-AW-102	DN	NA	Saltcake	Solid	55 kgal	No	NA	NA
241-AW-103	Tank Contents	241-AW-103	DN/PD	1.16 Mgal	Supernate	Liquid	149 kgal	No	NA	NA
241-AW-103	Tank Contents	241-AW-103	DN/PD	NA	Saltcake	Solid	363 kgal	No	NA	NA
241-AW-104	Tank Contents	241-AW-104	DN	1.16 Mgal	Supernate	Liquid	834 kgal	No	NA	NA
241-AW-104	Tank Contents	241-AW-104	DN	NA	Saltcake	Solid	290 kgal	No	NA	NA
241-AW-105	Tank Contents	241-AW-105	DN/PD	1.16 Mgal	Supernate	Liquid	136 kgal	No	NA	NA
241-AW-105	Tank Contents	241-AW-105	DN/PD	NA	Saltcake	Solid	260 kgal	No	NA	NA
241-AW-106	Tank Contents	241-AW-106	DN	1.16 Mgal	Supernate	Liquid	308 kgal	No	NA	NA
241-AW-106	Tank Contents	241-AW-106	DN	NA	Saltcake	Solid	228 kgal	No	NA	NA
241-AW-101	Tank Headspace	241-AW-101	NA	NA	NA	Vapor	1057 m3, no NH3 present	No	NA	NA
241-AW-102	Tank Headspace	241-AW-102	NA	NA	NA	Vapor	4963 m3, no NH3 present	No	NA	NA
241-AW-103	Tank Headspace	241-AW-103	NA	NA	NA	Vapor	3377 m3, no NH3 present	No	NA	NA

Table D3.1-1. Material at Risk Table.[1] (94 sheets)

Field Name	MAR-Subject	MAR-Description	MAR-Classification	Capacity	Material Type	Physical Form	Volume or Activity	Transient	Quantity	Comments
241-AW-104	Tank Headspace	241-AW-104	NA	NA	NA	Vapor	1069 m3, no NH3 present	No	NA	NA
241-AW-105	Tank Headspace	241-AW-105	NA	NA	NA	Vapor	3911 m3, no NH3 present	No	NA	NA
241-AW-106	Tank Headspace	241-AW-106	NA	NA	NA	Vapor	3290 m3, no NH3 present	No	NA	NA
241-AW*	Rail or Truck Tanker Contents	None	NA	NA	NA	NA	NA	NA	NA	NA
241-AW*	Contamination on Vehicle	None	NA	NA	NA	NA	NA	NA	NA	Contaminated vehicle staging area present - no vehicles noted.
241-AW*	Contamination on Equipment or Tools	None	NA	NA	NA	NA	NA	NA	NA	NA
241-AW	Ventilation Filter Contents	Primary	NA	200 mR/hr maximum for all HEPA filters	NA	Particulate	Yes - disposal in accord w/ WHC-EP-0063-4 (9/93)	Yes	NA	HEPA filters monitored for DP drop/loading.
241-AW	Ventilation Filter Contents	Annulus	NA	200 mR/hr maximum for all HEPA filters	NA	Particulate	Yes - disposal in accord w/ WHC-EP-0063-4 (9/93)	Yes	NA	HEPA filters monitored for DP drop/loading.
241-AW	Ventilation Filter Contents	Breather	NA	NA	NA	NA	NA	NA	NA	NA
241-AW	Contamination In Ventilation System	De-entrainer	Process condensate	NA	NA	Liquid	Residual	NA	NA	NA
241-AW	Contamination In Ventilation System	Seal loop	Process condensate	NA	NA	Liquid	Residual	NA	NA	NA
241-AW	Contents of Pipeline and/or Source Tank During Transfer	None	NA	NA	NA	NA	NA	NA	NA	NA
241-AW	Contents of Sump	NA	NA	NA	NA	NA	NA	NA	NA	There are no sumps in AW Farm.
241-AW-01B-06B	Contamination in Pit or Box	Annulus pump pits 01B-06B	Residual contamination	1.5 Kgal	NA	Residue	Unknown	No	6 pits	NA
241-AW-01B	Contamination in Pit or Box	Annulus pump pit 01B	Residual contamination	1.5 Kgal	NA	Residue	Unknown	No	1 pit	NA
241-AW-02B	Contamination in Pit or Box	Annulus pump pit 02B	Residual contamination	1.5 Kgal	NA	Residue	Unknown	No	1 pit	NA

Table D3.1-1. Material at Risk Table.[1] (94 sheets)

Field Name	MAR-Subject	MAR-Description	MAR-Classification	Capacity	Material Type	Physical Form	Volume or Activity	Transient	Quantity	Comments
241-AW-03B	Contamination in Pit or Box	Annulus pump pit 03B	Residual contamination	1.5 Kgal	NA	Residue	Unknown	No	1 pit	NA
241-AW-04B	Contamination in Pit or Box	Annulus pump pit 04B	Residual contamination	1.5 Kgal	NA	Residue	Unknown	No	1 pit	NA
241-AW-05B	Contamination in Pit or Box	Annulus pump pit 05B	Residual contamination	1.5 Kgal	NA	Residue	Unknown	No	1 pit	NA
241-AW-06B	Contamination in Pit or Box	Annulus pump pit 06B	Residual contamination	1.5 Kgal	NA	Residue	Unknown	No	1 pit	NA
241-AW-01A-06A	Contamination in Pit or Box	Central pump pits 01A-06A	Residual contamination	3.7 Kgal	NA	Residue	Unknown	No	6 pits	NA
241-AW-01A	Contamination in Pit or Box	Central pump pit 01A	Residual contamination	3.7 Kgal	NA	Residue	Unknown	No	1 pit	NA
241-AW-02A	Contamination in Pit or Box	Central pump pit 02A	Residual contamination	3.7 Kgal	NA	Residue	Unknown	No	1 pit	NA
241-AW-03A	Contamination in Pit or Box	Central pump pit 03A	Residual contamination	3.7 Kgal	NA	Residue	Unknown	No	1 pit	NA
241-AW-04A	Contamination in Pit or Box	Central pump pit 04A	Residual contamination	3.7 Kgal	NA	Residue	Unknown	No	1 pit	NA
241-AW-05A	Contamination in Pit or Box	Central pump pit 05A	Residual contamination	3.7 Kgal	NA	Residue	Unknown	No	1 pit	NA
241-AW-06A	Contamination in Pit or Box	Central pump pit 06A	Residual contamination	3.7 Kgal	NA	Residue	Unknown	No	1 pit	NA
241-AW-01C-06C	Contamination in Pit or Box	Leak detection pump pits 01C-06C	Residual contamination	1.7 Kgal	NA	Residue	Unknown	No	6 pits	NA
241-AW-01C	Contamination in Pit or Box	Leak detection pump pit 01C	Residual contamination	1.7 Kgal	NA	Residue	Unknown	No	1 pit	NA
241-AW-02C	Contamination in Pit or Box	Leak detection pump pit 02C	Residual contamination	1.7 Kgal	NA	Residue	Unknown	No	1 pit	NA
241-AW-03C	Contamination in Pit or Box	Leak detection pump pit 03C	Residual contamination	1.7 Kgal	NA	Residue	Unknown	No	1 pit	NA
241-AW-04C	Contamination in Pit or Box	Leak detection pump pit 04C	Residual contamination	1.7 Kgal	NA	Residue	Unknown	No	1 pit	NA
241-AW-05C	Contamination in Pit or Box	Leak detection pump pit 05C	Residual contamination	1.7 Kgal	NA	Residue	Unknown	No	1 pit	NA

Table D3.1-1. Material at Risk Table.[1] (94 sheets)

Field Name	MAR-Subject	MAR-Description	MAR-Classification	Capacity	Material Type	Physical Form	Volume or Activity	Transient	Quantity	Comments
241-AW-06C	Contamination in Pit or Box	Leak detection pump pit 06C	Residual contamination	1.7 Kgal	NA	Residue	Unknown	No	1 pit	NA
241-AW-02D	Contamination in Pit or Box	Drain pit 02D	Residual contamination	7.1 Kgal	NA	Residue	Unknown	No	1 pit	NA
241-AW-A	Contamination in Pit or Box	Valve pit AW-A	Residual contamination	4.4 Kgal	NA	Residue	Unknown	No	1 pits	NA
241-AW-B	Contamination in Pit or Box	Valve pit AW-B	Residual contamination	4.4 Kgal	NA	Residue	Unknown	No	1 pits	NA
241-AW-K1	Contamination in Pit or Box	Primary seal pot pit AW K1	Residual contamination	.06 Kgal	NA	Residue	Unknown	No	1 pit	NA
241-AW-K2	Contamination in Pit or Box	Annulus seal pot pit AW K2	Residual contamination	Unknown	NA	Residue	Unknown	No	1 pits	NA
241-AW-02E	Contamination in Pit or Box	Feed pump pit 02E	Residual contamination	3 Kgal	NA	Residue	Unknown	No	1 pits	NA
241-AW-VIP	Contamination in Pit or Box	Ventilation instrument pits VIP-1,2,3	Residual contamination	5.2 Kgal	NA	Residue	Unknown	No	3 pits	NA
241-AW-FP	Contamination in Pit or Box	Flush pit	Residual contamination	.8 Kgal	NA	Residue	Unknown	No	1 pit	NA
COB-AW-1-12	Contamination in Pit or Box	Clean out boxes AW 9, 10	Residual contamination	.047 Kgal	NA	Residue	Unknown	No	2 COBs	NA
COB-AW-01	Contamination in Pit or Box	Clean out boxes AW 9, 10	Residual contamination	.047 Kgal	NA	Residue	Unknown	No	2 COBs	NA
COB-AW-02	Contamination in Pit or Box	Clean out boxes AW 9, 10	Residual contamination	.047 Kgal	NA	Residue	Unknown	No	2 COBs	NA
COB-AW-03	Contamination in Pit or Box	Clean out boxes AW 9, 10	Residual contamination	.047 Kgal	NA	Residue	Unknown	No	2 COBs	NA
COB-AW-04	Contamination in Pit or Box	Clean out boxes AW 9, 10	Residual contamination	.047 Kgal	NA	Residue	Unknown	No	2 COBs	NA
COB-AW-05	Contamination in Pit or Box	Clean out boxes AW 9, 10	Residual contamination	.047 Kgal	NA	Residue	Unknown	No	2 COBs	NA
COB-AW-06	Contamination in Pit or Box	Clean out boxes AW 9, 10	Residual contamination	.047 Kgal	NA	Residue	Unknown	No	2 COBs	NA

Table D3.1-1. Material at Risk Table.[1] (94 sheets)

Field Name	MAR-Subject	MAR-Description	MAR-Classification	Capacity	Material Type	Physical Form	Volume or Activity	Transient	Quantity	Comments
COB-AW-07	Contamination in Pit or Box	Clean out boxes AW 9, 10	Residual contamination	.047 Kgal	NA	Residue	Unknown	No	2 COBs	NA
COB-AW-08	Contamination in Pit or Box	Clean out boxes AW 9, 10	Residual contamination	.047 Kgal	NA	Residue	Unknown	No	2 COBs	NA
COB-AW-09	Contamination in Pit or Box	Clean out boxes AW 9, 10	Residual contamination	.047 Kgal	NA	Residue	Unknown	No	2 COBs	NA
COB-AW-10	Contamination in Pit or Box	Clean out boxes AW 9, 10	Residual contamination	.047 Kgal	NA	Residue	Unknown	No	2 COBs	NA
COB-AW-11	Contamination in Pit or Box	Clean out boxes AW 9, 10	Residual contamination	.047 Kgal	NA	Residue	Unknown	No	2 COBs	NA
COB-AW-12	Contamination in Pit or Box	Clean out boxes AW 9, 10	Residual contamination	.047 Kgal	NA	Residue	Unknown	No	2 COBs	NA
241-AW*	SARA 313 Materials	Cylinder	90% argon / 10% methane	480 ft3	NA	Gas mixture	480 ft3	Yes	2 bottles	For PCM1-B.
241-AW*	Other	Service building	Raw water	NA	NA	Residue	NA	No	NA	NA
241-AW*	Other	Change trailer	Low level waste	NA	SWPs, other low level waste	Solid	Low level	Yes	NA	Controlled by HPTs.
241-AW*	Other	Operations support facility 272-AW	See comment	See comment	See comment	See comment	See comment	See comment	See comment	For maintenance shop materials refer to the "Hazardous Materials Inventory Database," 1/10/96.
241-AW*	Other	Acid sewer manhole	See comment	See comment	See comment	See comment	See comment	See comment	See comment	The acid sewer manhole is located outside of the AW Farm. It is now isolated, and was used for access to the PUREX chemical sewer.
AW Satellite Accumulation Area	Other	Satellite accumulation area	RCRA mixed waste	6-55 gallon mixed waste drums (maximum)	Soil, tank contacted, HEPA filters, misc. RMW wastes	Solid	Low Level (less than class C)	Yes	6-55 gal drums max capacity	NA

Table D3.1-1. Material at Risk Table.[1] (94 sheets)

Field Name	MAR-Subject	MAR-Description	MAR-Classification	Capacity	Material Type	Physical Form	Volume or Activity	Transient	Quantity	Comments
241-AX-101	Tank Contents	AX-101	DSSF	1.0 Mgal	Sludge Saltcake	Solid Solid	3 Kgal 745 Kgal - saltcake contains an estimated 298 Kgal of pumpable liquid.	No	NA	AX-101 is a watch list tank (hydrogen/flammable gas). AX-101 will be pumped.
241-AX-102	Tank Contents	AX-102	CC	1.0 Mgal	Supernate Sludge Saltcake	Liquid Solid Solid	3 Kgal 7 Kgal 29 Kgal	No	NA	AX-102 is a watch list tank (organics). Tank is interim stabilized, assumed leaker.
241-AX-103	Tank Contents	AX-103	CC	1.0 Mgal	Sludge Saltcake	Solid Solid	2 Kgal 110 Kgal	No	NA	AX-103 is a watch list tank (hydrogen/flammable gas). Tank is interim stabilized.
241-AX-104	Tank Contents	AX-104	NCPLX	1.0 Mgal	Sludge	Solid	7 Kgal	No	NA	Tank is interim stabilized, assumed leaker.
241-AX-101	Tank Headspace	AX-101	NA	NA	NA	Vapor	1953 m3, total NH3 67 g	NA	NA	NA
241-AX-102	Tank Headspace	AX-102	NA	NA	NA	Vapor	1953 m3, total NH3 120 g	NA	NA	NA
241-AX-103	Tank Headspace	AX-103	NA	NA	NA	Vapor	1953 m3, total NH3 140 g	NA	NA	NA
241-AX-104	Tank Headspace	AX-104	NA	NA	NA	Vapor	1953 m3, no NH3 present	NA	NA	NA
241-AX*	Rail or Truck Tanker Contents	None	NA	NA	NA	NA	NA	NA	NA	NA
241-AX*	Contamination on Vehicle	None	NA	NA	NA	NA	NA	NA	NA	NA
241-AX*	Contamination on Equipment or Tools	None	NA	NA	NA	NA	NA	NA	NA	NA
241-AX*	Ventilation Filter Contents	Primary	NA	NA	NA	NA	NA	NA	NA	NA
241-AX*	Ventilation Filter Contents	Annulus	NA	NA	NA	NA	NA	NA	NA	NA

Table D3.1-1. Material at Risk Table.[1] (94 sheets)

Field Name	MAR-Subject	MAR-Description	MAR-Classification	Capacity	Material Type	Physical Form	Volume or Activity	Transient	Quantity	Comments
241-AX*	Ventilation Filter Contents	Breather	NA	1 R/hr at six inches	NA	Particu-late	<100 mR/hr *	Yes, filters disposed of in accord w/ EP-0063, Rev 4 (9/93)	NA	*Not identified by East Tank Farms High/Very High Radiation Area Log as a high rad area. SAR for DSTs indicates 200 mR/hr limit on HEPA filters through administrative controls. No reference found that indicates this limit applies to SSTs. Filters are tested annually for efficiency and replace if they fail.
241-AX*	Contamination In Ventilation System	De-entrainer	NA	NA	NA	NA	NA	NA	NA	AX Farm has no ventilation system. It is served by Tank Farm A.
241-AX*	Contamination In Ventilation System	Seal loop	Silicon based oil	<1 gallon	NA	Liquid	Residual	No	1 per breather (total 4)	NA
241-AX*	Contents of Pipeline and/or Source Tank During Transfer	NA	NA	NA	NA	NA	NA	NA	NA	Refer to transfer line Table 7.
241-AX*	Contents of Sump or Encasement	None	NA	NA	NA	NA	NA	NA	NA	NA
241-AX*	Contamination in Pit or Box	Primary seal pot pit	Residual contamination	.1 K gal	NA	Residue	Unknown	No	1 seal pot pit	NA
241-AX*	Contamination in Pit or Box	Distributor pit	Residual contamination	2.5 K gal	NA	Residue	Unknown	No	1 distribut or pit	NA
241-AX*	Contamination in Pit or Box	Leak detection pit (4)	Residual contamination	.9 K gal each	NA	Residue	Unknown	No	4 leak detection pits	NA
241-AX*	Contamination in Pit or Box	Dry wells	NA	NA	NA	NA	<100 mR/hr	No	29 dry wells	NA
241-AX*	Contamination in Pit or Box	Drain pit	Unknown	Unknown	NA	Unknown	Unknown	No	1 drain pit	NA
241-AX-151	Contamination in Pit or Box	Diverter station AX-151	Residual contamination	31.9 K gal	NA	Residue	Unknown	No	1 diverter station	NA
241-AX-152	Contamination in Pit or Box	Diverter station and catch tank AX-152	Residual contamination	21.2 K gal	NA	Residue	Unknown	No	1 diverter station	NA

Table D3.1-1. Material at Risk Table.[1] (94 sheets)

Field Name	MAR-Subject	MAR-Description	MAR-Classification	Capacity	Material Type	Physical Form	Volume or Activity	Transient	Quantity	Comments
241-AX	Contamination in Pit or Box	Valve pit for diverter	Residual contamination	.6 K gal	NA	Residue	Unknown	No	1 valve pit	NA
241-AX-153	Contamination in Pit or Box	Isolation jumper pit AX-153	Residual contamination	1.5 K gal	NA	Residue	Unknown	No	1 isolation jumper pit	NA
241-AX-155	Contamination in Pit or Box	Diversion box AX-155	Residual contamination	3.3 K gal	NA	Residue	Unknown	No	1 diversion box	NA
241-AX-501	Contamination in Pit or Box	Valve pit AX-501	Residual contamination	1.1 K gal	NA	Residue	Unknown	No	1 valve pit	NA
241-AX-VP	Contamination in Pit or Box	Valve pit	Residual contamination	3.2 K gal	NA	Residue	Unknown	No	1 valve pit	NA
241-AX-A	Contamination in Pit or Box	Valve pit AX-A	Residual contamination	4.3 K gal each	NA	Residue	Unknown	No	1 valve pit	NA
241-AX-B	Contamination in Pit or Box	Valve pit AX-B	Residual contamination	4.3 K gal each	NA	Residue	Unknown	No	1 valve pit	NA
241-AX-SP	Contamination in Pit or Box	Service pit	Raw water	.62 K gal	NA	Liquid	NA	No	1 service pit	NA
241-AX-A	Contamination in Pit or Box	Flush pit (2)	Raw water	.82 K gal	NA	Liquid	NA	No	1 flush pit	NA
241-AX-B	Contamination in Pit or Box	Flush pit	Raw water	.82 K gal	NA	Liquid	NA	No	1 flush pit	NA
241-AX-COB	Contamination in Pit or Box	Cleanout boxes	Residual contamination	.07 K gal each	NA	Residue	Unknown	No	10 COBs	NA
241-AX*	SARA 313 Materials	None	NA	NA	NA	NA	NA	NA	NA	NA
AX Satellite Accumulation Area	Other	Satellite accumulation area	RCRA mixed waste	Six 55 gal mixed waste drums	Soil, tank contacted, HEPA filters, misc. RMW wastes	Solid	Low level (less than class C)	Yes	Six 55 gal drums max capacity	Inventories removed when filled, transported to 209-E 90 day storage facility. This SAA serves A, AX, AY and AZ farms, and is located in AY Farm.
241-AY-101	Tank Contents	AY-101	DC	1.16 Mgal	Supernate Solid	Liquid Solid	850 Kgal 83 Kgal	No	NA	NA
241-AY-102	Tank Contents	AY-102	DN	1.16M gal	Supernate Solid	Liquid Solid	694 Kgal 32 Kgal	No	NA	NA
241-AY-101	Tank Headspace	AY-101	NA	NA	NA	Vapor	1780 m3, no NH3 present	No	NA	NA
241-AY-102	Tank Headspace	AY-102	NA	NA	NA	Vapor	1572 m3, no NH3 present	No	NA	NA

Table D3.1-1. Material at Risk Table.[1] (94 sheets)

Field Name	MAR-Subject	MAR-Description	MAR-Classification	Capacity	Material Type	Physical Form	Volume or Activity	Transient	Quantity	Comments
241-AY*	Rail or Truck Tanker Contents	None	NA	NA	NA	NA	NA	NA	NA	NA
241-AY*	Contamination on Vehicle	Construction equipment (trucks, crane)	Residual contamination	NA	NA	Residue	Unknown	Yes	Varies with construction activities	Construction for new ventilation facilities for AY and AZ Farms.
241-AY*	Contamination on Equipment or Tools	Construction tools	Residual contamination	NA	NA	Residue	Unknown	Yes	Varies with construction activities	Construction for new ventilation facilities for AY and AZ Farms.
241-AY*	Ventilation Filter Contents	Primary	NA	NA	NA	NA	NA	NA	NA	NA
241-AY*	Ventilation Filter Contents	Annulus	NA	200 mR/hr maximum for all HEPA filters	NA	Particulate	200 mR/hr maximum	Yes - disposed in accord w/ WHC-EP-0063-4 (9/93)	NA	HEPA filters monitored for DP drop/loading in accordance w/ manufacturer's specs.
241-AY*	Ventilation Filter Contents	Breather	NA	NA	NA	NA	NA	NA	NA	NA
241-AY*	Contamination In Ventilation System	De-entrainer	Process condensate	NA	NA	Liquid	Residual	NA	NA	NA
241-AY*	Contamination In Ventilation System	Seal loop	Process condensate	NA	NA	Liquid	Residual	NA	NA	NA
241-AY*	Contents of Pipeline and/or Source Tank During Transfer	NA	NA	NA	NA	NA	NA	NA	NA	Refer to transfer line Table 7.
241-AY*	Contents of Sump or Encasement	Encasement: From 101-AY to 102-AY	Residual contamination	1.2 K gal	NA	Residue	Unknown	No	NA	Volume calculations represent available area in pipe encasements.
241-AY*	Contents of Sump or Encasement	Encasement: Between tanks to 241-AX-152 diversion box	Residual contamination	9.9 K gal	NA	Residue	Unknown	No	NA	Volume calculations represent available area in pipe encasements.
241-AY-01A	Contamination in Pit or Box	Pump pit 01A	Residual contamination	3.6 K gal	NA	Residue	Unknown	No	1 pump pit	NA

Table D3.1-1. Material at Risk Table.[1] (94 sheets)

Field Name	MAR-Subject	MAR-Description	MAR-Classification	Capacity	Material Type	Physical Form	Volume or Activity	Transient	Quantity	Comments
241-AY-01F	Contamination in Pit or Box	Annulus pumpout pit 01F	Residual contamination	1.6 K gal	NA	Residue	Unknown	No	1 pumpout pit	NA
241-AY-01B-E	Contamination in Pit or Box	Sluice pits 01B,C,D,E	Residual contamination	2.5 K gal each	NA	Residue	Unknown	No	4 sluice pits	NA
241-AY*	Contamination in Pit or Box	Leak detection pit	Residual contamination	3.1 K gal	NA	Residue	Unknown	No	1 leak det. pit. includes: lk det well, lk det pit, rad det well, rad dry well	NA
241-AY*	Contamination in Pit or Box	Encasement leak detection pit	Residual contamination	3.1 K gal	NA	Residue	Unknown	No	1 enc pit includes: lk det pit, enc drain well, rad det well	Volume calculations represent available area in pipe encasements.
241-AY*	Contamination in Pit or Box	Encasement on N side of tank	Residual contamination	26.7 K gal	NA	Residue	Unknown	No	1 encasement	Volume calculations represent available area in pipe encasements.
241-AY-02A	Contamination in Pit or Box	Pump pit 02A	Residual contamination	3.6 K gal	NA	Residue	Unknown	No	1 pump pit	NA
241-AY*	Contamination in Pit or Box	Annulus pumpout pit	Residual contamination	9.6 K gal	NA	Residue	Unknown	No	1 pumpout pit	NA
241-AY-02B-E	Contamination in Pit or Box	Sluice pits 02B,C,D,E	Residual contamination	2.5 K gal each	NA	Residue	Unknown	No	4 sluice pits	NA
241-AY*	Contamination in Pit or Box	Leak detection pit	Residual contamination	3 K gal	NA	Residue	Unknown	No	1 leak det pit includes: lk det well, lk det pit, rad dry well, rad det well	NA
241-AY*	Contamination in Pit or Box	Encasement S side of tank	Residual contamination	.3 K gal	NA	Residue	Unknown	No	1 encasement	NA
241-AY-501	Contamination in Pit or Box	Condensate valve pit AY-501	Residual contamination	4 K gal	NA	Residue	Unknown	No	1 valve pit	NA

Table D3.1-1. Material at Risk Table.[1] (94 sheets)

Field Name	MAR-Subject	MAR-Description	MAR-Classification	Capacity	Material Type	Physical Form	Volume or Activity	Transient	Quantity	Comments
241-AY-151	Contamination in Pit or Box	Pumpout pit AY-151	Residual contamination	1.3 K gal	NA	Residue	Unknown	No	1 pumpout pit	NA
241-AY-152	Contamination in Pit or Box	Transfer box AY-152	Residual contamination	4.9 K gal	NA	Residue	Unknown	No	1 transfer box	NA
241-AY*	Contamination in Pit or Box	Raw water pits	Residual contamination	2 @ 1.2 K gal each; 8 @ .2 Kgal each; 1 @ .6 K gal	NA	Residue	Unknown	No	11 Raw water pits	NA
241-AY*	Contamination in Pit or Box	Condensate drain valve pit	Residual contamination	.1 K gal	NA	Residue	Unknown	No	1 cond dr pit	NA
241-AY-1	Contamination in Pit or Box	Cleanout box AY-1	Residual contamination	.07 K gal	NA	Residue	Unknown	No	1 COB	NA
241-AY*	SARA 313 Materials	Outside change trailer (2)	10 % methane/ 90% argon	480 ft^3/ bottle	NA	Gas	NA	Yes	2 bottles each trailer	NA
241-AY*	SARA 313 Materials	See comment	NA	NA	NA	NA	NA	NA	NA	Major amount of construction materials for new vent modifications.
AY Satellite Accumulation Area	Other	Satellite accumulation area	RCRA mixed waste	6-55 gallon mixed waste drums (maximum)	Soil, tank contacted, HEPA filters, misc. RMW wastes	Solid	Low level (less than class C)	Yes	6-55 gal drums max capacity	NA
241-AY	Other	Sheds (3)	Misc. low level waste	NA	SWPs	Solid	Low level	Yes	Approx. 3 bags per shed	NA
241-AZ-101	Tank Contents	AZ-101	Aging	1.16 Mgal	Supernate Solid	Liquid Solid	882 Kgal 35 Kgal	No	NA	NA
241-AZ-102	Tank Contents	AZ-102	Aging	1.16 Mgal	Supernate Solid	Liquid Solid	859 Kgal 95 Kgal	No	NA	NA
241-AZ-101	Tank Headspace	AZ-101	NA	NA	NA	Vapor	1826 m3, no NH3 present	No	NA	NA
241-AZ-102	Tank Headspace	AZ-102	NA	NA	NA	Vapor	1704 m3, no NH3 present	No	NA	NA
241-AZ*	Rail or Truck Tanker Contents	None	NA	NA	NA	NA	NA	NA	NA	NA

Table D3.1-1. Material at Risk Table.[1] (94 sheets)

Field Name	MAR-Subject	MAR-Description	MAR-Classification	Capacity	Material Type	Physical Form	Volume or Activity	Transient	Quantity	Comments
241-AZ*	Contamination on Vehicle	Construction equipment (trucks, crane)	Residual contamination	NA	NA	Residue	Unknown	Yes	Varies with construction activities	Construction for new ventilation and recirculation facilities for AY and AZ.
241-AZ*	Contamination on Equipment or Tools	Construction tools	Residual contamination	NA	NA	Residue	Unknown	Yes	Varies with construction activities	Construction for new ventilation and recirculation facilities for AY and AZ Farms.
241-AZ*	Ventilation Filter Contents	Primary	NA	NA	NA	NA	NA	NA	NA	NA
241-AZ*	Ventilation Filter Contents	Annulus	NA	200 mR/hr maximum for all HEPA filters	NA	Particulate	200 mR/hr maximum	Yes - disposed in accord w/ WHC-EP-0063-4 (9/93)	NA	HEPA filters monitored for DP drop/loading in accordance w/ manufacturer's specs.
241-AZ*	Ventilation Filter Contents	Breather	NA	NA	NA	NA	NA	NA	NA	NA
241-AZ*	Contamination In Ventilation System	De-entrainer	Process condensate	NA	NA	Liquid	Residual	NA	NA	NA
241-AZ*	Contamination In Ventilation System	Seal loop	Process condensate	NA	NA	Liquid	Residual	NA	NA	NA
241-AZ*	Contents of Pipeline and/or Source Tank During Transfer	NA	NA	NA	NA	NA	NA	NA	NA	Refer to transfer line Table 7.
241-AZ*	Contents of Sump or Encasement	North encasement	Residual contamination	.12 K gal	NA	Residue	Unknown	No	NA	Volume calculations represent available area in pipe encasements.
241-AZ*	Contents of Sump or Encasement	South encasement	Residual contamination	5.1 K gal	NA	Residue	Unknown	No	NA	Volume calculations represent available area in pipe encasements.
241-AZ*	Contents of Sump or Encasement	West encasement to sluice transfer box	Residual contamination	6.8 K gal	NA	Residue	Unknown	No	NA	Volume calculations represent available area in pipe encasements.
241-AZ*	Contents of Sump or Encasement	Encasement between AZ-151 and AZ-152	Residual contamination	2 K gal	NA	Residue	Unknown	No	NA	Volume calculations represent available area in pipe encasements.

Table D3.1-1. Material at Risk Table.[1] (94 sheets)

Field Name	MAR-Subject	MAR-Description	MAR-Classification	Capacity	Material Type	Physical Form	Volume or Activity	Transient	Quantity	Comments
241-AZ*	Contents of Sump or Encasement	Sluice transfer box encasement	Residual contamination	4.8 K gal	NA	Residue	Unknown	No	NA	Volume calculations represent available area in pipe encasements.
241-AZ*	Contamination in Pit or Box	AZ-101								
241-AZ-01A	Contamination in Pit or Box	Pump pit 01A	Residual contamination	3.4 K gal	NA	Residue	Unknown	No	1 pump pit	NA
241-AZ-01F	Contamination in Pit or Box	Annulus pumpout pit 01F	Residual contamination	1.6 K gal	NA	Residue	Unknown	No	1 annulus pumpout pit	NA
241-AZ-01B-C	Contamination in Pit or Box	Sluice pits 01B,C	Residual contamination	2.9 K gal each	NA	Residue	Unknown	No	2 sluice pits	NA
241-AZ-01B	Contamination in Pit or Box	Sluice pit 01B	Residual contamination	2.9 K gal each	NA	Residue	Unknown	No	1 sluice pit	NA
241-AZ-01C	Contamination in Pit or Box	Sluice pit 01C	Residual contamination	2.9 K gal each	NA	Residue	Unknown	No	1 sluice pit	NA
241-AZ	Contamination in Pit or Box	Leak detection pit	Residual contamination	3 K gal	NA	Residue	Unknown	No	1 leak det. pit includes: lk det well, lk det pit, rad det well, rad dry well	NA
241-AZ	Contamination in Pit or Box	Raw water valve pit	Raw water	1.3 K gal	NA	Residue	No	No	1 raw water valve pit	NA
241-AZ-153	Contamination in Pit or Box	Vent valve pit	Residual contamination	.8 K gal	NA	Residue	Unknown	No	1 vent valve pit	NA
241-AZ	Contamination in Pit or Box	Sluice raw water pit	Raw water	.2 K gal	NA	Residue	No	No	1 sluice raw water valve pit	NA
241-AZ	Contamination in Pit or Box	AZ-102								
241-AZ-02A	Contamination in Pit or Box	Pump pit 02A	Residual contamination	3.4 K gal	NA	Residue	Unknown	No	1 pump pit	NA
241-AZ-02F	Contamination in Pit or Box	Annulus pumpout pit 02F	Residual contamination	1.6 K gal	NA	Residue	Unknown	No	1 pumpout pit	NA
241-AZ-02B-C	Contamination in Pit or Box	Sluice pits 02B,C	Residual contamination	2.8 K gal each	NA	Residue	Unknown	No	2 sluice pits	NA
241-AZ-02B	Contamination in Pit or Box	Sluice pit 02B	Residual contamination	2.8 K gal each	NA	Residue	Unknown	No	1 sluice pit	NA

Table D3.1-1. Material at Risk Table.[1] (94 sheets)

Field Name	MAR-Subject	MAR-Description	MAR-Classification	Capacity	Material Type	Physical Form	Volume or Activity	Transient	Quantity	Comments
241-AZ-02C	Contamination in Pit or Box	Sluice pit 02C	Residual contamination	2.8 K gal each	NA	Residue	Unknown	No	1 sluice pit	NA
241-AZ	Contamination in Pit or Box	Leak detection pit	Residual contamination	1.9 K gal	NA	Residue	Unknown	No	1 leak det pit includes: lk det well, lk det pit, rad dry well, rad det well	NA
241-AZ	Contamination in Pit or Box	Encasement leak detection pit	Residual contamination	2.8 K gal	NA	Residue	Unknown	No	1 encase-ment	NA
241-AZ	Contamination in Pit or Box	Raw water valve pit	Raw water	1.3 K gal	NA	Residue	No	No	1 raw water valve pit	NA
241-AZ-562	Contamination in Pit or Box	Vent valve pit	Residual contamination	.8 K gal	NA	Residue	Unknown	No	1 vent valve pit	NA
241-AZ	Contamination in Pit or Box	Sluice raw water pit	Raw water	.2 K gal	NA	Residue	No	No	1 sluice raw water valve pit	NA
241-AZ	Contamination in Pit or Box	Other pits								
COB-AZ-1-10	Contamination in Pit or Box	Cleanout boxes AZ1-10	Residual contamination	.06 K gal each	NA	Residue	Unknown	No	10 COBs	NA
241-AZ-1	Contamination in Pit or Box	Cleanout box AZ1	Residual contamination	.06 K gal each	NA	Residue	Unknown	No	10 COBs	NA
241-AZ-2	Contamination in Pit or Box	Cleanout box AZ2	Residual contamination	.06 K gal each	NA	Residue	Unknown	No	10 COBs	NA
241-AZ-3	Contamination in Pit or Box	Cleanout box AZ3	Residual contamination	.06 K gal each	NA	Residue	Unknown	No	10 COBs	NA
241-AZ-4	Contamination in Pit or Box	Cleanout box AZ4	Residual contamination	.06 K gal each	NA	Residue	Unknown	No	10 COBs	NA
241-AZ-5	Contamination in Pit or Box	Cleanout box AZ5	Residual contamination	.06 K gal each	NA	Residue	Unknown	No	10 COBs	NA
241-AZ-6	Contamination in Pit or Box	Cleanout box AZ6	Residual contamination	.06 K gal each	NA	Residue	Unknown	No	10 COBs	NA
241-AZ-7	Contamination in Pit or Box	Cleanout box AZ7	Residual contamination	.06 K gal each	NA	Residue	Unknown	No	10 COBs	NA
241-AZ-8	Contamination in Pit or Box	Cleanout box AZ8	Residual contamination	.06 K gal each	NA	Residue	Unknown	No	10 COBs	NA

Table D3.1-1. Material at Risk Table.[1] (94 sheets)

Field Name	MAR-Subject	MAR-Description	MAR-Classification	Capacity	Material Type	Physical Form	Volume or Activity	Transient	Quantity	Comments
241-AZ-9	Contamination in Pit or Box	Cleanout box AZ9	Residual contamination	.06 K gal each	NA	Residue	Unknown	No	10 COBs	NA
241-AZ-10	Contamination in Pit or Box	Cleanout box AZ10	Residual contamination	.06 K gal each	NA	Residue	Unknown	No	10 COBs	NA
241-AZ-161	Contamination in Pit or Box	Airlift circulator 601 caisson AZ-161	NA	8.9 K gal	NA	None	NA	NA	1 caisson	NA
241-AZ-162	Contamination in Pit or Box	Airlift circulator 602 caisson AZ-162	NA	7.3 K gal	NA	None	NA	NA	1 caisson	NA
241-AZ-152	Contamination in Pit or Box	Sluice transfer box AZ-152	Residual contamination	7.5 K gal	NA	Residue	Unknown	No	1 sluice transfer box	NA
241-AZ-155	Contamination in Pit or Box	Contaminated equipment storage pit AZ-155	Residual contamination	53.7 K gal	NA	Residue	Unknown	No	1 storage pit	NA
241-AZ-151	Contamination in Pit or Box	Catch tank pit AZ-151	Residual contamination	2.9 K gal	NA	Residue	Unknown	No	1 catch tank pit	NA
241-AZ-154	Contamination in Pit or Box	Condensate pump pit AZ-154	Residual contamination	2.3 K gal	NA	Residue	Unknown	No	1 con. pump pit	NA
241-AZ*	Contamination in Pit or Box	Steam trap	Residual contamination	1.5 K gal	NA	Residue	Unknown	No	1 steam trap	Steam has been isolated to the facility.
241-AZ*	Contamination in Pit or Box	Condensate valve caisson	Residual contamination	.2 K gal	NA	Residue	Unknown	No	1 con. valve caisson	NA
241-AZ*	Contamination in Pit or Box	Steam trap and PRV station	Residual contamination	1.1 K gal	NA	Residue	Unknown	No	1 st. trap and prv sta	NA
216-A-39	Contamination in Pit or Box	Crib 216-A-39	Residual contamination	Unknown	NA	Residue	Unknown	No	1 crib	AN
241-AZ*	SARA 313 Materials	See comment	NA	NA	NA	NA	NA	NA	NA	Major amount of construction materials for new vent modifications.
241-AZ*	Other	Steel storage box	Unknown	NA	NA	Solid	Low level	Yes	1 small shed	NA

Table D3.1-1. Material at Risk Table.[1] (94 sheets)

Field Name	MAR-Subject	MAR-Description	MAR-Classification	Capacity	Material Type	Physical Form	Volume or Activity	Transient	Quantity	Comments
216-W-LWC	Crib	216-W-LWC	NA	NA	NA	NA	NA	NA	NA	Crib received 1,200,000,000 liters of liquid process waste water from contaminated laundry.
216-Z-20	Crib	216-Z-20	NA	NA	NA	NA	NA	NA	NA	Crib received 3,800,000,000 liters of liquid cooling water, steam condensate, storm sewer, and drains from 234-52, 231-Z, 291-Z, 232-Z, 236-Z, and 2736-Z.
216-B-3-3	Ditch	216-B-3-3	NA	NA	NA	NA	NA	NA	NA	Ditch transported and percolated cooling water and chemical sewer drain from 221-B, 202-A 241-BY, and 244-CR Vault.
PFP Pond	Pond	PFP Pond	NA	NA	NA	NA	NA	NA	NA	This pond, also known as the tile field, is not in the Environmental Sites Database, it was not used for radiologically contaminated waste.
216-Z-21	Crib	216-Z-21	NA	NA	NA	NA	NA	NA	NA	This crib did not appear in the WIDS database. It is also called the 216-Z-21 seepage pond, it received steam condensate and cooling water from the PFP plant.
241-B-101	Tank Contents	B-101	NCPLX	530 kgal	Sludge	Solid	113 kgal	No	NA	Assumed leaker, interim stabilized 3/81 (documentation complete 7/91).
241-B-102	Tank Contents	B-102	NCPLX	530 kgal	Supernate Sludge Saltcake	Liquid Solid Solid	4 kgal 18 kgal 10 kgal	No	NA	Interim stabilized 8/85.
241-B-103	Tank Contents	B-103	NCPLX	530 kgal	Sludge	Solid	59 kgal	No	NA	Assumed leaker, interim stabilized 2/85.
241-B-104	Tank Contents	B-104	NCPLX	530 kgal	Supernate Sludge Saltcake	Liquid Solid Solid	1 kgal 301 kgal 69 kgal	No	NA	Interim stabilized 6/85.
241-B-105	Tank Contents	B-105	NCPLX	530 kgal	Sludge Saltcake	Solid Solid	40 kgal 266 kgal	No	NA	Assumed leaker, interim stabilized 12/84.
241-B-106	Tank Contents	B-106	NCPLX	530 kgal	Supernate Sludge	Liquid Solid	1 kgal 116 kgal	No	NA	Interim stabilized 3/85.

Table D3.1-1. Material at Risk Table.[1] (94 sheets)

Field Name	MAR-Subject	MAR-Description	MAR-Classification	Capacity	Material Type	Physical Form	Volume or Activity	Transient	Quantity	Comments
241-B-107	Tank Contents	B-107	NCPLX	530 kgal	Supernate Sludge	Liquid Solid	1 kgal 164 kgal	No	NA	Assumed leaker, interim stabilized 12/84.
241-B-108	Tank Contents	B-108	NCPLX	530 kgal	Sludge	Solid	94 kgal	No	NA	Interim stabilized 5/85.
241-B-109	Tank Contents	B-109	NCPLX	530 kgal	Sludge	Solid	127 kgal	No	NA	Interim stabilized 4/85.
241-B-110	Tank Contents	B-110	NCPLX	530 kgal	Supernate Sludge	Liquid Solid	1 kgal 245 kgal	No	NA	Assumed leaker, interim stabilized 12/84.
241-B-111	Tank Contents	B-111	NCPLX	530 kgal	Supernate Sludge	Liquid Solid	1 kgal 236 kgal	No	NA	Assumed leaker, interim stabilized 6/85.
241-B-112	Tank Contents	B-112	NCPLX	530 kgal	Supernate Sludge	Liquid Solid	3 kgal 30 kgal	No	NA	Assumed leaker, interim stabilized 5/85.
241-B-201	Tank Contents	B-201	NCPLX	55,000 gal	Supernate Sludge	Liquid Solid	1 kgal 28 kgal	No	NA	Assumed leaker, interim stabilized 8/81.
241-B-202	Tank Contents	B-202	NCPLX	55,000 gal	Sludge	Solid	27 kgal	No	NA	Interim stabilized 5/85.
241-B-203	Tank Contents	B-203	NCPLX	55,000 gal	Supernate Sludge	Liquid Solid	1 kgal 50 kgal	No	NA	Assumed leaker, interim stabilized 6/84.
241-B-204	Tank Contents	B-204	NCPLX	55,000 gal	Supernate Sludge	Liquid Solid	1 kgal 49 kgal	No	NA	Assumed leaker, interim stabilized 6/84.
241-B-301B	Tank Contents	241-B-301B IMUST	pH = 8.5 T 4.77 x 10-3 grams/gal PU <6.58 x 10-8 grams/gal U 1.77 x 10-5 lbs, gal T 9.01 x 102 Cs137 1.14 x 104μCi/gal in supernate PU 6.58 x 10-7 g/gal in supernate	36,000 gal	Supernate Solid	Liquid Solids	590 gal 21,660 gal	No	NA	Isolated 1985.
241-B-302B	Tank Contents	241-B-302B IMUST	B plant waste	17,684 gal	Supernate Sludge	Liquid Solids	4240 gal 690 gal	No	NA	Located at the corner of Baltimore and 7th Street, isolated 1985.
241-B-101	Tank Headspace	B-101	NA	NA	NA	Vapor	2812 cubic meters, no NH3 present	No	NA	NA
241-B-102	Tank Headspace	B-102	NA	NA	NA	Vapor	3118 cubic meters, no NH3 present	No	NA	NA
241-B-103	Tank Headspace	B-103	NA	NA	NA	Vapor	3016 cubic meters, 20 grams of NH3	No	NA	NA

Table D3.1-1. Material at Risk Table.[1] (94 sheets)

Field Name	MAR-Subject	MAR-Description	MAR-Classification	Capacity	Material Type	Physical Form	Volume or Activity	Transient	Quantity	Comments
241-B-104	Tank Headspace	B-104	NA	NA	NA	Vapor	1835 cubic meters, no NH3 present	No	NA	NA
241-B-105	Tank Headspace	B-105	NA	NA	NA	Vapor	2081 cubic meters, no NH3 present	No	NA	NA
241-B-106	Tank Headspace	B-106	NA	NA	NA	Vapor	2797 cubic meters, no NH3 present	No	NA	NA
241-B-107	Tank Headspace	B-107	NA	NA	NA	Vapor	2615 cubic meters, no NH3 present	No	NA	NA
241-B-108	Tank Headspace	B-108	NA	NA	NA	Vapor	2884 cubic meters, no NH3 present	No	NA	NA
241-B-109	Tank Headspace	B-109	NA	NA	NA	Vapor	2759 cubic meters, no NH3 present	No	NA	NA
241-B-110	Tank Headspace	B-110	NA	NA	NA	Vapor	2308 cubic meters, no NH3 present	No	NA	NA
241-B-111	Tank Headspace	B-111	NA	NA	NA	Vapor	2342 cubic meters, no NH3 present	No	NA	NA
241-B-112	Tank Headspace	B-112	NA	NA	NA	Vapor	3115 cubic meters, no NH3 present	No	NA	NA
241-B-201	Tank Headspace	B-201	NA	NA	NA	Vapor	124 cubic meters, no NH3 present	No	NA	NA
241-B-202	Tank Headspace	B-202	NA	NA	NA	Vapor	131 cubic meters, no NH3 present	No	NA	NA
241-B-203	Tank Headspace	B-203	NA	NA	NA	Vapor	40 cubic meters, no NH3 present	No	NA	NA
241-B-204	Tank Headspace	B-204	NA	NA	NA	Vapor	44 cubic meters, 2.2 grams NH3 *	No	NA	*Maximum ppm values used from data obtained 1/93 to 2/96. Accuracy of ammonia measurements may deviate 25%.
241-B-301B	Tank Headspace	241-B-301B	NA	NA	NA	Vapor	13750 gal, unknown composition	No	NA	NA
241-B-302B	Tank Headspace	241-B-302B	NA	NA	NA	Vapor	12754 gal, unknown composition	No	NA	NA

Table D3.1-1. Material at Risk Table.[1] (94 sheets)

Field Name	MAR-Subject	MAR-Description	MAR-Classification	Capacity	Material Type	Physical Form	Volume or Activity	Transient	Quantity	Comments
241-B	Rail or Truck Tanker Contents	None	NA	NA	NA	NA	NA	NA	NA	No rail or truck tankers in B Farm.
241-B	Contamination on Vehicle	None	NA	NA	NA	NA	NA	NA	NA	No contaminated vehicles in B Farm.
241-B	Contamination on Equipment or Tools	Contaminated tools possibly abandoned in pits	Possibly contaminated tools	NA	NA	Solid	Unknown	No*	NA	*Tools in pits are not expected to be easily moved.
241-B	Ventilation Filter Contents	Primary	NA	NA	NA	NA	NA	NA	NA	NA
241-B	Ventilation Filter Contents	Annulus	NA	NA	NA	NA	NA	NA	NA	NA
241-B	Ventilation Filter Contents	Breathers	NA	1 R/hr at six inches**	NA	Particulate	<100 mR/hr*	Yes, filters disposed of in accord w/ EP-0063, Rev 4 (9/93)	NA	*Not identified by East Tank Farms High/Very High Radiation Area Log as a high rad area **SAR for DSTs indicates 200 mR/hr limit on HEPA filters through administrative controls. No reference found that indicates this limit applies to SSTs. Filters are tested annually and replaced if they fail.
241-B	Contamination In Ventilation System	De-entrainer	NA	NA	NA	NA	NA	NA	NA	NA
241-B	Contamination In Ventilation System	Seal loops	Oil	< 1 gal	NA	Liquid	Residual	No	One per tank.	Seal loops associated with breather filters on all tanks.
241-B	Contents of Pipeline and/or Source Tank During Transfer	NA	NA	NA	NA	NA	NA	NA	NA	See transfer pipeline table 7.
241-B	Contents of Sump or Encasement	None*	NA	NA	NA	NA	NA	NA	NA	*No sumps present in B farm; refer to transfer pipeline Table 7 for encasements.
241-B	Contamination in Pit or Box	Pits	Residual contamination	NA	NA	Residue	NA	No	NA	Pits are all isolated and inactive.
241-B	Contamination in Pit or Box	Diversion boxes	Residual contamination	NA	NA	Residue	NA	No	NA	Diversion boxes are all isolated and inactive.

Table D3.1-1. Material at Risk Table.[1] (94 sheets)

Field Name	MAR-Subject	MAR-Description	MAR-Classification	Capacity	Material Type	Physical Form	Volume or Activity	Transient	Quantity	Comments
241-B-151	Contamination in Pit or Box	Diversion box	Residual contamination	NA	NA	Residue	NA	No	NA	Diversion boxes are all isolated and inactive.
241-B-152	Contamination in Pit or Box	Diversion box	Residual contamination	NA	NA	Residue	NA	No	NA	Diversion boxes are all isolated and inactive.
241-B-153	Contamination in Pit or Box	Diversion box	Residual contamination	NA	NA	Residue	NA	No	NA	Diversion boxes are all isolated and inactive.
241-B-154	Contamination in Pit or Box	Diversion box	Residual contamination	NA	NA	Residue	NA	No	NA	Diversion boxes are all isolated and inactive.
241-B-252	Contamination in Pit or Box	Diversion box	Residual contamination	NA	NA	Residue	NA	No	NA	Diversion boxes are all isolated and inactive.
242-B-151	Contamination in Pit or Box	Diversion box	Residual contamination	NA	NA	Residue	NA	No	NA	Diversion boxes are all isolated and inactive.
241-B	SARA 313 Materials	None	NA	NA	NA	NA	NA	NA	NA	NA
B Satellite Accumulation Area	Other	Satellite accumulation area	RCRA mixed waste	Six 55 gallon mixed waste drums (maximum)	Soil, paint waste, tank contacted, mask cartridges, HEPA filters, misc. mixed wastes possible	Solid	Low level (less than class C)	Yes	Six 55 gallon drums maximum capacity for each satellite accumulat enclosure	Inventories removed when filled; transported to 209-E 90 day storage facility.
216-B-55	Other	Crib 216-B-55	NA	NA	NA	NA	NA	NA	NA	This crib received 1,230,000,000 liters of steam condensate from 221-B. The waste is low salt and neutral/base. Currently inactive.
216-B-62	Other	Crib 216-B-62	NA	NA	NA	NA	NA	NA	NA	This crib received 282,000,000 liters of Process condensate from 221-B Separations Facilities. Currently inactive.
216-B-63	Other	Ditch 216-B-63	NA	NA	NA	NA	NA	NA	NA	This ditch received 7,220,000,000 liters of effluent from floor drains and chemical sewer wastes from 221-B, 225-B, and 271-B. Currently inactive.

Table D3.1-1. Material at Risk Table.[1] (94 sheets)

Field Name	MAR-Subject	MAR-Description	MAR-Classification	Capacity	Material Type	Physical Form	Volume or Activity	Transient	Quantity	Comments
216-B-3	Other	Pond 216-B-3	NA	NA	NA	Liquid	NA	Yes	NA	Expansion ponds still active, monitored weekly for level and inlet flow. Not in the WIDS database because they do not receive contaminated waste. They receive clean liquid such as steam condensate and cooling water.
241-BX-101	Tank Contents	BX-101	NCPLX	530 kgal	Supernate Sludge	Liquid Solid	1 kgal 42 kgal	No	NA	Assumed leaker Interim stabilized 9/78.
241-BX-102	Tank Contents	BX-102	NCPLX	530 kgal	Sludge	Solid	96 kgal	No	NA	Assumed leaker Interim stabilized 11/78.
241-BX-103	Tank Contents	BX-103	NCPLX	530 kgal	Supernate Sludge	Liquid Solid	6 kgal 62 kgal	No	NA	Interim stabilized 11/83.
241-BX-104	Tank Contents	BX-104	NCPLX	530 kgal	Supernate Sludge	Liquid Solid	3 kgal 96 kgal	No	NA	Interim stabilized 9/89.
241-BX-105	Tank Contents	BX-105	NCPLX	530 kgal	Supernate Sludge Saltcake	Liquid Solid Solid	5 kgal 43 kgal 3 kgal	No	NA	Interim stabilized 3/81 (documentation complete 9/86).
241-BX-106	Tank Contents	BX-106	NCPLX	530 kgal	Sludge	Solid	38 kgal	No	NA	Interim stabilized 8/95.
241-BX-107	Tank Contents	BX-107	NCPLX	530 kgal	Supernate Sludge	Liquid Solid	1 kgal 344 kgal	No	NA	Interim stabilized 9/90.
241-BX-108	Tank Contents	BX-108	NCPLX	530 kgal	Sludge	Solid	26 kgal	No	NA	Assumed leaker Interim stabilized 7/79.
241-BX-109	Tank Contents	BX-109	NCPLX	530 kgal	Sludge	Solid	193 kgal	No	NA	Interim stabilized 9/90.
241-BX-110	Tank Contents	BX-110	NCPLX	530 kgal	Supernate Sludge Saltcake	Liquid Solid Solid	3 kgal 195 kgal 9 kgal	No	NA	Assumed leaker Interim stabilized 8/85.
241-BX-111	Tank Contents	BX-111	NCPLX	530 kgal	Supernate Sludge Saltcake	Liquid Solid Solid	1 kgal 52 kgal 109 kgal	No	NA	Assumed leaker Interim stabilized 3/95.
241-BX-112	Tank Contents	BX-112	NCPLX	530 kgal	Supernate Sludge	Liquid Solid	1 kgal 164 kgal	No	NA	Interim stabilized 9/90.
244-BX	Tank Contents	244-BX DCRT	Saltwell pumping waste from BX, BY, and B farms	31 kgal	NA	Liquid Solid	16397 gal total, about 1200-3300 gal of sludge	No	NA	DCRT receives waste from B, BX, and BY farms.

Table D3.1-1. Material at Risk Table.[1] (94 sheets)

Field Name	MAR-Subject	MAR-Description	MAR-Classification	Capacity	Material Type	Physical Form	Volume or Activity	Transient	Quantity	Comments
241-BX-302A	Tank Contents	241-BX-302A IMUST	Drainage from diversion boxes BR-152, BX-153, BYR-152, and BXR-152 Sr90-solids 7190 µCi/gal Sr90-supernatant 719 µCi/gal Cs137-supernatant 358 µCi/gal PU - supernate 6.55 x 10-8 g/L	17684 gal	NA	Solid	835 gal	No	NA	Isolated 1985, supernatant composition refers to samples taken when there was supernatant in the tank.
241-BX-302B	Tank Contents	241-BX-302B IMUST	drainage from BX-154 diversion box	11389 gal	Supernate Solids	Liquid Solid	94 gal 950 gal	No	NA	Isolated 1985.
241-BX-302C	Tank Contents	241-BX-302C IMUST	Drainage from BX-155 diversion box	11378 gal	Supernate Solids	Liquid Solid	635 gal 228 gal	No	NA	Isolated 1985.
241-BXR-001	Tank Contents	244-BXR-001 IMUST	Metal waste slurry Sr90-solids 348220 µCi/gal Sr90-supernatant 34822 µCi/gal Cs137-supernatant 38229 µCi/gal	50,000 gal	Supernate Solids	Liquid Solid	7215 gal	No	NA	Interim stabilized 1985, supernatant composition refers to samples taken when there was supernatant in the tank.
241-BXR-002	Tank Contents	244-BXR-002 IMUST	Slurry from 244-BXR-001 mixed w/nitric acid Sr90-solids 38270 µCi/gal Sr90-supernatant 3827 µCi/gal Cs137-supernatant 1964 µCi/gal	15,000 gal	Supernate Solids	Liquid Solid	380 gal 1805 gal	No	NA	Interim stabilized 1985.

Table D3.1-1. Material at Risk Table.[1] (94 sheets)

Field Name	MAR-Subject	MAR-Description	MAR-Classification	Capacity	Material Type	Physical Form	Volume or Activity	Transient	Quantity	Comments
241-BXR-003	Tank Contents	244-BXR-003 IMUST	Slurry from 244-BXR-001 mixed w/nitric acid Sr90-solids 3174480 µCi/gal Sr90-supernatant 317448 µCi/gal Cs137-supernatant 22824 µCi/gal	15,000 gal	Supernate Solids	Liquid Solid	356 gal 1449 gal	No	NA	Interim stabilized 1985.
241-BXR-011	Tank Contents	244-BXR-011 IMUST	Acid solutions from 244-BXR-002 and 244-BXR-003 Sr90-solids 183673 µCi/gal Sr90-supernatant 18367 µCi/gal Cs137-solids 72795 µCi/gal Cs137-supernatant 727950 µCi/gal PU - solids 3.78 x 10-7 g/g @ 0.564 g/mL	50,000 gal	Supernate Solids	Liquid Solid	98 gal 7020 gal	No	NA	Interim stabilized 1985.
241-BX-101	Tank Headspace	BX-101	NA	NA	NA	Vapor	3077 cubic meters, no NH3 present	No	NA	NA
241-BX-102	Tank Headspace	BX-102	NA	NA	NA	Vapor	2876 cubic meters, no NH3 present	No	NA	NA
241-BX-103	Tank Headspace	BX-103	NA	NA	NA	Vapor	2982 cubic meters, no NH3 present	No	NA	NA
241-BX-104	Tank Headspace	BX-104	NA	NA	NA	Vapor	2876 cubic meters, 520 g NH3	No	NA	NA
241-BX-105	Tank Headspace	BX-105	NA	NA	NA	Vapor	3046 cubic meters, no NH3 present	No	NA	NA
241-BX-106	Tank Headspace	BX-106	NA	NA	NA	Vapor	3065 cubic meters, no NH3 present	No	NA	NA

Table D3.1-1. Material at Risk Table.[1] (94 sheets)

Field Name	MAR-Subject	MAR-Description	MAR-Classification	Capacity	Material Type	Physical Form	Volume or Activity	Transient	Quantity	Comments
241-BX-107	Tank Headspace	BX-107	NA	NA	NA	Vapor	1934 cubic meters, no NH3 present	No	NA	NA
241-BX-108	Tank Headspace	BX-108	NA	NA	NA	Vapor	3141 cubic meters, no NH3 present	No	NA	NA
241-BX-109	Tank Headspace	BX-109	NA	NA	NA	Vapor	2509 cubic meters, no NH3 present	No	NA	NA
241-BX-110	Tank Headspace	BX-110	NA	NA	NA	Vapor	2456 cubic meters, no NH3 present	No	NA	NA
241-BX-111	Tank Headspace	BX-111	NA	NA	NA	Vapor	2626 cubic meters, no NH3 present	No	NA	NA
241-BX-112	Tank Headspace	BX-112	NA	NA	NA	Vapor	2615 cubic meters, no NH3 present	No	NA	NA
244-BX	Tank Headspace	244-BX DCRT	NA	NA	NA	Vapor	Unknown	No	NA	No data on tank headspace available.
241-BX-302A	Tank Headspace	241-BX-302A IMUST	NA	NA	NA	Vapor	16849 gal unknown composition	No	NA	No data on tank headspace composition available.
241-BX-302B	Tank Headspace	241-BX-302B IMUST	NA	NA	NA	Vapor	10345 gal unknown composition	No	NA	No data on tank headspace composition available.
241-BX-302C	Tank Headspace	241-BX-302C IMUST	NA	NA	NA	Vapor	10515 gal unknown composition	No	NA	No data on tank headspace composition available.
241-BX-001	Tank Headspace	244-BXR-001 IMUST	NA	NA	NA	Vapor	42785 gal unknown composition	No	NA	No data on tank headspace composition available.
241-BX-002	Tank Headspace	244-BXR-002 IMUST	NA	NA	NA	Vapor	12815 gal unknown composition	No	NA	No data on tank headspace composition available.
241-BX-003	Tank Headspace	244-BXR-003 IMUST	NA	NA	NA	Vapor	13195 gal unknown composition	No	NA	No data on tank headspace composition available.
241-BXR-011	Tank Headspace	244-BXR-011 IMUST	NA	NA	NA	Vapor	42882 gal unknown composition	No	NA	No data on tank headspace composition available.
241-BX	Rail or Truck Tanker Contents	None	NA	NA	NA	NA	NA	NA	NA	No rail or truck tanker in BX Farm.
241-BX	Contamination on Vehicle	None	NA	NA	NA	NA	NA	NA	NA	No contaminated vehicles stored near BX Farm.
241-BX	Contamination on Equipment or Tools	Abandoned tools possibly in tank pits	Possibly contaminated tools	NA	NA	Solid	Unknown	No *	NA	*Tools not expected to be easily removed from pits.

Table D3.1-1. Material at Risk Table.[1] (94 sheets)

Field Name	MAR-Subject	MAR-Description	MAR-Classification	Capacity	Material Type	Physical Form	Volume or Activity	Transient	Quantity	Comments
241-BX	Ventilation Filter Contents	Primary	NA	NA	NA	NA	NA	NA	NA	NA
241-BX	Ventilation Filter Contents	Annulus	NA	NA	NA	NA	NA	NA	NA	NA
241-BX	Ventilation Filter Contents	Breather	NA	1 R/hr at six inches**	NA	Particu-late	<100 mR/hr*	Yes, filters disposed of in accord w/ EP-0063, Rev 4 (9/93)	NA	*Not identified by East Tank Farms High/Very High Radiation Area Log as a high rad area **SAR for DSTs indicates 200 mR/hr limit on HEPA filters through administrative controls. No reference found that indicates this limit applies to SSTs. Filters are tested annually for efficiency and replaced if they fail.
241-BX	Ventilation Filter Contents	Filter on vent system for DCRT 244-BX	NA	1 R/hr at six inches**	NA	Particu-late	<100 mR/hr*	Yes	NA	*Not identified by East Tank Farms High/Very High Radiation Area Log as a high rad area **SAR for DSTs indicates 200 mR/hr limit on HEPA filters through administrative controls. No reference found that indicates this limit applies to SSTs. Filters are tested annually for efficiency and replaced if they fail.
241-BX	Contamination In Ventilation System	De-entrainer	NA	NA	NA	NA	NA	NA	NA	No de-entrainer.
241-BX	Contamination In Ventilation System	Seal loops for breathers	Oil	<1 gal	NA	Liquid	Residual	No	One per tank.	Seal loops associated with breather filters on all tanks.
241-BX	Contents of Pipeline and/or Source Tank During Transfer	NA	NA	NA	NA	NA	NA	NA	NA	See transfer line Table 7.

Table D3.1-1. Material at Risk Table.[1] (94 sheets)

Field Name	MAR-Subject	MAR-Description	MAR-Classification	Capacity	Material Type	Physical Form	Volume or Activity	Transient	Quantity	Comments
241-BX	Contents of Sump or Encasement	DCRT vault**	NA	41,000 gal*	NA	NA	NA	No	NA	*Volume of vault = (44' x 16' x 13'7") - volume of the tank DCRT is used as saltwell receiver. **Vault serves as "encasement" for the DCRT.
241-BX	Contamination in Pit or Box	Pump, sluice, heel, and condenser pits	Residual contamination	NA	NA	Residue	NA	No	NA	All pump, sluice, heel, and condenser pits are weather covered in BX Farm.
241-BX	Contamination in Pit or Box	Raw water service pit	Water	1450 gal (7' diameter x 5')	NA	Liquid	NA	No	NA	Service pit provides raw water to BX and BY Farms for saltwell pumping.
241-BX	Contamination in Pit or Box	Saltwell pumping pits*	Residual contamination	1050 gal (6' diameter x 5') on BX-107 and BX-109 and 740 gal (5' diameter x 5') on BX-110, BX-111, and BX-112	NA	Residue	NA	No	NA	*Saltwell pump pits Not isolated on tanks BX-107, 109-112 only.
244-BX	Contamination in Pit or Box	244-BX DCRT pump pit	Residual contamination	23,000 gal (19' x 17' x 9'-6")	NA	Residue	NA	No	NA	NA
244-BX	Contamination in Pit or Box	244-BX DCRT filter pit	Residual contamination	13,300 gal (11' x 17' x 9'-6")	NA	Residue	NA	No	NA	Filters discussed separately.
244-BX	Contamination in Pit or Box	244-BX DCRT instrument pit	Residual contamination	800 gal (4' diameter x 8'-4")	NA	Residue	NA	No	NA	NA
241-BXR-151	Contamination in Pit or Box	Diversion box	Residual contamination	NA	NA	Residue	NA	No	NA	Diversion boxes in BX Farm are all isolated and inactive.
241-BXR-152	Contamination in Pit or Box	Diversion box	Residual contamination	NA	NA	Residue	NA	No	NA	Diversion boxes in BX Farm are all isolated and inactive.
241-BXR-153	Contamination in Pit or Box	Diversion box	Residual contamination	NA	NA	Residue	NA	No	NA	Diversion boxes in BX Farm are all isolated and inactive.
241-BX	SARA 313 Materials	Gas bottles for PCM1B	90% argon / 10% methane	480 cubic feet	NA	Gas	480 cubic ft	Yes	2 bottles	NA

Table D3.1-1. Material at Risk Table.[1] (94 sheets)

Field Name	MAR-Subject	MAR-Description	MAR-Classification	Capacity	Material Type	Physical Form	Volume or Activity	Transient	Quantity	Comments
BX Satellite Accumulation Area	Other	Satellite accumulation area	RCRA mixed waste	Six 55 gallon mixed waste drums (maximum)	Soil, paint waste, tank contacted, mask cartridges, HEPA filters, misc. mixed wastes possible	Solid	Low level (less than class C)	Yes	Six 55 gallon drums maximum capacity for each satellite accumulat enclosure	Inventories removed when filled; transported to 209-E 90 day storage facility.
241-BX	Other	Large tank of phosphoric acid west of BX-112	Phosphoric acid	1000 gallons estimated	NA	Liquid	100 gallon heel / unknown	Yes*	1 tank	*Tank scheduled for removal by WHC Operations.
241-BY-101	Tank Contents	BY-101	NCPLX	758,000	Sludge Saltcake	Solid Solid	109 kgal 278 kgal	No	NA	Interim stabilized 5/84.
241-BY-102	Tank Contents	BY-102	NCPLX	758,000	Saltcake	Solid	277 kgal	No	NA	Interim stabilized 4/95.
241-BY-103	Tank Contents	BY-103	NCPLX	758,000	Sludge Saltcake	Solid Solid	5 kgal 409 kgal	No	NA	Assumed leaker, interim stabilized 11/97.
241-BY-104	Tank Contents	BY-104	NCPLX	758,000	Sludge Saltcake	Solid Solid	40 kgal 366 kgal	No	NA	Interim stabilized 1/85.
241-BY-105	Tank Contents	BY-105	NCPLX	758,000	Sludge Saltcake	Solid Solid	44 kgal 459 kgal	No	NA	Assumed leaker BY-105 has had cement added. It may be pumped further in the future.
241-BY-106	Tank Contents	BY-106	NCPLX	758,000	Sludge Saltcake	Solid Solid	95 kgal 547 kgal	No	NA	Assumed leaker BY-106 is being pumped.
241-BY-107	Tank Contents	BY-107	NCPLX	758,000	Sludge Saltcake	Solid Solid	60 kgal 206 kgal	No	NA	Assumed leaker, interim stabilized 7/79.
241-BY-108	Tank Contents	BY-108	NCPLX	758,000	Sludge Saltcake	Solid Solid	154 kgal 74 kgal	No	NA	Assumed leaker, interim stabilized 2/85.
241-BY-109	Tank Contents	BY-109	NCPLX	758,000	Sludge Saltcake	Solid Solid	83 kgal 340 kgal	No	NA	BY-109 is being pumped.
241-BY-110	Tank Contents	BY-110	NCPLX	758,000	Sludge Saltcake	Solid Solid	103 kgal 295 kgal	No	NA	Interim stabilized 1/85.
241-BY-111	Tank Contents	BY-111	NCPLX	758,000	Sludge Saltcake	Solid Solid	21 kgal 438 kgal	No	NA	Interim stabilized 1/85.
241-BY-112	Tank Contents	BY-112	NCPLX	758,000	Sludge Saltcake	Solid Solid	5 kgal 286 kgal	No	NA	Interim stabilized 6/84.

Table D3.1-1. Material at Risk Table.[1] (94 sheets)

Field Name	MAR-Subject	MAR-Description	MAR-Classification	Capacity	Material Type	Physical Form	Volume or Activity	Transient	Quantity	Comments
16-BY-201	Tank Contents	216-BY-201 IMUST	See comments	Unknown	Unknown	Unknown	Unknown	No	NA	This tank received waste from 241-BY Farm and the Tri-butyl Phosphate Waste Line. Leaked waste to the ground in 1955.
241-BY-101	Tank Headspace	BY-101	NA	NA	NA	Vapor	2517 cubic meters, no NH3 present	No	NA	NA
241-BY-102	Tank Headspace	BY-102	NA	NA	NA	Vapor	2933 cubic meters, no NH3 present	No	NA	NA
241-BY-103	Tank Headspace	BY-103	NA	NA	NA	Vapor	2467 cubic meters, 49 g NH3	No	NA	NA
241-BY-104	Tank Headspace	BY-104	NA	NA	NA	Vapor	2445 cubic meters, 470 g NH3	No	NA	NA
241-BY-105	Tank Headspace	BY-105	NA	NA	NA	Vapor	2078 cubic meters, 69 / 71 g NH3	No	NA	Tank may be pumped in the future; headspace will change.
241-BY-106	Tank Headspace	BY-106	NA	NA	NA	Vapor	1551 cubic meters, 88 g NH3	No	NA	Tank is being pumped; headspace will change.
241-BY-107	Tank Headspace	BY-107	NA	NA	NA	Vapor	2975 cubic meters, 2200 g NH3	No	NA	NA
241-BY-108	Tank Headspace	BY-108	NA	NA	NA	Vapor	3118 cubic meters, 2500 / 830 g NH3	No	NA	NA
241-BY-109	Tank Headspace	BY-109	NA	NA	NA	Vapor	2380 cubic meters, no NH3 present	No	NA	Tank is being pumped; headspace will change.
241-BY-110	Tank Headspace	BY-110	NA	NA	NA	Vapor	2475 cubic meters, 740 / 510 g NH3	No	NA	NA
241-BY-111	Tank Headspace	BY-111	NA	NA	NA	Vapor	2244 cubic meters, 100 g NH3	No	NA	NA
241-BY-112	Tank Headspace	BY-112	NA	NA	NA	Vapor	2880 cubic meters, 140 g NH3	No	NA	NA
216-BY-201	Tank Headspace	216-BY-201	Unknown	NA	Unknown	Vapor	Unknown	No	NA	No data available.
241-BY	Rail or Truck Tanker Contents	None	NA	NA	NA	NA	NA	NA	NA	No rail or truck tankers in BY Farm.
241-BY	Contamination on Vehicle	None	NA	NA	NA	NA	NA	NA	NA	No contaminated vehicles stored near BY Farm.

Table D3.1-1. Material at Risk Table.[1] (94 sheets)

Field Name	MAR-Subject	MAR-Description	MAR-Classification	Capacity	Material Type	Physical Form	Volume or Activity	Transient	Quantity	Comments
241-BY	Contamination on Equipment or Tools	Asbestos covered evaporator near BY-101, radioactively contaminated	Contaminated equipment	NA	NA	Solid	Unknown	Yes	NA	Commonly called "the big pink thing".
241-BY	Contamination on Equipment or Tools	Several 30' long, 4-5' diameter caissons w/contaminated equipment inside (above ground)	Contaminated equipment	NA	NA	Solid	Unknown	Yes	NA	NA
241-BY	Contamination on Equipment or Tools	Abandoned contaminated tools possibly in pits	Contaminated tools	NA	NA	Solids	Unknown	No*	NA	*Tools not expected to be easily removed from pits
241-BY	Ventilation Filter Contents	Primary	NA	NA	NA	NA	NA	NA	NA	NA
241-BY	Ventilation Filter Contents	Annulus	NA	NA	NA	NA	NA	NA	NA	NA
241-BY	Ventilation Filter Contents	Breather	NA	1 R/hr at six inches**	NA	Particulate	<100 mR/hr on all tanks except possibly BY-101, 102, 105, and 109 which are on the West Tank Farm Shift Office High Radiation Area Key Assignment List (Not sure if this means the breather filters, No exact rad numbers provided	Yes, Disposed of in accord w/ EP-0063, Rev 4 (9/93)	NA	**SAR for DSTs indicates 200 mR/hr limit on HEPA filters through administrative controls. No reference found that indicates this limit applies to SSTs. Filter efficiency is tested annually and filters are replaced if they fail.
241-BY	Contamination In Ventilation System	De-entrainer	NA	NA	NA	NA	NA	NA	NA	No de-entrainer.
241-BY	Contamination In Ventilation System	Seal loops for breathers	oil	<1 gal	NA	Liquid	Residual	No	One per tank	Seal loops associated with breather filters on all tanks.

Table D3.1-1. Material at Risk Table.[1] (94 sheets)

Field Name	MAR-Subject	MAR-Description	MAR-Classification	Capacity	Material Type	Physical Form	Volume or Activity	Transient	Quantity	Comments
241-BY	Contents of Pipeline and/or Source Tank During Transfer	NA	NA	NA	NA	NA	NA	NA	NA	See transfer line Table 7.
241-BY	Contents of Sump or Encasement	NA	NA	NA	NA	NA	NA	NA	NA	No known sumps with material inventory in BY Farm. See transfer line Table 7 for discussion of encasements.
241-BY	Contamination in Pit or Box	Saltwell pump pits	Residual contamination	6000 gal (14.5' x 11' x 5') for tanks BY-102, 103, 105, 106 6400 gal (17' x 11' x 4'-7") for BY-109	NA	Residue	NA	No	NA	Pump pits (saltwell pumping) are active (not weather covered) on tanks BY-102, 103, 105, 106, and 109.
241-BY	Contamination in Pit or Box	All other pits in BY Farm	Residual contamination	NA	NA	Residue	NA	No	NA	All pits except pump pits noted above are weather covered
241-BYR-152	Contamination in Pit or Box	Diversion box	Residual contamination	NA	NA	Residue	NA	No	NA	Diversion boxes are all isolated and weather covered.
241-BYR-153	Contamination in Pit or Box	Diversion box	Residual contamination	NA	NA	Residue	NA	No	NA	Diversion boxes are all isolated and weather covered.
241-BYR-154	Contamination in Pit or Box	Diversion box	Residual contamination	NA	NA	Residue	NA	No	NA	Diversion boxes are all isolated and weather covered.
241-BYR-155	Contamination in Pit or Box	Diversion box	Residual contamination	NA	NA	Residue	NA	No	NA	Diversion boxes are all isolated and weather covered.
241-BY	SARA 313 Materials	Gas bottles for SHMS*	Hydrogen / nitrogen mixture	480 cubic feet	NA	Gas	480 cubic feet	Yes	3 bottles per tank*	*Only on tanks BY-103, BY-106, and BY-109.
241-BY	Other	None	NA	NA	NA	NA	NA	NA	NA	NA
241-C-101	Tank Contents	C-101	NCPLX	530 kgal	Sludge	Solid	88 kgal	No	NA	Assumed leaker, interim stabilized 11/83.
241-C-102	Tank Contents	C-102	DC	530 kgal	Sludge	Solid	316 kgal	No	NA	Interim stabilized 9/95.
241-C-103	Tank Contents	C-103	NCPLX	530 kgal	Supernate Sludge	Liquid Solid	133 kgal 62 kgal	No	NA	C-103 will be pumped in the future.
241-C-104	Tank Contents	C-104	CC	530 kgal	Sludge	Solid	295 kgal	No	NA	Interim stabilized 9/89.

Table D3.1-1. Material at Risk Table.[1] (94 sheets)

Field Name	MAR-Subject	MAR-Description	MAR-Classification	Capacity	Material Type	Physical Form	Volume or Activity	Transient	Quantity	Comments
241-C-105	Tank Contents	C-105	NCPLX	530 kgal	Supernate Sludge	Liquid Solid	2 kgal 132 kgal	No	NA	Interim stabilized 10/95.
241-C-106	Tank Contents	C-106	NCPLX	530 kgal	Supernate Sludge	Liquid Solid	32 kgal 197 kgal	No	NA	C-106 will be sluiced in the future. Treated cooling water (pH 9-10) is added to tank, about 6000 gallons/month.
241-C-107	Tank Contents	C-107	DC	530 kgal	Sludge	Solid	237 kgal	No	NA	Interim stabilized 8/95.
241-C-108	Tank Contents	C-108	NCPLX	530 kgal	Sludge	Solid	66 kgal	No	NA	Interim stabilized 3/84.
241-C-109	Tank Contents	C-109	NCPLX	530 kgal	Supernate Sludge	Liquid Solid	4 kgal 62 kgal	No	NA	Interim stabilized 11/83.
241-C-110	Tank Contents	C-110	DC	530 kgal	Supernate Sludge	Liquid Solid	1 kgal 177 kgal	No	NA	Assumed leaker, interim stabilized 5/95.
241-C-111	Tank Contents	C-111	NCPLX	530 kgal	Sludge	Solid	57 kgal	No	NA	Assumed leaker, interim stabilized 3/84.
241-C-112	Tank Contents	C-112	NCPLX	530 kgal	Sludge	Solid	104 kgal	No	NA	Interim stabilized 9/90.
241-C-201	Tank Contents	C-201	NCPLX	55 kgal	Sludge	Solid	2 kgal	No	NA	Assumed leaker, interim stabilized 3/82.
241-C-202	Tank Contents	C-202	EMPTY	55 kgal	Sludge	Solid	1 kgal	No	NA	Assumed leaker, interim stabilized 8/81.
241-C-203	Tank Contents	C-203	NCPLX	55 kgal	Sludge	Solid	5 kgal	No	NA	Assumed leaker, interim stabilized 3/82.
241-C-204	Tank Contents	C-204	NCPLX	55 kgal	Sludge	Solid	3 kgal	No	NA	Assumed leaker, interim stabilized 9/82.
244-CR	Tank Contents	CR vault tank 001	Unknown	50 kgal	Unknown	Unknown	Unknown	No	NA	Inactive. No data on tank contents obtained.
244-CR	Tank Contents	CR vault tank 002	Unknown	15 kgal	Unknown	Unknown	Unknown	No	NA	Inactive. No data on tank contents obtained.
244-CR	Tank Contents	CR vault tank 003	Saltwell waste from C farm (C-102, C-107, C-110	15 kgal	NA	Liquid Solid	4653 gal total	No	NA	This is the only CR Vault tank still in use. Amount of solids in tank unknown.
244-CR	Tank Contents	CR vault tank 011	Unknown	50 kgal	Unknown	Unknown	Unknown	No	NA	Inactive. No data on tank contents obtained. Transfer from Hot Semi Works to tank recorded around 1978.

Table D3.1-1. Material at Risk Table.[1] (94 sheets)

Field Name	MAR-Subject	MAR-Description	MAR-Classification	Capacity	Material Type	Physical Form	Volume or Activity	Transient	Quantity	Comments
241-C-301C	Tank Contents	241-C-301C IMUST	pH 9.3, T 6.09 x 102, PU <6.58 g/gal, U 5.0 x 10-4 lbs/gal, T 1.7 x 103 µCi/gal, Cs134 1.47 x 102 µCi/gal Cs137-super 2.55 x 104 µCi/gal Sr90-Solids 17000 µCi/gal Sr90-super. 1700 µCi/gal Pu-super. 6.58 x 10-7 g/gal	36 kgal	Supernate Sludge	Liquid Solid	1470 gal 9016 gal	No	NA	Isolated.
241-C-101	Tank Headspace	C-101	NA	NA	NA	Vapor	2906 cubic meters, 220 g NH3	No	NA	NA
241-C-102	Tank Headspace	C-102	NA	NA	NA	Vapor	2043 cubic meters, 286 g NH3	No	NA	NA
241-C-103	Tank Headspace	C-103	NA	NA	NA	Vapor	2501 cubic meters, 540 g NH3*	No	NA	Tank C-103 will be pumped in the future; headspace will change. *Insufficient data to correct for temperature. A temperature of 11C assumed where no data exists.
241-C-104	Tank Headspace	C-104	NA	NA	NA	Vapor	2123 cubic meters, 70 g NH3	No	NA	NA
241-C-105	Tank Headspace	C-105	NA	NA	NA	Vapor	2728 cubic meters, 5.2 g NH3	No	NA	NA
241-C-106	Tank Headspace	C-106	NA	NA	NA	Vapor	2373 cubic meters, 4.5 g NH3	No	NA	Tank C-106 will be sluiced in the future; headspace will change.
241-C-107	Tank Headspace	C-107	NA	NA	NA	Vapor	2342 cubic meters, 150 g NH3	No	NA	NA
241-C-108	Tank Headspace	C-108	NA	NA	NA	Vapor	2990 cubic meters, 6 g NH3	No	NA	NA
241-C-109	Tank Headspace	C-109	NA	NA	NA	Vapor	3005 cubic meters, 23 g NH3	No	NA	NA
241-C-110	Tank Headspace	C-110	NA	NA	NA	Vapor	2570 cubic meters, 240 g NH3	No	NA	NA

Table D3.1-1. Material at Risk Table.[1] (94 sheets)

Field Name	MAR-Subject	MAR-Description	MAR-Classification	Capacity	Material Type	Physical Form	Volume or Activity	Transient	Quantity	Comments
241-C-111	Tank Headspace	C-111	NA	NA	NA	Vapor	3024 cubic meters, 130 g NH3	No	NA	NA
241-C-112	Tank Headspace	C-112	NA	NA	NA	Vapor	2846 cubic meters, 48 g NH3	No	NA	NA
241-C-201	Tank Headspace	C-201	NA	NA	NA	Vapor	226 cubic meters, no NH3 present	No	NA	NA
241-C-202	Tank Headspace	C-202	NA	NA	NA	Vapor	230 cubic meters, no NH3 present	No	NA	NA
241-C-203	Tank Headspace	C-203	NA	NA	NA	Vapor	215 cubic meters, no NH3 present	No	NA	NA
241-C-204	Tank Headspace	C-204	NA	NA	NA	Vapor	222 cubic meters, no NH3 present	No	NA	NA
244-CR	Tank Headspace	CR vault tank 001	NA	NA	NA	NA	NA	NA	NA	No headspace data available.
244-CR	Tank Headspace	CR vault tank 002	NA	NA	NA	NA	NA	NA	NA	No headspace data available.
244-CR	Tank Headspace	CR vault tank 003	NA	NA	NA	NA	NA	NA	NA	No headspace data available. This is the only CR vault tank currently in use.
244-CR	Tank Headspace	CR vault tank 011	NA	NA	NA	NA	NA	NA	NA	No headspace data available.
241-C-301C	Tank Headspace	241-C-301C IMUST	NA	NA	NA	Vapor	22514 gal, unknown composition	No	NA	No headspace data available.
241-C	Rail or Truck Tanker Contents	None	NA	NA	NA	NA	NA	NA	NA	No rail or truck tankers in C Farm.
241-C	Contamination on Vehicle	None	NA	NA	NA	NA	NA	NA	NA	No contaminated vehicles stored in C Farm.
241-C	Contamination on Equipment or Tools	Contaminated tools or jumpers possibly abandoned in pits	Contaminated tools, jumpers	NA	NA	Solid	Unknown	No*	NA	*Tools are not expected to be easily moved from pits.
241-C	Contamination on Equipment or Tools	Contaminated equipment stored near C-301C IMUST	Contaminated equipment	NA	NA	Solid	Unknown	Yes	NA	Boxes and drums with contaminated materials

Table D3.1-1. Material at Risk Table.[1] (94 sheets)

Field Name	MAR-Subject	MAR-Description	MAR-Classification	Capacity	Material Type	Physical Form	Volume or Activity	Transient	Quantity	Comments
241-C	Ventilation Filter Contents	Primary - C-105/C-106 exhaust system	NA	1 R/hr at six inches**	NA	Particu-late	<100 mR/hr*, 70 mR/hr on top of C-105 inlet filter	Yes, filters disposed of in accord w/ EP-0063, Rev 4 (9/93)	NA	*Not identified by East Tank Farms High/Very High Radiation Area Log as a high rad area (except C-105 inlet filter) **SAR for DSTs indicates 200 mR/hr limit on HEPA filters through administrative controls. No reference found that indicates this limit applies to SSTs.
241-C	Ventilation Filter Contents	Annulus exhaust	NA	NA	NA	NA	NA	NA	NA	NA
241-C	Ventilation Filter Contents	Breathers	NA	1 R/hr at six inches**	NA	Particu-late	<100 mR/hr*	Yes, filters disposed of in accord w/ EP-0063, Rev 4 (9/93)	NA	*Not identified by East Tank Farms High/Very High Radiation Area Log as a high rad area **SAR for DSTs indicates 200 mR/hr limit on HEPA filters through administrative controls. No reference found that indicates this limit applies to SSTs. Filter efficiency is tested annually and filters are replaced if they fail.
244-CR	Ventilation Filter Contents	244-CR vault vent system filters	NA	1 R/hr at six inches**	NA	Particu-late	Unknown	Yes, filters disposed of in accord w/ EP-0063, Rev 4 (9/93)	NA	**SAR for DSTs indicates 200 mR/hr limit on HEPA filters through administrative controls. No reference found that indicates this limit applies to CR vault. Filter efficiency is tested annually and filters are replaced if they fail.
241-C	Contamination In Ventilation System	De-entrainer	Process condensate	NA	NA	Liquid	Residual	No	NA	For the C-105/C-106 exhaust system.
241-C	Contamination In Ventilation System	Seal loops	Condensate	<1 gal	NA	Liquid	Residual	No	One per tank, except C-105 and C-106	Seal loops on breather filters for all tanks except C-105 and C-106.

Table D3.1-1. Material at Risk Table.[1] (94 sheets)

Field Name	MAR-Subject	MAR-Description	MAR-Classification	Capacity	Material Type	Physical Form	Volume or Activity	Transient	Quantity	Comments
241-C	Contents of Pipeline and/or Source Tank During Transfer	NA	NA	NA	NA	NA	NA	NA	NA	See transfer line study.
244-CR	Contents of Sump or Encasement	CR vault space (including sump)	Residual contamination, standing liquid possible	About 74,000 gal (2 large vaults) and about 30,000 gal (2 smaller vaults)*	NA	Residue and possibly liquid	Unknown	No	4 vaults	*Capacity of vaults = volume of vault - volume of tank in vault. Large vaults are 22' x 26' x 29', small vaults are 16' x 20' x 19'. Each vault also has a small sump, 2' x 3' x 1', standing liquid in sumps possible.
244-CR	Contents of Sump or Encasement	CR vault filter pit sump	Residual contamination	About 30 gal (2'-10" square x 6" deep)	NA	Residue	NA	No	1	NA
241-C	Contamination in Pit or Box	Inactive pits*	Residual contamination	NA	NA	Residue	NA	No	NA	*All pits except those noted below are isolated and inactive.
241-C	Contamination in Pit or Box	Pump pits*	Residual contamination	10,000 gal (11' x 14'-6" x 8'-8"	NA	Residue	NA	No	NA	*Pump pits not isolated on C-102, C-103, C-105, and C-106. Isolated on tanks C-104 and C-101. See saltwell pump pits for C-107 through C-112.
241-C	Contamination in Pit or Box	Heel pits*	Residual contamination	2000 gal (9' x 6' x 4'-10")	NA	Residue	NA	No	NA	*Isolated on tanks C-101 and C-104. C-105 is weather covered. Only expected to be used on C-103 (for saltwell pumping) and possibly C-106 in the future.
241-C	Contamination in Pit or Box	Saltwell pump pits*	Residual contamination	1000 gal (6' dia x 5' deep)	NA	Residue	NA	No	NA	*Only potentially active (not weather covered) on C-107, 110, and 112 (see heel pits above). C-110 and C-112 not expected to be used.
241-C	Contamination in Pit or Box	Sluice pit*	Residual contamination	4000 gal (9' x 8'-6" x 7')	NA	Residue	NA	No	NA	*Potentially active on C-106, which will be sluiced.
241-C	Contamination in Pit or Box	Valve pit 241-C	Residual contamination	5600 gal (10' dia x 9'-6")	NA	Residue	NA	No	NA	May be used in the future for pumping C-103.
241-C	Contamination in Pit or Box	Raw water service pit	Raw water	NA	NA	Liquid	NA	No	NA	Service pit only has raw water in it. No longer in use.

Table D3.1-1. Material at Risk Table.[1] (94 sheets)

Field Name	MAR-Subject	MAR-Description	MAR-Classification	Capacity	Material Type	Physical Form	Volume or Activity	Transient	Quantity	Comments
244-CR	Contamination in Pit or Box	CR vault pump pits (one each above CR-011 and CR-001)	Residual contamination	30,000 gal (26' x 8' x 19'-4")	NA	Residue	NA	No	NA	NA
244-CR	Contamination in Pit or Box	CR vault pump pit (one above CR-002 and CR-003)	Residual contamination	48,600 gal (42' x 8' x 19'-4")	NA	Residue	NA	No	NA	NA
244-CR	Contamination in Pit or Box	CR vault filter pit	Residual contamination	9500 gal (11'-8" x 11'-10" x 9'-2")	NA	Residue	NA	No	NA	NA
244-CR	Contamination in Pit or Box	CR vault access pits	Residual contamination	One at 1400 gal (7'-8" x 5' x 5'), one at 1500 gal (7'10" x 5' x 5'), and two at 800 (6'10" x 3' x 5')	NA	Residue	NA	No	NA	1400 gal pit associated with CR-011, 1500 gal pit associated with CR-001, smaller pits associated with CR-002 and CR-003.
241-C	Contamination in Pit or Box	Diversion boxes	Residual contamination	NA	NA	Residue	NA	No	NA	All diversion boxes are isolated and inactive.
241-C-151	Contamination in Pit or Box	Diversion box	Residual contamination	NA	NA	Residue	NA	No	NA	All diversion boxes are isolated and inactive.
241-C-152	Contamination in Pit or Box	Diversion box	Residual contamination	NA	NA	Residue	NA	No	NA	All diversion boxes are isolated and inactive.
241-C-153	Contamination in Pit or Box	Diversion box	Residual contamination	NA	NA	Residue	NA	No	NA	All diversion boxes are isolated and inactive.
241-C-154	Contamination in Pit or Box	Diversion box	Residual contamination	NA	NA	Residue	NA	No	NA	All diversion boxes are isolated and inactive.
241-C-252	Contamination in Pit or Box	Diversion box	Residual contamination	NA	NA	Residue	NA	No	NA	All diversion boxes are isolated and inactive.
241-CR-151	Contamination in Pit or Box	Diversion box	Residual contamination	NA	NA	Residue	NA	No	NA	All diversion boxes are isolated and inactive.
241-CR-152	Contamination in Pit or Box	Diversion box	Residual contamination	NA	NA	Residue	NA	No	NA	All diversion boxes are isolated and inactive.
241-CR-153	Contamination in Pit or Box	Diversion box	Residual contamination	NA	NA	Residue	NA	No	NA	All diversion boxes are isolated and inactive.
241-C	SARA 313 Materials	Gas bottles for PCM1B	90% argon / 10% methane	480 cubic feet	NA	Gas	480 cubic ft	Yes	2 bottles	NA

Table D3.1-1. Material at Risk Table.[1] (94 sheets)

Field Name	MAR-Subject	MAR-Description	MAR-Classification	Capacity	Material Type	Physical Form	Volume or Activity	Transient	Quantity	Comments
C Satellite Accumulation Area	Other	Satellite accumulation area	RCRA mixed waste	Six 55 gallon mixed waste drums (maximum)	Soil, paint waste, tank contacted, mask cartridges, HEPA filters, misc. mixed wastes possible	Solid	Low level (less than class C)	Yes	Six 55 gallon drums maximum capacity for each satellite accumulat enclosure	Inventories removed when filled; transported to 209-E 90 day storage facility.
241-C	Other	Gas bottles*	Acetylene*	480 cubic feet	NA	Gas	480 cubic feet	Yes	2 bottles	*Two gas bottles of unknown contents were located within a construction area near C-106 (assumed to be acetylene for welding).
241-S-101	Tank Contents	241-S-101	NCPLX	758 Kgal	Supernate Sludge Saltcake	Liquid Solid Solid	12 Kgal 244 Kgal 171 Kgal	No	NA	Scheduled completion of interim stabilization 8/30/97.
241-S-102	Tank Contents	241-S-102	DSSF	758 Kgal	Sludge Saltcake	Solid Solid	4 Kgal 545 Kgal	No	NA	Scheduled completion of interim stabilization 1/31/99.
241-S-103	Tank Contents	241-S-103	DSSF	758 Kgal	Supernate Sludge Saltcake	Liquid Solid Solid	17 Kgal 10 Kgal 221 Kgal	No	NA	Scheduled completion of interim stabilization 8/31/98.
241-S-104	Tank Contents	241-S-104	NCPLX	758 Kgal	Supernate Sludge	Liquid Solid	1 Kgal 293 Kgal	No	NA	Assumed leaker Interim stabilized 12/84.
241-S-105	Tank Contents	241-S-105	NCPLX	758 Kgal	Sludge Saltcake	Solid Solid	2 Kgal 454 Kgal	No	NA	Interim stabilized 9/88.
241-S-106	Tank Contents	241-S-106	NCPLX	758 Kgal	Supernate Sludge Saltcake	Liquid Solid Solid	4 Kgal 28 Kgal 447 Kgal	No	NA	Scheduled completion of interim stabilization 11/30/98.
241-S-107	Tank Contents	241-S-107	NCPLX	758 Kgal	Supernate Sludge Saltcake	Liquid Solid Solid	14 Kgal 293 Kgal 69 Kgal	No	NA	Scheduled completion of interim stabilization 4/30/99.
241-S-108	Tank Contents	241-S-108	NCPLX	758 Kgal	Sludge Saltcake	Solid Solid	4 Kgal 600 Kgal	No	NA	Scheduled completion of interim stabilization 2/28/97.
241-S-109	Tank Contents	241-S-109	NCPLX	758 Kgal	Sludge Saltcake	Solid Solid	13 Kgal 555 Kgal	No	NA	Scheduled completion of interim stabilization 2/28/98.

Table D3.1-1. Material at Risk Table.[1] (94 sheets)

Field Name	MAR-Subject	MAR-Description	MAR-Classification	Capacity	Material Type	Physical Form	Volume or Activity	Transient	Quantity	Comments
241-S-110	Tank Contents	241-S-110	NCPLX	758 Kgal	Sludge Saltcake	Solid Solid	131 Kgal 259 Kgal	No	NA	Scheduled completion of interim stabilization 2/28/97.
241-S-111	Tank Contents	241-S-111	NCPLX	758 Kgal	Supernate Sludge Saltcake	Liquid Solid Solid	10 Kgal 139 Kgal 447 Kgal	No	NA	Scheduled completion of interim stabilization 9/30/98.
241-S-112	Tank Contents	241-S-112	NCPLX	758 Kgal	Sludge Saltcake	Solid Solid	5 Kgal 518 Kgal	No	NA	Scheduled completion of interim stabilization 1/31/98.
244-S	Tank Contents	DCRT 244-S	See comments*	87,720 Kgal **	See comments	See comments	Unknown	No	NA	*Waste from West Area Tank Farms, PFP, T-Plant, and 222-S labs. **108 Kgal vault volume less 20,280 tank volume.
241-S-304	Tank Contents	Catch tank 241-S-304	No data	6300 gal	No data	No data	2379 gal	No	NA	NA
240-S-302	Tank Contents	IMUST 240-S-302	No data	17684 gal	No data	No data	2276 gallons total waste	No	NA	Tank level monitored weekly for level.
240-S-302A	Tank Contents	IMUST 241-S-302A	No data	17684 gal	No data	No data	5130 gallons total waste	No	NA	Tank monitored by a leak detector-FIC level gauge.
240-S-302B	Tank Contents	IMUST 241-S-302B	NA	14314 gal	0.00	NA	0 gal	No	NA	NA
216-S-25	Tank Contents	Crib 216-S-25	NA	NA	NA	NA	NA	NA	NA	This crib receive 288,000,000 liters of process steam condensate from 242-S and 216-U-1 & 2 .
216-S-26	Tank Contents	Crib 216-S-26	NA	NA	NA	NA	NA	NA	NA	This crib received 164,000,000 liters of steam condensate, byproduct radioactive wastes, and sink wastes from 222-S.
241-S-101	Tank Headspace	241-S-101	NA	NA	NA	Vapor	2365 m3, 1200 g NH3	No	NA	NA
241-S-102	Tank Headspace	241-S-102	NA	NA	NA	Vapor	1903 m3, 590 / 960 g NH3	No	NA	NA
241-S-103	Tank Headspace	241-S-103	NA	NA	NA	Vapor	3043 m3, no NH3 present	No	NA	NA
241-S-104	Tank Headspace	241-S-104	NA	NA	NA	Vapor	2869 m3, no NH3 present	No	NA	NA
241-S-105	Tank Headspace	241-S-105	NA	NA	NA	Vapor	2255 m3, no NH3 present	No	NA	NA

Table D3.1-1. Material at Risk Table.[1] (94 sheets)

Field Name	MAR-Subject	MAR-Description	MAR-Classification	Capacity	Material Type	Physical Form	Volume or Activity	Transient	Quantity	Comments
241-S-106	Tank Headspace	241-S-106	NA	NA	NA	Vapor	2168 m3, no NH3 present	No	NA	NA
241-S-107	Tank Headspace	241-S-107	NA	NA	NA	Vapor	2558 m3, 370 g NH3	No	NA	NA
241-S-108	Tank Headspace	241-S-108	NA	NA	NA	Vapor	1695 m3, no NH3 present	No	NA	NA
241-S-109	Tank Headspace	241-S-109	NA	NA	NA	Vapor	1831 m3, no NH3 present	No	NA	NA
241-S-110	Tank Headspace	241-S-110	NA	NA	NA	Vapor	2505 m3, 270 g NH3	No	NA	NA
241-S-111	Tank Headspace	241-S-111	NA	NA	NA	Vapor	1726 m3, 160 g NH3	No	NA	NA
241-S-112	Tank Headspace	241-S-112	NA	NA	NA	Vapor	2002 m3, no NH3 present	No	NA	NA
244-S	Tank Headspace	DCRT 244-S	NA	NA	NA	Vapor	Unknown	No	NA	NA
241-S-304	Tank Headspace	Catch tank 241-S-304	NA	No data	NA	Vapor	Unknown	No	NA	No data on tank headspace composition available.
240-S-302	Tank Headspace	IMUST 240-S-302	NA	NA	NA	Vapor	17684 gal	No	NA	No data on tank headspace composition available.
241-S-302A	Tank Headspace	IMUST 241-S-302A	NA	NA	NA	Vapor	17684 gal	No	NA	No data on tank headspace composition available.
241-S-302B	Tank Headspace	IMUST 241-S-302B	NA	NA	NA	Vapor	14314 gal	No	NA	No data on tank headspace composition available.
241-S	Rail or Truck Tanker Contents	None	NA	NA	NA	NA	NA	NA	NA	NA
241-S	Contamination on Vehicle	None	NA	NA	NA	NA	NA	NA	NA	NA
241-S	Contamination on Equipment or Tools	Old ventilation system	Residual	NA	NA	Residue	NA	Yes*	NA	*Shared ventilation system is being dismantled. Sections are bagged and stored in conex boxes on the east side of the farm.
241-S	Contamination on Equipment or Tools	Cover blocks	Residual	NA	NA	Residue	NA	Yes*	NA	*Cover blocks for tanks being saltwell pumped are stored on east side of the farm.
241-S	Contamination on Equipment or Tools	Bone yard	NA	NA	NA	NA	NA	Yes*	NA	*Storage area for equipment on east side of the farm.
241-S	Ventilation Filter Contents	Primary	NA	NA	NA	NA	NA	NA	NA	NA

Table D3.1-1. Material at Risk Table.[1] (94 sheets)

Field Name	MAR-Subject	MAR-Description	MAR-Classification	Capacity	Material Type	Physical Form	Volume or Activity	Transient	Quantity	Comments
241-S	Ventilation Filter Contents	Annulus	NA	NA	NA	NA	NA	NA	NA	NA
241-S	Ventilation Filter Contents	Breather	NA	1 R/h at 6 inches	NA	Particu-late	NA	Yes - disposal in accord w/ WHC-EP-0063-4	NA	Filter efficiency is tested annually and replaced if they fail.
241-S	Contamination In Ventilation System	De-entrainers	NA	NA	NA	NA	NA	NA	NA	NA
241-S	Contamination In Ventilation System	Seal loop	Oil and condensate	1 cup	NA	Liquid	Residual	No	1 per tank	Seal loops associated with breather filters on tanks.
241-S	Contents of Pipeline and/or Source Tank During Transfer	NA	NA	NA	NA	NA	NA	NA	NA	See transfer line Table 7.
241-S	Contents of Sump or Encasement	None	NA	NA	NA	NA	NA	NA	NA	No known sumps with material inventory in S Farm. See transfer line Table 7 for discussion of encasements.
241-S	Contamination in Pit or Box	Cleanout boxes COB 1 through 18, COB 51-1 and 52-1	Unknown	73 gal	NA	Unknown	Unknown	No	20 boxes	NA
241-S	Contamination in Pit or Box	Valve pits 241-S-A, B, C, D	Residual	3142 gal	NA	Residue	Unknown	No	4 pits	NA
241-S-A	Contamination in Pit or Box	Valve pit 241-S-A	Residual	3142 gal	NA	Residue	Unknown	No	1 pit	NA
241-S-B	Contamination in Pit or Box	Valve pit 241-S-B	Residual	3142 gal	NA	Residue	Unknown	No	1 pit	NA
241-S-C	Contamination in Pit or Box	Valve pit 241-S-C	Residual	3142 gal	NA	Residue	Unknown	No	1 pit	NA
241-S-D	Contamination in Pit or Box	Valve pit 241-S-D	Residual	3142 gal	NA	Residue	Unknown	No	1 pit	NA
241-S-151	Contamination in Pit or Box	Diversion box 241-S-151	Residual	33510 gal	NA	Residue	Unknown	No	1 pit	NA
241-S-152	Contamination in Pit or Box	Diversion box 241-S-152	Residual	NA	NA	Residue	Unknown	No	1 pit	NA

Table D3.1-1. Material at Risk Table.[1] (94 sheets)

Field Name	MAR-Subject	MAR-Description	MAR-Classification	Capacity	Material Type	Physical Form	Volume or Activity	Transient	Quantity	Comments
241-S-01A	Contamination in Pit or Box	Pump pits 241-S-01A, 03A, 06A, 07A, 08A, 09A, 10A, 11A, 12A	Residual	2723 gal	NA	Residue	Unknown	No	9 pits	NA
241-S-02B	Contamination in Pit or Box	Distributor pit 241-S-02B	Residual	681 gal	NA	Residue	Unknown	No	1 pit	NA
241-S	Contamination in Pit or Box	Other pits	Residual	NA	NA	Residue	Unknown	No	NA	All other pits are weather covered.
241-S	SARA 313 Materials	None	NA	NA	NA	NA	NA	NA	NA	NA
241-S-VSU	Other	Vertical storage units	NA	NA	Solid	Unknown *	Yes *	NA	*Riser plug and valve handle storage. Also may have misc tools.	NA
241-S	Other	Flammable storage cabinet	Paint	NA	NA	NA	NA	Yes	NA	Spray paint stored in flammable storage cabinet in bone yard.
241-S	Other	Propane bottles	Propane	2 bottles	NA	Gas	NA	Yes	2 bottles	Propane for small space heater near green house on NE side of farm.
241-S	Other	Trailer	Liquid nitrogen propane	2 tanks	NA	Gas	NA	Yes	2 tanks	Trailer parked on outside of fence on west side of farm. Hose is routed to sample truck inside farm.
S Satellite Accumulation Area	Other	Satellite accumulation area	RCRA mixed wastes	6-55 gal mixed waste drums (maximum)	NA	Solid	Low level (less than class C).	Yes	6-55 gal drums max capacity for each satellite enclosure.	S-Farm SAA covers S, SX, and SY farms. Inventories removed when filled, transported to 209-E 90 day storage facility.
241-SX-101	Tank Contents	241-SX-101	DC	1 million gal	Supernate Sludge Saltcake	Liquid Solid Solid	1 Kgal 112 Kgal 343 Kgal	No	NA	Scheduled completion of interim stabilization 3/31/99.
241-SX-102	Tank Contents	241-SX-102	DSSF	1 million gal	Sludge Saltcake	Solid Solid	117 Kgal 426 Kgal	No	NA	Scheduled completion of interim stabilization 9/30/98.
241-SX-103	Tank Contents	241-SX-103	NCPLX	1 million gal	Supernate Sludge Saltcake	Liquid Solid Solid	1 Kgal 115 Kgal 536 Kgal	No	NA	Scheduled completion of interim stabilization 2/28/99.

Table D3.1-1. Material at Risk Table.[1] (94 sheets)

Field Name	MAR-Subject	MAR-Description	MAR-Classification	Capacity	Material Type	Physical Form	Volume or Activity	Transient	Quantity	Comments
241-SX-104	Tank Contents	241-SX-104	DSSF	1 million gal	Sludge Saltcake	Solid Solid	136 Kgal 478 Kgal	No	NA	Assumed leaker, scheduled completion of interim stabilization 1/31/99.
241-SX-105	Tank Contents	241-SX-105	DSSF	1 million gal	Sludge Saltcake	Solid Solid	73 Kgal 610 Kgal	No	NA	Scheduled completion of interim stabilization 1/31/99.
241-SX-106	Tank Contents	241-SX-106	NCPLX	1 million gal	Supernate Sludge Saltcake	Liquid Solid Solid	61 Kgal 12 Kgal 465 Kgal	No	NA	Scheduled completion of interim stabilization 4/30/99.
241-SX-107	Tank Contents	241-SX-107	NCPLX	1 million gal	Sludge	Solid	104 Kgal	No	NA	Assumed leaker.
241-SX-108	Tank Contents	241-SX-108	NCPLX	1 million gal	Sludge	Solid	87 Kgal	No	NA	Assumed leaker.
241-SX-109	Tank Contents	241-SX-109	NCPLX	1 million gal	Saltcake	Solid	244 Kgal	No	NA	Assumed leaker.
241-SX-110	Tank Contents	241-SX-110	NCPLX	1 million gal	Sludge	Solid	62 Kgal	No	NA	Assumed leaker.
241-SX-111	Tank Contents	241-SX-111	NCPLX	1 million gal	Sludge	Solid	125 Kgal	No	NA	Assumed leaker, interim stabilized 7/79.
241-SX-112	Tank Contents	241-SX-112	NCPLX	1 million gal	Sludge	Solid	92 Kgal	No	NA	Assumed leaker, interim stabilized 7/79.
241-SX-113	Tank Contents	241-SX-113	NCPLX	1 million gal	Sludge	Solid	26 Kgal	No	NA	Assumed leaker, interim stabilized 11/78.
241-SX-114	Tank Contents	241-SX-114	NCPLX	1 million gal	Sludge	Solid	181 Kgal	No	NA	Assumed leaker, interim stabilized 7/79.
241-SX-115	Tank Contents	241-SX-115	NCPLX	1 million gal	Sludge	Solid	12 Kgal	No	NA	Assumed leaker, interim stabilized 9/78.
241-SX-302	Tank Contents	IMUST 241-SX-302	CPLX, DSSF, NCPLX	17684 gal	NA	Solid Supernate	1050 gal 305 gal	No	NA	Isolated.
241-SX-101	Tank Headspace	241-SX-101	NA	NA	NA	Vapor	3105 m3, 9 g NH3 present	No	NA	NA
241-SX-102	Tank Headspace	241-SX-102	NA	NA	NA	Vapor	2776 m3, 33 g NH3 present	No	NA	NA
241-SX-103	Tank Headspace	241-SX-103	NA	NA	NA	Vapor	2364 m3, 140 g NH3 present	No	NA	NA
241-SX-104	Tank Headspace	241-SX-104	NA	NA	NA	Vapor	2507 m3, no NH3 present	No	NA	NA
241-SX-105	Tank Headspace	241-SX-105	NA	NA	NA	Vapor	2246 m3, no NH3 present	No	NA	NA
241-SX-106	Tank Headspace	241-SX-106	NA	NA	NA	Vapor	2795 m3, 390 g NH3 present	No	NA	NA
241-SX-107	Tank Headspace	241-SX-107	NA	NA	NA	Vapor	4438 m3, no NH3 present	No	NA	NA
241-SX-108	Tank Headspace	241-SX-108	NA	NA	NA	Vapor	4502 m3, no NH3 present	No	NA	NA

Table D3.1-1. Material at Risk Table.[1] (94 sheets)

Field Name	MAR-Subject	MAR-Description	MAR-Classification	Capacity	Material Type	Physical Form	Volume or Activity	Transient	Quantity	Comments
241-SX-109	Tank Headspace	241-SX-109	NA	NA	NA	Vapor	3908 m3, no NH3 present	No	NA	NA
241-SX-110	Tank Headspace	241-SX-110	NA	NA	NA	Vapor	4597 m3, no NH3 present	No	NA	NA
241-SX-111	Tank Headspace	241-SX-111	NA	NA	NA	Vapor	4358 m3, no NH3 present	No	NA	NA
241-SX-112	Tank Headspace	241-SX-112	NA	NA	NA	Vapor	4483 m3, no NH3 present	No	NA	NA
241-SX-113	Tank Headspace	241-SX-113	NA	NA	NA	Vapor	4733 m3, no NH3 present	No	NA	NA
241-SX-114	Tank Headspace	241-SX-114	NA	NA	NA	Vapor	4146 m3, no NH3 present	No	NA	NA
241-SX-115	Tank Headspace	241-SX-115	NA	NA	NA	Vapor	4786 m3, no NH3 present	No	NA	NA
241-SX-302	Tank Headspace	IMUST 241-SX-302	NA	NA	NA	Vapor	16329 gal	No	NA	No data on tank headspace composition available.
241-SX	Rail or Truck Tanker Contents	None	NA	NA	NA	NA	NA	NA	NA	NA
241-SX	Contamination on Vehicle	None	NA	NA	NA	NA	NA	NA	NA	NA
241-SX	Contamination on Equipment or Tools	None	NA	NA	NA	NA	NA	NA	NA	NA
241-SX	Ventilation Filter Contents	Primary	NA	1 R/h at 6 inches	NA	Particulate	NA	Yes - disposal in accord w/ WHC-EP-0063-4	NA	NA
241-SX	Ventilation Filter Contents	Annulus	NA	NA	NA	NA	NA	NA	NA	NA
241-SX	Ventilation Filter Contents	Breather	NA	1 R/h at 6 inches	NA	Particulate	NA	Yes - disposal in accord w/ WHC-EP-0063-4	NA	Filter efficiency is tested annually and replaced if they fail.
241-SX	Contamination In Ventilation System	De-entrainers	NA	NA	NA	NA	NA	NA	NA	NA
241-SX	Contamination In Ventilation System	Seal loop	Oil and condensate	1 cup	NA	Liquid	Residual	No	One per tank	Seal loops associated with breather filters on all tanks.

Table D3.1-1. Material at Risk Table.[1] (94 sheets)

Field Name	MAR-Subject	MAR-Description	MAR-Classification	Capacity	Material Type	Physical Form	Volume or Activity	Transient	Quantity	Comments
241-SX	Contents of Pipeline and/or Source Tank During Transfer	NA	NA	NA	NA	NA	NA	NA	NA	See transfer line Table 7.
241-SX	Contents of Sump or Encasement	NA	NA	NA	NA	NA	NA	NA	NA	No known sumps with material inventory in SX Farm. See transfer line Table 7 for discussion of encasements.
241-SX-01A	Contamination in Pit or Box	Pump pit 241-SX-01A	Residual	2245 gal	NA	Residue	NA	No	1 pit	NA
241-SX-04A	Contamination in Pit or Box	Pump pit 241-SX-04A	Residual	2245 gal	NA	Residue	NA	No	1 pit	NA
241-SX-06A	Contamination in Pit or Box	Pump pit 241-SX-06A	Residual	2245 gal	NA	Residue	NA	No	1 pit	NA
241-SX-05A	Contamination in Pit or Box	Pump pit 241-SX-05A	Residual	992 gal	NA	Residue	NA	No	1 pit	NA
241-SX-103B	Contamination in Pit or Box	Distributor pit 241-SX-103B	Residual	3042 gal	NA	Residue	NA	No	1 pit	NA
241-SX-105B	Contamination in Pit or Box	Distributor pit 241-SX-105B	Residual	4031 gal	NA	Residue	NA	No	1 pit	NA
241-SX-A	Contamination in Pit or Box	Valve box 241-SX-A	Residual	3142 gal	NA	Residue	NA	No	1 box	NA
241-SX-B	Contamination in Pit or Box	Valve box 241-SX-B	Residual	3142 gal	NA	Residue	NA	No	1 box	NA
241-SX-151	Contamination in Pit or Box	Diversion box 241-SX-151	Residual	NA	NA	Residue	NA	No*	1 box	*Both diversion boxes are weather covered.
241-SX-152	Contamination in Pit or Box	Diversion box 241-SX-152	Residual	NA	NA	Residue	NA	No*	1 box	*Both diversion boxes are weather covered.
241-SX	Contamination in Pit or Box	Other pits and boxes	Residual	NA	NA	Residue	NA	No	NA	All other pits in SX Farm are weather covered.
241-SX	SARA 313 Materials	Gas bottles for PCM1B	90% argon / 10% methane	480 cubic feet	NA	Gas	480 cubic feet	Yes	2 bottles	NA
241-SX	Other	Material storage*	Miscellaneous equipment storage	NA	NA	Solid	NA	Yes	NA	*North of change trailer outside of west fence.
241-SY-101	Tank Contents	241-SY-101	CC	1 .16 M gal	NA	Bulk	1109 Kgal	No	NA	NA
241-SY-102	Tank Contents	241-SY-102	DN/PT	1.16 M gal	NA	Liquid Solid	310 Kgal 71 Kgal	No	NA	NA
241-SY-103	Tank Contents	241-SY-103	CC	1.16 M gal	NA	Liquid Solid	382 Kgal 362 Kgal	No	NA	NA

Table D3.1-1. Material at Risk Table.[1] (94 sheets)

Field Name	MAR-Subject	MAR-Description	MAR-Classification	Capacity	Material Type	Physical Form	Volume or Activity	Transient	Quantity	Comments
241-SY-101	Tank Headspace	241-SY-101	NA	NA	NA	Vapor	1125 m3, see comment for NH3*	No	NA	*For SY Tank Farm Stack, the head space volumes were combined to calculate the total amount of ammonia.
241-SY-102	Tank Headspace	241-SY-102	NA	NA	NA	Vapor	3885 m3, see comment for NH3*	No	NA	*For SY Tank Farm Stack, the head space volumes were combined to calculate the total amount of ammonia.
241-SY-103	Tank Headspace	241-SY-103	NA	NA	NA	Vapor	2507 m3, see comment for NH3*	No	NA	*For SY Tank Farm Stack, the head space volumes were combined to calculate the total amount of ammonia.
241-SY	Tank Headspace	SY stack	NA	NA	NA	Vapor	7517 m3, 640 g NH3*	No	NA	*For SY Tank Farm Stack, the head space volumes were combined to calculate the total amount of ammonia.
241-SY	Rail or Truck Tanker Contents	None	NA	NA	NA	NA	NA	NA	NA	NA
241-SY	Contamination on Vehicle	None	NA	NA	NA	NA	NA	NA	NA	NA
241-SY	Contamination on Equipment or Tools	101-SY mixer	Tank waste	NA	NA	NA	NA	NA	NA	Mixer for tank 101-SY. Shielding is provided on east side of the SY Farm for change out.
241-SY	Ventilation Filter Contents	Primary	NA	200 mR/hr maximum for all HEPA filters	NA	Particulate	*Need surface rad measurements	Yes - disposal in accord w/ WHC-EP-0064-4	NA	*HEPA filters monitored for DP drop/loading in accordance w/ manufacturers specs.
241-SY	Ventilation Filter Contents	Annulus	NA	200 mR/hr maximum for all HEPA filters	NA	Particulate	*Need surface rad measurements	Yes - disposal in accord w/ WHC-EP-0064-4	NA	*HEPA filters monitored for DP drop/loading in accordance w/ manufacturers specs.
241-SY	Ventilation Filter Contents	Inlet breather	NA	1 R/h at 6 inches	NA	Particulate	NA	Yes - disposal in accord w/ WHC-EP-0064-4	NA	HEPA filters monitored for DP drop/loading in accordance w/ manufacturers specs.
241-SY	Contamination In Ventilation System	De-entrainers	Condensate	NA	NA	Liquid	NA	NA	NA	NA

Table D3.1-1. Material at Risk Table.[1] (94 sheets)

Field Name	MAR-Subject	MAR-Description	MAR-Classification	Capacity	Material Type	Physical Form	Volume or Activity	Transient	Quantity	Comments
241-SY	Contamination In Ventilation System	Seal loop	Condensate	NA	NA	Liquid	NA	NA	NA	Drains to SY-102 drain pit.
241-SY	Contents of Pipeline and/or Source Tank During Transfer	NA	NA	NA	NA	NA	NA	NA	NA	See transfer line Table 7.
241-SY	Contents of Sump or Encasement	NA	NA	NA	NA	NA	NA	NA	NA	No known sumps with material inventory in SY-Farm. See transfer line Table 7 for discussion of encasements.
241-SY-01A	Contamination in Pit or Box	Pump pit 241-SY-01A	Residual	2374 gal	NA	Residue	Unknown	No	1 pit	NA
241-SY-03A	Contamination in Pit or Box	Pump pit 241-SY-03A	Residual	2374 gal	NA	Residue	Unknown	No	1 pit	NA
241-SY-02A	Contamination in Pit or Box	Pump pit 241-SY-02A	Residual	2513 gal	NA	Residue	Unknown	No	1 pit	NA
241-SY-01B	Contamination in Pit or Box	Annulus pump pit 241-SY-01B	Residual	1231 gal	NA	Residue	Unknown	No	1 pit	NA
241-SY-02B	Contamination in Pit or Box	Annulus pump pit 241-SY-02B	Residual	1231 gal	NA	Residue	Unknown	No	1 pit	NA
241-SY-03B	Contamination in Pit or Box	Annulus pump pit 241-SY-03B	Residual	1231 gal	NA	Residue	Unknown	No	1 pit	NA
241-SY-01C	Contamination in Pit or Box	Leak detection pit 241-SY-01C	Residual	1356 gal	NA	Residue	Unknown	No	1 pit	NA
241-SY-02C	Contamination in Pit or Box	Leak detection pit 241-SY-02C	Residual	1356 gal	NA	Residue	Unknown	No	1 pit	NA
241-SY-03C	Contamination in Pit or Box	Leak detection pit 241-SY-03C	Residual	1356 gal	NA	Residue	Unknown	No	1 pit	NA
241-SY-02D	Contamination in Pit or Box	Drain pit 241-SY-02D	Residual	1459 gal	NA	Residue	Unknown	No	1 pit	NA
241-SY-02E	Contamination in Pit or Box	Feed pump pit 241-SY-02E	Residual	2474 gal	NA	Residue	Unknown	No	1 pit	NA
241-SY-A	Contamination in Pit or Box	Valve pits 241-SY-A	Residual	4413 gal	NA	Residue	Unknown	No	1 pit	NA
241-SY-B	Contamination in Pit or Box	Valve pits 241-SY-B	Residual	4413 gal	NA	Residue	Unknown	No	1 pit	NA

Table D3.1-1. Material at Risk Table.[1] (94 sheets)

Field Name	MAR-Subject	MAR-Description	MAR-Classification	Capacity	Material Type	Physical Form	Volume or Activity	Transient	Quantity	Comments
COB-SY-1-6	Contamination in Pit or Box	Clean out boxes COB-SY-1 through SY-6	Residual	181 gal	NA	Residue	Unknown	No	6 boxes	NA
241-SY-1	Contamination in Pit or Box	Clean out box COB-SY-1	Residual	181 gal	NA	Residue	Unknown	No	1 box	NA
241-SY-2	Contamination in Pit or Box	Clean out box COB-SY-2	Residual	181 gal	NA	Residue	Unknown	No	1 box	NA
241-SY-3	Contamination in Pit or Box	Clean out box COB-SY-3	Residual	181 gal	NA	Residue	Unknown	No	1 box	NA
241-SY-4	Contamination in Pit or Box	Clean out box COB-SY-4	Residual	181 gal	NA	Residue	Unknown	No	1 box	NA
241-SY-5	Contamination in Pit or Box	Clean out box COB-SY-5	Residual	181 gal	NA	Residue	Unknown	No	1 box	NA
241-SY-6	Contamination in Pit or Box	Clean out box COB-SY-6	Residual	181 gal	NA	Residue	Unknown	No	1 box	NA
241-SY	SARA 313 Materials	PCM1B gas bottles	90% argon / 10% methane	480 cubic feet	NA	Gas	480 cubic feet	Yes	2 bottles	NA
241-SY	Other	Liquid nitrogen	Nitrogen	~1500 gal	NA	Gas	Unknown	No	1 large tank	North side of SY Farm.
241-SY	Other	Diesel generator	Diesel fuel	NA	NA	Liquid	Unknown	Yes	1 generator	North side of 241-SY-271 instrument building.
241-SY	Other	Hydrogen bottles	.01%H2, 99.99% air 5.0% H2, 95.0% air	480 cubic feet	NA	Gas	480 cubic feet	Yes	2 bottles per SHMS cabinet *	*2 SHMS on Tank 101-SY and 1 on Tank 103-SY. Calibration bottles for instrumentation.
241-T-101	Tank Contents	241-T-101	NCPLX	530 Kgal	Supernate Sludge	Liquid Solid	1 Kgal 101 Kgal	No	NA	Assumed leaker, interim stabilized 4/93.
241-T-102	Tank Contents	241-T-102	NCPLX	530 Kgal	Supernate Sludge	Liquid Solid	13 Kgal 19 Kgal	No	NA	Interim stabilized 3/81 under old criteria, must meet new criteria.
241-T-103	Tank Contents	241-T-103	NCPLX	530 Kgal	Supernate Sludge	Liquid Solid	4 Kgal 23 Kgal	No	NA	Assumed leaker, interim stabilized 11/83.
241-T-104	Tank Contents	241-T-104	NCPLX	530 Kgal	Supernate Sludge	Liquid Solid	3 Kgal 442 Kgal	No	NA	Scheduled completion of interim stabilization 7/31/96.
241-T-105	Tank Contents	241-T-105	NCPLX	530 Kgal	Sludge	Solid	98 Kgal	No	NA	Interim stabilized 6/87.
241-T-106	Tank Contents	241-T-106	NCPLX	530 Kgal	Supernate Sludge	Liquid Solid	2 Kgal 19 Kgal	No	NA	Assumed leaker, interim stabilized 8/81.
241-T-107	Tank Contents	241-T-107	NCPLX	530 Kgal	Sludge	Solid	173 Kgal	No	NA	Assumed leaker, scheduled completion of interim stabilization 4/30/96.

Table D3.1-1. Material at Risk Table.[1] (94 sheets)

Field Name	MAR-Subject	MAR-Description	MAR-Classification	Capacity	Material Type	Physical Form	Volume or Activity	Transient	Quantity	Comments
241-T-108	Tank Contents	241-T-108	NCPLX	530 Kgal	Sludge	Solid	44 Kgal	No	NA	Assumed leaker, interim stabilized 11/78.
241-T-109	Tank Contents	241-T-109	NCPLX	530 Kgal	Sludge	Solid	58 Kgal	No	NA	Assumed leaker, interim stabilized 12/84.
241-T-110	Tank Contents	241-T-110	NCPLX	530 Kgal	Supernate Sludge	Liquid Solid	3 Kgal 376 Kgal	No	NA	Scheduled completion of interim stabilization 2/28/97.
241-T-111	Tank Contents	241-T-111	NCPLX	530 Kgal	Sludge	Solid	446 Kgal	No	NA	Assumed leaker, interim stabilized 12/94.
241-T-112	Tank Contents	241-T-112	NCPLX	530 Kgal	Supernate Sludge	Liquid Solid	7 Kgal 60 Kgal	No	NA	Interim stabilized 3/81 under old criteria, must meet new criteria.
241-T-201	Tank Contents	241-T-201	NCPLX	55 Kgal	Supernate Sludge	Liquid Solid	1 Kgal 28 Kgal	No	NA	NA
241-T-202	Tank Contents	241-T-202	NCPLX	55 Kgal	Sludge	Solid	21 Kgal	No	NA	NA
241-T-203	Tank Contents	241-T-203	NCPLX	55 Kgal	Sludge	Solid	35 Kgal	No	NA	NA
241-T-204	Tank Contents	241-T-204	NCPLX	55 Kgal	Sludge	Solid	38 Kgal	No	NA	NA
241-T-301	Tank Contents	IMUST 241-T-301	Supernate 6.58E-07 g/gal PU 1600 µCi/gal Cs137 304 µCi/gal Sr90 solids 3040 µCi/gal Sr90	36000 gal	NA	Solid Supernate	21658 gal 588 gal	No	NA	NA
242-T-135	Tank Contents	IMUST 242-T-135	No data	Unknown	No data	NA	NA	NA	NA	NA
241-T-101	Tank Headspace	241-T-101	NA	NA	NA	Vapor	2853 m3, no NH3 present	No	NA	NA
241-T-102	Tank Headspace	241-T-102	NA	NA	NA	Vapor	3118 m3, no NH3 present	No	NA	NA
241-T-103	Tank Headspace	241-T-103	NA	NA	NA	Vapor	3137 m3, no NH3 present	No	NA	NA
241-T-104	Tank Headspace	241-T-104	NA	NA	NA	Vapor	1555 m3, no NH3 present	No	NA	NA
241-T-105	Tank Headspace	241-T-105	NA	NA	NA	Vapor	2869 m3, no NH3 present	No	NA	NA
241-T-106	Tank Headspace	241-T-106	NA	NA	NA	Vapor	3160 m3, no NH3 present	No	NA	NA
241-T-107	Tank Headspace	241-T-107	NA	NA	NA	Vapor	2585 m3, 250/190 g	No	NA	NA

Table D3.1-1. Material at Risk Table.[1] (94 sheets)

Field Name	MAR-Subject	MAR-Description	MAR-Classification	Capacity	Material Type	Physical Form	Volume or Activity	Transient	Quantity	Comments
241-T-108	Tank Headspace	241-T-108	NA	NA	NA	Vapor	3073 m3, no NH3 present	No	NA	NA
241-T-109	Tank Headspace	241-T-109	NA	NA	NA	Vapor	3020 m3, no NH3 present	No	NA	NA
241-T-110	Tank Headspace	241-T-110	NA	NA	NA	Vapor	1805 m3, 60 g NH3	No	NA	NA
241-T-111	Tank Headspace	241-T-111	NA	NA	NA	Vapor	1551 m3, 260 g NH3	No	NA	NA
241-T-112	Tank Headspace	241-T-112	NA	NA	NA	Vapor	2986 m3, 120 g NH3	No	NA	NA
241-T-201	Tank Headspace	241-T-201	NA	NA	NA	Vapor	124 m3, no NH3 present	No	NA	NA
241-T-202	Tank Headspace	241-T-202	NA	NA	NA	Vapor	154 m3, no NH3 present	No	NA	NA
241-T-203	Tank Headspace	241-T-203	NA	NA	NA	Vapor	101 m3, no NH3 present	No	NA	NA
241-T-204	Tank Headspace	241-T-204	NA	NA	NA	Vapor	90 m3, no NH3 present	No	NA	NA
241-T-301	Tank Headspace	IMUST 241-T-301	NA	NA	NA	Vapor	13754 gal	No	NA	No data on tank headspace composition available.
241-T-135	Tank Headspace	IMUST 242-T-135	NA	No data	NA	NA	NA	NA	NA	NA
241-T	Rail or Truck Tanker Contents	None	NA	NA	NA	NA	NA	NA	NA	NA
241-T	Contamination on Vehicle	None	NA	NA	NA	NA	NA	NA	NA	NA
241-T	Contamination on Equipment or Tools	Hand tools	NA	NA	NA	NA	NA	Yes	NA	Hand tools stored next to Satellite Accumulation Area for in-farm usage.
241-T	Ventilation Filter Contents	Primary	NA	NA	NA	NA	NA	NA	NA	NA
241-T	Ventilation Filter Contents	Annulus	NA	NA	NA	NA	NA	NA	NA	NA
241-T	Ventilation Filter Contents	Breather	NA	1 R/h at 6 inches	NA	Particu-late	NA	Yes - disposal in accord w/ WHC-EP-0063-4	NA	Filter efficiency is tested annually and replaced if they fail.
241-T	Contamination In Ventilation System	De-entrainers	NA	NA	NA	NA	NA	NA	NA	NA

Table D3.1-1. Material at Risk Table.[1] (94 sheets)

Field Name	MAR-Subject	MAR-Description	MAR-Classification	Capacity	Material Type	Physical Form	Volume or Activity	Transient	Quantity	Comments
241-T	Contamination In Ventilation System	Seal loop	Oil and condensate	1 cup	NA	Liquid	NA	NA	NA	Seal loops associated with breather filters on all tanks.
241-T	Contents of Pipeline and/or Source Tank During Transfer	NA	NA	NA	NA	NA	NA	NA	NA	See transfer line Table 7.
241-T	Contents of Sump or Encasement	NA	NA	NA	NA	NA	NA	NA	NA	No known sumps with material inventory in T Farm.
241-T-04A	Contamination in Pit or Box	Pump pit 241-T-104	Residual	1057 gal	NA	Residue	Unknown	No	1 pit	NA
241-T-05A	Contamination in Pit or Box	Pump pit 241-T-105	Residual	1057 gal	NA	Residue	Unknown	No	1 pit	NA
241-T-07A	Contamination in Pit or Box	Pump pit 241-T-107	Residual	1057 gal	NA	Residue	Unknown	No	1 pit	NA
241-T-09A	Contamination in Pit or Box	Pump pit 241-T-109	Residual	1057 gal	NA	Residue	Unknown	No	1 pit	NA
241-T-10A	Contamination in Pit or Box	Pump pit 241-T-110	Residual	1057 gal	NA	Residue	Unknown	No	1 pit	NA
241-T-11A	Contamination in Pit or Box	Pump pit 241-T-111	Residual	1057 gal	NA	Residue	Unknown	No	1 pit	NA
241-T-01B	Contamination in Pit or Box	Heel pit 241-T-01B	Residual	6860 gal	NA	Residue	Unknown	No	1 pit	NA
241-T-DIV	Contamination in Pit or Box	Diversion box 240-T-151,152,153,252,TR-152,153	Residual	NA	NA	Residue	Unknown	No	6 boxes	All are weather covered.
240-T-151	Contamination in Pit or Box	Diversion box 240-T-151	Residual	NA	NA	Residue	Unknown	No	1 box	All are weather covered.
240-T-152	Contamination in Pit or Box	Diversion box 240-T-152	Residual	NA	NA	Residue	Unknown	No	1 box	All are weather covered.
240-T-153	Contamination in Pit or Box	Diversion box 240-T-153	Residual	NA	NA	Residue	Unknown	No	1 box	All are weather covered.
240-T-252	Contamination in Pit or Box	Diversion box 240-T-252	Residual	NA	NA	Residue	Unknown	No	1 box	All are weather covered.
240-TR-152	Contamination in Pit or Box	Diversion box 240-TR-152	Residual	NA	NA	Residue	Unknown	No	1 box	All are weather covered.
240-TR-153	Contamination in Pit or Box	Diversion box 240-TR-153	Residual	NA	NA	Residue	Unknown	No	1 box	All are weather covered.
241-T	SARA 313 Materials	Gas bottles for PCM1B	90% argon / 10% methane	480 cubic feet	NA	Vapor	480 cubic feet per bottle	Yes	2 bottles	Located outside change trailer.

Table D3.1-1. Material at Risk Table.[1] (94 sheets)

Field Name	MAR-Subject	MAR-Description	MAR-Classification	Capacity	Material Type	Physical Form	Volume or Activity	Transient	Quantity	Comments
241-T	Other	Conex storage*	NA	NA	NA	NA	NA	NA	1 conex box	*Temporary storage (conex) located southwest of T-112.
T Satellite Accumulation Area	Other	Satellite accumulation area*	RCRA mixed waste	6-55 gal drums maximum storage	NA	NA	NA	NA	None	*Located south of conex storage.
241-T	Other	Gas generator*	NA	NA	NA	NA	NA	NA	1 generator	*Gasoline powered generator located southwest of T-112 along the south fence.
241-T	Other	Tool storage*	NA	NA	NA	NA	NA	NA	1 tool storage box	*Located next to SAA.
241-T	Other	Contaminated burial boxes*	NA	NA	NA	NA	NA	NA	2 boxes	*Located south of hazard storage.
241-T	Other	Building*	NA	NA	NA	NA	NA	NA	NA	*Small pink building Northwest of Tank T-102. Assumed asbestos.
216-T-1	Other	Ditch 216-T-1	NA	NA	NA	NA	NA	NA	NA	This ditch received 178,000,000 liters of cooling water waste, decon. waste, and sodium hydroxide wash water solution from 221-T, 271-T, and Sodium-Air Water Reaction Emergency Air Cleaning Development - HEDL.
216-T-4-2	Other	Ditch 216-T-4-2	NA	NA	NA	NA	NA	NA	NA	This ditch received steam condensate and condenser cooling water form 242-T and 221-T.
216-T-7	Other	Crib 216-T-7	NA	NA	NA	NA	NA	NA	NA	Received waste from 221-T, and 224-T buildings. The waste is high salt and neutral/basic.
216-T-32	Other	Crib 216-T-32	NA	NA	NA	NA	NA	NA	NA	Received waste from the 224-T building via the 201-T tank. The waste is high salt and neutral/basic.
241-TX-101	Tank Contents	241-TX-101	NCPLX	758 K gal	Supernate Sludge	Liquid Solid	3 Kgal 84 Kgal	No	NA	Interim stabilized 2/84.
241-TX-102	Tank Contents	241-TX-102	NCPLX	758 K gal	Saltcake	Solid	217 Kgal	No	NA	Interim stabilized 4/83.

Table D3.1-1. Material at Risk Table.[1] (94 sheets)

Field Name	MAR-Subject	MAR-Description	MAR-Classification	Capacity	Material Type	Physical Form	Volume or Activity	Transient	Quantity	Comments
241-TX-103	Tank Contents	241-TX-103	NCPLX	758 K gal	Sludge	Solid	157 Kgal	No	NA	Interim stabilized 8/83.
241-TX-104	Tank Contents	241-TX-104	NCPLX	758 K gal	Supernate Saltcake	Liquid Solid	1 Kgal 64 Kgal	No	NA	Interim stabilized 9/79.
241-TX-105	Tank Contents	241-TX-105	NCPLX	758 K gal	Saltcake	Solid	609 Kgal	No	NA	Assumed leaker, interim stabilized 4/83.
241-TX-106	Tank Contents	241-TX-106	NCPLX	758 K gal	Saltcake	Solid	453 Kgal	No	NA	Interim stabilized 6/83.
241-TX-107	Tank Contents	241-TX-107	NCPLX	758 K gal	Supernate Saltcake	Liquid Solid	1 Kgal 35 Kgal	No	NA	Assumed leaker, interim stabilized 10/79.
241-TX-108	Tank Contents	241-TX-108	NCPLX	758 K gal	Saltcake	Solid	134 Kgal	No	NA	Interim stabilized 3/83.
241-TX-109	Tank Contents	241-TX-109	NCPLX	758 K gal	Saltcake	Solid	384 Kgal	No	NA	Interim stabilized 4/83.
241-TX-110	Tank Contents	241-TX-110	NCPLX	758 K gal	Saltcake	Solid	462 Kgal	No	NA	Assumed leaker, interim stabilized 4/83.
241-TX-111	Tank Contents	241-TX-111	NCPLX	758 K gal	Saltcake	Solid	370 Kgal	No	NA	Interim stabilized 4/83.
241-TX-112	Tank Contents	241-TX-112	NCPLX	758 K gal	Saltcake	Solid	649 Kgal	No	NA	Interim stabilized 4/83.
241-TX-113	Tank Contents	241-TX-113	NCPLX	758 K gal	Saltcake	Solid	607 Kgal	No	NA	Assumed leaker, interim stabilized 4/83.
241-TX-114	Tank Contents	241-TX-114	NCPLX	758 K gal	Saltcake	Solid	535 Kgal	No	NA	Assumed leaker, interim stabilized 4/83.
241-TX-115	Tank Contents	241-TX-115	NCPLX	758 K gal	Saltcake	Solid	640 Kgal	No	NA	Assumed leaker, interim stabilized 9/83.
241-TX-116	Tank Contents	241-TX-116	NCPLX	758 K gal	Saltcake	Solid	631 Kgal	No	NA	Assumed leaker, interim stabilized 4/83.
241-TX-117	Tank Contents	241-TX-117	NCPLX	758 K gal	Saltcake	Solid	626 Kgal	No	NA	Assumed leaker, interim stabilized 3/83.
241-TX-118	Tank Contents	241-TX-118	NCPLX	758 K gal	Saltcake	Solid	347 Kgal	No	NA	Interim stabilized 4/83.
241-TX-302A	Tank Contents	241-TX-302A IMUST	Cs 137 Supernate 48µCi/gal	17684	NA	Solids Supernate	2450 gal 30 gal	No	NA	NA
241-TX-302B(R)	Tank Contents	241-TX-302B(R) IMUST	NA	12000	NA	No data	0 gal	No	NA	NA
241-TX-302B	Tank Contents	241-TX-302B IMUST	NA	17684	NA	No data	1320 gal	No	NA	NA
241-TX-302X	Tank Contents	241-TX-302X IMUST	NA	14314	NA	Solids Supernate	108 gal 245 gal	No	NA	NA
241-TX-001	Tank Contents	244-TX-001 IMUST	Cs 137 supernate 16995 µCi/gal	50000	NA	Solids Supernate	2291 gal 49 gal	No	NA	NA

Table D3.1-1. Material at Risk Table.[1] (94 sheets)

Field Name	MAR-Subject	MAR-Description	MAR-Classification	Capacity	Material Type	Physical Form	Volume or Activity	Transient	Quantity	Comments
241-TX-002	Tank Contents	244-TX-002 IMUST	Cs 137 supernate 83270µCi/gal PU supernate 0.72 µg/L	15000	NA	Solids	2945 gal	No	NA	NA
241-TX-003	Tank Contents	244-TX-003 IMUST	NA	15000	NA	Solids	6460 gal	No	NA	NA
242-TA-R1	Tank Contents	242-TA-R1 IMUST	No data *	No data	NA	No data	No data	No	NA	*Waste is noted as being very hot radiologically.
241-TX-302C	Tank Contents	241-TX-302C Catch Tank	No data *	14556 gal	NA	No data	5040 gal	No	NA	*Waste from 241-TX-154 diversion box.
241-TX-101	Tank Headspace	241-TX-101	NA	NA	NA	Vapor	3652 m3	No	NA	NA
241-TX-102	Tank Headspace	241-TX-102	NA	NA	NA	Vapor	3160 m3	No	NA	NA
241-TX-103	Tank Headspace	241-TX-103	NA	NA	NA	Vapor	3387 m3	No	NA	NA
241-TX-104	Tank Headspace	241-TX-104	NA	NA	NA	Vapor	3735 m3	No	NA	NA
241-TX-105	Tank Headspace	241-TX-105	NA	NA	NA	Vapor	1676 m3, 25 g NH3	No	NA	NA
241-TX-106	Tank Headspace	241-TX-106	NA	NA	NA	Vapor	2267 m3	No	NA	NA
241-TX-107	Tank Headspace	241-TX-107	NA	NA	NA	Vapor	3845 m3, 560 g NH3	No	NA	NA
241-TX-108	Tank Headspace	241-TX-108	NA	NA	NA	Vapor	3474 m3	No	NA	NA
241-TX-109	Tank Headspace	241-TX-109	NA	NA	NA	Vapor	2528 m3, 1080 g NH3	No	NA	NA
241-TX-110	Tank Headspace	241-TX-110	NA	NA	NA	Vapor	2233 m3	No	NA	NA
241-TX-111	Tank Headspace	241-TX-111	NA	NA	NA	Vapor	2581 m3, 72 g NH3	No	NA	NA
241-TX-112	Tank Headspace	241-TX-112	NA	NA	NA	Vapor	1525 m3	No	NA	NA
241-TX-113	Tank Headspace	241-TX-113	NA	NA	NA	Vapor	1684 m3	No	NA	NA
241-TX-114	Tank Headspace	241-TX-114	NA	NA	NA	Vapor	1956 m3	No	NA	NA
241-TX-115	Tank Headspace	241-TX-115	NA	NA	NA	Vapor	1559 m3	No	NA	NA
241-TX-116	Tank Headspace	241-TX-116	NA	NA	NA	Vapor	1593 m3	No	NA	NA
241-TX-117	Tank Headspace	241-TX-117	NA	NA	NA	Vapor	1612 m3	No	NA	NA
241-TX-118	Tank Headspace	241-TX-118	NA	NA	NA	Vapor	2668 m3, 67 g NH3	No	NA	NA
241-TX-302A	Tank Headspace	241-TX-302A IMUST	NA	NA	NA	Vapor	15204 gal*	No	NA	*No data on tank headspace composition available.
241-TX-302B(R)	Tank Headspace	241-TX-302B(R) IMUST	NA	NA	NA	Vapor	12000 gal*	No	NA	*No data on tank headspace composition available.
241-TX-302B	Tank Headspace	241-TX-302B IMUST	NA	NA	NA	Vapor	1 7684 gal*	No	NA	*No data on tank headspace composition available.

Table D3.1-1. Material at Risk Table.[1] (94 sheets)

Field Name	MAR-Subject	MAR-Description	MAR-Classification	Capacity	Material Type	Physical Form	Volume or Activity	Transient	Quantity	Comments
241-TX-302X	Tank Headspace	241-TX-302X IMUST	NA	NA	NA	Vapor	13961 gal	No	NA	*No data on tank headspace composition available.
241-TX-001	Tank Headspace	244-TX-001 IMUST	NA	NA	NA	Vapor	47660 gal*	No	NA	*No data on tank headspace composition available.
241-TX-002	Tank Headspace	244-TX-002 IMUST	NA	NA	NA	Vapor	12055 gal*	No	NA	*No data on tank headspace composition available.
241-TX-003	Tank Headspace	244-TX-003 IMUST	NA	NA	NA	Vapor	8540 gal*	No	NA	*No data on tank headspace composition available.
242-TA-R1	Tank Headspace	242-TA-R1 IMUST	NA	NA	NA	Vapor	Unknown*	No	NA	*No data on tank headspace composition available.
241-TX-302C	Tank Headspace	241-TX-302C Catch tank	NA	NA	NA	Vapor	Unknown*	No	NA	*No data on tank headspace composition available.
241-TX	Rail or Truck Tanker Contents	None	NA	NA	NA	NA	NA	NA	NA	NA
241-TX	Contamination on Vehicle	Garbage truck	NA	NA	NA	NA	NA	Yes	NA	Garbage truck located south of change trailer outside of fence in contaminated vehicle parking area.
241-TX	Contamination on Equipment or Tools	None	NA	NA	NA	NA	NA	NA	NA	Tool crib located in TX farm contained misc small tools, no contamination detected on rad survey.
241-TX	Ventilation Filter Contents	Primary	NA	NA	NA	NA	NA	NA	NA	NA
241-TX	Ventilation Filter Contents	Annulus	NA	NA	NA	NA	NA	NA	NA	NA
241-TX	Ventilation Filter Contents	Breather	NA	1 R/h at 6 inches	NA	Particu-late	NA	Yes - disposal in accord w/ WHC-EP-0063-4	NA	Filter efficiency is tested annually and replaced if they fail.
241-TX	Ventilation Filter Contents	Filter on vent system for DCRT 244-TX	NA	1 R/h at 6 inches	NA	Particu-late	NA	Yes - disposal in accord w/ WHC-EP-0063-4	NA	Filter efficiency is tested annually and are replaced if they fail.

Table D3.1-1. Material at Risk Table.[1] (94 sheets)

Field Name	MAR-Subject	MAR-Description	MAR-Classification	Capacity	Material Type	Physical Form	Volume or Activity	Transient	Quantity	Comments
241-TX	Contamination In Ventilation System	De-entrainers	NA	NA	NA	NA	NA	NA	NA	NA
241-TX	Contamination In Ventilation System	Seal loop	Oil and condensate	1 cup	NA	Liquid	Residual	NA	NA	Seal loops associated with breather filters on tanks.
241-TX	Contents of Pipeline and/or Source Tank During Transfer	NA	NA	NA	NA	NA	NA	NA	NA	See transfer line Table 7.
244-TX	Contents of Sump or Encasement	244-TX DCRT vault	NA	54,000 gal*	NA	NA	NA	NA	NA	*Volume of vault = 85,000 gal - tank volume (31,000 gal).
241-TX	Contamination in Pit or Box	Pump pits	Residual	NA	NA	Residue	NA	No	NA	All pump pits in TX Farm are weather covered and inactive .
241-TX	Contamination in Pit or Box	Sluice pits	Residual	NA	NA	Residue	NA	No	NA	All sluice pits in TX Farm are weather covered and inactive.
241-TX	Contamination in Pit or Box	Heel pit	Residual	NA	NA	Residue	NA	No	NA	241-TX-112 Heel pit is weather covered and inactive.
241-TXR-151-3	Contamination in Pit or Box	Diversion boxes *241-TXR-151 241-TXR-152 241-TXR-153 241-TX-153 241-TX-155 242-T-151	Residual	NA	NA	Residue	NA	No	NA	*All listed diversion boxes are weather covered.
241-TXR-151	Contamination in Pit or Box	Diversion box 241-TXR-151*	Residual	NA	NA	Residue	NA	No	NA	*All listed diversion boxes are weather covered.
241-TXR-152	Contamination in Pit or Box	Diversion box 241-TXR-152*	Residual	NA	NA	Residue	NA	No	NA	*All listed diversion boxes are weather covered.
241-TXR-153	Contamination in Pit or Box	Diversion box 241-TXR-153*	Residual	NA	NA	Residue	NA	No	NA	*All listed diversion boxes are weather covered.
241-TX-153	Contamination in Pit or Box	Diversion box 241-TX-153	Residual	NA	NA	Residue	NA	No	NA	*All listed diversion boxes are weather covered.
241-TX-155	Contamination in Pit or Box	Diversion box 241-TX-155	Residual	NA	NA	Residue	NA	No	NA	*All listed diversion boxes are weather covered.

Table D3.1-1. Material at Risk Table.[1] (94 sheets)

Field Name	MAR-Subject	MAR-Description	MAR-Classification	Capacity	Material Type	Physical Form	Volume or Activity	Transient	Quantity	Comments
241-T-151	Contamination in Pit or Box	Diversion box 241-T-151	Residual	NA	NA	Residue	NA	No	NA	*All listed diversion boxes are weather covered.
241-TX-152	Contamination in Pit or Box	241-TX-152	Residual	2082 gal	NA	Residue	NA	No	NA	NA
241-TX-154	Contamination in Pit or Box	241-TX-154	Residual	24,832 gal*	NA	Residue	NA	No	NA	*Includes diversion box, pipe pit, and jumper storage.
241-TX	SARA 313 Materials	Gas bottles for PCM1B *	90% argon / 10% methane	480 cubic feet	NA	Gas	480 cubic feet	Yes	2 bottles	*Outside the TX-Farm change trailer.
241-TX	Other	Water tanks w/gas powered pump*	Water	~2500 gal	NA	Liquid	Unknown	Yes	2 tanks	*Stored on outside of west fence, south of change trailer.
241-TX	Other	Herbicide	Herbicide*	~25 bags	NA	Solid	Unknown	Yes	~ 25 bags	*Herbicide on pallet wrapped in plastic.
TX Satellite Accumulation Area	Other	Satellite accumulation area	RCRA mixed wastes	6-55 gal mixed waste drums (maximum)	NA	Solid	Low level (less than class C)	Yes	6-55 gal drums max capacity for each satellite enclosure	Inventories removed when filled, transported to 209-E 90 day storage facility.
241-TX	Other	Liquid nitrogen	Liquid nitrogen	2 bottles	NA	Vapor	NA	Yes	2 bottles	Stored outside west fence labeled "Rust Geotech".
241-TY-101	Tank Contents	241-TY-101	NCPLX	758 Kgal	Sludge	Solid	118 Kgal	No	NA	Assumed leaker, interim stabilized 4/84.
241-TY-102	Tank Contents	241-TY-102	NCPLX	758 Kgal	Saltcake	Solid	64 Kgal	No	NA	Tank sound, interim stabilized 9/79
241-TY-103	Tank Contents	241-TY-103	NCPLX	758 Kgal	Sludge	Solid	162 Kgal	No	NA	Assumed leaker, interim stabilized 2/83.
241-TY-104	Tank Contents	241-TY-104	NCPLX	758 Kgal	Supernate Sludge	Liquid Solid	43 Kgal	No	NA	Assumed leaker, interim stabilized 11/83.
241-TY-105	Tank Contents	241-TY-105	NCPLX	758 Kgal	Sludge	Solid	231 Kgal	No	NA	Assumed leaker, interim stabilized 2/83.
241-TY-106	Tank Contents	241-TY-106	NCPLX	758 Kgal	Sludge	Solid	17 Kgal	No	NA	Assumed leaker, interim stabilized 11/78.
241-TY-302A	Tank Contents	241-TY-302A (IMUST)	NA	17,684 gal	Sludge	Solid	450 gal	No	NA	No data available for material composition.
241-TY-302B	Tank Contents	241-TY-302B (IMUST)	NA	14,314 gal	NA	NA	0 gal	No	NA	No data available for material composition.
216-TY-201	Tank Contents	216-TY-201 (IMUST)	NA	19,200 gal	No data	No data	No data	No data	NA	Concrete tank received waste from TY-Farm and transferred it to the 216-T cribs.

Table D3.1-1. Material at Risk Table.[1] (94 sheets)

Field Name	MAR-Subject	MAR-Description	MAR-Classification	Capacity	Material Type	Physical Form	Volume or Activity	Transient	Quantity	Comments
241-TY-101	Tank Headspace	241-TY-101	NA	NA	NA	Vapor	3535 m3, 12 mg/m3 NH3 present.	No	NA	Tank TY-101 has tank vapor space sampling probe installed (temporary).
241-TY-102	Tank Headspace	241-TY-102	NA	NA	NA	Vapor	3739 m3, no NH3 present	No	NA	Tank TY-102 scheduled to have tank vapor space sampling probe installed.
241-TY-103	Tank Headspace	241-TY-103	NA	NA	NA	Vapor	3368 m3, 37 mg/m3 NH3 present	No	NA	Tank TY-103 has tank vapor space sampling probe installed (temporary).
241-TY-104	Tank Headspace	241-TY-104	NA	NA	NA	Vapor	3807 m3, 46 mg/m3 NH3 present	No	NA	Tank TY-104 has tank vapor space sampling probe installed (temporary).
241-TY-105	Tank Headspace	241-TY-105	NA	NA	NA	Vapor	3107 m3, no NH3 present	No	NA	NA
241-TY-106	Tank Headspace	241-TY-106	NA	NA	NA	Vapor	3917 m3, no NH3 present	No	NA	NA
241-TY-302A	Tank Headspace	241-TY-302A (IMUST)	NA	NA	NA	Vapor	17,234 gal	No	NA	NA
241-TY-302B	Tank Headspace	241-TY-302B (IMUST)	NA	NA	NA	Vapor	14,314 gal	No	NA	NA
216-TY-201	Tank Headspace	216-TY-201 (IMUST)	NA	NA	NA	Vapor	19,200 gal	No	NA	NA
241-TY	Rail or Truck Tanker Contents	None	NA	NA	NA	NA	NA	NA	NA	No rail or truck tankers in TY farm.
241-TY	Contamination on Vehicle	None	NA	NA	NA	NA	NA	NA	NA	NA
241-TY	Contamination on Equipment or Tools	None	NA	NA	NA	NA	NA	NA	NA	No stored equipment in TY farm.
241-TY	Ventilation Filter Contents	Primary	NA	NA	NA	NA	NA	NA	NA	TY farm has only SST's with passive ventilation.
241-TY	Ventilation Filter Contents	Annulus	NA	NA	NA	NA	NA	NA	NA	TY farm has only SST's, no annulus.
241-TY	Ventilation Filter Contents	Breather	Residual	1 R/h at 6 inches	NA	Particulate	NA	Yes-disposal in accord w/ WHC-EP-0063-4 (9/93)	1 per tank	HEPA breather filters located on each tank.

Table D3.1-1. Material at Risk Table.[1] (94 sheets)

Field Name	MAR-Subject	MAR-Description	MAR-Classification	Capacity	Material Type	Physical Form	Volume or Activity	Transient	Quantity	Comments
241-TY	Contamination In Ventilation System	De-entrainers	NA	NA	NA	NA	NA	No	NA	No de-entrainers in TY farm.
241-TY	Contamination In Ventilation System	Seal loop	Residual	~1 cup (breather filter loop)	NA	Liquid (oil)	NA	No	~1 cup oil in breather filter seal loop	Same for all TY tanks 101-106.
241-TY	Contents of Pipeline and/or Source Tank During Transfer	None	NA	NA	NA	NA	NA	No	NA	Refer to transfer line Table 7.
241-TY	Contents of Sump or Encasement	None	NA	NA	NA	NA	NA	No	NA	No sumps/encasements in TY farm.
241-TY	Contamination in Pit or Box	All pits	NA	NA	NA	NA	Residual	No	NA	All pits in TY-Farm are weather covered.
241-TY	Contemination in Pit or Box	Valve box	NA	NA	NA	NA	Residual	No	NA	Valve box located between 241-TY-105/106, used for waste routing within TY Farm, below grade.
241-TY	SARA 313 Materials	None	NA	NA	NA	NA	NA	NA	NA	No SARA 313 materials listed for the TY farm.
241-TY	Other	None	NA	NA	NA	NA	NA	NA	NA	NA
241-U-101	Tank Contents	241-U-101	NCPLX	530 K gal	Supernate Sludge	Liquid Solid	3 Kgal 22 Kgal	No	NA	Assumed leaker, interim stabilized 9/79.
241-U-102	Tank Contents	241-U-102	NCPLX	530 K gal	Supernate Sludge Saltcake	Liquid Solid Solid	18 Kgal 43 Kgal 313 Kgal	No	NA	Scheduled completion of interim stabilization 10/31/98.
241-U-103	Tank Contents	241-U-103	NCPLX	530 K gal	Supernate Sludge Saltcake	Liquid Solid Solid	13 Kgal 32 Kgal 423 Kgal	No	NA	Scheduled completion of interim stabilization/31/98.
241-U-104	Tank Contents	241-U-104	NCPLX	530 K gal	Sludge	Solid	122 Kgal	No	NA	Assumed leaker, interim stabilized 10/78.
241-U-105	Tank Contents	241-U-105	NCPLX	530 K gal	Supernate Sludge Saltcake	Liquid Solid Solid	37 Kgal 32 Kgal 349 Kgal	No	NA	Scheduled completion of interim stabilization 12/98/31.
241-U-106	Tank Contents	241-U-106	NCPLX	530 K gal	Supernate Sludge Saltcake	Liquid Solid Solid	15 Kgal 26 Kgal 185 Kgal	No	NA	Scheduled completion of interim stabilization 6/30/98.
241-U-107	Tank Contents	241-U-107	DSSF	530 K gal	Supernate Sludge Saltcake	Liquid Solid Solid	31 Kgal 15 Kgal 360 Kgal	No	NA	Scheduled completion of interim stabilization 1/31/99.

Table D3.1-1. Material at Risk Table.[1] (94 sheets)

Field Name	MAR-Subject	MAR-Description	MAR-Classification	Capacity	Material Type	Physical Form	Volume or Activity	Transient	Quantity	Comments
241-U-108	Tank Contents	241-U-108	NCPLX	530 K gal	Supernate Sludge Saltcake	Liquid Solid Solid	24 Kgal 29 Kgal 415 Kgal	No	NA	Scheduled completion of interim stabilization 12/31/98.
241-U-109	Tank Contents	241-U-109	NCPLX	530 K gal	Supernate Sludge Saltcake	Liquid Solid Solid	19 Kgal 48 Kgal 396 Kgal	No	NA	Scheduled completion of interim stabilization 12/31/98.
241-U-110	Tank Contents	241-U-110	NCPLX	530 K gal	Sludge	Solid	186 Kgal	No	NA	Assumed leaker, interim stabilized 12/84 under old criteria, must meet new criteria.
241-U-111	Tank Contents	241-U-111	DSSF	530 K gal	Sludge Saltcake	Solid Solid	26 Kgal 303 Kgal	No	NA	Scheduled completion of interim stabilization 8/31/98.
241-U-112	Tank Contents	241-U-112	NCPLX	530 K gal	Supernate Sludge	Liquid Solid	4 Kgal 45 Kgal	No	NA	Assumed leaker, interim stabilized 9/79 under old criteria, must meet new criteria.
241-U-201	Tank Contents	241-U-201	NCPLX	55 Kgal	Supernate Sludge	Liquid Solid	1 Kgal 4 Kgal	No	NA	NA
241-U-202	Tank Contents	241-U-202	NCPLX	55 Kgal	Supernate Sludge	Liquid Solid	1 Kgal 4 Kgal	No	NA	NA
241-U-203	Tank Contents	241-U-203	NCPLX	55 Kgal	Supernate Sludge	Liquid Solid	1 Kgal 2 Kgal	No	NA	NA
241-U-204	Tank Contents	241-U-204	NCPLX	55 Kgal	Supernate Sludge	Liquid Solid	1 Kgal 2 Kgal	No	NA	NA
244-U	Tank Contents	244-U DCRT	NA	26000 gal	NA	NA	NA	NA	NA	244-U DCRT has not been used.
241-U-301B	Tank Contents	Catch tank 241-U-301-B	Residual	36400 gal	No data	No data	7820 gal	No	NA	Waste from diversion boxes U-151 and U-152.
241-UX-302A	Tank Contents	Catch tank 241-UX-302-A	Residual	17700 gal	No data	No data	2432 gal	No	NA	Waste from diversion box UX-154.
241-U-101	Tank Headspace	241-U-101	NA	NA	NA	Vapor	3145 m3, 220 g NH3	No	NA	NA
241-U-102	Tank Headspace	241-U-102	NA	NA	NA	Vapor	1824 m3, no NH3 present	No	NA	NA
241-U-103	Tank Headspace	241-U-103	NA	NA	NA	Vapor	1468 m3, 810 g NH3	No	NA	NA
241-U-104	Tank Headspace	241-U-104	NA	NA	NA	Vapor	2778 m3, no NH3 present	No	NA	NA
241-U-105	Tank Headspace	241-U-105	NA	NA	NA	Vapor	1657 m3, 410/830 g NH3	No	NA	NA
241-U-106	Tank Headspace	241-U-106	NA	NA	NA	Vapor	2384 m3, 1800/920 g NH3	No	NA	NA

Table D3.1-1. Material at Risk Table.[1] (94 sheets)

Field Name	MAR-Subject	MAR-Description	MAR-Classification	Capacity	Material Type	Physical Form	Volume or Activity	Transient	Quantity	Comments
241-U-107	Tank Headspace	241-U-107	NA	NA	NA	Vapor	1703 m3, 580/980 g NH3	No	NA	NA
241-U-108	Tank Headspace	241-U-108	NA	NA	NA	Vapor	1468 m3, no NH3 present	No	NA	NA
241-U-109	Tank Headspace	241-U-109	NA	NA	NA	Vapor	1487 m3, 440 g NH3	No	NA	NA
241-U-110	Tank Headspace	241-U-110	NA	NA	NA	Vapor	2535 m3, no NH3 present	No	NA	NA
241-U-111	Tank Headspace	241-U-111	NA	NA	NA	Vapor	1994 m3, 1000/100 g NH3	No	NA	NA
241-U-112	Tank Headspace	241-U-112	NA	NA	NA	Vapor	3054 m3, no NH3 present	No	NA	NA
241-U-201	Tank Headspace	241-U-201	NA	NA	NA	Vapor	215 m3, no NH3 present	No	NA	NA
241-U-202	Tank Headspace	241-U-202	NA	NA	NA	Vapor	215 m3, no NH3 present	No	NA	NA
241-U-203	Tank Headspace	241-U-203	NA	NA	NA	Vapor	222 m3, 15 g NH3	No	NA	NA
241-U-204	Tank Headspace	241-U-204	NA	NA	NA	Vapor	222 m3, 0.024 g NH3	No	NA	NA
244-U	Tank Headspace	244-U DCRT	NA	NA	NA	NA	26000 gal	No	NA	244-U DCRT has not been used.
241-U-301B	Tank Headspace	Catch tank 241-U-301-B	NA	No data	NA	Vapor	No data available	No	NA	NA
241-UX-302A	Tank Headspace	Catch tank 241-UX-302-A	NA	NA	NA	Vapor	15268 gal	No	NA	NA
241-U	Rail or Truck Tanker Contents	None	NA	NA	NA	NA	NA	NA	NA	NA
241-U	Contamination on Vehicle	None	NA	NA	NA	NA	NA	NA	NA	NA
241-U	Contamination on Equipment or Tools	Tools abandoned in vertical storage units	Contaminated tools	NA	NA	Solids	Unknown	No *	NA	*Tools to be disposed of.
241-U	Contamination on Equipment or Tools	Hand tool	Tools	NA	NA	Solids	Unknown	Yes *	NA	*Hand tools stored next to Satellite Accumulation Area for in-farm usage.
241-U	Ventilation Filter Contents	Primary	NA	NA	NA	NA	NA	NA	NA	NA
241-U	Ventilation Filter Contents	Annulus	NA	NA	NA	NA	NA	NA	NA	NA

Table D3.1-1. Material at Risk Table.[1] (94 sheets)

Field Name	MAR-Subject	MAR-Description	MAR-Classification	Capacity	Material Type	Physical Form	Volume or Activity	Transient	Quantity	Comments
241-U	Ventilation Filter Contents	Breather	NA	1 R/h at 6 inches.	NA	Particu-late	NA	Yes - disposal in accord w/ WHC-EP-0063-4	NA	Filter efficiency is tested annually and replaced if they fail.
241-U	Contamination In Ventilation System	De-entrainers	NA	NA	NA	NA	NA	NA	NA	NA
241-U	Contamination In Ventilation System	Seal loop	Oil and condensate	1 cup	NA	Liquid	Residual	NA	NA	Seal loops associated with breather filters on tanks.
241-U	Contents of Pipeline and/or Source Tank During Transfer	NA	NA	NA	NA	NA	NA	NA	NA	See transfer line Table 7.
241-U	Contents of Sump or Encasement	NA	NA	NA	NA	NA	NA	NA	NA	NA
241-U-01A-09A	Contamination in Pit or Box	Pump pits U 01A thru 09A	Residual	6820 gal	NA	Residue	Unknown	No	9 pits	NA
241-U-01A	Contamination in Pit or Box	Pump pit U 01A	Residual	6820 gal	NA	Residue	Unknown	No	1 pit	NA
241-U-02A	Contamination in Pit or Box	Pump pit U 02A	Residual	6820 gal	NA	Residue	Unknown	No	1 pit	NA
241-U-03A	Contamination in Pit or Box	Pump pit U 03A	Residual	6820 gal	NA	Residue	Unknown	No	1 pit	NA
241-U-04A	Contamination in Pit or Box	Pump pit U 04A	Residual	6820 gal	NA	Residue	Unknown	No	1 pit	NA
241-U-05A	Contamination in Pit or Box	Pump pit U 05A	Residual	6820 gal	NA	Residue	Unknown	No	1 pit	NA
241-U-06A	Contamination in Pit or Box	Pump pit U 06A	Residual	6820 gal	NA	Residue	Unknown	No	1 pit	NA
241-U-07A	Contamination in Pit or Box	Pump pit U 07A	Residual	6820 gal	NA	Residue	Unknown	No	1 pit	NA
241-U-08A	Contamination in Pit or Box	Pump pit U 08A	Residual	6820 gal	NA	Residue	Unknown	No	1 pit	NA
241-U-09A	Contamination in Pit or Box	Pump pit U 09A	Residual	6820 gal	NA	Residue	Unknown	No	1 pit	NA
241-U-10A	Contamination in Pit or Box	Pump pit U 10A	Residual	2020 gal	NA	Residue	Unknown	No	1 pit	NA
241-U-11A	Contamination in Pit or Box	Pump pit U 11A	Residual	2020 gal	NA	Residue	Unknown	No	1 pit	NA

Table D3.1-1. Material at Risk Table.[1] (94 sheets)

Field Name	MAR-Subject	MAR-Description	MAR-Classification	Capacity	Material Type	Physical Form	Volume or Activity	Transient	Quantity	Comments
241-UR-02B-09B	Contamination in Pit or Box	Distributor pits UR 02B thru 09B	Residual	224 gal	NA	Residue	Unknown	No	1 pit *	*Tank U-101 distributor pit is weather covered. Cover plate in place, volumes were calculated with normal cover blocks.
241-UR-02B	Contamination in Pit or Box	Distributor pit UR 02B	Residual	224 gal	NA	Residue	Unknown	No	1 pit *	*Cover plate in place, volumes were calculated with normal cover blocks.
241-UR-03B	Contamination in Pit or Box	Distributor pit UR 03B	Residual	224 gal	NA	Residue	Unknown	No	1 pit *	*Cover plate in place, volumes were calculated with normal cover blocks.
241-UR-04B	Contamination in Pit or Box	Distributor pit UR 04B	Residual	224 gal	NA	Residue	Unknown	No	1 pit *	*Cover plate in place, volumes were calculated with normal cover blocks.
241-UR-05B	Contamination in Pit or Box	Distributor pit UR 05B	Residual	224 gal	NA	Residue	Unknown	No	1 pit *	*Cover plate in place, volumes were calculated with normal cover blocks.
241-UR-06B	Contamination in Pit or Box	Distributor pit UR 06B	Residual	224 gal	NA	Residue	Unknown	No	1 pit *	*Cover plate in place, volumes were calculated with normal cover blocks.
241-UR-07B	Contamination in Pit or Box	Distributor pit UR 07B	Residual	224 gal	NA	Residue	Unknown	No	1 pit *	*Cover plate in place, volumes were calculated with normal cover blocks.
241-UR-08B	Contamination in Pit or Box	Distributor pit UR 08B	Residual	224 gal	NA	Residue	Unknown	No	1 pit *	*Cover plate in place, volumes were calculated with normal cover blocks.
241-UR-09B	Contamination in Pit or Box	Distributor pit UR 09B	Residual	224 gal	NA	Residue	Unknown	No	1 pit *	*Cover plate in place, volumes were calculated with normal cover blocks.
241-UR-10B	Contamination in Pit or Box	Distributor pit UR 10B	Residual	176 gal	NA	Residue	Unknown	NA	1 pit	NA
241-UR-11B	Contamination in Pit or Box	Distributor pit UR 11B	Residual	176 gal	NA	Residue	Unknown	NA	1 pit	NA
241-U	Contamination in Pit or Box	Sluice pits	Residual	NA	NA	Residue	Unknown	NA	9 pits	All distributor pits in U-Farm are weather covered.
241-U	Contamination in Pit or Box	Condenser pits	Residual	NA	NA	Residue	Unknown	NA	14 pits	All condenser pits in U-Farm are weather covered.
241-U	Contamination in Pit or Box	Saltwell Pit	Residual	NA	NA	Residue	Unknown	NA	1 pit	Tank U-112 only, weather covered.
241-U-PIT	Contamination in Pit or Box	Valve pits 241-U-A, B, C, D	Residual	3142 gal	NA	Residue	Unknown	NA	4 pits	NA

Table D3.1-1. Material at Risk Table.[1] (94 sheets)

Field Name	MAR-Subject	MAR-Description	MAR-Classification	Capacity	Material Type	Physical Form	Volume or Activity	Transient	Quantity	Comments
241-U-A	Contamination in Pit or Box	Valve pit 241-U-A	Residual	3142 gal	NA	Residue	Unknown	NA	1 pit	NA
241-U-B	Contamination in Pit or Box	Valve pit 241-U-B	Residual	3142 gal	NA	Residue	Unknown	NA	1 pit	NA
241-U-C	Contamination in Pit or Box	Valve pit 241-U-C	Residual	3142 gal	NA	Residue	Unknown	NA	1 pit	NA
241-U-D	Contamination in Pit or Box	Valve pit 241-U-D	Residual	3142 gal	NA	Residue	Unknown	NA	1 pit	NA
241-U-151	Contamination in Pit or Box	Diversion box 241-U-151	Residual	7554 gal	NA	Residue	Unknown	NA	1 box	NA
241-U-152	Contamination in Pit or Box	Diversion box 241-U-152	Residual	11331 gal	NA	Residue	Unknown	NA	1 box	NA
241-U-154	Contamination in Pit or Box	Diversion box 241-U-154	Residual	31296 gal	NA	Residue	Unknown	NA	1 box *	*Includes jumper storage, nozzle pit, and pipe pit.
241-U-DIV	Contamination in Pit or Box	Diversion boxes 241-U-153 241-U-252 241-UR-151 241-UR-152 241-UR-153 241-UR-154	Residual	NA	NA	Residue	Unknown	NA	6 boxes	All are weather covered.
241-U-153	Contamination in Pit or Box	Diversion box 241-U-153	Residual	NA	NA	Residue	Unknown	NA	1 box	All are weather covered.
241-U-252	Contamination in Pit or Box	Diversion box 241-U-252	Residual	NA	NA	Residue	Unknown	NA	1 box	All are weather covered.
241-UR-151	Contamination in Pit or Box	Diversion box 241-UR-151	Residual	NA	NA	Residue	Unknown	NA	1 box	All are weather covered.
241-UR-152	Contamination in Pit or Box	Diversion box 241-UR-152	Residual	NA	NA	Residue	Unknown	NA	1 box	All are weather covered.
241-UR-153	Contamination in Pit or Box	Diversion box 241-UR-153	Residual	NA	NA	Residue	Unknown	NA	1 box	All are weather covered.
241-UR-154	Contamination in Pit or Box	Diversion box 241-UR-154	Residual	NA	NA	Residue	Unknown	NA	1 box	All are weather covered.
COB U25	Contamination in Pit or Box	Clean out boxes COB U25 thru U34	Residual	26 gal	NA	Residue	Unknown	NA	7 boxes	NA
COB U26	Contamination in Pit or Box	Clean out box COB U26	Residual	26 gal	NA	Residue	Unknown	NA	1 box	NA
COB U27	Contamination in Pit or Box	Clean out box COB U27	Residual	26 gal	NA	Residue	Unknown	NA	1 box	NA
COB U28	Contamination in Pit or Box	Clean out box COB U28	Residual	26 gal	NA	Residue	Unknown	NA	1 box	NA

Table D3.1-1. Material at Risk Table.[1] (94 sheets)

Field Name	MAR-Subject	MAR-Description	MAR-Classification	Capacity	Material Type	Physical Form	Volume or Activity	Transient	Quantity	Comments
COB U29	Contamination in Pit or Box	Clean out box COB U29	Residual	26 gal	NA	Residue	Unknown	NA	1 box	NA
241-U	SARA 313 Materials	Gas bottles for PCM1B	90% argon / 10% methane	480 cubic feet	NA	Gas	480 cubic feet	Yes	2 bottles	NA
241-U	SARA 313 Materials	Flammable storage cabinet	Spray paint	NA	NA	Aerosol	NA	Yes	Misc spray paint	NA
241-U	Other	Liquid nitrogen for sampling activities	Liquid nitrogen	Large trailer mounted tank	NA	Gas	Unknown	Yes	1 Tank	Tank and trailer located outside the south fence of U-Farm.
241-U	Other	Propane tank	Propane	3 ft. dia. X 6 ft. tank on trailer	NA	Gas	Unknown	Yes	1 Tank	Located on same trailer as liquid nitrogen.
241-U	Other	Propane tank	Propane	4 ft. dia X 6 ft. tank on ground	NA	Gas	Unknown	Yes	1 Tank	Located on ground next to nitrogen trailer.
216-U-12	Other	Crib 216-U-12	NA	NA	NA	NA	NA	NA	NA	This crib received 150,000,000 liters of stack drainage, process condensate, and contaminated water from the 291-U-1 stack, 224-U, 244-WR vault, and 244-U.
216-U-17	Other	Crib 216-U-17	NA	NA	NA	NA	NA	NA	NA	This crib received 2,110,000 liters of neutralized process condensate from the U03 plant.

Table D3.1-1. Material at Risk Table.[1] (94 sheets)

Field Name	MAR-Subject	MAR-Description	MAR-Classification	Capacity	Material Type	Physical Form	Volume or Activity	Transient	Quantity	Comments
216-U-14	Other	Ditch 216-U-14	NA	NA	NA	NA	NA	NA	NA	This ditch received waste from 284-W powerhouse, 2723-W, 2724-W laundry building, 221-U chemical sewer, 224-U cooling water, 241-U-110 condenser tank cooling water, 242-S evaporator condensate and cooling water, 207-U basin, and additional waste from 221-U, 224-U and 271-U. A 1966 release consisted of ~3000 liters of 50% reprocessed nitric acid. The total release consisted of ~225,000 lb of corrosion solution (pH less than 2.0) and 100 lb of uranium.
U Satellite Accumulation Area	Other	Satellite accumulation area	RCRA mixed wastes	6-55 gal mixed waste drums (maximum)	NA	Solid	Low level (less than class C)	Yes	6-55 gal drums max capacity for each satellite enclosure	Inventories removed when filled, transported to 209-E 90 day storage facility.
241-EW-151	Contamination in Pit or Box	Access pit	Residual contamination	1900 gal (5' x 7'-10" x 6'-6")	NA	Residue	NA	No	NA	NA
241-EW-151	Contamination in Pit or Box	Catch tank pit	Residual contamination	4240 gal (8'6" x 8' x 8'4")	NA	Residue	NA	No	NA	NA
241-EW-151	Contamination in Pit or Box	Nozzle/pump pit	Residual contamination	1300 gal (8' x 6' x 3'8")	NA	Residue	NA	No	NA	NA
241-EW-151	Contamination in Ventilation System	De-entrainers	NA	NA	NA	NA	NA	NA	NA	No de-entrainer, passive ventilation only.
241-EW-151	Contamination in Ventilation System	Seal loop	Process condensate	NA	NA	Liquid	Residual	No	one	Seal loop associated with catch tank breather filter assembly.
241-EW-151	Contamination on Equipment or Tools	None	NA	NA	NA	NA	NA	NA	NA	No contaminated tools stored near vent station.
241-EW-151	Contamination on Vehicle	None	NA	NA	NA	NA	NA	NA	NA	No contaminated vehicles stored with catch station.

Table D3.1-1. Material at Risk Table.[1] (94 sheets)

Field Name	MAR-Subject	MAR-Description	MAR-Classification	Capacity	Material Type	Physical Form	Volume or Activity	Transient	Quantity	Comments
241-EW-151	Contents of Pipeline and/or source tank during transfer	NA	NA	NA	NA	NA	NA	NA	NA	See transfer pipeline Table 7.
241-EW-151	Contents of Sump or Encasement	None	NA	NA	NA	NA	NA	NA	NA	See catch tank pit below.
241-EW-151	Other	None	NA	NA	NA	NA	NA	NA	NA	NA
241-EW-151	Rail or Truck Tanker Contents	None	NA	NA	NA	NA	NA	NA	NA	No rail or truck tankers associated with vent station.
241-EW-151	SARA 313 Materials	None	NA	NA	NA	NA	NA	NA	NA	NA
241-EW-151	Tank Contents	241-EW-151 catch tank within vent station	rainwater	800 gal	NA	Liquid	351 gal	No	NA	Catch tank serves the vent station for the cross site transfer line. Tank was about to be pumped during walkdown.
241-EW-151	Tank Headspace	241-EW-151 catch tank	NA	449 gal (capacity-contents)	NA	NA	NA	NA	NA	No data available. Tank was about to be pumped.
241-EW-151	Ventilation Filter Contents	Breather filter	Residual contamination	1 R/hr at six inches	NA	Residue	Unknown*	Yes	NA	*Breather filter for catch tank. Catch tank currently thought to contain rainwater.

[1]This table was generated from a relational database of hazards information. Changes from the previous revision of this table have been independently reviewed, but are not highlighted in Redline.

The information in this table was taken from WHC-SD-WM-HIE-007, 1996, Tank Waste Remediation System FSAR Hazard Identification Facility Configuration Verification Report, Rev. 0, Westinghouse Hanford Company, Richland, Washington. "Transfer line Table 7" in the comments column refers to WHC-SD-WM-HIE-007, Appendix G.

*Refer to comment items in the same data row.
**Refer to comment items in the same data row.
WHC-EP-0063, 1993, Hanford Site Solid Waste Acceptance Criteria, Rev. 4, Westinghouse Hanford Company, Richland, Washington.

CC = complexant concentrate waste.
COB = cleanout box.
DC = dilute complexed waste.
DOT = U.S. Department of Transportation.
FFTF = Fast Flux Test Facility.
HEPA = high-efficiency particulate air (filter).
IMUST = inactive miscellaneous underground storage tank.
MAR = material at risk.
NA = not applicable.
NCAW = neutralized current acid waste.
NCPLX = non-complexed waste.
NHW = neutralized high-level waste.
RCRA = Resource Conservation and Recovery Act of 1976.
RMW = radioactive mixed waste.
SARA = Superfund Amendments and Reauthorization Act of 1986.
SWP = special work procedure (refers to protective clothing worn in radiation zone).
TWRS = Tank Waste Remediation System.

Table D3.1-2. TWRS Facility Configurations. (12 sheets)

Facility Name	Type	Ventilation	Comment Ventilation	Air Lift Ciculator	Comment ALC	Steam Coils	Comment Steam Coils	Mixer Pumps	Comments Mixer Pumps
241-A-101	Single shell tank	Passive	One breather filter with one seal loop	No		No		No	
241-A-102	Single shell tank	Passive	One breather filter with one seal loop	No		No		No	
241-A-103	Single shell tank	Passive	One breather filter with one seal loop	No		No		No	
241-A-104	Single shell tank	Passive	One breather filter with one seal loop	No		No		No	
241-A-105	Single shell tank	Passive	One breather filter with one seal loop	No		No		No	
241-A-106	Single shell tank	Passive	One breather filter with one seal loop	No		No		No	
241-AN-101	Double shell tank	Active	Annulus has filtered inlet, K1 primary tank ventilation system, K2 annulus ventilation system	No		No		No	
241-AN-102	Double shell tank	Active	Annulus has filtered inlet, K1 primary tank ventilation system, K2 annulus ventilation system	No		No		No	
241-AN-103	Double shell tank	Active	Annulus has filtered inlet, K1 primary tank ventilation system, K2 annulus ventilation system	No		No		No	
241-AN-104	Double shell tank	Active	Annulus has filtered inlet, K1 primary tank ventilation system, K2 annulus ventilation system	No		No		No	
241-AN-105	Double shell tank	Active	Annulus has filtered inlet, K1 primary tank ventilation system, K2 annulus ventilation system	No		No		No	

Table D3.1-2. TWRS Facility Configurations. (12 sheets)

Facility Name	Type	Ventilation	Comment Ventilation	Air Lift Ciculator	Comment ALC	Steam Coils	Comment Steam Coils	Mixer Pumps	Comments Mixer Pumps
241-AN-106	Double shell tank	Active	Annulus has filtered inlet, K1 primary tank ventilation system, K2 annulus ventilation system	No		No		No	
241-AN-107	Double shell tank	Active	Annulus has filtered inlet, K1 primary tank ventilation system, K2 annulus ventilation system	Yes		No		No	
241-AP-101	Double shell tank	Active	K1 primary tank ventilation system, K2 annulus ventilation system	No		No		No	
241-AP-102	Double shell tank	Active	K1 primary tank ventilation system, K2 annulus ventilation system	No		No		No	
241-AP-103	Double shell tank	Active	K1 primary tank ventilation system, K2 annulus ventilation system	No		No		No	
241-AP-104	Double shell tank	Active	K1 primary tank ventilation system, K2 annulus ventilation system	No		No		No	
241-AP-105	Double shell tank	Active	K1 primary tank ventilation system, K2 annulus ventilation system	No		No		No	
241-AP-106	Double shell tank	Active	K1 primary tank ventilation system, K2 annulus ventilation system	No		No		No	
241-AP-107	Double shell tank	Active	K1 primary tank ventilation system, K2 annulus ventilation system	No		No		No	
241-AP-108	Double shell tank	Active	K1 primary tank ventilation system, K2 annulus ventilation system	No		No		No	

Table D3.1-2. TWRS Facility Configurations. (12 sheets)

Facility Name	Type	Ventilation	Comment Ventilation	Air Lift Ciculator	Comment ALC	Steam Coils	Comment Steam Coils	Mixer Pumps	Comments Mixer Pumps
241-AW-101	Double shell tank	Active	K1 primary tank ventilation system, K2 annulus ventilation system	No		No		No	
241-AW-102	Double shell tank	Active	K1 primary tank ventilation system, K2 annulus ventilation system	Yes		No		No	
241-AW-103	Double shell tank	Active	K1 primary tank ventilation system, K2 annulus ventilation system	No		No		No	
241-AW-104	Double shell tank	Active	K1 primary tank ventilation system, K2 annulus ventilation system	No		No		No	
241-AW-105	Double shell tank	Active	K1 primary tank ventilation system, K2 annulus ventilation system	No		No		No	
241-AW-106	Double shell tank	Active	K1 primary tank ventilation system, K2 annulus ventilation system	No		No		No	
241-AX-101	Single shell tank	Passive	One breather filter with one seal loop	No	The ALC is still in the tank. There are flanged covers on the risers.	No		No	
241-AX-102	Single shell tank	Passive	One breather filter with one seal loop	No	The ALC is still in the tank. There are flanged covers on the risers.	No		No	
241-AX-103	Single shell tank	Passive	One breather filter with one seal loop	No	The ALC is still in the tank. There are flanged covers on the risers.	No		No	
241-AX-104	Single shell tank	Passive	One breather filter with one seal loop	No	The ALC is still in the tank. There are flanged covers on the risers.	No		No	

Table D3.1-2. TWRS Facility Configurations. (12 sheets)

Facility Name	Type	Ventilation	Comment Ventilation	Air Lift Ciculator	Comment ALC	Steam Coils	Comment Steam Coils	Mixer Pumps	Comments Mixer Pumps
241-AY-101	Double shell tank	Active	Tank farm A primary ventilation system			No	Steam coils in tank, steam to facility is blanked off	No	
241-AY-102	Double shell tank	Active	Tank farm A primary ventilation system			No	Steam coils in tank, steam to facility is blanked off	No	
241-AZ-101	Double shell tank	Active	Tank farm A primary ventilation system	Yes		No	Steam coils in tank, steam to facility is blanked off	No	Two new mixer pumps are being installed in AZ-101 for sludge washing (Project W-151).
241-AZ-102	Double shell tank	Active	Tank farm A primary ventilation system	Yes		No	Steam coils in tank, steam to facility is blanked off	No	
241-B-101	Single shell tank	Passive	One breather filter with one seal loop	No		No	No steam to B Tank Farm	No	
241-B-102	Single shell tank	Passive	One breather filter with one seal loop	No		No	No steam to B Tank Farm	No	
241-B-103	Single shell tank	Passive	One breather filter with one seal loop	No		No	No steam to B Tank Farm	No	
241-B-104	Single shell tank	Passive	One breather filter with one seal loop	No		No	No steam to B Tank Farm	No	
241-B-105	Single shell tank	Passive	One breather filter with one seal loop	No		No	No steam to B Tank Farm	No	
241-B-106	Single shell tank	Passive	One breather filter with one seal loop	No		No	No steam to B Tank Farm	No	
241-B-107	Single shell tank	Passive	One breather filter with one seal loop	No		No	No steam to B Tank Farm	No	
241-B-108	Single shell tank	Passive	One breather filter with one seal loop	No		No	No steam to B Tank Farm	No	
241-B-109	Single shell tank	Passive	One breather filter with one seal loop	No		No	No steam to B Tank Farm	No	
241-B-110	Single shell tank	Passive	One breather filter with one seal loop	No		No	No steam to B Tank Farm	No	
241-B-111	Single shell tank	Passive	One breather filter with one seal loop	No		No	No steam to B Tank Farm	No	

Table D3.1-2. TWRS Facility Configurations. (12 sheets)

Facility Name	Type	Ventilation	Comment Ventilation	Air Lift Ciculator	Comment ALC	Steam Coils	Comment Steam Coils	Mixer Pumps	Comments Mixer Pumps
241-B-112	Single shell tank	Passive	One breather filter with one seal loop	No		No	No steam to B Tank Farm	No	
241-B-201	Single shell tank	Passive	One breather filter with one seal loop	No		No	No steam to B Tank Farm	No	
241-B-202	Single shell tank	Passive	One breather filter with one seal loop	No		No	No steam to B Tank Farm	No	
241-B-203	Single shell tank	Passive	One breather filter with one seal loop	No		No	No steam to B Tank Farm	No	
241-B-204	Single shell tank	Passive	One breather filter with one seal loop	No		No	No steam to B Tank Farm	No	
241-BX-101	Single shell tank	Passive	One breather filter with one seal loop	No		No	No steam to BX Tank Farm	No	
241-BX-102	Single shell tank	Passive	One breather filter with one seal loop	No		No	No steam to BX Tank Farm	No	
241-BX-103	Single shell tank	Passive	One breather filter with one seal loop	No		No	No steam to BX Tank Farm	No	
241-BX-104	Single shell tank	Passive	One breather filter with one seal loop	No		No	No steam to BX Tank Farm	No	
241-BX-105	Single shell tank	Passive	One breather filter with one seal loop	No		No	No steam to BX Tank Farm	No	
241-BX-106	Single shell tank	Passive	One breather filter with one seal loop	No		No	No steam to BX Tank Farm	No	
241-BX-107	Single shell tank	Passive	One breather filter with one seal loop	No		No	No steam to BX Tank Farm	No	
241-BX-108	Single shell tank	Passive	One breather filter with one seal loop	No		No	No steam to BX Tank Farm	No	
241-BX-109	Single shell tank	Passive	One breather filter with one seal loop	No		No	No steam to BX Tank Farm	No	
241-BX-110	Single shell tank	Passive	One breather filter with one seal loop	No		No	No steam to BX Tank Farm	No	
241-BX-111	Single shell tank	Passive	One breather filter with one seal loop	No		No	No steam to BX Tank Farm	No	
241-BX-112	Single shell tank	Passive	One breather filter with one seal loop	No		No	No steam to BX Tank Farm	No	

Table D3.1-2. TWRS Facility Configurations. (12 sheets)

Facility Name	Type	Ventilation	Comment Ventilation	Air Lift Ciculator	Comment ALC	Steam Coils	Comment Steam Coils	Mixer Pumps	Comments Mixer Pumps
241-BY-101	Single shell tank	Passive	One breather filter with one seal loop	No	Present, not presently operable	No	No steam to BY Tank Farm	No	
241-BY-102	Single shell tank	Passive	One breather filter with one seal loop	No		No	No steam to BY Tank Farm	No	
241-BY-103	Single shell tank	Passive	One breather filter with one seal loop	No	Present, not presently operable	No	No steam to BY Tank Farm	No	
241-BY-104	Single shell tank	Passive	One breather filter with one seal loop	No		No	No steam to BY Tank Farm	No	
241-BY-105	Single shell tank	Passive	One breather filter with one seal loop	No	Present, not presently operable	No	No steam to BY Tank Farm	No	
241-BY-106	Single shell tank	Passive	One breather filter with one seal loop	No	Present, not presently operable	No	No steam to BY Tank Farm	No	
241-BY-107	Single shell tank	Passive	One breather filter with one seal loop	No	Present, not presently operable	No	No steam to BY Tank Farm	No	
241-BY-108	Single shell tank	Passive	One breather filter with one seal loop	No	Present, not presently operable	No	No steam to BY Tank Farm	No	
241-BY-109	Single shell tank	Passive	One breather filter with one seal loop	No		No	No steam to BY Tank Farm	No	
241-BY-110	Single shell tank	Passive	One breather filter with one seal loop	No	Present, not presently operable	No	No steam to BY Tank Farm	No	
241-BY-111	Single shell tank	Passive	One breather filter with one seal loop	No	Present, not presently operable	No	No steam to BY Tank Farm	No	
241-BY-112	Single shell tank	Passive	One breather filter with one seal loop	No		No	No steam to BY Tank Farm	No	
241-C-101	Single shell tank	Passive	One breather filter with one seal loop	No		No	No steam to C Tank Farm	No	
241-C-102	Single shell tank	Passive	One breather filter with one seal loop	No		No	No steam to C Tank Farm	No	
241-C-103	Single shell tank	Passive	One breather filter with one seal loop	No		No	No steam to C Tank Farm	No	
241-C-104	Single shell tank	Passive	One breather filter with one seal loop	No		No	No steam to C Tank Farm	No	
241-C-105	Single shell tank	Active	Exhauster	No		No	No steam to C Tank Farm	No	

Table D3.1-2. TWRS Facility Configurations. (12 sheets)

Facility Name	Type	Ventilation	Comment Ventilation	Air Lift Ciculator	Comment ALC	Steam Coils	Comment Steam Coils	Mixer Pumps	Comments Mixer Pumps
241-C-106	Single shell tank	Active	Exhauster	No		No	No steam to C Tank Farm	No	
241-C-107	Single shell tank	Passive	One breather filter with one seal loop	No		No	No steam to C Tank Farm	No	
241-C-108	Single shell tank	Passive	One breather filter with one seal loop	No		No	No steam to C Tank Farm	No	
241-C-109	Single shell tank	Passive	One breather filter with one seal loop	No		No	No steam to C Tank Farm	No	
241-C-110	Single shell tank	Passive	One breather filter with one seal loop	No		No	No steam to C Tank Farm	No	
241-C-111	Single shell tank	Passive	One breather filter with one seal loop	No		No	No steam to C Tank Farm	No	
241-C-112	Single shell tank	Passive	One breather filter with one seal loop	No		No	No steam to C Tank Farm	No	
241-C-201	Single shell tank	Passive	One breather filter with one seal loop	No		No	No steam to C Tank Farm	No	
241-C-202	Single shell tank	Passive	One breather filter with one seal loop	No		No	No steam to C Tank Farm	No	
241-C-203	Single shell tank	Passive	One breather filter with one seal loop	No		No	No steam to C Tank Farm	No	
241-C-204	Single shell tank	Passive	One breather filter with one seal loop	No		No	No steam to C Tank Farm	No	
241-S-101	Single shell tank	Passive	One breather filter with one seal loop	No		No	No steam to S Tank Farm	No	
241-S-102	Single shell tank	Passive	One breather filter with one seal loop	No		No	No steam to S Tank Farm	No	
241-S-103	Single shell tank	Passive	One breather filter with one seal loop	No		No	No steam to S Tank Farm	No	
241-S-104	Single shell tank	Passive	One breather filter with one seal loop	No		No	No steam to S Tank Farm	No	
241-S-105	Single shell tank	Passive	One breather filter with one seal loop	No		No	No steam to S Tank Farm	No	
241-S-106	Single shell tank	Passive	One breather filter with one seal loop	No		No	No steam to S Tank Farm	No	

Table D3.1-2. TWRS Facility Configurations. (12 sheets)

Facility Name	Type	Ventilation	Comment Ventilation	Air Lift Ciculator	Comment ALC	Steam Coils	Comment Steam Coils	Mixer Pumps	Comments Mixer Pumps
241-S-107	Single shell tank	Passive	One breather filter with one seal loop	No		No	No steam to S Tank Farm	No	
241-S-108	Single shell tank	Passive	One breather filter with one seal loop	No		No	No steam to S Tank Farm	No	
241-S-109	Single shell tank	Passive	One breather filter with one seal loop	No		No	No steam to S Tank Farm	No	
241-S-110	Single shell tank	Passive	One breather filter with one seal loop	No		No	No steam to S Tank Farm	No	
241-S-111	Single shell tank	Passive	One breather filter with one seal loop	No		No	No steam to S Tank Farm	No	
241-S-112	Single shell tank	Passive	One breather filter with one seal loop	No		No	No steam to S Tank Farm	No	
241-SX-101	Single shell tank	Active	Vented through a shared underground piping system to SX-109	No		No	No steam to SX Tank Farm	No	
241-SX-102	Single shell tank	Active	Vented through a shared underground piping system to SX-109	No		No	No steam to SX Tank Farm	No	
241-SX-103	Single shell tank	Active	Vented through a shared underground piping system to SX-109	No		No	No steam to SX Tank Farm	No	
241-SX-104	Single shell tank	Active	Vented through a shared underground piping system to SX-109	No		No	No steam to SX Tank Farm	No	
241-SX-105	Single shell tank	Active	Vented through a shared underground piping system to SX-109	No		No	No steam to SX Tank Farm	No	
241-SX-106	Single shell tank	Active	Vented through a shared underground piping system to SX-109	No		No	No steam to SX Tank Farm	No	
241-SX-107	Single shell tank	Active	Vented to an above ground shared system	No		No	No steam to SX Tank Farm	No	
241-SX-108	Single shell tank	Active	Vented to an above ground shared system	No		No	No steam to SX Tank Farm	No	
241-SX-109	Single shell tank	Active	Vented to an above ground shared system	No		No	No steam to SX Tank Farm	No	

Table D3.1-2. TWRS Facility Configurations. (12 sheets)

Facility Name	Type	Ventilation	Comment Ventilation	Air Lift Ciculator	Comment ALC	Steam Coils	Comment Steam Coils	Mixer Pumps	Comments Mixer Pumps
241-SX-110	Single shell tank	Active	Vented to an above ground shared system	No		No	No steam to SX Tank Farm	No	
241-SX-111	Single shell tank	Active	Vented to an above ground shared system	No		No	No steam to SX Tank Farm	No	
241-SX-112	Single shell tank	Active	Vented to an above ground shared system	No		No	No steam to SX Tank Farm	No	
241-SX-113	Single shell tank	Passive		No		No	No steam to SX Tank Farm	No	
241-SX-114	Single shell tank	Active	Vented to an above ground shared system	No		No	No steam to SX Tank Farm	No	
241-SX-115	Single shell tank	Passive		No		No	No steam to SX Tank Farm	No	
241-SY-101	Double shell tank	Active	Shared ventilation system	No		No	No steam to SY Tank Farm	Yes	
241-SY-102	Double shell tank	Active	Shared ventilation system	No		No	No steam to SY Tank Farm	No	
241-SY-103	Double shell tank	Active	Shared ventilation system	No		No	No steam to SY Tank Farm	No	
241-T-101	Single shell tank	Passive	One breather filter with one seal loop	No		No		No	
241-T-102	Single shell tank	Passive	One breather filter with one seal loop	No		No		No	
241-T-103	Single shell tank	Passive	One breather filter with one seal loop	No		No		No	
241-T-104	Single shell tank	Passive	One breather filter with one seal loop	No		No		No	
241-T-105	Single shell tank	Passive	One breather filter with one seal loop	No		No		No	
241-T-106	Single shell tank	Passive	One breather filter with one seal loop	No		No		No	
241-T-107	Single shell tank	Passive	One breather filter with one seal loop	No		No		No	
241-T-108	Single shell tank	Passive	One breather filter with one seal loop	No		No		No	

Table D3.1-2. TWRS Facility Configurations. (12 sheets)

Facility Name	Type	Ventilation	Comment Ventilation	Air Lift Ciculator	Comment ALC	Steam Coils	Comment Steam Coils	Mixer Pumps	Comments Mixer Pumps
241-T-109	Single shell tank	Passive	One breather filter with one seal loop	No		No		No	
241-T-110	Single shell tank	Passive	One breather filter with one seal loop	No		No		No	
241-T-111	Single shell tank	Passive	One breather filter with one seal loop	No		No		No	
241-T-112	Single shell tank	Passive	One breather filter with one seal loop	No		No		No	
241-T-201	Single shell tank	Passive	One breather filter with one seal loop	No		No		No	
241-T-202	Single shell tank	Passive	One breather filter with one seal loop	No		No		No	
241-T-203	Single shell tank	Passive	One breather filter with one seal loop	No		No		No	
241-T-204	Single shell tank	Passive	One breather filter with one seal loop	No		No		No	
241-TX-101	Single shell tank	Passive	One breather filter with one seal loop	No		No		No	
241-TX-102	Single shell tank	Passive	One breather filter with one seal loop	No		No		No	
241-TX-103	Single shell tank	Passive	One breather filter with one seal loop	No		No		No	
241-TX-104	Single shell tank	Passive	One breather filter with one seal loop	No		No		No	
241-TX-105	Single shell tank	Passive	One breather filter with one seal loop	No		No		No	
241-TX-106	Single shell tank	Passive	One breather filter with one seal loop	No		No		No	
241-TX-107	Single shell tank	Passive	One breather filter with one seal loop	No		No		No	
241-TX-108	Single shell tank	Passive	One breather filter with one seal loop	No		No		No	
241-TX-109	Single shell tank	Passive	One breather filter with one seal loop	No		No		No	

Table D3.1-2. TWRS Facility Configurations. (12 sheets)

Facility Name	Type	Ventilation	Comment Ventilation	Air Lift Ciculator	Comment ALC	Steam Coils	Comment Steam Coils	Mixer Pumps	Comments Mixer Pumps
241-TX-110	Single shell tank	Passive	One breather filter with one seal loop	No		No		No	
241-TX-111	Single shell tank	Passive	One breather filter with one seal loop	No		No		No	
241-TX-112	Single shell tank	Passive	One breather filter with one seal loop	No		No		No	
241-TX-113	Single shell tank	Passive	One breather filter with one seal loop	No		No		No	
241-TX-114	Single shell tank	Passive	One breather filter with one seal loop	No		No		No	
241-TX-115	Single shell tank	Passive	One breather filter with one seal loop	No		No		No	
241-TX-116	Single shell tank	Passive	One breather filter with one seal loop	No		No		No	
241-TX-117	Single shell tank	Passive	One breather filter with one seal loop	No		No		No	
241-TX-118	Single shell tank	Passive	One breather filter with one seal loop	No		No		No	
241-TY-101	Single shell tank	Passive	One breather filter with one seal loop	No		No		No	
241-TY-102	Single shell tank	Passive	One breather filter with one seal loop	No		No		No	
241-TY-103	Single shell tank	Passive	One breather filter with one seal loop	No		No		No	
241-TY-104	Single shell tank	Passive	One breather filter with one seal loop	No		No		No	
241-TY-105	Single shell tank	Passive	One breather filter with one seal loop	No		No		No	
241-TY-106	Single shell tank	Passive	One breather filter with one seal loop	No		No		No	
241-U-101	Single shell tank	Passive	One breather filter with one seal loop	No		No		No	
241-U-102	Single shell tank	Passive	One breather filter with one seal loop	No		No		No	

Table D3.1-2. TWRS Facility Configurations. (12 sheets)

Facility Name	Type	Ventilation	Comment Ventilation	Air Lift Ciculator	Comment ALC	Steam Coils	Comment Steam Coils	Mixer Pumps	Comments Mixer Pumps
241-U-103	Single shell tank	Passive	One breather filter with one seal loop	No		No		No	
241-U-104	Single shell tank	Passive	One breather filter with one seal loop	No		No		No	
241-U-105	Single shell tank	Passive	One breather filter with one seal loop	No		No		No	
241-U-106	Single shell tank	Passive	One breather filter with one seal loop	No		No		No	
241-U-107	Single shell tank	Passive	One breather filter with one seal loop	No		No		No	
241-U-108	Single shell tank	Passive	One breather filter with one seal loop	No		No		No	
241-U-109	Single shell tank	Passive	One breather filter with one seal loop	No		No		No	
241-U-110	Single shell tank	Passive	One breather filter with one seal loop	No		No		No	
241-U-111	Single shell tank	Passive	One breather filter with one seal loop	No		No		No	
241-U-112	Single shell tank	Passive	One breather filter with one seal loop	No		No		No	
241-U-201	Single shell tank	Passive	One breather filter with one seal loop	No		No		No	
241-U-202	Single shell tank	Passive	One breather filter with one seal loop	No		No		No	
241-U-203	Single shell tank	Passive	One breather filter with one seal loop	No		No		No	
241-U-204	Single shell tank	Passive	One breather filter with one seal loop	No		No		No	

ALC = air lift circulator.

Table D3.1-3. TWRS Tank Unique Phenomena. (43 Sheets)

Field Name	Type	Flammable Gas	Ferrocyanide	Organics Separable Phase	TOC in Liquids	TOC in Solids	High Heat	Pyrophorics	Syphoning	Criticality	Corrosivity
				Separable Phase	TOC in liquids (>10 g/L)	TOC in solids >4.5 wt (dry basis)	Heat generation rate >26,000 BTU				
Legend Boxes->		Does it exist? (yes/no) Provide reference.	Does it exist? (yes/no) Provide reference.	Does it exist? (yes/no) Provide reference.	Does it exist? (yes/no) Provide reference.	Does it exist? (yes/no) Provide reference	Does it exist? (yes/no) Provide reference.	Does it exist? (yes/no) Provide reference.	Does potential exist? Provide reference.	Does potential exist? Provide reference.	Does potential exist? Provide reference.
A FARM											
241-A-101	Single shell tank	Facility Group 2 GRE - Yes Small Spontaneous Large Induced Steady State - Yes HNF-SD-WM-BIO-001, App E	No, Meacham, 1996, WHC-SD-WM-SARR-038, Rev 1.	No, PNNL Letter, from Huckaby to Meacham OT: 073096.	Unknown or currently undocumented	No, Webb, 1996, WHC-SD-WM-SARR-033, Rev 1	No, Kummerer, 1995, WHC-SD-WM-SARR-010, Rev 1.	No, SAIC, 1996, WHC-SD-WM-HIE-007, Rev. 0	No, Syphoning PHA, 1996, WHC-SD-WM-TI-759, Rev. 0	No, Bratzel 1996, WHC-SD-WM-TI-725	No, Anantatmula 1994 WHC-EP-0772
241-A-102	Single shell tank	Facility Group 3 GRE - Yes Small Induced Steady State - Yes HNF-SD-WM-BIO-001, App E	No, Meacham, 1996, WHC-SD-WM-SARR-038, Rev 1.	No, PNNL Letter, from Huckaby to Meacham OT: 073096.	No, Jo, 1995 WHC-SD-WM-DP-136, Rev. 0	No, Webb, 1996, WHC-SD-WM-SARR-033, Rev 1	No, Kummerer, 1995, WHC-SD-WM-SARR-010, Rev 1.	No, SAIC, 1996, WHC-SD-WM-HIE-007, Rev. 0	No, Syphoning PHA, 1996, WHC-SD-WM-TI-759, Rev. 0	No, Bratzel 1996, WHC-SD-WM-TI-725	No, Anantatmula 1994 WHC-EP-0772
241-A-103	Single shell tank	Facility Group 2 GRE - Yes Small Spontaneous Large Induced Steady State - Yes HNF-SD-WM-BIO-001, App E	No, Meacham, 1996, WHC-SD-WM-SARR-038, Rev 1.	No, PNNL Letter, from Huckaby to Meacham OT: 073096.	Unknown or currently undocumented	No, Webb, 1996, WHC-SD-WM-SARR-033, Rev 1	No, Kummerer, 1995, WHC-SD-WM-SARR-010, Rev 1.	No, SAIC, 1996, WHC-SD-WM-HIE-007, Rev. 0	No, Syphoning PHA, 1996, WHC-SD-WM-TI-759, Rev. 0	No, Bratzel 1996, WHC-SD-WM-TI-725	No, Anantatmula 1994 WHC-EP-0772

Table D3.1-3. TWRS Tank Unique Phenomena. (43 Sheets)

Field Name	Type	Flammable Gas	Ferrocyanide	Organics Separable Phase	TOC in Liquids	TOC in Solids	High Heat	Pyrophorics	Syphoning	Criticality	Corrosivity
241-A-104	Single shell tank	Facility Group 3 GRE - Yes Small Induced Steady State - Yes HNF-SD-WM-BIO-001, App E	No, Meacham, 1996, WHC-SD-WM-SARR-038, Rev 1.	Yes, PNNL Letter, from Huckaby to Meacham OT: 073096.	Unknown or currently undocumented	Unknown or currently undocumented	Yes, Kummerer, 1995, WHC-SD-WM-SARR-010, Rev 1.	No, SAIC, 1996, WHC-SD-WM-HIE-007, Rev. 0	No, Syphoning PHA, 1996, WHC-SD-WM-TI-759, Rev. 0	No, Bratzel 1996, WHC-SD-WM-TI-725	No, Anantatmula 1994 WHC-EP-0772
241-A-105	Single shell tank	Facility Group 3 GRE - Yes Small Induced Steady State - Yes HNF-SD-WM-BIO-001, App E	No, Meacham, 1996, WHC-SD-WM-SARR-038, Rev 1.	Yes, PNNL Letter, from Huckaby to Meacham OT: 073096.	No, Hodgson 1995 74A30-95-018	Unknown or currently undocumented	Yes, Kummerer, 1995, WHC-SD-WM-SARR-010, Rev 1.	No, SAIC, 1996, WHC-SD-WM-HIE-007, Rev. 0	No, Syphoning PHA, 1996, WHC-SD-WM-TI-759, Rev. 0	No, Bratzel 1996, WHC-SD-WM-TI-725	No, Anantatmula 1994 WHC-EP-0772
241-A-106	Single shell tank	Facility Group 3 GRE - Yes Small Induced Steady State - Yes HNF-SD-WM-BIO-001, App E	No, Meacham, 1996, WHC-SD-WM-SARR-038, Rev 1.	Yes, PNNL Letter, from Huckaby to Meacham OT: 073096.	Unknown or currently undocumented	No, Webb, 1996, WHC-SD-WM-SARR-033, Rev 1	No, Kummerer, 1995, WHC-SD-WM-SARR-010, Rev 1.	No, SAIC, 1996, WHC-SD-WM-HIE-007, Rev. 0	No, Syphoning PHA, 1996, WHC-SD-WM-TI-759, Rev. 0	No, Bratzel 1996, WHC-SD-WM-TI-725	No, Anantatmula 1994 WHC-EP-0772
AN FARM											
241-AN-101	Double shell tank	Facility Group 2 GRE - Yes Small Spontaneous Large Induced Steady State - Yes HNF-SD-WM-BIO-001, App E	No, Meacham, 1996, WHC-SD-WM-SARR-038, Rev 1.	Yes, PNNL Letter, from Huckaby to Meacham OT: 073096.	No, SAIC, 1996, WHC-SD-WM-HIE-007, Rev. 0	Unknown or currently undocumented	No (but potential for Tank Bump), Kummerer, 1995, WHC-SD-WM-SARR-010, Rev 1.	No, SAIC, 1996, WHC-SD-WM-HIE-007, Rev. 0	No, Syphoning PHA, 1996, WHC-SD-WM-TI-759, Rev. 0	No, Bratzel 1996, WHC-SD-WM-TI-725	No, SAIC, 1996, WHC-SD-WM-HIE-007, Rev. 0
241-AN-102	Double shell tank	Facility Group 2 GRE - Yes Small Spontaneous Large Induced Steady State - Yes HNF-SD-WM-BIO-001, App E	No, Meacham, 1996, WHC-SD-WM-SARR-038, Rev 1.	Yes, PNNL Letter, from Huckaby to Meacham OT: 073096.	Yes, Esch, 1996, WHC-SD-WM-DP-165, Rev. 0	Yes, Esch, 1996, WHC-SD-WM-DP-165, Rev. 0	Yes, Kummerer, 1995, WHC-SD-WM-SARR-010, Rev 1.	No, SAIC, 1996, WHC-SD-WM-HIE-007, Rev. 0	No, Syphoning PHA, 1996, WHC-SD-WM-TI-759, Rev. 0	No, Bratzel 1996, WHC-SD-WM-TI-725	Yes, SAIC, 1996, WHC-SD-WM-HIE-007, Rev. 0

Table D3.1-3. TWRS Tank Unique Phenomena. (43 Sheets)

Field Name	Type	Flammable Gas	Ferrocyanide	Organics Separable Phase	TOC in Liquids	TOC in Solids	High Heat	Pyrophorics	Syphoning	Criticality	Corrosivity
241-AN-103	Double shell tank	Facility Group 1 GRE - Yes Large Spontaneous Large Induced Steady State - Yes HNF-SD-WM-BIO-001, App E	No, Meacham, 1996, WHC-SD-WM-SARR-038, Rev 1.	Yes, PNNL Letter, from Huckaby to Meacham OT: 073096.	No, SAIC, 1996, WHC-SD-WM-HIE-007, Rev. 0	No, SAIC, 1996, WHC-SD-WM-HIE-007, Rev. 0	Yes, Kummerer, 1995, WHC-SD-WM-SARR-010, Rev 1.	No, SAIC, 1996, WHC-SD-WM-HIE-007, Rev. 0	No, Syphoning PHA, 1996, WHC-SD-WM-TI-759, Rev. 0	No, Bratzel 1996, WHC-SD-WM-TI-725	No, SAIC, 1996, WHC-SD-WM-HIE-007, Rev. 0
241-AN-104	Double shell tank	Facility Group 1 GRE - Yes Large Spontaneous Large Induced Steady State - Yes HNF-SD-WM-BIO-001, App E	No, Meacham, 1996, WHC-SD-WM-SARR-038, Rev 1.	Yes, PNNL Letter, from Huckaby to Meacham OT: 073096.	Unknown or currently undocumented	Yes, (Slurry) SAIC, 1996, WHC-SD-WM-HIE-007, Rev. 0	Yes, Kummerer, 1995, WHC-SD-WM-SARR-010, Rev 1.	No, SAIC, 1996, WHC-SD-WM-HIE-007, Rev. 0	No, Syphoning PHA, 1996, WHC-SD-WM-TI-759, Rev. 0	No, Bratzel 1996, WHC-SD-WM-TI-725	No, SAIC, 1996, WHC-SD-WM-HIE-007, Rev. 0
241-AN-105	Double shell tank	Facility Group 1 GRE - Yes Large Spontaneous Large Induced Steady State - Yes HNF-SD-WM-BIO-001, App E	No, Meacham, 1996, WHC-SD-WM-SARR-038, Rev 1.	Yes, PNNL Letter, from Huckaby to Meacham OT: 073096.	Unknown or currently undocumented	Yes, (Slurry) SAIC, 1996, WHC-SD-WM-HIE-007, Rev. 0	Yes, Kummerer, 1995, WHC-SD-WM-SARR-010, Rev 1.	No, SAIC, 1996, WHC-SD-WM-HIE-007, Rev. 0	No, Syphoning PHA, 1996, WHC-SD-WM-TI-759, Rev. 0	No, Bratzel 1996, WHC-SD-WM-TI-725	No, SAIC, 1996, WHC-SD-WM-HIE-007, Rev. 0
241-AN-106	Double shell tank	Facility Group 2 GRE - Yes Small Spontaneous Large Induced Steady State - Yes HNF-SD-WM-BIO-001, App E	No, Meacham, 1996, WHC-SD-WM-SARR-038, Rev 1.	Yes, PNNL Letter, from Huckaby to Meacham OT: 073096.	No, SAIC, 1996, WHC-SD-WM-HIE-007, Rev. 0	Unknown or currently undocumented	No (but potential for Tank Bump), Kummerer, 1995, WHC-SD-WM-SARR-010, Rev 1.	No, SAIC, 1996, WHC-SD-WM-HIE-007, Rev. 0	No, Syphoning PHA, 1996, WHC-SD-WM-TI-759, Rev. 0	No, Bratzel 1996, WHC-SD-WM-TI-725	No, SAIC, 1996, WHC-SD-WM-HIE-007, Rev. 0

Table D3.1-3. TWRS Tank Unique Phenomena. (43 Sheets)

Field Name	Type	Flammable Gas	Ferrocyanide	Organics Separable Phase	TOC in Liquids	TOC in Solids	High Heat	Pyrophorics	Syphoning	Criticality	Corrosivity
241-AN-107	Double shell tank	Facility Group 2 GRE - Yes Small Spontaneous Large Induced Steady State - Yes HNF-SD-WM-BIO-001, App E	No, Meacham, 1996, WHC-SD-WM-SARR-038, Rev 1.	Yes, PNNL Letter, from Huckaby to Meacham OT: 073096.	Yes, SAIC, 1996, WHC-SD-WM-HIE-007, Rev. 0	Yes, SAIC, 1996, WHC-SD-WM-HIE-007, Rev. 0	Yes, Kummerer, 1995, WHC-SD-WM-SARR-010, Rev 1.	No, SAIC, 1996, WHC-SD-WM-HIE-007, Rev. 0	No, Syphoning PHA, 1996, WHC-SD-WM-TI-759, Rev. 0	No, Bratzel 1996, WHC-SD-WM-TI-725	Yes, SAIC, 1996, WHC-SD-WM-HIE-007, Rev. 0
AP FARM											
241-AP-101	Double shell tank	Facility Group 2 GRE - Yes Small Spontaneous Large Induced Steady State - Yes HNF-SD-WM-BIO-001, App E	No, Meacham, 1996, WHC-SD-WM-SARR-038, Rev 1.	Yes, PNNL Letter, from Huckaby to Meacham OT: 073096.	No, SAIC, 1996, WHC-SD-WM-HIE-007, Rev. 0	Data not available	No (but potential for Tank Bump), Kummerer, 1995, WHC-SD-WM-SARR-010, Rev 1.	No, SAIC, 1996, WHC-SD-WM-HIE-007, Rev. 0	No, Syphoning PHA, 1996, WHC-SD-WM-TI-759, Rev. 0	No, Bratzel 1996, WHC-SD-WM-TI-725	No, SAIC, 1996, WHC-SD-WM-HIE-007, Rev. 0
241-AP-102	Double shell tank	Facility Group 2 GRE - Yes Small Spontaneous Large Induced Steady State - Yes HNF-SD-WM-BIO-001, App E	No, Meacham, 1996, WHC-SD-WM-SARR-038, Rev 1.	Yes, PNNL Letter, from Huckaby to Meacham OT: 073096.	No, SAIC, 1996, WHC-SD-WM-HIE-007, Rev. 0	Data not available	No (but potential for Tank Bump), Kummerer, 1995, WHC-SD-WM-SARR-010, Rev 1.	No, SAIC, 1996, WHC-SD-WM-HIE-007, Rev. 0	No, Syphoning PHA, 1996, WHC-SD-WM-TI-759, Rev. 0	No, Bratzel 1996, WHC-SD-WM-TI-725	No, SAIC, 1996, WHC-SD-WM-HIE-007, Rev. 0
241-AP-103	Double shell tank	Facility Group 2 GRE - Yes Small Spontaneous Large Induced Steady State - Yes HNF-SD-WM-BIO-001, App E	No, Meacham, 1996, WHC-SD-WM-SARR-038, Rev 1.	Yes, PNNL Letter, from Huckaby to Meacham OT: 073096.	No, SAIC, 1996, WHC-SD-WM-HIE-007, Rev. 0	Data not available	No (but potential for Tank Bump), Kummerer, 1995, WHC-SD-WM-SARR-010, Rev 1.	No, SAIC, 1996, WHC-SD-WM-HIE-007, Rev. 0	No, Syphoning PHA, 1996, WHC-SD-WM-TI-759, Rev. 0	No, Bratzel 1996, WHC-SD-WM-TI-725	No, SAIC, 1996, WHC-SD-WM-HIE-007, Rev. 0

Table D3.1-3. TWRS Tank Unique Phenomena. (43 Sheets)

Field Name	Type	Flammable Gas	Ferrocyanide	Organics Separable Phase	TOC in Liquids	TOC in Solids	High Heat	Pyrophorics	Syphoning	Criticality	Corrosivity
241-AP-104	Double shell tank	Facility Group 2 GRE - Yes Small Spontaneous Large Induced Steady State - Yes HNF-SD-WM-BIO-001, App E	No, Meacham, 1996, WHC-SD-WM-SARR-038, Rev 1.	Yes, PNNL Letter, from Huckaby to Meacham OT: 073096.	No, SAIC, 1996, WHC-SD-WM-HIE-007, Rev. 0	Data not available	No (but potential for Tank Bump), Kummerer, 1995, WHC-SD-WM-SARR-010, Rev 1.	No, SAIC, 1996, WHC-SD-WM-HIE-007, Rev. 0	No, Syphoning PHA, 1996, WHC-SD-WM-TI-759, Rev. 0	No, Bratzel 1996, WHC-SD-WM-TI-725	No, SAIC, 1996, WHC-SD-WM-HIE-007, Rev. 0
241-AP-105	Double shell tank	Facility Group 2 GRE - Yes Small Spontaneous Large Induced Steady State - Yes HNF-SD-WM-BIO-001, App E	No, Meacham, 1996, WHC-SD-WM-SARR-038, Rev 1.	Yes, PNNL Letter, from Huckaby to Meacham OT: 073096.	No, SAIC, 1996, WHC-SD-WM-HIE-007, Rev. 0	Unknown or currently undocumented	No (but potential for Tank Bump), Kummerer, 1995, WHC-SD-WM-SARR-010, Rev 1.	No, SAIC, 1996, WHC-SD-WM-HIE-007, Rev. 0	No, Syphoning PHA, 1996, WHC-SD-WM-TI-759, Rev. 0	No, Bratzel 1996, WHC-SD-WM-TI-725	No, SAIC, 1996, WHC-SD-WM-HIE-007, Rev. 0
241-AP-106	Double shell tank	Facility Group 2 GRE - Yes Small Spontaneous Large Induced Steady State - Yes HNF-SD-WM-BIO-001, App E	No, Meacham, 1996, WHC-SD-WM-SARR-038, Rev 1.	Yes, PNNL Letter, from Huckaby to Meacham OT: 073096.	No, SAIC, 1996, WHC-SD-WM-HIE-007, Rev. 0	Data not available	No (but potential for Tank Bump), Kummerer, 1995, WHC-SD-WM-SARR-010, Rev 1.	No, SAIC, 1996, WHC-SD-WM-HIE-007, Rev. 0	No, Syphoning PHA, 1996, WHC-SD-WM-TI-759, Rev. 0	No, Bratzel 1996, WHC-SD-WM-TI-725	No, SAIC, 1996, WHC-SD-WM-HIE-007, Rev. 0
241-AP-107	Double shell tank	Facility Group 2 GRE - Yes Small Spontaneous Large Induced Steady State - Yes HNF-SD-WM-BIO-001, App E	No, Meacham, 1996, WHC-SD-WM-SARR-038, Rev 1.	Yes, PNNL Letter, from Huckaby to Meacham OT: 073096.	No, SAIC, 1996, WHC-SD-WM-HIE-007, Rev. 0	Data not available	No (but potential for Tank Bump), Kummerer, 1995, WHC-SD-WM-SARR-010, Rev 1.	No, SAIC, 1996, WHC-SD-WM-HIE-007, Rev. 0	No, Syphoning PHA, 1996, WHC-SD-WM-TI-759, Rev. 0	No, Bratzel 1996, WHC-SD-WM-TI-725	No, SAIC, 1996, WHC-SD-WM-HIE-007, Rev. 0

Table D3.1-3. TWRS Tank Unique Phenomena. (43 Sheets)

Field Name	Type	Flammable Gas	Ferrocyanide	Organics Separable Phase	TOC in Liquids	TOC in Solids	High Heat	Pyrophorics	Syphoning	Criticality	Corrosivity
241-AP-108	Double shell tank	Facility Group 2 GRE - Yes Small Spontaneous Large Induced Steady State - Yes HNF-SD-WM-BIO-001, App E	No, Meacham, 1996, WHC-SD-WM-SARR-038, Rev 1.	Yes, PNNL Letter, from Huckaby to Meacham OT: 073096.	No, SAIC, 1996, WHC-SD-WM-HIE-007, Rev. 0	Data not available	No (but potential for Tank Bump), Kummerer, 1995, WHC-SD-WM-SARR-010, Rev 1.	No, SAIC, 1996, WHC-SD-WM-HIE-007, Rev. 0	No, Syphoning PHA, 1996, WHC-SD-WM-TI-759, Rev. 0	No, Bratzel 1996, WHC-SD-WM-TI-725	No, SAIC, 1996, WHC-SD-WM-HIE-007, Rev. 0
AW FARM											
241-AW-101	Double shell tank	Facility Group 1 GRE - Yes Large Spontaneous Large Induced Steady State - Yes HNF-SD-WM-BIO-001, App E	No, Meacham, 1996, WHC-SD-WM-SARR-038, Rev 1.	Yes, PNNL Letter, from Huckaby to Meacham OT: 073096.	No, SAIC, 1996, WHC-SD-WM-HIE-007, Rev. 0	Unknown or currently undocumented	Yes, Kummerer, 1995, WHC-SD-WM-SARR-010, Rev 1.	No, SAIC, 1996, WHC-SD-WM-HIE-007, Rev. 0	No, Syphoning PHA, 1996, WHC-SD-WM-TI-759, Rev. 0	No, Bratzel 1996, WHC-SD-WM-TI-725	No, SAIC, 1996, WHC-SD-WM-HIE-007, Rev. 0
241-AW-102	Double shell tank	Facility Group 2 GRE - Yes Small Spontaneous Large Induced Steady State - Yes HNF-SD-WM-BIO-001, App E	No, Meacham, 1996, WHC-SD-WM-SARR-038, Rev 1.	Yes, PNNL Letter, from Huckaby to Meacham OT: 073096.	No, SAIC, 1996, WHC-SD-WM-HIE-007, Rev. 0	Unknown or currently undocumented	No (but potential for Tank Bump), Kummerer, 1995, WHC-SD-WM-SARR-010, Rev 1.	No, SAIC, 1996, WHC-SD-WM-HIE-007, Rev. 0	No, Syphoning PHA, 1996, WHC-SD-WM-TI-759, Rev. 0	No, Bratzel 1996, WHC-SD-WM-TI-725	No, SAIC, 1996, WHC-SD-WM-HIE-007, Rev. 0
241-AW-103	Double shell tank	Facility Group 2 GRE - Yes Small Spontaneous Large Induced Steady State - Yes HNF-SD-WM-BIO-001, App E	No, Meacham, 1996, WHC-SD-WM-SARR-038, Rev 1.	Yes, PNNL Letter, from Huckaby to Meacham OT: 073096.	No, SAIC, 1996, WHC-SD-WM-HIE-007, Rev. 0	Unknown or currently undocumented	No (but potential for Tank Bump), Kummerer, 1995, WHC-SD-WM-SARR-010, Rev 1.	No, SAIC, 1996, WHC-SD-WM-HIE-007, Rev. 0	No, Syphoning PHA, 1996, WHC-SD-WM-TI-759, Rev. 0	No, Bratzel 1996, WHC-SD-WM-TI-725	No, SAIC, 1996, WHC-SD-WM-HIE-007, Rev. 0

Table D3.1-3. TWRS Tank Unique Phenomena. (43 Sheets)

Field Name	Type	Flammable Gas	Ferrocyanide	Organics Separable Phase	TOC in Liquids	TOC in Solids	High Heat	Pyrophorics	Syphoning	Criticality	Corrosivity
241-AW-104	Double shell tank	Facility Group 2 GRE - Yes Small Spontaneous Large Induced Steady State - Yes HNF-SD-WM-BIO-001, App E	No, Meacham, 1996, WHC-SD-WM-SARR-038, Rev 1.	Yes, PNNL Letter, from Huckaby to Meacham OT: 073096.	No, SAIC, 1996, WHC-SD-WM-HIE-007, Rev. 0	Unknown or currently undocumented	Yes, Kummerer, 1995, WHC-SD-WM-SARR-010, Rev 1.	No, SAIC, 1996, WHC-SD-WM-HIE-007, Rev. 0	No, Syphoning PHA, 1996, WHC-SD-WM-TI-759, Rev. 0	No, Bratzel 1996, WHC-SD-WM-TI-725	No, SAIC, 1996, WHC-SD-WM-HIE-007, Rev. 0
241-AW-105	Double shell tank	Facility Group 2 GRE - Yes Small Spontaneous Large Induced Steady State - Yes HNF-SD-WM-BIO-001, App E	No, Meacham, 1996, WHC-SD-WM-SARR-038, Rev 1.	Yes, PNNL Letter, from Huckaby to Meacham OT: 073096.	Data not available	No, SAIC, 1996, WHC-SD-WM-HIE-007, Rev. 0	No (but potential for Tank Bump), Kummerer, 1995, WHC-SD-WM-SARR-010, Rev 1.	No, SAIC, 1996, WHC-SD-WM-HIE-007, Rev. 0	No, Syphoning PHA, 1996, WHC-SD-WM-TI-759, Rev. 0	No, Bratzel 1996, WHC-SD-WM-TI-725	No, SAIC, 1996, WHC-SD-WM-HIE-007, Rev. 0
241-AW-106	Double shell tank	Facility Group 2 GRE - Yes Small Spontaneous Large Induced Steady State - Yes HNF-SD-WM-BIO-001, App E	No, Meacham, 1996, WHC-SD-WM-SARR-038, Rev 1.	Yes, PNNL Letter, from Huckaby to Meacham OT: 073096.	No, SAIC, 1996, WHC-SD-WM-HIE-007, Rev. 0	Unknown or currently undocumented	No (but potential for Tank Bump), Kummerer, 1995, WHC-SD-WM-SARR-010, Rev 1.	No, SAIC, 1996, WHC-SD-WM-HIE-007, Rev. 0	No, Syphoning PHA, 1996, WHC-SD-WM-TI-759, Rev. 0	No, Bratzel 1996, WHC-SD-WM-TI-725	No, SAIC, 1996, WHC-SD-WM-HIE-007, Rev. 0
AX FARM											
241-AX-101	Single shell tank	Facility Group 3 GRE - Yes Small Induced Steady State - Yes HNF-SD-WM-BIO-001, App E	No, Meacham, 1996, WHC-SD-WM-SARR-038, Rev 1.	No, PNNL Letter, from Huckaby to Meacham OT: 073096.	Unknown or currently undocumented	Unknown or currently undocumented	No (but potential for Tank Bump), Kummerer, 1995, WHC-SD-WM-SARR-010, Rev 1.	No, SAIC, 1996, WHC-SD-WM-HIE-007, Rev. 0	No, Syphoning PHA, 1996, WHC-SD-WM-TI-759, Rev. 0	No, Bratzel 1996, WHC-SD-WM-TI-725	No, Anantatmula 1994 WHC-EP-0772

Table D3.1-3. TWRS Tank Unique Phenomena. (43 Sheets)

Field Name	Type	Flammable Gas	Ferrocyanide	Organics Separable Phase	TOC in Liquids	TOC in Solids	High Heat	Pyrophorics	Syphoning	Criticality	Corrosivity
241-AX-102	Single shell tank	Facility Group 3 GRE - Yes Small Induced Steady State - Yes HNF-SD-WM-BIO-001, App E	No, Meacham, 1996, WHC-SD-WM-SARR-038, Rev 1.	No, PNNL Letter, from Huckaby to Meacham OT: 073096.	Unknown or currently undocumented	Yes, Webb, 1996, WHC-SD-WM-SARR-033, Rev 1	No (but potential for Tank Bump), Kummerer, 1995, WHC-SD-WM-SARR-010, Rev 1.	No, SAIC, 1996, WHC-SD-WM-HIE-007, Rev. 0	No, Syphoning PHA, 1996, WHC-SD-WM-TI-759, Rev. 0	No, Bratzel 1996, WHC-SD-WM-TI-725	No, Anantatmula 1994 WHC-EP-0772
241-AX-103	Single shell tank	Facility Group 3 GRE - Yes Small Induced Steady State - Yes HNF-SD-WM-BIO-001, App E	No, Meacham, 1996, WHC-SD-WM-SARR-038, Rev 1.	No, PNNL Letter, from Huckaby to Meacham OT: 073096.	Unknown or currently undocumented	Unknown or currently undocumented	No (but potential for Tank Bump), Kummerer, 1995, WHC-SD-WM-SARR-010, Rev 1.	No, SAIC, 1996, WHC-SD-WM-HIE-007, Rev. 0	No, Syphoning PHA, 1996, WHC-SD-WM-TI-759, Rev. 0	No, Bratzel 1996, WHC-SD-WM-TI-725	No, Anantatmula 1994 WHC-EP-0772
241-AX-104	Single shell tank	Facility Group 3 GRE - Yes Small Induced Steady State - Yes HNF-SD-WM-BIO-001, App E	No, Meacham, 1996, WHC-SD-WM-SARR-038, Rev 1.	Yes, PNNL Letter, from Huckaby to Meacham OT: 073096.	Unknown or currently undocumented	Unknown or currently undocumented	No (but potential for Tank Bump), Kummerer, 1995, WHC-SD-WM-SARR-010, Rev 1.	No, SAIC, 1996, WHC-SD-WM-HIE-007, Rev. 0	No, Syphoning PHA, 1996, WHC-SD-WM-TI-759, Rev. 0	No, Bratzel 1996, WHC-SD-WM-TI-725	No, Anantatmula 1994 WHC-EP-0772
AY FARM											
241-AY-101	Double shell tank	Facility Group 2 GRE - Yes Small Spontaneous Large Induced Steady State - Yes HNF-SD-WM-BIO-001, App E	No, Meacham, 1996, WHC-SD-WM-SARR-038, Rev 1.	Yes, PNNL Letter, from Huckaby to Meacham OT: 073096.	No, SAIC, 1996, WHC-SD-WM-HIE-007, Rev. 0	No, SAIC, 1996, WHC-SD-WM-HIE-007, Rev. 0	Yes, Brevick, 1995, WHC-SD-WM-ER-350, Rev. 0	No, SAIC, 1996, WHC-SD-WM-HIE-007, Rev. 0	No, Syphoning PHA, 1996, WHC-SD-WM-TI-759, Rev. 0	No, Bratzel 1996, WHC-SD-WM-TI-725	Yes, SAIC, 1996, WHC-SD-WM-HIE-007, Rev. 0
241-AY-102	Double shell tank	Facility Group 2 GRE - Yes Small Spontaneous Large Induced Steady State - Yes HNF-SD-WM-BIO-001, App E	No, Meacham, 1996, WHC-SD-WM-SARR-038, Rev 1.	Yes, PNNL Letter, from Huckaby to Meacham OT: 073096.	No, SAIC, 1996, WHC-SD-WM-HIE-007, Rev. 0	No, SAIC, 1996, WHC-SD-WM-HIE-007, Rev. 0	Yes, Brevick, 1995, WHC-SD-WM-ER-350, Rev. 0	No, SAIC, 1996, WHC-SD-WM-HIE-007, Rev. 0	No, Syphoning PHA, 1996, WHC-SD-WM-TI-759, Rev. 0	No, Bratzel 1996, WHC-SD-WM-TI-725	No, SAIC, 1996, WHC-SD-WM-HIE-007, Rev. 0

Table D3.1-3. TWRS Tank Unique Phenomena. (43 Sheets)

Field Name	Type	Flammable Gas	Ferrocyanide	Organics Separable Phase	TOC in Liquids	TOC in Solids	High Heat	Pyrophorics	Syphoning	Criticality	Corrosivity
AZ FARM											
241-AZ-101	Double shell tank	Facility Group 2 GRE - Yes Small Spontaneous Large Induced Steady State - Yes HNF-SD-WM-BIO-001, App E	No, Meacham, 1996, WHC-SD-WM-SARR-038, Rev 1.	Yes, PNNL Letter, from Huckaby to Meacham OT: 073096.	No, SAIC, 1996, WHC-SD-WM-HIE-007, Rev. 0	Unknown or currently undocumented	Yes, Brevick, 1995, WHC-SD-WM-ER-350, Rev. 0	No, SAIC, 1996, WHC-SD-WM-HIE-007, Rev. 0	No, Syphoning PHA, 1996, WHC-SD-WM-TI-759, Rev. 0	No, Bratzel 1996, WHC-SD-WM-TI-725	No, SAIC, 1996, WHC-SD-WM-HIE-007, Rev. 0
241-AZ-102	Double shell tank	Facility Group 2 GRE - Yes Small Spontaneous Large Induced Steady State - Yes HNF-SD-WM-BIO-001, App E	No, Meacham, 1996, WHC-SD-WM-SARR-038, Rev 1.	Yes, PNNL Letter, from Huckaby to Meacham OT: 073096.	No, SAIC, 1996, WHC-SD-WM-HIE-007, Rev. 0	Unknown or currently undocumented	Yes, Brevick, 1995, WHC-SD-WM-ER-350, Rev. 0	No, SAIC, 1996, WHC-SD-WM-HIE-007, Rev. 0	No, Syphoning PHA, 1996, WHC-SD-WM-TI-759, Rev. 0	No, Bratzel 1996, WHC-SD-WM-TI-725	No, SAIC, 1996, WHC-SD-WM-HIE-007, Rev. 0
B FARM											
241-B-101	Single shell tank	Facility Group 3 GRE - Yes Small Induced Steady State - Yes HNF-SD-WM-BIO-001, App E	No, Meacham, 1996, WHC-SD-WM-SARR-038, Rev 1.	Yes, PNNL Letter, from Huckaby to Meacham OT: 073096.	No, Schreiber, 1995, WHC-SD-WM-DP-139 Rev. 0	Unknown or currently undocumented	No, Kummerer, 1995, WHC-SD-WM-SARR-010, Rev 1.	No, SAIC, 1996, WHC-SD-WM-HIE-007, Rev. 0	No, Syphoning PHA, 1996, WHC-SD-WM-TI-759, Rev. 0	No, Bratzel 1996, WHC-SD-WM-TI-725	No, Anantatmula 1994 WHC-EP-0772
241-B-102	Single shell tank	Facility Group 3 GRE - Yes Small Induced Steady State - Yes HNF-SD-WM-BIO-001, App E	No, Meacham, 1996, WHC-SD-WM-SARR-038, Rev 1.	Yes, PNNL Letter, from Huckaby to Meacham OT: 073096.	No, Winters, 1995, WHC-SD-WM-ER-405	Unknown or currently undocumented	No, Kummerer, 1995, WHC-SD-WM-SARR-010, Rev 1.	No, SAIC, 1996, WHC-SD-WM-HIE-007, Rev. 0	No, Syphoning PHA, 1996, WHC-SD-WM-TI-759, Rev. 0	No, Bratzel 1996, WHC-SD-WM-TI-725	No, Anantatmula 1994 WHC-EP-0772

Table D3.1-3. TWRS Tank Unique Phenomena. (43 Sheets)

Field Name	Type	Flammable Gas	Ferrocyanide	Organics Separable Phase	TOC in Liquids	TOC in Solids	High Heat	Pyrophorics	Syphoning	Criticality	Corrosivity
241-B-103	Single shell tank	Facility Group 3 GRE - Yes Small Induced Steady State - Yes HNF-SD-WM-BIO-001, App E	No, Meacham, 1996, WHC-SD-WM-SARR-038, Rev 1.	No, PNNL Letter, from Huckaby to Meacham OT: 073096.	N/A	No, Webb, 1996, WHC-SD-WM-SARR-033, Rev 1	No, Kummerer, 1995, WHC-SD-WM-SARR-010, Rev 1.	No, SAIC, 1996, WHC-SD-WM-HIE-007, Rev. 0	No, Syphoning PHA, 1996, WHC-SD-WM-TI-759, Rev. 0	No, Bratzel 1996, WHC-SD-WM-TI-725	No, Anantatmula 1994 WHC-EP-0772
241-B-104	Single shell tank	Facility Group 3 GRE - Yes Small Induced Steady State - Yes HNF-SD-WM-BIO-001, App E	No, Meacham, 1996, WHC-SD-WM-SARR-038, Rev 1.	Yes, PNNL Letter, from Huckaby to Meacham OT: 073096.	No, Jo, 1995 WHC-SD-WM-DP-137	No, Webb, 1996, WHC-SD-WM-SARR-033, Rev 1	No, Kummerer, 1995, WHC-SD-WM-SARR-010, Rev 1.	No, SAIC, 1996, WHC-SD-WM-HIE-007, Rev. 0	No, Syphoning PHA, 1996, WHC-SD-WM-TI-759, Rev. 0	No, Bratzel 1996, WHC-SD-WM-TI-725	No, Anantatmula 1994 WHC-EP-0772
241-B-105	Single shell tank	Facility Group 3 GRE - Yes Small Induced Steady State - Yes HNF-SD-WM-BIO-001, App E	No, Meacham, 1996, WHC-SD-WM-SARR-038, Rev 1.	Yes, PNNL Letter, from Huckaby to Meacham OT: 073096.	Unknown or currently undocumented	Unknown or currently undocumented	No, Kummerer, 1995, WHC-SD-WM-SARR-010, Rev 1.	No, SAIC, 1996, WHC-SD-WM-HIE-007, Rev. 0	No, Syphoning PHA, 1996, WHC-SD-WM-TI-759, Rev. 0	No, Bratzel 1996, WHC-SD-WM-TI-725	No, Anantatmula 1994 WHC-EP-0772
241-B-106	Single shell tank	Facility Group 3 GRE - Yes Small Induced Steady State - Yes HNF-SD-WM-BIO-001, App E	No, Meacham, 1996, WHC-SD-WM-SARR-038, Rev 1.	Yes, PNNL Letter, from Huckaby to Meacham OT: 073096.	No, Conner, 1995, WHC-SD-WM-DP-140	No, Webb, 1996, WHC-SD-WM-SARR-033, Rev 1	No, Kummerer, 1995, WHC-SD-WM-SARR-010, Rev 1.	No, SAIC, 1996, WHC-SD-WM-HIE-007, Rev. 0	No, Syphoning PHA, 1996, WHC-SD-WM-TI-759, Rev. 0	No, Bratzel 1996, WHC-SD-WM-TI-725	No, Anantatmula 1994 WHC-EP-0772
241-B-107	Single shell tank	Facility Group 3 GRE - Yes Small Induced Steady State - Yes HNF-SD-WM-BIO-001, App E	No, Meacham, 1996, WHC-SD-WM-SARR-038, Rev 1.	Yes, PNNL Letter, from Huckaby to Meacham OT: 073096.	Unknown or currently undocumented	Unknown or currently undocumented	No, Kummerer, 1995, WHC-SD-WM-SARR-010, Rev 1.	No, SAIC, 1996, WHC-SD-WM-HIE-007, Rev. 0	No, Syphoning PHA, 1996, WHC-SD-WM-TI-759, Rev. 0	No, Bratzel 1996, WHC-SD-WM-TI-725	No, Anantatmula 1994 WHC-EP-0772

Table D3.1-3. TWRS Tank Unique Phenomena. (43 Sheets)

Field Name	Type	Flammable Gas	Ferrocyanide	Organics Separable Phase	TOC in Liquids	TOC in Solids	High Heat	Pyrophorics	Syphoning	Criticality	Corrosivity
241-B-108	Single shell tank	Facility Group 3 GRE - Yes Small Induced Steady State - Yes HNF-SD-WM-BIO-001, App E	No, Meacham, 1996, WHC-SD-WM-SARR-038, Rev 1.	Yes, PNNL Letter, from Huckaby to Meacham OT: 073096.	Unknown or currently undocumented	Unknown or currently undocumented	No, Kummerer, 1995, WHC-SD-WM-SARR-010, Rev 1.	No, SAIC, 1996, WHC-SD-WM-HIE-007, Rev. 0	No, Syphoning PHA, 1996, WHC-SD-WM-TI-759, Rev. 0	No, Bratzel 1996, WHC-SD-WM-TI-725	No, Anantatmula 1994 WHC-EP-0772
241-B-109	Single shell tank	Facility Group 3 GRE - Yes Small Induced Steady State - Yes HNF-SD-WM-BIO-001, App E	No, Meacham, 1996, WHC-SD-WM-SARR-038, Rev 1.	Yes, PNNL Letter, from Huckaby to Meacham OT: 073096.	Unknown or currently undocumented	Unknown or currently undocumented	No, Kummerer, 1995, WHC-SD-WM-SARR-010, Rev 1.	No, SAIC, 1996, WHC-SD-WM-HIE-007, Rev. 0	No, Syphoning PHA, 1996, WHC-SD-WM-TI-759, Rev. 0	No, Bratzel 1996, WHC-SD-WM-TI-725	No, Anantatmula 1994 WHC-EP-0772
241-B-110	Single shell tank	Facility Group 3 GRE - Yes Small Induced Steady State - Yes HNF-SD-WM-BIO-001, App E	No, Meacham, 1996, WHC-SD-WM-SARR-038, Rev 1.	Yes, PNNL Letter, from Huckaby to Meacham OT: 073096.	Data not available	No, Webb, 1996, WHC-SD-WM-SARR-033, Rev 1	No, Kummerer, 1995, WHC-SD-WM-SARR-010, Rev 1.	No, SAIC, 1996, WHC-SD-WM-HIE-007, Rev. 0	No, Syphoning PHA, 1996, WHC-SD-WM-TI-759, Rev. 0	No, Bratzel 1996, WHC-SD-WM-TI-725	No, Anantatmula 1994 WHC-EP-0772
241-B-111	Single shell tank	Facility Group 3 GRE - Yes Small Induced Steady State - Yes HNF-SD-WM-BIO-001, App E	No, Meacham, 1996, WHC-SD-WM-SARR-038, Rev 1.	Yes, PNNL Letter, from Huckaby to Meacham OT: 073096.	No, Remund et. al PNL-10099	No, Webb, 1996, WHC-SD-WM-SARR-033, Rev 1	No, Kummerer, 1995, WHC-SD-WM-SARR-010, Rev 1.	No, SAIC, 1996, WHC-SD-WM-HIE-007, Rev. 0	No, Syphoning PHA, 1996, WHC-SD-WM-TI-759, Rev. 0	No, Bratzel 1996, WHC-SD-WM-TI-725	No, Anantatmula 1994 WHC-EP-0772
241-B-112	Single shell tank	Facility Group 3 GRE - Yes Small Induced Steady State - Yes HNF-SD-WM-BIO-001, App E	No, Meacham, 1996, WHC-SD-WM-SARR-038, Rev 1.	Yes, PNNL Letter, from Huckaby to Meacham OT: 073096.	No, Dougherty 1995 WHC-SD-WM-ER-366	Unknown or currently undocumented	No, Kummerer, 1995, WHC-SD-WM-SARR-010, Rev 1.	No, SAIC, 1996, WHC-SD-WM-HIE-007, Rev. 0	No, Syphoning PHA, 1996, WHC-SD-WM-TI-759, Rev. 0	No, Bratzel 1996, WHC-SD-WM-TI-725	No, Anantatmula 1994 WHC-EP-0772

Table D3.1-3. TWRS Tank Unique Phenomena. (43 Sheets)

Field Name	Type	Flammable Gas	Ferrocyanide	Organics Separable Phase	TOC in Liquids	TOC in Solids	High Heat	Pyrophorics	Syphoning	Criticality	Corrosivity
241-B-201	Single shell tank	Facility Group 2 GRE - Yes Small Spontaneous Large Induced Steady State - Yes HNF-SD-WM-BIO-001, App E	No, Meacham, 1996, WHC-SD-WM-SARR-038, Rev 1.	Yes, PNNL Letter, from Huckaby to Meacham OT: 073096.	Unknown or currently undocumented	No, Webb, 1996, WHC-SD-WM-SARR-033, Rev 1	No, Kummerer, 1995, WHC-SD-WM-SARR-010, Rev 1.	No, SAIC, 1996, WHC-SD-WM-HIE-007, Rev. 0	No, Syphoning PHA, 1996, WHC-SD-WM-TI-759, Rev. 0	No, Bratzel 1996, WHC-SD-WM-TI-725	No, Anantatmula 1994 WHC-EP-0772
241-B-202	Single shell tank	Facility Group 2 GRE - Yes Small Spontaneous Large Induced Steady State - Yes HNF-SD-WM-BIO-001, App E	No, Meacham, 1996, WHC-SD-WM-SARR-038, Rev 1.	Yes, PNNL Letter, from Huckaby to Meacham OT: 073096.	Data not available	Unknown or currently undocumented	No, Kummerer, 1995, WHC-SD-WM-SARR-010, Rev 1.	No, SAIC, 1996, WHC-SD-WM-HIE-007, Rev. 0	No, Syphoning PHA, 1996, WHC-SD-WM-TI-759, Rev. 0	No, Bratzel 1996, WHC-SD-WM-TI-725	No, Anantatmula 1994 WHC-EP-0772
241-B-203	Single shell tank	Facility Group 3 GRE - Yes Small Induced Steady State - Yes HNF-SD-WM-BIO-001, App E	No, Meacham, 1996, WHC-SD-WM-SARR-038, Rev 1.	Yes, PNNL Letter, from Huckaby to Meacham OT: 073096.	No, Jo, 1996 WHC-SD-WM-DP-169 Rev.0	Unknown or currently undocumented	No, Kummerer, 1995, WHC-SD-WM-SARR-010, Rev 1.	No, SAIC, 1996, WHC-SD-WM-HIE-007, Rev. 0	No, Syphoning PHA, 1996, WHC-SD-WM-TI-759, Rev. 0	No, Bratzel 1996, WHC-SD-WM-TI-725	No, Anantatmula 1994 WHC-EP-0772
241-B-204	Single shell tank	Facility Group 3 GRE - Yes Small Induced Steady State - Yes HNF-SD-WM-BIO-001, App E	No, Meacham, 1996, WHC-SD-WM-SARR-038, Rev 1.	Yes, PNNL Letter, from Huckaby to Meacham OT: 073096.	No, Sasaki 1995, WHC-SD-WM-DP-160	No, Webb, 1996, WHC-SD-WM-SARR-033, Rev 1	No, Kummerer, 1995, WHC-SD-WM-SARR-010, Rev 1.	No, SAIC, 1996, WHC-SD-WM-HIE-007, Rev. 0	No, Syphoning PHA, 1996, WHC-SD-WM-TI-759, Rev. 0	No, Bratzel 1996, WHC-SD-WM-TI-725	No, Anantatmula 1994 WHC-EP-0772

Table D3.1-3. TWRS Tank Unique Phenomena. (43 Sheets)

Field Name	Type	Flammable Gas	Ferrocyanide	Organics Separable Phase	TOC in Liquids	TOC in Solids	High Heat	Pyrophorics	Syphoning	Criticality	Corrosivity
BX FARM											
241-BX-101	Single shell tank	Facility Group 3 GRE - Yes Small Induced Steady State - Yes HNF-SD-WM-BIO-001, App E	No, Meacham, 1996, WHC-SD-WM-SARR-038, Rev 1.	Yes, PNNL Letter, from Huckaby to Meacham OT: 073096.	No, Schreiber 1995, WHC-SD-WM-ER-408	No, Webb, 1996, WHC-SD-WM-SARR-033, Rev 1	No, Kummerer, 1995, WHC-SD-WM-SARR-010, Rev 1.	No, SAIC, 1996, WHC-SD-WM-HIE-007, Rev. 0	No, Syphoning PHA, 1996, WHC-SD-WM-TI-759, Rev. 0	No, Bratzel 1996, WHC-SD-WM-TI-725	No, Anantatmula 1994 WHC-EP-0772
241-BX-102	Single shell tank	Facility Group 3 GRE - Yes Small Induced Steady State - Yes HNF-SD-WM-BIO-001, App E	No, Meacham, 1996, WHC-SD-WM-SARR-038, Rev 1.	Yes, PNNL Letter, from Huckaby to Meacham OT: 073096.	Unknown or currently undocumented	Unknown or currently undocumented	No, Kummerer, 1995, WHC-SD-WM-SARR-010, Rev 1.	No, SAIC, 1996, WHC-SD-WM-HIE-007, Rev. 0	No, Syphoning PHA, 1996, WHC-SD-WM-TI-759, Rev. 0	No, Bratzel 1996, WHC-SD-WM-TI-725	No, Anantatmula 1994 WHC-EP-0772
241-BX-103	Single shell tank	Facility Group 3 GRE - Yes Small Induced Steady State - Yes HNF-SD-WM-BIO-001, App E	No, Meacham, 1996, WHC-SD-WM-SARR-038, Rev 1.	Yes, PNNL Letter, from Huckaby to Meacham OT: 073096.	No, Bell 1995 WHC-SD-WM-DP-135	Unknown or currently undocumented	No, Kummerer, 1995, WHC-SD-WM-SARR-010, Rev 1.	No, SAIC, 1996, WHC-SD-WM-HIE-007, Rev. 0	No, Syphoning PHA, 1996, WHC-SD-WM-TI-759, Rev. 0	No, Bratzel 1996, WHC-SD-WM-TI-725	No, Anantatmula 1994 WHC-EP-0772
241-BX-104	Single shell tank	Facility Group 3 GRE - Yes Small Induced Steady State - Yes HNF-SD-WM-BIO-001, App E	No, Meacham, 1996, WHC-SD-WM-SARR-038, Rev 1.	Yes, PNNL Letter, from Huckaby to Meacham OT: 073096.	No, Hu 1996 WHC-SD-WM-DP-171	No, Webb, 1996, WHC-SD-WM-SARR-033, Rev 1	No, Kummerer, 1995, WHC-SD-WM-SARR-010, Rev 1.	No, SAIC, 1996, WHC-SD-WM-HIE-007, Rev. 0	No, Syphoning PHA, 1996, WHC-SD-WM-TI-759, Rev. 0	No, Bratzel 1996, WHC-SD-WM-TI-725	No, Anantatmula 1994 WHC-EP-0772
241-BX-105	Single shell tank	Facility Group 3 GRE - Yes Small Induced Steady State - Yes HNF-SD-WM-BIO-001, App E	No, Meacham, 1996, WHC-SD-WM-SARR-038, Rev 1.	Yes, PNNL Letter, from Huckaby to Meacham OT: 073096.	No, Hall 1995 WHC-SD-WM-ER-406	No, Webb, 1996, WHC-SD-WM-SARR-033, Rev 1	No, Kummerer, 1995, WHC-SD-WM-SARR-010, Rev 1.	No, SAIC, 1996, WHC-SD-WM-HIE-007, Rev. 0	No, Syphoning PHA, 1996, WHC-SD-WM-TI-759, Rev. 0	No, Bratzel 1996, WHC-SD-WM-TI-725	No, Anantatmula 1994 WHC-EP-0772

Table D3.1-3. TWRS Tank Unique Phenomena. (43 Sheets)

Field Name	Type	Flammable Gas	Ferrocyanide	Organics Separable Phase	TOC in Liquids	TOC in Solids	High Heat	Pyrophorics	Syphoning	Criticality	Corrosivity
241-BX-106	Single shell tank	Facility Group 3 GRE - Yes Small Induced Steady State - Yes HNF-SD-WM-BIO-001, App E	No, Meacham, 1996, WHC-SD-WM-SARR-038, Rev 1.	Yes, PNNL Letter, from Huckaby to Meacham OT: 073096.	No, Rollison 1995 8E480-95-018 R. 1	No, Webb, 1996, WHC-SD-WM-SARR-033, Rev 1	No, Kummerer, 1995, WHC-SD-WM-SARR-010, Rev 1.	No, SAIC, 1996, WHC-SD-WM-HIE-007, Rev. 0	No, Syphoning PHA, 1996, WHC-SD-WM-TI-759, Rev. 0	No, Bratzel 1996, WHC-SD-WM-TI-725	Yes, Anantatmula 1994 WHC-EP-0772
241-BX-107	Single shell tank	Facility Group 2 GRE - Yes Small Spontaneous Large Induced Steady State - Yes HNF-SD-WM-BIO-001, App E	No, Meacham, 1996, WHC-SD-WM-SARR-038, Rev 1.	No, PNNL Letter, from Huckaby to Meacham OT: 073096.	No, Raphael 1994 WHC-EP-0739	No, Webb, 1996, WHC-SD-WM-SARR-033, Rev 1	No, Kummerer, 1995, WHC-SD-WM-SARR-010, Rev 1.	No, SAIC, 1996, WHC-SD-WM-HIE-007, Rev. 0	No, Syphoning PHA, 1996, WHC-SD-WM-TI-759, Rev. 0	No, Bratzel 1996, WHC-SD-WM-TI-725	No, Anantatmula 1994 WHC-EP-0772
241-BX-108	Single shell tank	Facility Group 3 GRE - Yes Small Induced Steady State - Yes HNF-SD-WM-BIO-001, App E	No, Meacham, 1996, WHC-SD-WM-SARR-038, Rev 1.	Yes, PNNL Letter, from Huckaby to Meacham OT: 073096.	N/A	No, Webb, 1996, WHC-SD-WM-SARR-033, Rev 1	No, Kummerer, 1995, WHC-SD-WM-SARR-010, Rev 1.	No, SAIC, 1996, WHC-SD-WM-HIE-007, Rev. 0	No, Syphoning PHA, 1996, WHC-SD-WM-TI-759, Rev. 0	No, Bratzel 1996, WHC-SD-WM-TI-725	No, Anantatmula 1994 WHC-EP-0772
241-BX-109	Single shell tank	Facility Group 3 GRE - Yes Small Induced Steady State - Yes HNF-SD-WM-BIO-001, App E	No, Meacham, 1996, WHC-SD-WM-SARR-038, Rev 1.	Yes, PNNL Letter, from Huckaby to Meacham OT: 073096.	Unknown or currently undocumented	No, Webb, 1996, WHC-SD-WM-SARR-033, Rev 1	No, Kummerer, 1995, WHC-SD-WM-SARR-010, Rev 1.	No, SAIC, 1996, WHC-SD-WM-HIE-007, Rev. 0	No, Syphoning PHA, 1996, WHC-SD-WM-TI-759, Rev. 0	No, Bratzel 1996, WHC-SD-WM-TI-725	No, Anantatmula 1994 WHC-EP-0772
241-BX-110	Single shell tank	Facility Group 3 GRE - Yes Small Induced Steady State - Yes HNF-SD-WM-BIO-001, App E	No, Meacham, 1996, WHC-SD-WM-SARR-038, Rev 1.	Yes, PNNL Letter, from Huckaby to Meacham OT: 073096.	No, Sutey 1993 7C242-93-029	No, Webb, 1996, WHC-SD-WM-SARR-033, Rev 1	No, Kummerer, 1995, WHC-SD-WM-SARR-010, Rev 1.	No, SAIC, 1996, WHC-SD-WM-HIE-007, Rev. 0	No, Syphoning PHA, 1996, WHC-SD-WM-TI-759, Rev. 0	No, Bratzel 1996, WHC-SD-WM-TI-725	No, Anantatmula 1994 WHC-EP-0772

Table D3.1-3. TWRS Tank Unique Phenomena. (43 Sheets)

Field Name	Type	Flammable Gas	Ferrocyanide	Organics Separable Phase	TOC in Liquids	TOC in Solids	High Heat	Pyrophorics	Syphoning	Criticality	Corrosivity
241-BX-111	Single shell tank	Facility Group 3 GRE - Yes Small Induced Steady State - Yes HNF-SD-WM-BIO-001, App E	No, Meacham, 1996, WHC-SD-WM-SARR-038, Rev 1.	Yes, PNNL Letter, from Huckaby to Meacham OT: 073096.	No, Sutey 1993 7C242-93-029	No, Webb, 1996, WHC-SD-WM-SARR-033, Rev 1	No, Kummerer, 1995, WHC-SD-WM-SARR-010, Rev 1.	No, SAIC, 1996, WHC-SD-WM-HIE-007, Rev. 0	No, Syphoning PHA, 1996, WHC-SD-WM-TI-759, Rev. 0	No, Bratzel 1996, WHC-SD-WM-TI-725	No, Anantatmula 1994 WHC-EP-0772
241-BX-112	Single shell tank	Facility Group 3 GRE - Yes Small Induced Steady State - Yes HNF-SD-WM-BIO-001, App E	No, Meacham, 1996, WHC-SD-WM-SARR-038, Rev 1.	Yes, PNNL Letter, from Huckaby to Meacham OT: 073096.	Unknown or currently undocumented	No, Webb, 1996, WHC-SD-WM-SARR-033, Rev 1	No, Kummerer, 1995, WHC-SD-WM-SARR-010, Rev 1.	No, SAIC, 1996, WHC-SD-WM-HIE-007, Rev. 0	No, Syphoning PHA, 1996, WHC-SD-WM-TI-759, Rev. 0	No, Bratzel 1996, WHC-SD-WM-TI-725	No, Anantatmula 1994 WHC-EP-0772
BY FARM											
241-BY-101	Single shell tank	Facility Group 2 GRE - Yes Small Spontaneous Large Induced Steady State - Yes HNF-SD-WM-BIO-001, App E	No, Meacham, 1996, WHC-SD-WM-SARR-038, Rev 1.	Yes, PNNL Letter, from Huckaby to Meacham OT: 073096.	Unknown or currently undocumented	Unknown or currently undocumented	No, Kummerer, 1995, WHC-SD-WM-SARR-010, Rev 1.	No, SAIC, 1996, WHC-SD-WM-HIE-007, Rev. 0	No, Syphoning PHA, 1996, WHC-SD-WM-TI-759, Rev. 0	No, Bratzel 1996, WHC-SD-WM-TI-725	No, Anantatmula 1994 WHC-EP-0772
241-BY-102	Single shell tank	Facility Group 2 GRE - Yes Small Spontaneous Large Induced Steady State - Yes HNF-SD-WM-BIO-001, App E	No, Meacham, 1996, WHC-SD-WM-SARR-038, Rev 1.	No, PNNL Letter, from Huckaby to Meacham OT: 073096.	No, Edrington 1991 28110-PCL91-048	Unknown or currently undocumented	No, Kummerer, 1995, WHC-SD-WM-SARR-010, Rev 1.	No, SAIC, 1996, WHC-SD-WM-HIE-007, Rev. 0	No, Syphoning PHA, 1996, WHC-SD-WM-TI-759, Rev. 0	No, Bratzel 1996, WHC-SD-WM-TI-725	No, Anantatmula 1994 WHC-EP-0772
241-BY-103	Single shell tank	Facility Group 3 GRE - Yes Small Induced Steady State - Yes HNF-SD-WM-BIO-001, App E	No, Meacham, 1996, WHC-SD-WM-SARR-038, Rev 1.	No, PNNL Letter, from Huckaby to Meacham OT: 073096.	No, Kelly 1995 WHC-SD-WM-DP-104 R. 1	Unknown or currently undocumented	No, Kummerer, 1995, WHC-SD-WM-SARR-010, Rev 1.	No, SAIC, 1996, WHC-SD-WM-HIE-007, Rev. 0	No, Syphoning PHA, 1996, WHC-SD-WM-TI-759, Rev. 0	No, Bratzel 1996, WHC-SD-WM-TI-725	No, Anantatmula 1994 WHC-EP-0772

Table D3.1-3. TWRS Tank Unique Phenomena. (43 Sheets)

Field Name	Type	Flammable Gas	Ferrocyanide	Organics Separable Phase	TOC in Liquids	TOC in Solids	High Heat	Pyrophorics	Syphoning	Criticality	Corrosivity
241-BY-104	Single shell tank	Facility Group 3 GRE - Yes Small Induced Steady State - Yes HNF-SD-WM-BIO-001, App E	No, Meacham, 1996, WHC-SD-WM-SARR-038, Rev 1.	No, PNNL Letter, from Huckaby to Meacham OT: 073096.	Unknown or currently undocumented	Unknown or currently undocumented	No, Kummerer, 1995, WHC-SD-WM-SARR-010, Rev 1.	No, SAIC, 1996, WHC-SD-WM-HIE-007, Rev. 0	No, Syphoning PHA, 1996, WHC-SD-WM-TI-759, Rev. 0	No, Bratzel 1996, WHC-SD-WM-TI-725	No, Anantatmula 1994 WHC-EP-0772
241-BY-105	Single shell tank	Facility Group 2 GRE - Yes Small Spontaneous Large Induced Steady State - Yes HNF-SD-WM-BIO-001, App E	No, Meacham, 1996, WHC-SD-WM-SARR-038, Rev 1.	No, PNNL Letter, from Huckaby to Meacham OT: 073096.	No, Esch 1995 8E480 95-020	Unknown or currently undocumented	No, Kummerer, 1995, WHC-SD-WM-SARR-010, Rev 1.	No, SAIC, 1996, WHC-SD-WM-HIE-007, Rev. 0	No, Syphoning PHA, 1996, WHC-SD-WM-TI-759, Rev. 0	No, Bratzel 1996, WHC-SD-WM-TI-725	No, Anantatmula 1994 WHC-EP-0772
241-BY-106	Single shell tank	Facility Group 2 GRE - Yes Small Spontaneous Large Induced Steady State - Yes HNF-SD-WM-BIO-001, App E	No, Meacham, 1996, WHC-SD-WM-SARR-038, Rev 1.	No, PNNL Letter, from Huckaby to Meacham OT: 073096.	No, Bell 1995 WHC-SD-WM-DP-103 R. 0A	No, Webb, 1996, WHC-SD-WM-SARR-033, Rev 1	No, Kummerer, 1995, WHC-SD-WM-SARR-010, Rev 1.	No, SAIC, 1996, WHC-SD-WM-HIE-007, Rev. 0	No, Syphoning PHA, 1996, WHC-SD-WM-TI-759, Rev. 0	No, Bratzel 1996, WHC-SD-WM-TI-725	No, Anantatmula 1994 WHC-EP-0772
241-BY-107	Single shell tank	Facility Group 3 GRE - Yes Small Induced Steady State - Yes HNF-SD-WM-BIO-001, App E	No, Meacham, 1996, WHC-SD-WM-SARR-038, Rev 1.	Yes, PNNL Letter, from Huckaby to Meacham OT: 073096.	Unknown or currently undocumented	Unknown or currently undocumented	No, Kummerer, 1995, WHC-SD-WM-SARR-010, Rev 1.	No, SAIC, 1996, WHC-SD-WM-HIE-007, Rev. 0	No, Syphoning PHA, 1996, WHC-SD-WM-TI-759, Rev. 0	No, Bratzel 1996, WHC-SD-WM-TI-725	No, Anantatmula 1994 WHC-EP-0772
241-BY-108	Single shell tank	Facility Group 3 GRE - Yes Small Induced Steady State - Yes HNF-SD-WM-BIO-001, App E	No, Meacham, 1996, WHC-SD-WM-SARR-038, Rev 1.	Yes, PNNL Letter, from Huckaby to Meacham OT: 073096.	No, Baldwin 1995 WHC-SD-WM-ER-533	Unknown or currently undocumented	No, Kummerer, 1995, WHC-SD-WM-SARR-010, Rev 1.	No, SAIC, 1996, WHC-SD-WM-HIE-007, Rev. 0	No, Syphoning PHA, 1996, WHC-SD-WM-TI-759, Rev. 0	No, Bratzel 1996, WHC-SD-WM-TI-725	No, Anantatmula 1994 WHC-EP-0772

Table D3.1-3. TWRS Tank Unique Phenomena. (43 Sheets)

Field Name	Type	Flammable Gas	Ferrocyanide	Organics Separable Phase	TOC in Liquids	TOC in Solids	High Heat	Pyrophorics	Syphoning	Criticality	Corrosivity
241-BY-109	Single shell tank	Facility Group 3 GRE - Yes Small Induced Steady State - Yes HNF-SD-WM-BIO-001, App E	No, Meacham, 1996, WHC-SD-WM-SARR-038, Rev 1.	No, PNNL Letter, from Huckaby to Meacham OT: 073096.	Unknown or currently undocumented	Unknown or currently undocumented	No, Kummerer, 1995, WHC-SD-WM-SARR-010, Rev 1.	No, SAIC, 1996, WHC-SD-WM-HIE-007, Rev. 0	No, Syphoning PHA, 1996, WHC-SD-WM-TI-759, Rev. 0	No, Bratzel 1996, WHC-SD-WM-TI-725	No, Anantatmula 1994 WHC-EP-0772
241-BY-110	Single shell tank	Facility Group 3 GRE - Yes Small Induced Steady State - Yes HNF-SD-WM-BIO-001, App E	No, Meacham, 1996, WHC-SD-WM-SARR-038, Rev 1.	No, PNNL Letter, from Huckaby to Meacham OT: 073096.	No, Schreiber 1995 WHC-SD-WM-DP-153	Unknown or currently undocumented	No, Kummerer, 1995, WHC-SD-WM-SARR-010, Rev 1.	No, SAIC, 1996, WHC-SD-WM-HIE-007, Rev. 0	No, Syphoning PHA, 1996, WHC-SD-WM-TI-759, Rev. 0	No, Bratzel 1996, WHC-SD-WM-TI-725	No, Anantatmula 1994 WHC-EP-0772
241-BY-111	Single shell tank	Facility Group 3 GRE - Yes Small Induced Steady State - Yes HNF-SD-WM-BIO-001, App E	No, Meacham, 1996, WHC-SD-WM-SARR-038, Rev 1.	No, PNNL Letter, from Huckaby to Meacham OT: 073096.	Unknown or currently undocumented	Unknown or currently undocumented	No, Kummerer, 1995, WHC-SD-WM-SARR-010, Rev 1.	No, SAIC, 1996, WHC-SD-WM-HIE-007, Rev. 0	No, Syphoning PHA, 1996, WHC-SD-WM-TI-759, Rev. 0	No, Bratzel 1996, WHC-SD-WM-TI-725	No, Anantatmula 1994 WHC-EP-0772
241-BY-112	Single shell tank	Facility Group 3 GRE - Yes Small Induced Steady State - Yes HNF-SD-WM-BIO-001, App E	No, Meacham, 1996, WHC-SD-WM-SARR-038, Rev 1.	No, PNNL Letter, from Huckaby to Meacham OT: 073096.	Unknown or currently undocumented	Unknown or currently undocumented	No, Kummerer, 1995, WHC-SD-WM-SARR-010, Rev 1.	No, SAIC, 1996, WHC-SD-WM-HIE-007, Rev. 0	No, Syphoning PHA, 1996, WHC-SD-WM-TI-759, Rev. 0	No, Bratzel 1996, WHC-SD-WM-TI-725	No, Anantatmula 1994 WHC-EP-0772

Table D3.1-3. TWRS Tank Unique Phenomena. (43 Sheets)

Field Name	Type	Flammable Gas	Ferrocyanide	Organics Separable Phase	TOC in Liquids	TOC in Solids	High Heat	Pyrophorics	Syphoning	Criticality	Corrosivity
C FARM											
241-C-101	Single shell tank	Facility Group 3 GRE - Yes Small Induced Steady State - Yes HNF-SD-WM-BIO-001, App E	No, Meacham, 1996, WHC-SD-WM-SARR-038, Rev 1.	Yes, PNNL Letter, from Huckaby to Meacham OT: 073096.	Data not available	No, Webb, 1996, WHC-SD-WM-SARR-033, Rev 1	No, Kummerer, 1995, WHC-SD-WM-SARR-010, Rev 1.	No, SAIC, 1996, WHC-SD-WM-HIE-007, Rev. 0	No, Syphoning PHA, 1996, WHC-SD-WM-TI-759, Rev. 0	No, Bratzel 1996, WHC-SD-WM-TI-725	No, Anantatmula 1994 WHC-EP-0772
241-C-102	Single shell tank	Facility Group 3 GRE - Yes Small Induced Steady State - Yes HNF-SD-WM-BIO-001, App E	No, Meacham, 1996, WHC-SD-WM-SARR-038, Rev 1.	Yes, PNNL Letter, from Huckaby to Meacham OT: 073096.	No, SAIC, 1996, WHC-SD-WM-HIE-007, Rev. 0	Unknown or currently undocumented	No, Kummerer, 1995, WHC-SD-WM-SARR-010, Rev 1.	No, SAIC, 1996, WHC-SD-WM-HIE-007, Rev. 0	No, Syphoning PHA, 1996, WHC-SD-WM-TI-759, Rev. 0	No, Bratzel 1996, WHC-SD-WM-TI-725	Yes, Anantatmula 1994 WHC-EP-0772
241-C-103	Single shell tank	Facility Group 3 GRE - Yes Small Induced Steady State - Yes HNF-SD-WM-BIO-001, App E	No, Meacham, 1996, WHC-SD-WM-SARR-038, Rev 1.	Yes, PNNL Letter, from Huckaby to Meacham OT: 073096.	No, Bell 1995 WHC-SD-WM-DP-099	No, Webb, 1996, WHC-SD-WM-SARR-033, Rev 1	No, Kummerer, 1995, WHC-SD-WM-SARR-010, Rev 1.	No, SAIC, 1996, WHC-SD-WM-HIE-007, Rev. 0	No, Syphoning PHA, 1996, WHC-SD-WM-TI-759, Rev. 0	No, Bratzel 1996, WHC-SD-WM-TI-725	Yes, Anantatmula 1994 WHC-EP-0772
241-C-104	Single shell tank	Facility Group 2 GRE - Yes Small Spontaneous Large Induced Steady State - Yes HNF-SD-WM-BIO-001, App E	No, Meacham, 1996, WHC-SD-WM-SARR-038, Rev 1.	Yes, PNNL Letter, from Huckaby to Meacham OT: 073096.	Unknown or currently undocumented	No, Webb, 1996, WHC-SD-WM-SARR-033, Rev 1	No, Kummerer, 1995, WHC-SD-WM-SARR-010, Rev 1.	No, SAIC, 1996, WHC-SD-WM-HIE-007, Rev. 0	No, Syphoning PHA, 1996, WHC-SD-WM-TI-759, Rev. 0	No, Bratzel 1996, WHC-SD-WM-TI-725	No, Anantatmula 1994 WHC-EP-0772
241-C-105	Single shell tank	Facility Group 3 GRE - Yes Small Induced Steady State - Yes HNF-SD-WM-BIO-001, App E	No, Meacham, 1996, WHC-SD-WM-SARR-038, Rev 1.	Yes, PNNL Letter, from Huckaby to Meacham OT: 073096.	No, SAIC, 1996, WHC-SD-WM-HIE-007, Rev. 0	No, Webb, 1996, WHC-SD-WM-SARR-033, Rev 1	No, Kummerer, 1995, WHC-SD-WM-SARR-010, Rev 1.	No, SAIC, 1996, WHC-SD-WM-HIE-007, Rev. 0	No, Syphoning PHA, 1996, WHC-SD-WM-TI-759, Rev. 0	No, Bratzel 1996, WHC-SD-WM-TI-725	Yes, Anantatmula 1994 WHC-EP-0772

Table D3.1-3. TWRS Tank Unique Phenomena. (43 Sheets)

Field Name	Type	Flammable Gas	Ferrocyanide	Organics Separable Phase	TOC in Liquids	TOC in Solids	High Heat	Pyrophorics	Syphoning	Criticality	Corrosivity
241-C-106	Single shell tank	Facility Group 3 GRE - Yes Small Induced Steady State - Yes HNF-SD-WM-BIO-001, App E	No, Meacham, 1996, WHC-SD-WM-SARR-038, Rev 1.	Yes, PNNL Letter, from Huckaby to Meacham OT: 073096.	No, SAIC, 1996, WHC-SD-Wm-HIE-007, Rev. 0	No, Webb, 1996, WHC-SD-WM-SARR-033, Rev 1	Yes, Kummerer, 1995, WHC-SD-WM-SARR-010, Rev 1.	No, SAIC, 1996, WHC-SD-WM-HIE-007, Rev. 0	No, Syphoning PHA, 1996, WHC-SD-WM-TI-759, Rev. 0	No, Bratzel 1996, WHC-SD-WM-TI-725	Yes, Anantatmula 1994 WHC-EP-0772
241-C-107	Single shell tank	Facility Group 3 GRE - Yes Small Induced Steady State - Yes HNF-SD-WM-BIO-001, App E	No, Meacham, 1996, WHC-SD-WM-SARR-038, Rev 1.	No, PNNL Letter, from Huckaby to Meacham OT: 073096.	No, Bell 1995 WHC-SD-WM-ER-474	Unknown or currently undocumented	No, Kummerer, 1995, WHC-SD-WM-SARR-010, Rev 1.	No, SAIC, 1996, WHC-SD-WM-HIE-007, Rev. 0	No, Syphoning PHA, 1996, WHC-SD-WM-TI-759, Rev. 0	No, Bratzel 1996, WHC-SD-WM-TI-725	No, Anantatmula 1994 WHC-EP-0772
241-C-108	Single shell tank	Facility Group 3 GRE - Yes Small Induced Steady State - Yes HNF-SD-WM-BIO-001, App E	No, Meacham, 1996, WHC-SD-WM-SARR-038, Rev 1.	No, PNNL Letter, from Huckaby to Meacham OT: 073096.	Data not available	No, Webb, 1996, WHC-SD-WM-SARR-033, Rev 1	No, Kummerer, 1995, WHC-SD-WM-SARR-010, Rev 1.	No, SAIC, 1996, WHC-SD-WM-HIE-007, Rev. 0	No, Syphoning PHA, 1996, WHC-SD-WM-TI-759, Rev. 0	No, Bratzel 1996, WHC-SD-WM-TI-725	No, Anantatmula 1994 WHC-EP-0772
241-C-109	Single shell tank	Facility Group 3 GRE - Yes Small Induced Steady State - Yes HNF-SD-WM-BIO-001, App E	No, Meacham, 1996, WHC-SD-WM-SARR-038, Rev 1.	No, PNNL Letter, from Huckaby to Meacham OT: 073096.	No, Sasaki 1995 WHC-SD-WM-ER-402	No, Webb, 1996, WHC-SD-WM-SARR-033, Rev 1	No, Kummerer, 1995, WHC-SD-WM-SARR-010, Rev 1.	No, SAIC, 1996, WHC-SD-WM-HIE-007, Rev. 0	No, Syphoning PHA, 1996, WHC-SD-WM-TI-759, Rev. 0	No, Bratzel 1996, WHC-SD-WM-TI-725	No, Anantatmula 1994 WHC-EP-0772
241-C-110	Single shell tank	Facility Group 3 GRE - Yes Small Induced Steady State - Yes HNF-SD-WM-BIO-001, App E	No, Meacham, 1996, WHC-SD-WM-SARR-038, Rev 1.	No, PNNL Letter, from Huckaby to Meacham OT: 073096.	No, Simpson 1994 WHC-SD-WM-ER-367	No, Webb, 1996, WHC-SD-WM-SARR-033, Rev 1	No, Kummerer, 1995, WHC-SD-WM-SARR-010, Rev 1.	No, SAIC, 1996, WHC-SD-WM-HIE-007, Rev. 0	No, Syphoning PHA, 1996, WHC-SD-WM-TI-759, Rev. 0	No, Bratzel 1996, WHC-SD-WM-TI-725	No, Anantatmula 1994 WHC-EP-0772

Table D3.1-3. TWRS Tank Unique Phenomena. (43 Sheets)

Field Name	Type	Flammable Gas	Ferrocyanide	Organics Separable Phase	TOC in Liquids	TOC in Solids	High Heat	Pyrophorics	Syphoning	Criticality	Corrosivity
241-C-111	Single shell tank	Facility Group 3 GRE - Yes Small Induced Steady State - Yes HNF-SD-WM-BIO-001, App E	No, Meacham, 1996, WHC-SD-WM-SARR-038, Rev 1.	No, PNNL Letter, from Huckaby to Meacham OT: 073096.	No, Simpson 1995 WHC-SD-WM-ER-475	No, Webb, 1996, WHC-SD-WM-SARR-033, Rev 1	No, Kummerer, 1995, WHC-SD-WM-SARR-010, Rev 1.	No, SAIC, 1996, WHC-SD-WM-HIE-007, Rev. 0	No, Syphoning PHA, 1996, WHC-SD-WM-TI-759, Rev. 0	No, Bratzel 1996, WHC-SD-WM-TI-725	No, Anantatmula 1994 WHC-EP-0772
241-C-112	Single shell tank	Facility Group 3 GRE - Yes Small Induced Steady State - Yes HNF-SD-WM-BIO-001, App E	No, Meacham, 1996, WHC-SD-WM-SARR-038, Rev 1.	No, PNNL Letter, from Huckaby to Meacham OT: 073096.	Data not available	No, Webb, 1996, WHC-SD-WM-SARR-033, Rev 1	No, Kummerer, 1995, WHC-SD-WM-SARR-010, Rev 1.	No, SAIC, 1996, WHC-SD-WM-HIE-007, Rev. 0	No, Syphoning PHA, 1996, WHC-SD-WM-TI-759, Rev. 0	No, Bratzel 1996, WHC-SD-WM-TI-725	No, Anantatmula 1994 WHC-EP-0772
241-C-201	Single shell tank	Facility Group 3 GRE - Yes Small Induced Steady State - Yes HNF-SD-WM-BIO-001, App E	No, Meacham, 1996, WHC-SD-WM-SARR-038, Rev 1.	Yes, PNNL Letter, from Huckaby to Meacham OT: 073096.	Data not available	Yes, Webb, 1996, WHC-SD-WM-SARR-033, Rev 1	No, Kummerer, 1995, WHC-SD-WM-SARR-010, Rev 1.	No, SAIC, 1996, WHC-SD-WM-HIE-007, Rev. 0	No, Syphoning PHA, 1996, WHC-SD-WM-TI-759, Rev. 0	No, Bratzel 1996, WHC-SD-WM-TI-725	No, Anantatmula 1994 WHC-EP-0772
241-C-202	Single shell tank	Facility Group 3 GRE - Yes Small Induced Steady State - Yes HNF-SD-WM-BIO-001, App E	No, Meacham, 1996, WHC-SD-WM-SARR-038, Rev 1.	Yes, PNNL Letter, from Huckaby to Meacham OT: 073096.	Data not available	Yes, Webb, 1996, WHC-SD-WM-SARR-033, Rev 1	No, Kummerer, 1995, WHC-SD-WM-SARR-010, Rev 1.	No, SAIC, 1996, WHC-SD-WM-HIE-007, Rev. 0	No, Syphoning PHA, 1996, WHC-SD-WM-TI-759, Rev. 0	No, Bratzel 1996, WHC-SD-WM-TI-725	No, Anantatmula 1994 WHC-EP-0772
241-C-203	Single shell tank	Facility Group 3 GRE - Yes Small Induced Steady State - Yes HNF-SD-WM-BIO-001, App E	No, Meacham, 1996, WHC-SD-WM-SARR-038, Rev 1.	Yes, PNNL Letter, from Huckaby to Meacham OT: 073096.	Data not available	Unknown or currently undocumented	No, Kummerer, 1995, WHC-SD-WM-SARR-010, Rev 1.	No, SAIC, 1996, WHC-SD-WM-HIE-007, Rev. 0	No, Syphoning PHA, 1996, WHC-SD-WM-TI-759, Rev. 0	No, Bratzel 1996, WHC-SD-WM-TI-725	No, Anantatmula 1994 WHC-EP-0772

Table D3.1-3. TWRS Tank Unique Phenomena. (43 Sheets)

Field Name	Type	Flammable Gas	Ferrocyanide	Organics Separable Phase	TOC in Liquids	TOC in Solids	High Heat	Pyrophorics	Syphoning	Criticality	Corrosivity
241-C-204	Single shell tank	Facility Group 3 GRE - Yes Small Induced Steady State - Yes HNF-SD-WM-BIO-001, App E	No, Meacham, 1996, WHC-SD-WM-SARR-038, Rev 1.	Yes, PNNL Letter, from Huckaby to Meacham OT: 073096.	Data not available	No, Webb, 1996, WHC-SD-WM-SARR-033, Rev 1	No, Kummerer, 1995, WHC-SD-WM-SARR-010, Rev 1.	No, SAIC, 1996, WHC-SD-WM-HIE-007, Rev. 0	No, Syphoning PHA, 1996, WHC-SD-WM-TI-759, Rev. 0	No, Bratzel 1996, WHC-SD-WM-TI-725	No, Anantatmula 1994 WHC-EP-0772
S FARM											
241-S-101	Single shell tank	Facility Group 2 GRE - Yes Small Spontaneous Large Induced Steady State - Yes HNF-SD-WM-BIO-001, App E	No, Meacham, 1996, WHC-SD-WM-SARR-038, Rev 1.	Yes, PNNL Letter, from Huckaby to Meacham OT: 073096.	No, SAIC, 1996, WHC-SD-WM-HIE-007, Rev. 0	Unknown or currently undocumented	No, Kummerer, 1995, WHC-SD-WM-SARR-010, Rev 1.	No, SAIC, 1996, WHC-SD-WM-HIE-007, Rev. 0	No, Syphoning PHA, 1996, WHC-SD-WM-TI-759, Rev. 0	No, Bratzel 1996, WHC-SD-WM-TI-725	Yes, Anantatmula 1994 WHC-EP-0772
241-S-102	Single shell tank	Facility Group 2 GRE - Yes Small Spontaneous Large Induced Steady State - Yes HNF-SD-WM-BIO-001, App E	No, Meacham, 1996, WHC-SD-WM-SARR-038, Rev 1.	No, PNNL Letter, from Huckaby to Meacham OT: 073096.	Unknown or currently undocumented	Unknown or currently undocumented	No, Kummerer, 1995, WHC-SD-WM-SARR-010, Rev 1.	No, SAIC, 1996, WHC-SD-WM-HIE-007, Rev. 0	No, Syphoning PHA, 1996, WHC-SD-WM-TI-759, Rev. 0	No, Bratzel 1996, WHC-SD-WM-TI-725	Yes, Anantatmula 1994 WHC-EP-0772
241-S-103	Single shell tank	Facility Group 2 GRE - Yes Small Spontaneous Large Induced Steady State - Yes HNF-SD-WM-BIO-001, App E	No, Meacham, 1996, WHC-SD-WM-SARR-038, Rev 1.	Yes, PNNL Letter, from Huckaby to Meacham OT: 073096.	Unknown or currently undocumented	Unknown or currently undocumented	No, Kummerer, 1995, WHC-SD-WM-SARR-010, Rev 1.	No, SAIC, 1996, WHC-SD-WM-HIE-007, Rev. 0	No, Syphoning PHA, 1996, WHC-SD-WM-TI-759, Rev. 0	No, Bratzel 1996, WHC-SD-WM-TI-725	Yes, Anantatmula 1994 WHC-EP-0772

Table D3.1-3. TWRS Tank Unique Phenomena. (43 Sheets)

Field Name	Type	Flammable Gas	Ferrocyanide	Organics Separable Phase	TOC in Liquids	TOC in Solids	High Heat	Pyrophorics	Syphoning	Criticality	Corrosivity
241-S-104	Single shell tank	Facility Group 3 GRE - Yes Small Induced Steady State - Yes HNF-SD-WM-BIO-001, App E	No, Meacham, 1996, WHC-SD-WM-SARR-038, Rev 1.	Yes, PNNL Letter, from Huckaby to Meacham OT: 073096.	No, Simpson 1994 WHC-SD-WM-ER-370	No, Webb, 1996, WHC-SD-WM-SARR-033, Rev 1	No, Kummerer, 1995, WHC-SD-WM-SARR-010, Rev 1.	No, SAIC, 1996, WHC-SD-WM-HIE-007, Rev. 0	No, Syphoning PHA, 1996, WHC-SD-WM-TI-759, Rev. 0	No, Bratzel 1996, WHC-SD-WM-TI-725	No, Anantatmula 1994 WHC-EP-0772
241-S-105	Single shell tank	Facility Group 2 GRE - Yes Small Spontaneous Large Induced Steady State - Yes HNF-SD-WM-BIO-001, App E	No, Meacham, 1996, WHC-SD-WM-SARR-038, Rev 1.	No, PNNL Letter, from Huckaby to Meacham OT: 073096.	Unknown or currently undocumented	Unknown or currently undocumented	No, Kummerer, 1995, WHC-SD-WM-SARR-010, Rev 1.	No, SAIC, 1996, WHC-SD-WM-HIE-007, Rev. 0	No, Syphoning PHA, 1996, WHC-SD-WM-TI-759, Rev. 0	No, Bratzel 1996, WHC-SD-WM-TI-725	No, Anantatmula 1994 WHC-EP-0772
241-S-106	Single shell tank	Facility Group 2 GRE - Yes Small Spontaneous Large Induced Steady State - Yes HNF-SD-WM-BIO-001, App E	No, Meacham, 1996, WHC-SD-WM-SARR-038, Rev 1.	Yes, PNNL Letter, from Huckaby to Meacham OT: 073096.	Unknown or currently undocumented	Unknown or currently undocumented	No, Kummerer, 1995, WHC-SD-WM-SARR-010, Rev 1.	No, SAIC, 1996, WHC-SD-WM-HIE-007, Rev. 0	No, Syphoning PHA, 1996, WHC-SD-WM-TI-759, Rev. 0	No, Bratzel 1996, WHC-SD-WM-TI-725	Yes, Anantatmula 1994 WHC-EP-0772
241-S-107	Single shell tank	Facility Group 2 GRE - Yes Small Spontaneous Large Induced Steady State - Yes HNF-SD-WM-BIO-001, App E	No, Meacham, 1996, WHC-SD-WM-SARR-038, Rev 1.	Yes, PNNL Letter, from Huckaby to Meacham OT: 073096.	No, Raphael 1995 WHC-SD-WM-DP-156	Unknown or currently undocumented	No, Kummerer, 1995, WHC-SD-WM-SARR-010, Rev 1.	No, SAIC, 1996, WHC-SD-WM-HIE-007, Rev. 0	No, Syphoning PHA, 1996, WHC-SD-WM-TI-759, Rev. 0	No, Bratzel 1996, WHC-SD-WM-TI-725	Yes, Anantatmula 1994 WHC-EP-0772
241-S-108	Single shell tank	Facility Group 3 GRE - Yes Small Induced Steady State - Yes HNF-SD-WM-BIO-001, App E	No, Meacham, 1996, WHC-SD-WM-SARR-038, Rev 1.	No, PNNL Letter, from Huckaby to Meacham OT: 073096.	No, SAIC, 1996, WHC-SD-WM-HIE-007, Rev. 0	Unknown or currently undocumented	No, Kummerer, 1995, WHC-SD-WM-SARR-010, Rev 1.	No, SAIC, 1996, WHC-SD-WM-HIE-007, Rev. 0	No, Syphoning PHA, 1996, WHC-SD-WM-TI-759, Rev. 0	No, Bratzel 1996, WHC-SD-WM-TI-725	Yes, Anantatmula 1994 WHC-EP-0772

Table D3.1-3. TWRS Tank Unique Phenomena. (43 Sheets)

Field Name	Type	Flammable Gas	Ferrocyanide	Organics Separable Phase	TOC in Liquids	TOC in Solids	High Heat	Pyrophorics	Syphoning	Criticality	Corrosivity
241-S-109	Single shell tank	Facility Group 2 GRE - Yes Small Spontaneous Large Induced Steady State - Yes HNF-SD-WM-BIO-001, App E	No, Meacham, 1996, WHC-SD-WM-SARR-038, Rev 1.	Yes, PNNL Letter, from Huckaby to Meacham OT: 073096.	No, SAIC, 1996, WHC-SD-WM-HIE-007, Rev. 0	No, Webb, 1996, WHC-SD-WM-SARR-033, Rev 1	No, Kummerer, 1995, WHC-SD-WM-SARR-010, Rev 1.	No, SAIC, 1996, WHC-SD-WM-HIE-007, Rev. 0	No, Syphoning PHA, 1996, WHC-SD-WM-TI-759, Rev. 0	No, Bratzel 1996, WHC-SD-WM-TI-725	Yes, Anantatmula 1994 WHC-EP-0772
241-S-110	Single shell tank	Facility Group 3 GRE - Yes Small Induced Steady State - Yes HNF-SD-WM-BIO-001, App E	No, Meacham, 1996, WHC-SD-WM-SARR-038, Rev 1.	No, PNNL Letter, from Huckaby to Meacham OT: 073096.	Unknown or currently undocumented	Unknown or currently undocumented	No, Kummerer, 1995, WHC-SD-WM-SARR-010, Rev 1.	No, SAIC, 1996, WHC-SD-WM-HIE-007, Rev. 0	No, Syphoning PHA, 1996, WHC-SD-WM-TI-759, Rev. 0	No, Bratzel 1996, WHC-SD-WM-TI-725	Yes, Anantatmula 1994 WHC-EP-0772
241-S-111	Single shell tank	Facility Group 2 GRE - Yes Small Spontaneous Large Induced Steady State - Yes HNF-SD-WM-BIO-001, App E	No, Meacham, 1996, WHC-SD-WM-SARR-038, Rev 1.	No, PNNL Letter, from Huckaby to Meacham OT: 073096.	Unknown or currently undocumented	No, Webb, 1996, WHC-SD-WM-SARR-033, Rev 1	No, Kummerer, 1995, WHC-SD-WM-SARR-010, Rev 1.	No, SAIC, 1996, WHC-SD-WM-HIE-007, Rev. 0	No, Syphoning PHA, 1996, WHC-SD-WM-TI-759, Rev. 0	No, Bratzel 1996, WHC-SD-WM-TI-725	Yes, Anantatmula 1994 WHC-EP-0772
241-S-112	Single shell tank	Facility Group 2 GRE - Yes Small Spontaneous Large Induced Steady State - Yes HNF-SD-WM-BIO-001, App E	No, Meacham, 1996, WHC-SD-WM-SARR-038, Rev 1.	No, PNNL Letter, from Huckaby to Meacham OT: 073096.	Unknown or currently undocumented	Unknown or currently undocumented	No, Kummerer, 1995, WHC-SD-WM-SARR-010, Rev 1.	No, SAIC, 1996, WHC-SD-WM-HIE-007, Rev. 0	No, Syphoning PHA, 1996, WHC-SD-WM-TI-759, Rev. 0	No, Bratzel 1996, WHC-SD-WM-TI-725	Yes, Anantatmula 1994 WHC-EP-0772

Table D3.1-3. TWRS Tank Unique Phenomena. (43 Sheets)

Field Name	Type	Flammable Gas	Ferrocyanide	Organics Separable Phase	TOC in Liquids	TOC in Solids	High Heat	Pyrophorics	Syphoning	Criticality	Corrosivity
SX FARM											
241-SX-101	Single shell tank	Facility Group 2 GRE - Yes Small Spontaneous Large Induced Steady State - Yes HNF-SD-WM-BIO-001, App E	No, Meacham, 1996, WHC-SD-WM-SARR-038, Rev 1.	Yes, PNNL Letter, from Huckaby to Meacham OT: 073096.	No, Weiss 1990 12712-PCL90-043	Unknown or currently undocumented	No, Kummerer, 1995, WHC-SD-WM-SARR-010, Rev 1.	No, SAIC, 1996, WHC-SD-WM-HIE-007, Rev. 0	No, Syphoning PHA, 1996, WHC-SD-WM-TI-759, Rev. 0	No, Bratzel 1996, WHC-SD-WM-TI-725	Yes, Anantatmula 1994 WHC-EP-0772
241-SX-102	Single shell tank	Facility Group 2 GRE - Yes Small Spontaneous Large Induced Steady State - Yes HNF-SD-WM-BIO-001, App E	No, Meacham, 1996, WHC-SD-WM-SARR-038, Rev 1.	Yes, PNNL Letter, from Huckaby to Meacham OT: 073096.	Unknown or currently undocumented	No, Webb, 1996, WHC-SD-WM-SARR-033, Rev 1	No, Kummerer, 1995, WHC-SD-WM-SARR-010, Rev 1.	No, SAIC, 1996, WHC-SD-WM-HIE-007, Rev. 0	No, Syphoning PHA, 1996, WHC-SD-WM-TI-759, Rev. 0	No, Bratzel 1996, WHC-SD-WM-TI-725	Yes, Anantatmula 1994 WHC-EP-0772
241-SX-103	Single shell tank	Facility Group 2 GRE - Yes Small Spontaneous Large Induced Steady State - Yes HNF-SD-WM-BIO-001, App E	No, Meacham, 1996, WHC-SD-WM-SARR-038, Rev 1.	Yes, PNNL Letter, from Huckaby to Meacham OT: 073096.	Unknown or currently undocumented	Unknown or currently undocumented	Yes, Kummerer, 1995, WHC-SD-WM-SARR-010, Rev 1.	No, SAIC, 1996, WHC-SD-WM-HIE-007, Rev. 0	No, Syphoning PHA, 1996, WHC-SD-WM-TI-759, Rev. 0	No, Bratzel 1996, WHC-SD-WM-TI-725	Yes, Anantatmula 1994 WHC-EP-0772
241-SX-104	Single shell tank	Facility Group 3 GRE - Yes Small Induced Steady State - Yes HNF-SD-WM-BIO-001, App E	No, Meacham, 1996, WHC-SD-WM-SARR-038, Rev 1.	Yes, PNNL Letter, from Huckaby to Meacham OT: 073096.	No, Weiss 1988 12221-PCL88-147 R.1	Unknown or currently undocumented	No, Kummerer, 1995, WHC-SD-WM-SARR-010, Rev 1.	No, SAIC, 1996, WHC-SD-WM-HIE-007, Rev. 0	No, Syphoning PHA, 1996, WHC-SD-WM-TI-759, Rev. 0	No, Bratzel 1996, WHC-SD-WM-TI-725	No, Anantatmula 1994 WHC-EP-0772

Table D3.1-3. TWRS Tank Unique Phenomena. (43 Sheets)

Field Name	Type	Flammable Gas	Ferrocyanide	Organics Separable Phase	TOC in Liquids	TOC in Solids	High Heat	Pyrophorics	Syphoning	Criticality	Corrosivity
241-SX-105	Single shell tank	Facility Group 2 GRE - Yes Small Spontaneous Large Induced Steady State - Yes HNF-SD-WM-BIO-001, App E	No, Meacham, 1996, WHC-SD-WM-SARR-038, Rev 1.	Yes, PNNL Letter, from Huckaby to Meacham OT: 073096.	Unknown or currently undocumented	Unknown or currently undocumented	No, Kummerer, 1995, WHC-SD-WM-SARR-010, Rev 1.	No, SAIC, 1996, WHC-SD-WM-HIE-007, Rev. 0	No, Syphoning PHA, 1996, WHC-SD-WM-TI-759, Rev. 0	No, Bratzel 1996, WHC-SD-WM-TI-725	Yes, Anantatmula 1994 WHC-EP-0772
241-SX-106	Single shell tank	Facility Group 2 GRE - Yes Small Spontaneous Large Induced Steady State - Yes HNF-SD-WM-BIO-001, App E	No, Meacham, 1996, WHC-SD-WM-SARR-038, Rev 1.	Yes, PNNL Letter, from Huckaby to Meacham OT: 073096.	Unknown or currently undocumented	Unknown or currently undocumented	No, Kummerer, 1995, WHC-SD-WM-SARR-010, Rev 1.	No, SAIC, 1996, WHC-SD-WM-HIE-007, Rev. 0	No, Syphoning PHA, 1996, WHC-SD-WM-TI-759, Rev. 0	No, Bratzel 1996, WHC-SD-WM-TI-725	Yes, Anantatmula 1994 WHC-EP-0772
241-SX-107	Single shell tank	Facility Group 3 GRE - Yes Small Induced Steady State - Yes HNF-SD-WM-BIO-001, App E	No, Meacham, 1996, WHC-SD-WM-SARR-038, Rev 1.	Yes, PNNL Letter, from Huckaby to Meacham OT: 073096.	Unknown or currently undocumented	Unknown or currently undocumented	Yes, Kummerer, 1995, WHC-SD-WM-SARR-010, Rev 1.	No, SAIC, 1996, WHC-SD-WM-HIE-007, Rev. 0	No, Syphoning PHA, 1996, WHC-SD-WM-TI-759, Rev. 0	No, Bratzel 1996, WHC-SD-WM-TI-725	No, Anantatmula 1994 WHC-EP-0772
241-SX-108	Single shell tank	Facility Group 3 GRE - Yes Small Induced Steady State - Yes HNF-SD-WM-BIO-001, App E	No, Meacham, 1996, WHC-SD-WM-SARR-038, Rev 1.	Yes, PNNL Letter, from Huckaby to Meacham OT: 073096.	N/A	No, Webb, 1996, WHC-SD-WM-SARR-033, Rev 1	Yes, Kummerer, 1995, WHC-SD-WM-SARR-010, Rev 1.	No, SAIC, 1996, WHC-SD-WM-HIE-007, Rev. 0	No, Syphoning PHA, 1996, WHC-SD-WM-TI-759, Rev. 0	No, Bratzel 1996, WHC-SD-WM-TI-725	No, Anantatmula 1994 WHC-EP-0772
241-SX-109	Single shell tank	Facility Group 2 GRE - Yes Small Spontaneous Large Induced Steady State - Yes HNF-SD-WM-BIO-001, App E	No, Meacham, 1996, WHC-SD-WM-SARR-038, Rev 1.	Yes, PNNL Letter, from Huckaby to Meacham OT: 073096.	Unknown or currently undocumented	Unknown or currently undocumented	Yes, Kummerer, 1995, WHC-SD-WM-SARR-010, Rev 1.	No, SAIC, 1996, WHC-SD-WM-HIE-007, Rev. 0	No, Syphoning PHA, 1996, WHC-SD-WM-TI-759, Rev. 0	No, Bratzel 1996, WHC-SD-WM-TI-725	No, Anantatmula 1994 WHC-EP-0772

Table D3.1-3. TWRS Tank Unique Phenomena. (43 Sheets)

Field Name	Type	Flammable Gas	Ferrocyanide	Organics Separable Phase	TOC in Liquids	TOC in Solids	High Heat	Pyrophorics	Syphoning	Criticality	Corrosivity
241-SX-110	Single shell tank	Facility Group 3 GRE - Yes Small Induced Steady State - Yes HNF-SD-WM-BIO-001, App E	No, Meacham, 1996, WHC-SD-WM-SARR-038, Rev 1.	Yes, PNNL Letter, from Huckaby to Meacham OT: 073096.	N/A	Unknown or currently undocumented	Yes, Kummerer, 1995, WHC-SD-WM-SARR-010, Rev 1.	No, SAIC, 1996, WHC-SD-WM-HIE-007, Rev. 0	No, Syphoning PHA, 1996, WHC-SD-WM-TI-759, Rev. 0	No, Bratzel 1996, WHC-SD-WM-TI-725	No, Anantatmula 1994 WHC-EP-0772
241-SX-111	Single shell tank	Facility Group 3 GRE - Yes Small Induced Steady State - Yes HNF-SD-WM-BIO-001, App E	No, Meacham, 1996, WHC-SD-WM-SARR-038, Rev 1.	Yes, PNNL Letter, from Huckaby to Meacham OT: 073096.	Unknown or currently undocumented	Unknown or currently undocumented	Yes, Kummerer, 1995, WHC-SD-WM-SARR-010, Rev 1.	No, SAIC, 1996, WHC-SD-WM-HIE-007, Rev. 0	No, Syphoning PHA, 1996, WHC-SD-WM-TI-759, Rev. 0	No, Bratzel 1996, WHC-SD-WM-TI-725	No, Anantatmula 1994 WHC-EP-0772
241-SX-112	Single shell tank	Facility Group 3 GRE - Yes Small Induced Steady State - Yes HNF-SD-WM-BIO-001, App E	No, Meacham, 1996, WHC-SD-WM-SARR-038, Rev 1.	Yes, PNNL Letter, from Huckaby to Meacham OT: 073096.	Unknown or currently undocumented	Unknown or currently undocumented	Yes, Kummerer, 1995, WHC-SD-WM-SARR-010, Rev 1.	No, SAIC, 1996, WHC-SD-WM-HIE-007, Rev. 0	No, Syphoning PHA, 1996, WHC-SD-WM-TI-759, Rev. 0	No, Bratzel 1996, WHC-SD-WM-TI-725	No, Anantatmula 1994 WHC-EP-0772
241-SX-113	Single shell tank	Facility Group 3 GRE - Yes Small Induced Steady State - Yes HNF-SD-WM-BIO-001, App E	No, Meacham, 1996, WHC-SD-WM-SARR-038, Rev 1.	Yes, PNNL Letter, from Huckaby to Meacham OT: 073096.	N/A	No, Webb, 1996, WHC-SD-WM-SARR-033, Rev 1	No, Kummerer, 1995, WHC-SD-WM-SARR-010, Rev 1.	No, SAIC, 1996, WHC-SD-WM-HIE-007, Rev. 0	No, Syphoning PHA, 1996, WHC-SD-WM-TI-759, Rev. 0	No, Bratzel 1996, WHC-SD-WM-TI-725	No, Anantatmula 1994 WHC-EP-0772
241-SX-114	Single shell tank	Facility Group 3 GRE - Yes Small Induced Steady State - Yes HNF-SD-WM-BIO-001, App E	No, Meacham, 1996, WHC-SD-WM-SARR-038, Rev 1.	Yes, PNNL Letter, from Huckaby to Meacham OT: 073096.	Unknown or currently undocumented	Unknown or currently undocumented	Yes, Kummerer, 1995, WHC-SD-WM-SARR-010, Rev 1.	No, SAIC, 1996, WHC-SD-WM-HIE-007, Rev. 0	No, Syphoning PHA, 1996, WHC-SD-WM-TI-759, Rev. 0	No, Bratzel 1996, WHC-SD-WM-TI-725	No, Anantatmula 1994 WHC-EP-0772

Table D3.1-3. TWRS Tank Unique Phenomena. (43 Sheets)

Field Name	Type	Flammable Gas	Ferrocyanide	Organics Separable Phase	TOC in Liquids	TOC in Solids	High Heat	Pyrophorics	Syphoning	Criticality	Corrosivity
241-SX-115	Single shell tank	Facility Group 3 GRE - Yes Small Induced Steady State - Yes HNF-SD-WM-BIO-001, App E	No, Meacham, 1996, WHC-SD-WM-SARR-038, Rev 1.	Yes, PNNL Letter, from Huckaby to Meacham OT: 073096.	N/A	Unknown or currently undocumented	No, Kummerer, 1995, WHC-SD-WM-SARR-010, Rev 1.	No, SAIC, 1996, WHC-SD-WM-HIE-007, Rev. 0	No, Syphoning PHA, 1996, WHC-SD-WM-TI-759, Rev. 0	No, Bratzel 1996, WHC-SD-WM-TI-725	No, Anantatmula 1994 WHC-EP-0772
SY FARM											
241-SY-101	Double shell tank	GRE - Yes Large Spontaneous Large Induced Steady State - Yes LA-UR-92-3196, Rev. 14	No, Meacham, 1996, WHC-SD-WM-SARR-038, Rev 1.	Yes, PNNL Letter, from Huckaby to Meacham OT: 073096.	Unknown or currently undocumented	No, (Bulk) SAIC, 1996, WHC-SD-WM-HIE-007, Rev. 0	Yes, Kummerer, 1995, WHC-SD-WM-SARR-010, Rev 1.	No, SAIC, 1996, WHC-SD-WM-HIE-007, Rev. 0	Yes, Syphoning PHA, 1996, WHC-SD-WM-TI-759, Rev. 0	No, Bratzel 1996, WHC-SD-WM-TI-725	No, SAIC, 1996, WHC-SD-WM-HIE-007, Rev. 0
241-SY-102	Double shell tank	Facility Group 2 GRE - Yes Small Spontaneous Large Induced Steady State - Yes HNF-SD-WM-BIO-001, App E	No, Meacham, 1996, WHC-SD-WM-SARR-038, Rev 1.	Yes, PNNL Letter, from Huckaby to Meacham OT: 073096.	No, SAIC, 1996, WHC-SD-WM-HIE-007, Rev. 0	No, SAIC, 1996, WHC-SD-WM-HIE-007, Rev. 0	No (but potential for Tank Bump), Kummerer, 1995, WHC-SD-WM-SARR-010, Rev 1.	No, SAIC, 1996, WHC-SD-WM-HIE-007, Rev. 0	Yes, Syphoning PHA, 1996, WHC-SD-WM-TI-759, Rev. 0	No, Bratzel 1996, WHC-SD-WM-TI-725	No, SAIC, 1996, WHC-SD-WM-HIE-007, Rev. 0
241-SY-103	Double shell tank	Facility Group 1 GRE - Yes Large Spontaneous Large Induced Steady State - Yes HNF-SD-WM-BIO-001, App E	No, Meacham, 1996, WHC-SD-WM-SARR-038, Rev 1.	Yes, PNNL Letter, from Huckaby to Meacham OT: 073096.	No, SAIC, 1996, WHC-SD-WM-HIE-007, Rev. 0	No, SAIC, 1996, WHC-SD-WM-HIE-007, Rev. 0	No (but potential for Tank Bump), Kummerer, 1995, WHC-SD-WM-SARR-010, Rev 1.	No, SAIC, 1996, WHC-SD-WM-HIE-007, Rev. 0	Yes, Syphoning PHA, 1996, WHC-SD-WM-TI-759, Rev. 0	No, Bratzel 1996, WHC-SD-WM-TI-725	No, SAIC, 1996, WHC-SD-WM-HIE-007, Rev.

Table D3.1-3. TWRS Tank Unique Phenomena. (43 Sheets)

Field Name	Type	Flammable Gas	Ferrocyanide	Organics Separable Phase	TOC in Liquids	TOC in Solids	High Heat	Pyrophorics	Syphoning	Criticality	Corrosivity
T FARM											
241-T-101	Single shell tank	Facility Group 3 GRE - Yes Small Induced Steady State - Yes HNF-SD-WM-BIO-001, App E	No, Meacham, 1996, WHC-SD-WM-SARR-038, Rev 1.	Yes, PNNL Letter, from Huckaby to Meacham OT: 073096.	No evidence in non-Watchlist tank, assumed to be No	Unknown or currently undocumented	No, Kummerer, 1995, WHC-SD-WM-SARR-010, Rev 1.	No, SAIC, 1996, WHC-SD-WM-HIE-007, Rev. 0	No, Syphoning PHA, 1996, WHC-SD-WM-TI-759, Rev. 0	No, Bratzel 1996, WHC-SD-WM-TI-725	Assumed Leaker
241-T-102	Single shell tank	Facility Group 3 GRE - Yes Small Induced Steady State - Yes HNF-SD-WM-BIO-001, App E	No, Meacham, 1996, WHC-SD-WM-SARR-038, Rev 1.	Yes, PNNL Letter, from Huckaby to Meacham OT: 073096.	No, PNL-10101	No, Webb, 1996, WHC-SD-WM-SARR-033, Rev 1	No, Kummerer, 1995, WHC-SD-WM-SARR-010, Rev 1.	No, SAIC, 1996, WHC-SD-WM-HIE-007, Rev. 0	No, Syphoning PHA, 1996, WHC-SD-WM-TI-759, Rev. 0	No, Bratzel 1996, WHC-SD-WM-TI-725	No, Anantatmula 1994 WHC-EP-0772
241-T-103	Single shell tank	Facility Group 3 GRE - Yes Small Induced Steady State - Yes HNF-SD-WM-BIO-001, App E	No, Meacham, 1996, WHC-SD-WM-SARR-038, Rev 1.	Yes, PNNL Letter, from Huckaby to Meacham OT: 073096.	No evidence in non-Watchlist tank, assumed to be No	Unknown or currently undocumented	No, Kummerer, 1995, WHC-SD-WM-SARR-010, Rev 1.	No, SAIC, 1996, WHC-SD-WM-HIE-007, Rev. 0	No, Syphoning PHA, 1996, WHC-SD-WM-TI-759, Rev. 0	No, Bratzel 1996, WHC-SD-WM-TI-725	Assumed Leaker
241-T-104	Single shell tank	Facility Group 3 GRE - Yes Small Induced Steady State - Yes HNF-SD-WM-BIO-001, App E	No, Meacham, 1996, WHC-SD-WM-SARR-038, Rev 1.	No, PNNL Letter, from Huckaby to Meacham OT: 073096.	No, WHC-SD-WM-ER-372	No, Webb, 1996, WHC-SD-WM-SARR-033, Rev 1	No, Kummerer, 1995, WHC-SD-WM-SARR-010, Rev 1.	No, SAIC, 1996, WHC-SD-WM-HIE-007, Rev. 0	No, Syphoning PHA, 1996, WHC-SD-WM-TI-759, Rev. 0	No, Bratzel 1996, WHC-SD-WM-TI-725	Yes, Anantatmula 1994 WHC-EP-0772
241-T-105	Single shell tank	Facility Group 3 GRE - Yes Small Induced Steady State - Yes HNF-SD-WM-BIO-001, App E	No, Meacham, 1996, WHC-SD-WM-SARR-038, Rev 1.	Yes, PNNL Letter, from Huckaby to Meacham OT: 073096.	No, WHC-SD-WM-ER-369	No, Webb, 1996, WHC-SD-WM-SARR-033, Rev 1	No, Kummerer, 1995, WHC-SD-WM-SARR-010, Rev 1.	No, SAIC, 1996, WHC-SD-WM-HIE-007, Rev. 0	No, Syphoning PHA, 1996, WHC-SD-WM-TI-759, Rev. 0	No, Bratzel 1996, WHC-SD-WM-TI-725	No, Anantatmula 1994 WHC-EP-0772

Table D3.1-3. TWRS Tank Unique Phenomena. (43 Sheets)

Field Name	Type	Flammable Gas	Ferrocyanide	Organics Separable Phase	TOC in Liquids	TOC in Solids	High Heat	Pyrophorics	Syphoning	Criticality	Corrosivity
241-T-106	Single shell tank	Facility Group 3 GRE - Yes Small Induced Steady State - Yes HNF-SD-WM-BIO-001, App E	No, Meacham, 1996, WHC-SD-WM-SARR-038, Rev 1.	Yes, PNNL Letter, from Huckaby to Meacham OT: 073096.	No, WHC-SD-WM-DP-143	No, Webb, 1996, WHC-SD-WM-SARR-033, Rev 1	No, Kummerer, 1995, WHC-SD-WM-SARR-010, Rev 1.	No, SAIC, 1996, WHC-SD-WM-HIE-007, Rev. 0	No, Syphoning PHA, 1996, WHC-SD-WM-TI-759, Rev. 0	No, Bratzel 1996, WHC-SD-WM-TI-725	Assumed Leaker
241-T-107	Single shell tank	Facility Group 3 GRE - Yes Small Induced Steady State - Yes HNF-SD-WM-BIO-001, App E	No, Meacham, 1996, WHC-SD-WM-SARR-038, Rev 1.	No, PNNL Letter, from Huckaby to Meacham OT: 073096.	No, WHC-SD-WM-ER-382	No, Webb, 1996, WHC-SD-WM-SARR-033, Rev 1	No, Kummerer, 1995, WHC-SD-WM-SARR-010, Rev 1.	No, SAIC, 1996, WHC-SD-WM-HIE-007, Rev. 0	No, Syphoning PHA, 1996, WHC-SD-WM-TI-759, Rev. 0	No, Bratzel 1996, WHC-SD-WM-TI-725	Assumed Leaker
241-T-108	Single shell tank	Facility Group 3 GRE - Yes Small Induced Steady State - Yes HNF-SD-WM-BIO-001, App E	No, Meacham, 1996, WHC-SD-WM-SARR-038, Rev 1.	Yes, PNNL Letter, from Huckaby to Meacham OT: 073096.	No, WHC-SD-WM-DP-141	No, Webb, 1996, WHC-SD-WM-SARR-033, Rev 1	No, Kummerer, 1995, WHC-SD-WM-SARR-010, Rev 1.	No, SAIC, 1996, WHC-SD-WM-HIE-007, Rev. 0	No, Syphoning PHA, 1996, WHC-SD-WM-TI-759, Rev. 0	No, Bratzel 1996, WHC-SD-WM-TI-725	Assumed Leaker
241-T-109	Single shell tank	Facility Group 3 GRE - Yes Small Induced Steady State - Yes HNF-SD-WM-BIO-001, App E	No, Meacham, 1996, WHC-SD-WM-SARR-038, Rev 1.	Yes, PNNL Letter, from Huckaby to Meacham OT: 073096.	No evidence in non-Watchlist tank, assumed to be No	No, Webb, 1996, WHC-SD-WM-SARR-033, Rev 1	No, Kummerer, 1995, WHC-SD-WM-SARR-010, Rev 1.	No, SAIC, 1996, WHC-SD-WM-HIE-007, Rev. 0	No, Syphoning PHA, 1996, WHC-SD-WM-TI-759, Rev. 0	No, Bratzel 1996, WHC-SD-WM-TI-725	Assumed Leaker
241-T-110	Single shell tank	Facility Group 3 GRE - Yes Small Induced Steady State - Yes HNF-SD-WM-BIO-001, App E	No, Meacham, 1996, WHC-SD-WM-SARR-038, Rev 1.	No, PNNL Letter, from Huckaby to Meacham OT: 073096	No evidence in non-Watchlist tank, assumed to be No	Unknown or currently undocumented	No, Kummerer, 1995, WHC-SD-WM-SARR-010, Rev 1.	No, SAIC, 1996, WHC-SD-WM-HIE-007, Rev. 0	No, Syphoning PHA, 1996, WHC-SD-WM-TI-759, Rev. 0	No, Bratzel 1996, WHC-SD-WM-TI-725	Yes, Anantatmula 1994 WHC-EP-0772

Table D3.1-3. TWRS Tank Unique Phenomena. (43 Sheets)

Field Name	Type	Flammable Gas	Ferrocyanide	Organics Separable Phase	TOC in Liquids	TOC in Solids	High Heat	Pyrophorics	Syphoning	Criticality	Corrosivity
241-T-111	Single shell tank	Facility Group 3 GRE - Yes Small Induced Steady State - Yes HNF-SD-WM-BIO-001, App E	No, Meacham, 1996, WHC-SD-WM-SARR-038, Rev 1.	No, PNNL Letter, from Huckaby to Meacham OT: 073096.	Yes, WHC-SD-WM-ER-540 WL: 2/94	No, Webb, 1996, WHC-SD-WM-SARR-033, Rev 1	No, Kummerer, 1995, WHC-SD-WM-SARR-010, Rev 1.	No, SAIC, 1996, WHC-SD-WM-HIE-007, Rev. 0	No, Syphoning PHA, 1996, WHC-SD-WM-TI-759, Rev. 0	No, Bratzel 1996, WHC-SD-WM-TI-725	Assumed Leaker
241-T-112	Single shell tank	Facility Group 3 GRE - Yes Small Induced Steady State - Yes HNF-SD-WM-BIO-001, App E	No, Meacham, 1996, WHC-SD-WM-SARR-038, Rev 1.	Yes, PNNL Letter, from Huckaby to Meacham OT: 073096.	No evidence in non-Watchlist tank, assumed to be No	Unknown or currently undocumented	No, Kummerer, 1995, WHC-SD-WM-SARR-010, Rev 1.	No, SAIC, 1996, WHC-SD-WM-HIE-007, Rev. 0	No, Syphoning PHA, 1996, WHC-SD-WM-TI-759, Rev. 0	No, Bratzel 1996, WHC-SD-WM-TI-725	No, Anantatmula 1994 WHC-EP-0772
241-T-201	Single shell tank	Facility Group 2 GRE - Yes Small Spontaneous Large Induced Steady State - Yes HNF-SD-WM-BIO-001, App E	No, Meacham, 1996, WHC-SD-WM-SARR-038, Rev 1.	Yes, PNNL Letter, from Huckaby to Meacham OT: 073096.	No evidence in non-Watchlist tank, assumed to be No	Unknown or currently undocumented	No, Kummerer, 1995, WHC-SD-WM-SARR-010, Rev 1.	No, SAIC, 1996, WHC-SD-WM-HIE-007, Rev. 0	No, Syphoning PHA, 1996, WHC-SD-WM-TI-759, Rev. 0	No, Bratzel 1996, WHC-SD-WM-TI-725	No, Anantatmula 1994 WHC-EP-0772
241-T-202	Single shell tank	Facility Group 2 GRE - Yes Small Spontaneous Large Induced Steady State - Yes HNF-SD-WM-BIO-001, App E	No, Meacham, 1996, WHC-SD-WM-SARR-038, Rev 1.	Yes, PNNL Letter, from Huckaby to Meacham OT: 073096.	No evidence in non-Watchlist tank, assumed to be No	Unknown or currently undocumented	No, Kummerer, 1995, WHC-SD-WM-SARR-010, Rev 1.	No, SAIC, 1996, WHC-SD-WM-HIE-007, Rev. 0	No, Syphoning PHA, 1996, WHC-SD-WM-TI-759, Rev. 0	No, Bratzel 1996, WHC-SD-WM-TI-725	No, Anantatmula 1994 WHC-EP-0772
241-T-203	Single shell tank	Facility Group 3 GRE - Yes Small Induced Steady State - Yes HNF-SD-WM-BIO-001, App E	No, Meacham, 1996, WHC-SD-WM-SARR-038, Rev 1.	Yes, PNNL Letter, from Huckaby to Meacham OT: 073096.	No evidence in non-Watchlist tank, assumed to be No	Unknown or currently undocumented	No, Kummerer, 1995, WHC-SD-WM-SARR-010, Rev 1.	No, SAIC, 1996, WHC-SD-WM-HIE-007, Rev. 0	No, Syphoning PHA, 1996, WHC-SD-WM-TI-759, Rev. 0	No, Bratzel 1996, WHC-SD-WM-TI-725	No, Anantatmula 1994 WHC-EP-0772

Table D3.1-3. TWRS Tank Unique Phenomena. (43 Sheets)

Field Name	Type	Flammable Gas	Ferrocyanide	Organics Separable Phase	TOC in Liquids	TOC in Solids	High Heat	Pyrophorics	Syphoning	Criticality	Corrosivity
241-T-204	Single shell tank	Facility Group 2 GRE - Yes Small Spontaneous Large Induced Steady State - Yes HNF-SD-WM-BIO-001, App E	No, Meacham, 1996, WHC-SD-WM-SARR-038, Rev 1.	Yes, PNNL Letter, from Huckaby to Meacham OT: 073096.	No evidence in non-Watchlist tank, assumed to be No	Unknown or currently undocumented	No, Kummerer, 1995, WHC-SD-WM-SARR-010, Rev 1.	No, SAIC, 1996, WHC-SD-WM-HIE-007, Rev. 0	No, Syphoning PHA, 1996, WHC-SD-WM-TI-759, Rev. 0	No, Bratzel 1996, WHC-SD-WM-TI-725	No, Anantatmula 1994 WHC-EP-0772
TX FARM											
241-TX-101	Single shell tank	Facility Group 3 GRE - Yes Small Induced Steady State - Yes HNF-SD-WM-BIO-001, App E	No, Meacham, 1996, WHC-SD-WM-SARR-038, Rev 1.	Yes, PNNL Letter, from Huckaby to Meacham OT: 073096.	No evidence in non-Watchlist tank, assumed to be No	Unknown or currently undocumented	No, Kummerer, 1995, WHC-SD-WM-SARR-010, Rev 1.	No, SAIC, 1996, WHC-SD-WM-HIE-007, Rev. 0	No, Syphoning PHA, 1996, WHC-SD-WM-TI-759, Rev. 0	No, Bratzel 1996, WHC-SD-WM-TI-725	No, Anantatmula 1994 WHC-EP-0772
241-TX-102	Single shell tank	Facility Group 2 GRE - Yes Small Spontaneous Large Induced Steady State - Yes HNF-SD-WM-BIO-001, App E	No, Meacham, 1996, WHC-SD-WM-SARR-038, Rev 1.	Yes, PNNL Letter, from Huckaby to Meacham OT: 073096.	No evidence in non-Watchlist tank, assumed to be No	No, Webb, 1996, WHC-SD-WM-SARR-033, Rev 1	No, Kummerer, 1995, WHC-SD-WM-SARR-010, Rev 1.	No, SAIC, 1996, WHC-SD-WM-HIE-007, Rev. 0	No, Syphoning PHA, 1996, WHC-SD-WM-TI-759, Rev. 0	No, Bratzel 1996, WHC-SD-WM-TI-725	No, Anantatmula 1994 WHC-EP-0772
241-TX-103	Single shell tank	Facility Group 3 GRE - Yes Small Induced Steady State - Yes HNF-SD-WM-BIO-001, App E	No, Meacham, 1996, WHC-SD-WM-SARR-038, Rev 1.	Yes, PNNL Letter, from Huckaby to Meacham OT: 073096.	No evidence in non-Watchlist tank, assumed to be No	Unknown or currently undocumented	No, Kummerer, 1995, WHC-SD-WM-SARR-010, Rev 1.	No, SAIC, 1996, WHC-SD-WM-HIE-007, Rev. 0	No, Syphoning PHA, 1996, WHC-SD-WM-TI-759, Rev. 0	No, Bratzel 1996, WHC-SD-WM-TI-725	No, Anantatmula 1994 WHC-EP-0772
241-TX-104	Single shell tank	Facility Group 3 GRE - Yes Small Induced Steady State - Yes HNF-SD-WM-BIO-001, App E	No, Meacham, 1996, WHC-SD-WM-SARR-038, Rev 1.	Yes, PNNL Letter, from Huckaby to Meacham OT: 073096.	No evidence in non-Watchlist tank, assumed to be No	Unknown or currently undocumented	No, Kummerer, 1995, WHC-SD-WM-SARR-010, Rev 1.	No, SAIC, 1996, WHC-SD-WM-HIE-007, Rev. 0	No, Syphoning PHA, 1996, WHC-SD-WM-TI-759, Rev. 0	No, Bratzel 1996, WHC-SD-WM-TI-725	No, Anantatmula 1994 WHC-EP-0772

Table D3.1-3. TWRS Tank Unique Phenomena. (43 Sheets)

Field Name	Type	Flammable Gas	Ferrocyanide	Organics Separable Phase	TOC in Liquids	TOC in Solids	High Heat	Pyrophorics	Syphoning	Criticality	Corrosivity
241-TX-105	Single shell tank	Facility Group 3 GRE - Yes Small Induced Steady State - Yes HNF-SD-WM-BIO-001, App E	No, Meacham, 1996, WHC-SD-WM-SARR-038, Rev 1.	No, PNNL Letter, from Huckaby to Meacham OT: 073096.	No Analysis WL: 1/91	Unknown or currently undocumented	No, Kummerer, 1995, WHC-SD-WM-SARR-010, Rev 1.	No, SAIC, 1996, WHC-SD-WM-HIE-007, Rev. 0	No, Syphoning PHA, 1996, WHC-SD-WM-TI-759, Rev. 0	No, Bratzel 1996, WHC-SD-WM-TI-725	Assumed Leaker
241-TX-106	Single shell tank	Facility Group 3 GRE - Yes Small Induced Steady State - Yes HNF-SD-WM-BIO-001, App E	No, Meacham, 1996, WHC-SD-WM-SARR-038, Rev 1.	Yes, PNNL Letter, from Huckaby to Meacham OT: 073096.	No evidence in non-Watchlist tank, assumed to be No	Unknown or currently undocumented	No, Kummerer, 1995, WHC-SD-WM-SARR-010, Rev 1.	No, SAIC, 1996, WHC-SD-WM-HIE-007, Rev. 0	No, Syphoning PHA, 1996, WHC-SD-WM-TI-759, Rev. 0	No, Bratzel 1996, WHC-SD-WM-TI-725	No, Anantatmula 1994 WHC-EP-0772
241-TX-107	Single shell tank	Facility Group 3 GRE - Yes Small Induced Steady State - Yes HNF-SD-WM-BIO-001, App E	No, Meacham, 1996, WHC-SD-WM-SARR-038, Rev 1.	Yes, PNNL Letter, from Huckaby to Meacham OT: 073096.	No evidence in non-Watchlist tank, assumed to be No	No, Webb, 1996, WHC-SD-WM-SARR-033, Rev 1	No, Kummerer, 1995, WHC-SD-WM-SARR-010, Rev 1.	No, SAIC, 1996, WHC-SD-WM-HIE-007, Rev. 0	No, Syphoning PHA, 1996, WHC-SD-WM-TI-759, Rev. 0	No, Bratzel 1996, WHC-SD-WM-TI-725	Assumed Leaker
241-TX-108	Single shell tank	Facility Group 3 GRE - Yes Small Induced Steady State - Yes HNF-SD-WM-BIO-001, App E	No, Meacham, 1996, WHC-SD-WM-SARR-038, Rev 1.	Yes, PNNL Letter, from Huckaby to Meacham OT: 073096.	No evidence in non-Watchlist tank, assumed to be No	Unknown or currently undocumented	No, Kummerer, 1995, WHC-SD-WM-SARR-010, Rev 1.	No, SAIC, 1996, WHC-SD-WM-HIE-007, Rev. 0	No, Syphoning PHA, 1996, WHC-SD-WM-TI-759, Rev. 0	No, Bratzel 1996, WHC-SD-WM-TI-725	No, Anantatmula 1994 WHC-EP-0772
241-TX-109	Single shell tank	Facility Group 3 GRE - Yes Small Induced Steady State - Yes HNF-SD-WM-BIO-001, App E	No, Meacham, 1996, WHC-SD-WM-SARR-038, Rev 1.	Yes, PNNL Letter, from Huckaby to Meacham OT: 073096.	No evidence in non-Watchlist tank, assumed to be No	Unknown or currently undocumented	No, Kummerer, 1995, WHC-SD-WM-SARR-010, Rev 1.	No, SAIC, 1996, WHC-SD-WM-HIE-007, Rev. 0	No, Syphoning PHA, 1996, WHC-SD-WM-TI-759, Rev. 0	No, Bratzel 1996, WHC-SD-WM-TI-725	No, Anantatmula 1994 WHC-EP-0772

Table D3.1-3. TWRS Tank Unique Phenomena. (43 Sheets)

Field Name	Type	Flammable Gas	Ferrocyanide	Organics Separable Phase	TOC in Liquids	TOC in Solids	High Heat	Pyrophorics	Syphoning	Criticality	Corrosivity
241-TX-110	Single shell tank	Facility Group 3 GRE - Yes Small Induced Steady State - Yes HNF-SD-WM-BIO-001, App E	No, Meacham, 1996, WHC-SD-WM-SARR-038, Rev 1.	Yes, PNNL Letter, from Huckaby to Meacham OT: 073096.	No evidence in non-Watchlist tank, assumed to be No	Unknown or currently undocumented	No, Kummerer, 1995, WHC-SD-WM-SARR-010, Rev 1.	No, SAIC, 1996, WHC-SD-WM-HIE-007, Rev. 0	No, Syphoning PHA, 1996, WHC-SD-WM-TI-759, Rev. 0	No, Bratzel 1996, WHC-SD-WM-TI-725	Assumed Leaker
241-TX-111	Single shell tank	Facility Group 2 GRE - Yes Small Spontaneous Large Induced Steady State - Yes HNF-SD-WM-BIO-001, App E	No, Meacham, 1996, WHC-SD-WM-SARR-038, Rev 1.	No, PNNL Letter, from Huckaby to Meacham OT: 073096.	No evidence in non-Watchlist tank, assumed to be No	Unknown or currently undocumented	No, Kummerer, 1995, WHC-SD-WM-SARR-010, Rev 1.	No, SAIC, 1996, WHC-SD-WM-HIE-007, Rev. 0	No, Syphoning PHA, 1996, WHC-SD-WM-TI-759, Rev. 0	No, Bratzel 1996, WHC-SD-WM-TI-725	No, Anantatmula 1994 WHC-EP-0772
241-TX-112	Single shell tank	Facility Group 2 GRE - Yes Small Spontaneous Large Induced Steady State - Yes HNF-SD-WM-BIO-001, App E	No, Meacham, 1996, WHC-SD-WM-SARR-038, Rev 1.	Yes, PNNL Letter, from Huckaby to Meacham OT: 073096.	No evidence in non-Watchlist tank, assumed to be No	Unknown or currently undocumented	No, Kummerer, 1995, WHC-SD-WM-SARR-010, Rev 1.	No, SAIC, 1996, WHC-SD-WM-HIE-007, Rev. 0	No, Syphoning PHA, 1996, WHC-SD-WM-TI-759, Rev. 0	No, Bratzel 1996, WHC-SD-WM-TI-725	No, Anantatmula 1994 WHC-EP-0772
241-TX-113	Single shell tank	Facility Group 2 GRE - Yes Small Spontaneous Large Induced Steady State - Yes HNF-SD-WM-BIO-001, App E	No, Meacham, 1996, WHC-SD-WM-SARR-038, Rev 1.	Yes, PNNL Letter, from Huckaby to Meacham OT: 073096.	No evidence in non-Watchlist tank, assumed to be No	Unknown or currently undocumented	No, Kummerer, 1995, WHC-SD-WM-SARR-010, Rev 1.	No, SAIC, 1996, WHC-SD-WM-HIE-007, Rev. 0	No, Syphoning PHA, 1996, WHC-SD-WM-TI-759, Rev. 0	No, Bratzel 1996, WHC-SD-WM-TI-725	Assumed Leaker
241-TX-114	Single shell tank	Facility Group 3 GRE - Yes Small Induced Steady State - Yes HNF-SD-WM-BIO-001, App E	No, Meacham, 1996, WHC-SD-WM-SARR-038, Rev 1.	Yes, PNNL Letter, from Huckaby to Meacham OT: 073096.	No evidence in non-Watchlist tank, assumed to be No	Unknown or currently undocumented	No, Kummerer, 1995, WHC-SD-WM-SARR-010, Rev 1.	No, SAIC, 1996, WHC-SD-WM-HIE-007, Rev. 0	No, Syphoning PHA, 1996, WHC-SD-WM-TI-759, Rev. 0	No, Bratzel 1996, WHC-SD-WM-TI-725	Assumed Leaker

Table D3.1-3. TWRS Tank Unique Phenomena. (43 Sheets)

Field Name	Type	Flammable Gas	Ferrocyanide	Organics Separable Phase	TOC in Liquids	TOC in Solids	High Heat	Pyrophorics	Syphoning	Criticality	Corrosivity
241-TX-115	Single shell tank	Facility Group 2 GRE - Yes Small Spontaneous Large Induced Steady State - Yes HNF-SD-WM-BIO-001, App E	No, Meacham, 1996, WHC-SD-WM-SARR-038, Rev 1.	Yes, PNNL Letter, from Huckaby to Meacham OT: 073096.	No evidence in non-Watchlist tank, assumed to be No	Unknown or currently undocumented	No, Kummerer, 1995, WHC-SD-WM-SARR-010, Rev 1.	No, SAIC, 1996, WHC-SD-WM-HIE-007, Rev. 0	No, Syphoning PHA, 1996, WHC-SD-WM-TI-759, Rev. 0	No, Bratzel 1996, WHC-SD-WM-TI-725	Assumed Leaker
241-TX-116	Single shell tank	Facility Group 3 GRE - Yes Small Induced Steady State - Yes HNF-SD-WM-BIO-001, App E	No, Meacham, 1996, WHC-SD-WM-SARR-038, Rev 1.	Yes, PNNL Letter, from Huckaby to Meacham OT: 073096.	No evidence in non-Watchlist tank, assumed to be No	Unknown or currently undocumented	No, Kummerer, 1995, WHC-SD-WM-SARR-010, Rev 1.	No, SAIC, 1996, WHC-SD-WM-HIE-007, Rev. 0	No, Syphoning PHA, 1996, WHC-SD-WM-TI-759, Rev. 0	No, Bratzel 1996, WHC-SD-WM-TI-725	Assumed Leaker
241-TX-117	Single shell tank	Facility Group 3 GRE - Yes Small Induced Steady State - Yes HNF-SD-WM-BIO-001, App E	No, Meacham, 1996, WHC-SD-WM-SARR-038, Rev 1.	Yes, PNNL Letter, from Huckaby to Meacham OT: 073096.	No evidence in non-Watchlist tank, assumed to be No	Unknown or currently undocumented	No, Kummerer, 1995, WHC-SD-WM-SARR-010, Rev 1.	No, SAIC, 1996, WHC-SD-WM-HIE-007, Rev. 0	No, Syphoning PHA, 1996, WHC-SD-WM-TI-759, Rev. 0	No, Bratzel 1996, WHC-SD-WM-TI-725	Assumed Leaker
241-TX-118	Single shell tank	Facility Group 3 GRE - Yes Small Induced Steady State - Yes HNF-SD-WM-BIO-001, App E	No, Meacham, 1996, WHC-SD-WM-SARR-038, Rev 1.	No, PNNL Letter, from Huckaby to Meacham OT: 073096.	No Analysis WL: 1/91	No, Webb, 1996, WHC-SD-WM-SARR-033, Rev 1	No, Kummerer, 1995, WHC-SD-WM-SARR-010, Rev 1.	No, SAIC, 1996, WHC-SD-WM-HIE-007, Rev. 0	No, Syphoning PHA, 1996, WHC-SD-WM-TI-759, Rev. 0	No, Bratzel 1996, WHC-SD-WM-TI-725	Assumed Leaker
TY FARM											
241-TY-101	Single shell tank	Facility Group 3 GRE - Yes Small Induced Steady State - Yes HNF-SD-WM-BIO-001, App E	No, Meacham, 1996, WHC-SD-WM-SARR-038, Rev 1.	No, PNNL Letter, from Huckaby to Meacham OT: 073096.	No evidence in non-Watchlist tank, assumed to be No	No, Webb, 1996, WHC-SD-WM-SARR-033, Rev 1	No, Kummerer, 1995, WHC-SD-WM-SARR-010, Rev 1.	No, SAIC, 1996, WHC-SD-WM-HIE-007, Rev. 0	No, Per, Interview with Kevin Hull	No, Bratzel 1996, WHC-SD-WM-TI-725	Assumed Leaker

Table D3.1-3. TWRS Tank Unique Phenomena. (43 Sheets)

Field Name	Type	Flammable Gas	Ferrocyanide	Organics Separable Phase	TOC in Liquids	TOC in Solids	High Heat	Pyrophorics	Syphoning	Criticality	Corrosivity
241-TY-102	Single shell tank	Facility Group 3 GRE - Yes Small Induced Steady State - Yes HNF-SD-WM-BIO-001, App E	No, Meacham, 1996, WHC-SD-WM-SARR-038, Rev 1.	No, PNNL Letter, from Huckaby to Meacham OT: 073096.	No evidence in non-Watchlist tank, assumed to be No	No, Webb, 1996, WHC-SD-WM-SARR-033, Rev 1	No, Kummerer, 1995, WHC-SD-WM-SARR-010, Rev 1.	No, SAIC, 1996, WHC-SD-WM-HIE-007, Rev. 0	No, Per, Interview with Kevin Hull	No, Bratzel 1996, WHC-SD-WM-TI-725	Yes, Anantatmula 1994 WHC-EP-0772
241-TY-103	Single shell tank	Facility Group 3 GRE - Yes Small Induced Steady State - Yes HNF-SD-WM-BIO-001, App E	No, Meacham, 1996, WHC-SD-WM-SARR-038, Rev 1.	Yes, PNNL Letter, from Huckaby to Meacham OT: 073096.	No evidence in non-Watchlist tank, assumed to be No	No, Webb, 1996, WHC-SD-WM-SARR-033, Rev 1	No, Kummerer, 1995, WHC-SD-WM-SARR-010, Rev 1.	No, SAIC, 1996, WHC-SD-WM-HIE-007, Rev. 0	No, Per, Interview with Kevin Hull	No, Bratzel 1996, WHC-SD-WM-TI-725	Assumed Leaker
241-TY-104	Single shell tank	Facility Group 3 GRE - Yes Small Induced Steady State - Yes HNF-SD-WM-BIO-001, App E	No, Meacham, 1996, WHC-SD-WM-SARR-038, Rev 1.	No, PNNL Letter, from Huckaby to Meacham OT: 073096.	N WHC-SD-WM-DP-101 WL: 5/94	No, Webb, 1996, WHC-SD-WM-SARR-033, Rev 1	No, Kummerer, 1995, WHC-SD-WM-SARR-010, Rev 1.	No, SAIC, 1996, WHC-SD-WM-HIE-007, Rev. 0	No, Per, Interview with Kevin Hull	No, Bratzel 1996, WHC-SD-WM-TI-725	Assumed Leaker
241-TY-105	Single shell tank	Facility Group 3 GRE - Yes Small Induced Steady State - Yes HNF-SD-WM-BIO-001, App E	No, Meacham, 1996, WHC-SD-WM-SARR-038, Rev 1.	Yes, PNNL Letter, from Huckaby to Meacham OT: 073096.	No evidence in non-Watchlist tank, assumed to be No	No, Webb, 1996, WHC-SD-WM-SARR-033, Rev 1	No, Kummerer, 1995, WHC-SD-WM-SARR-010, Rev 1.	No, SAIC, 1996, WHC-SD-WM-HIE-007, Rev. 0	No, Per, Interview with Kevin Hull	No, Bratzel 1996, WHC-SD-WM-TI-725	Assumed Leaker
241-TY-106	Single shell tank	Facility Group 3 GRE - Yes Small Induced Steady State - Yes HNF-SD-WM-BIO-001, App E	No, Meacham, 1996, WHC-SD-WM-SARR-038, Rev 1.	Yes, PNNL Letter, from Huckaby to Meacham OT: 073096.	N WHC-SD-WM-ER-482	No, Webb, 1996, WHC-SD-WM-SARR-033, Rev 1	No, Kummerer, 1995, WHC-SD-WM-SARR-010, Rev 1.	No, SAIC, 1996, WHC-SD-WM-HIE-007, Rev. 0	No, Per, Interview with Kevin Hull	No, Bratzel 1996, WHC-SD-WM-TI-725	Assumed Leaker

Table D3.1-3. TWRS Tank Unique Phenomena. (43 Sheets)

Field Name	Type	Flammable Gas	Ferrocyanide	Organics Separable Phase	TOC in Liquids	TOC in Solids	High Heat	Pyrophorics	Syphoning	Criticality	Corrosivity
U FARM											
241-U-101	Single shell tank	Facility Group 3 GRE - Yes Small Induced Steady State - Yes HNF-SD-WM-BIO-001, App E	No, Meacham, 1996, WHC-SD-WM-SARR-038, Rev 1.	Yes, PNNL Letter, from Huckaby to Meacham OT: 073096.	No evidence in non-Watchlist tank, assumed to be No	Unknown or currently undocumented	No, Kummerer, 1995, WHC-SD-WM-SARR-010, Rev 1.	No, SAIC, 1996, WHC-SD-WM-HIE-007, Rev. 0	No, Syphoning PHA, 1996, WHC-SD-WM-TI-759, Rev. 0	No, Bratzel 1996, WHC-SD-WM-TI-725	Assumed Leaker
241-U-102	Single shell tank	Facility Group 2 GRE - Yes Small Spontaneous Large Induced Steady State - Yes HNF-SD-WM-BIO-001, App E	No, Meacham, 1996, WHC-SD-WM-SARR-038, Rev 1.	Yes, PNNL Letter, from Huckaby to Meacham OT: 073096.	No evidence in non-Watchlist tank, assumed to be No	Unknown or currently undocumented	No, Kummerer, 1995, WHC-SD-WM-SARR-010, Rev 1.	No, SAIC, 1996, WHC-SD-WM-HIE-007, Rev. 0	No, Syphoning PHA, 1996, WHC-SD-WM-TI-759, Rev. 0	No, Bratzel 1996, WHC-SD-WM-TI-725	Yes, Anantatmula 1994 WHC-EP-0772
241-U-103	Single shell tank	Facility Group 2 GRE - Yes Small Spontaneous Large Induced Steady State - Yes HNF-SD-WM-BIO-001, App E	No, Meacham, 1996, WHC-SD-WM-SARR-038, Rev 1.	No, PNNL Letter, from Huckaby to Meacham OT: 073096.	No Analysis WL: 5/94	No, Webb, 1996, WHC-SD-WM-SARR-033, Rev 1	No, Kummerer, 1995, WHC-SD-WM-SARR-010, Rev 1.	No, SAIC, 1996, WHC-SD-WM-HIE-007, Rev. 0	No, Syphoning PHA, 1996, WHC-SD-WM-TI-759, Rev. 0	No, Bratzel 1996, WHC-SD-WM-TI-725	Yes, Anantatmula 1994 WHC-EP-0772
241-U-104	Single shell tank	Facility Group 3 GRE - Yes Small Induced Steady State - Yes HNF-SD-WM-BIO-001, App E	No, Meacham, 1996, WHC-SD-WM-SARR-038, Rev 1.	Yes, PNNL Letter, from Huckaby to Meacham OT: 073096.	No evidence in non-Watchlist tank, assumed to be No	Unknown or currently undocumented	No, Kummerer, 1995, WHC-SD-WM-SARR-010, Rev 1.	No, SAIC, 1996, WHC-SD-WM-HIE-007, Rev. 0	No, Syphoning PHA, 1996, WHC-SD-WM-TI-759, Rev. 0	No, Bratzel 1996, WHC-SD-WM-TI-725	Assumed Leaker

Table D3.1-3. TWRS Tank Unique Phenomena. (43 Sheets)

Field Name	Type	Flammable Gas	Ferrocyanide	Organics Separable Phase	TOC in Liquids	TOC in Solids	High Heat	Pyrophorics	Syphoning	Criticality	Corrosivity
241-U-105	Single shell tank	Facility Group 2 GRE - Yes Small Spontaneous Large Induced Steady State - Yes HNF-SD-WM-BIO-001, App E	No, Meacham, 1996, WHC-SD-WM-SARR-038, Rev 1.	No, PNNL Letter, from Huckaby to Meacham OT: 073096.	No Analysis WL: 5/94	Yes, Webb, 1996, WHC-SD-WM-SARR-033, Rev 1	No, Kummerer, 1995, WHC-SD-WM-SARR-010, Rev 1.	No, SAIC, 1996, WHC-SD-WM-HIE-007, Rev. 0	No, Syphoning PHA, 1996, WHC-SD-WM-TI-759, Rev. 0	No, Bratzel 1996, WHC-SD-WM-TI-725	Yes, Anantatmula 1994 WHC-EP-0772
241-U-106	Single shell tank	Facility Group 2 GRE - Yes Small Spontaneous Large Induced Steady State - Yes HNF-SD-WM-BIO-001, App E	No, Meacham, 1996, WHC-SD-WM-SARR-038, Rev 1.	No, PNNL Letter, from Huckaby to Meacham OT: 073096.	No Analysis WL: 1/91	Unknown or currently undocumented	No, Kummerer, 1995, WHC-SD-WM-SARR-010, Rev 1.	No, SAIC, 1996, WHC-SD-WM-HIE-007, Rev. 0	No, Syphoning PHA, 1996, WHC-SD-WM-TI-759, Rev. 0	No, Bratzel 1996, WHC-SD-WM-TI-725	Yes, Anantatmula 1994 WHC-EP-0772
241-U-107	Single shell tank	Facility Group 2 GRE - Yes Small Spontaneous Large Induced Steady State - Yes HNF-SD-WM-BIO-001, App E	No, Meacham, 1996, WHC-SD-WM-SARR-038, Rev 1.	No, PNNL Letter, from Huckaby to Meacham OT: 073096.	No Analysis WL: 1/91	Unknown or currently undocumented	No, Kummerer, 1995, WHC-SD-WM-SARR-010, Rev 1.	No, SAIC, 1996, WHC-SD-WM-HIE-007, Rev. 0	No, Syphoning PHA, 1996, WHC-SD-WM-TI-759, Rev. 0	No, Bratzel 1996, WHC-SD-WM-TI-725	Yes, Anantatmula 1994 WHC-EP-0772
241-U-108	Single shell tank	Facility Group 2 GRE - Yes Small Spontaneous Large Induced Steady State - Yes HNF-SD-WM-BIO-001, App E	No, Meacham, 1996, WHC-SD-WM-SARR-038, Rev 1.	No, PNNL Letter, from Huckaby to Meacham OT: 073096.	No evidence in non-Watchlist tank, assumed to be No	Unknown or currently undocumented	No, Kummerer, 1995, WHC-SD-WM-SARR-010, Rev 1.	No, SAIC, 1996, WHC-SD-WM-HIE-007, Rev. 0	No, Syphoning PHA, 1996, WHC-SD-WM-TI-759, Rev. 0	No, Bratzel 1996, WHC-SD-WM-TI-725	Yes, Anantatmula 1994 WHC-EP-0772

Table D3.1-3. TWRS Tank Unique Phenomena. (43 Sheets)

Field Name	Type	Flammable Gas	Ferrocyanide	Organics Separable Phase	TOC in Liquids	TOC in Solids	High Heat	Pyrophorics	Syphoning	Criticality	Corrosivity
241-U-109	Single shell tank	Facility Group 2 GRE - Yes Small Spontaneous Large Induced Steady State - Yes HNF-SD-WM-BIO-001, App E	No, Meacham, 1996, WHC-SD-WM-SARR-038, Rev 1.	No, PNNL Letter, from Huckaby to Meacham OT: 073096.	No evidence in non-Watchlist tank, assumed to be No	Unknown or currently undocumented	No, Kummerer, 1995, WHC-SD-WM-SARR-010, Rev 1.	No, SAIC, 1996, WHC-SD-WM-HIE-007, Rev. 0	No, Syphoning PHA, 1996, WHC-SD-WM-TI-759, Rev. 0	No, Bratzel 1996, WHC-SD-WM-TI-725	Yes, Anantatmula 1994 WHC-EP-0772
241-U-110	Single shell tank	Facility Group 3 GRE - Yes Small Induced Steady State - Yes HNF-SD-WM-BIO-001, App E	No, Meacham, 1996, WHC-SD-WM-SARR-038, Rev 1.	Yes, PNNL Letter, from Huckaby to Meacham OT: 073096.	No, WHC-EP-0643	No, Webb, 1996, WHC-SD-WM-SARR-033, Rev 1	No, Kummerer, 1995, WHC-SD-WM-SARR-010, Rev 1.	No, SAIC, 1996, WHC-SD-WM-HIE-007, Rev. 0	No, Syphoning PHA, 1996, WHC-SD-WM-TI-759, Rev. 0	No, Bratzel 1996, WHC-SD-WM-TI-725	Assumed Leaker
241-U-111	Single shell tank	Facility Group 2 GRE - Yes Small Spontaneous Large Induced Steady State - Yes HNF-SD-WM-BIO-001, App E	No, Meacham, 1996, WHC-SD-WM-SARR-038, Rev 1.	No, PNNL Letter, from Huckaby to Meacham OT: 073096.	No, Anal WL: 3/93	No, Webb, 1996, WHC-SD-WM-SARR-033, Rev 1	No, Kummerer, 1995, WHC-SD-WM-SARR-010, Rev 1.	No, SAIC, 1996, WHC-SD-WM-HIE-007, Rev. 0	No, Syphoning PHA, 1996, WHC-SD-WM-TI-759, Rev. 0	No, Bratzel 1996, WHC-SD-WM-TI-725	Yes, Anantatmula 1994 WHC-EP-0772
241-U-112	Single shell tank	Facility Group 3 GRE - Yes Small Induced Steady State - Yes HNF-SD-WM-BIO-001, App E	No, Meacham, 1996, WHC-SD-WM-SARR-038, Rev 1.	Yes, PNNL Letter, from Huckaby to Meacham OT: 073096.	No evidence in non-Watchlist tank, assumed to be No	Unknown or currently undocumented	No, Kummerer, 1995, WHC-SD-WM-SARR-010, Rev 1.	No, SAIC, 1996, WHC-SD-WM-HIE-007, Rev. 0	No, Syphoning PHA, 1996, WHC-SD-WM-TI-759, Rev. 0	No, Bratzel 1996, WHC-SD-WM-TI-725	Assumed Leaker
241-U-201	Single shell tank	Facility Group 3 GRE - Yes Small Induced Steady State - Yes HNF-SD-WM-BIO-001, App E	No, Meacham, 1996, WHC-SD-WM-SARR-038, Rev 1.	Yes, PNNL Letter, from Huckaby to Meacham OT: 073096.	No, WHC-SD-WM-ER-483	No, Webb, 1996, WHC-SD-WM-SARR-033, Rev 1	No, Kummerer, 1995, WHC-SD-WM-SARR-010, Rev 1.	No, SAIC, 1996, WHC-SD-WM-HIE-007, Rev. 0	No, Syphoning PHA, 1996, WHC-SD-WM-TI-759, Rev. 0	No, Bratzel 1996, WHC-SD-WM-TI-725	No, Anantatmula 1994 WHC-EP-0772

Table D3.1-3. TWRS Tank Unique Phenomena. (43 Sheets)

Field Name	Type	Flammable Gas	Ferrocyanide	Organics Separable Phase	TOC in Liquids	TOC in Solids	High Heat	Pyrophorics	Syphoning	Criticality	Corrosivity
241-U-202	Single shell tank	Facility Group 3 GRE - Yes Small Induced Steady State - Yes HNF-SD-WM-BIO-001, App E	No, Meacham, 1996, WHC-SD-WM-SARR-038, Rev 1.	Yes, PNNL Letter, from Huckaby to Meacham OT: 073096.	No, WHC-SD-WM-ER-484	No, Webb, 1996, WHC-SD-WM-SARR-033, Rev 1	No, Kummerer, 1995, WHC-SD-WM-SARR-010, Rev 1.	No, SAIC, 1996, WHC-SD-WM-HIE-007, Rev. 0	No, Syphoning PHA, 1996, WHC-SD-WM-TI-759, Rev. 0	No, Bratzel 1996, WHC-SD-WM-TI-725	No, Anantatmula 1994 WHC-EP-0772
241-U-203	Single shell tank	Facility Group 3 GRE - Yes Small Induced Steady State - Yes HNF-SD-WM-BIO-001, App E	No, Meacham, 1996, WHC-SD-WM-SARR-038, Rev 1.	No, PNNL Letter, from Huckaby to Meacham OT: 073096.	No, WHC-SD-WM-ER-485	No, Webb, 1996, WHC-SD-WM-SARR-033, Rev 1	No, Kummerer, 1995, WHC-SD-WM-SARR-010, Rev 1.	No, SAIC, 1996, WHC-SD-WM-HIE-007, Rev. 0	No, Syphoning PHA, 1996, WHC-SD-WM-TI-759, Rev. 0	No, Bratzel 1996, WHC-SD-WM-TI-725	No, Anantatmula 1994 WHC-EP-0772
241-U-204	Single shell tank	Facility Group 3 GRE - Yes Small Induced Steady State - Yes HNF-SD-WM-BIO-001, App E	No, Meacham, 1996, WHC-SD-WM-SARR-038, Rev 1.	No, PNNL Letter, from Huckaby to Meacham OT: 073096.	No, WHC-SD-WM-ER-486	No, Webb, 1996, WHC-SD-WM-SARR-033, Rev 1	No, Kummerer, 1995, WHC-SD-WM-SARR-010, Rev 1.	No, SAIC, 1996, WHC-SD-WM-HIE-007, Rev. 0	No, Syphoning PHA, 1996, WHC-SD-WM-TI-759, Rev. 0	No, Bratzel 1996, WHC-SD-WM-TI-725	No, Anantatmula 1994 WHC-EP-0772
MISCELLANEOUS											
244-A	DCRT	Facility Group Non-GRE GRE - No Steady State - Yes HNF-SD-WM-BIO-001, App E	No, Meacham, 1996, WHC-SD-WM-SARR-038, Rev 1.	Yes, PNNL Letter, from Huckaby to Meacham OT: 073096.	Unknown or currently undocumented	Unknown or currently undocumented	Unknown or currently undocumented	No, SAIC, 1996, WHC-SD-WM-HIE-007, Rev. 0	No, Syphoning PHA, 1996, WHC-SD-WM-TI-759, Rev. 0	No, Bratzel 1996, WHC-SD-WM-TI-725	Unknown or currently undocumented
244-BX	DCRT	Facility Group Non-GRE GRE - No Steady State - Yes HNF-SD-WM-BIO-001, App E	No, Meacham, 1996, WHC-SD-WM-SARR-038, Rev 1.	Yes, PNNL Letter, from Huckaby to Meacham OT: 073096.	Unknown or currently undocumented	Unknown or currently undocumented	Unknown or currently undocumented	No, SAIC, 1996, WHC-SD-WM-HIE-007, Rev. 0	No, Syphoning PHA, 1996, WHC-SD-WM-TI-759, Rev. 0	No, Bratzel 1996, WHC-SD-WM-TI-725	Unknown or currently undocumented

Table D3.1-3. TWRS Tank Unique Phenomena. (43 Sheets)

Field Name	Type	Flammable Gas	Ferrocyanide	Organics Separable Phase	TOC in Liquids	TOC in Solids	High Heat	Pyrophorics	Syphoning	Criticality	Corrosivity
244-CR	Vault	TK-CR-001, 002, 003 FG 3 GRE - Yes Small Induced SS- Yes TK-011 GRE - No SS - Yes HNF-SD-WM-BIO-001, App E	No, Meacham, 1996, WHC-SD-WM-SARR-038, Rev 1.	Yes, PNNL Letter, from Huckaby to Meacham OT: 073096.	Unknown or currently undocumented	Unknown or currently undocumented	Unknown or currently undocumented	No, SAIC, 1996, WHC-SD-WM-HIE-007, Rev. 0	No, Syphoning PHA, 1996, WHC-SD-WM-TI-759, Rev. 0	No, Bratzel 1996, WHC-SD-WM-TI-725	Unknown or currently undocumented
244-S	DCRT	Facility Group Non-GRE GRE - No Steady State - Yes HNF-SD-WM-BIO-001, App E	No, Meacham, 1996, WHC-SD-WM-SARR-038, Rev 1.	Yes, PNNL Letter, from Huckaby to Meacham OT: 073096.	Unknown or currently undocumented	Unknown or currently undocumented	Unknown or currently undocumented	No, SAIC, 1996, WHC-SD-WM-HIE-007, Rev. 0	Yes, Could overflow due to syphoning form 102-SY, Syphoning PHA, 1996, WHC-SD-WM-TI-759, Rev. 0	No, Bratzel 1996, WHC-SD-WM-TI-725	Unknown or currently undocumented
244-TX	DCRT	Facility Group Non-GRE GRE - No Steady State - Yes HNF-SD-WM-BIO-001, App E	No, Meacham, 1996, WHC-SD-WM-SARR-038, Rev 1.	Yes, PNNL Letter, from Huckaby to Meacham OT: 073096.	Unknown or currently undocumented	Unknown or currently undocumented	Unknown or currently undocumented	No, SAIC, 1996, WHC-SD-WM-HIE-007, Rev. 0	No, Per, Interview with Kevin Hull	No, Bratzel 1996, WHC-SD-WM-TI-725	Unknown or currently undocumented
244-U	DCRT	Facility Group Non-GRE GRE - No Steady State - Yes HNF-SD-WM-BIO-001, App E	No, Meacham, 1996, WHC-SD-WM-SARR-038, Rev 1.	Yes, PNNL Letter, from Huckaby to Meacham OT: 073096.	NA	NA	Unknown or currently undocumented	No, SAIC, 1996, WHC-SD-WM-HIE-007, Rev. 0	No, Syphoning PHA, 1996, WHC-SD-WM-TI-759, Rev. 0	No, Bratzel 1996, WHC-SD-WM-TI-725	Unknown or currently undocumented

Edrington, R.S., 1991, BY and C Tank Farm Supernate Sample Analysis [Revision of 16220-PCL90-117] (internal memo 28110-PCL91-048 to R.K. Tranbarger, June 3), Westinghouse Hanford Company, Richland, Washington.

Esch, R.A., 1995, Results for 241-BY-105 Grab Samples (internal memo 8E480-95-020 to J.M. Jones, April 6), Westinghouse Hanford Company, Richland, Washington.

Hodgson, K.M., 1995, Sampling of Waste in 241-A-105 (internal memo 7A430-95-018 to N.W. Kirch, August 28), Westinghouse Hanford Company, Richland, Washington.

Huckaby, J. L., 1996, Technical Basis for Orgscrn Spreadsheet (PNNL Letter OT:073096 to J.E. Meacham, Westinghouse Hanford Company, July 30), Pacific Northwest National Laboratory, Richland, Washington.

PNL-10099, 1994, Tank Characterization Report for Single-Shell Tank B-111, Rev. 0, Pacific Northwest Laboratory, Richland, Washington.

PNL-10101, 1994, Tank Characterization Report for Single-Shell Tank T-102, Rev. 0, Pacific Northwest Laboratory, Richland, Washington.

Rollison, M.D., 1995, Results for 241-BX-106 Grab Samples (internal memo 8E480-95-018 to J.M. Jones, April 4), Westinghouse Hanford Company, Richland, Washington.

Sutey, M.J., 1993, Waste Compatibility Assessment of Tank 241-AN-101 with Tanks 241-BX-110 and 241-BX-111, (internal memo 7C242-93-029 to S.D. Godfrey, August 3), Westinghouse

Weiss, R.L., 1988, Analysis of Tank 241-SX-104 Samples (internal memo 12221-PCL88-147, Rev. 1, to K.G. Carothers, August 15), Westinghouse Hanford Company, Richland, Washington.

Weiss, R.L., 1990, Analysis of Liquid Sample from Tank 241-SX-101 (internal memo 17212-PCL90-043 to V.C. Boyles, February 22), Westinghouse Hanford Company, Richland, Washington.

WHC-EP-0643, 1993, Tank Characterization Report for Single-Shell Tank 241-U-110, Rev. 0, Westinghouse Hanford Company, Richland, Washington.

WHC-EP-0739, 1994, Tank Characterization Report for Single-Shell Tank 241-BX-107, Rev. 0, Westinghouse Hanford Company, Richland, Washington.

WHC-EP-0772, 1994, Characterization of the Corrosion Behavior of the Carbon Steel Liner in Hanford Site Single Shell Tanks, Westinghouse Hanford Company, Richland, Washington.

WHC-SD-WM-DP-099, 1995, Final Report for Tank 241-C-103, Push Mode Sample Cores 63 and 66, Rev. 1, Westinghouse Hanford Company, Richland, Washington.

WHC-SD-WM-DP-101, 1995, 216-Day Safety Screen Results and Final Report for Tank 241-TY-104, Auger Samples 95-AUG-008 and 95-AUG-009, Rev. 0-A, Westinghouse Hanford Company, Richland, Washington.

WHC-SD-WM-DP-103, 1996, Final Report for Tank 241-BY-106, Push Mode Sample Cores 64, 65, and 121, Rev. 0A, Westinghouse Hanford Company, Richland, Washington.

WHC-SD-WM-DP-104, 1995, Final Report for Tank 241-BY-104, Auger Sample 95-AUG-012 and 95-AUG-013, Rev. 1, Westinghouse Hanford Company, Richland, Washington.

WHC-SD-WM-DP-135, 1995, 45-Day Safety Screening Results for Tank 241-BX-103, Push Mode, Cores 86 and 87, Rev. 0, Westinghouse Hanford Company, Richland, Washington.

WHC-SD-WM-DP-136, 1995, 45-Day Safety Screening Results and Final Report for Tank 241-A-102, Auger Sample 95-AUG-033, Rev. 0, Westinghouse Hanford Company, Richland, Washington.

WHC-SD-WM-DP-137, 1995, 45-Day Safety Screening Results for Tank 241-B-104, Push Mode, Cores 88 and 89, Rev. 0, Westinghouse Hanford Company, Richland, Washington.

WHC-SD-WM-DP-139, 1995, 45-Day Safety Screening Results for Tank 241-B-101, Push Mode, Cores 90 and 91, Rev. 0, Westinghouse Hanford Company, Richland, Washington.

WHC-SD-WM-DP-140, 1995, 45-Day Safety Screening Results for Tank 241-B-106, Push Mode, Cores 93 and 94, Rev. 0, Westinghouse Hanford Company, Richland, Washington.

WHC-SD-WM-DP-141, 1995, 90-Day Safety Screening Results and Final Report for Tank 241-T-108, Auger Samples 95-AUG-035 and 95-AUG-037, Rev. 1, Westinghouse Hanford Company, Richland, Washington.

WHC-SD-WM-DP-143, 1995, 90-Day Safety Screening Results and Final Report for Tank 241-T-106, Auger Samples 95-AUG-038 and 95-AUG-039, Rev. 1, Westinghouse Hanford Company, Richland, Washington.

WHC-SD-WM-DP-153, 1996, Final Report for Tank 241-BY-110, Rotary Mode Cores 92, 95, 101,103, 106, 107, 109, 96 & 113, Rev. 1, Westinghouse Hanford Company, Richland, Washington.

WHC-SD-WM-DP-156, 1996, Final Report for Tank 241-S-107, Push Mode Cores 105, 110 and 111, Rev. 1, Westinghouse Hanford Company, Richland, Washington.

WHC-SD-WM-DP-160, 1995, 45-Day Safety Screening Results for Tank 241-B-204, Push Mode Cores 112 and 114, Rev. 0, Westinghouse Hanford Company, Richland, Washington.

WHC-SD-WM-DP-165, 1996, 45-Day Safety Screening Results for Tank 241-AN-102, Grab Samples 2AN-95-1 Through 2AN-95-6 and 102-AN-1 through 102-AN-4, Rev. 0, Westinghouse Hanford Company, Richland, Washington.

WHC-SD-WM-DP-169, 1996, 45-Day Safety Screening Results for Tank 241-B-203, Push Mode Cores 115, 120 and 122, Rev. 0, Westinghouse Hanford Company, Richland, Washington.

WHC-SD-WM-DP-171, 1996, Final Report for Tank 241-BX-104, Push Mode Cores 126 and 127, Rev. 1, Westinghouse Hanford Company, Richland, Washington.

WHC-SD-WM-ER-350, 1995, Historical Tank Content Estimate for the Southeast Quadrant of the Hanford 200 Areas, Rev. 0, ICF Kaiser Hanford Company, Richland, Washington.

WHC-SD-WM-ER-366, 1995, Tank Characterization Report for Double-Shell Tank 241-SY-102, Rev. 0, Westinghouse Hanford Company, Richland, Washington.

WHC-SD-WM-ER-367, 1994, Tank Characterization Report for Single-Shell Tank 241C110, Rev. 0, Westinghouse Hanford Company, Richland, Washington.

WHC-SD-WM-ER-369, 1994, Tank Characterization Report for Single-Shell Tank 241-T-105, Rev. 0, Westinghouse Hanford Company, Richland, Washington.

WHC-SD-WM-ER-370, 1994, Tank Characterization Report for Single Shell Tank 241-S-104, Rev. 0, Westinghouse Hanford Company, Richland, Washington.

WHC-SD-WM-ER-372, 1994, Tank Characterization Report for Single-Shell Tank 241-T-104, Rev. 0, Westinghouse Hanford Company, Richland, Washington.

WHC-SD-WM-ER-382, 1994, Tank Characterization Report for Single-Shell Tank 241-T-107, Rev. 0, Westinghouse Hanford Company, Richland, Washington.

WHC-SD-WM-ER-402, 1995, Tank Characterization Report for Single-Shell Tank 241-C-109, Rev. 0, Westinghouse Hanford Company, Richland, Washington.

WHC-SD-WM-ER-405, 1995, Tank Characterization Report for Single-Shell Tank 241-B-102, Rev 0, Westinghouse Hanford Company, Richland, Washington.

WHC-SD-WM-ER-406, 1995, Tank Characterization Report for Single-Shell Tank 241-BX-105, Rev. 0, Westinghouse Hanford Company, Richland, Washington.

WHC-SD-WM-ER-408, 1995, Tank Characterization Report for Single-Shell Tank 241-BX-101, Rev. 0, Westinghouse Hanford Company, Richland, Washington.

WHC-SD-WM-ER-474, 1995, Tank Characterization Report for Single-Shell Tank 241-C-107, Rev. 0, Westinghouse Hanford Company, Richland, Washington.

WHC-SD-WM-ER-475, 1995, Tank Characterization Report for Single-Shell Tank 241-C-111, Rev. 0, Westinghouse Hanford Company, Richland, Washington.

WHC-SD-WM-ER-482, 1995, Tank Characterization Report for Single-Shell Tank 241-TY-106, Rev. 0, Westinghouse Hanford Company, Richland, Washington.

WHC-SD-WM-ER-483, 1995, Tank Characterization Report for Single-Shell Tank 241-U-201, Rev. 0, Westinghouse Hanford Company, Richland, Washington.

WHC-SD-WM-ER-484, 1995, Tank Characterization Report for Single-Shell Tank 241-U-202, Rev. 0, Westinghouse Hanford Company, Richland, Washington.

WHC-SD-WM-ER-485, 1995, Tank Characterization Report for Single-Shell Tank 241-U-203, Rev. 0, Westinghouse Hanford Company, Richland, Washington.

WHC-SD-WM-ER-496, 1995, Tank Characterization Report for Single-Shell Tank 241-U-204, Rev. 0, Westinghouse Hanford Company, Richland, Washington.

WHC-SD-WM-ER-533, 1996, Tank Characterization Report for Single-Shell Tank 241-BY-108, Rev. 0, Westinghouse Hanford Company, Richland, Washington.

WHC-SD-WM-ER-540, 1996, Tank 241-T-111 Characterization Report, Rev. 0, Westinghouse Hanford Company, Richland, Washington.

WHC-SD-WM-HIE-007, 1996, Tank Waste Remediation System FSAR Hazards Identification/Facility Configuration Verification Report, Rev. 0, Westinghouse Hanford Company, Richland, Washington.

WHC-SD-WM-SARR-010, 1995, Heat Removal Characteristics of Waste Storage Tanks, Rev. 1, Westinghouse Hanford Company, Richland, Washington.

WHC-SD-WM-SARR-033, 1996, Safety Criteria for Organic Watch List Tanks at the Hanford Site, Rev. 1, Westinghouse Hanford Company, Richland, Washington.

WHC-SD-WM-SARR-038, 1996, Assessment of the Potential for Ferrocyanide Propagating Reaction Accidents, Rev. 1, Westinghouse Hanford Company, Richland, Washington.

WHC-SD-WM-TI-725, 1996, Tank Farm Nuclear Criticality Review, Rev. 0, Westinghouse Hanford Company, Richland, Washington.

WHC-SD-WM-TI-759, 1996, Hazard Evaluation for the Tank Waste Remediation System Final Safety Analysis Report, Rev. 0, Westinghouse Hanford Company, Richland, Washington.

This page intentionally left blank.

This document was too large to scan as a single document; therefore, it has been divided into smaller sections.

Section 5 of 10

Document Information			
Document #	SD-WM-BIO-001	**Revision**	1
Title	TWRS BASIS FOR INTERIM OPERATION		
Date	10/28/1998		
Originator	Y.G. NOORANI	**Originator Co.**	FDH
Recipient		**Recipient Co.**	
References	ECN-644566		
Keywords	AUTHORIZATION BASIS		
Projects	BIO,TWRS,TFARM,W-320		
Other Information	THIS SECTION CONTAINS APPENDIX D TABLE D3.1-4-A THRU TABLE D3.4-5 OF VOLUME 3		

Table D3.1-4-A. TWRS Facility Hazard Identification. (4 sheets)

Facility 241-A-Tank Farm	Type	A-Corrosive	B-Explosive/ Pyrophoric	C-Nuclear Criticality	D-Flammable Materials	E-Thermal Radiation	F-Chem. Rxtns.	G-Friction	H-Electrical	I-Kinetic-Rotation	J-Kinetic-Linear	K-Mass, Gravity, Height	L-Pressure-Volume	M-Thermal (except radiant)	Comments
Legend Boxes -->		Select applicable hazards from attached table and place corresponding hazard numbers in the boxes below.													Notes
A TANK FARM		NA	NA	NA	NA	NA	NA	5 (c)	6 (b)	2, 3 (b)	NA	11 (c)	NA	NA	NA
241-A-101	SST	2 (b)	6,7,8 (a)	15 (b)	11,13,14 (a)	NA	NA	NA	4 (c)	NA	NA	NA	NA	NA	A-101 is a watchlist tank (hydrogen/ flammable gas, organics). (a)
241-A-102	SST	2 (b)	6,7,8 (a)	15 (b)	11,14 (c)	NA	NA	NA	4 (c)	NA	NA	NA	NA	NA	NA
241-A-103	SST	2 (b)	6,7,8 (a)	15 (b)	11,14 (c)	NA	NA	NA	4 (c)	NA	NA	NA	NA	NA	Recommended to be added as a watchlist tank (hydrogen/ flammable gas). (a)
241-A-104	SST	2 (b)	6,7,8 (a)	15 (b)	11,14 (c)	NA	NA	NA	4 (c)	NA	NA	NA	NA	NA	NA
241-A-105	SST	2 (b)	6,7,8 (a)	15 (b)	11,14 (c)	NA	NA	NA	4 (c)	NA	NA	NA	NA	NA	NA
241-A-106	SST	2 (b)	6,7,8 (a)	15 (b)	11,14 (c)	NA	NA	NA	4 (c)	NA	NA	NA	NA	NA	NA
241-A-151	Diversion box (outside farm)	NA	NA	NA	NA	NA	NA	NA	NA	NA	NA	NA	NA	NA	NA
241-A-152	Diversion box	NA	NA	NA	NA	NA	NA	NA	NA	NA	NA	NA	NA	NA	NA
241-A-COBs	Cleanout boxes (11)	2 (b)	6,7,8 (a)	NA	NA	NA	NA	NA	4 (d)	NA	NA	NA	NA	NA	NA
241-A-501	Water sluicing bldg	NA	NA	NA	NA	NA	NA	NA	4 (c)	NA	NA	2,10 (c)	NA	3 (c)	NA
241-A-701	Compressor building (outside fence)	NA	NA	NA	4,5 (c)	NA	NA	1,2,3,5 (c)	1,2,4,5,9 ,10,16 (c)	2,3,4 (c)	6 (c)	10,13 (c)	6 (c)	6 (c)	Outside of building: underground fuel storage tank, and inst. air receiver
241-A-101	Pump pit B (6)(1)	NA	NA	NA	NA	NA	NA	NA	4 (d)	NA	NA	NA	NA	NA	(1) Pits are inactive and weather enclosed with polyurethane foam.
241-A-101(3), 105(2), 106(1)	Sluice pits (1)	NA	NA	NA	NA	NA	NA	NA	4 (d)	NA	NA	NA	NA	NA	NA

Table D3.1-4-A. TWRS Facility Hazard Identification. (4 sheets)

Facility 241-A-Tank Farm	Type	A-Corrosive	B-Explosive/ Pyrophoric	C-Nuclear Criticality	D-Flammable Materials	E-Thermal Radiation	F-Chem. Rxtns.	G-Friction	H-Electrical	I-Kinetic-Rotation	J-Kinetic-Linear	K-Mass, Gravity, Height	L-Pressure-Volume	M-Thermal (except radiant)	Comments
Legend Boxes -->	Select applicable hazards from attached table and place corresponding hazard numbers in the boxes below.														Notes
241-A-01H	Distributor pit(1)	NA	NA	NA	NA	NA	NA	NA	4(d)(2)	NA	NA	NA	NA	NA	(2) Pit leak detector not in service
241-A-401	Condenser bldg	NA	NA	NA	NA	NA	NA	NA	4 (c)	NA	NA	NA	NA	NA	Bldg. covered with taped covers, with penetrations in covers. Tumbleweed buildup on North side of building. This building is secured and controlled. No hazards are assumed to exist.
241-A-401	Diverter Caisson	NA	NA	NA	NA	NA	NA	NA	4 (d)	NA	NA	NA	NA	NA	NA
241-A-702	Ventilation facility	NA	NA	NA	NA	NA	NA	1,2,3,5 (c)	4,10, 11,16 (c)	2,4 (c)	NA	NA	NA	NA	NA
241-A-271	Control room	NA	NA	NA	NA	NA	NA	3,5 (c)	4,5,10(3) (c)	2,4 (c)	NA	10 (c)	NA	NA	(3) 2 Substations outside of control room
241-A-350	Drainage lift station & catch tank	NA	NA	NA	NA	NA	NA	5 (c)	4,9,10 (c)	2,3 (c)	NA	11 (c)	NA	NA	NA
	ALC flush buildings (3)	NA	NA	NA	NA	NA	NA	NA	NA	NA	NA	NA	NA	NA	NA
	Leak detection lateral for tanks 103,105,106	NA	NA	NA	NA	NA	NA	NA	4 (c)	NA	NA	NA	NA	NA	NA
241-A-A&B	Valve pits	NA	NA	NA	NA	NA	NA	NA	4 (c)	NA	5(4)(c)	NA	NA	3(5)(c)	(4) Crane parked next to valve pit (5) Heat traces in pit
	Old portable exhauster near 105-A	NA	NA	NA	NA	NA	NA	1,3,5 (c)	4,10 (c)	2,4 (c)	NA	NA	NA	NA	NA

Table D3.1-4-A. TWRS Facility Hazard Identification. (4 sheets)

Facility 241-A-Tank Farm	Type	A-Corrosive	B-Explosive/ Pyrophoric	C-Nuclear Criticality	D-Flammable Materials	E-Thermal Radiation	F-Chem. Rxtns.	G-Friction	H-Electrical	I-Kinetic-Rotation	J-Kinetic-Linear	K-Mass, Gravity, Height	L-Pressure-Volume	M-Thermal (except radiant)	Comments
Legend Boxes -->		Select applicable hazards from attached table and place corresponding hazard numbers in the boxes below.													Notes
241-A-831	Old Ventilation stack bldg	NA	NA	NA	NA	NA	NA	NA	NA	NA	NA	NA	NA	NA	241-A-831 bldg inactive.
241-A-CT-400	Cooling towers (outside fence)	NA	NA	NA	NA	NA	NA	NA	4 (c)	NA	NA	NA	NA	NA	NA
	Pump station for cooling towers	NA	NA	NA	NA	NA	NA	5 (c)	4,9,10 (c)	2,3 (c)	NA	10 (c)	NA	NA	
	"Lift" station pumping station	NA	NA	NA	NA	NA	NA	5 (c)	4,9,10 (c)	2,3 (c)	NA	NA	NA	NA	NA
	Hazardous storage shed (outside fence)	NA	NA	NA	17(7)(c)	NA	NA	3,5 (c)	4,10 (c)	2,4 (c)	NA	NA	NA	NA	(7) Sign indicated flammable materials, did not open shed to verify
A-08,F-561	Raw water valve pit, valve pit, crib sampling station	NA	NA	NA	NA	NA	NA	NA	4 (c)	NA	NA	10 (c)	NA	NA	NA
	Old ion exchanger	NA	NA	NA	NA	NA	NA	NA	NA	NA	NA	NA	NA	NA	Inactive
216-A-28	Crib	NA	NA	NA	NA	NA	NA	NA	NA	NA	NA	NA	NA	NA	NA
216-A-30	Crib	NA	NA	NA	NA	NA	NA	NA	NA	NA	NA	NA	NA	NA	NA
216-A-36A	Crib	NA	NA	NA	NA	NA	NA	NA	NA	NA	NA	NA	NA	NA	NA
216-A-36B	Crib	NA	NA	NA	NA	NA	NA	NA	NA	NA	NA	NA	NA	NA	NA
216-A-37-1	Crib	NA	NA	NA	NA	NA	NA	NA	NA	NA	NA	NA	NA	NA	NA
216-A-45	Crib	NA	NA	NA	NA	NA	NA	NA	NA	NA	NA	NA	NA	NA	NA
A-417	Catch tank	2 (8)	NA	15 (b)	NA	NA	NA	NA	NA	NA	NA	NA	NA	NA	(8) Assume potentially the same as tank waste.(c)

Table D3.1-4-A. TWRS Facility Hazard Identification. (4 sheets)

Facility 241-A-Tank Farm	Type	A-Corrosive	B-Explosive/ Pyrophoric	C-Nuclear Criticality	D-Flammable Materials	E-Thermal Radiation	F-Chem. Rxtns.	G-Friction	H-Electrical	I-Kinetic-Rotation	J-Kinetic-Linear	K-Mass, Gravity, Height	L-Pressure-Volume	M-Thermal (except radiant)	Comments
Legend Boxes -->		Select applicable hazards from attached table and place corresponding hazard numbers in the boxes below.													Notes
244-A	Lift station (DCRT)	2 (b)	NA	NA	NA	NA	NA	NA	4 (c)	NA	NA	NA	NA	NA	NA
241-A-153	Diversion box	2 (b)	NA	NA	NA	NA	NA	NA	4 (c)	NA	NA	NA	NA	NA	NA
241-A-302A	Catch tank	2 (b)	NA	15 (b)	NA	NA	NA	NA	NA	NA	NA	NA	NA	NA	NA
241-A-302B	Catch tank	2 (b)	NA	15 (b)	NA	NA	NA	NA	NA	NA	NA	NA	NA	NA	NA
241-A-501	Valve pit	2 (b)	NA	NA	NA	NA	NA	NA	NA	NA	NA	NA	NA	NA	NA
F-562	Valve pit	2 (b)	NA	NA	NA	NA	NA	NA	NA	NA	NA	NA	NA	NA	NA
AX-80	Service pit	2 (b)	NA	NA	NA	NA	NA	NA	NA	NA	NA	NA	NA	NA	NA
F-505	Diverter caisson	2 (b)	NA	NA	NA	NA	NA	NA	NA	NA	NA	NA	NA	NA	NA
AX-152	Valve pit	2 (b)	NA	NA	NA	NA	NA	NA	NA	NA	NA	NA	NA	NA	NA
241-A-431	Ventilation building	(9)	NA	NA	NA	NA	NA	NA	NA	NA	NA	NA	NA	NA	(9) Did not look into this building, it is locked up and inactive(c)
	Fuel storage tank	(10)	NA	NA	NA	NA	NA	NA	NA	NA	NA	NA	NA	NA	(10) Contents and serviceability of this tank unknown.(c)

(a) OSD-T-151-00030, 1996, Operating Specifications for Watch List Tanks, Rev. B-17, Westinghouse Hanford Company, Richland, Washington.
(b) Cognizant Engineer: Randy L. Powers
(c) Field Walkdown, 4/16/96, Charlotte Zaccone, Randy L. Powers, Matt Tiffany, Dave Aquilina, Suzanne Lindberg, David A. Bragg
(d) Cognizant Engineer: Joe Jones

Table D3.1-4-AN. TWRS Facility Hazard Identification. (3 sheets)

Facility	Type	A- Corrosive	B- Explosive/ Pyrophoric	C- Nuclear Criticality	D-Flammable Materials	E- Thermal Radiation	F- Chem. Rxtns.	G- Friction	H- Electrical	I- Kinetic- Rotation	J- Kinetic- Linear	K- Mass, Gravity, Height	L- Pressure- Volume	M- Thermal (except radiant)	Comments
Legend Boxes -->		Select applicable hazards from attached table and place corresponding hazard numbers in the boxes below.													Notes
AN TANK FARM		NA	NA	NA	NA	NA	NA	5 (c)	6 (b)	2, 3 (b)	NA	11 (c)	NA	NA	NA
241-AN-101	DST	2 (b)	6,7,8 (b)	15 (b)	11(b)(1)	NA	NA	2(b)(3), 3(d)(b)	4,6,9,10, 14 (b)	3 (b)	(c)(b)	11,15(b)(c)	NA	NA	(1) Hydrogen not above LFL
241-AN-102	DST	2 (b)	6,7,8 (b)	15 (b)	11(b)(1)	NA	NA	2(b)(3), 5,(b) 3(d)(b)	4,6,9,10, 14 (b)	3 (b)	(c)(b)	11,15(b)(c)	NA	NA	(2) Ammonia (3) Pump bearings
241-AN-103	DST	2 (b)	6,7,8 (b)	15 (b)	11(b)(1), 14(a)(2)	NA	NA	2(b)(3), 3(d)(b), 7(5)(b)	4,6,9, 10,14 (b),10(6)	2,3 (b)	(c)(b)	11,15(b)(c)	NA	NA	AN-103 is a watchlist tank (hydrogen/ flammable gas). (a) (4) Mixer pump motor (caustic addition)
241-AN-104	DST	2 (b)	6,7,8 (b)	15 (b)	11(b)(1), 14(a)(2)	NA	NA	2(b)(3), 3(d)(b), 7(5)(b)	4,6,9, 10,14 (b),10(6)	2,3 (b)	(c)(b)	11,15(b)(c)	NA	NA	AN-104 is a watch list tank (hydrogen/ flammable gas) . (a) (5) Sealed camera units in the dome space (6) Camera motor
241-AN-105	DST	2 (b)	6,7,8 (b)	15 (b)	11(b)(1), 14(a)(2)	NA	NA	2(b)(3), 3(d)(b), 7(5)(b)	4,6,9, 10,14 (b),10(6)	2,3 (b)	(c)(b)	11,15(b)(c)	NA	NA	AN-105 is a watch list tank (hydrogen/ flammable gas). (a) (7) Mixer pump motor
241-AN-106	DST	2 (b),4 (b)	6,7,8 (b)	15 (b)	11(b)(1)	NA	NA	2(b)(3), 3(d)(b)	4,6,9, 10,14 (b)	3 (b)	(c)(b)	11,15(b)(c)	NA	NA	NA
241-AN-107	DST	2 (b)	6,7,8 (b)	15 (b)	11(b)(1), 14(a)(2)	NA	NA	2(b)(3), 3(d)(b), 7(5)(b)	4,6,9, 10,14 (b),10(6)	2,3 (b)	(c)(b)	11,15(b)(c)	NA	NA	NA
COB-AN-1	Cleanout box	2 (b)	6,7,8 (b)	NA	NA	NA	NA	NA	4 (b)	NA	NA	NA	NA	NA	NA
COB-AN-2	Cleanout box	2 (b)	6,7,8 (b)	NA	NA	NA	NA	NA	4 (b)	NA	NA	NA	NA	NA	NA
COB-AN-3	Cleanout box	2 (b)	6,7,8 (b)	NA	NA	NA	NA	NA	4 (b)	NA	NA	NA	NA	NA	NA
COB-AN-4	Cleanout box	2 (b)	6,7,8 (b)	NA	NA	NA	NA	NA	4 (b)	NA	NA	NA	NA	NA	NA
COB-AN-5	Cleanout box	2 (b)	6,7,8 (b)	NA	NA	NA	NA	NA	4 (b)	NA	NA	NA	NA	NA	NA
COB-AN-6	Cleanout box	2 (b)	6,7,8 (b)	NA	NA	NA	NA	NA	4 (b)	NA	NA	NA	NA	NA	NA

Table D3.1-4-AN. TWRS Facility Hazard Identification. (3 sheets)

Facility	Type	A- Corrosive	B- Explosive/ Pyrophoric	C- Nuclear Criticality	D-Flammable Materials	E- Thermal Radiation	F- Chem. Rxtns.	G- Friction	H- Electrical	I- Kinetic- Rotation	J- Kinetic- Linear	K- Mass, Gravity, Height	L- Pressure- Volume	M- Thermal (except radiant)	Comments
Legend Boxes -->		Select applicable hazards from attached table and place corresponding hazard numbers in the boxes below.													Notes
COB-AN-7	Cleanout box	2 (b)	6,7,8 (b)	NA	NA	NA	NA	NA	4 (b)	NA	NA	NA	NA	NA	NA
COB-AN-8	Cleanout box	2 (b)	6,7,8 (b)	NA	NA	NA	NA	NA	4 (b)	NA	NA	NA	NA	NA	NA
COB-AN-9	Cleanout box	2 (b)	6,7,8 (b)	NA	NA	NA	NA	NA	4 (b)	NA	NA	NA	NA	NA	NA
241-AN-273	Compressor building	NA	NA	NA	NA	NA	NA	1,2,3, 5 (b)	4,7,8,9,10,11, 14 (b)	2,3,4 (b)	5 (b)	7,13 (b)	2,6 (b)	1,3 (b)	NA
241-AN-01D	Condensate receiver pit	NA	NA	NA	NA	NA	NA	NA	4 (b)	NA	5 (b)	3 (b)	NA	NA	NA
241-AN	Flush pit	NA	NA	NA	NA	NA	NA	NA	4 (b)	NA	NA	NA	NA	NA	NA
241-AN-271	Instrument building	NA	NA	NA	NA	NA	NA	2,3,5 (b)	3,4,5, 6,7,8, 11,14, 16(8)(b)	2,4 (b)	NA	NA	NA	3 (b)	(8) 480 V. considered high voltage
	Service pit	NA	NA	NA	NA	NA	NA	NA	4 (b)	NA	NA	10 (b)	NA	3 (b)	NA
241-AN-A	Valve pit	NA	NA	NA	NA	NA	NA	NA	4 (b)	NA	5 (b)	3,10 (b)	NA	NA	NA
241-AN-B	Valve pit	NA	NA	NA	NA	NA	NA	NA	4 (b)	NA	5 (b)	3,10 (b)	NA	NA	NA
	Satellite accumulation area	1, 2, 4	NA	NA	2, 10, 17(tank contact wastes)	NA	NA	NA	NA	NA	NA	NA	NA	NA	NA
	Annulus pits (7)	NA	NA	NA	NA	NA	NA	2,5 (b)	4 (b)	2,3 (b)	5 (b)	3 (b)	NA	NA	NA
	Leak detector pits (7)	NA	NA	NA	NA	NA	NA	2,5 (b)	4 (b)	2,3 (b)	5 (b)	3 (b)	NA	NA	NA
	Central pump pits (7)	NA	NA	NA	NA	NA	NA	2,5 (b)	4 (b)	2,3 (b)	5 (b)	3 (b)	NA	NA	NA
241-AN-01E	Supernate receiver pit (1)	NA	NA	NA	NA	NA	NA	NA	4 (b)	NA	5 (b)	3 (b)	NA	NA	NA
	Ventilation pits (4)	NA	NA	NA	NA	NA	NA	NA	4 (b)	NA	5 (b)	3 (b)	NA	NA	NA

Table D3.1-4-AN. TWRS Facility Hazard Identification. (3 sheets)

Facility	Type	A-Corrosive	B-Explosive/ Pyrophoric	C-Nuclear Criticality	D-Flammable Materials	E-Thermal Radiation	F-Chem. Rxtns.	G-Friction	H-Electrical	I-Kinetic-Rotation	J-Kinetic-Linear	K-Mass, Gravity, Height	L-Pressure-Volume	M-Thermal (except radiant)	Comments
Legend Boxes -->		Select applicable hazards from attached table and place corresponding hazard numbers in the boxes below.													Notes:
241-AN-274	Caustic addition control building	2 (b)	NA	NA	NA	NA	NA	2,4 (b)	4,9,10, 11 (b)	2,3 (b)	NA	NA	NA	3(9)(b)	(9) Heat trace
	Ventilation pad	NA	6,7 (b)	NA	11,14 (b)	NA	NA	1,2,3,4,5 (b)	4,6,10, 11,16 (b)	2,4 (b)	NA	NA	NA	3 (b)	NA
	Change trailer	NA	NA	NA	NA	NA	NA	NA	4,8,11 (b)	NA	NA	NA	5 (b)	3 (b)	NA

(a) OSD-T-151-00030, 1996, Operating Specifications for Watch List Tanks, Rev. B-17, Westinghouse Hanford Company, Richland, Washington.
(b) Cognizant Engineers: Bob Nicholson, Bill Meeuwsen, 4/4/96
(c) Crane loads in farm, tank
(d) Component part of ventilation system

This page intentionally left blank.

Table D3.1-4-AP. TWRS Facility Hazard Identification. (3 sheets)

Facility	Type	A- Corrosive	B- Explosive/Pyrophoric	C- Nuclear Criticality	D-Flammable Materials	E- Thermal Radiation	F- Chem. Rxtns.	G- Friction	H- Electrical	I- Kinetic-Rotation	J- Kinetic-Linear	K- Mass, Gravity, Height	L- Pressure-Volume	M- Thermal (except radiant)	Comments
Legend Boxes -->		Select applicable hazards from attached table and place corresponding hazard numbers in the boxes below.													Notes
AP TANK FARM		NA	NA	NA	NA	NA	NA	5 (c)	6 (b)	2, 3 (b)	NA	11 (c)	NA	NA	NA
241-AP-101	DST	2 (a)	6, 7, 8 (a)	15 (a)	4, 11, 14 (a)	5 * (a)	NA (a)	5 (c)	9, 14 (c)	3	NA (c)	NA (c)	NA (c)	NA (c)	* Tank waste (b)
241-AP-102	DST	2 (a)	6, 7, 8 (a)	15 (a)	4, 11, 14 (a)	5 * (a)	NA (a)	5 (c)	9, 14 (c)	3	NA (c)	NA (c)	NA (c)	NA (c)	* Tank waste (b)
241-AP-103	DST	2 (a)	6, 7, 8 (a)	15 (a)	4, 11, 14 (a)	5 * (a)	NA (a)	5 (c)	9, 14 (c)	3 (c)	NA (c)	NA (c)	NA (c)	NA (c)	* Tank waste (b)
241-AP-104	DST	2 (a)	6, 7, 8 (a)	15 (a)	4, 11, 14 (a)	5 * (a)	NA (a)	5 (c)	9, 14 (c)	3 (c)	NA (c)	NA (c)	NA (c)	NA (c)	* Tank waste (b)
241-AP-105	DST	2 (a)	6, 7, 8 (a)	15 (a)	4, 11, 14 (a)	5 * (a)	NA (a)	5 (c)	9, 14 (c)	3 (c)	NA (c)	NA (c)	NA (c)	NA (c)	* Tank waste (b)
241-AP-106	DST	2 (a)	6, 7, 8 (a)	15 (a)	4, 11, 14 (a)	5 * (a)	NA (a)	5 (c)	9, 14 (c)	3 (c)	NA (c)	NA (c)	NA (c)	NA (c)	* Tank waste (b)
241-AP-107	DST	2 (a)	6, 7, 8 (a)	15 (a)	4, 11, 14 (a)	5 * (a)	NA (a)	5 (c)	9, 14 (c)	3 (c)	NA (c)	NA (c)	NA (c)	NA (c)	* Tank waste (b)
241-AP-108	DST	2 (a)	6, 7, 8 (a)	15 (a)	4, 11, 14 (a)	5 * (a)	NA (a)	5 (c)	9, 14 (c)	3 (c)	NA (c)	NA (c)	NA (c)	NA (c)	* Tank waste (b)
241-AP	Valve pit	2 (b)	NA (b)	15 (b)	NA (b)	NA (b)	NA (b)	5 (b)	14 (b)	NA (b)	NA (b)	NA (b)	NA (b)	NA (b)	NA
COB-AP-07D	Clean out box	NA	NA	NA	NA	NA	NA	NA	NA	NA	NA	NA	NA	NA	NO COBs in AP Farm (b)
COB-AP-07E	Clean out box	NA	NA	NA	NA	NA	NA	NA	NA	NA	NA	NA	NA	NA	NO COBs in AP Farm (b)
COB-AP-07F	Clean out box	NA	NA	NA	NA	NA	NA	NA	NA	NA	NA	NA	NA	NA	NO COBs in AP Farm (b)
241-AP	Flush pit	NA (b)	NA (b)	NA (b)	NA (b)	NA (b)	NA (b)	NA (b)	14 (b)	NA (b)	NA (b)	NA (b)	NA (b)	NA (b)	leak detection in sump
241-AP-273	Service Bldg.	NA (c)	NA (c)	NA (c)	NA (c)	NA (c)	NA (c)	NA (c)	11, 14 (c)	NA (c)	NA (c)	NA (c)	NA (c)	3 (c)	Space heater in service Bld.
241-AP-02D	Feed pump pit	2 (b)	NA (b)	15 (b)	NA (b)	NA (b)	NA (b)	5 (c)	9, 14 (c)	3 (c)	NA (c)	NA (c)	NA (c)	NA (c)	NA
241-AP-07D	Mixer pump pit	NA (b)	NA (b)	NA (b)	NA (b)	NA (b)	NA (b)	NA (b)	NA (b)	NA (b)	NA (b)	NA (b)	NA (b)	NA (b)	07D pit empty

Table D3.1-4-AP. TWRS Facility Hazard Identification. (3 sheets)

Facility	Type	A- Corrosive	B- Explosive/Pyrophoric	C- Nuclear Criticality	D-Flammable Materials	E- Thermal Radiation	F- Chem. Rxtns.	G- Friction	H- Electrical	I- Kinetic- Rotation	J- Kinetic- Linear	K- Mass, Gravity, Height	L- Pressure- Volume	M- Thermal (except radiant)	Comments
Legend Boxes -->		Select applicable hazards from attached table and place corresponding hazard numbers in the boxes below.													Notes
241-AP-07E	Mixer pump pit	NA (b)	NA (b)	NA (b)	NA (b)	NA (b)	NA (b)	NA (b)	NA (b)	NA (b)	NA (b)	NA (b)	NA (b)	NA (b)	07E pit empty
241-AP-07F	Mixer pump pit	NA (b)	NA (b)	NA (b)	NA (b)	NA (b)	NA (b)	NA (b)	NA (b)	NA (b)	NA (b)	NA (b)	NA (b)	NA (b)	07F pit empty
241-AP-271	Instrument building	NA (c)	NA (c)	NA (c)	NA (c)	NA (c)	NA (c)	NA (c)	4, 3, 16, 5, 6, 7, 8, 11, 14 (c)	NA (c)	NA (c)	NA (c)	5 (c)	3 (c)	NA
241-AP-701	Compressor building	NA (c)	NA (c)	NA (c)	4, 5, 10 (c)	NA (c)	NA	1, 2, 3, 5 (c)	4, 6, 8, 10, 11, 14, 16 (c)	2, 4 (c)	NA (c)	NA (c)	6, 8 (c)	3, 6 (c)	Small flammable storage cabinet located in compressor Bldg. See SARA 313 report
K1 & K2	Vent Systems (Primary and annulus, seal pot pits)	2 (b)	6,7 (b)	NA (b)	4, 10, 11, 14 (b)	NA (b)	NA (b)	1, 2, 3, 5 (b)	4, 5, 6, 7, 10, 11, 14 (b)	2, 4 (b)	NA (b)	15 * (b)	NA (b)	3 (b)	Hatchways are a mass; gravity, height hazard
01A-08A	Central Pump pits (101-108)	2 (b)	NA (b)	15 (b)	NA (b)	NA (b)	NA (b)	5 (b)	9, 14 (b)	3 (b)	NA (b)	NA (b)	NA (b)	NA (b)	NA
01B-08B	Annulus Pump pits (101-108)	2 (b)	NA (b)	15 (b)	NA (b)	NA (b)	NA (b)	5 (b)	9, 14 (b)	3 (b)	NA (b)	NA (b)	NA (b)	NA (b)	NA
03C,05C	Leak Detection Pit	NA (b)	NA (b)	15 (b)	NA (b)	NA (b)	NA (b)	5 (b)	9, 14 (b)	3 (b)	NA (b)	NA (b)	NA (b)	NA (b)	NA
03D	Drain Pit	2 (b)	NA (b)	15 (b)	NA (b)	NA (b)	NA (b)	5 (b)	14 (b)	NA (b)	NA (b)	NA (b)	NA (b)	NA (b)	NA
Change trailer	MO 815	NA (b, c)	NA (b)	NA (b)	7,13 (b), did not open cabinet, assumed contents	NA (b)	NA (b)	NA (b)	14 (b)	NA (b)	1 (b) (transport vehicles)	NA (b)	5 (b) 2 gas bottles outside trailer supporting PCM1B	3 (b) space heaters in trailer	NA
AP Tank Farm	Satellite Accumulation Area	1, 2, 4	NA	NA	2, 10, 17 (tank contact wastes)	NA	NA	NA	NA	NA	NA	NA	NA	NA	NA

Table D3.1-4-AP. TWRS Facility Hazard Identification. (3 sheets)

Facility	Type	A- Corrosive	B- Explosive/Pyrophoric	C- Nuclear Criticality	D-Flammable Materials	E- Thermal Radiation	F- Chem. Rxtns.	G- Friction	H- Electrical	I- Kinetic-Rotation	J- Kinetic-Linear	K- Mass, Gravity, Height	L- Pressure-Volume	M- Thermal (except radiant)	Comments
Legend Boxes -->		Select applicable hazards from attached table and place corresponding hazard numbers in the boxes below.													Notes

* All from reference b

(a) OSD-T-151-00007, 1996, Operating Specifications for Double-Shell Tanks, Rev. H-17, Westinghouse Hanford Company, Richland, Washington.

(b) Cognizant engineer judgement, Katie White, 3/25/96

(c) Walkdown, 3/23/96, P. K. Brockman, S. Brewe, K. White, C. Saget

This page intentionally left blank.

Table D3.1-4-AW. TWRS Facility Hazard Identification. (2 sheets)

Facility	Type	A- Corrosive	B- Explosive/Pyrophoric	C- Nuclear Criticality	D-Flammable Materials	E- Thermal Radiation	F- Chem. Rxtns.	G- Friction	H- Electrical	I- Kinetic-Rotation	J- Kinetic-Linear	K- Mass, Gravity, Height	L- Pressure-Volume	M- Thermal (except radiant)	Comments
Legend Boxes -->		Select applicable hazards from attached table and place corresponding hazard numbers in the boxes below.													Notes
AW TANK FARM		NA	NA	NA	NA	NA	NA	5 (c)	6 (b)	2, 3 (b)	NA	11 (c)	NA	NA	NA
241-AW-101	DST	2 (a)	6, 7, 8 (a)	15 (a)	4, 11, 14 (a)	5 * (a)	NA (a)	5 (c)	4,6,9,10, 14 (c)	3	NA (c)	11 (c)	NA (c)	NA (c)	AW-101 is a watch list tank (hydrogen/ flammable gas) (d) * Tank waste (b)
241-AW-102	DST	2 (a)	6, 7, 8 (a)	15 (a)	4, 11, 14 (a)	5 * (a)	NA (a)	5 (c)	4,6,9,10, 14 (c)	3	NA (c)	11 (c)	NA (c)	NA (c)	* Tank waste (b)
241-AW-103	DST	2 (a)	6, 7, 8 (a)	15 (a)	4, 11, 14 (a)	5 * (a)	NA (a)	5 (c)	4,6,9,10, 14 (c)	3 (c)	NA (c)	11 (c)	NA (c)	NA (c)	* Tank waste (b)
241-AW-104	DST	2 (a)	6, 7, 8 (a)	15 (a)	4, 11, 14 (a)	5 * (a)	NA (a)	5 (c)	4,6,9,10, 14 (c)	3 (c)	NA (c)	11 (c)	NA (c)	NA (c)	* Tank waste (b) Recommended to be added as a watchlist tank. (d)
241-AW-105	DST	2 (a)	6, 7, 8 (a)	15 (a)	4, 11, 14 (a)	5 * (a)	NA (a)	5 (c)	4,6,9,10, 14 (c)	3 (c)	NA (c)	11 (c)	NA (c)	NA (c)	* Tank waste (b)
241-AW-106	DST	2 (a)	6, 7, 8 (a)	15 (a)	4, 11, 14 (a)	5 * (a)	NA (a)	5 (c)	4,6,9,10, 14 (c)	3 (c)	NA (c)	11 (c)	NA (c)	NA (c)	* Tank waste (b)
C0B-AW-09	Cleanout box	2 (a)	6, 7, 8 (a)	NA	NA	NA	NA	NA	4 (c)	NA	NA	NA	NA	NA	NA
C0B-AW-10	Cleanout box	2 (a)	6, 7, 8 (a)	NA	NA	NA	NA	NA	4 (c)	NA	NA	NA	NA	NA	NA
241-AW-701	Compressor building	NA (c)	NA (c)	NA (c)	4, 5, 10 (c)	NA (c)	NA	1, 2, 3, 5 (c)	4, 6, 8, 10, 11, 14, 16 (c)	2, 4 (c)	NA (c)	NA (c)	6, 8 (c)	3, 6 (c)	Small flammable storage cabinet located in compressor Bld. See SARA 313 report
241-AW-02E	Feed pump pit	2 (b)	NA (b)	15 (b)	NA (b)	NA (b)	NA (b)	5 (c)	9, 14 (c)	3 (c)	NA (c)	NA (c)	NA (c)	NA (c)	The feed pump pit belongs to the 242-A Evaporator.
241-AW	Flush pit	NA (b)	NA (b)	NA (b)	NA (b)	NA (b)	NA (b)	NA (b)	14 (b)	NA (b)	NA (b)	NA (b)	NA (b)	NA (b)	Leak detection in sump
241-AW-271	Instrument building	NA (c)	NA (c)	NA (c)	NA (c)	NA (c)	NA (c)	NA (c)	4, 3, 16, 5, 6, 7, 8, 11, 14 (c)	NA (c)	NA (c)	NA (c)	5 (c)	3 (c)	NA

Table D3.1-4-AW. TWRS Facility Hazard Identification. (2 sheets)

Facility	Type	A- Corrosive	B- Explosive/Pyrophoric	C- Nuclear Criticality	D-Flammable Materials	E- Thermal Radiation	F- Chem. Rxtns.	G- Friction	H- Electrical	I- Kinetic- Rotation	J- Kinetic- Linear	K- Mass, Gravity, Height	L- Pressure- Volume	M- Thermal (except radiant)	Comments
Legend Boxes -->		Select applicable hazards from attached table and place corresponding hazard numbers in the boxes below.													Notes
241-AW-272	Operations support facility	See comment	NA	NA	NA	NA	NA	NA	NA	NA	NA	NA	NA	NA	For maintenance shop materials refer to "Hazardous Materials Inventory Database," 1/10/96
241-AW-273	Service building	NA (c)	NA (c)	NA (c)	NA (c)	NA (c)	NA (c)	NA (c)	11, 14 (c)	NA (c)	NA (c)	NA (c)	NA (c)	3 (c)	Space heater in service Bld.
241-AW-A	Valve pit	2 (b)	NA (b)	15 (b)	NA (b)	NA (b)	NA (b)	5 (b)	14 (b)	NA (b)	NA (b)	NA (b)	NA (b)	NA (b)	NA
241-AW-B	Valve pit	2 (b)	NA (b)	15 (b)	NA (b)	NA (b)	NA (b)	5 (b)	14 (b)	NA (b)	NA (b)	NA (b)	NA (b)	NA (b)	NA
	Satellite Accumulation Area	1, 2, 4	NA	NA	2, 10, 17(tank contact wastes)	NA	NA	NA	NA	NA	NA	NA	NA	NA	NA

* All from reference b

(a) OSD-T-151-00007, 1996, Operating Specifications for Double-Shell Tanks, Rev. H-17, Westinghouse Hanford Company, Richland, Washington.

(b) Cognizant Engineer interview: Katie White, 3/25/96

(c) Walkdown, 3/23/96, P. K. Brockman, S. Brewe, K. White, C. Saget

(d) OSD-T-151-00030, 1996, Operating Specifications for Watch List Tanks, Rev. B-17, Westinghouse Hanford Company, Richland, Washington.

Table D3.1-4-AX. TWRS Facility Hazard Identification. (3 sheets)

Facility 241-AX-Tank Farm	Type	A-Corrosive	B-Explosive/ Pyrophoric	C-Nuclear Criticality	D-Flammable Materials	E-Thermal Radiation	F-Chem. Rxtns.	G-Friction	H-Electrical	I-Kinetic-Rotation	J-Kinetic-Linear	K-Mass, Gravity, Height	L-Pressure-Volume	M-Thermal (except radiant)	Comments
Legend Boxes -->		Select applicable hazards from attached table and place corresponding hazard numbers in the boxes below.													Notes
AX TANK FARM		NA	NA	NA	NA	NA	NA	5 (c)	6 (b)	2, 3 (b)	NA	11 (c)	NA	NA	NA
241-AX-101	SST	2 (b)	6,7,8 (a)	15 (b)	11,14 (a)	NA	NA	NA	4 (c)	NA	NA	NA	NA	NA	AX-101 is a watch list tank (hydrogen/flammable gas). (a)
241-AX-102	SST	2 (b)	6,7,8 (a)	15 (b)	11,13,14 (a)	NA	NA	NA	4 (c)	NA	NA	NA	NA	NA	AX-102 is a watch list tank (organics). (a)
241-AX-103	SST	2 (b)	6,7,8 (a)	15 (b)	11,14 (a)	NA	NA	NA	4 (c)	NA	NA	NA	NA	NA	AX-103 is a watch list tank (hydrogen/flammable gas). (a)
241-AX-104	SST	2 (b)	6,7,8 (a)	15 (b)	11,14 (a)	NA	NA	NA	4 (c)	NA	NA	NA	NA	NA	NA
241-AX-155	Diversion box	NA	NA	NA	NA	NA	NA	NA	4 (c)	NA	NA	NA	NA	NA	NA
241-AX-COBs	Cleanout boxes (10)	2 (b)	6,7,8 (a)	NA	NA	NA	NA	NA	4(d)	NA	NA	NA	NA	NA	NA
241-AX-152	Diverter station	NA	NA	NA	NA	NA	NA	NA	4 (c)	NA	NA	10,11 (c)	NA	NA	Diverter station includes a valve pit
241-AX-A&B	Flush pits (2)	NA	NA	NA	NA	NA	NA	NA	4 (c)	NA	NA	NA	NA	NA	Each metal cover has an open penetration
241-AX-101(1), 102 (2), 103 (2), 104 (2)	Pump pits B (1)	NA	NA	NA	NA	NA	NA	NA	4(d)(2)	NA	NA	NA	NA	NA	(1) Pits are inactive and weather enclosed with polyurethane foam. (2) Operable pit leak detector
241-AX-101 (2), 102 (1), 103 (1), 104 (1)	Sluice pits C,D (1)	NA	NA	NA	NA	NA	NA	NA	4(d)	NA	NA	NA	NA	NA	NA
241-AX-101	Distributor pits (1)	NA	NA	NA	NA	NA	NA	NA	4(d)(2)	NA	NA	NA	NA	NA	NA

Table D3.1-4-AX. TWRS Facility Hazard Identification. (3 sheets)

Facility 241-AX-Tank Farm	Type	A-Corrosive	B-Explosive/ Pyrophoric	C-Nuclear Criticality	D-Flammable Materials	E-Thermal Radiation	F-Chem. Rxtns.	G-Friction	H-Electrical	I-Kinetic-Rotation	J-Kinetic-Linear	K-Mass, Gravity, Height	L-Pressure-Volume	M-Thermal (except radiant)	Comments
Legend Boxes -->		Select applicable hazards from attached table and place corresponding hazard numbers in the boxes below.													Notes
241-AX-562	Valve pit	NA	NA	NA	NA	NA	NA	NA	NA	NA	NA	NA	NA	NA	NA
241-AX	Leak detection pits (4)	NA	NA	NA	NA	NA	NA	NA	NA	NA	NA	NA	NA	NA	Probe cords to each pit were lying on the ground.
241-A-211	Control room	NA	NA	NA	NA	NA	NA	NA	4,5(3)(c)	NA	NA	NA	NA	NA	(3) Substation outside of control room
241-A-350	Drainage lift station & catch tank	NA	NA	NA	NA	NA	NA	5 (c)	4,9,10 (c)	2,3 (c)	NA	11 (c)	NA	NA	NA
241-AX	Raw water service pit	NA	NA	NA	NA	NA	NA	NA	4 (c)	NA	NA	10 (c)	NA	NA	NA
241-AX-801A	Instrument building	NA	NA	NA	NA	NA	NA	NA	4,11,16 (c)	NA	NA	NA	NA	3 (c)	NA
241-AX-A&B	Valve pits	NA	NA	NA	NA	NA	NA	NA	4 (c)	NA	NA	NA	NA	3(4)(c)	(4) Heat traces in pit
241-AX-801B	Instrument building	NA	NA	NA	NA	NA	NA	NA	NA	NA	NA	NA	NA	3 (c)	Instruments all isolated except for a couple of leak signals. This building had a spill of aging waste previously.
	Old steam coil caissons (3)	NA	NA	NA	NA	NA	NA	NA	NA	NA	NA	NA	NA	NA	Caissons are isolated and filled with sand.
241-AX-2707	Change trailer	NA	NA	NA	NA	NA	NA	NA	NA	NA	NA	NA	NA	NA	NA
241-AX-151	Diversion box	NA	NA	NA	NA	NA	NA	NA	4 (c)	NA	NA	NA	NA	NA	NA
241-AX-153	Diversion box	NA	NA	NA	NA	NA	NA	NA	4 (c)	NA	NA	NA	NA	NA	NA
241-AX-501	Valve pit	NA	NA	NA	NA	NA	NA	NA	NA	NA	NA	NA	NA	NA	NA

Table D3.1-4-AX. TWRS Facility Hazard Identification. (3 sheets)

Facility 241-AX-Tank Farm	Type	A-Corrosive	B-Explosive/ Pyrophoric	C-Nuclear Criticality	D-Flammable Materials	E-Thermal Radiation	F-Chem. Rxtns.	G-Friction	H-Electrical	I-Kinetic-Rotation	J-Kinetic-Linear	K-Mass, Gravity, Height	L-Pressure-Volume	M-Thermal (except radiant)	Comments
Legend Boxes ->		Select applicable hazards from attached table and place corresponding hazard numbers in the boxes below.													Notes

(a) OSD-T-151-00030, 1996, Operating Specifications for Watch List Tanks, Rev. B-17, Westinghouse Hanford Company, Richland, Washington.
(b) Cognizant Engineer: Randy L. Powers, 5/9/96
(c) Field Walkdown, Charlotte Zaccone, Randy L. Powers, Matt Tiffany, Dave Aquilina, Suzanne Lindberg, David A. Bragg, 4/16/96.
(d) Cognizant Engineer: Joe Jones, 5/9/96

This page intentionally left blank.

Table D3.1-4-AY. TWRS Facility Hazard Identification. (2 sheets)

Facility Aging Waste Tanks 101 & 102-AY	Type	A- Corrosive	B- Explosive/ Pyrophoric	C- Nuclear Criticality	D-Flammable Materials	E- Thermal Radiation	F- Chem. Rxtns.	G- Friction	H- Electrical	I- Kinetic- Rotation	J- Kinetic- Linear	K- Mass, Gravity, Height	L- Pressure- Volume	M- Thermal (except radiant)	Comments
Legend Boxes -->		Select applicable hazards from attached tabls and place corresponding hazard numbers in the boxes below.													Notes
AY TANK FARM		NA	NA	NA	NA	NA	NA	5 (c)	6,9,10, 14 (b)	2, 3 (b)	5,7 (b)	3,11 (b)	NA	NA	NA
241-AY-101	DST	2 (b)	6,7,8 (b), 11(1) (b)	15 (b)	11,14(a)	5 (b)	NA	NA	4,6,9,14 4(2) (b)	3 (b)	NA	NA	9 (b)	NA	Has been recommended to be included as a watch list tank. (a) (1) Pu Oxide (2) High level probe
241-AY-102	DST	2,5 (b)	6,7,8 (b), 11(1)(b)	15 (b)	11,14 (b)	5 (b)	NA	NA	4(2)(b)	3 (b)	NA	NA	9 (b)	NA	(3) Flexible receiver
241-AY-152	Sluice transfer box	Isolated (b)	NA	NA	NA	NA	NA	NA	NA	NA	NA	NA	NA	NA	NA
241-AY-801	Instrument building	NA	NA	NA	NA	NA	NA	3 (b)	4,5,6,7, 8,11,16, 18 (b)	4 (b)	NA	16 (b)	NA	3 (b)	NA
241-AY-	Central pump pits (2)	NA	6(7)(b)	NA	4(b)	NA	NA	5 (b)	4,6,8,9, 10,16 (b)	2,3 (b)	NA	16 (b)	NA	NA	NA
241-AY-	Sluice pits B,C,D,E (8)	NA	NA	NA	4(b)	NA	NA	5 (b)	4,6,8,9, 10,16 (b)	2,3 (b)	NA	16 (b)	NA	NA	102-AY-02D has a lube oil pump
241-AY-	Annulus pump pits F (2)	NA	NA	NA	4(b)	NA	NA	5 (b)	4,6,8,9, 10,16 (b)	2,3 (b)	NA	16 (b)	NA	NA	NA
241-AY-	Raw water valve pits (10) (b)	NA	NA	NA	NA	NA	NA	NA	NA	NA	NA	16 (b)	NA	NA	NA
241-AY-	Leak detector pits (3)	2 (b)	NA	NA	NA	NA	NA	5 (b)	4,6,9, 10, (b)	2,3 (b)	NA	16 (b)	NA	NA	NA
241-702-A (in A farm)	Ventilation facility	NA	NA	NA	NA	NA	NA	1,2,3 (b)	4,6,10, 11 (b)	2,4 (b)	NA	16 (b)	NA	NA	NA
241-AY-	Annulus ventilation fans (2)	NA	NA	NA	NA	NA	NA	1,2,3 (b)	4,6,10, 11 (b)	2,4 (b)	NA	NA	NA	NA	NA

Table D3.1-4-AY. TWRS Facility Hazard Identification. (2 sheets)

Facility Aging Waste Tanks 101 & 102-AY	Type	A- Corrosive	B- Explosive/ Pyrophoric	C- Nuclear Criticality	D-Flammable Materials	E- Thermal Radiation	F- Chem. Rxtns.	G- Friction	H- Electrical	I- Kinetic- Rotation	J- Kinetic- Linear	K- Mass, Gravity, Height	L- Pressure- Volume	M- Thermal (except radiant)	Comments
Legend Boxes -->		Select applicable hazards from attached table and place corresponding hazard numbers in the boxes below.													Notes
241-AY-501	Condensate valve pit	NA	NA	NA	NA	NA	NA	NA	4, 6,14 (b) (leak detector)	NA	NA	16 (b)	NA	NA	NA
	Metal storage-construction	NA	NA	NA	NA	NA	NA	NA	12 (c)	NA	NA	NA	NA	NA	NA
	New ventilation recirculation bldgs (2)	NA	NA	NA	NA	NA	NA	NA	4, 6 (b)(c)	NA	NA	16 (b)	NA	NA	NA
	New primary ventilation intake (2)	NA	NA	NA	NA	NA	NA	NA	NA	NA	NA	NA	NA	NA	NA
	Satellite Accumula-tion Area	1, 2, 4	NA	NA	2, 10, 17(tank contact wastes)	NA	NA	NA	NA	NA	NA	NA	NA	NA	NA
	Change trailers (2)	NA	NA	NA	NA	NA	NA	NA	4 (c)	NA	NA	NA	5 (c)	NA	NA

(a) OSD-T-151-00030, 1996, Operating Specifications for Watch List Tanks, Rev. B-17, Westinghouse Hanford Company, Richland, Washington.
(b) Cognizant Engineer: Matt Tiffany
(c) Walkdown of AY Tank Farm: Charlotte Zaccone, Matt Tiffany, Suzanne Lindberg, Corey Saget, 4/15/96

Table D3.1-4-AZ. TWRS Facility Hazard Identification. (2 sheets)

Facility Aging Waste Tanks 101 & 102-AZ	Type	A- Corrosive	B- Explosive/ Pyrophoric	C- Nuclear Criticality	D-Flammable Materials	E- Thermal Radiation	F- Chem. Rxtns.	G- Friction	H- Electrical	I- Kinetic- Rotation	J- Kinetic- Linear	K- Mass, Gravity, Height	L- Pressure- Volume	M- Thermal (except radiant)	Comments
Legend Boxes -- >		Select applicable hazards from attached table and place corresponding hazard numbers in the boxes below.													Notes
AZ TANK FARM		NA	NA	NA	NA	NA	NA	5 (c)	6,9,10, 14 (b)	2, 3 (b)	5,7 (b)	3,11 (b)	NA	NA	NA
241-AZ-101	DST	2,5 (b)	6,7,8 (b), 11(1)(b)	15 (b)	11,14(a)	5 (b)	NA	NA	4(2)(b)	3 (b)	NA	NA	9 (b)	NA	(1) Pu Oxide (2) High level probe
241-AZ-102	DST	2,5 (b)	6,7,8 (b), 11(1)(b)	15 (b)	11,14 (b)	5 (b)	NA	NA	4(2)(b)	3 (b)	NA	NA	9 (b)	NA	(3) Flexible receiver
241-AZ-161	Airlift circulator caisson	2(4)(b)	NA	NA	NA	NA	NA	NA	4 (b)	NA	6(5)(b)	10,12(6)(b)	NA	NA	(4) Potential, does not currently exist
241-AZ-162	Airlift circulator caisson	2(4)(b)	NA	NA	NA	NA	NA	NA	4 (b)	NA	6(5)(b)	10,12(6)(b)	NA	NA	(5) Air flow through ALC ~4 cfm, 35 psi (6) Hatch door
241-AZ-151	Catch tank	2(7)(b)	6,7,8 (b)	15 (b)	11(b)(1), 14(a)(2)	NA	NA	2(b)(3), 3(d)(b), 7(5)(b)	4 (b),10(6)	2,3 (b)	(c)(b)	15(b)(c)	NA	3(b)(d)	(7) Potential waste transfer through 152-AZ (151 catches 152 drain)
241-AZ-152	Sluicing transfer box	2(7)(b)	6(7)(b)	NA	11(7)(b)	NA	NA	NA	4 (b)	NA	NA	NA	NA	NA	NA
241-AZ-154	Steam condensate pump pit & catch tank	NA	NA	NA	NA	NA	NA	2,5 (b)	4,9,10 (b)	2,3 (b)	NA	NA	NA	NA	NA
241-AZ-	Cleanout boxes	2,5 (b)	6,7,8 (b), 11(1)(b)	NA	NA	NA	NA	NA	4 (c)	NA	NA	NA	NA	NA	NA
241-AZ-155	Contaminated storage pit	2(8)(b)	NA	NA	NA	NA	NA	NA	7,9, 10(8)(b)	NA	NA	NA	NA	NA	Zip cord in cover penetration
241-AZ-801A	Instrument building	NA	NA	NA	NA	NA	NA	3 (b)	4,5,6,7, 8,11,16, 18 (b)	4 (b)	NA	NA	NA	3 (b)	NA
241-AZ-01A, 02A	Central pump pits A (2)	NA	NA	NA	NA	NA	NA	5 (b)	4,6,8,9, 10,16 (b)	2,3 (b)	NA	16 (b)	NA	NA	NA

Table D3.1-4-AZ. TWRS Facility Hazard Identification. (2 sheets)

Facility Aging Waste Tanks 101 & 102-AZ	Type	A- Corrosive	B- Explosive/ Pyrophoric	C- Nuclear Criticality	D-Flammable Materials	E- Thermal Radiation	F- Chem. Rxtns.	G- Friction	H- Electrical	I- Kinetic- Rotation	J- Kinetic- Linear	K- Mass, Gravity, Height	L- Pressure- Volume	M- Thermal (except radiant)	Comments
Legend Boxes -- >		Select applicable hazards from attached table and place corresponding hazard numbers in the boxes below.													Notes
241-AZ-01B-E, 02B-E	Sluice pits B,C (4)	NA	NA	NA	NA	NA	NA	5 (b)	4,6,8,9, 10,16 (b)	2,3 (b)	NA	16 (b)	NA	NA	NA
241-AZ-01F, 02F	Annulus pump pits F (2)	NA	NA	NA	NA	NA	NA	5 (b)	4,6,8,9, 10,16 (b)	2,3 (b)	NA	16 (b)	NA	NA	NA
241-AZ-	Valve pits (6)	NA	NA	NA	NA	NA	NA	NA	NA	NA	NA	16 (b)	NA	NA	NA
241-AZ-101/102	Leak detector pits (2)	2 (b)	NA	NA	NA	NA	NA	5 (b)	4,6,9, 10, (b)	2,3 (b)	NA	16 (b)	NA	NA	Rock sitting in cover block penetration (101-AZ)
241-702-A (in A farm)	Ventilation facility	NA	NA	NA	NA	NA	NA	1,2,3 (b)	4,6,10, 11 (b)	2,4 (b)	NA	16 (b)	NA	NA	NA
241-AZ-	Annulus ventilation fans (2)	NA	NA	NA	NA	NA	NA	1,2,3 (b)	4,6,10, 11 (b)	2,4 (b)	NA	NA	NA	NA	NA
	Primary ventilation recirculation bldg (2)	NA	NA	NA	NA	NA	NA	NA	4 (c)	NA	NA	NA	NA	NA	NA
	AY/AZ diesel generators	NA	NA	NA	NA	NA	NA	1,2,4,5 (b)	1,4,5,8, 10,14,16 (b)	2 (b)	NA	NA	NA	NA	NA
241-AZ-	Transformers 2 (outside fence)	NA	NA	NA	NA	NA	NA	NA	3,16 (c)	NA	NA	NA	NA	NA	Transformers do not contain PCBs.
216-A-39	Crib	NA	NA	NA	NA	NA	NA	NA	NA	NA	NA	NA	NA	NA	NA
	New primary ventilation intake facilities (2)	NA	NA	NA	NA	NA	NA	NA	NA	NA	NA	NA	NA	NA	NA

(a) OSD-T-151-00030, 1996, Operating Specifications for Watch List Tanks, Rev. B-17, Westinghouse Hanford Company, Richland, Washington.
(b) Cognizant Engineer: Matt Tiffany
(c) Walkdown of AY Tank Farm: Charlotte Zaccone, Matt Tiffany, Suzanne Lindberg, Corey Saget, 4/15/96

Table D3.1-4-B. TWRS Facility Hazard Identification. (5 sheets)

Facility	Type	A- Corrosive	B- Explosive/ Pyrophoric	C- Nuclear Criticality	D-Flammable Materials	E- Thermal Radiation	F- Chem. Rxtns.	G- Friction	H- Electrical	I- Kinetic- Rotation	J- Kinetic- Linear	K- Mass, Gravity, Height	L- Pressure- Volume	M- Thermal (except radiant)	Comments
Legend Boxes ->		Select applicable hazards from attached table and place corresponding hazard numbers in the boxes below.													Notes
B Farm		NA	NA	NA	9 *, 17 (wd)	NA	NA	NA	3, 4, 6,16, 18 ** (wd)	NA	NA	2 *** (wd)	NA	NA	* Two small change trailers on east side of B Farm ** High voltage at north end of Farm *** A few stairs leading to change trailers Only tank B-103 is on the organic watch list. None on the high heat or flammable gas watch list (d3)
241-B-101	SST	1-6 (d1, i1)	6,7,8 (d1, i1)	15 (d1)	11,13,14 (d1)	NA	NA	NA	6, 14 * (wd)	NA	NA	11 ** (wd)	NA	NA	* Temperature probes, liquid level devices, etc ** Tank has pits, but all are weather covered and inactive (none open)
241-B-102	SST	1-6 (d1, i1)	6,7,8 (d1, i1)	15 (d1)	11,13,14 (d1)	NA	NA	NA	6, 14 * (wd)	NA	NA	11 ** (wd)	NA	NA	* Temperature probes, liquid level devices, etc ** Tank has pits, but all are weather covered and inactive (none open)
241-B-103	SST	1-6 (d1, i1)	6,7,8 (d1, i1)	15 (d1)	11,13,14 *** (d1)	NA	NA	NA	6, 14 * (wd)	NA	NA	11 ** (wd)	NA	NA	* Temperature probes, liquid level devices, etc ** Tank has pits, but all are weather covered and inactive (none open) *** Tank B-103 is on the organic watch list. Not on flammable gas watch list (d3)

Table D3.1-4-B. TWRS Facility Hazard Identification. (5 sheets)

Facility	Type	A- Corrosive	B- Explosive/ Pyrophoric	C- Nuclear Criticality	D-Flammable Materials	E- Thermal Radiation	F- Chem. Rxtns.	G- Friction	H- Electrical	I- Kinetic- Rotation	J- Kinetic- Linear	K- Mass, Gravity, Height	L- Pressure- Volume	M- Thermal (except radiant)	Comments
Legend Boxes -->	Select applicable hazards from attached table and place corresponding hazard numbers in the boxes below.														Notes
241-B-104	SST	1-6 (d1, i1)	6,7,8 (d1, i1)	15 (d1)	11,13,14 (d1)	NA	NA	NA	6, 14 * (wd)	NA	NA	11 ** (wd)	NA	NA	* Temperature probes, liquid level devices, etc ** Tank has pits, but all are weather covered and inactive (none open)
241-B-105	SST	1-6 (d1, i1)	6,7,8 (d1, i1)	15 (d1)	11,13,14 (d1)	NA	NA	NA	6, 14 * (wd)	NA	NA	11 ** (wd)	NA	NA	* Temperature probes, liquid level devices, etc ** Tank has pits, but all are weather covered and inactive (none open)
241-B-106	SST	1-6 (d1, i1)	6,7,8 (d1, i1)	15 (d1)	11,13,14 (d1)	NA	NA	NA	6, 14 * (wd)	NA	NA	11 ** (wd)	NA	NA	* Temperature probes, liquid level devices, etc ** Tank has pits, but all are weather covered and inactive (none open)
241-B-107	SST	1-6 (d1, i1)	6,7,8 (d1, i1)	15 (d1)	11,13,14 (d1)	NA	NA	NA	6, 14 * (wd)	NA	NA	11 ** (wd)	NA	NA	* Temperature probes, liquid level devices, etc ** Tank has pits, but all are weather covered and inactive (none open)
241-B-108	SST	1-6 (d1, i1)	6,7,8 (d1, i1)	15 (d1)	11,13,14 (d1)	NA	NA	NA	6, 14 * (wd)	NA	NA	11 ** (wd)	NA	NA	* Temperature probes, liquid level devices, etc ** Tank has pits, but all are weather covered and inactive (none open)

Table D3.1-4-B. TWRS Facility Hazard Identification. (5 sheets)

Facility	Type	A- Corrosive	B- Explosive/ Pyrophoric	C- Nuclear Criticality	D-Flammable Materials	E- Thermal Radiation	F- Chem. Rxtns.	G- Friction	H- Electrical	I- Kinetic- Rotation	J- Kinetic- Linear	K- Mass, Gravity, Height	L- Pressure- Volume	M- Thermal (except radiant)	Comments
Legend Boxes -->		Select applicable hazards from attached table and place corresponding hazard numbers in the boxes below.													Notes
241-B-109	SST	1-6 (d1, i1)	6,7,8 (d1, i1)	15 (d1)	11,13,14 (d1)	NA	NA	NA	6, 14 * (wd)	NA	NA	11 ** (wd)	NA	NA	* Temperature probes, liquid level devices, etc ** Tank has pits, but all are weather covered and inactive (none open)
241-B-110	SST	1-6 (d1, i1)	6,7,8 (d1, i1)	15 (d1)	11,13,14 (d1)	NA	NA	NA	6, 14 * (wd)	NA	NA	11 ** (wd)	NA	NA	* Temperature probes, liquid level devices, etc ** Tank has pits, but all are weather covered and inactive (none open)
241-B-111	SST	1-6 (d1, i1)	6,7,8 (d1, i1)	15 (d1)	11,13,14 (d1)	NA	NA	NA	6, 14 * (wd)	NA	NA	11 ** (wd)	NA	NA	* Temperature probes, liquid level devices, etc ** Tank has pits, but all are weather covered and inactive (none open) (d3)
241-B-112	SST	1-6 (d1, i1)	6,7,8 (d1, i1)	15 (d1)	11,13,14 (d1)	NA	NA	NA	6, 14 * (wd)	NA	NA	11 ** (wd)	NA	NA	* Temperature probes, liquid level devices, etc ** Tank has pits, but all are weather covered and inactive (none open)
241-B-201	SST	1-6 (d1, i1)	6,7,8 (d1, i1)	15 (d1)	11,13,14 (d1)	NA	NA	NA	6, 14 * (wd)	NA	NA	11 ** (wd)	NA	NA	* Temperature probes, liquid level devices, etc ** Tank has pits, but all are weather covered and inactive (none open)

Table D3.1-4-B. TWRS Facility Hazard Identification. (5 sheets)

Facility	Type	A- Corrosive	B- Explosive/ Pyrophoric	C- Nuclear Criticality	D-Flammable Materials	E- Thermal Radiation	F- Chem. Rxtns.	G- Friction	H- Electrical	I- Kinetic- Rotation	J- Kinetic- Linear	K- Mass, Gravity, Height	L- Pressure- Volume	M- Thermal (except radiant)	Comments
Legend Boxes -->		Select applicable hazards from attached table and place corresponding hazard numbers in the boxes below.													Notes
241-B-202	SST	1-6 (d1, i1)	6,7,8 (d1, i1)	15 (d1)	11,13,14 (d1)	NA	NA	NA	6, 14 * (wd)	NA	NA	11 ** (wd)	NA	NA	* Temperature probes, liquid level devices, etc ** Tank has pits, but all are weather covered and inactive (none open)
241-B-203	SST	1-6 (d1, i1)	6,7,8 (d1, i1)	15 (d1)	11,13,14 (d1)	NA	NA	NA	6, 14 * (wd)	NA	NA	11 ** (wd)	NA	NA	* Temperature probes, liquid level devices, etc ** Tank has pits, but all are weather covered and inactive (none open)
241-B-204	SST	1-6 (d1, i1)	6,7,8 (d1, i1)	15 (d1)	11,13,14 (d1)	NA	NA	NA	6, 14 * (wd)	NA	NA	11 ** (wd)	NA	NA	* Temperature probes, liquid level devices, etc **Tank has pits, but all are weather covered and inactive (none open)
216-B-55	Crib	NA	NA	NA	NA	NA	NA	NA	NA	NA	NA	NA	NA	NA	Inactive and isolated. (i2)
216-B-62	Crib	NA	NA	NA	NA	NA	NA	NA	NA	NA	NA	NA	NA	NA	Inactive and isolated. (i2)
216-B-63	Ditch	NA	NA	NA	NA	NA	NA	NA	NA	NA	NA	NA	NA	NA	Inactive, backfilled with clean fill, downposted to underground radioactive material area, and permanently isolated. (i2)
241-B-151	Diversion box	NA	NA	NA	NA	NA	NA	NA	NA	NA	NA	NA	NA	NA	Diversion boxes are all isolated and weather covered.
241-B-152	Diversion box	NA	NA	NA	NA	NA	NA	NA	NA	NA	NA	NA	NA	NA	Diversion boxes are all isolated and weather covered.

Table D3.1-4-B. TWRS Facility Hazard Identification. (5 sheets)

Facility	Type	A- Corrosive	B- Explosive/ Pyrophoric	C- Nuclear Criticality	D-Flammable Materials	E- Thermal Radiation	F- Chem. Rxtns.	G- Friction	H- Electrical	I- Kinetic- Rotation	J- Kinetic- Linear	K- Mass, Gravity, Height	L- Pressure- Volume	M- Thermal (except radiant)	Comments
Legend Boxes -->		Select applicable hazards from attached table and place corresponding hazard numbers in the boxes below.													Notes
241-B-153	Diversion box	NA	NA	NA	NA	NA	NA	NA	NA	NA	NA	NA	NA	NA	Diversion boxes are all isolated and weather covered.
241-B-154	Diversion box	NA	NA	NA	NA	NA	NA	NA	NA	NA	NA	NA	NA	NA	Diversion boxes are all isolated and weather covered.
241-B-252	Diversion box	NA	NA	NA	NA	NA	NA	NA	NA	NA	NA	NA	NA	NA	Diversion boxes are all isolated and weather covered.
242-B-151	Diversion box	NA	NA	NA	NA	NA	NA	NA	NA	NA	NA	NA	NA	NA	Diversion boxes are all isolated and weather covered.
241-B-301B	IMUST rad contaminated	2 (d4)	6 (d4)	15 (d4)	11 (d4)	NA	NA	NA	NA	NA	NA	NA	NA	NA	Tank is isolated (d4)
241-B-302B	IMUST rad contaminated	2 (d4)	6 (d4)	15 (d4)	11,13 (d4)	NA	NA	NA	NA	NA	NA	NA	NA	NA	Tank is stabilized and isolated (d4)
216-B-3	Pond (B expansion ponds)	NA	NA	NA	NA	NA	NA	NA	NA	NA	NA	NA	NA	NA	Expansion ponds active. Will remain under WHC. Ecology certified clean closed under RCRA, 6/27/95 (i2)
	Satellite accumulation area	1,2,4 * (wd)	NA	NA	2, 6, 10, 17 *	NA	NA	NA	NA	NA	NA	NA	NA	NA	* Satellite accumulation boxes were not opened during walkdowns. Hazards listed are the expected, potential hazards.

(d1) = OSD-T-151-00013, 1996, Operating Specifications for Single-Shell Waste Storage Tanks, Rev. D-10, Westinghouse Hanford Company, Richland, Washington.
(d3) = WHC-EP-0182, 1995, Waste Tank Summary Report for Month Ending December 31, 1995, Rev. 93, Westinghouse Hanford Company, Richland, Washington.
(d4) = WHC-SD-EN-ES-040, 1994, Engineering Study of 50 Miscellaneous Inactive Underground Radioactive Waste Tanks Located at the Hanford Site, Washington, Rev. 0, Westinghouse Hanford Company, Richland, Washington.
(i1) = Interview with Cognizant Engineer, Randy L. Powers, 4/3/96.
(i2) = Information provided by Kip McDowell, Westinghouse Hanford Company, 4/18/96.
(wd) = Walkdown of B Farm, 4/5/96, David A. Bragg and S. Brewe

This page intentionally left blank.

Table D3.1-4-BX. TWRS Facility Hazard Identification. (4 sheets)

Facility	Type	A- Corrosive	B- Explosive/ Pyrophoric	C- Nuclear Criticality	D-Flammable Materials	E- Thermal Radiation	F- Chem. Rxtns.	G- Friction	H- Electrical	I- Kinetic- Rotation	J- Kinetic- Linear	K- Mass, Gravity, Height	L- Pressure- Volume	M- Thermal (except radiant)	Comments
Legend Boxes -->		Select applicable hazards from attached table and place corresponding hazard numbers in the boxes below.													Notes
BX FARM		1 * (wd)	NA	NA	9 (wd)	NA	NA	NA	3, 4, 6, 16, 18 (wd)	NA	NA	2 **, 16 (wd)	5, 12 *** (wd)	NA	* Large tank of phosphoric acid near BX-112 ** Stairs leading into change trailer *** Gas bottles for PCM1B near change trailer, fire hydrant in tank farm. * No tanks are high heat, organic or flammable gas watchlist tanks, but BX-107 has been recommended for addition to the flammable gas watchlist (d3, d7)
241-BX-101	SST	1-6, (d1, i1)	6, 7, 8 (d1, i1)	15 (d1)	11, 13, 14 (d1)	NA	NA	NA	6, 14 ** (wd)	NA	NA	11 *** (wd)	NA	NA	** Temperature probes, liquid level devices *** Tanks have pits, but none open
241-BX-102	SST	1-6, (d1, i1)	6, 7, 8 (d1, i1)	15 (d1)	11, 13, 14 (d1)	NA	NA	NA	6, 14 ** (wd)	NA	NA	11 *** (wd)	NA	NA	** Temperature probes, liquid level devices *** Tanks have pits, but none open
241-BX-103	SST	1-6, (d1, i1)	6, 7, 8 (d1, i1)	15 (d1)	11, 13, 14 (d1)	NA	NA	NA	6, 14 ** (wd)	NA	NA	11 *** (wd)	NA	NA	** Temperature probes, liquid level devices *** Tanks have pits, but none open
241-BX-104	SST	1-6, (d1, i1)	6, 7, 8 (d1, i1)	15 (d1)	11, 13, 14 (d1)	NA	NA	NA	6, 14 ** (wd)	NA	NA	11 *** (wd)	NA	NA	** Temperature probes, liquid level devices *** Tanks have pits, but none open

Table D3.1-4-BX. TWRS Facility Hazard Identification. (4 sheets)

Facility	Type	A-Corrosive	B-Explosive/ Pyrophoric	C-Nuclear Criticality	D-Flammable Materials	E-Thermal Radiation	F-Chem. Rxtns.	G-Friction	H-Electrical	I-Kinetic-Rotation	J-Kinetic-Linear	K-Mass, Gravity, Height	L-Pressure-Volume	M-Thermal (except radiant)	Comments
Legend Boxes -->	Select applicable hazards from attached table and place corresponding hazard numbers in the boxes below.														Notes
241-BX-105	SST	1-6, (d1, i1)	6, 7, 8 (d1, i1)	15 (d1)	11, 13, 14 (d1)	NA	NA	NA	6, 14 ** (wd)	NA	NA	11 *** (wd)	NA	NA	** Temperature probes, liquid level devices *** Open pit(caisson w/nothing inside, no lid) south of the tank (wd)
241-BX-106	SST	1-6, (d1, i1)	6, 7, 8 (d1, i1)	15 (d1)	11, 13, 14 (d1)	NA	NA	NA	6, 14 ** (wd)	NA	NA	11 *** (wd)	NA	NA	** Temperature probes, liquid level devices *** Tanks have pits, but none open
241-BX-107	SST	1-6, (d1, i1)	6, 7, 8 (d1, i1)	15 (d1)	11, 13, 14 * (d1)	NA	NA	5 (wd)	6, 9, 10 14 ** (wd)	2, 3 (wd)	NA	11 *** (wd)	NA	NA	* Tank BX-107 has been recommended for addition to the flammable gas watchlist.(d7) ** Temperature probes, liquid level devices *** Tanks have pits, but none open
241-BX-108	SST	1-6, (d1, i1)	6, 7, 8 (d1, i1)	15 (d1)	11, 13, 14 (d1)	NA	NA	NA	6, 14 ** (wd)	NA	NA	11 *** (wd)	NA	NA	** Temperature probes, liquid level devices *** Tanks have pits, but none open
241-BX-109	SST	1-6, (d1, i1)	6, 7, 8 (d1, i1)	15 (d1)	11, 13, 14 (d1)	NA	NA	5 (wd)	6, 9, 10, 14 ** (wd)	2, 3 (wd)	NA	11 *** (wd)	NA	NA	** Temperature probes, liquid level devices *** Tanks have pits, but none open
241-BX-110	SST	1-6, (d1, i1)	6, 7, 8 (d1, i1)	15 (d1)	11, 13, 14 (d1)	NA	NA	5 (wd)	6, 9, 10, 14 ** (wd)	2, 3 (wd)	NA	11 *** (wd)	NA	NA	** Temperature probes, liquid level devices *** Tanks have pits, but none open

Table D3.1-4-BX. TWRS Facility Hazard Identification. (4 sheets)

Facility	Type	A-Corrosive	B-Explosive/ Pyrophoric	C-Nuclear Criticality	D-Flammable Materials	E-Thermal Radiation	F-Chem. Rxtns.	G-Friction	H-Electrical	I-Kinetic-Rotation	J-Kinetic-Linear	K-Mass, Gravity, Height	L-Pressure-Volume	M-Thermal (except radiant)	Comments
Legend Boxes -->		Select applicable hazards from attached table and place corresponding hazard numbers in the boxes below.													Notes
241-BX-111	SST	1-6, (d1, i1)	6, 7, 8 (d1, i1)	15 (d1)	11, 13, 14 (d1)	NA	NA	5 (wd)	6, 9, 10, 14 ** (wd)	2, 3 (wd)	NA	11 *** (wd)	NA	NA	** Temperature probes, liquid level devices *** Tanks have pits, but none open
241-BX-112	SST	1-6, (d1, i1)	6, 7, 8 (d1, i1)	15 (d1)	11, 13, 14 (d1)	NA	NA	5 (wd)	6, 9, 10, 14 ** (wd)	2, 3 (wd)	NA	11 *** (wd)	NA	NA	** Temperature probes, liquid level devices *** Tanks have pits, but none open
244-BX	Catch station	NA	NA	NA	NA	NA	NA	NA	NA	NA	NA	NA	NA	NA	See DCRT below (same facility)
241-BXR-151	Diversion box	NA	NA	NA	NA	NA	NA	NA	NA	NA	NA	NA	NA	NA	All diversion boxes are isolated and weather covered.
241-BXR-152	Diversion box	NA	NA	NA	NA	NA	NA	NA	NA	NA	NA	NA	NA	NA	All diversion boxes are isolated and weather covered.
241-BXR-153	Diversion box	NA	NA	NA	NA	NA	NA	NA	NA	NA	NA	NA	NA	NA	All diversion boxes are isolated and weather covered.
244-BX	DCRT	2, 6 (salt well pumping waste) (d4)	6,7,8 (same as tank waste)	15 (same as tank waste)	11, 13, 14 (same as tank waste)	NA	NA	3, 5 (d5)	4, 6, 9, 10, 11 (d5)	2,3,4 (d5)	5 * (d5)	3, 11 ** (d5)	NA	3 (d5)	* Crane needed to access pits for filter changes ** DCRT has pits, but they aren't open (not really hazards)
241-BX-302A	IMUST rad contaminated	unknown (d2, d6)	6 (low risk) (d2)	15 (low risk) (d2)	11 (low risk), 13 (no data) (d2)	NA	NA	NA	NA	NA	NA	NA	NA	NA	Inactive tank.
241-BX-302B	IMUST rad contaminated	unknown (d2, d6)	6 (low risk) (d2)	15 (low risk) (d2)	11 (low risk), 13 (no data) (d2)	NA	NA	NA	NA	NA	NA	NA	NA	NA	Inactive tank.
241-BX-302C	IMUST rad contaminated	unknown (d2, d6)	6 (low risk) (d2)	15 (low risk) (d2)	11 (low risk), 13 (no data) (d2)	NA	NA	NA	NA	NA	NA	NA	NA	NA	Inactive tank.

Table D3.1-4-BX. TWRS Facility Hazard Identification. (4 sheets)

Facility	Type	A- Corrosive	B- Explosive/ Pyrophoric	C- Nuclear Criticality	D-Flammable Materials	E- Thermal Radiation	F- Chem. Rxtns.	G- Friction	H- Electrical	I- Kinetic- Rotation	J- Kinetic- Linear	K- Mass, Gravity, Height	L- Pressure- Volume	M- Thermal (except radiant)	Comments
Legend Boxes ->		Select applicable hazards from attached table and place corresponding hazard numbers in the boxes below.													Notes
244-BXR-001	IMUST rad contaminated	6 (metal waste slurry (d2)	6 (low risk) (d2)	no risk (d2)	11, 13 (low risk) (d2)	NA	NA	NA	NA	NA	NA	NA	NA	NA	Inactive tank.
244-BXR-002	IMUST rad contaminated	1 (d2)	6 (low risk) (d2)	no risk (d2)	11, 13 (low risk) (d2) 12 (d2)	NA	NA	NA	NA	NA	NA	NA	NA	NA	Inactive tank.
244-BXR-003	IMUST rad contaminated	1 (d2)	6 (low risk) (d2)	no risk (d2)	11, 13 (low risk) (d2) 12 (d2)	NA	NA	NA	NA	NA	NA	NA	NA	NA	Inactive tank.
244-BXR-011	IMUST rad contaminated	1 (d2)	6 (low risk) (d2)	no risk (d2)	11, 13 (low risk) (d2) 12 (d2)	NA	NA	NA	NA	NA	NA	NA	NA	NA	Inactive tank.
244-BX Instrument Bldg.	Instrument Building	NA	NA	NA	8 (wd)	NA	NA	NA	3,4, 8, 11, 14, 16 (wd)	NA	NA	NA	NA	3, 6 (wd)	Raw water line to service pit goes through this building.
BX/BY Raw Water Service Pit	Raw water service pit	NA	NA	NA	NA	NA	NA	NA	NA	NA	NA	11 *, 16 (wd)	NA	NA	* Pit, but not open (it is covered) Raw water service pit for BX and BY Farms
	Satellite accumulation area	1,2,4 * (wd)	NA	NA	2, 6, 10, 17 *	NA	NA	NA	NA	NA	NA	NA	NA	NA	* Satellite accumulation boxes were not opened during walkdowns. Hazards listed are the expected, potential hazards.

(d1) = OSD-T-151-00013, 1996, Operating Specifications for Single-Shell Waste Storage Tanks, Rev. D-10, Westinghouse Hanford Company, Richland, Washington.
(d2) = WHC-SD-EN-ES-040, 1994, Engineering Study of 50 Miscellaneous Inactive Underground Radioactive Waste Tanks Located at the Hanford Site, Washington, Rev. 0, Westinghouse Hanford Company, Richland, Washington.
(d3) = WHC-EP-0182, 1995, Waste Tank Summary Report for Month Ending December 31, 1995, Rev. 93, Westinghouse Hanford Company, Richland, Washington.
(d4) = WHC-SD-WM-ISB-001, 1993, Hanford Site Tank Farm Facilities Interim Safety Basis, Rev. 0, Westinghouse Hanford Company, Richland, Washington.
(d5) = 244-BX DCRT Facility Manual Using STONEview/CATIA, Stone and Webster Advanced Systems Development Services, Inc., March 1994
(d6) = WHC-EP-0861, 1995, Status Report for Inactive Miscellaneous Underground Storage Tanks at Hanford Site 200 Areas, Rev. 0, Westinghouse Hanford Company, Richland, Washington.
(d7) = OSD-T-151-00030, 1996, Operating Specifications for Water List Tanks, Rev. B-17, Westinghouse Hanford Company, Richland, Washington.
(i1) = Interview with Cognizant Engineer, Randy L. Powers, 4/3/96wd = walkdown of BX Farm, 4/5/96, David A. Bragg, R. L. Powers, P. K. Brockman, and S. Brewe.
(wd) = Walkdown

Table D3.1-4-BY. TWRS Facility Hazard Identification. (6 sheets)

Facility	Type	A- Corrosive	B- Explosive/ Pyrophoric	C- Nuclear Criticality	D-Flammable Materials	E- Thermal Radiation	F- Chem. Rxtns.	G- Friction	H- Electrical	I- Kinetic- Rotation	J- Kinetic- Linear	K- Mass, Gravity, Height	L- Pressure- Volume	M- Thermal (except radiant)	Comments
Legend Boxes ->		Select applicable hazards from attached table and place corresponding hazard numbers in the boxes below.													Notes
BY FARM		NA	NA	NA	8 (wd)	NA	NA	NA	3, 4, 6, 16, 18 (wd)	NA	1 (wd)	16 (wd)	NA	NA	Vans in farm associated with sampling activities. (wd) Tanks BY-103, 104, 105, 106, 107, 108, 110, 111, and 112 are ferrocyanide watchlist tanks. * No flammable gas, high heat, or organic watchlist tanks, but BY-101, 102, 103, 105, 106, and 109 have been recommended for addition to the flammable gas watchlist (d3, d5)
241-BY-101	SST	1-6 (i1, d1)	6, 7, 8 (i1, d1)	15 (d1)	11, 13, 14 * (d1)	NA	NA	NA	6, 14 ** (wd)	NA	NA	11 *** (wd)	NA	NA	* Tank BY-101 recommended for addition to flammable gas watchlist (d5) ** Temperature probes, liquid level devices, etc. *** Pits on tank, but none open
241-BY-102	SST	1-6 (i1, d1)	6, 7, 8 (i1, d1)	15 (d1)	11, 13, 14 * (d1)	NA	NA	5 (wd)	6, 9, 10, 14 ** (wd)	2, 3 (wd)	NA	11 *** (wd)	NA	NA	* Tank BY-102 recommended for addition to flammable gas watchlist (d5) ** Temperature probes, liquid level devices, etc. *** Pits on tank, but none open

Table D3.1-4-BY. TWRS Facility Hazard Identification. (6 sheets)

Facility	Type	A-Corrosive	B-Explosive/ Pyrophoric	C-Nuclear Criticality	D-Flammable Materials	E-Thermal Radiation	F-Chem. Rxtns.	G-Friction	H-Electrical	I-Kinetic-Rotation	J-Kinetic-Linear	K-Mass, Gravity, Height	L-Pressure-Volume	M-Thermal (except radiant)	Comments
Legend Boxes -->		Select applicable hazards from attached table and place corresponding hazard numbers in the boxes below.													Notes
241-BY-103	SST	1-6 (i1, d1)	6, 7, 8 (i1, d1)	15 (d1)	11, 13, 14 * (d1)	NA	NA	5 (wd)	6, 9, 10, 14 ** (wd)	2, 3 (wd)	NA	11 *** (wd)	NA	NA	Tank BY-103 is on the ferrocyanide watchlist. * Tank BY-103 recommended for addition to flammable gas watchlist (d5) ** Temperature probes, liquid level devices, etc. *** Pits on tank, but none open
241-BY-104	SST	1-6 (i1, d1)	6, 7, 8 (i1, d1)	15 (d1)	11, 13, 14 (d1)	NA	NA	NA	6, 14 ** (wd)	NA	NA	11 *** (wd)	NA	NA	Tank BY-104 is on the ferrocyanide watchlist. ** Temperature probes, liquid level devices, etc. *** Pits on tank, but none open
241-BY-105	SST	1-6 (i1, d1)	6, 7, 8 (i1, d1)	15 (d1)	11, 13, 14 * (d1)	NA	NA	5 (wd)	6, 9, 10, 14 ** (wd)	2, 3 (wd)	NA	11 *** (wd)	NA	NA	Tank BY-105 is on the ferrocyanide watchlist. * Tank BY-105 recommended for addition to flammable gas watchlist (d5) ** Temperature probes, liquid level devices, etc. *** Pits on tank, but none open

Table D3.1-4-BY. TWRS Facility Hazard Identification. (6 sheets)

Facility	Type	A- Corrosive	B- Explosive/ Pyrophoric	C- Nuclear Criticality	D-Flammable Materials	E- Thermal Radiation	F- Chem. Rxtns.	G- Friction	H- Electrical	I- Kinetic- Rotation	J- Kinetic- Linear	K- Mass, Gravity, Height	L- Pressure- Volume	M- Thermal (except radiant)	Comments
Legend Boxes -->		Select applicable hazards from attached table and place corresponding hazard numbers in the boxes below.													Notes
241-BY-106	SST	1-6 (i1, d1)	6, 7, 8 (i1, d1)	15 (d1)	11, 13, 14 * (d1)	NA	NA	5 (wd)	6, 9, 10, 14 ** (wd)	2, 3 (wd)	NA	11 *** (wd)	NA	NA	Tank BY-106 is on the ferrocyanide watchlist. * Tank BY-106 recommended for addition to flammable gas watchlist (d5) ** Temperature probes, liquid level devices, etc. *** Pits on tank, but none open
241-BY-107	SST	1-6 (i1, d1)	6, 7, 8 (i1, d1)	15 (d1)	11, 13, 14 (d1)	NA	NA	NA	6, 14 ** (wd)	NA	NA	11 *** (wd)	NA	NA	Tank BY-107 is on the ferrocyanide watchlist. ** Temperature probes, liquid level devices, etc. *** Pits on tank, but none open
241-BY-108	SST	1-6 (i1, d1)	6, 7, 8 (i1, d1)	15 (d1)	11, 13, 14 (d1)	NA	NA	NA	6, 14 ** (wd)	NA	NA	11 *** (wd)	NA	NA	Tank BY-108 is on the ferrocyanide watchlist. ** Temperature probes, liquid level devices, etc. *** Pits on tank, but none open
241-BY-109	SST	1-6 (i1, d1)	6, 7, 8 (i1, d1)	15 (d1)	11, 13, 14 * (d1)	NA	NA	5 (wd)	6, 9, 10, 14 ** (wd)	2, 3 (wd)	NA	11 *** (wd)	NA	NA	* Tank BY-109 recommended for addition to flammable gas watchlist (d5) ** Temperature probes, liquid level devices, etc. *** Pits on tank, but none open

Table D3.1-4-BY. TWRS Facility Hazard Identification. (6 sheets)

Facility	Type	A-Corrosive	B-Explosive/ Pyrophoric	C-Nuclear Criticality	D-Flammable Materials	E-Thermal Radiation	F-Chem. Rxtns.	G-Friction	H-Electrical	I-Kinetic-Rotation	J-Kinetic-Linear	K-Mass, Gravity, Height	L-Pressure-Volume	M-Thermal (except radiant)	Comments
Legend Boxes -->		Select applicable hazards from attached table and place corresponding hazard numbers in the boxes below.													Notes
241-BY-110	SST	1-6 (i1, d1)	6, 7, 8 (i1, d1)	15 (d1)	11, 13, 14 (d1)	NA	NA	NA	6, 14 ** (wd)	NA	NA	11 *** (wd)	NA	NA	Tank BY-110 is on the ferrocyanide watchlist. ** Temperature probes, liquid level devices, etc. *** Pits on tank, but none open
241-BY-111	SST	1-6 (i1, d1)	6, 7, 8 (i1, d1)	15 (d1)	11, 13, 14 (d1)	NA	NA	NA	6, 14 ** (wd)	NA	NA	11 *** (wd)	NA	NA	Tank BY-111 is on the ferrocyanide watchlist. ** Temperature probes, liquid level devices, etc. *** Pits on tank, but none open
241-BY-112	SST	1-6 (i1, d1)	6, 7, 8 (i1, d1)	15 (d1)	11, 13, 14 (d1)	NA	NA	NA	6, 14 ** (wd)	NA	NA	11 *** (wd)	NA	NA	Tank BY-112 is on the ferrocyanide watchlist. ** Temperature probes, liquid level devices, etc. *** Pits on tank, but none open
241-BY-302	Compressor building	NA	NA	NA	8 (wd)	NA	NA	1, 2, 3, 5 (wd)	4, 8, 10, 11, 14, 16 (wd)	2, 4 (wd)	NA	NA	6, 8 (wd)	3, 6 (wd)	241-BY-302 replaced with a new compressor skid. These hazards refer to the new compressor skid.
241-BYR-152	Diversion box	NA	NA	NA	NA	NA	NA	NA	NA	NA	NA	NA	NA	NA	All diversion boxes are isolated and weather covered (rb, wd)
241-BYR-153	Diversion box	NA	NA	NA	NA	NA	NA	NA	NA	NA	NA	NA	NA	NA	All diversion boxes are isolated and weather covered (rb, wd)

Table D3.1-4-BY. TWRS Facility Hazard Identification. (6 sheets)

Facility	Type	A- Corrosive	B- Explosive/ Pyrophoric	C- Nuclear Criticality	D-Flammable Materials	E- Thermal Radiation	F- Chem. Rxtns.	G- Friction	H- Electrical	I- Kinetic- Rotation	J- Kinetic- Linear	K- Mass, Gravity, Height	L- Pressure- Volume	M- Thermal (except radiant)	Comments
Legend Boxes -->		Select applicable hazards from attached table and place corresponding hazard numbers in the boxes below.													Notes
241-BYR-155	Diversion box	NA	NA	NA	NA	NA	NA	NA	NA	NA	NA	NA	NA	NA	All diversion boxes are isolated and weather covered (rb, wd)
216-BY-201	IMUST rad contaminated	27 (no data) (d2)	no data (d2)	no data (d2)	no data (d2)	NA	NA	NA	no data available (d2)	NA	NA	NA	NA	NA	No information found on this IMUST.
241-BY-301	Instrument building	NA	NA	NA	NA	NA	NA	NA	NA	NA	NA	NA	NA	NA	241-BY-301 abandoned, replaced by 254-BY and 244-B Instrument Buildings.
	Satellite accumulation area	NA	NA	NA	NA	NA	NA	NA	NA	NA	NA	NA	NA	NA	BY Farm shares a satellite accumulation area with BX Farm.
241-BYR-154	Diversion Box	NA	NA	NA	NA	NA	NA	NA	NA	NA	NA	NA	NA	NA	All diversion boxes are isolated and weather covered (rb, wd)
254-BY	Instrument Building	NA	NA	NA	8 (wd)	NA	NA	NA	3, 4, 8, 11, 14, 16 (wd)	NA	NA	NA	NA	3, 6 (wd)	NA

Table D3.1-4-BY. TWRS Facility Hazard Identification. (6 sheets)

Facility	Type	A-Corrosive	B-Explosive/ Pyrophoric	C-Nuclear Criticality	D-Flammable Materials	E-Thermal Radiation	F-Chem. Rxtns.	G-Friction	H-Electrical	I-Kinetic-Rotation	J-Kinetic-Linear	K-Mass, Gravity, Height	L-Pressure-Volume	M-Thermal (except radiant)	Comments
Legend Boxes ->		Select applicable hazards from attached table and place corresponding hazard numbers in the boxes below.													Notes
	Valve Pit	NA	NA	NA	NA	NA	NA	NA	NA	NA	NA	NA	NA	NA	Valve pit is isolated and weather covered (rb, wd)

(d1) = OSD-T-151-00013, 1996, Operating Specifications for Single-Shell Waste Storage Tanks, Rev. D-10, Westinghouse Hanford Company, Richland, Washington.
(d2) = WHC-EP-0861, 1995, Status Report for Inactive Miscellaneous Underground Storage Tanks at Hanford Site 200 Areas, Rev. 0, Westinghouse Hanford Company, Richland, Washington.
(d3) = WHC-EP-0182, 1995, Waste Tank Summary Report for Month Ending December 31, 1995, Rev. 93, Westinghouse Hanford Company, Richland, Washington.
(d4) = WHC-SD-WM-ISB-001, 1993, Hanford Site Tank Farm Facilities Interim Safety Basis, Rev. 0, Westinghouse Hanford Company, Richland, Washington.
(d5) = OSD-T-151-00030, 1996, Operating Specifications for Watch List Tanks, Rev. B-17, Westinghouse Hanford Company, Richland, Washington.
(i1) = Interview with cognizant engineer, Randy L. Powers, 4/3/96
(wd) = Walkdown of BY Farm, 4/5/96, David A. Bragg, Randy L. Powers, PK Brockman, and S Brewe
(rb) = East Area Tank Farms routing board status, 4/10/96.

Table D3.1-4-C. TWRS Facility Hazard Identification. (7 sheets)

Facility	Type	A- Corrosive	B- Explosive/ Pyrophoric	C- Nuclear Criticality	D-Flammable Materials	E- Thermal Radiation	F- Chem. Rxtns.	G- Friction	H- Electrical	I- Kinetic- Rotation	J- Kinetic- Linear	K- Mass, Gravity, Height	L- Pressure- Volume	M- Thermal (except radiant)	Comments
Legend Boxes ->		Select applicable hazards from attached table and place corresponding hazard numbers in the boxes below.													Notes
C FARM		NA	NA	NA	9 (wd)	NA	NA	NA	3, 4, 6, 16, 18 (wd)	NA	5 * (wd)	2, 3, 15 **, 16 (wd)	5, 12 *** (fire hydrant and pressure testing of transfer lines) ** (wd)	NA	* Abandoned crane in farm, also crane present for construction activities ** Gas bottles for PCM1B, also in construction area and near FIC on tank C-105. Raw water hose (insulated and heat traced) lying on the ground from Control Building to Service Pit. Excavation associated with construction near C-106 (wd) *** Transfer lines are pressure tested before use (90-110 psi) (i3). Only tanks C-102 and C-103 are on the organic watch list. Only C-106 is a high heat tank. Tanks C-108, C-109, C-111, and C-112 are on the ferrocyanide watchlist. No tanks on hydrogen watchlist, but tanks C-104 and C-107 have been recommended for addition to the flammable gas watchlist. (d3, d5)

Table D3.1-4-C. TWRS Facility Hazard Identification. (7 sheets)

Facility	Type	A- Corrosive	B- Explosive/ Pyrophoric	C- Nuclear Criticality	D-Flammable Materials	E- Thermal Radiation	F- Chem. Rxtns.	G- Friction	H- Electrical	I- Kinetic- Rotation	J- Kinetic- Linear	K- Mass, Gravity, Height	L- Pressure- Volume	M- Thermal (except radiant)	Comments
Legend Boxes -->		Select applicable hazards from attached table and place corresponding hazard numbers in the boxes below.													Notes
241-C-101	SST	1-6 (d1, i1)	6, 7, 8 (d1, i1)	15 (d1)	11,13, 14 (d1)	NA	NA	NA	6, 14 (wd)	NA	NA	11 ** (wd)	NA	NA	** All tanks have pits that are covered (no open pits, not a hazard)
241-C-102	SST	1-6 (d1, i1)	6, 7, 8 (d1, i1)	15 (d1)	11,13, 14 * (d1)	NA	NA	5 (wd)	6, 9, 10, 14 (wd)	2, 3 (wd)	NA	11 ** (wd)	NA	NA	* Tank C-102 is on the organic watch list. Not on hydrogen watchlist (d3) ** All tanks have pits that are covered (no open pits, not a hazard) Supplied fresh air required to get near C-102 because of the potential for noxious vapor exposure.
241-C-103	SST	1-6 (d1, i1)	6, 7, 8 (d1, i1)	15 (d1)	11,13, 14 * (d1)	NA	NA	5 (wd)	6, 9, 10, 14 (wd)	2, 3 (wd)	NA	11 ** (wd)	NA	NA	* Tanks C-103 is on the organic watch list. Not on hydrogen watchlist (d3) ** All tanks have pits that are covered (no open pits, not a hazard) Supplied fresh air required to get near C-103 because of the potential for noxious vapor exposure.

Table D3.1-4-C. TWRS Facility Hazard Identification. (7 sheets)

Facility	Type	A-Corrosive	B-Explosive/ Pyrophoric	C-Nuclear Criticality	D-Flammable Materials	E-Thermal Radiation	F-Chem. Rxtns.	G-Friction	H-Electrical	I-Kinetic-Rotation	J-Kinetic-Linear	K-Mass, Gravity, Height	L-Pressure-Volume	M-Thermal (except radient)	Comments
Legend Boxes -->		Select applicable hazards from attached table and place corresponding hazard numbers in the boxes below.													Notes
241-C-104	SST	1-6 (d1, i1)	6, 7, 8 (d1, i1)	15 (d1)	11,13, 14 * (d1)	NA	NA	NA	6, 14 (wd)	NA	NA	11 ** (wd)	NA	NA	* Tank C-104 has been recommended for addition to the flammable gas watchlist (d5) ** All tanks have pits that are covered (no open pits, not a hazard)
241-C-105	SST	1-6 (d1, i1)	6, 7, 8 (d1, i1)	15 (d1)	11,13, 14 (d1)	NA	NA	5 (wd)	6, 9, 10, 14 (wd)	2, 3 (wd)	NA	11 ** (wd)	NA	NA	** All tanks have pits that are covered (no open pits, not a hazard)
241-C-106	SST	1-6 * (d1, i1)	6, 7, 8 (d1, i1)	15 (d1)	11,13, 14 (d1)	NA	NA	5 (wd)	6, 9, 10, 14 (wd)	2, 3 (wd)	NA	11 ** (wd)	NA	NA	* Tank C-106 is a high heat tank. (d3) ** All tanks have pits that are covered (no open pits, not a hazard) Many transient hazards associated with construction activities (high voltage, gas bottles, ditches/excavations, welding equipment, etc) (wd)
241-C-107	SST	1-6 (d1, i1)	6, 7, 8 (d1, i1)	15 (d1)	11,13, 14 * (d1)	NA	NA	5 (wd)	6, 9, 10, 14 (wd)	2, 3 (wd)	NA	11 ** (wd)	NA	NA	* Tank C-107 has been recommended for addition to flammable gas watchlist (d5) ** All tanks have pits that are covered (no open pits, not a hazard)

Table D3.1-4-C. TWRS Facility Hazard Identification. (7 sheets)

Facility	Type	A- Corrosive	B- Explosive/ Pyrophoric	C- Nuclear Criticality	D-Flammable Materials	E- Thermal Radiation	F- Chem. Rxtns.	G- Friction	H- Electrical	I- Kinetic- Rotation	J- Kinetic- Linear	K- Mass, Gravity, Height	L- Pressure- Volume	M- Thermal (except radiant)	Comments
Legend Boxes -->		Select applicable hazards from attached table and place corresponding hazard numbers in the boxes below.													Notes
241-C-108	SST	1-6 (d1, i1)	6, 7, 8 (d1, i1)	15 (d1)	11,13, 14 (d1)	NA	NA	NA	6, 14 (wd)	NA	NA	11 ** (wd)	NA	NA	Tank C-108 is a ferrocyanide watchlist tank (d5) ** All tanks have pits that are covered (no open pits, not a hazard)
241-C-109	SST	1-6 (d1, i1)	6, 7, 8 (d1, i1)	15 (d1)	11,13, 14 (d1)	NA	NA	NA	6, 14 (wd)	NA	NA	11 ** (wd)	NA	NA	Tank C-109 is a ferrocyanide watchlist tank (d5) ** All tanks have pits that are covered (no open pits, not a hazard)
241-C-110	SST	1-6 (d1, i1)	6, 7, 8 (d1, i1)	15 (d1)	11,13, 14 (d1)	NA	NA	5 (wd)	6, 9, 10, 14 (wd)	2, 3 (wd)	NA	11 ** (wd)	NA	NA	** All tanks have pits that are covered (no open pits, not a hazard)
241-C-111	SST	1-6 (d1, i1)	6, 7, 8 (d1, i1)	15 (d1)	11,13, 14 (d1)	NA	NA	NA	6, 14 (wd)	NA	NA	11 ** (wd)	NA	NA	Tank C-111 is a ferrocyanide watchlist tank (d5) ** All tanks have pits that are covered (no open pits, not a hazard)
241-C-112	SST	1-6 (d1, i1)	6, 7, 8 (d1, i1)	15 (d1)	11,13, 14 (d1)	NA	NA	5 (wd)	6, 9, 10, 14 (wd)	2, 3 (wd)	NA	11 ** (wd)	NA	NA	Tank C-112 is a ferrocyanide watchlist tank (d5) ** All tanks have pits that are covered (no open pits, not a hazard)
241-C-201	SST	1-6 (d1, i1)	6, 7, 8 (d1, i1)	15 (d1)	11,13, 14 (d1)	NA	NA	NA	6, 14 (wd)	NA	NA	11 ** (wd)	NA	NA	** All tanks have pits that are covered (no open pits, not a hazard)

Table D3.1-4-C. TWRS Facility Hazard Identification. (7 sheets)

Facility	Type	A-Corrosive	B-Explosive/ Pyrophoric	C-Nuclear Criticality	D-Flammable Materials	E-Thermal Radiation	F-Chem. Rxtns.	G-Friction	H-Electrical	I-Kinetic-Rotation	J-Kinetic-Linear	K-Mass, Gravity, Height	L-Pressure-Volume	M-Thermal (except radiant)	Comments
Legend Boxes ->		Select applicable hazards from attached table and place corresponding hazard numbers in the boxes below.													Notes
241-C-202	SST	1-6 (d1, i1)	6, 7, 8 (d1, i1)	15 (d1)	11,13, 14 (d1)	NA	NA	NA	6, 14 (wd)	NA	NA	11 ** (wd)	NA	NA	** All tanks have pits that are covered (no open pits, not a hazard)
241-C-203	SST	1-6 (d1, i1)	6, 7, 8 (d1, i1)	15 (d1)	11,13, 14 (d1)	NA	NA	NA	6, 14 (wd)	NA	NA	11 ** (wd)	NA	NA	** All tanks have pits that are covered (no open pits, not a hazard)
241-C-204	SST	1-6 (d1, i1)	6, 7, 8 (d1, i1)	15 (d1)	11,13, 14 (d1)	NA	NA	NA	6, 14 (wd)	NA	NA	11 ** (wd)	NA	NA	** All tanks have pits that are covered (no open pits, not a hazard)
241-CR-271	Control room	NA	NA	NA	8 (wd)	NA	NA	NA	3,4, 8, 11, 14, 16 (wd)	NA	NA	10 * (wd)	NA	3, 6 (wd)	* Ladder was outside of building (wd)
244-CR	CR-Vault	2,6 (salt well pumping waste) (d4)	6,7,8 (same as tank waste)	15 (same as tank waste)	11, 13, 14 (same as tank waste)	NA	NA	3,5 (c7)	4, 6, 9, 10, 11 (d4, c7)	2,3,4 (d4, c7)	NA	11,14 * (d4, wd)	NA	3, 6 (d4)	* Vault has pits which are covered and the vault itself is covered
241-C-151	Diversion box	NA	NA	NA	NA	NA	NA	NA	NA	NA	NA	NA	NA	NA	All diversion boxes are isolated and weather covered (wd, rb)
241-CR-151	Diversion box	NA	NA	NA	NA	NA	NA	NA	NA	NA	NA	NA	NA	NA	All diversion boxes are isolated and weather covered (wd, rb)
241-C-152	Diversion box	NA	NA	NA	NA	NA	NA	NA	NA	NA	NA	NA	NA	NA	All diversion boxes are isolated and weather covered (wd, rb)
241-CR-152	Diversion box	NA	NA	NA	NA	NA	NA	NA	NA	NA	NA	NA	NA	NA	All diversion boxes are isolated and weather covered (wd, rb)

Table D3.1-4-C. TWRS Facility Hazard Identification. (7 sheets)

Facility	Type	A-Corrosive	B-Explosive/ Pyrophoric	C-Nuclear Criticality	D-Flammable Materials	E-Thermal Radiation	F-Chem. Rxtns.	G-Friction	H-Electrical	I-Kinetic-Rotation	J-Kinetic-Linear	K-Mass, Gravity, Height	L-Pressure-Volume	M-Thermal (except radiant)	Comments
Legend Boxes -->		Select applicable hazards from attached table and place corresponding hazard numbers in the boxes below.													Notes
241-C-153	Diversion box	NA	NA	NA	NA	NA	NA	NA	NA	NA	NA	NA	NA	NA	All diversion boxes are isolated and weather covered (wd, rb)
241-CR-153	Diversion box	NA	NA	NA	NA	NA	NA	NA	NA	NA	NA	NA	NA	NA	All diversion boxes are isolated and weather covered (wd, rb)
241-C-154	Diversion box	NA	NA	NA	NA	NA	NA	NA	NA	NA	NA	NA	NA	NA	Diversion box shown as isolated on the routing board (rb) Believed to be buried near Hot Sem Works, 201-C (i2)
241-C-252	Diversion box	NA	NA	NA	NA	NA	NA	NA	NA	NA	NA	NA	NA	NA	All diversion boxes are isolated and weather covered (wd, rb)
241-C-301C	IMUST rad contaminated	2 (d2)	6 (d2)	15 (d2)	11, 13 (d2)	NA	NA	NA	4 * (wd)	NA	NA	NA	NA	NA	* heated vapor probe
241-C-801	Process storage building	unknown	unknown	unknown	unknown	unknown	NA	unknown	unknown	unknown	5 (H-2-4569	2, 3, 11, 12 (H-2-4569)	unknown	unknown	Called the Cesium Load-Out Facility. Building not entered during walkdown because of construction. Building currently owned by Bechtel, used as a storage building (i2).
	Satellite accumulation area	1,2,4 * (wd)	NA	NA	2, 6, 10, 17 *	NA	NA	NA	NA	NA	NA	NA	NA	NA	*Satellite accumulation boxes were not opened during walkdowns. Hazards listed are the expected, potential hazards.

Table D3.1-4-C. TWRS Facility Hazard Identification. (7 sheets)

Facility	Type	A- Corrosive	B- Explosive/ Pyrophoric	C- Nuclear Criticality	D-Flammable Materials	E- Thermal Radiation	F- Chem. Rxtns.	G- Friction	H- Electrical	I- Kinetic- Rotation	J- Kinetic- Linear	K- Mass, Gravity, Height	L- Pressure- Volume	M- Thermal (except radiant)	Comments
Legend Boxes -->		Select applicable hazards from attached table and place corresponding hazard numbers in the boxes below.													Notes
241-C-601	Compressor building	NA	NA	NA	8 (wd)	NA	NA	1,2,3,5 (wd)	4, 8, 10, 11, 14, 16 (wd)	2, 4 (wd)	NA	NA	6, 8 (wd)	3, 6 (wd)	NA
241-C	Valve pit	NA	NA	NA	NA	NA	NA	NA	4, 11 (c1)	NA	NA	11 * (wd)	NA	3 (c1)	* Valve pit is covered. Located within the fresh air zone between C-102 and C-103.
	Water service pit	NA	NA	NA	NA	NA	NA	NA	NA	NA	NA	11 *, 16 (wd)	NA	NA	* Service pit is covered, but has a large open hole (4-5" in diameter) (wd)
296-P-16	Vent System for C-105 and C-106 tanks	27 (tank condensate)	6, 7, 87 (tank condensate)	NA	11,13, 147 (tank waste condensate)	NA	NA	3,5 (c2)	4, 10, 11, 14 (c2, d4)	2,4 (c2, d4)	NA	NA	NA	3 (d4)	Composition of condensate unknown. May not have same potential hazards as the tank contents. No data available.

(c1) = H-2-73876
(c2) = H-2-818561, Sheet 6.
(c7) = H-2-41746
(d1) = OSD-T-151-00013, 1996, Operating Specifications for Single-Shell Waste Storage Tanks, Rev. D-10, Westinghouse Hanford Company, Richland, Washington.
(d2) = WHC-SD-EN-ES-040, 1994, Engineering Study of 50 Miscellaneous Inactive Underground Radioactive Waste Tanks Located at the Hanford Site, Washington, Rev. 0, Westinghouse Hanford Company, Richland, Washington.
(d3) = WHC-EP-0182, 1995, Waste Tank Summary Report for Month Ending December 31, 1995, Rev. 93, Westinghouse Hanford Company, Richland, Washington.
(d4) = WHC-SD-WM-ISB-001, 1993, Hanford Site Tank Farm Facilities Interim Safety Basis, Rev. 0, Westinghouse Hanford Company, Richland, Washington.
(d5) = OSD-T-151-00030, 1996, Operating Specification for Watch List Tanks, Rev. B-17, Westinghouse Hanford Company, Richland, Washington.
(i1) = Information from Randy L. Powers, cognizant engineer, 4/3/96
(i2) = Information from David E. Bowers, 5/7/96
(i3) = Information from David A. Bragg, design authority, 5/13/96
(rb) = 200 East Area Tank Farms routing board status, 4/10/96
(wd) = Walkdown of C Farm, 4/9/96, David A. Bragg, Randy L. Powers, D. Aquilina, and S. Brewe

This page intentionally left blank.

Table D3.1-4-S. TWRS Facility Hazard Identification. (5 sheets)

Facility	Type	A- Corrosive	B- Explosive/ Pyrophoric	C- Nuclear Criticality	D-Flammable Materials	E- Thermal Radiation	F- Chem. Rxtns.	G- Friction	H- Electrical	I- Kinetic- Rotation	J- Kinetic- Linear	K- Mass, Gravity, Height	L- Pressure- Volume	M- Thermal (except radiant)	Comments
Legend Boxes ->		Select applicable hazards from attached table and place corresponding hazard numbers in the boxes below.													Notes
S FARM		NA	7 * (wd)	NA	8, 10 *** 14 * (wd)	NA	NA	NA	4, 5, 6, 18 ** (wd)	NA	1 *** (wd)	NA	NA	5 **** (wd)	* 2 propane tanks northeast corner ** Power lines run south of the farm Old exhausters near S-101 and S-110 are under locked wooden structures. *** Sampling truck located on tank S-110 **** SHMS on tanks S-102, S-111, S-112
241-S-101	SST	2 (i3)	6,7,8 (d6)	15 (d6)	11, 13, 14 (d6)	NA	NA	5, 7 * (wd)	6, 9, 10, 14 * (wd)	NA	NA	11 *** (wd)	6 * (wd)	NA	* Saltwell pump skid, includes water and air tanks. Temperature probes, liquid level devices, etc. *** Pits on tank, but none open.
241-S-102	SST	2 (i3)	6,7,8 (d6)	15 (d6)	11, 13, 14 **** ++ (d1, d6)	NA	NA	5 (wd)	6, 9, 10,14 * (wd)	2,3 (wd)	NA	11 *** (wd)	NA	NA	* SHMS, temperature probes, liquid level devices, etc. *** Pits on tank, but none open. **** Must have ammonia monitor or supplied air ++ Hydrogen and organics watch list tank.
241-S-103	SST	2 (i3)	6,7,8 (d6)	15 (d6)	11, 13, 14 (d6)	NA	NA	NA	6, 14 * (wd)	NA	NA	11 *** (wd)	NA	NA	* Temperature probes, liquid level devices, etc. *** Pits on tank, but none open.

Table D3.1-4-S. TWRS Facility Hazard Identification. (5 sheets)

Facility	Type	A-Corrosive	B-Explosive/ Pyrophoric	C-Nuclear Criticality	D-Flammable Materials	E-Thermal Radiation	F-Chem. Rxtns.	G-Friction	H-Electrical	I-Kinetic-Rotation	J-Kinetic-Linear	K-Mass, Gravity, Height	L-Pressure-Volume	M-Thermal (except radiant)	Comments
Legend Boxes ->		Select applicable hazards from attached table and place corresponding hazard numbers in the boxes below.													Notes
241-S-104	SST	2 (i3)	6,7,8 (d6)	15 (d6)	11, 13, 14 (d6)	NA	NA	NA	6, 14 * (wd)	NA	NA	11 *** (wd)	NA	NA	* Temperature probes, liquid level devices, etc. *** Pits on tank, but none open.
241-S-105	SST	2 (i3)	6,7,8 (d6)	15 (d6)	11, 13, 14 (d6)	NA	NA	NA	6, 14 * (wd)	NA	NA	11 *** (wd)	NA	NA	* Temperature probes, liquid level devices, etc. *** Pits on tank, but none open.
241-S-106	SST	2 (i3)	6,7,8 (d6)	15 (d6)	11, 13, 14 (d6)	NA	NA	5, 7 * (wd)	6, 9, 10,14 * (wd)	2,3 (wd)	NA	11 *** (wd)	6 (wd)	NA	* Saltwell pump skid, includes water and air tanks. Temperature probes, liquid level devices, etc. *** Pits on tank, but none open.
241-S-107	SST	2 (i3)	6,7,8 (d6)	15 (d6)	11, 13, 14 (d6)	NA	NA	5, 7 * (wd)	6, 9, 10, 14 * (wd)	2,3 (wd)	NA	11 *** (wd)	6 (wd)	NA	* Saltwell pump skid, includes water and air tanks. Temperature probes, liquid level devices, etc. *** Pits on tank, but none open.
241-S-108	SST	2 (i3)	6,7,8 (d6)	15 (d6)	11, 13, 14 (d6)	NA	NA	5, 7 (wd)	6, 9, 10, 14 * (wd)	2,3 (wd)	NA	11 *** (wd)	6 (wd)	NA	* Saltwell pump skid, includes water and air tanks, and flammable gas monitor Temperature probes, liquid level devices, etc. *** Pits on tank, but none open.

Table D3.1-4-S. TWRS Facility Hazard Identification. (5 sheets)

Facility	Type	A- Corrosive	B- Explosive/ Pyrophoric	C- Nuclear Criticality	D-Flammable Materials	E- Thermal Radiation	F- Chem. Rxtns.	G- Friction	H- Electrical	I- Kinetic- Rotation	J- Kinetic- Linear	K- Mass, Gravity, Height	L- Pressure- Volume	M- Thermal (except radiant)	Comments
Legend Boxes ->		Select applicable hazards from attached table and place corresponding hazard numbers in the boxes below.													Notes
241-S-109	SST	2 (i3)	6,7,8 (d6)	15 (d6)	11, 13, 14 (d6)	NA	NA	5, 7 * (wd)	6, 9, 10, 14 * (wd)	2,3 (wd)	NA	11 *** (wd)	6 (wd)	NA	* Saltwell pump skid, includes water and air tanks. Temperature probes, liquid level devices, etc. *** Pits on tank, but none open.
241-S-110	SST	2 (i3)	6,7,8 (d6)	15 (d6)	10 **, 11, 13, 14 (d6)	NA	NA	5, 7 * (wd)	6, 9, 10, 14 * (wd)	2,3 (wd)	NA	11 *** (wd)	6 (wd)	NA	* Saltwell pump skid, includes water and air tanks,and flammable gas monitor. ** Sampling truck *** Pits on tank, but none open.
241-S-111	SST	2 (i3)	6,7,8 (d6)	15 (d6)	11, 13, 14 + + (d1, d6)	NA	NA	5 (wd)	6, 9, 10, 14 * (wd)	2,3 (wd)	NA	11 *** (wd)	NA	NA	* SHMS, temperature probes, liquid level devices, etc. *** Pits on tank, but none open. + + Hydrogen and organics watch list tank.
241-S-112	SST	2 (i3)	6+ +,7,8 (d1, d6)	15 (d6)	11, 13, 14 + +(d1, d6)	NA	NA	5 (wd)	6, 9, 10, 14 * (wd)	2,3 (wd)	NA	11 *** (wd)	NA	NA	* SHMS, temperature probes, liquid level devices, etc. *** Pits on tank, but none open. + + Hydrogen watch list tank.
241-S-304	Catch tank	Unknown **	Unknown **	Unknown **	Unknown **	NA	NA	NA	NA	NA	NA	NA	NA	NA	** No data
216-S-25	Crib	NA	NA	NA	NA	NA	NA	NA	NA	NA	NA	NA	NA	NA	NA (D8)
216-S-26	Crib	NA	NA	NA	NA	NA	NA	NA	NA	NA	NA	NA	NA	NA	NA (D8)

Table D3.1-4-S. TWRS Facility Hazard Identification. (5 sheets)

Facility	Type	A- Corrosive	B- Explosive/ Pyrophoric	C- Nuclear Criticality	D-Flammable Materials	E- Thermal Radiation	F- Chem. Rxtns.	G- Friction	H- Electrical	I- Kinetic- Rotation	J- Kinetic- Linear	K- Mass, Gravity, Height	L- Pressure- Volume	M- Thermal (except radiant)	Comments
Legend Boxes -->		Select applicable hazards from attached table and place corresponding hazard numbers in the boxes below.													Notes
244-S	DCRT catch station	1-6 (d6) Same as tank waste	6, 7, 8, (d6) Same as tank waste	15 (d6)	11, 13, 14 (d6)	NA	NA	3, 5 (d2, wd)	4, 6, 9, 11 (wd)	2, 3, 4 (wd)	NA	11 * (wd)	NA	3, 6 (wd	* Catch station has pits that are covered
240-S-152	Diversion box	NA	NA	NA	NA	NA	NA	NA	NA	NA	NA	NA	NA	NA	Weather covered
241-S-151	Diversion box	1-6 Receives waste from different facilities going to SY Farm.	6, 7, 8, (d6) Same as tank waste	NA	11, 13, 14 (d6)	NA	NA	NA	4 (wd)	NA	NA	11 (wd)	NA	NA	NA
241-S-152	Diversion box	NA	NA	NA	NA	NA	NA	NA	NA	NA	NA	NA	NA	NA	Weather covered
240-S-302	IMUST rad contaminated	2 (d8)	NA	15 (d8)	13 (d8)	NA	NA	NA	NA	NA	NA	13 (d8)	NA	NA	NA
241-S-302A	IMUST rad contaminated	2 (d8)	NA	15 (d8)	13 (d8)	NA	NA	NA	4 *	NA	NA	13 (d8)	NA	NA	* Leak detection-FIC gauge
241-S-302B	IMUST rad contaminated	2 (d8)	6 (d8)	15 (d8)	13 (d8)	NA	NA	NA	NA	NA	NA	13 (d8)	NA	NA	NA
241-S-A	Valve pit	Unknown	Unknown	NA	Unknown	NA	NA	NA	4, 14 (wd)	NA	NA	11 (wd)	NA	6 (wd)	NA
241-S-B	Valve pit	Unknown	Unknown	NA	Unknown	NA	NA	NA	4, 14 (wd)	NA	NA	11 (wd)	NA	6 (wd)	NA
241-S-C	Valve pit	Unknown	Unknown	NA	Unknown	NA	NA	NA	4, 14 (wd)	NA	NA	11 (wd)	NA	6 (wd)	NA
241-S-D	Valve pit	Unknown	Unknown	NA	Unknown	NA	NA	NA	4, 14 (wd)	NA	NA	11 (wd)	NA	6 (wd)	NA
COB-1 through COB-18, COB 51-1, COB 52-1	Clean out boxes	2 * (i3)	6, 7, 8, (d6)	NA	11, 13, 14 * (d1)	NA	NA	NA	4, 6, 13 (wd)	NA	NA	11 (wd)	NA	3, 6 (wd)	* Same waste as tank waste.

Table D3.1-4-S. TWRS Facility Hazard Identification. (5 sheets)

Facility	Type	A- Corrosive	B- Explosive/ Pyrophoric	C- Nuclear Criticality	D-Flammable Materials	E- Thermal Radiation	F- Chem. Rxtns.	G- Friction	H- Electrical	I- Kinetic- Rotation	J- Kinetic- Linear	K- Mass, Gravity, Height	L- Pressure- Volume	M- Thermal (except radiant)	Comments
Legend Boxes ->		Select applicable hazards from attached table and place corresponding hazard numbers in the boxes below.													Notes
12 inch	Vertical storage units (6)	NA	NA	NA	NA	NA	NA	NA	NA	NA	NA	NA	NA	NA	NA
	Satellite Accumulation Area	6 * (wd)	NA	NA	1, 2, 9, 13 * (wd)	NA	NA	NA	NA	NA	NA	NA	NA	NA	* Mixed waste storage could have many different constituents.

(d1) = WHC-EP-0182, 1995, Waste Tank Summary Report for the Month Ending December 31, 1995, Rev 93, Westinghouse Hanford Company, Richland, Washington.
(d6) = OSD-T-151-00013, 1996, Operating Specifications for Single-Shell Waste Storage Tanks, Rev. D-10, Westinghouse Hanford Company, Richland, Washington.
(d8) = Environmental Sites Database (WIDS)
(wd) = Facility walkdown, 4/22/96, L. Baricevic, J. Doeler, S. Gwin, D. Mendoza

This page intentionally left blank.

Table D3.1-4-SX. TWRS Facility Hazard Identification. (5 sheets)

Facility	Type	A- Corrosive	B- Explosive/ Pyrophoric	C- Nuclear Criticality	D-Flammable Materials	E- Thermal Radiation	F- Chem. Rxtns.	G- Friction	H- Electrical	I- Kinetic- Rotation	J- Kinetic- Linear	K- Mass, Gravity, Height	L- Pressure- Volume	M- Thermal (except radiant)	Comments
Legend Boxes -->		Select applicable hazards from attached table and place corresponding hazard numbers in the boxes below. Mark any boxes which are not applicable NA. Provide references for each entry.													Notes
SX FARM		NA	NA	NA	8, 14	NA	NA	NA	4, 5, 6, 18 (wd)	Na	Na	3, 7 * (wd)	5 ** (wd)	6 (wd)	* Crane and hoist ** SHMS gas bottles on tanks 101 through 106 and 109.
241-SX-101	SST	2 (i2)	6, 7, 8 (d7)	15 (d7)	11, 13, 14 (d7)	5	NA	5 * (wd)	6, 10, 14 ** (wd)	2 * (wd)	NA	11 *** (wd)	NA	NA	* SHMS, hydrogen watch list tank. ** temperature probes, liquid level devices, etc. *** Pits on tank but none open.
241-SX-102	SST	2 (i2)	6, 7, 8 (d7)	15 (d7)	11, 13, 14 (d7)	NA	NA	5 * (wd)	6, 10, 14 ** (wd)	2 * (wd)	NA	11 *** (wd)	NA	NA	* SHMS, hydrogen watch list tank. ** temperature probes, liquid level devices, etc. *** Pits on tank but none open.
241-SX-103	SST	2 (i2)	6, 7, 8 (d7)	15 (d7)	11,13, 14 (d7) ****	NA	NA	5 * (wd)	6, 10, 14 ** (wd)	2 * (wd)	NA	11 *** (wd)	NA	NA	* SHMS, hydrogen watch list tank. ** Temperature probes, liquid level devices, etc. *** Pits on tank but none open. **** Organic watch list tank.
241-SX-104	SST	2 (i2)	6, 7, 8 (d7)	15 (d7)	11, 13, 14 (d7)	NA	NA	5 * (wd)	6, 10, 14 ** (wd)	2 * (wd)	NA	11 *** (wd)	NA	NA	* SHMS, hydrogen watch list tank ** Temperature probes, liquid level devices, etc. *** Pits on tank but none open.

Table D3.1-4-SX. TWRS Facility Hazard Identification. (5 sheets)

Facility	Type	A- Corrosive	B- Explosive/ Pyrophoric	C- Nuclear Criticality	D-Flammable Materials	E- Thermal Radiation	F- Chem. Rxtns.	G- Friction	H- Electrical	I- Kinetic- Rotation	J- Kinetic- Linear	K- Mass, Gravity, Height	L- Pressure- Volume	M- Thermal (except radiant)	Comments
Legend Boxes -->		Select applicable hazards from attached table and place corresponding hazard numbers in the boxes below. Mark any boxes which are not applicable NA. Provide references for each entry.													Notes
241-SX-105	SST	2 (i2)	6, 7, 8 (d7)	15 (d7)	11, 13, 14 (d7) ****	NA	NA	5 * (wd)	6, 10, 14 ** (wd)	2 * (wd)	NA	11 *** (wd)	NA	NA	* SHMS, hydrogen watch list tank. ** Temperature probes, liquid level devices, etc. *** Pits on tank but none open. **** Organic watch list tank.
241-SX-106	SST	2 (i2)	6, 7, 8 (d7)	15 (d7)	11, 13, 14 (d7)	NA	NA	5 * (wd)	6, 10, 14 ** (wd)	2 * (wd)	NA	11 *** (wd)	NA	NA	* SHMS, hydrogen watch list tank. ** Temperature probes, liquid level devices, etc. *** Pits on tank but none open.
241-SX-107	SST	2 (i2) 5 **** (d1)	6, 7, 8 (d7)	15 (d7)	11, 13, 14 (d7)	NA	NA	NA	6, 14 ** (wd)	NA	NA	11 *** (wd)	NA	NA	** Temperature probes, liquid level devices, etc. *** Pits on tank but none open. **** High heat tank
241-SX-108	SST	2 (i2) 5 **** (d1)	6, 7, 8 (d7)	15 (d7)	11, 13, 14 (d7)	NA	NA	NA	6, 14 ** (wd)	NA	NA	11 *** (wd)	NA	NA	** Temperature probes, liquid level devices, etc. *** Pits on tank but none open. **** High heat tank

Table D3.1-4-SX. TWRS Facility Hazard Identification. (5 sheets)

Facility	Type	A- Corrosive	B- Explosive/ Pyrophoric	C- Nuclear Criticality	D-Flammable Materials	E- Thermal Radiation	F- Chem. Rxtns.	G- Friction	H- Electrical	I- Kinetic- Rotation	J- Kinetic- Linear	K- Mass, Gravity, Height	L- Pressure- Volume	M- Thermal (except radiant)	Comments
Legend Boxes -->		Select applicable hazards from attached table and place corresponding hazard numbers in the boxes below. Mark any boxes which are not applicable NA. Provide references for each entry.													Notes
241-SX-109	SST	2 (i2) 5 **** (d1)	6, 7, 8 (d7)	15 (d7)	11, 13, 14 (d7)	NA	NA	5 * (wd)	6, 10, 14 ** (wd)	2 * (wd)	NA	11 *** (wd)	NA	NA	* SHMS, hydrogen watch list because tanks 1 through 6 vent through it. ** Temperature probes, liquid level devices, etc. *** Pits on tank but none open. **** High heat tank
241-SX-110	SST	2 (i2) 5 **** (d1)	6, 7, 8 (d7)	15 (d7)	11, 13, 14 (d7)	NA	NA	NA	6, 14 ** (wd)	NA	NA	11 *** (wd)	NA	NA	** Temperature probes, liquid level devices, etc. *** Pits on tank but none open. **** High heat tank
241-SX-111	SST	2 (i2) 5 **** (d1)	6, 7, 8 (d7)	15 (d7)	11, 13, 14 (d7)	NA	NA	NA	6, 14 ** (wd)	NA	NA	11 *** (wd)	NA	NA	** Temperature probes, liquid level devices, etc. *** Pits on tank but none open. **** High heat tank
241-SX-112	SST	2 (i2) 5 **** (d1)	6, 7, 8 (d7)	15 (d7)	11, 13, 14 (d7)	NA	NA	NA	6, 14 ** (wd)	NA	NA	11 *** (wd)	NA	NA	** Temperature probes, liquid level devices, etc. *** Pits on tank but none open. **** High heat tank
241-SX-113	SST	2 (i2)	6, 7, 8 (d7)	15 (d7)	11, 13, 14 (d7)	NA	NA	NA	6, 14 ** (wd)	NA	NA	11 *** (wd)	NA	NA	** Temperature probes, liquid level devices, etc. *** Pits on tank but none open.

Table D3.1-4-SX. TWRS Facility Hazard Identification. (5 sheets)

Facility	Type	A- Corrosive	B- Explosive/ Pyrophoric	C- Nuclear Criticality	D-Flammable Materials	E- Thermal Radiation	F- Chem. Rxtns.	G- Friction	H- Electrical	I- Kinetic- Rotation	J- Kinetic- Linear	K- Mass, Gravity, Height	L- Pressure- Volume	M- Thermal (except radiant)	Comments
Legend Boxes -->		Select applicable hazards from attached table and place corresponding hazard numbers in the boxes below. Mark any boxes which are not applicable NA. Provide references for each entry.													Notes
241-SX-114	SST	2 (i2) 5 **** (d1)	6, 7, 8 (d7)	15 (d7)	11, 13, 14 (d7)	NA	NA	NA	6, 14 ** (wd)	NA	NA	11 *** (wd)	NA	NA	** Temperature probes, liquid level devices, etc. *** Pits on tank but none open. **** High heat tank
241-SX-115	SST	2 (i2)	6, 7, 8 (d7)	15 (d7)	11, 13, 14 (d7)	NA	NA	NA	6, 14 ** (wd)	NA	NA	11 *** (wd)	NA	NA	** Temperature probes, liquid level devices, etc. ***Pits on tank but none open.
241SX-151	Diversion box	NA	NA	NA	NA	NA	NA	NA	NA	NA	NA	NA	NA	NA	Weather covered
241-SX-152	Diversion box	NA	NA	NA	NA	NA	NA	NA	NA	NA	NA	NA	NA	NA	Weather covered
241-SX-302	IMUST rad contaminated	1 - 6 (d12)	6, 7, 8 (d12)	NA	11, 13, 14 (d12)	NA	NA	NA	NA	NA	NA	NA	NA	NA	NA
	Lateral Wells (4)	NA	NA	NA	NA	NA	NA	NA	4, 6, 8, 13, 14 (wd)	NA	NA	11 (wd)	NA	NA	NA
241-SX-A 241-SX-B	Valve pit	Unknown	Unknown	NA	Unknown	NA	NA	NA	4, 14 (wd)	NA	NA	11 (wd)	NA	6 (wd)	NA
241-SX-271	Instrument building	NA	NA	NA	NA	NA	NA	NA	4, 8, 14 (wd)	NA	NA	NA	NA	6 (wd)	NA
241-SX-701	Compressor building	NA	NA	NA	NA	NA	NA	NA	4, 8, 14 (wd)	NA	NA	NA	NA	6 (wd)	Compressor building is out of service.
12 inch	Vertical storage units (21)	NA	NA	NA	NA	NA	NA	NA	NA	NA	NA	NA	NA	NA	Used to store riser plugs and miscellaneous tools
24 inch	Vertical storage unit	NA	NA	NA	NA	NA	NA	NA	NA	NA	NA	NA	NA	NA	Used to store riser plugs and miscellaneous tools

Table D3.1-4-SX. TWRS Facility Hazard Identification. (5 sheets)

Facility	Type	A-Corrosive	B-Explosive/ Pyrophoric	C-Nuclear Criticality	D-Flammable Materials	E-Thermal Radiation	F-Chem. Rxtns.	G-Friction	H-Electrical	I-Kinetic-Rotation	J-Kinetic-Linear	K-Mass, Gravity, Height	L-Pressure-Volume	M-Thermal (except radiant)	Comments
Legend Boxes -->		Select applicable hazards from attached table and place corresponding hazard numbers in the boxes below. Mark any boxes which are not applicable NA. Provide references for each entry.													Notes

(i2) = Interview with Suzanne Lindberg, 5/16/96

(d7) = OSD-T-151-00013, 1996, Operating Specifications for Single-Shell Waste Storage Tanks, Rev. D-10, Westinghouse Hanford Company, Richland, Washington.

(d12) = WHC-SD-EN-ES-040, 1994, Engineering Study of 50 Miscellaneous Inactive Underground Radioactive Waste Tanks Located at the Hanford Site, Washington, Rev. 0, Westinghouse Hanford Company, Richland, Washington.

(i3) = Interview with Suzanne Lindberg, 5/16/96

(wd) = Facility walkdown 4/22/96, L. Baricevic, J. Doeler, S. Gwin, D. Mendoza.

This page intentionally left blank.

Table D3.1-4-SY. TWRS Facility Hazard Identification. (2 sheets)

Facility	Type	A- Corrosive	B- Explosive/ Pyrophoric	C- Nuclear Criticality	D-Flammable Materials	E- Thermal Radiation	F- Chem. Rxtns.	G- Friction	H- Electrical	I- Kinetic- Rotation	J- Kinetic- Linear	K- Mass, Gravity, Height	L- Pressure- Volume	M- Thermal (except radiant)	Comments
Legend Boxes -->		Select applicable hazards from attached table and place corresponding hazard numbers in the boxes below.													Notes
SY FARM		NA	7 (wd)	NA	8 (wd)	NA	NA	2, 3, 5 * (wd)	1 +, 4, 6, 10, 14, 16, 19 ** (wd)	2, 4 (wd)	NA	NA	5, 6 **** (wd)	6 ***	+ Electrical backup battery trailer, batteries are gel filled. Outside fence north side. * K1, K1A, and K2 ventilation equipment. ** Stadium type lighting. *** Electrical wiring in farm. **** Gas bottles associated with SHMS on tanks SY-101 and SY-103, and bottles with sampling buildings.
241-SY-101	DST	2 (i2)	6+ +, 7, 8 (d1, d7, i5)	15 (d7)	11 + +, 13, 14 (d1, d7)	NA	NA	5 **** (wd)	4, 6, 9, 10, 14 (wd)	2, 3 (wd)	NA	11 ** (wd)	12 **** (wd)	NA	* mixer motor ** pits on tank, but not open *** SHMS and miscellaneous sampling gas bottles **** Blowout riser with three blowout plates ~ 3' X 3' + + Hydrogen watch list tank.
241-SY-102	DST	2 (i2)	6, 7, 8 (d7, i5)	15 (d7)	11, 13, 14 (d7)	NA	NA	NA	4, 6, 9, 10, 14 (wd)	NA	NA	11 ** (wd)	NA	NA	** Pits on tank, but not open
241-SY-103	DST	2 (i2)	6+ +, 7, 8 (d1, d7, i5)	15 (d7)	11 + +, 13, 14 (d1, d7)	NA	NA	5 *** (wd)	4, 6, 9, 10, 14 (wd)	NA	NA	11 ** (wd)	NA	NA	** Pits on tank, but not open 216-T-32 *** SHMS + + Hydrogen watch list tank.
241-SY-271-P1	Air compressor	NA	NA	NA	NA	NA	NA	1, 2, 3, 5 (wd)	4, 8, 10 (wd)	3, 4 (wd)	NA	NA	6 (wd)	NA	Air compressor

Table D3.1-4-SY. TWRS Facility Hazard Identification. (2 sheets)

Facility	Type	A- Corrosive	B- Explosive/ Pyrophoric	C- Nuclear Criticality	D-Flammable Materials	E- Thermal Radiation	F- Chem. Rxtns.	G- Friction	H- Electrical	I- Kinetic- Rotation	J- Kinetic- Linear	K- Mass, Gravity, Height	L- Pressure- Volume	M- Thermal (except radiant)	Comments
Legend Boxes -->		Select applicable hazards from attached table and place corresponding hazard numbers in the boxes below.													Notes
241-SY-1	Cleanout box	2 (i2)	6,7,8 (i5)	NA	11, 13, 14 (i5)	NA	NA	NA	4, 6, 13 (i5)	NA	NA	11	NA	3, 6 (i5)	* Same waste as tank waste
241-SY-2	Cleanout box	2 (i2)	6,7,8 (i5)	NA	11, 13, 14 (i5)	NA	NA	NA	4, 6, 13 (i5)	NA	NA	11	NA	3, 6 (i5)	* Same waste as tank waste
241-SY-3	Cleanout box	2 (i2)	6,7,8 (i5)	NA	11, 13, 14 (i5)	NA	NA	NA	4, 6, 13 (i5)	NA	NA	11	NA	3, 6 (i5)	* Same waste as tank waste
241-SY-4	Cleanout box	2 (i2)	6,7,8 (i5)	NA	11, 13, 14 (i5)	NA	NA	NA	4, 6, 13 (i5)	NA	NA	11	NA	3, 6 (i5)	* Same waste as tank waste
241-SY-5	Cleanout box	2 (i2)	6,7,8 (i5)	NA	11, 13, 14 (i5)	NA	NA	NA	4, 6, 13 (i5)	NA	NA	11	NA	3, 6 (i5)	* Same waste as tank waste
241-SY-6	Cleanout box	2 (i2)	6,7,8 (i5)	NA	11, 13, 14 (i5)	NA	NA	NA	4, 6, 13 (i5)	NA	NA	11	NA	3, 6 (i5)	* Same waste as tank waste
241-SY-02-E	Feed pump pit	2 (i2)	6,7,8 (i5)	NA	11, 13, 14 (i5)	NA	NA	NA	4, 6, 14 (i5)	2, 3 (i5)	NA	11	NA	3 (i5)	* Same waste as tank waste
241-SY-A	Flush pit	NA	NA	NA	NA	NA	NA	NA	4, 6, 11, 14 (i5)	NA	NA	11	NA	3 (i5)	NA
241-SY-B	Flush pit	NA	NA	NA	NA	NA	NA	NA	NA	NA	NA	11	NA	NA	NA
241-SY-02E	Flush pit	NA	NA	NA	NA	NA	NA	NA	NA	NA	NA	11	NA	NA	NA
241-SY-271	Instrument building	NA	NA	NA	6, (wd)	NA	NA	1, 2, 3, 5 (wd)	4, 10, 14 (wd)	3, 4 (wd)	NA	NA	6, (wd)	NA	Air compressor in instrument building
241-SY	Service pit	NA	NA	NA	NA	NA	NA	NA	4, 11, 14 (i5)	NA	NA	11	NA	3	NA
241-SY-A	Valve pit	2 (i2)	NA	NA	NA	NA	NA	NA	4, 13 (i5)	NA	NA	11	NA	NA	NA
241-SY-B	Valve pit	2 (i2)	NA	NA	NA	NA	NA	NA	4, 13 (i5)	NA	NA	11	NA	NA	NA

(i2) = Interview with Suzanne Lindberg
(i5) = Interview with Warren Brown, 5/9/96
(d1) = WHC-EP-0182, 1995, Waste Tank Summary Report for the Month Ending December 31, 1995, Rev 93, Westinghouse Hanford Company, Richland, Washington.
(d7) = OSD-T-151-00007, 1996, Operating Specifications for Double-Shell Tanks, Rev. H-17, Westinghouse Hanford Company, Richland, Washington.
(wd) = Facility walkdown 4/24/96, W. Brown, S. Gwin, D. Mendoza, R. Tucker

Table D3.1-4-T. TWRS Facility Hazard Identification. (4 sheets)

Facility	Type	A-Corrosive	B-Explosive/ Pyrophoric	C-Nuclear Criticality	D-Flammable Materials	E-Thermal Radiation	F-Chem. Rxtns.	G-Friction	H-Electrical	I-Kinetic-Rotation	J-Kinetic-Linear	K-Mass, Gravity, Height	L-Pressure-Volume	M-Thermal (except radiant)	Comments
Legend Boxes ->		Select applicable hazards from attached table and place corresponding hazard numbers in the boxes below.													Notes
T FARM		NA	NA	NA	3 *, 8 (wd)	NA	NA	NA	4, 5, 6, 9, 13, 14, 16 (wd)	NA	1 ** (wd)	2 *** (wd)	5 + (wd)	6 **** (wd)	* Gas powered generator parked on south side of farm. ** Portable lighting unit in farm and truck picking up saltwell lance. *** Stairs to change trailer. **** Electrical wiring in T-Farm. + Gas bottles associated with SHMS on tank T-110
241-T-101	SST	2 (i2)	6, 7, 8 (d7)	151 (d7)	11, 13, 14 (d7)	NA	NA	NA	4, 6, 14 ** (wd)	NA	NA	11 **** (wd)	NA	NA	** Temperature probes, liquid level devices, etc. **** Pits on tank, but none open.
241-T-102	SST	2 (i2)	6, 7, 8 (d7)	15 (d7)	11, 13, 14 (d7)	NA	NA	NA	4, 6, 14 ** (wd)	NA	NA	11 **** (wd)	NA	NA	** Temperature probes, liquid level devices, etc. **** Pits on tank, but none open.
241-T-103	SST	2 (i2)	6, 7, 8 (d7)	15 (d7)	11, 13, 14 (d7)	NA	NA	NA	4, 6, 14 ** (wd)	NA	NA	11 **** (wd)	NA	NA	** Temperature probes, liquid level devices, etc. **** Pits on tank, but none open.
241-T-104	SST	2 (i2)	6, 7, 8 (d7)	15 (d7)	11, 13, 14 (d7)	NA	NA	7 * (wd)	4, 6, 9, 10, 14 ** (wd)	NA	NA	11 **** (wd)	6 * (wd)	NA	* Saltwell pump skid, includes water and air tanks. ** Temperature probes, liquid level devices, etc. **** Pits on tank, but none open.

Table D3.1-4-T. TWRS Facility Hazard Identification. (4 sheets)

Facility	Type	A- Corrosive	B- Explosive/ Pyrophoric	C- Nuclear Criticality	D-Flammable Materials	E- Thermal Radiation	F- Chem. Rxtns.	G- Friction	H- Electrical	I- Kinetic- Rotation	J- Kinetic- Linear	K- Mass, Gravity, Height	L- Pressure- Volume	M- Thermal (except radiant)	Comments
Legend Boxes -->		Select applicable hazards from attached table and place corresponding hazard numbers in the boxes below.													Notes
241-T-105	SST	2 (i2)	6, 7, 8 (d7)	15 (d7)	11, 13, 14 (d7)	NA	NA	NA	4, 6, 14 ** (wd)	NA	NA	11 **** (wd)	NA	NA	** Temperature probes, liquid level devices, etc. **** Pits on tank, but none open.
241-T-106	SST	2 (i2)	6, 7, 8 (d7)	15 (d7)	11, 13, 14 (d7)	NA	NA	NA	4, 6, 14 ** (wd)	NA	NA	11 **** (wd)	NA	NA	** Temperature probes, liquid level devices, etc. **** Pits on tank, but none open.
241-T-107	SST	2 (i2)	6, 7, 8 (d7)	15 (d7)	11, 13, 14 + + (d7)	NA	NA	7 * (wd)	4, 6, 9, 10, 14 ** (wd)	NA	NA	11 **** (wd)	6 * (wd)	NA	* Saltwell pump skid, includes water and air tanks. ** Temperature probes, liquid level devices, etc. **** Pits on tank, but none open. + + Ferrocyanide watch list tank.
241-T-108	SST	2 (i2)	6, 7, 8 (d7)	15 (d7)	11, 13, 14 (d7)	NA	NA	NA	4, 6, 14 ** (wd)	NA	NA	11 **** (wd)	NA	NA	** Temperature probes, liquid level devices, etc. **** Pits on tank, but none open.
241-T-109	SST	2 (i2)	6, 7, 8 (d7)	15 (d7)	11, 13, 14 (d7)	NA	NA	NA	4, 6, 14 ** (wd)	NA	NA	11 **** (wd)	NA	NA	** Temperature probes, liquid level devices, etc. **** Pits on tank, but none open.
241-T-110	SST	2 (i2)	6, + + 7, 8 (d7)	15 (d7)	11 + + 13, 14 (d7)	NA	NA	5 * (wd)	4, 6, 14 ** (wd)	2 * (wd)	NA	11 **** (wd)	5 * (wd)	NA	* SHMS ** Temperature probes, liquid level devices, etc. **** Pits on tank, but none open. + + Hydrogen watch list tank.

Table D3.1-4-T. TWRS Facility Hazard Identification. (4 sheets)

Facility	Type	A- Corrosive	B- Explosive/ Pyrophoric	C- Nuclear Criticality	D-Flammable Materials	E- Thermal Radiation	F- Chem. Rxtns.	G- Friction	H- Electrical	I- Kinetic- Rotation	J- Kinetic- Linear	K- Mass, Gravity, Height	L- Pressure- Volume	M- Thermal (except radiant)	Comments
Legend Boxes -->		Select applicable hazards from attached table and place corresponding hazard numbers in the boxes below.													Notes
241-T-111	SST	2 (i2)	6, 7, 8 (d7)	15 (d7)	11, 13 ++ 14 (d7)	NA	NA	NA	4, 6, 14 ** (wd)	NA	NA	11 **** (wd)	NA	NA	** Temperature probes, liquid level devices, etc. **** Pits on tank, but none open. ++ Organics watch list tank.
241-T-112	SST	2 (i2)	6, 7, 8 (d7)	15 (d7)	11, 13, 14 (d7)	NA	NA	NA	4, 6, 14 ** (wd)	NA	NA	11 **** (wd)	NA	NA	** Temperature probes, liquid level devices, etc. **** Pits on tank, but none open.
241-T-201	SST	2 (i2)	6, 7, 8 (d7)	15 (d7)	11, 13, 14 (d7)	NA	NA	NA	4, 6, 14 ** (wd)	NA	NA	11 **** (wd)	NA	NA	** Temperature probes, liquid level devices, etc. **** Pits on tank, but none open.
241-T-202	SST	2 (i2)	6, 7, 8 (d7)	15 (d7)	11, 13, 14 (d7)	NA	NA	NA	4, 6, 14 ** (wd)	NA	NA	11 **** (wd)	NA	NA	** Temperature probes, liquid level devices, etc. **** Pits on tank, but none open.
241-T-203	SST	2 (i2)	6, 7, 8 (d7)	15 (d7)	11, 13, 14 (d7)	NA	NA	NA	4, 6, 14 ** (wd)	NA	NA	11 **** (wd)	NA	NA	** Temperature probes, liquid level devices, etc. **** Pits on tank, but none open.
241-T-204	SST	2 (i2)	6, 7, 8 (d7)	15 (d7)	11, 13, 14 (d7)	NA	NA	NA	4, 6, 14 ** (wd)	NA	NA	11 **** (wd)	NA	NA	** Temperature probes, liquid level devices, etc. **** Pits on tank, but none open.
241-T-701	Compressor building	NA	NA	NA	NA	NA	NA	NA	NA	NA	NA	NA	NA	NA	Air compressor out of service
216-T-1	Ditch	NA	NA	NA	NA	NA	NA	NA	NA	NA	NA	NA	NA	NA	NA
216-T-4-2	Ditch	NA	NA	NA	NA	NA	NA	NA	NA	NA	NA	NA	NA	NA	NA
216-T-7	Crib	NA	NA	NA	NA	NA	NA	NA	NA	NA	NA	NA	NA	NA	Potential for Cave-In (d12)

Table D3.1-4-T. TWRS Facility Hazard Identification. (4 sheets)

Facility	Type	A- Corrosive	B- Explosive/ Pyrophoric	C- Nuclear Criticality	D-Flammable Materials	E- Thermal Radiation	F- Chem. Rxtns.	G- Friction	H- Electrical	I- Kinetic- Rotation	J- Kinetic- Linear	K- Mass, Gravity, Height	L- Pressure- Volume	M- Thermal (except radiant)	Comments
Legend Boxes -->		Select applicable hazards from attached table and place corresponding hazard numbers in the boxes below.													Notes
216-T-32	Crib	NA	NA	NA	NA	NA	NA	NA	NA	NA	NA	NA	NA	NA	Potential for Cave-In (d12)
241-T-151	Diversion box	NA	NA	NA	NA	NA	NA	NA	NA	NA	NA	NA	NA	NA	Weather covered
241-T-152	Diversion box	NA	NA	NA	NA	NA	NA	NA	NA	NA	NA	NA	NA	NA	Weather covered
241-T-153	Diversion box	NA	NA	NA	NA	NA	NA	NA	NA	NA	NA	NA	NA	NA	Weather covered
241-T-252	Diversion box	NA	NA	NA	NA	NA	NA	NA	NA	NA	NA	NA	NA	NA	Weather covered
241-TR-152	Diversion box	NA	NA	NA	NA	NA	NA	NA	NA	NA	NA	NA	NA	NA	Weather covered
241-TR-153	Diversion box	NA	NA	NA	NA	NA	NA	NA	NA	NA	NA	NA	NA	NA	Weather covered
241-T-301	IMUST rad contaminated	2 (d6)	6, 7, 8 (d6)	NA	11, 12, 13, 14 (d6)	NA	NA	NA	NA	NA	NA	NA	NA	NA	NA
12 inch	Vertical storage units (6)	NA	NA	NA	NA	NA	NA	NA	NA	NA	NA	NA	NA	NA	NA
T-Farm	Satellite Accumulation Area	6 * (wd)	NA	NA	1, 2, 9, 13 * (wd)	NA	NA	NA	NA	NA	NA	NA	NA	NA	* Mixed waste storage could contain different constituents.

(d6) = WHC-EP-0861, 1995, Status Report for Inactive Miscellaneous Underground Storage Tanks at Hanford Site 200 Areas, Rev. 0, Westinghouse Hanford Company, Richland, Washington.
(d7) = OSD-T-151-00013, 1996, Operating Specifications for Single-Shell Waste Storage Tanks, Rev. D-10, Westinghouse Hanford Company, Richland, Washington.
(d12) = Environmental Sites Database (WIDS).
(wd) = Facility walkdown 4/3/96, L. Boyd, S. Gwin, K. Hull, D. Mendoza, C. Saget.

Table D3.1-4-TX. TWRS Facility Hazard Identification. (6 sheets)

Facility	Type	A- Corrosive	B- Explosive/ Pyrophoric	C- Nuclear Criticality	D- Flammable Materials	E- Thermal Radiation	F- Chem. Rxtns.	G- Friction	H- Electrical	I- Kinetic- Rotation	J- Kinetic- Linear	K- Mass, Gravity, Height	L- Pressure- Volume	M- Thermal (except radiant)	Comments
Legend Boxes ->		Select applicable hazards from attached table and place corresponding hazard numbers in the boxes below.													Notes
TX FARM		NA	NA	NA	NA	NA	NA	NA	3, 4, 5, 6, 16, 18 (wd)	2 (wd)	1 * (wd)	2+, 7 (wd)	5 ** (wd)	6+ + (wd)	* Sampling truck in farm. A-Frame type hoist southwest corner of farm. A plastic wrapped pallet of herbicides ~25 bags found inside farm ** Gas bottles outside change trailer for PCM1B + Stairs on change trailer. + + Wiring within farm.
241-TX-101	SST	2 (i4)	6, 7, 8 (d6)	15 (d6)	11, 13, 14 (d6)	NA	NA	NA	6, 14 * (wd)	NA	NA	11 ** (wd)	NA	NA	* Temperature probes, liquid level devices, etc. ** Pits on tank, but none open.
241-TX-102	SST	2 (i4)	6, 7, 8 (d6)	15 (d6)	11, 13, 14 (d6)	NA	NA	NA	6, 14 * (wd)	NA	NA	11 ** (wd)	NA	NA	* Temperature probes, liquid level devices, etc. ** Pits on tank, but none open.
241-TX-103	SST	2 (i4)	6, 7, 8 (d6)	15 (d6)	11, 13, 14 (d6)	NA	NA	NA	6, 14 * (wd)	NA	NA	11 ** (wd)	NA	NA	* Temperature probes, liquid level devices, etc. ** Pits on tank, but none open.
241-TX-104	SST	2 (i4)	6, 7, 8 (d6)	15 (d6)	11, 13, 14 (d6)	NA	NA	NA	6, 14 * (wd)	NA	NA	11 ** (wd)	NA	NA	* Temperature probes, liquid level devices, etc. ** Pits on tank, but none open.

Table D3.1-4-TX. TWRS Facility Hazard Identification. (6 sheets)

Facility	Type	A- Corrosive	B- Explosive/ Pyrophoric	C- Nuclear Criticality	D- Flammable Materials	E- Thermal Radiation	F- Chem. Rxtns.	G- Friction	H- Electrical	I- Kinetic- Rotation	J- Kinetic- Linear	K- Mass, Gravity, Height	L- Pressure- Volume	M- Thermal (except radiant)	Comments
Legend Boxes -->		Select applicable hazards from attached table and place corresponding hazard numbers in the boxes below.													Notes
241-TX-105	SST	2 (i4)	6, 7, 8 (d6)	15 (d6)	11, 13+ +, 14 (d1, d6)	NA	NA	NA	6, 14 * (wd)	NA	NA	11 ** (wd)	NA	NA	* Temperature probes, liquid level devices, etc. ** Pits on tank, but none open. + + Organic watch list tank.
241-TX-106	SST	2 (i4)	6, 7, 8 (d6)	15 (d6)	11, 13, 14, 17 *** (d6, wd)	NA	NA	NA	6, 14 * (wd)	NA	NA	11 ** (wd)	NA	NA	* Temperature probes, liquid level devices, etc. ** Pits on tank, but none open. *** 2 wood covers or walkways, 4' X 20', purpose could not be identified
241-TX-107	SST	2 (i4)	6, 7, 8 (d6)	15 (d6)	11, 13, 14 *** (d6)	NA	NA	NA	6, 14 * (wd)	NA	NA	11 ** (wd)	NA	NA	* Temperature probes, liquid level devices, etc. ** Pits on tank, but none open.
241-TX-108	SST	2 (i4)	6, 7, 8 (d6)	15 (d6)	11, 13, 14 *** (d6)	NA	NA	NA	6, 14 * (wd)	NA	NA	11 ** (wd)	NA	NA	* Temperature probes, liquid level devices, etc. ** Pits on tank, but none open. *** Must have ammonia monitor or supplied air
241-TX-109	SST	2 (i4)	6, 7, 8 (d6)	15 (d6)	11, 13, 14 *** (d6)	NA	NA	NA	6, 14 * (wd)	NA	NA	11 ** (wd)	NA	NA	* Temperature probes, liquid level devices, etc. ** Pits on tank, but none open. *** Must have ammonia monitor or supplied air

Table D3.1-4-TX. TWRS Facility Hazard Identification. (6 sheets)

Facility	Type	A- Corrosive	B- Explosive/ Pyrophoric	C- Nuclear Criticality	D- Flammable Materials	E- Thermal Radiation	F- Chem. Rxtns.	G- Friction	H- Electrical	I- Kinetic- Rotation	J- Kinetic- Linear	K- Mass, Gravity, Height	L- Pressure- Volume	M- Thermal (except radiant)	Comments
Legend Boxes ->		Select applicable hazards from attached table and place corresponding hazard numbers in the boxes below.													Notes
241-TX-110	SST	2 (i4)	6, 7, 8 (d6)	15 (d6)	11, 13, 14 *** (d6)	NA	NA	NA	6, 14 * (wd)	NA	NA	11 ** (wd)	NA	NA	* Temperature probes, liquid level devices, etc. ** Pits on tank, but none open. *** Must have ammonia monitor or supplied air
241-TX-111	SST	2 (i4)	6, 7, 8 (d6)	15 (d6)	11, 13, 14 *** (d6)	NA	NA	NA	6, 14 * (wd)	NA	NA	11 ** (wd)	NA	NA	* Temperature probes, liquid level devices, etc. ** Pits on tank, but none open. *** Must have ammonia monitor or supplied air
241-TX-112	SST	2 (i4)	6, 7, 8 (d6)	15 (d6)	11, 13, 14 (d6)	NA	NA	NA	6, 14 * (wd)	NA	NA	11 ** (wd)	NA	NA	* Temperature probes, liquid level devices, etc. ** Pits on tank, but none open.
241-TX-113	SST	2 (i4)	6, 7, 8 (d6)	15 (d6)	11, 13, 14 (d6)	NA	NA	NA	6, 14 * (wd)	NA	NA	11 ** (wd)	NA	NA	* Temperature probes, liquid level devices, etc. ** Pits on tank, but none open.
241-TX-114	SST	2 (i4)	6, 7, 8 (d6)	15 (d6)	11, 13, 14 (d6)	NA	NA	NA	6, 14 * (wd)	NA	NA	11 ** (wd)	NA	NA	* Temperature probes, liquid level devices, etc. ** Pits on tank, but none open.
241-TX-115	SST	2 (i4)	6, 7, 8 (d6)	15 (d6)	11, 13, 14 (d6)	NA	NA	NA	6, 14 * (wd)	NA	NA	11 ** (wd)	NA	NA	* Temperature probes, liquid level devices, etc. ** Pits on tank, but none open.

Table D3.1-4-TX. TWRS Facility Hazard Identification. (6 sheets)

Facility	Type	A- Corrosive	B- Explosive/ Pyrophoric	C- Nuclear Criticality	D- Flammable Materials	E- Thermal Radiation	F- Chem. Rxtns.	G- Friction	H- Electrical	I- Kinetic- Rotation	J- Kinetic- Linear	K- Mass, Gravity, Height	L- Pressure- Volume	M- Thermal (except radiant)	Comments
Legend Boxes -->		Select applicable hazards from attached table and place corresponding hazard numbers in the boxes below.													Notes
241-TX-116	SST	2 (i4)	6, 7, 8 (d6)	15 (d6)	11, 13, 14 (d6)	NA	NA	NA	6, 14 * (wd)	NA	NA	11 ** (wd)	NA	NA	* Temperature probes, liquid level devices, etc. ** Pits on tank, but none open.
241-TX-117	SST	2 (i4)	6, 7, 8 (d6)	15 (d6)	11, 13, 14 (d6)	NA	NA	NA	6, 14 * (wd)	NA	NA	11 ** (wd)	NA	NA	* Temperature probes, liquid level devices, etc. ** Pits on tank, but none open.
241-TX-118	SST	2 (i4)	6, 7, 8 (d6)	15 (d6)	11, 13, 14 + + (d1, d6)	NA	NA	NA	6, 14 * (wd)	NA	NA	11 ** (wd)	NA	NA	* Temperature probes, liquid level devices, etc. ** Pits on tank, but none open. + + Ferrocya-nide and organic watch list tank.
241-TX-302C	Catch tank	2 * (i4)	6, 7, 8 *	15 *	11, 13, 14 *	NA	NA	NA	NA	NA	NA	NA	NA	NA	* Waste composition unknown
241-T-601	Compressor building	NA	NA	NA	NA	NA	NA	NA	NA	NA	NA	NA	NA	NA	NA
244-TX	DCRT catch station	2 (i4) Same as tank waste	6, 7, 8, Same as tank waste, 10 ***	15 (d6)	11, 13, 14 (d6)	NA	NA	3, 5 (wd, d3)	4, 6, 9, 11 (wd)	2, 3, 4, (wd)	NA	11 * (wd)	NA	3, 6	* Pits are covered. *** Pu from PFP.
241-TXR-151	Diversion box	NA	NA	NA	NA	NA	NA	NA	NA	NA	NA	NA	NA	NA	Weather covered
241-TXR-152	Diversion box	NA	NA	NA	NA	NA	NA	NA	NA	NA	NA	NA	NA	NA	Weather covered
241-TXR-153	Diversion box	NA	NA	NA	NA	NA	NA	NA	NA	NA	NA	NA	NA	NA	Weather covered
241-TX-152	Diversion box	2 (i4) Same as tank waste	6, 7, 8 Same as tank waste 10 ***	NA	11, 13, 14 (d6)	NA	NA	NA	4	NA	NA	11 (wd)	NA	NA	*** Pu from PFP
241-TX-153	Diversion box	NA	NA	NA	NA	NA	NA	NA	NA	NA	NA	NA	NA	NA	Weather covered

Table D3.1-4-TX. TWRS Facility Hazard Identification. (6 sheets)

Facility	Type	A- Corrosive	B- Explosive/ Pyrophoric	C- Nuclear Criticality	D- Flammable Materials	E- Thermal Radiation	F- Chem. Rxtns.	G- Friction	H- Electrical	I- Kinetic- Rotation	J- Kinetic- Linear	K- Mass, Gravity, Height	L- Pressure- Volume	M- Thermal (except radiant)	Comments
Legend Boxes -->		Select applicable hazards from attached table and place corresponding hazard numbers in the boxes below.													Notes
241-TX-154	Diversion box	2 (l4) Same as tank waste	6, 7, 8 Same as tank waste 10 ***	NA	11, 13, 14 (d6)	NA	NA	NA	4	NA	NA	11 (wd)	NA	NA	MA
241-TX-155	Diversion box	NA	NA	NA	NA	NA	NA	NA	NA	NA	NA	NA	NA	NA	Weather covered
242-T-151	Diversion box	NA	NA	NA	NA	NA	NA	NA	NA	NA	NA	NA	NA	NA	Weather covered
241-TX-302A	IMUST rad contaminated	Unknown	6 (d5) *	No data	11	NA	NA	NA	NA	NA	NA	NA	NA	NA	* Waste composition unknown
241-TX-302B(R)	IMUST rad contaminated	Unknown	6 (d8)	NA (d8)	11	NA	NA	NA	NA	NA	NA	NA	NA	NA	NA
241-TX-302B	IMUST rad contaminated	Unknown	6 (d8)	15 (d8)	11	NA	NA	NA	NA	NA	NA	NA	NA	NA	NA
241-TX-302X	IMUST rad contaminated	Unknown	6 (d8)	15 (d8)	11	NA	NA	NA	NA	NA	NA	NA	NA	NA	NA
244-TXR-001	IMUST rad contaminated	Unknown	6 (d8)	NA (d8)	11	NA	NA	NA	NA	NA	NA	NA	NA	NA	NA
244-TXR-002	IMUST rad contaminated	Unknown	6 (d8)	NA (d8)	11	NA	NA	NA	NA	NA	NA	NA	NA	NA	NA
244-TXR-003	IMUST rad contaminated	Unknown	6 (d8)	NA (d8)	11	NA	NA	NA	NA	NA	NA	NA	NA	NA	NA
242-T-135	IMUST rad contaminated	NA	NA	NA	NA	NA	NA	NA	NA	NA	NA	NA	NA	NA	No data (d6)
242-TA-R1	IMUST rad contaminated	Unknown	6 (d5)	No data	11	NA	NA	NA	NA	NA	NA	NA	NA	NA	NA
12 inch	Vertical storage units (6)	NA	NA	NA	NA	NA	NA	NA	NA	NA	NA	17 * (wd)	NA	NA	* 12" pipes used for riser plug storage, may have abandoned tools inside.
	Satellite Accumulation Area	6 * (wd)	NA	NA	1, 2, 9, 13, * (wd)	NA	NA	NA	NA	NA	NA	NA	NA	NA	* Mixed waste storage, could have many different constituents.

Table D3.1-4-TX. TWRS Facility Hazard Identification. (6 sheets)

Facility	Type	A- Corrosive	B- Explosive/ Pyrophoric	C- Nuclear Criticality	D- Flammable Materials	E- Thermal Radiation	F- Chem. Rxtns.	G- Friction	H- Electrical	I- Kinetic- Rotation	J- Kinetic- Linear	K- Mass, Gravity, Height	L- Pressure- Volume	M- Thermal (except radiant)	Comments
Legend Boxes -->		Select applicable hazards from attached table and place corresponding hazard numbers in the boxes below.													Notes

(d3) = WHC-SD-WM-ISB-001, 1993, Hanford Site Tank Farm Facilities Interim Safety Basis, Rev. 0, Westinghouse Hanford Company, Richland, Washington.

(d6) = OSD-T-151-00013, 1996, Operating Specifications for Single-Shell Waste Storage Tanks, Rev. D-10, Westinghouse Hanford Company, Richland, Washington.

(d8) = WHC-SD-EN-ES-040, 1994, Engineering Study of 50 Miscellaneous Inactive Underground Radioactive Waste Tanks Located at the Hanford Site, Washington, Rev. 0, Westinghouse Hanford Company, Richland, Washington.

(i4) = Interview with Suzanne Lindberg, 5/16/96

(wd) = Facility walkdown 4/5/96, L. Boyd, S. Gwin, D. Mendoza, C. Saget, R. Tucker

Table D3.1-4-TY. TWRS Facility Hazard Identification. (2 sheets)

Facility	Type	A- Corrosive	B- Explosive/ Pyrophoric	C- Nuclear Criticality	D-Flammable Materials	E- Thermal Radiation	F- Chem. Rxtns.	G- Friction	H- Electrical	I- Kinetic- Rotation	J- Kinetic- Linear	K- Mass, Gravity, Height	L- Pressure- Volume	M- Thermal (except radiant)	Comments
Legend Boxes -->		Select applicable hazards from attached table and place corresponding hazard numbers in the boxes below.													Notes
TY FARM		NA	NA	NA	NA	NA	NA	NA	18 * (b)	NA	NA	NA	NA	NA	TY-Farm is clean closed and stabilized. * Pole mounted transformer (b)
241-TY-101	SST	2 (a)	6,7,8 (a)	15 (a)	14 + (d)	5 * (a)	NA	NA	3 **, 4, 16, (b)	NA	NA	NA	NA	NA	* Tank waste + Ferrocyanide watch list tank.
241-TY-102	SST	2 (a)	6,7,8 (a)	15 (a)	NA (a)	5 * (a)	NA	NA	3 **, 4, 16 , (b)	NA	NA	NA	NA	NA	* Tank waste
241-TY-103	SST	2 (a)	6,7,8 (a)	15 (a)	14 + (d)	5 * (a)	NA	NA	3 **, 4, 16, (b)	NA	NA	NA	NA	NA	* Tank waste + Ferrocyanide watch list tank.
241-TY-104	SST	2 (a)	6,7,8 (a)	15 (a)	13, 14 + (d)	5 * (a)	NA	NA	3 **, 4, 16, (b)	NA	NA	NA	NA	NA	* Tank waste + Ferrocyanide and organic watch list tank.
241-TY-105	SST	2 (a)	6,7,8 (a)	15 (a)	NA (a)	5 * (a)	NA	NA	3 **, 4, 16, (b)	NA	NA	NA	NA	NA	* Tank waste
241-TY-106	SST	2 (a)	6,7,8 (a)	15 (a)	NA (a)	5 * (a)	NA	NA	3 **, 4, 16, (b)	NA	NA	NA	NA	NA	* Tank waste
241-TY-A	Valve box	NA	NA	NA	NA	NA	NA	NA	NA	NA	NA	NA	NA	NA	Valve box located between TY-105/106.
241-TY-153	Diversion box	NA	NA	NA	NA	NA	NA	NA	NA	NA	NA	NA	NA	NA	NA
216-TY-201	IMUST rad contaminated	No data	NA	NA	NA	NA	NA	NA	NA	NA	NA	NA	NA	NA	No data
241-TY-302A	IMUST rad contaminated	NA	NA	NA	NA	NA	NA	NA	NA	NA	NA	NA	NA	NA	TY farm IMUSTS stabilized, no pumpable liquids, verification via CCTV (c)

Table D3.1-4-TY. TWRS Facility Hazard Identification. (2 sheets)

Facility	Type	A- Corrosive	B- Explosive/ Pyrophoric	C- Nuclear Criticality	D-Flammable Materials	E- Thermal Radiation	F- Chem. Rxtns.	G- Friction	H- Electrical	I- Kinetic- Rotation	J- Kinetic- Linear	K- Mass, Gravity, Height	L- Pressure- Volume	M- Thermal (except radiant)	Comments
Legend Boxes -->		Select applicable hazards from attached table and place corresponding hazard numbers in the boxes below.													Notes
241-TY-302B	IMUST rad contaminated	NA	NA	NA	NA	NA	NA	NA	NA	NA	NA	NA	NA	NA	TY farm IMUSTS stabilized, no pumpable liquids, verification via CCTV (c)

(a) = OSD-T-151-00013, 1996, Operating Specifications for Single-Shell Waste Storage Tanks, Rev. D-10, Westinghouse Hanford Company, Richland, Washington.
(b) = Walkdown, 4/3/96, L. Boyd, P.K. Brockman, S. Gwin, K. Hull, D. Mendoza, C. Saget
(c) = Interview with Kevin Hull
(d) = WHC-EP-0182-93, 1995, Waste Tank Summary Report for the Month Ending December 31, 1995, Rev 93, Westinghouse Hanford Company, Richland, Washington.

Table D3.1-4-U. TWRS Facility Hazard Identification. (6 sheets)

Facility	Type	A- Corrosive	B- Explosive/ Pyrophoric	C- Nuclear Criticality	D-Flammable Materials	E- Thermal Radiation	F- Chem. Rxtns.	G- Friction	H- Electrical	I- Kinetic- Rotation	J- Kinetic- Linear	K- Mass, Gravity, Height	L- Pressure- Volume	M- Thermal (except radiant)	Comments
Legend Boxes -->		Select applicable hazards from attached table and place corresponding hazard numbers in the boxes below.													Notes
U FARM		NA	7 * (wd)	NA	8, 14 * (wd)	NA	NA	NA	3, 4, 5, 6, 7, 8, 16, 18 (wd)	NA	1, 5 ** (wd)	2, 3, 5 (wd) ***	5 **** (wd)	6+ (wd)	* Large liquid nitrogen and 2 propane tanks outside fence on south side. ** sampling truck and crane. *** Change trailer **** SHMS, gas bottles on tanks 103, 105, 107, 108, 109. + Wiring in farm
241-U-101	SST	2 (i5)	6, 7, 8 (d6)	15 (d6)	11, 13, 14, (d6)	NA	NA	NA	6, 14 ** (wd)	NA	NA	11 **** (wd)	NA	NA	** Temperature probes, liquid level devices, etc. **** Pits on tank, but none open.
241-U-102	SST	2 (i5)	6, 7, 8 (d6)	15 (d6)	11, 13, 14, (d6)	NA	NA	NA	6, 14 ** (wd)	NA	NA	11 **** (wd)	NA	NA	** Temperature probes, liquid level devices, etc. *** Sampling truck **** Pits on tank, but none open.
241-U-103	SST	2 (i5)	6, 7, 8 (d6)	15 (d6)	11, 13+ + 14, ***** (d1, d6)	NA	NA	5 * (wd)	4, 6, 10, 14 ** (wd)	2 * (wd)	NA	11 **** (wd)	NA	NA	* SHMS, hydrogen watch list tank. ** Temperature probes, liquid level devices, etc. **** Pits on tank, but none open. ***** Must have ammonia monitor or supplied air. + + Organic watch list tank.
241-U-104	SST	2 (i5)	6, 7, 8 (d6)	15 (d6)	11, 13, 14, (d6)	NA	NA	NA	6, 14 ** (wd)	NA	NA	11 **** (wd)	NA	NA	** Temperature probes, liquid level devices, etc. **** Pits on tank, but none open.

Table D3.1-4-U. TWRS Facility Hazard Identification. (6 sheets)

Facility	Type	A- Corrosive	B- Explosive/ Pyrophoric	C- Nuclear Criticality	D-Flammable Materials	E- Thermal Radiation	F- Chem. Rxtns.	G- Friction	H- Electrical	I- Kinetic- Rotation	J- Kinetic- Linear	K- Mass, Gravity, Height	L- Pressure- Volume	M- Thermal (except radiant)	Comments
Legend Boxes -->	Select applicable hazards from attached table and place corresponding hazard numbers in the boxes below.														Notes
241-U-105	SST	2 (i5)	6, 7, 8 (d6)	15 (d6)	11, 13+ + 14, ***** (d1, d6)	NA	NA	5 * (wd)	4, 6, 10, 14 ** (wd)	2 * (wd)	NA	11 **** (wd)	NA	NA	* SHMS, hydrogen watch list tank. ** Temperature probes, liquid level devices, etc. **** Pits on tank, but none open. ***** Must have ammonia monitor or supplied air. + + Organic watch list tank.
241-U-106	SST	2 (i5)	6, 7, 8 (d6)	15 (d6)	11, 13+ + 14, ***** (d1, d6)	NA	NA	NA	6, 14 ** (wd)	NA	NA	11 **** (wd)	NA	NA	** Temperature probes, liquid level devices, etc. ****Pits on tank, but none open. ***** Must have ammonia monitor or supplied air, also has HCN monitoring area. + + Organic watch list tank.
241-U-107	SST	2 (i5)	6, 7, 8 (d6)	15 (d6)	11, 13+ + 14 (d1, d6)	NA	NA	5 * (wd)	4, 6, 10, 14 ** (wd)	2 * (wd)	NA	11 **** (wd)	NA	NA	* SHMS, hydrogen watch list tank. ** Temperature probes, liquid level devices, etc. **** Pits on tank, but nonepen. + + Organic watch list tank.
241-U-108	SST	2 (i5)	6, 7, 8 (d6)	15 (d6)	11, 13, 14, (d6)	NA	NA	5 * (wd)	4, 6, 10, 14 ** (wd)	2 * (wd)	NA	11 **** (wd)	NA	NA	* SHMS, hydrogen watch list tank. ** Temperature probes, liquid level devices, etc. **** Pits on tank, but none open.

Table D3.1-4-U. TWRS Facility Hazard Identification. (6 sheets)

Facility	Type	A- Corrosive	B- Explosive/ Pyrophoric	C- Nuclear Criticality	D-Flammable Materials	E- Thermal Radiation	F- Chem. Rxtns.	G- Friction	H- Electrical	I- Kinetic- Rotation	J- Kinetic- Linear	K- Mass, Gravity, Height	L- Pressure- Volume	M- Thermal (except radiant)	Comments
Legend Boxes ->		Select applicable hazards from attached table and place corresponding hazard numbers in the boxes below.													Notes
241-U-109	SST	2 (i5)	6, 7, 8 (d6)	15 (d6)	11, 13, 14, (d6)	NA	NA	5 * (wd)	4, 6, 10, 14 ** (wd)	2 * (wd)	NA	11 **** (wd)	NA	NA	* SHMS, hydrogen watch list tank. ** Temperature probes, liquid level devices, etc. **** Pits on tank, but none open.
241-U-110	SST	2 (i5)	6, 7, 8 (d6)	15 (d6)	11, 13, 14, ***** (d6)	NA	NA	NA	6, 14 ** (wd)	NA	NA	11 **** (wd)	NA	NA	** Temperature probes, liquid level devices, etc. **** Pits on tank, but none open. ***** Must have ammonia monitor or supplied air.
241-U-111	SST	2 (i5)	6, 7, 8 (d6)	15 (d6)	11, 13++ 14 ***** (d1, d6)	NA	NA	NA	6, 14 ** (wd)	NA	NA	11 **** (wd)	NA	NA	** Temperature probes, liquid level devices, etc. **** Pits on tank, but none open. ***** Must have ammonia monitor or supplied air. ++ Organic watch list tank.
241-U-112	SST	2 (i5)	6, 7, 8 (d6)	15 (d6)	11, 13, 14, (d6)	NA	NA	NA	6, 14 ** (wd)	NA	NA	11 **** (wd) 17 ++ (wd)	NA	NA	** Temperature probes, liquid level devices, etc. **** Pits on tank, but none open. ++ Tank is roped off and has signs indicating "UNSTABLE GROUND"
241-U-201	SST	2 (i5)	6, 7, 8 (d6)	15 (d6)	11, 13, 14, (d6)	NA	NA	NA	6, 14 ** (wd)	NA	NA	11 **** (wd)	NA	NA	** Temperature probes, liquid level devices, etc. ****Pits on tank, but none open.

Table D3.1-4-U. TWRS Facility Hazard Identification. (6 sheets)

Facility	Type	A- Corrosive	B- Explosive/ Pyrophoric	C- Nuclear Criticality	D-Flammable Materials	E- Thermal Radiation	F- Chem. Rxtns.	G- Friction	H- Electrical	I- Kinetic- Rotation	J- Kinetic- Linear	K- Mass, Gravity, Height	L- Pressure- Volume	M- Thermal (except radiant)	Comments
Legend Boxes -->		Select applicable hazards from attached table and place corresponding hazard numbers in the boxes below.													Notes
241-U-202	SST	2 (i5)	6, 7, 8 (d6)	15 (d6)	11, 13, 14, (d6)	NA	NA	NA	6, 14 ** (wd)	NA	NA	11 **** (wd)	NA	NA	** Temperature probes, liquid level devices, etc. **** Pits on tank, but none open.
241-U-203	SST	2 (i5)	6, 7, 8 (d6)	15 (d6)	11, 13++ 14 (d1, d6)	NA	NA	NA	6, 14 ** (wd)	NA	NA	11 **** (wd)	NA	NA	** Temperature probes, liquid level devices, etc. **** Pits on tank, but none open. ++ Organic watch list tank
241-U-204	SST	2 (i5)	6, 7, 8 (d6)	15 (d6)	11, 13++ 14 (d1, d6)	NA	NA	NA	6, 14 ** (wd)	NA	NA	11 **** (wd)	NA	NA	** Temperature probes, liquid level devices, etc. **** Pits on tank, but none open. ++ Organic watch list tank.
241-U-301B	Catch tank	2 (i5)	6,7, 8 *	15 *	11, 13, 14	NA	NA	NA	4, 14 (wd)	NA	NA	NA	NA	NA	* Waste composition unknown ENRAF liquid level device
241-UX-302A	Catch Tank	2 (i5)	6,7, 8 *	15 *	11, 13, 14	NA	NA	NA	4, 14 (wd)	NA	NA	NA	NA	NA	* Waste composition unknown ENRAF liquid level device
241-U-701	Compressor building	NA	NA	NA	4, 10 (wd)	NA	NA	1, 2, 3, 5, (wd)	4, 8, 10 (wd)	2 (wd)	6 (wd)	NA	6 (wd)	NA	Air compressor
216-U-12	Crib	2 (d12)	NA (d12)	NA (d12)	NA (d12)	NA (d12)	NA (d12)	NA (d12)	NA (d12)	NA (d12)	NA (d12)	NA (d12)	NA (d12)	NA (d12)	NA (d12)
216-U-17	Crib	NA (d12)	NA (d12)	NA (d12)	NA (d12)	NA (d12)	NA (d12)	NA (d12)	NA (d12)	NA (d12)	NA (d12)	NA (d12)	NA (d12)	NA (d12)	NA (d12)
244-U	DCRT catch station	NA	NA	NA	NA	NA	NA	3, 5 (wd)	4, 6, 9, 11, 14, (wd)	2, 3., 4 (wd)	NA	11 (wd) **	NA	3, 6 (wd)	* 244-U has not received any waste. ** Pits are covered

Table D3.1-4-U. TWRS Facility Hazard Identification. (6 sheets)

Facility	Type	A- Corrosive	B- Explosive/ Pyrophoric	C- Nuclear Criticality	D-Flammable Materials	E- Thermal Radiation	F- Chem. Rxtns.	G- Friction	H- Electrical	I- Kinetic- Rotation	J- Kinetic- Linear	K- Mass, Gravity, Height	L- Pressure- Volume	M- Thermal (except radiant)	Comments
Legend Boxes -->		Select applicable hazards from attached table and place corresponding hazard numbers in the boxes below.													Notes
216-U-14	Ditch	1 (d12)	NA (d12)	NA (d12)	NA (d12)	NA (d12)	NA (d12)	NA (d12)	NA (d12)	NA (d12)	NA (d12)	NA (d12)	NA (d12)	NA (d12)	NA (d12)
241-U-151	Diversion box	2 (i5)	6,7,8 Same as tank waste	NA	11, 13, 14, (d6)	NA	NA	NA	4	NA	NA	11(wd)	NA	NA	NA
241-U-152	Diversion box	2 (i5)	6,7,8 Same as tank waste	NA	11, 13, 14, (d6)	NA	NA	NA	4	NA	NA	11 (wd)	NA	NA	NA
241-UX-154	Diversion box	2 (i5)	6,7,8 Same as tank waste	NA	11, 13, 14, (d6)	NA	NA	NA	4	NA	NA	11 (wd)	NA	NA	NA
241-U-153	Diversion box	NA	NA	NA	NA	NA	NA	NA	NA	NA	NA	NA	NA	NA	Weather covered
241-U-252	Diversion box	NA	NA	NA	NA	NA	NA	NA	NA	NA	NA	NA	NA	NA	Weather covered
241-UR-151	Diversion box	NA	NA	NA	NA	NA	NA	NA	NA	NA	NA	NA	NA	NA	Weather covered
241-UR-152	Diversion box	NA	NA	NA	NA	NA	NA	NA	NA	NA	NA	NA	NA	NA	Weather covered
241-UR-153	Diversion box	NA	NA	NA	NA	NA	NA	NA	NA	NA	NA	NA	NA	NA	Weather covered
241-UR-154	Diversion box	NA	NA	NA	NA	NA	NA	NA	NA	NA	NA	NA	NA	NA	Weather covered
241-U-A	Valve pit	Unknown	Unknown	NA	Unknown	NA	NA	NA	4, 14, (wd)	NA	NA	11 (wd)	NA	6 (wd)	NA
241-U-B	Valve pit	Unknown	Unknown	NA	Unknown	NA	NA	NA	4, 14, (wd)	NA	NA	11 (wd)	NA	6 (wd)	NA
241-U-C	Valve pit	Unknown	Unknown	NA	Unknown	NA	NA	NA	4, 14, (wd)	NA	NA	11 (wd)	NA	6 (wd)	NA
241-U-D	Valve pit	Unknown	Unknown	NA	Unknown	NA	NA	NA	4, 14, (wd)	NA	NA	11 (wd)	NA	6 (wd)	NA
COB U-25	Clean out box	2 * (i5)	6,7,8 (d6)	NA	11, 13, 14 * (d1)	NA	NA	NA	4, 6, 13 (wd)	NA	NA	11 (wd)	NA	3, 6 (wd)	* Same waste as tank waste
COB U-26	Clean out box	2 * (i5)	6,7,8 (d6)	NA	11, 13, 14 * (d1)	NA	NA	NA	4, 6, 13 (wd)	NA	NA	11 (wd)	NA	3, 6 (wd)	* Same waste as tank waste

Table D3.1-4-U. TWRS Facility Hazard Identification. (6 sheets)

Facility	Type	A- Corrosive	B- Explosive/ Pyrophoric	C- Nuclear Criticality	D-Flammable Materials	E- Thermal Radiation	F- Chem. Rxtns.	G- Friction	H- Electrical	I- Kinetic- Rotation	J- Kinetic- Linear	K- Mass, Gravity, Height	L- Pressure- Volume	M- Thermal (except radiant)	Comments
Legend Boxes -->		Select applicable hazards from attached table and place corresponding hazard numbers in the boxes below.													Notes
COB U-27	Clean out box	2 * (i5)	6,7,8 (d6)	NA	11, 13, 14 * (d1)	NA	NA	NA	4, 6, 13 (wd)	NA	NA	11 (wd)	NA	3, 6 (wd)	* Same waste as tank waste
COB U-28	Clean out box	2 * (i5)	6,7,8 (d6)	NA	11, 13, 14 * (d1)	NA	NA	NA	4, 6, 13 (wd)	NA	NA	11 (wd)	NA	3, 6 (wd)	* Same waste as tank waste
COB U-29	Clean out box	2 * (i5)	6,7,8 (d6)	NA	11, 13, 14 * (d1)	NA	NA	NA	4, 6, 13 (wd)	NA	NA	11 (wd)	NA	3, 6 (wd)	* Same waste as tank waste
COB U-30	Clean out box	2 * (i5)	6,7,8 (d6)	NA	11, 13, 14 * (d1)	NA	NA	NA	4, 6, 13 (wd)	NA	NA	11 (wd)	NA	3, 6 (wd)	* Same waste as tank waste
COB U-31	Clean out box	2 * (i5)	6,7,8 (d6)	NA	11, 13, 14 * (d1)	NA	NA	NA	4, 6, 13 (wd)	NA	NA	11 (wd)	NA	3, 6 (wd)	* Same waste as tank waste
COB U-32	Clean out box	2 * (i5)	6,7,8 (d6)	NA	11, 13, 14 * (d1)	NA	NA	NA	4, 6, 13 (wd)	NA	NA	11 (wd)	NA	3, 6 (wd)	* Same waste as tank waste
COB U-33	Clean out box	2 * (i5)	6,7,8 (d6)	NA	11, 13, 14 * (d1)	NA	NA	NA	4, 6, 13 (wd)	NA	NA	11 (wd)	NA	3, 6 (wd)	* Same waste as tank waste
COB U-34	Clean out box	2 * (i5)	6,7,8 (d6)	NA	11, 13, 14 * (d1)	NA	NA	NA	4, 6, 13 (wd)	NA	NA	11 (wd)	NA	3, 6 (wd)	* Same waste as tank waste
241-U-271	Instrument Building	NA	NA	NA	NA	NA	NA	NA	4, 5, 8, 11, 13 (wd)	NA	NA	NA	NA	6 (wd)	NA
	Change Trailer	NA	NA	NA	NA	NA	NA	NA	4, 11, 14 (wd)	NA	NA	2 (wd)	NA	6 (wd)	NA
12 inch	Vertical storage units (6)	NA	NA	NA	NA	NA	NA	NA	NA	NA	NA	NA	NA	NA	* 12 " pipes used for riser plug storage, may have abandoned tools inside.
	Satellite Accumulation Area	6 * (wd)	NA	NA	1, 2, 9, 13 * (wd)	NA	NA	NA	NA	NA	NA	NA	NA	NA	* Mixed waste storage, could have many different constituents.

(d6) = OSD-T-151-00013, 1996, Operating Specifications for Single-Shell Waste Storage Tanks, Rev. D-10, Westinghouse Hanford Company, Richland, Washington.
(d12) = Environmental Sites Database (WIDS)
(i5) = Interview with Suzanne Lindberg, 5/16/96
(wd) = Facility walkdown 4/11/96, T. Bowman, L. Boyd, S. Gwin, K. Hull, D. Mendoza

Table 3.1-4-MISC. Miscellaneous Facilities Hazards Identification.

Energy classification *	204-AR hazards		244-AR hazards		2727-W hazards		213-W hazards		209-E hazards		Cribs, ditches, and ponds hazards		Cleanout boxes hazards		Vertical storage vaults hazards	
	PF	PE	PF	PE	PF	PE	PF	PE	PF	PE	PF	PE	PF	PE	PF	PE
Corrosive	2	NA	2	NA	NA	2	NA	NA	1,2	NA	NA	NA	1,2,3,4, 5,6	NA	NA	NA
Explosive/pyrophoric	NA	NA	NA	NA	NA	11	NA	NA	6,7,11	NA	NA	NA	6,7,8	NA	NA	NA
Nuclear criticality	3,10,15	NA	1,15	NA	NA	NA	NA	NA	NA	NA	NA	NA	NA	NA	NA	NA
Flammable materials	3,7,8	NA	1,7,8	NA	16	8,14	2,6,8,13	NA	1,2,6,10, 11,13,14,15	NA	NA	3,7	11,13,14	3,7	NA	3,7
Thermal radiation	NA	NA	NA	NA	NA	NA	NA	NA	NA	NA	NA	NA	NA	NA	NA	NA
Chemical reactions	1	NA	1	NA	1	NA	NA	NA	1	NA	NA	NA	NA	NA	NA	NA
Friction	1,2,3,5	NA	1,3,5	NA	NA	NA	3,4,6	NA	5	NA	NA	NA	NA	NA	NA	NA
Electrical	2,3,4,7, 9,10,11,16	17	2,3,4,5,6,9,1 0,11,16	NA	4,14,1 9	NA	1,4,7,8, 11,12,13	NA	4,14	NA	NA	NA	4,14	NA	NA	NA
Kinetic-rotational	2,3,4	NA	2,3,4	NA	NA	NA	4	NA	2	NA	NA	NA	NA	NA	NA	NA
Kinetic-linear	1,3,4,5	1,3	5	1,4	NA	1	NA	NA	1,2,4	NA	NA	1,5	NA	1,4,5	NA	1,5
Mass, gravity, height	2,3,5,10, 11,13,16	NA	2,3,5,7, 10,11,16	NA	10,13	5	12,16	11	1,3,5	NA	NA	NA	1	3,5	NA	3,5
Pressure-volume	6,8	NA	6,8	NA	5	12	NA	NA	5	NA	NA	NA	NA	NA	NA	NA
Thermal (except radiant)	3,6	NA	3,6	NA	NA	NA	3,6	NA	NA	NA	NA	NA	NA	NA	NA	NA

Note: The hazards identification represents the hazards that could potentially cause an uncontrolled release of radioactive or hazardous materials only. Hazards only resulting in personnel injury are not included.

* See Table D2.1-2 for the specific energy classifications represented by the numeric designators.

NA = not applicable.
PE = potentially present elsewhere in/adjacent to facility.
PT = potentially present in tanks.

This page intentionally left blank.

Table D3.1-4-IMUST. Inactive Miscellaneous Underground Storage Tanks or Miscellaneous Inactive Storage Facilities Hazards Identification.

Energy classification *	Aboveground nonradioactive facility hazards		Aboveground radioactive facility hazards		Underground nonradioactive facility hazards		Underground radioactive facility hazards	
	PF	PE	PF	PE	PF	PE	PF	PE
Corrosive	2	NA	2	NA	2	NA	2	NA
Explosive/pyrophoric	6,7	NA	6,7	NA	6,7	NA	6,7	NA
Nuclear criticality	NA	NA	15	1	NA	NA	15	1
Flammable materials	11,13,14	3,7	11,13,14	3,7	11,13,14	3,7	11,13,14	3,7
Thermal radiation	NA	NA	NA	NA	NA	NA	NA	NA
Chemical reactions	1	NA	1	NA	1	NA	1	NA
Friction	NA	NA	NA	NA	NA	NA	NA	NA
Electrical	NA	NA	NA	NA	NA	NA	NA	NA
Kinetic-rotational	NA	NA	NA	NA	NA	NA	NA	NA
Kinetic-linear	NA	1,4,5	NA	1,4,5	NA	1,4,5	NA	1,4,5
Mass, gravity, height	NA	3,5,11,14	NA	3,5,11,14	NA	3,5,11,14	NA	3,5,11,14
Pressure-volume	7,9,11	NA	7,9,11	NA	7,9,11	NA	7,9,11	NA
Thermal (except radiant)	NA	NA	NA	NA	NA	NA	NA	NA

Note: The hazards identification represents the hazards that could potentially cause an uncontrolled release of radioactive or hazardous materials only. Hazards only resulting in personnel injury are not included.

* See Table D2.1-2 for the specific energy classifications represented by the numeric designators.

NA = not applicable.
PE = potentially present elsewhere in/adjacent to facility.
PT = potentially present in tanks.

This page intentionally left blank.

Table D3.2-1. Tank Farm Events, Off-Normal (ON) and Critiques. (11 sheets)

Date	Event #	Event Type	Event Description
1-8-86	86-01	ON	Diesel generator at 244-AR Vault failed, ran out of fuel
1-8-86	86-02	ON	Tank 101-AW pressurized after transfer, reason unknown
1-9-86	86-03	ON	Tank 101-AW slurry distributor plugged during transfer.
1-16-86	86-06	ON	Valve AX-B-15 leaked, allowing AY-102 to AW-102 transfer to enter AN-101.
1-23-86	86-07	ON	Failure to shutdown AY-102 annulus ventilation when required during transfer, @ minimum level.
2-2-86	86-10	ON	AY and AZ tanks pressurized due to primary and backup exhauster failure.
2-6-86	86-11	ON	204-AR 702 leak detector switch mislabeled, improperly bypassed. Transfer stopped due to bypass signal.
2-7-86	86-12	ON	Inst. technician proceeded with work w/o approval, caused exhauster to shutdown. 241-A control room.
2-11-86	86-13	ON	Primary exhauster shutdown, backup failed. Portable backup started, over-pressurized AY and AZ tanks.
3-28-86	86-14	ON	701-SX air compressor oil line ruptured, spraying oil causing smoke. Smoke detector tripped.
7-22-87	86-15	ON	152-AX catch tank level limit exceeded. Deentrainer flush valve left open.
2-25-86	86-16	ON	Primary exhauster shutdown, backup failed. Portable exhauster started, then backup started. 101-AZ tank pressurized.
2-25-86	86-17	ON	Primary exhauster shutdown, backup failed. Six AW tanks pressurized.
3-3-86	86-18	ON	SY-101 tank burp. Pressurized SY-101 & 103.
11-18-86	86-19	ON	241-AW annulus exhauster fan failed, loose blade caused hole in housing.
1-17-87	86-20	ON	Tank 106-AW pressurized during slurry transfer.
3-26-86	86-21	ON	Tank 105-AW pressurized during PUREX E-5 transfers. (4 times)
4-9-86	86-22	ON	Primary exhauster shutdown, backup failed. AY and AZ tanks pressurized.
4-8-86	86-24	ON	244-AR backup air compressor failed on loss of oil. Primary compressor had failed.
1-17-87	86-25	ON	241-AW primary & annulus exhauster failure. AW tanks pressurized.
1-21-87	86-27	ON	241-AW portable exhauster failed during primary exhauster maintenance. AW tanks pressurized.
6-30-86	86-29	ON	102-AW pressurized due to sump jet air DOV leak-through.
7-21-86	86-31	ON	Power shut off to 241-AN tank farm. Operations notified 30 days prior, but not at the time.
7-21-86	86-32	ON	271-AN air conditioner repair tripped building power off.
7-23-86	86-33	ON	241-AW portable exhauster fail, would not restart. AW tanks pressurized.
8-7-86	86-35	ON	Backup exhauster failed to start on test. AZ tanks pressurized.
1-17-87	86-36	ON	102-AW tank pressurized during transfer, pressure instruments valved out.
9-17-86	86-38	ON	241-AW Raw water service pit strainer leaked 850 gallons due to improper size of hold down lid.
10-3-86	86-41	ON	AY & AZ farm steam diverter valve stuck during test, flow to 216-A-08 crib.
10-7-86	86-45	ON	AN farm air compressor failed causing loss of air to farm instruments.
11-7-86	86-49	ON	AZ farm airlift circulators shutdown too long. (out for test)
12-1-86	86-52	ON	Tank 101-AZ below minimum level requirement.
1-17-87	86-53	ON	Raw water filter drain left open, filled seal loop, allowed pressurization of AY tanks.

Table D3.2-1. Tank Farm Events, Off-Normal (ON) and Critiques. (11 sheets)

Date	Event #	Event Type	Event Description
11-29-86	86-54	ON	Electrical outage at 200-East farm, AN, AP, and AW tanks pressure alarms activated.
12-1-86	86-55	ON	Power supply tripped to AP farm, tripped vent systems. Tanks pressurized.
12-1-86	86-56	ON	I-129 emissions from AW exhauster exceeding yearly guidelines.
12-9-86	86-58	ON	216-Z-20 crib level at 36", exceeding vapor barrier @ 30". Insufficient infiltration rate.
7-3-87	WHC-C-87-008	Critique	Four personnel had irritated nose and throats due to breathing in 241-C farm.
8-25-87	WHC-C-87-057-TF-03	Critique	Failure to take vacuum readings in SX farm. No vacuum gauge to read.
1-14-88	WHC-C-88-035-TF01	Critique	Water in crib 216-U-17 riser before crib startup.
2-1-88	WHC-C-88-048-TF-02	Critique	Elevated Ruthenium-106 effluent from 241-AP farm exhaust.
5-21-88	WHC-C-88-105-TF-05	Critique	Contamination spread from 241-S farm while washing sludge to pit drain.
7-14-88	WHC-C-88-118-TF-06	Critique	Liquid observation well failure, resulting contamination spread.
8-2-88	WHC-C-88-128-TF-07	Critique	241-SY exhauster failure, tanks pressurized. Pressure alarms failed.
9-12-88	WHC-C-88-132-TF-08	Critique	Crib 216-S-26 not handling 222-S flows. Level rising.
9-19-88	WHC-C-88-161-TF-09	Critique	101-SY exceeded level increase criteria.
12-10-88	WHC-C-88-185-TF-10	Critique	Misrouted condensate from A-417 to 101-AZ tank, instead of 102-AY receiver tank.
3-22-89	WHC-C-89-54-TF-02	Critique	Weight factor and radiation levels exceed criteria in 101-AX leak detection pit.
4-30-89	WHC-C-89-55-TF-03	Critique	Weight factor and radiation levels exceed criteria in 102-AZ leak detection pit.
9-28-89	WHC-C-89-106-TF-08	Critique	Employee felt ill after walking by AP farm. Assumed ammonia inhalation.
10-27-89	WHC-C-89-117-TF-09	Critique	241-AZ vent header found to contain cracks through the wall.
9-14-90	WHC-TANKFARM-1990-54	ON	1500 gallon leak through open raw water valve to 244-BX DCRT.
10-1-90	WHC-TANKFARM-1990-102	ON	241-AN annunciator panel power loss, loss of alarm capabilities for AN farm.
10-11-90	WHC-TANKFARM-1990-134	ON	Level decrease in tank C-103. Assumed evaporation.
10-19-90	WHC-TANKFARM-1990-162	ON	One acre of land along Powerhouse ditch found contaminated.
10-24-90	WHC-TANKFARM-1990-173	ON	101-SY vents through crust and level drops.
10-24-90	WHC-TANKFARM-1990-181	ON	Employee smoking, eating and drinking in radiation zone, 271-SY-241 instrument building.
11-04-90	WHC-TANKFARM-1990-205	ON	244-BX flush-pit valve leak adds 700 gallons to 244-BX DCRT.
11-11-90	WHC-TANKFARM-1990-219	ON	242-A Monitoring and Control System failed. No monitoring of some East Area alarms.
11-13-90	WHC-TANKFARM-1990-223	ON	Portable exhauster monitoring failure on tank C-106. Stack effluent not monitored.
12-4-90	WHC-TANKFARM-1990-291	ON	Liquid level increase in 241-BY-10. Assumed crystal growth.
12-10-90	WHC-TANKFARM-1990-315	ON	Radiation readings under tanks A-101, 102, & 105 not taken.
12-19-90	WHC-TANKFARM-1990-346	ON	AW farm backup exhaust fan failed to start as required. High pressure in tank farm.
12-20-90	WHC-TANKFARM-1990-352	ON	Frozen water pipe in 244-TX instrument building ruptured and leaked into 244-TX DCRT. (700 gallons)
12-22-90	WHC-TANKFARM-1990-373	ON	Frozen water line in 244-BX instrument building ruptured and leaked into 244-BX DCRT. (550 gallons)

Table D3.2-1. Tank Farm Events, Off-Normal (ON) and Critiques. (11 sheets)

Date	Event #	Event Type	Event Description
12-23-90	WHC-TANKFARM-1990-376	ON	Raw water valve in 244-TX service pit ruptured due to freezing, leaked 1750 gallons into 244-TX DCRT.
1-1-91	WHC-TANKFARM-1991-001	ON	244-AR steam leak tripped fire alarm.
1-11-91	WHC-TANKFARM-1991-32	ON	241-AW primary exhaust fan restarted during testing, while personnel near by. "Near-miss" injury.
1-15-91	WHC-TANKFARM-1991-43	ON	702-A exhauster shutdown, standby fan out-of-service. Portable fan started, air-lift circulators stopped. (AY and AZ tanks)
1-23-91	WHC-TANKFARM-1991-72	ON	Portable air compressor failure causes loss of inst. air at 244-AR vault.
1-23-91	WHC-TANKFARM-1991-74	ON	Above ground sensing line failed causing 101-AY high pressure alarm.
1-26-91	WHC-TANKFARM-1991-82	ON	Broken water line in BY-302 compressor building causes fire alarm.
1-28-91	WHC-TANKFARM-1991-85	ON	Annunciator panel failure @ 271-AP caused loss of AP tank farm alarms.
2-16-91	WHC-TANKFARM-1991-141	ON	101-SY pressure increased and level decreased due to venting.
2-28-91	WHC-TANKFARM-1991-175	ON	Sanitary water system underground leaks in 241-BY farm.
3-13-91	WHC-TANKFARM-1991-203	ON	101-SY hydrogen monitor vacuum pump failure.
3-14-91	WHC-TANKFARM-1991-206	ON	SX-106 liquid level increase beyond limit.
3-21-91	WHC-TANKFARM-1991-226	ON	241-AP primary exhauster failed causing pressurization in 105-AP tank.
4-8-91	WHC-TANKFARM-1991-1003	ON	241-A warm water sump level control out-of-service, not calibrated for four years.
4-9-91	WHC-TANKFARM-1991-1004	ON	241-A evacuation due to valving out instrument air line during maintenance.
4-9-91	WHC-TANKFARM-1991-1005	ON	TY-104 and 105 failed breather filters not replaced within time limit due to windy conditions.
4-23-91	WHC-TANKFARM-1991-1010	ON	244-AR stack CAM and record sampler vacuum pumps out-of-service.
4-30-91	WHC-TANKFARM-1991-1011	ON	Compressor failure causes loss of exhausters at 242-S and high pressure alarm at 102-SY tank.
5-16-91	WHC-TANKFARM-1991-1013	ON	High pressure alarm due to venting in 101-SY.
6-4-91	WHC-TANKFARM-1991-1018	ON	S-302-A catch tank level increase due to hose leak into diversion box. (90 gallons)
6-18-91	WHC-TANKFARM-1991-1019	ON	Control room unmanned during pumping of 102 and 109-BY tanks.
6-19-91	WHC-TANKFARM-1991-1020	ON	216-S-26 crib level 6" above limit.
6-21-91	WHC-TANKFARM-1991-1022	ON	241-BY drywells high radiation readings during 102 and 109-BY transfers.
6-22-91	WHC-TANKFARM-1991-1023	ON	Portable compressor seized, high pressure alarms tripped at 241-AW farm.
6-29-91	WHC-TANKFARM-1991-1026	ON	Power lost to 200-East Area during electrical storm.
7-16-91	WHC-TANKFARM-1991-1028	ON	Employee contaminated while taking liquid level readings at 152-AX.
8-6-91	WHC-TANKFARM-1991-1031	ON	Momentary power loss to 200-East and West Areas.
8-23-91	WHC-TANKFARM-1991-1035	ON	Many waste tank FIC instruments are out-of-service, they are not a priority item for maintenance.
8-26-91	WHC-TANKFARM-1991-1036	ON	Failure to obtain tank AN-103 level reading as required.
8-30-91	WHC-TANKFARM-1991-1037	ON	Water valve left open at 244-TX spilling 600 gallons on the ground.
9-6-91	WHC-TANKFARM-1991-1038	ON	Three employees reported vapor inhalation in 103-C farm.
9-16-91	WHC-TANKFARM-1991-1043	ON	Construction worker reported inhaling an unknown vapor in 241-C farm.
9-19-91	WHC-TANKFARM-1991-1045	ON	Failure to take liquid level reading at TK-003-CR vault.
10-4-91	WHC-TANKFARM-1991-1051	ON	Exceeded two-year limit on tank BX-104 dome deflection survey.
10-22-91	WHC-TANKFARM-1991-1054	ON	Tank 244-CR-003 Ph readings too low hydroxide concentration.

Table D3.2-1. Tank Farm Events, Off-Normal (ON) and Critiques. (11 sheets)

Date	Event #	Event Type	Event Description
11-12-91	WHC-TANKFARM-1991-1061	ON	Review determined that 88 tanks were not being monitored for temperature as required for non-watchlist tanks.
11-22-91	WHC-TANKFARM-1991-1065	ON	Tank 101-SY calculated heat loading exceeded OSD limits.
11-26-91	WHC-TANKFARM-1991-1067	ON	Front-end loader backed into and broke a thermocouple riser at T-108 tank.
11-28-91	WHC-TANKFARM-1991-1068	ON	AY-102 level increased during transfer from 244-CR-003 to AY-101.
12-4-91	WHC-TANKFARM-1991-1069	ON	101-SY level decrease and pressurization during tank venting.
12-4-91	WHC-TANKFARM-1991-1070	ON	76 counts per second spike found when lateral radiation scan completed on tank 103-A.
12-5-91	WHC-TANKFARM-1991-1071	ON	55 gallon drum exceeded requirements for 90-day storage.
12-6-91	WHC-TANKFARM-1991-1072	ON	Liquid level limit exceed for tank AN-103.
12-7-91	WHC-TANKFARM-1991-1074	ON	Water leak into AY service water pit during airlift circulator flush.
12-10-91	WHC-TANKFARM-1991-1075	ON	Employee exceeded weekly radiation exposure limit working in 151-S diversion box.
12-17-91	WHC-TANKFARM-1991-1077	ON	241-AN exhauster shutdown, attempts to start fans failed. Seven tanks had static flow for two hours.
12-20-91	WHC-TANKFARM-1991-1078	ON	Sample bottle exceeded 90-day storage requirement.
12-26-91	WHC-TANKFARM-1991-1082	ON	Data on 1-7-AN annulus leak detection record copied from previous shift. No new report recorded.
12-31-91	WHC-TANKFARM-1991-1085	ON	Air compressor failure leads to 241-SX exhauster shutdown.
1-1-92	WHC-TANKFARM-1992-01	ON	Truck at 241-TX farm picked up tumbleweeds on carriage, tumbleweeds ignited.
1-6-92	WHC-TANKFARM-1992-03	ON	Both leak detector systems for SY-101 lost. Probe failed while CAM was out-of-service.
1-24-92	WHC-TANKFARM-1992-09	ON	During a transfer line hydro test in 241-S farm, water leaked and drained into valve pit.
1-24-92	WHC-TANKFARM-1992-10	ON	C-105 and 106 exhauster failed.
2-25-92	WHC-TANKFARM-1992-15	ON	SX farm exhauster shutdown due to portable compressor shutdown when it ran out of fuel.
2-25-92	WHC-TANKFARM-1992-16	ON	Engineer tracing annunciator wires tripped airlift circulator alarm and farm high pressure alarm.
2-28-92	WHC-TANKFARM-1992-20	ON	While fueling a portable compressor at 241-BY, fuel was spilled on the ground.
2-28-92	WHC-TANKFARM-1992-23	ON	244-TX receiver tank over-filled due to bad instrumentation.
3-6-92	WHC-TANKFARM-1992-25	ON	Tank C-100 inadvertently transferred to 102-AW.
3-10-92	WHC-TANKFARM-1992-26	ON	DANGER tag at SY farm cleared without proper authorization.
3-24-92	WHC-TANKFARM-1992-29	ON	Operator backed a van into a riser and punctured the gas tank. Spilled fuel onto the ground.
4-2-92	WHC-TANKFARM-1992-31	ON	Hazardous substance in railcar not pumped at 204-AR within time limits.
4-20-92	WHC-TANKFARM-1992-32	ON	101-SY gas venting, level decreased about 9 inches.
4-29-92	WHC-TANKFARM-1992-36	ON	Transformer failure interrupts 241-S farm leak detection and level monitoring instruments.
5-14-92	WHC-TANKFARM-1992-40	ON	Transfer line SL-116 in 241-S farm, failed hydro test, leak sprayed out heat trace conduit.
5-14-92	WHC-TANKFARM-1992-41	ON	Small animals tracked contamination along the fence line of 241-AY farm.
6-10-92	WHC-TANKFARM-1992-45	ON	Attempting to hydro test transfer line SL-115, 200 gallons more than the calculated line holdup was added. Assume line failed.
6-12-92	WHC-TANKFARM-1992-46	ON	Attempted to hydro test transfer line SN-215, line did not hold pressure for 30 seconds. Assume line failed.
6-18-92	WHC-TANKFARM-1992-49	ON	Failure to comply with lock and tag requirements doing work in 241-TX farm.

Table D3.2-1. Tank Farm Events, Off-Normal (ON) and Critiques. (11 sheets)

Date	Event #	Event Type	Event Description
7-15-92	WHC-TANKFARM-1992-54	ON	Transfer made through diversion box which drains to catch tank A-302-A which level above 50%. Exceeded level limit.
7-20-92	WHC-TANKFARM-1992-56	ON	105/106-C exhauster CAM failed efficiency test due to moisture inside CAM.
7-28-92	WHC-TANKFARM-1992-57	ON	Improper installation of cryogenic vacuum pump on tank 103-C. Samples invalid because of pump location.
8-21-92	WHC-TANKFARM-1992-58	ON	Personnel entered SX farm without proper respiratory protection.
8-20-92	WHC-TANKFARM-1992-60	ON	High level of contamination in Liquid Observation Well in 104-SX tank.
9-3-92	WHC-TANKFARM-1992-63	ON	Increased pressure and decreased level during venting of 101-SY tank.
9-10-92	WHC-TANKFARM-1992-64	ON	101-SY venting seemed to have broken off one of four air lances in tank.
8-14-92	WHC-TANKFARM-1992-65	ON	Increased radiation readings in 241-C drywell.
9-19-92	WHC-TANKFARM-1992-67	ON	Lock and tag cleared from tank farm without proper authorization.
9-25-92	WHC-TANKFARM-1992-70	ON	Personnel contamination from working in 241-SY farm.
9-30-92	WHC-TANKFARM-1992-72	ON	During 106-AN to 102-AP transfer, 102-AW level increased. 3575 gallon discrepancy in tank level.
10-6-92	WHC-TANKFARM-1992-76	ON	Thermocouple tree stuck, then bent and broken while removing it from 101-SY.
10-7-92	WHC-TANKFARM-1992-77	ON	Unauthorized pressure increase needed to remove thermocouple tree from 101-SY tank.
10-19-92	WHC-TANKFARM-1992-78	ON	SX-103 level decrease exceeded limits.
10-19-92	WHC-TANKFARM-1992-79	ON	Seven deteriorated waste bags found in 241-S farm. Some broken and spilled on ground.
10-21-92	WHC-TANKFARM-1992-83	ON	AW-101 pressurization and level decrease. Tank placed on flammable gas watchlist.
11-6-92	WHC-TANKFARM-1992-85	ON	Aging waste temperature readings not taken because the data sheet was missing.
10-9-92	WHC-TANKFARM-1992-86	ON	SX-105 level decrease exceeded limits. Assume evaporation is cause.
10-22-92	WHC-TANKFARM-1992-87	ON	Procedure compliance deficiencies during 107-C vapor sampling.
12-3-92	WHC-TANKFARM-1992-88	ON	Personnel contamination during excavation in 241-SY tank farm.
12-8-92	WHC-TANKFARM-1992-90	ON	Periodic higher than normal radiation readings on AN-107 annulus CAM.
1-7-93	WHC-TANKFARM-1993-02	ON	Personnel contamination during piping grinding operation in 241-SY excavation.
1-13-93	WHC-TANKFARM-1993-06	ON	Packaged air lances in 241-SY farm exceeded 120-day storage limit.
1-15-93	WHC-TANKFARM-1993-08	ON	Transfer from 204-AR to 101-AY failed due to frozen jumpers in path.
1-21-93	WHC-TANKFARM-1993-10	ON	Air lance package leakage while in 241-SY farm.
1-26-93	WHC-TANKFARM-1993-14	ON	Transfer from 204-AR railcar to 101-SY made. Some of flow ended up in 102-AY.
2-2-93	WHC-TANKFARM-1993-16	ON	Pressurization and level decrease resulting from 101-SY venting.
2-1-93	WHC-TANKFARM-1993-17	ON	Fire in waste drum in 241-T due to welding activity catching paper towels on fire.
2-2-93	WHC-TANKFARM-1993-18	ON	204-AR ventilation fan failure, failed to re-start manually.
1-28-93	WHC-TANKFARM-1993-19	ON	Ammonia-like odor in 241-T farm.
2-4-93	WHC-TANKFARM-1993-20	ON	242-A circuits deenergized for modifications, control valve opened allowing raw water flow to 106-AW tank.
2-5-93	WHC-TANKFARM-1993-21	ON	Service water valve left open after flushing in 241-AX, caused unaccounted for raw water usage.

Table D3.2-1. Tank Farm Events, Off-Normal (ON) and Critiques. (11 sheets)

Date	Event #	Event Type	Event Description
2-12-93	WHC-TANKFARM-1993-24	ON	202-B tank level increase limit exceeded.
2-22-93	WHC-TANKFARM-1993-25	ON	Tank T-101 pumping schedule not met.
2-24-93	WHC-TANKFARM-1993-26	ON	Attempt to install shield plug in 101-SY riser found riser was not symmetrical. Mixer pump will have to be modified to fit in riser.
3-8-93	WHC-TANKFARM-1993-29	ON	Ammonia-like odors from 241-SY farm.
3-10-93	WHC-TANKFARM-1993-30	ON	Failure to return 104-BY ventilation system to service after testing. O.O.S. from Feb. 24 to Mar. 4.
3-17-93	WHC-TANKFARM-1993-31	ON	Aging waste ventilation system recirc. pump out-of-service, but not tagged out.
1-18-93	WHC-TANKFARM-1993-36	ON	103-BX level increase exceeded level criteria.
4-7-93	WHC-TANKFARM-1993-38	ON	Ammonia-like odors from 241-BX farm.
4-21-93	WHC-TANKFARM-1993-40	ON	102-T core sample casks uncontrolled.
5-10-93	WHC-TANKFARM-1993-47	ON	Raw water leak to ground at 107-C during and after raw water line pressure test.
5-24-93	WHC-TANKFARM-1993-49	ON	241-AP in-service exhauster heater breaker found open.
5-25-93	WHC-TANKFARM-1993-50	ON	Raw water valve left open after maintenance, puddle formed over 102-BY tank. Check valve failed, 3442 gallons spilled.
6-17-93	WHC-TANKFARM-1993-55	ON	Operator smelled foul odor in at 101-A, resulted in headache and dry throat.
6-26-93	WHC-TANKFARM-1993-58	ON	101-SY pressurized and level decrease during venting.
7-14-93	WHC-TANKFARM-1993-62	ON	Portable exhauster supporting 241-SY farm shutdown. Primary exhauster out-of-service. Tripped high pressure alarm.
7-29-93	WHC-TANKFARM-1993-65	ON	Work done on ferrocyanide and organic watchlist tank (TX-118) without electrically bonded tools.
7-31-93	WHC-TANKFARM-1993-68	ON	Unexplained raw water usage after flush of 241-AZ airlift circulators. 665 gallons unaccounted for.
8-8-93	WHC-TANKFARM-1993-70	ON	Attempt to start primary exhauster and shutdown backup exhauster results in high pressure alarm, 241-AN farm.
8-10-93	WHC-TANKFARM-1993-71	ON	Attempting to check for un unplugged drain, a rock was tied to a rope and lowered into open nozzle in tank. Contaminated personnel.
8-12-93	WHC-TANKFARM-1993-73	ON	Administrative hold on tank farm work was imposed due to lapses in management and employee accountability.
8-14-93	WHC-TANKFARM-1993-74	ON	Requirement exceeded for taking pressure readings in 241-SX farm.
8-16-93	WHC-TANKFARM-1993-75	ON	Personnel cut off tip of finger while changing nitrogen bottles in 241-SY farm.
8-17-93	WHC-TANKFARM-1993-76	ON	Personnel backed van into riser in 241-S farm. Ruptured fuel tank under van.
8-22-93	WHC-TANKFARM-1993-77	ON	Personnel failed to abort 101-SY mixer pump test when indicator failed.
8-26-93	WHC-TANKFARM-1993-78	ON	On numerous occasions the temperature data for watchlist tanks was not taken.
8-27-93	WHC-TANKFARM-1993-79	ON	101-SY tank atmosphere was pressurized momentarily after mixer pump operation.
9-2-93	WHC-TANKFARM-1993-81	ON	Personnel experienced headache and sore throat from unusual odors from 241-TX farm.
9-6-93	WHC-TANKFARM-1993-83	ON	Aging waste tank farm pressure recorder out of paper, violating an Operational Safety Requirement.
9-7-93	WHC-TANKFARM-1993-84	ON	Unexplained raw water usage in 241-AX farm.
9-26-93	WHC-TANKFARM-1993-88	ON	Continuous air monitor at 241-AY and AZ farm (Aging waste) failed.
10-25-93, 11-2-93	WHC-TANKFARM-1993-93	ON	Rollover of 101-SY tank waste caused shutdown of mixer pump due to high pressure trip. (2 occasions)
11-16-93	WHC-TANKFARM-1993-98	ON	241-SX sludge cooler exhauster operating with a vacuum beyond limits.

Table D3.2-1. Tank Farm Events, Off-Normal (ON) and Critiques. (11 sheets)

Date	Event #	Event Type	Event Description
11-23-93	WHC-TANKFARM-1993-100	ON	Low dP alarm for 241-SY exhauster second stage HEPA filter found disabled.
4-13-93	WHC-TANKFARM-1993-102	ON	241-SY ventilation filters not tested within 72 hours of maintenance, as required.
11-30-93	WHC-TANKFARM-1993-103	ON	Waste tank level requirement changed, 101-AW level exceeds new limit of 416".
12-2-93	WHC-TANKFARM-1993-106	ON	18-inch clay pipe discovered within the 110 foot buffer zone in 241-T farm. Pipe installed in 1943.
12-3-93	WHC-TANKFARM-1993-110	ON	Potential USQ concerning T-111 core samples containing uncharacterized reactive components.
12-10-93	WHC-TANKFARM-1993-111	ON	East/West vent station catch tank level limit exceeded.
12-6-93	WHC-TANKFARM-1993-112	ON	Lock and tag violation on electrical plug in DACS trailer in 241-SY farm.
12-15-93	WHC-TANKFARM-1993-114	ON	241-C farm breathing air carbon monoxide alarm trip due to sampling truck running next to compressor intake.
12-16-93	WHC-TANKFARM-1993-115	ON	U-107 tank added to flammable gas watchlist.
1-8-94	WHC-TANKFARM-1994-01	ON	Transfer not aborted as required when leak detector tripped.
1-26-94	WHC-TANKFARM-1994-04	ON	AN-105 annulus continuous air monitor removed from service without invoking surveillance as required.
1-27-94	WHC-TANKFARM-1994-05	ON	Failure to install required alarms in DCRTs.
2-1-94	WHC-TANKFARM-1994-06	ON	Steam trap failure in 241-SX farm causes steam plume.
2-10-94	WHC-TANKFARM-1994-07	ON	Primary ventilation lost at 241-AN farm for one hour. Pressures reached atmospheric, but did not go higher.
2-11-94	WHC-TANKFARM-1994-08	ON	Lack of filter paper in alpha radiation detector and faulty microswitch caused exhauster to trip in 241-SY farm. Portable exhauster started.
3-10-94	WHC-TANKFARM-1994-14	ON	Missed filter differential pressure readings in 241-AW and AP tank farms.
4-27-94	WHC-TANKFARM-1994-23	ON	Spurious shutdown signal at evaporator caused 2000 gallons of waste to dump back into 102-AW.
5-16-94	WHC-TANKFARM-1994-027	ON	East/West vent station catch tank level exceeded limit.
5-4-94	WHC-TANKFARM-1994-29	ON	Sample supporting line broke allowing sampling device to fall into 107-AN riser.
6-3-94	WHC-TANKFARM-1994-33	ON	Electrically "hot" taped wires touched terminal strip housing causing a breaker trip that tripped 241-AP primary exhauster. High pressure alarm tripped.
6-9-94	WHC-TANKFARM-1994-34	ON	Lock and danger tag on 101-SY mixer pump breaker left unlocked.
7-5-94	WHC-TANKFARM-1994-38	ON	Steam heat not returned to service after 241-SY exhauster maintenance.
8-5-94	WHC-TANKFARM-1994-40	ON	Electrical utilities severed power cable, lost ventilation in AN, AP, AW, and C farms, and 244-BX and 244-CR.
8-8-94	WHC-TANKFARM-1994-42	ON	Truck driver drove under steam line near 103-SY tank, striking steam line and knocking off insulating material.
8-19-94	WHC-TANKFARM-1994-45	ON	Feeder breaker to 241-AN farm opened, tripping both primary and annulus ventilation fans. Pressurized waste tanks.
8-19-94	WHC-TANKFARM-1994-46	ON	The Ph values for 102-AY and 104-AP samples were below 12. Hydroxide concentrations too low.
8-19-94	WHC-TANKFARM-1994-47	ON	106-S liquid level float missing, wire had corroded after being installed only two months.
8-25-94	WHC-TANKFARM-1994-48	ON	244-CR vault fan #2 out for repair, fan #1 removed from service due to vibration problems. Loss of both fans violates OSD requirements.
9-13-94	WHC-TANKFARM-1994-49	ON	241-SY continuous air monitor tripped and fan shutdown when testing. Procedure did not include trip bypass step. Tanks pressurized due to fan shutdown.
10-1-94	WHC-TANKFARM-1994-55	ON	241-AW primary ventilation shutdown, could not be restarted. Loss of confinement in farm.

Table D3.2-1. Tank Farm Events, Off-Normal (ON) and Critiques. (11 sheets)

Date	Event #	Event Type	Event Description
10-4-94	WHC-TANKFARM-1994-57	ON	101-AW tank had gas release event. Tank pressure increased, hydrogen concentration increased, and level decreased. Tank is on hydrogen watchlist.
10-26-94	WHC-TANKFARM-1994-59	ON	Transfer line SL-503 failed during transfer from 204-AR to 102-AY. Tripped leak detector in sluice pit on tank 102-AY.
11-2-94	WHC-TANKFARM-1994-60	ON	Excavators in 241-SY farm discovered, and subsequently punched a hole in the top of, an underground tank they did not know was there.
11-2-94	WHC-TANKFARM-1994-62	ON	During saltwell pumping of 109-BY a high radiation dose rate existed. Saltwell pump discharge also developed a leak.
11-16-94	WHC-TANKFARM-1994-64	ON	101-BX manual tape level readings not taken due to airborne activity in area.
12-8-94	WHC-TANKFARM-1994-67	ON	Main control power breaker tripped at 241-AN. Primary and annulus exhausters shutdown.
12-27-94	WHC-TANKFARM-1994-73	ON	104-SX LOW readings showed 102% of LFL and ammonia >700 PPM. Stopped work in area.
12-28-94	WHC-TANKFARM-1994-74	ON	106-AW exhaust isolation valve closed to watch position indicator. Pressurization alarm tripped.
12-29-94	WHC-TANKFARM-1994-75	ON	This occurrence covers many discoveries of suspect parts. Including 56 bolts in 241-U farm.
1-18-95	WHC-TANKFARM-1995-07	ON	241-SY portable exhauster shutdown while HPT was testing continuous air monitor. Primary system out-of service.
1-20-95	WHC-TANKFARM-1995-08	ON	Potential environmental regulatory deficiency exists due to unknown status of Miscellaneous Underground Storage Tanks.
1-26-95	WHC-TANKFARM-1995-11	ON	Rotary Mode Core Sampler was operated in an unapproved manner ("bumped" while in push mode) while sampling BY-106.
2-1-95	WHC-TANKFARM-1995-13	ON	Personnel failed to wear correct dosimetry (finger rings) while in 106-C sluice pit.
2-15-95	WHC-TANKFARM-1995-14	ON	Rotary Mode Core Sampler operated without proper detector in service.
2-17-95	WHC-TANKFARM-1995-15	ON	Electrical utilities personnel tripped off electrical power to East/West Areas while installing a microwave transfer trip.
2-22-95	WHC-TANKFARM-1995-16	ON	Installation of new level instrument in 104-AP resulted in current level indication below limit.
2-23-95	WHC-TANKFARM-1995-17	ON	Incorrect valve locked out in 241-TX, to replace air dryer and regulating valve.
1-30-95	WHC-TANKFARM-1995-18	ON	Tank B-103 breather filter isolated from tank by drywell. Tank in contact through other tanks in cascade.
2-13-95	WHC-TANKFARM-1995-20	ON	Propylene glycol leaked from the Rotary Mode Core Sampler truck causing an electrical short and resulted in a fire.
3-7-95	WHC-TANKFARM-1995-22	ON	Caution tag hung in 241-AN farm without authorization signature.
3-7-95	WHC-TANKFARM-1995-23	ON	Transfer from 204-AR to 102-AY leaked into A-350 catch tank, leak in 241-A-A pit nozzle.
3-13-95	WHC-TANKFARM-1995-26	ON	241-T farm breather filter valve discovered in the closed position.
3-16-95	WHC-TANKFARM-1995-27	ON	In preparation for taking a vapor sample from S-111, a valve that was "danger" tagged out for another job was opened.
3-24-95	WHC-TANKFARM-1995-31	ON	General operating condition; potential environmental regulatory deficiency: failure to remove liquids from catch tanks in a timely manner.
3-30-95	WHC-TANKFARM-1995-34	ON	WHC lock and tag removed from S-111 valves, but ICF KH locks and tags still hung. Violation of procedure.
3-29-95	WHC-TANKFARM-1995-35	ON	Auger rod incorrect length for C-101 auger sampling.
4-4-95	WHC-TANKFARM-1995-36	ON	Aging waste facility stack CAM functional test not completed within time limit.
4-11-95	WHC-TANKFARM-1995-39	ON	Rotary mode core sampling truck energized by 120 volts due to incorrect wiring. (no injuries occurred)
4-12-95	WHC-TANKFARM-1995-40	ON	Work done on TY-104 without using bonded tools as required.

Table D3.2-1. Tank Farm Events, Off-Normal (ON) and Critiques. (11 sheets)

Date	Event #	Event Type	Event Description
4-13-95	WHC-TANKFARM-1995-41	ON	Leak found by 244-A camera crew during B Plant transfer.
4-26-95	WHC-TANKFARM-1995-42	ON	Failure to meet weekly readings requirement for S-108 liquid observation well.
5-3-95	WHC-TANKFARM-1995-44	ON	241-AW pressurization alarm occurred during camera installation in 106-AW central pump pit.
5-2-95	WHC-TANKFARM-1995-45	ON	Subcontractor employee unescorted in 241-TX farm. Violated radiological controls.
5-6-95	WHC-TANKFARM-1995-47	ON	Rotary mode core sampling truck shielded receiver bent due to transversing the drilling rig while the receiver was in the stored position.
5-24-95	WHC-TANKFARM-1995-49	ON	Sampling done in U-103 tank without using the required bonded tools.
5-30-95	WHC-TANKFARM-1995-50	ON	Energized electrical wire struck during hand excavation near 102-AZ tank.
6-16-95	WHC-TANKFARM-1995-52	ON	Discovery of drug contraband in 241-SX instrument shack.
6-16-95	WHC-TANKFARM-1995-53	ON	Failure of mechanical interlock switches allowed rotation of rotary mode core sampler platform beyond design limits.
6-29-95	WHC-TANKFARM-1995-54	ON	242-T isolated, monitoring discontinued. Monitoring requirements were not changed, so discontinuing the monitoring violated the requirements.
5-15-95	WHC-TANKFARM-1995-56	ON	241-AW lockout installed without proper signature authorization.
7-25-95	WHC-TANKFARM-1995-64	ON	241-SY stack CAM high radiation alarm would not alarm on high radiation.
8-3-95	WHC-TANKFARM-1995-65	ON	Personnel exceeded weekly exposure limit working at BY-105.
8-4-95	WHC-TANKFARM-1995-66	ON	Rotary mode core sampler unable to retrieve complete sample from BY-108 due to failure to install the waste collection sampler in drill string.
8-7-95	WHC-TANKFARM-1995-67	ON	Diesel generator at BX/BY farm fuel leaked into soil.
8-29-95	WHC-TANKFARM-1995-70	ON	Vapor sample taken from B-110 instead of B-112. Person-in-charge was directing operation from outside farm and directed sampling truck to wrong tank.
8-31-95	WHC-TANKFARM-1995-72	ON	244-BX exhauster shutdown. Saltwell pumping from 103, 106, and 109-BX continued into DCRT without exhauster operation as required.
8-31-95	WHC-TANKFARM-1995-73	ON	Potential organic-nitrate chemical reaction discovered for 13 waste tanks. USQ evaluation in progress.
9-13-95	WHC-TANKFARM-1995-75	ON	Lockout at 102-AY airlift circulator valve had unsecured chain.
9-25-95	WHC-TANKFARM-1995-77	ON	241-SY exhauster shutdown, pressurization alarm.
9-27-95	WHC-TANKFARM-1995-78	ON	Core sampling in S-107 found vapor sample drill string reading 130% of Lower Explosive Limit (LEL). Tank headspace sample read 6% LEL.
10-4-95	WHC-TANKFARM-1995-81	ON	Transfer line SN-274 leaked during transfer between AX-B valve pit and 101-AN. Leak at flexible jumper connection. 2 gallons leaked.
10-3-95	WHC-TANKFARM-1995-82	ON	Result of personnel opening breaker at 241-S farm caused shutdown of backup exhauster at 241-SY.
10-5-95	WHC-TANKFARM-1995-86	ON	Implemented new criticality specifications for transfer systems without changing the Interim Safety Basis.
9-26-95	WHC-TANKFARM-1995-90	ON	Found 8000 gallons of liquid in 240-S-151 diversion box. Assume liquid from snow melt and rain, diversion box out of service since March, 1987.
10-19-95	WHC-TANKFARM-1995-91	ON	Incorrect transfer line filled for pressure test. SN-245 filled rather than SN-246.
10-23-95	WHC-TANKFARM-1995-93	ON	Gravel spreading truck entered and left Radiological Buffer Area in 241-TY farm without proper controls in place.
10-26-95	WHC-TANKFARM-1995-94	ON	Vapor sample of rotary mode core sampler drill string from BY-110 read 300% Lower Explosive Limit. Tank headspace sample read <1% LEL.

Table D3.2-1. Tank Farm Events, Off-Normal (ON) and Critiques. (11 sheets)

Date	Event #	Event Type	Event Description
10-31-95	WHC-TANKFARM-1995-96	ON	Mobile crane repositioned in 241-AN farm, crushed edge of electrical pull box.
11-2-95	WHC-TANKFARM-1995-97	ON	High pressure alarm at AW-106 tank. High vacuum alarm setpoint outside LCO limit.
11-6-95	WHC-TANKFARM-1995-99	ON	Potential National Fire Prevention Association (NFPA) code deficiency on push and rotary mode core sampling trucks.
11-9-95	WHC-TANKFARM-1995-100	ON	Waste drum at BX/BY Satellite Accumulation Area exceeded stay time limit.
11-13-95	WHC-TANKFARM-1995-101	ON	241-AZ annulus exhauster shutdown and started smoking.
11-15-95	WHC-TANKFARM-1995-105	ON	Grab sample from 102-AY contains less than the requirement for hydroxide.
11-21-94	WHC-TANKFARM-1995-109	ON	Pressure test of supernate transfer line SN-246 (yard line) failed, indicating loss of integrity.
12-5-95	WHC-TANKFARM-1995-111	ON	Unused 1.5" test riser in 241-TY farm found to contain 450% of LFL.
12-6-95	WHC-TANKFARM-1995-112	ON	AN farm exhauster pre-filter changeout occurred without required air sample taken prior to start of work.
12-11-95	WHC-TANKFARM-1995-114	ON	107-AN tank pressure instrument air line froze due to tripped breaker on heat trace line.
12-13-95	WHC-TANKFARM-1995-115	ON	High winds blew off the AN Farm Primary Ventilation System sheet metal cover, shearing the annulus filter differential pressure instruments when the cover came to rest against the annulus stack.
12-22-95	WHC-TANKFARM-1995-120	ON	Discrepancy found between the Operating Specifications Documents (OSD-T-151-00031) requirement for liquid level readings in Tank 102-S and the operator rounds sheets that had been completed.
1-4-96	WHC-TANKFARM-1996-002	ON	Psychometrics performed on 241-AN-tank farm without proper signatures on work package.
1-8-96	WHC-TANKFARM-1996-003	ON	Personnel skin contamination due to pumping leak detection pits in 241-AW farm without wearing any Personal Protective Equipment.
1-15-96	WHC-TANKFARM-1996-007	ON	Sampling results indicated the waste in DCRT 244-TX did not meet the requirements for hydroxide concentration.
1-17-96	WHC-TANKFARM-1996-009	ON	When lifting the quill rod portion of the rotary mode core sampler out of tank 109-U (a flammable gas watchlist tank) a mechanical spark was generated.
1-17-96	WHC-TANKFARM-1996-010	ON	During work in the 241-S tank farm to remove the above ground ventilation system ducting, the required surveys of the vacuum outlet HEPA filters had not been performed.
1-22-96	WHC-TANKFARM-1996-011	ON	Inadequate work release at 242-A Evaporator results in near-miss electrical incident.
1-30-96	WHC-TANKFARM-1996-012	ON	Pressure transmitter for tank 106-AW failed which disabled the alarm capabilities.
2-1-96	WHC-TANKFARM-1996-013	ON	Failed pressure switch caused shutdown of 241-SY primary exhauster.
2-7-96	WHC-TANKFARM-1996-014	ON	Decontamination spray wand was being tested when a leaking connection sprayed contamination on the operator. To be used on tank 107-AN camera.
2-9-96	WHC-TANKFARM-1996-015	ON	209-E car and mixer room exhauster unscheduled shutdown due to a fire system valve opening.
2-13-96	WHC-TANKFARM-1996-016	ON	Discovered cesium-137 under 241-SX tank farm at the 110 foot depth. This is much deeper than previously assumed or modeled.
2-15-96	WHC-TANKFARM-1996-017	ON	While removing a thermocouple tree from 101-AZ the tree got stuck with 37 feet of it out, and 18 feet still in the tank. Operator used his hands to shake the tree and received a high radiation dose.
2-21-96	WHC-TANKFARM-1996-019	ON	Railcar was scheduled to have 1000 to 1500 gallons pumped into it at T-Plant. It was found to have 15,000 to 18,000 gallons in it instead of the 1000 to 1500 gallons.

Table D3.2-1. Tank Farm Events, Off-Normal (ON) and Critiques. (11 sheets)

Date	Event #	Event Type	Event Description
3-8-96	WHC-TANKFARM-1996-022	ON	The AY-02A pit center cover block was removed for pit upgrade. Cores had been drilled in it, and cracks were appearing, making the structural integrity questionable. To be replaced.
3-7-96	WHC-TANKFARM-1996-023	ON	Plugged instrument air line to 101-AY pressure instruments, caused failure of remote monitoring.
3-18-96	WHC-TANKFARM-1996-026	ON	Unauthorized low flying helicopters performing aerial radiological surveys over 241-A, AW, AX, AY, AZ, and C farms.
3-20-96	WHC-TANKFARM-1996-027	ON	Discovered no pressure on 204-AR Fire Suppression System when conducting fire system tests.
3-21-96	WHC-TANKFARM-1996-028	ON	101-SY mixer pump operated with no ammonia monitoring to the DACS system. One monitor was out of service, the other failed during the pump run.
4-9-96	WHC-TANKFARM-1996-032	ON	241-SY primary exhauster shutdown automatically for no apparent reason. Tanks did not pressurize.

This page intentionally left blank.

Table D3.2-2. Summary of Occurrences. (33 sheets)

OCCURRENCE NUMBER	DISCOVERY DATE	DESCRIPTION OF EVENT	EVENT CAUSE
72-26	04/20/1972	WASTE TRANSFER LINE THAT FLOWS TO 241-A-152 LEAKED INTO ENCASEMENT, THEN THRU COVER BLOCK JOINTS TO GROUND.	WASTE LINE FAILED, ENCASEMENT DRAINS PLUGGED.
72-49	07/06/1972	IRONWORKER-RIGGER PREPARING TO RELEASE A JAM, CABLE LET GO AND BROKE HIS FINGER.	ERROR IN JUDGMENT WHEN WORKING AROUND PINCH POINTS.
72-54	08/11/1972	BROKE 6-INCH SANITARY WATER LINE WITH BACKHOE.	PERSONNEL ERROR, FAILURE TO NOTE WATER LINE USING DETAILED DRAWING.
72-67	10/29/1972	MISROUTED 3,700 GALLONS OF PAS TO TANK 101-AY INSTEAD OF 003-CR.	PERSONNEL ERROR/INCORRECT SETTING FOR TRANSFER ROUTE MADE AT 151-AX DIVERTER STATION.
72-72	11/20/1972	LEAK FROM TRANSFER LINE DURING FLUSHING CAUSED SPRAY UP THROUGH VALVE OPERATOR HOLES IN VALVE PIT COVER.	GASKET FAILURE IN VALVE PIT.
73-1	01/08/1973	LIVE 13.8 KV LINE DOWN NEAR 244 UR, LINE WAS FLASHING AND BURNING.	WIRE BROKE FROM APPARENT FATIGUE ON WIRE FROM COLD WEATHER AND VIBRATION.
73-45	07/05/1973	BACKHOE RAN OVER AND BROKE A FLANGE ON A BELOW GRADE RISER ON A TRANSFER LINE AT 241-T TANK FARM. WATERY LIQUID WAS SEEN SEEPING FROM THE GROUND.	PIPE FLANGES ON TRANSFER LINES AT T-FARM WERE NOT ADEQUATELY MARKED.
73-73	11/01/1973	FAILURE OF A HEATER IN 241-TX-118 VENTILATION EXHAUST CAUSED LOADING OF PRIMARY FILTER.	MECHANICAL FAILURE OF OFF-GAS HEATER.
73-78	11/14/1973	DURING TRANSFER FROM 107-S TO 102-S THE TRANSFER LINE PLUGGED AND WASTE BACKED UP AND FLOWED OUT THE TANK RISER ONTO THE GROUND.	APPARENT PLUGGING OF TRANSFER LINE BY CRYSTALLIZED MATERIAL.
73-80	11/15/1973	POSSIBLE TANK DOME OVERLOADING AFTER WASTE SPILL IN S-FARM. SOIL WAS PLACED OVER THE SPILL AND POSSIBLY OVERLOADED 102-S AND 103-S DOMES.	PROCEDURE/ WEIGHT OF COVER SOIL WAS NOT KNOWN PRIOR TO COVERING THE TANKS.
73-82	11/21/1973	RAIN AND ROTTING TIMBERS CAUSED SUBSIDENCE OF 216-B-12 CRIB, CRIB REMOVED FROM SERVICE.	DEGRADATION OF CRIB OVER TIME.
73-86	12/11/1973	EMPLOYEE ENTERED THE AREA OF AN OPEN 42" RISER ON 118-TX TANK WITHOUT RESPIRATOR OR LIFE BELT.	PERSONNEL FAILURE TO FOLLOW PROCEDURE CONCERNING ENTRANCE TO AREA WITH OPEN RISER.
74-9	02/15/1974	NEW LEVEL LIMITS ESTABLISHED FOR WASTE TANKS IN AUGUST, 1973, FOUND THAT THERE WERE 19 TANKS THAT EXCEEDED THE NEW LIMITS, 8 TANKS STILL EXCEEDED THE LIMIT ON 2/15/74.	EVAPORATOR OUTAGES HAVE PREVENTED EMPTYING THE TANKS AS RAPIDLY AS SCHEDULED.
74-16	03/09/1974	LARGE AMOUNT OF FOAM (FROM SLUDGE ACIDIFICATION) IN 244-AR VAULT TANK 001 MIGRATED INTO TANKS 002, 004 AND TO THE VESSEL VENT HEADER, WHICH FAILED THE HEPA FILTER.	INCREASED FOAM DEVELOPED DUE TO A RISE IN pH DURING ACIDIFICATION.
74-21	03/27/1974	UNEXPLAINED DECREASE OF 0.3 INCHES IN WASTE TANK 105-S.	UNKNOWN.
74-22	03/24/1974	UNEXPLAINED DECREASE OF 0.45 INCHES IN WASTE TANK 112-S.	UNKNOWN.
74-23	04/03/1974	UNEXPLAINED DECREASE OF 1 1/2 INCHES IN WASTE TANK 110-TX.	UNKNOWN.
74-26	04/08/1974	UNEXPLAINED DECREASE OF 0.30 INCHES IN WASTE TANK 112-BX.	UNKNOWN.
74-27	04/05/1974	UNEXPLAINED DECREASE OF LEVEL IN WASTE TANK 107-BY.	UNKNOWN.
74-28	04/10/1974	UNEXPLAINED DECREASE OF 3 1/2 INCHES IN WASTE TANK 102-TX.	UNKNOWN.
74-29	04/07/1974	WASTE TANK 109-TX EXCEEDED TEMPERATURE INCREASE LIMIT OF 22oC (40oF) IN EIGHT DAY PERIOD.	RESTART OF EVAPORATOR FEED TO THIS TANK AND INADEQUATE RESPONSE TIME DID NOT ALLOW MIXING PHENOMENA TO DEVELOP.

Table D3.2-2. Summary of Occurrences. (33 sheets)

74-30	03/31/1974	FAILURE TO OBTAIN MONTHLY SAMPLES FROM TANK 102-AY, THE SPARE BOILING WASTE TANK IN 200 EAST AREA	PERSONNEL ERROR, FAILURE TO FOLLOW ADMINISTRATIVE CONTROLS.
74-31	04/13/1974	FAILURE TO OBTAIN FIC GAUGE READINGS IN 241-T FARM AS REQUIRED.	MECHANICAL FAILURE. ELECTRICAL SHORT AND RESULTING MCC FIRE (CAUSED BY BIRD NEST IN MCC ENCLOSURE) PREVENTED TAKING TANK LIQUID LEVEL READINGS.
74-32	04/18/1974	INSTRUMENT POWER OUTAGE IN 241-S TANK FARM CAUSED BY PERSONNEL AUGURING A TEST HOLE TO FIND A PIPING LEAK.	PERSONNEL FAILURE. EMPLOYEE FAILED TO HAND DIG PRIOR TO USING THE AUGER. CABLES WERE NOT IN THE LOCATION INDICATED ON THE TANK FARM DRAWING.
74-37	05/03/1974	DURING A TRANSFER THE LEVEL IN 102-BY DROPPED 10 INCHES, INCREASED 10 3/4 INCHES IN TANK 111-BX. LEVEL IN 111-BX EVENTUALLY DROPPED 3/4 INCH (CONSIDERED SIGNIFICANT LEVEL DECREASE).	LEVEL DECREASE BELIEVED TO BE CAUSED BY STABILIZATION OF THE CRUST SURFACE AFTER TRANSFER.
74-38	05/03/1974	SIGNIFICANT RADIATION READINGS IN A LEAK DETECTION LATERAL BELOW TANK 111-SX.	APPARENT TANK LEAK, TANK SALTWELL PUMPED AFTER LEAK INDICATED.
74-41	05/19/1974	244-AR VAULT VESSEL VENT SECONDARY HEPA FILTERS FOUND WET AND PERFORATED AFTER REPLACEMENT OF PRIMARY FILTERS.	ASSUMED DEPOSITION OF AMMONIUM NITRATE ON FILTERS FROM B PLANT DAMAGED FILTERS.
74-43	05/27/1974	3800 GALLONS OF PUREX ACIDIFIED SLUDGE MISTRANSFERRED FROM 244-AR VAULT TO 106-A TANK INSTEAD OF TO CR VAULT.	PERSONNEL FAILURE. DIVERTER SETTINGS INCORRECT.
74-44	05/27/1974	150 GALLONS OF NITRIC ACID ADDED TO TANK 002 AT 244-AR VAULT INSTEAD OF TANK 001. ADDED TO 10,500 GALLONS OF SLUDGE SLURRY.	PERSONNEL ERROR. OPENED WRONG VALVE OUT OF CHEMICAL MAKEUP TANK.
74-88	06/13/1974	INCREASED ACTIVITY IN TANK 106-TY DRY WELL INDICATES TANK LEAK.	MECHANICAL FAILURE. TANK DEGRADATION OVER TIME. (SUSPECTED LEAKER IS 105-TY)
74-101	06/25/1974	INCREASED ACTIVITY IN DRY WELLS BY TANK 103-TY.	ASSUMED TANK LEAKAGE, DEGRADATION OVER TIME.
74-102	06/26/1974	INCREASED ACTIVITY IN TANK 105-TY DRY WELL INDICATES TANK LEAK.	TANK LEAKAGE, DEGRADATION OVER TIME.
74-103	06/27/1974	SUSPECTED DEFORMED TANK LINER IN TANK 201-B.	CORRODED BAFFLE DROPPED INTO TANK BELOW A RISER, CONJECTURED TO BE A LINER DEFORMATION.
74-104	06/27/1974	INCREASED ACTIVITY IN TANK 101-BX DRY WELL INDICATES TANK LEAK.	TANK LEAKAGE, DEGRADATION OVER TIME.
74-106	07/01/1974	INCREASED ACTIVITY IN TANK 103-BY DRY WELL INDICATES TANK LEAK.	TANK LEAKAGE, DEGRADATION OVER TIME.
74-108	07/07/1974	INCREASED ACTIVITY IN DRY WELL AND TANK 109-T LEVEL DROP INDICATES TANK LEAK.	TANK LEAKAGE, DEGRADATION OVER TIME.
74-112	07/18/1974	INCREASED ACTIVITY IN TANK 110-B DRY WELL INDICATES TANK LEAK.	TANK LEAKAGE, DEGRADATION OVER TIME.
74-117	08/07/1974	INCREASED ACTIVITY IN TANK 105-BY DRY WELL INDICATES TANK LEAK.	TANK LEAKAGE, DEGRADATION OVER TIME.
74-120	08/13/1974	INCREASED ACTIVITY IN DRY WELLS BETWEEN TANKS 104-C AND 105-C INDICATES POSSIBLE TANK LEAK.	ASSUMED FROM OTHER INDICATIONS THAT THESE TANKS ARE SOUND, NO LEAKAGE. LEAK INDICATION COULD BE FROM EARLIER LEAK IN SPARE FILL LINE TO 105-C.
74-121	08/16/1974	RADIOACTIVE LIQUID LEAKED FROM SAMPLE CUP RISER IN TANK 001-AR AT 244-AR VAULT DURING pH METER STANDARDIZATION.	CAUSE WAS NOT DETERMINED.

Table D3.2-2. Summary of Occurrences. (33 sheets)

74-123	08/16/1974	INCREASED ACTIVITY IN TANK 102-BY DRY WELL INDICATES TANK LEAK.	ASSUMED FROM OTHER INDICATIONS THAT THIS TANK IS SOUND. READINGS COULD BE FROM LATERAL MIGRATION OF SOIL CONTAMINATION.
74-127	08/26/1974	CONTAMINATION SPREAD DURING CLEANUP OF 154-B DIVERSION BOX.	CONTAMINATION SPREAD DUE TO WIND-CARRY OF PARTICULATE.
74-129	09/04/1974	INCREASED ACTIVITY IN TANKS 113 AND 114-TX DRYWELL INDICATE TANK LEAK.	ACTIVITY ASSUMED TO BE FROM TANK LEAKAGE OR SOIL CONTAMINATION MIGRATION.
74-130	09/16/1974	CONTAMINATION SPREAD DURING TRANSFER OF 53 FOOT LONG TUBE BUNDLE HEAT EXCHANGER FROM TANK 104-A TO 101-A.	PERSONNEL ERROR/PROCEDURE.
74-132	09/24/1974	UNEXPLAINED DECREASE OF 1 INCH OF LIQUID LEVEL IN TANK 110-SX.	UNKNOWN.
74-134	10/09/1974	SPILL OF 1 1/2 GALLONS OF RADIOACTIVE LIQUID WHEN OPENING A STRAINER TO ISOLATE A STEAM COIL FOR MAINTENANCE IN 241-A FARM.	PERSONNEL ERROR/PROCEDURE. PIPEFITTER ASSUMED GAUGE WAS INCORRECT WHEN IT SHOWED 20 PSIG REMAINING IN STRAINED AFTER DRAIN OPENED. THEN PLUG UNPLUGGED.
74-141	10/28/1974	INCREASED ACTIVITY IN TANK 101-B DRY WELL INDICATES TANK LEAK.	TANK LEAKAGE, DEGRADATION OVER TIME.
74-144	11/05/1974	CONTAMINATION SPREAD FROM OPEN PUMP PIT ON TANK 106-A DURING REMOVAL OF A FAILED JUMPER. THE JUMPER WAS DROPPED AND CONTAMINATION SPLASHED UP OVER THE PIT WALL.	PROCEDURE, NOT SUFFICIENT CONTAINMENT PROVIDED WHILE PUMP PIT OPEN.
74-148	11/22/1974	INCREASED ACTIVITY BETWEEN TANKS 108-C AND 109-C.	ASSUMED MIGRATION OF SOIL CONTAMINATION.
74-151	12/02/1974	LIQUID LEVEL IN TANK 102-SX DECREASED 1 INCH AFTER A TRANSFER INTO TANK.	ASSUMED TANK SETTLING TOOK LONGER THAN USUAL.
74-152	12/05/1974	LIQUID LEVEL IN TANK 112-TX DECREASED 4 1/2 INCHES AFTER A FLUSH OF MANUAL LIQUID LEVEL TAPE.	ASSUMED A DEPRESSION FORMED IN TANK CRUST AS A RESULT OF WATER FLUSHING THROUGH MANUAL TAPE.
74-153	12/13/1974	INCREASED ACTIVITY IN TANK 107-BY DRY WELLS.	ASSUMED MIGRATION OF SOIL CONTAMINATION.
74-154	12/11/1974	MISROUTING OF WASTE DURING TRANSFER FILLED 241-EW VENT STATION CATCH TANK FROM 18.75 INCHES TO 73.75 INCHES.	PERSONNEL ERROR. TFO PLANNER-SCHEDULER ERRED IN NOZZLE CONNECTION PROCEDURE INSTRUCTIONS.
74-159	12/30/1974	UNDERGROUND ELECTRICAL CABLE POWERING 244-AR VAULT COOLING WATER EFFLUENT DIVERSION VALVE BROKEN BY BACKHOE EXCAVATION.	PERSONNEL ERROR. BACKHOE OPERATOR CLEARED TRENCH WITHOUT HAND DIGGING TAKING PLACE.
75-02	01/06/1975	INCREASED ACTIVITY BETWEEN TANKS 105-T AND 108-T.	ASSUMED THAT TANK 105-T IS SOUND, AND 108-T IS QUESTIONABLE DUE TO OTHER MEASUREMENTS.
75-03	01/06/1975	244-AR VAULT HAD AN ACTIVATION OF EMERGENCY VENTILATION SYSTEM, AND VESSEL VENT SYSTEM SHUTDOWN.	MECHANICAL FAILURE, OVERHEATED CIRCUIT BREAKER IN ELECTRICAL SUPPLY TO AIR COMPRESSOR.
75-04	01/07/1975	INCREASED ACTIVITY BETWEEN TANKS 110-SX AND 111-SX.	UNKNOWN.
75-05	01/08/1975	ACTIVATION OF 244-AR EMERGENCY VENTILATION SYSTEM SEVERAL TIMES IN MORNING.	HIGH WINDS CAUSED DIFFERENTIAL PRESSURE FLUCTUATIONS THAT TRIPPED EMERGENCY SYSTEM.
75-09	01/31/1975	241-U FARM TANK DOME LOADING INDICATES THE SOIL COVER OVER THE TANKS IS ONE FOOT HIGHER THAN AS-BUILT DRAWINGS, POTENTIAL OVERLOAD.	DRAWINGS WERE INCORRECT, BUT DOME LOADINGS ARE WITHIN LIMITS.
75-15	02/13/1975	SPILL OF CONTAMINATION TO GROUND DURING OVERGROUND TRANSFER FROM TANK 105-BY.	PERSONNEL ERROR, MATERIAL FAILURE. PLASTIC WRAPPED JOINTS ON OVERGROUND LINE DID NOT HOLD THE LEAK.

Table D3.2-2. Summary of Occurrences. (33 sheets)

75-16	02/13/1975	RELEASE OF CONTAMINATION OUTSIDE 244-AR VAULT WHEN WASHING CANYON FLOOR AND WATER PUDDLED UNDER DOOR. A LOSS OF BUILDING NEGATIVE PRESSURE ALLOWED CONTAMINATION OUTSIDE.	PERSONNEL ERROR. FLOOR WASHED DURING PLANNED USE OF EMERGENCY GENERATOR, WHICH CAUSED A TEMPORARY LOSS OF BUILDING NEGATIVE PRESSURE.
75-17	02/18/1975	DECREASE IN LIQUID LEVEL IN TANK 101-T AFTER TRANSFER INTO TANK.	ASSUMED STABILIZATION OF SURFACE AFTER TRANSFER.
75-19	02/18/1975	DECREASE IN LIQUID LEVEL IN TANK 112-BY.	ASSUMED TANK CRUSTING IS ERRATIC.
75-29	03/21/1975	FAILURE OF SECONDARY FILTERS IN 244-AR VAULT VESSEL VENT SYSTEM, FILTERS WERE WET AND WARPED.	UNKNOWN. (ALSO SEE 74-41 OCCURRENCE)
75-33	03/31/1975	244-AR VAULT COOLING WATER DIVERSION VALVE DIVERTED AFTER RADIATION ALARM IN CANYON.	RADIATION ALARMS ATTRIBUTED TO WELDING IN AREA.
75-35	04/04/1975	EMPLOYEE FORCED A SAMPLER INTO TANK AFTER THE SAMPLER HAD REACHED THE BOTTOM OF TANK. SAMPLER BOWED, WHICH CAUSED IT TO BE DIFFICULT TO REMOVE THRU RISER, BREAKING THE SAMPLE WIRE.	PERSONNEL ERROR, DEVIATION FROM PROCEDURE.
75-36	04/06/1975	OVERFILLED TANK 002-CR IN 271-CR, TANK LIMIT IS 13,000 GALLONS, FILLED WITH 16,947 GALLONS.	PERSONNEL ERROR. OPERATOR PUSHED PUMP BUTTON INSTEAD OF AGITATOR BUTTON.
75-38	04/09/1975	TANK 101-BY LIQUID LEVEL EXCEEDED LEVEL LIMIT.	UNCONTROLLED WATER ADDITIONS DURING PUMP INSTALLATION, TESTING AND FLUSHING.
75-39	04/08/1975	LEAKAGE FROM TANK 104-A, AS NOTED IN LATERALS BENEATH TANK.	MECHANICAL FAILURE, TANK LINER FAILED.
75-41	04/08/1975	LIQUID LEVEL IN TANK 107-U DECREASED .80 INCHES.	ASSUMED TRANSFER INTO TANK CAUSED FOAMING WHICH HAD TO STABILIZE.
75-42	04/09/1975	TRANSFER OF WASTE WITH pH OF 4.2 FROM 244-AR TO TANK 107-U. pH LIMIT SHOULD BE GREATER THAN 9.	ASSUMED PERSONNEL ERROR.
75-44	04/08/1975	LIQUID LEVEL IN TANK 104-TX DECREASED .70 INCHES.	ASSUMED LEVEL DECREASE DUE TO ADDITION OF HOT WASTE AND THE RESULTING EVAPORATION VIA EXHAUSTER OPERATION.
75-47	04/09/1975	INCREASED ACTIVITY IN TANK 104-AX DRY WELL.	ASSUME THAT ACTIVITY IS DUE TO SHALLOW CONTAMINATION FROM EARLIER FAILED TRANSFER LINES, SURFACE SPILLS, OR OTHER DIRECT BURIED FACILITY FAILURES.
75-51	04/18/1975	LIQUID LEVEL IN TANK 108-T DECREASED .60 INCHES.	UNKNOWN.
75-54	04/17/1975	INCREASED RADIATION ACTIVITY IN LATERAL BENEATH TANK 112-SX.	ASSUMED THAT THE ACTIVITY IS DUE TO PRE-EXISTING CONTAMINATION.
75-56	04/18/1975	INCREASED ACTIVITY IN TANK 107-BY DRY WELLS.	UNKNOWN, COULD BE TANK LEAK OR REDISTRIBUTION OF SOIL CONTAMINATION.
75-57	04/25/1975	LIQUID LEVEL IN TANK 107-TX DECREASED .80 INCHES.	ASSUME LEVEL DECREASE DUE TO INCREASED EVAPORATION FROM EXHAUSTER OPERATION.
75-58	04/30/1975	INCREASED ACTIVITY IN TANK 101-B DRY WELL.	UNKNOWN, COULD BE TANK LEAK OR MIGRATION OF SOIL CONTAMINATION.
75-60	05/16/1975	INCREASED ACTIVITY IN TANK 102-AX DRY WELL.	UNKNOWN.
75-61	05/23/1975	HIGH dP ACROSS TANK 118-TX EXHAUSTER HEPA FILTERS.	PERSONNEL ERROR. FAILURE TO RESPOND TO INCREASING dP INDICATION AND CHANGE FILTERS.
75-64	06/07/1975	LIQUID LEVEL IN TANK 106-TX DECREASED 5 1/2 INCHES.	UNKNOWN.
75-67	06/26/1975	LIQUID LEVEL IN TANK 110-U DECREASED .50 INCHES.	TANK DECLARED A LEAKER ON 7/9/75.

Table D3.2-2. Summary of Occurrences. (33 sheets)

75-68	06/25/1975	INCREASED ACTIVITY IN LATERAL BENEATH TANK 112-SX.	TANK IS A LEAKER, INCREASED ACTIVITY COULD BE DUE TO SHIFT IN SOIL CONDITIONS.
75-69	06/25/1975	INCREASED ACTIVITY IN LATERAL BENEATH TANK 115-SX.	LIMITED CHANGE, READINGS TAKEN WITH A NEW, MORE SENSITIVE INSTRUMENT.
75-78	07/16/1975	JUMPER CONNECTOR FAILURE DURING WASTE TRANSFER FROM 107-TX TO 103-U. JUMPER LOCATED IN 153-TXR DIVERSION BOX.	MECHANICAL FAILURE OF FLEX JUMPER, THREADS STRIPPED.
75-82	07/29/1975	VEHICLE ACCIDENT IN 241-U TANK FARM, STRUCK AN 8-INCH WELL CASING THAT PROTRUDED UP 18-INCHES. PICKUP TRUCK HAD TO BE LIFTED OFF THE CASING.	PERSONNEL ERROR. CUT A TURN SHORT, NON-ESSENTIAL TANK FARM TRAFFIC NEEDS TO BE ELIMINATED.
75-87	07/31/1975	INCREASED ACTIVITY IN TANK 101-B DRY WELL.	UNKNOWN, COULD BE FROM PREVIOUS SOIL CONTAMINATION.
75-85	08/05/1975	EXCESSIVE LIQUID LEVEL IN TANK 105-A, LIMIT EXCEEDED BY 4 1/2 INCHES.	PERSONNEL ERROR, ACCIDENTAL RAW WATER DISCHARGE TO TANK.
75-86	07/24/1975	MINOR INJURY WHILE LIFTING A COVER PLATE WITH CRANE AT 104-TX PUMP PIT.	PERSONNEL ERROR. WORK BEGUN PRIOR TO CRANE LOAD BEING SECURED.
75-89	08/15/1975	SHARP DECREASE IN TANK 103-SX LEVEL FOLLOWING TRANSFER FROM 106-SX.	ASSUMED TRANSFER OF 100,000 GALLONS OF DILUTE 242-S FEED BROKE DOWN THE HEAVY CRUST FORMATION IN TANK.
75-90	08/17/1975	INCREASED ACTIVITY IN TANK 102-AX DRY WELL.	ASSUMED MIGRATION OF SOIL CONTAMINANTS.
75-92	08/20/1975	244-AR VAULT VESSEL VENT SYSTEM SHUTDOWN DUE TO HIGH dP ACROSS FILTER.	PERSONNEL ERROR. TANK 001-AR pH EXCEEDED LIMITS CAUSING FOAM THAT CARRIED OVER TO VENTILATION SYSTEM.
75-94	06/18/1975	WASTE DRUM CONTAINING GREATER THAN 200 GRAMS OF PLUTONIUM STORED AT THE ASPHALT STORAGE PAD.	PERSONNEL ERROR. FAILURE TO FOLLOW ADMINISTRATIVE PROCEDURE.
75-97	08/22/1975	UNPLANNED WASTE TRANSFER FROM 102-A TANK TO 101-A TANK.	PERSONNEL ERROR. INADVERTENT ENERGIZING OF 102-A PUMP INSTEAD OF 101-A PUMP.
75-98	08/15/1975	EXCESSIVE DOME LOADING IN TANK FARMS A, AX, AY, AZ, BX, BY, AND TX.	PERSONNEL ERROR. IDENTIFIED BY TOPOGRAPHIC SURVEYS.
75-101	08/09/1975	LIQUID LEVEL DECREASE OF .70 INCHES IN TANK 107-TX FOLLOWING TRANSFER OUT OF TANK.	ASSUMED LEVEL DECREASE DUE TO EVAPORATION VIA EXHAUSTER.
75-102	09/17/1975	BURIAL OF SIX DRUMS OF POTENTIALLY EXPLOSIVE MATERIAL IN BURIAL TRENCH.	PERSONNEL ERROR. FAILURE TO FOLLOW DISPOSAL PROCEDURES.
75-108	09/29/1975	LIQUID LEVEL LIMIT EXCEEDED IN TANK 110-S, INCREASED 9 INCHES IN FIVE MONTHS.	SUSPECTED UNKNOWN CHEMICAL PHENOMENON CAUSING TANK CONTENTS GROWTH.
75-109	09/30/1975	LIQUID LEVEL LIMIT EXCEEDED IN TANK 111-S, INCREASED 10 INCHES IN FIVE MONTHS.	SUSPECTED UNKNOWN CHEMICAL PHENOMENON CAUSING TANK CONTENTS GROWTH.
75-110	10/02/1975	RADIATION ALARM IN 101-AY "B" LEAK DETECTION PIT AFTER TRANSFER FROM 152-AX DIVERTER STATION CATCH TANK.	UNKNOWN, TRANSFER PIPELINE MAY HAVE LEAKED.
75-111	10/03/1975	2200 GALLON WASTE TRANSFER THROUGH OPEN JUMPER NOZZLE FLOWED VIA PUMP PIT DRAIN INTO INCORRECT TARGET TANK.	PERSONNEL ERROR. JUMPER NOT INSTALLED FOR TRANSFER, ROUTE NOT CHECKED.
75-115	10/11/1975	SMALL, SLOW, LEAK OCCURRED IN OVERGROUND TRANSFER LINE BETWEEN 108-C AND 103-C.	MECHANICAL FAILURE. LEAK AT CONNECTOR HEAD TO TRANSFER PUMP.
75-116	10/11/1975	LIQUID LEVEL DECREASE IN TANK 102-SX AFTER 242-S SLURRY TRANSFER IN.	SUSPECTED SLURRY BUILDUP AT ENTRANCE TO TANK, THEN SLOWLY FLOWED OUT OVER WASTE SURFACE.
75-117	10/09/1975	LIQUID LEVEL DECREASE IN TANK 110-BY AFTER TRANSFER IN.	INTRODUCTION OF STEAM AND HOT WATER TRANSFER LINE FLUSH SEEMS TO CAUSE A LEVEL DROP IN TANK.

Table D3.2-2. Summary of Occurrences. (33 sheets)

75-118	10/12/1975	LIQUID LEVEL INCREASE IN TANK 110-SX AFTER TRANSFER OUT.	SUSPECT A DEPRESSED AREA AROUND PUMP OCCURRED DURING TRANSFER IS SLOWLY FILLING IN.
75-119	10/14/1975	401-SX BUILDING VESSEL VENTILATION CONDENSATE COOLING WATER EXCEEDED RADIONUCLIDE SPECIFICATIONS.	UNKNOWN, BUT SUSPECTED FAILED CONDENSER.
75-127	11/09/1975	MISROUTING OF TRANSFER INTO TANK 102-AY INSTEAD OF 103-A.	PERSONNEL ERROR. USED WRONG PROCEDURE FOR SECOND PHASE OF TRANSFER.
75-130	11/14/1975	CONTAMINATION SPREAD IN PARKING AREA NEAR A FARM VENTILATION BUILDING. EXHAUSTS A, AX, AY, AND AZ FARMS.	UNKNOWN, ASSUME SOURCE IS A FARM VENTILATION STACK.
75-132	11/10/1975	LIQUID LEVEL IN TANK 111-BY DECREASED 1 INCH OVER FOUR DAYS.	SUSPECT LEVEL LOST VIA EVAPORATION, AND PROBLEM WITH DIFFICULTY IN READING TANK LEVEL.
75-134	11/21/1975	MISROUTED WASTE TRANSFER FROM 104-SX TO 101-SX PIT.	PERSONNEL ERROR. OPERATOR CHANGED VALVE SETTINGS WHILE WALKING THROUGH A PROCEDURE.
75-135	10/31/1975	A FARM PROCESS CONDENSATE pH TOO LOW.	SUSPECT pH PROBLEM FROM 102-AY STEAM COIL CONDENSATE.
75-141	12/02/1975	SIGNIFICANT MATERIAL BALANCE DISCREPANCY AFTER TRANSFER FROM TANK 102-C TO 103-C.	UNKNOWN, SUSPECT LEVEL GAUGE ANOMALIES A RESULT OF THE CHARACTER OF THE MATERIAL SURFACE IN TANK 102-C.
75-145	12/19/1975	POSSIBLE TRANSFER PIPING LEAKAGE DURING TRANSFER FROM TANK 103-B TO 110-SX.	UNKNOWN, MATERIAL BALANCE PROBLEM WAS NOT RESOLVED.
75-146	12/26/1975	LIQUID LEVEL IN TANK 114-TX DECREASED 11.25 INCHES.	SUSPECT A SHIFT IN SURFACE BEING CONTACTED BY THE LEVEL PROBE.
75-147	12/30/1975	INCREASED ACTIVITY IN TANK 101-T DRY WELL.	SUSPECT ACTIVITY IS FROM A MIGRATION OF SOIL CONTAMINATION.
76-04	01/09/1976	SIGNIFICANT RADIATION READINGS IN AN EXCAVATION SITE WHERE PERSONNEL WERE WORKING DUE TO A WASTE TRANSFER NEARBY.	PERSONNEL ERROR. RISK TO PERSONNEL FROM WASTE TRANSFER NOT ADEQUATELY CONSIDERED.
76-05	01/16/1976	LIQUID LEVEL IN TANK 101-S DECREASED MORE THAN 1 INCH.	SUSPECT A COLLAPSE OF FOAM AFTER A RECENT TRANSFER INTO TANK.
76-06	01/17/1976	LIQUID LEVEL DECREASE IN TANK 106-TX FOLLOWING A FLUSH OF THE LEVEL MONITORING TAPE.	SUSPECT A BUILDUP OF CRUST ON THE MANUAL TAPE PLUMB.
76-08	01/20/1976	INCREASED ACTIVITY IN TANK 104-AX DRY WELL.	ASSUMED MIGRATION OF SOIL CONTAMINATION.
76-14	01/29/1976	LIQUID LEVEL IN TANK 109-C DECREASED .90 INCHES.	ASSUME LEVEL CHANGE INDICATION DUE TO BUILDUP OF SOLIDS ON TAPE PLUMMET.
76-15	01/27/1976	CROSS-COUNTRY TRANSFER LINE PLUGGED DURING TRANSFER FROM 107-S TO 109-B AFTER PUMP SHUTDOWN DUE TO POWER LOSS.	PLUG DUE TO CUTTING DILUTION WATER DURING TRANSFER.
76-21	02/18/1976	WIND SWEPT TUMBLEWEEDS FORCED A VALVE OPEN SPILLING RAW WATER INTO 241-TX-155 DIVERSION BOX, AND SEVERAL CATCH TANKS AND INTO 20 OPEN NOZZLES. SPILLED 35,000 GALLONS.	ASSUME THAT WIND SWEPT TUMBLEWEEDS FORCED OPEN AN L-SHAPED VALVE HANDLE.
76-22	02/17/1976	RAW WATER SPILL (UOR 76-21) CAUSED LIQUID LEVEL INCREASE BEYOND LIMIT IN TANK 103-TY, A KNOWN LEAKER.	LEVEL INCREASE CAUSED BY OVERFLOW FROM CATCH TANK TX-302-B.
76-23	02/17/1976	LIQUID LEVEL DECREASE IN DIVERSION BOX 155-TX AND CATCH TANK TX-302-B AFTER RAW WATER SPILL (UOR 76-21).	ASSUME WATER LEVEL DECREASE DUE TO LEAKS IN DIVERSION BOX-CATCH TANK STRUCTURE.
76-24	02/23/1976	STEAM USED INSTEAD OF AIR AFTER TRANSFER LINE FLUSH.	PERSONNEL ERROR. FAILURE TO FOLLOW PROCEDURE.
76-25	02/26/1976	OPERATOR INJURED HIS FOOT WHEN HE SLIPPED AS A CAISSON WAS BEING LIFTED OUT OF THE GROUND AT 241-BX TANK FARM.	PERSONNEL ERROR. OPERATOR TRIED TO PULL FALLEN WOODEN BARRICADE FROM HOLE, AND SLIPPED INTO HOLE.
76-30	03/10/1976	LIQUID LEVEL INDICATION DECREASED FOR 152-AX DIVERTER STATION CATCH TANK DURING WASTE TRANSFER.	MECHANICAL FAILURE. APPARENT FAILURE OF LEVEL INSTRUMENTATION.
76-31	03/17/1976	LIQUID LEVEL IN TANK 112-BY DECREASED 2 1/2 INCHES.	ASSUMED CRUST HAS SHIFTED CAUSING LEVEL DECREASE INDICATION.

Table D3.2-2. Summary of Occurrences. (33 sheets)

76-36	03/23/1976	LIQUID LEVEL IN TANK 102-BY DECREASED 1 INCH.	ASSUMED CRYSTAL BUILDUP ON LEVEL PLUMMET CAUSED LEVEL INDICATION CHANGE.
76-38	03/26/1976	LIQUID LEVEL IN TANK 108-TX DECREASED 1 INCH.	ASSUMED SALT BUILDUP ON FIC PLUMMET.
76-39	03/22/1976	LIQUID LEVEL IN TANK 108-SX INCREASED, EXCEEDING THE .50 INCH CRITERIA.	UNKNOWN. TANK IS OUT-OF-SERVICE, A KNOWN LEAKER.
76-40	03/23/1976	LIQUID LEVEL IN TANK 105-SX INCREASED 2.1 INCHES.	ASSUMED SLURRY GROWTH, TYPICAL OF 242-S SLURRIES.
76-41	02/29/1976	RADIATION INCREASE IN 102-AX LEAK DETECTION PIT.	WATER IN LEAK DETECTION PIT EVAPORATED, RADIATION INDICATION INCREASED AS PIT BOTTOM WAS EXPOSED.
76-42	03/23/1976	LIQUID LEVEL IN TANK 111-C INCREASED, EXCEEDING .50 INCH CRITERIA.	UNKNOWN, ASSUME ERRATIC LEVEL READINGS DUE TO PROBLEM WITH OBTAINING GOOD CONTACT WITH SURFACE.
76-45	03/31/1976	LIQUID LEVEL IN TANK 110-S INCREASED 2.3 INCHES.	ASSUMED SLURRY GROWTH, TYPICAL OF 242-S SLURRIES.
76-46	03/29/1976	103-AX PUMP RUN WITHOUT FLOW TO BEARINGS DUE TO MISVALVING OF COOLING WATER TO 101-AX PUMP.	PERSONNEL ERROR, FAILURE TO FOLLOW VALVING PROCEDURE.
76-47	04/07/1976	TANK 115-TX REUSED AS A SALT WELL LIQUOR RECEIVER AFTER BEING DECLARED REMOVED-FROM-SERVICE.	PERSONNEL ERROR. FAILURE TO FOLLOW TANK IN-SERVICE ADMINISTRATIVE CONTROLS.
76-48	04/12/1976	DURING JUMPER INSTALLATION IN 241-A TANK FARM, RADIATION MONITOR RECOMMENDED WORK HALT DUE TO WIND, OPERATIONS SUPERVISOR DIRECTED THAT ONE MORE CONNECTOR HEAD BE INSTALLED TO FINISH THE JOB.	PERSONNEL, POLICY CONFLICT OF ASSIGNED AUTHORITY.
76-49	04/14/1976	LIQUID LEVEL IN TANK 105-TY INCREASED 32 INCHES.	LEVEL INDICATION INCREASE DUE TO REPLACING THE ROD PLUMMET WITH A DOUGHNUT PLUMMET.
76-50	04/19/1976	LIQUID LEVEL IN TANK 114-TX INCREASED 2.25 INCHES.	ASSUME LEVEL CHANGE DUE TO DRAINBACK OF LIQUID ON SALTCAKE AT HIGHER ELEVATIONS.
76-51	04/14/1976	LIQUID LEVEL IN TANK 113-SX INCREASED 1.5 INCHES.	SUSPECT THE LEVEL PLUMMET IS CONTACTING AN OLD LEVEL TAPE.
76-52	03/24/1976	LIQUID LEVEL IN TANK 105-S INCREASE EXCEEDED CRITERIA.	ASSUME SLURRY GROWTH, TYPICAL OF 242-S SLURRIES.
76-53	04/14/1976	LIQUID LEVEL IN TANK 102-TX INCREASED 2 INCHES.	ASSUME MATERIAL GROWTH ON TAPE PLUMMET.
76-55	04/08/1976	TRANSFER TO 244-AR MADE OF MATERIAL WITH HIGH H+ CONCENTRATION.	PERSONNEL ERROR. MISINTERPRETATION OF SPECIFICATION, FAILURE TO FOLLOW PROCEDURE.
76-56	04/09/1976	RADIATION ACTIVITY INCREASE IN TANK 106-T DRY WELL EXCEEDS CRITERIA.	MIGRATION OF CONTAMINATION FROM PREVIOUS TANK LEAK.
76-59	04/20/1976	RADIATION ACTIVITY INCREASE IN TANK 104-AX DRY WELL EXCEEDS CRITERIA.	MIGRATION OF CONTAMINATION FROM PREVIOUS EXHAUST HEADER LEAK.
76-60	04/20/1976	INCREASED ACTIVITY IN TANK 107-T DRY WELL.	ASSUME DISPERSION MECHANISM IN SOIL OF PREVIOUS CONTAMINATION.
76-61	04/25/1976	SPILLED 500 GALLONS OF WATER WHEN OVERGROUND LINE FROM 104-TX TO 108-TX PUMP PIT CONNECTION FAILED.	MECHANICAL. HOSE CONNECTION FAILED.
76-62	04/26/1976	LIQUID LEVEL IN TANK 105-U INCREASED 2.4 INCHES.	ASSUME SLURRY GROWTH, TYPICAL OF 242-S SLURRIES.
76-64	04/29/1976	CONTAMINATION RELEASE WHEN A PILOT HOLE WAS DRILLED IN A FLUSHED OUT TRANSFER PIPE, BEING READIED FOR REROUTING.	TRAPPED AIR IN THE HEAT TRACED LINE PUSHED OUT LIQUID WHEN THE HOLE WAS DRILLED IN THE PIPE.
76-66	05/05/1976	LIQUID LEVEL IN TANK 106-TX INCREASED GREATER THAN CRITERIA.	LEVEL TAPE WAS FLUSHED AND A CRUSTED ICICLE WAS REMOVED, LEVEL WAS THEN NORMAL.
76-67	05/05/1976	LIQUID LEVEL IN TANK 109-U INCREASED GREATER THAN CRITERIA.	ASSUME THAT SLUDGE IS FORMING ON TANK LIQUID SERVICE.

Table D3.2-2. Summary of Occurrences. (33 sheets)

76-68	04/20/1976	RADIATION ACTIVITY INCREASE IN TANK 101-BX DRY WELL EXCEEDED CRITERIA.	MIGRATION OF CONTAMINATION FROM PREVIOUS LEAK FROM PUMP CASING.
76-69	03/30/1976	CHANGE IN SURFACE LEVEL READING IN TANK 117-TX EXCEEDS CRITERIA.	CHANGING AREA OF MEASUREMENT. LEVEL PLUMMET HAD BEEN STRIKING MOUND OF DIATOMACEOUS EARTH IN THE CENTER OF THE TANK, NEW READINGS WERE TAKEN IN A DIFFERENT LOCATION.
76-70	05/10/1976	LIQUID LEVEL IN TANK 101-S DECREASE EXCEEDED CRITERIA.	ASSUME THE SURFACE LEVEL IS TOO DRY TO GET AN ACCURATE READING, FLUSHES OF TAPE PLUMMET HAVE WASHED OUT A DEPRESSION IN WASTE SURFACE.
76-71	05/10/1976	LIQUID LEVEL IN TANK 203-T INCREASED 1.25 INCHES.	ASSUME THAT THE INCREASE WAS A TEMPORARY PHENOMENON WHICH FOLLOWED A SALT WELL TRANSFER.
76-72	05/07/1976	PERSONNEL ENTERED BX TANK FARM WITHOUT USING PROTECTIVE CLOTHING.	PERSONNEL ERROR. FAILURE TO FOLLOW TANK FARM ENTRANCE PROCEDURE.
76-73	05/05/1976	MONITORING OF 101-A DRY WELL NOT PERFORMED ON SCHEDULE.	PERSONNEL ERROR. A DRILLING RIG WAS IN THE WAY SO THAT THE SURVEILLANCE COULD NOT BE MADE.
76-74	05/17/1976	RADIATION ACTIVITY INCREASE IN TANK 110-U DRY WELL.	ASSUME MIGRATION OF PREVIOUS SOIL CONTAMINATION.
76-76	05/22/1976	LIQUID LEVEL IN TANK 204-T INCREASED 1.25 INCHES.	INCREASE FOLLOWED A SALT WELL TRANSFER, ASSUME A DRAIN DOWN FROM OUTLYING WASTE SURFACES.
76-77	05/24/1976	LIQUID LEVEL IN TANK 106-U INCREASED 1.10 INCHES.	ASSUME A BUILDUP OF CRUST OVER TIME.
76-80	05/27/1976	LIQUID LEVEL IN TANK 108-U INCREASED 1.05 INCHES.	ASSUME INCREASE IS DUE TO DRAINAGE FROM EXHAUST SYSTEMS CONDENSATE.
76-81	05/28/1976	LIQUID LEVEL IN TANK 107-S DECREASED 0.5 INCHES.	DECREASE IN LEVEL IS APPARENTLY DUE TO EVAPORATIVE LOSS AND DROP IN TEMPERATURE OF THE LIQUID WASTE.
76-83	06/02/1976	LIQUID LEVEL IN TANK 103-SX INCREASED 2.10 INCHES.	ASSUME LEVEL INCREASE IS TYPICAL OF 242-S SLURRY SALT CAKE BEHAVIOR.
76-85	06/08/1976	LIQUID LEVEL IN TANK 104-SX INCREASED 2.10 INCHES.	ASSUME LEVEL INCREASE IS TYPICAL OF 242-S SLURRY SALT CAKE BEHAVIOR.
76-87	06/13/1976	LIQUID LEVEL IN TANK 111-TX INCREASED 1.25 INCHES.	LEVEL INCREASE DUE TO IN-LEAKAGE FROM A STEAM LEAK INTO A FLUSH PIT.
76-89	06/21/1976	LIQUID LEVEL IN TANK 105-U DECREASE EXCEEDED CRITERIA.	ASSUME LEVEL DECREASE IS DUE TO A BREAKDOWN OR PENETRATION OF FLOATING MATERIAL ON TANK WASTE SURFACE.
76-90	06/28/1976	SURFACE LEVEL IN TANK 110-U INCREASED 1.0 INCH.	ASSUME A SURFACE ANOMALY OR TEMPORARY MATERIAL BUILDUP ON THE GAUGE PLUMMET.
76-91	06/29/1976	LIQUID LEVEL IN TANK 110-SX DECREASED 0.75 INCHES.	ASSUME DECREASE DUE TO EVAPORATION AND ERRATIC READINGS USING MANUAL TAPE.
76-94	07/20/1976	LIQUID LEVEL IN TANK 108-C DECREASED 0.50 INCHES.	ASSUME SURFACE LEVEL SETTLING FOLLOWING SALT WELL PUMPING.
76-95	07/23/1976	LIQUID LEVEL IN TANK 101-S DECREASED 1.10 INCHES.	ASSUME DECREASE DUE TO EVAPORATION AND ERRATIC READINGS DUE TO SURFACE CONDITION.
76-96	07/28/1976	LIQUID LEVEL IN TANK 103-SX DECREASED 1.6 INCHES.	ASSUME DECREASE IS DUE TO LIQUEFACTION OF THE CRUST AFTER A 60,000 GALLON TRANSFER FROM 110-SX.
76-97	07/08/1976	LIQUID LEVEL IN TANK 106-TX INCREASED 1.25 INCHES.	ASSUME INCREASE IS DUE TO BUILDUP ON THE GAUGE PLUMMET.
76-98	07/08/1976	LIQUID LEVEL IN TANK 102-S INCREASED 1.20 INCHES.	ASSUME INCREASE IS DUE TO SLUDGE FORMATION TYPICAL OF 242-S FEED.

Table D3.2-2. Summary of Occurrences. (33 sheets)

76-99	07/08/1976	LIQUID LEVEL IN TANK 115-TX INCREASED 1.25 INCHES.	UNKNOWN.
76-100	07/13/1976	RADIATION ACTIVITY INCREASE IN TANK 104-A LATERALS.	ASSUME MIGRATION OF PREVIOUSLY LEAKED WASTE.
76-101	07/16/1976	LIQUID LEVEL IN TANK 114-TX INCREASE EXCEEDED CRITERIA.	INCREASE DUE TO GAUGE CONTINUITY REPAIR.
76-102	07/20/1976	LIQUID LEVEL IN TANK 109-TX DECREASED, POSSIBLY EXCEEDING CRITERIA.	DECREASE IS DUE TO EVAPORATION AND TEMPERATURE DROP OF LIQUID WASTE.
76-103	07/20/1976	LIQUID LEVEL IN TANK 104-TX DECREASED 0.55 INCHES.	ASSUME LEVEL DECREASE IS DUE TO WASTE TEMPERATURE DROP.
76-109	07/28/1976	SURFACE LEVEL IN TANK 102-BX EXCEEDED LEVEL LIMIT.	LEVEL READINGS ARE ERRATIC DUE TO SURFACE IRREGULARITIES.
76-115	08/24/1976	PERSONNEL AND EQUIPMENT CONTAMINATION DURING PUMP REMOVAL FROM TANK 103-A.	PERSONNEL AND PROCEDURE ERRORS. PUMP BASE NOT SUPPORTED SO IT MOVED DURING TRANSFER, CONTAMINATION WAS DISLODGED.
76-118	08/31/1976	CROSS-COUNTRY TRANSFER LINE V361 ENCASEMENT SWAB RISERS HAD ACTIVITY INCREASE.	POSSIBLE MIGRATION OF PREVIOUS CONTAMINATION.
76-119	08/31/1976	RADIATION ACTIVITY IN TANK 107-SX DRY WELL INCREASED.	ASSUME INCREASED ACTIVITY DUE TO MIGRATION OF SOIL CONTAMINATION.
76-124	09/14/1976	MAXIMUM LEVEL LIMIT IN TANK 105-A EXCEEDED.	PERSONNEL, PROCEDURE ERRORS. ADDED TOO MUCH WATER TO TANK DURING SPRINKLING OPERATION.
76-125	09/21/1976	SURFACE LEVEL IN TANK 104-SX INCREASED 3.05 INCHES.	ASSUME INCREASE DUE TO FLOTATION AND GROWTH OF SALT CRUST FOLLOWING SLURRY RECEPTION.
76-126	09/21/1976	LIQUID LEVEL IN TANK 106-S INCREASED 3.0 INCHES.	SUSPECTED TRANSFER LINE VALVE IN-LEAKAGE IN SA VALVE PIT.
76-128	09/25/1976	APPARENT MAXIMUM LEVEL LIMIT EXCEEDED IN 002-AR SUMP.	LEVEL READINGS CHANGED WHEN THE ZIPCORD LEVEL GAUGE WAS REPLACED WITH A MANUAL TAPE REEL.
76-129	09/25/1976	APPARENT MAXIMUM LEVEL LIMIT EXCEEDED IN 003-UR SUMP.	LEVEL READINGS CHANGED WHEN THE ZIPCORD LEVEL GAUGE WAS REPLACED WITH A MANUAL TAPE REEL.
76-131	09/27/1976	RADIOACTIVE WASTE SPILL DURING JUMPER DISCONNECTION IN 105-U PUMP PIT.	MECHANICAL FAILURE. WASTE TRANSFER ONGOING IN ADJACENT TANK PRESSURIZED JUMPER DUE TO PARTIAL FAILURE OF A CLOSED VALVE.
76-132	09/21/1976	RADIATION INCREASE IN TANK 101-AY ANNULUS EXHAUST AIR.	ASSUME PROCESS CONDENSATE PASSING THROUGH CROSS-TIE BETWEEN ANNULUS VENT SYSTEM AND THE VESSEL VENT SYSTEM.
76-136	10/05/1976	RADIOACTIVE LIQUID SPRAYED FROM A CHECK VALVE UNDER REPAIR ONTO THREE PERSONNEL IN BX TANK FARM.	PERSONNEL ERROR. PREPARATIONS FOR THE REPAIR WERE INADEQUATE.
76-137	10/06/1976	LIQUID LEVEL IN TANK 108-TX DECREASE EXCEEDED CRITERIA.	ASSUME MANUAL TAPE PLUMMET IS CONTACTING A MOUND OF SALT IN THE TANK RESULTING IN ERRONEOUS READINGS.
76-138	10/04/1976	LIQUID LEVEL IN TANK 102-AY DECREASED 2.5 INCHES.	DECREASE IN TANK VOLUME DUE TO SHUTTING OFF STEAM TO HEATING COIL AND HIGH TEMPERATURES CAUSING EVAPORATION.
76-139	10/07/1976	INCREASED ACTIVITY IN CROSS-COUNTRY TRANSFER LINE V361 SWAB RISERS.	ASSUME CONTAMINATION IS FROM PREVIOUS LEAKS.
76-142	10/16/1976	LIQUID LEVEL IN TANK 108-BY INCREASED 3.5 INCHES.	ASSUME SURFACE SHIFT FROM SALT WELL PUMPING. ALSO, TAPE PLUMMET IS NESTLED IN A SWIRL OF OLD TAPE.
76-143	10/04/1976	APPARENT LEAK DETECTION PIT LEVEL INCREASES FOR TANK 102-AZ.	INSTRUMENT AIR VALVED OFF SOME INSTRUMENTS AND FAULTY TRANSMITTER. TANK NOT IN SERVICE AT TIME OF ANOMALIES.
76-146	10/25/1976	SURFACE LEVEL INDICATION IN TANK 108-SX INCREASED WHEN NEW MANUAL TAPE INSTALLED.	NEW TAPE NOT CALIBRATED CORRECTLY ACCORDING TO SYSTEM REFERENCE DRAWING.

Table D3.2-2. Summary of Occurrences. (33 sheets)

76-148	10/28/1976	LIQUID LEVEL IN TANK 102-AY BELOW MINIMUM LIMIT.	PROCEDURE. TANK PUMPED DOWN TO MINIMUM, THEN MAINTENANCE ON LEVEL TAPE OCCURRED, RESULTING IN LEVEL INDICATION BELOW MINIMUM LIMIT.
76-153	11/04/1976	LIQUID LEVEL IN TANK 105-C DECREASE EXCEEDED CRITERIA.	ASSUME LEVEL DECREASE DUE TO EVAPORATION.
76-155	11/08/1976	LIQUID LEVEL IN TANK 113-SX INCREASE EXCEEDED CRITERIA.	ASSUME LEVEL GAUGE PLUMMET MANIPULATION EFFECTS LEVEL INDICATION.
76-156	11/12/1976	LIQUID LEVEL IN TANK 115-TX INCREASED 3.0 INCHES.	ASSUME LIQUID DRAINING FROM SURROUNDING AREA OR SALT HAS SLUMPED INTO POOL AFTER TANK PUMPOUT.
76-163	12/03/1976	RADIATION ACTIVITY IN TANK 107-SX DRY WELL INCREASED.	ASSUME PREVIOUS LEAK CONTAMINATION IS MIGRATING.
76-164	12/03/1976	RADIATION ACTIVITY IN TANK 114-TX DRY WELL INCREASED.	ASSUME ACTIVITY IS DUE TO MIGRATION OF SOIL CONTAMINATION.
76-165	12/03/1976	WATER USED FOR 102-AX PUMP PIT WASH DOWN VAPORIZED AND CONTAMINATED THE GROUND AND VEHICLES NEAR THE PIT.	PERSONNEL ERROR. PERSONNEL DID NOT ANTICIPATE THE WATER FLASHING TO STEAM DUE TO COLD AMBIENT TEMPERATURE (22oF) AND LOW HUMIDITY.
76-172	12/15/1976	LIQUID LEVEL IN TANK 105-SX INCREASED 3.0 INCHES.	ASSUME SLURRY GROWTH TYPICAL OF 242-S EVAPORATOR SLURRIES.
76-174	12/21/1976	LIQUID LEVEL IN TANK 106-U DECREASED 0.5 INCHES.	UNKNOWN. ASSUME TANK IS SOUND.
76-175	12/28/1976	RADIATION ACTIVITY IN TANK 105-T DRY WELL INCREASED.	ASSUME LATERAL MIGRATION OF SOIL CONTAMINATION.
76-176	12/28/1976	RADIATION ACTIVITY IN TANK 101-T DRY WELL INCREASED.	ASSUME FURTHER MIGRATION OF PREVIOUS SOIL CONTAMINATION.
	01/03/1977	LIQUID LEVEL IN 001-TXR SUMP DECREASED 2.0 INCHES.	ASSUME RAINWATER DRAINAGE OR ZIPCORD LOCATION WAS THE CAUSE OF LEVEL INDICATION CHANGE.
77-01	01/10/1977	LIQUID LEVEL IN TANK 104-TX DECREASED .60 INCHES.	ASSUME LEVEL DECREASE ATTRIBUTABLE TO TEMPERATURE DROP.
77-06	01/14/1977	RADIOACTIVE ACTIVITY IN TANK 114-TX DRY WELL INCREASED.	ASSUME MIGRATION OF SOIL CONTAMINATION.
77-07	01/13/1977	LIQUID LEVEL IN TANK 102-SX INCREASED 3.0 INCHES.	ASSUME LEVEL CHANGE TYPICAL OF SLURRIES FROM 242-S EVAPORATOR.
77-08	01/13/1977	LIQUID LEVEL IN TANK 103-SX INCREASED 3.0 INCHES.	ASSUME LEVEL CHANGE TYPICAL OF SLURRIES FROM 242-S EVAPORATOR.
77-11	01/17/1977	LIQUID LEVEL IN TANK 101-S DECREASED .70 INCHES.	ASSUME CRUST MOVEMENT OR SURFACE DRYING COULD CAUSE LEVEL INDICATION CHANGES.
77-17	01/27/1977	SURFACE LEVEL IN TANK 104-SX INCREASED 3.01 INCHES.	ASSUME LEVEL INCREASE DUE TO FLOTATION AND GROWTH OF SALT CRUST.
77-18	01/27/1977	LIQUID LEVEL IN TANK 115-TX INCREASED 3.75 INCHES.	MECHANICAL FAILURE. BROKEN WATER VALVE IN FLUSH PIT DRAINING TO 115-TX.
77-19	01/31/1977	LIQUID LEVEL IN TANK 104-AX DECREASED 1.20 INCHES.	ASSUME LEVEL DECREASE DUE TO INCREASED EVAPORATION WITH INSTALLATION OF AN INLET AIR FILTER.
77-20	02/01/1977	LIQUID LEVEL IN TANK 107-TX DECREASED .40 INCHES.	ASSUME LEVEL DECREASE DUE TO REACTIVATING THE EXHAUSTER.
77-22	02/03/1977	TRANSFER PIPELINE EXPOSED AND STRUCK DURING EXCAVATION NEAR 244-AR VAULT.	PERSONNEL ERROR. PIPELINE LOCATION NOT NOTED ON EXCAVATION PERMIT.
77-23	02/07/1977	WATER LEAKAGE FROM 108-BX FLUSH PIT DRAINED TO TANK 108-BX.	MECHANICAL FAILURE. WATER VALVE BONNET BLEW OFF DURING FLUSH OF LINE BETWEEN 110-BY AND 105-BX.
77-25	02/08/1977	RADIATION ACTIVITY IN TANK 110-U DRY WELL INCREASED.	ASSUME MIGRATION OF SOIL CONTAMINATION.
77-29	02/22/1977	LIQUID LEVEL IN TANK 106-SX INCREASED 3 INCHES.	ASSUME LEVEL INCREASE TYPICAL OF WASTE SLURRIES RECEIVED FROM 242-S EVAPORATOR.
77-30	02/27/1977	LIQUID LEVEL IN TANK 111-U DECREASED .65 INCHES.	ASSUME LEVEL DECREASE DUE TO VOLUME CHANGES FROM TEMPERATURE DECREASE.

Table D3.2-2. Summary of Occurrences. (33 sheets)

77-31	02/28/1977	004-AR WEIGHT FACTOR REFERENCE LINE PLUGGED DURING TRANSFER, CAUSING OVERFILLING OF TANK AND AUTOMATIC SHUTDOWN OF VESSEL VENT SYSTEM.	MATERIAL. PLUGGED WEIGHT FACTOR REFERENCE LINE.
77-33	03/06/1977	LIQUID LEVEL IN TANK 103-SX INCREASED 3 INCHES.	ASSUME LEVEL INCREASE TYPICAL OF WASTE SLURRIES RECEIVED FROM 242-S EVAPORATOR.
77-34	03/02/1977	RADIATION ACTIVITY IN TANK 107-SX DRY WELL INCREASED.	ASSUME MIGRATION OF SOIL CONTAMINATION.
77-35	03/08/1977	LIQUID LEVEL IN TANK 202-C INCREASED >2.25 INCHES.	UNKNOWN. POSSIBLE RAW WATER IN-LEAKAGE CAUSE FOR LEVEL INCREASE.
77-36	03/10/1977	LIQUID LEVEL IN TANK 101-AX DECREASED >.50 INCHES.	ASSUME TANK INVENTORY OF WARM WASTE INCREASED EVAPORATIVE LOSS.
77-37	03/13/1977	LIQUID LEVEL IN TANK 102-SX INCREASED >3 INCHES.	ASSUME LEVEL INCREASE TYPICAL OF WASTE SLURRIES RECEIVED FROM 242-S EVAPORATOR.
77-43	03/25/1977	LIQUID LEVEL IN TANK 103-SX EXCEEDED MAXIMUM OPERATING LIMIT.	ASSUME LEVEL INCREASE DUE TO SALT CAKE GROWTH.
77-46	03/31/1977	LIQUID LEVEL IN 002-BXR-SUMP INCREASED >2 INCHES.	ASSUME LEVEL INCREASE DUE TO DRAINAGE OF RAINWATER.
77-52	04/12/1977	RADIOACTIVE CONDENSATE DRIPPING ONTO GROUND FROM 102-SY VENTILATION EXHAUST LINE.	MECHANICAL FAILURE. LEAKS DEVELOPED WITHIN THREE DAYS OF STARTING TO FILL NEW TANK.
77-53	04/15/1977	LIQUID LEVEL IN TANK 103-SX DECREASED >.5 INCHES.	ASSUME LATERAL MOVEMENT OF CRUST AFTER TRANSFER OUT OF TANK.
77-54	04/17/1977	RADIOACTIVE ACTIVITY ON 102-SY ANNULUS AIR SAMPLING FILTER FOLLOWING TRANSFER INTO TANK.	ASSUME RADIOACTIVE AEROSOL TRAVELED FROM TANK UP THROUGH PUMP PIT DRAIN AND INTO ANNULUS THROUGH ANNULUS PUMP PIT DUE TO NEGATIVE PRESSURE.
77-55	04/22/1977	LIQUID LEVEL IN TANK 107-TX INCREASED AND THEN DECREASED FOLLOWING CRANE WORK IN AREA.	UNKNOWN.
77-58	04/23/1977	LIQUID LEVEL IN 240-S-302 CATCH TANK DECREASED >2 INCHES.	ASSUME INCREASED EVAPORATION DUE TO NEGATIVE PRESSURE APPLIED TO TANK FROM THE REDOX PLANT.
77-59	04/24/1977	LIQUID LEVEL IN 002-UR TANK DECREASED 0.25 INCHES.	UNKNOWN.
77-60	04/26/1977	LIQUID LEVEL IN TANK 105-U DECREASED 1.35 INCHES.	ASSUME LEVEL INCREASE DUE TO SURFACE MATERIAL MOVEMENT OR SLOUGHING OFF OF MATERIAL COLLECTED ON FIC PLUMMET.
77-64	04/30/1977	MISROUTED WASTE TRANSFER INTO TANKS 101-SY, 103-SY, AND 103-SY LEAK DETECTION PIT, DURING TRANSFER FROM 111-U TO 102-SY.	PERSONNEL ERROR. TRANSFER MISROUTED.
77-65	04/29/1977	LIQUID LEVEL IN TANK TX-302-A CATCH TANK DECREASED >2 INCHES.	UNKNOWN.
77-66	05/04/1977	LIQUID LEVEL IN TANK 12-BX DECREASED >.5 INCHES.	FAILURE TO READJUST THE BASELINE FOLLOWING MAINTENANCE ON FIC PLUMMET.
77-68	05/10/1977	OVERFILLED TANK 103-S DURING TRANSFER FROM 242-S EVAPORATOR AND DIVERSION OF STEAM CONDENSATE.	PERSONNEL ERROR. STEAM CONDENSATE WAS INADVERTENTLY VALVE TO WASTE TANK INSTEAD OF CRIB.
77-69	05/10/1977	LIQUID LEVEL IN TANK 106-BY INCREASED 2 INCHES.	ASSUME FAILURE OF MANUAL LIQUID LEVEL MEASURING DEVICE.
77-70	05/11/1977	LIQUID LEVEL IN TANK 108-TX SHOWED DISCREPANCY OF 24 INCHES BETWEEN FIC AND THE MANUAL TAPE.	FIC TAPE WAS FABRICATED INCORRECTLY.
77-71	05/13/1977	LIQUID LEVEL IN TANK 102-SX DECREASED 2.95 INCHES AFTER TRANSFER FROM 103-S.	ASSUME MIXING SALT CAKE AND DILUTE WASTE IN TRANSFER CAUSED LEVEL DECREASE. NO CAUSE WAS CERTAIN.

Table D3.2-2. Summary of Occurrences. (33 sheets)

77-73	05/20/1977	LIQUID LEVEL IN TANK 106-U DECREASED 1.7 INCHES.	UNKNOWN. TANK CONTENTS ORDERED TRANSFERRED.
77-74	05/23/1977	LIQUID LEVEL IN TANK 105-SX DECREASED >.5 INCHES.	ASSUME THE FIC INSTRUMENT IS NOT IN CONTACT WITH LIQUID, EXPECTED TO VARY.
77-76	05/25/1977	LIQUID LEVEL IN TANK 110-BX DECREASED 1.25 INCHES.	ASSUME INACCURATE INSTRUMENT READING OF THE LIQUID LEVEL.
77-77	05/24/1977	LIQUID LEVEL IN TANK 107-BY INCREASED 2.25 INCHES.	ASSUME LEVEL INDICATION CHANGE DUE TO UNEVEN SURFACE OF WASTE.
77-78	05/25/1977	LIQUID LEVEL IN 151-AX DIVERTER STATION CATCH TANK EXCEEDED MAXIMUM LIMIT.	OVERFLOW TO CATCH TANK WAS ANTICIPATED, BUT EXCEEDED THE LEVEL LIMIT WAS NOT. PROCEDURE PROBLEM.
77-79	05/24/1977	OPERATIONS PERSONNEL CONTAMINATED WHILE INSERTING A NEW MANUAL TAPE IN TANK 106-SX.	PERSONNEL AND PROCEDURE ERROR. SHOULD HAVE WORN WATER PROOF GLOVES.
77-81	05/25/1977	LIQUID LEVEL IN TANK 103-B EXCEEDED REUSE CRITERION.	PERSONNEL AND PROCEDURE ERROR. EMPLOYEE FAILED TO USE REUSE PROCEDURE AND PROCEDURE HAD INADEQUATE APPROVAL FORM.
77-82	05/29/1977	LIQUID LEVEL IN TANK 106-SX INCREASED >3 INCHES.	ASSUME INCREASE DUE TO WASTE VOLUME EXPANSION, AND ACCUMULATION OF MATERIAL ON FIC LEVEL DEVICE.
77-84	05/31/1977	PERSONNEL CONTAMINATION WHILE REMOVING A SLUDGE WEIGHT FROM TANK 104-AX RISER.	PERSONNEL ERROR. IMPROPER REMOVAL OF PROTECTIVE CLOTHING.
77-87	06/06/1977	LIQUID LEVEL IN 002-TXR SUMP EXCEEDED LIMIT.	INCREASE DUE TO RAINWATER SEEPING INTO SUMP.
77-91	06/10/1977	RAW WATER LINE BREAK NEAR TANKS 112-SX AND 115-SX CAUSING 100 SQUARE FOOT PUDDLE.	MECHANICAL FAILURE. RAW WATER LINE BREAK.
77-92	06/09/1977	LIQUID LEVEL IN TANK 101-SY INCREASED 2.95 INCHES.	ASSUME WASTE EXPANSION IN TANK. RECEIVER OF 242-S EVAPORATOR CRYSTALLIZER.
77-93	06/11/1977	LIQUID LEVEL IN TANK 103-BX DECREASED .6 INCHES.	ASSUME REDISTRIBUTION OF SLUDGE FOLLOWING TRANSFER OF 46 INCHES.
77-100	06/21/1977	LIQUID LEVEL IN 011-BXR TANK DECREASED 1.25 INCHES.	UNKNOWN.
77-101	06/21/1977	LIQUID LEVEL 002-BXR SUMP INCREASED 2.25 INCHES.	ASSUME LEVEL INCREASE MAY BE DUE TO RAINWATER DRAINAGE.
77-103	12/07/1977	MANY INSTANCES OF RADIATION ACTIVITY IN TANK 103-TX DRY WELLS.	ASSUME MANY CAUSES OF INCREASED ACTIVITY: TANK LEAK, TANK OVERFILL, TRANSFER LINE LEAKAGE, MIGRATION OF SOIL CONTAMINATION, OR CONTAMINATION CARRIED BY MATERIAL CHANNELING.
77-105	06/29/1977	TANK 111-U OVERFILLED DURING A TRANSFER FROM 107-TX AND 102-U.	PERSONNEL ERROR. FAILURE TO NOTE LEVEL LIMIT, AND FAILURE TO RESPOND TO HIGH LEVEL ALARM.
77-107	06/30/1977	LIQUID LEVEL IN TANK 102-TX DECREASED 7 INCHES.	HOT WATER FLUSH OF LEVEL TAPE AND PLUMMET CAUSED LEVEL INDICATION CHANGE.
77-108	06/30/1977	LIQUID LEVEL IN TANK 106-A DECREASED 1 INCH.	ASSUME INCREASED EVAPORATION CAUSED LEVEL DECREASE.
77-109	07/05/1977	LIQUID LEVEL IN TANK 105-TX DECREASED 2.5 INCHES.	UNKNOWN.
77-114	05/06/1977	LIQUID LEVEL IN TANK 109-B DECREASED 3.5 INCHES.	ASSUME LEVEL INDICATION CHANGE CAUSED BY EROSION OF SALT CRUST UNDER THE PLUMMET CAUSED BY A FLUSH.
77-115	07/06/1977	LIQUID LEVEL IN TANK 107-TX DECREASED .5 INCHES.	LEVEL CHANGE CAUSED BY OPERATION OF A SUBMERSIBLE PUMP.
77-116	07/09/1977	LIQUID LEVEL IN TANK 102-TY DECREASED .8 INCHES.	ASSUMED SLUMPING OF SLUDGE FOLLOWING TANK PUMPING CAUSED THE LEVEL CHANGE.
77-117	07/07/1977	PIPEFITTERS WERE WORKING IN A FLUSH PIT THAT HAD A BACK UP OF PROCESS SOLUTION IN THE FLUSH LINE.	PERSONNEL ERROR. HPT THOUGHT THE WORK WOULD BE DONE IN A CLEAN PIT.

Table D3.2-2. Summary of Occurrences. (33 sheets)

77-118	07/13/1977	TANK 101-S OVERFILLED TO STANDARD LIMIT, WHICH IS 3 INCHES ABOVE THE OPERATING LIMIT.	PERSONNEL ERROR. PERSONNEL FAILED TO REALIZE THAT LEVEL WAS CLOSE TO THE LIMIT.
77-120	07/15/1977	LIQUID LEVEL IN TANK 108-U INCREASED 3.2 INCHES.	FAILURE TO RESET BASELINE AFTER FLUSH TRANSFERRED TO TANK, AND APPARENT TYPICAL GROWTH OF SLURRY FROM 242-S EVAPORATOR.
77-122	07/19/1977	RADIOACTIVE MATERIAL ON AIR SAMPLE FILTERS FROM TANKS 101-AZ AND 102-AZ.	APPARENT COLLECTION OF NATURALLY OCCURRING RADIONUCLIDES FROM A THORIUM SERIES.
77-125	07/21/1977	LIQUID LEVEL IN TANK 101-A DECREASED .7 INCHES.	APPARENT HIGHER RATE OF EVAPORATION DUE TO INCREASED TEMPERATURE FROM SLURRY ADDITION.
77-132	08/03/1977	OPERATION OF 002-BXR PUMP IN STRONG ACID SOLUTION.	PERSONNEL ERROR. ACID WAS TO HAVE BEEN NEUTRALIZED BEFORE PLACING PUMP IN SOLUTION.
77-133	08/03/1977	LIQUID LEVEL IN TANK 105-SX INCREASED 3.2 INCHES.	ASSUME LEVEL INCREASE DUE TO TYPICAL GROWTH OF 242-S SLURRIES.
77-136	08/06/1977	LIQUID LEVEL IN TANK 103-SX INCREASED 3.1 INCHES.	ASSUME LEVEL INCREASE DUE TO TYPICAL GROWTH OF 242-S SLURRIES.
77-137	08/08/1977	2200 GALLONS MISROUTED TO TANK 109-TX DURING 102-TY TO 105-TX TRANSFER.	VALVE IN 109-TX PIT COULD NOT BE COMPLETELY CLOSED DUE TO INTERFERENCE FROM JUMPER.
77-138	08/13/1977	LIQUID LEVEL IN TANK 114-TX INCREASED 2.25 INCHES.	ASSUME LIQUID IS SEEPING INTO DEPRESSION LEFT BY SALT WELL PUMPING.
77-139	08/13/1977	LIQUID LEVEL IN TANK 101-AX DECREASED 1 INCH.	UNKNOWN.
77-140	08/14/1977	LIQUID LEVEL IN TANK 109-U INCREASED 3.1 INCHES.	ASSUME LEVEL INCREASE DUE TO TYPICAL GROWTH OF 242-S SLURRIES.
77-141	08/15/1977	LIQUID LEVEL IN TANK 103-A DECREASED .9 INCHES.	ASSUME DISSOLUTION OF A FOAM WHICH HAD BEEN OBSERVED DURING LAST SLURRY TRANSFER.
77-144	08/18/1977	RADIATION ACTIVITY IN TANKS 110-TX AND 114-TX DRY WELL.	ASSUME MIGRATION OF SOIL CONTAMINATION.
77-146	08/24/1977	241-SY EXHAUSTER MOISTURE SEPARATOR LEAKED EXTERNALLY, SPREADING CONTAMINATION ONTO CONCRETE PAD.	MECHANICAL FAILURE. APPARENT WELD LEAKS.
77-147	08/24/1977	LIQUID LEVEL IN TANK 101-S DECREASED .7 INCHES.	LEVEL CHANGE IS APPARENT TRANSIENT PHENOMENA ASSOCIATED WITH 242-S EVAPORATOR TRANSFER.
77-148	08/25/1977	LIQUID LEVEL IN TANK 101-TY INCREASED 4.1 INCHES.	ASSUME LEVEL INDICATION CHANGE IS DUE TO LEVEL DEVICE MOVING OVER A DISCARDED FIC TAPE.
77-150	08/30/1977	LIQUID LEVEL IN TANK 105-TX DECREASED 6.75 INCHES.	APPARENT CAUSE OF LEVEL INDICATION CHANGE IS LATERAL MOVEMENT OF THE FIC PLUMMET OVER RAPIDLY CHANGING TERRAIN.
77-151	09/02/1977	LIQUID LEVEL IN TANK 101-B INCREASED 1.15 INCHES.	ASSUME LEVEL INDICATION CHANGE CAUSED BY A RAINWATER ACCUMULATION UNDER LEVEL MEASUREMENT TAPE.
77-152	09/04/1977	LIQUID LEVEL IN TANK 111-S INCREASED 3.1 INCHES.	LEVEL INCREASE CHANGE CAUSED BY REDISTRIBUTION OF LIQUID PRESENT IN THE SALT CAKE AND SLUDGE.
77-155	09/08/1977	EXCEEDED MAXIMUM LEVEL LIMIT IN 002-TXR TANK BY 4.25 INCHES.	PERSONNEL ERROR. TANK OVERFILLED WHEN FLUSHING LINE FROM 155-TX DIVERSION BOX TO 002-TXR TANK.
77-156	09/12/1977	LIQUID LEVEL IN TANK 105-U INCREASED 3.1 INCHES.	ASSUME LEVEL CHANGE DUE TO EXPANSION OF SLURRY MATERIAL IN TANK.
77-158	09/12/1977	EXCEEDED MAXIMUM LEVEL LIMIT IN 002-TXR SUMP.	FLUSH OF LINE BETWEEN TANKS 103-TX AND 102-SY OCCURRED, THE LINE BROKE IN 151-TXR DIVERSION BOX WHICH OVERFILLED THE SUMP.
77-160	09/14/1977	LIQUID LEVEL IN TANK 114-TX EXCEEDED MAXIMUM OPERATING LIMIT.	APPARENT CAUSE OF LEVEL INCREASE IS DUE TO WATER ENTERING THE TANK FROM PRESSURE TESTING A LINE INTO THE TANK.

Table D3.2-2. Summary of Occurrences. (33 sheets)

77-161	09/15/1977	LIQUID LEVEL IN TANK 106-BY INCREASED 1.25 INCHES.	APPARENT CAUSE OF LEVEL INCREASE IS SHIFTING OF THE UNEVEN SALT CRUST.
77-163	09/19/1977	LIQUID LEVEL IN TANK 102-BY INCREASED 1.25 INCHES.	APPARENT CAUSE OF LEVEL INCREASE IS REDISTRIBUTION OF LIQUID AFTER A SALT WELL TRANSFER.
77-168	09/23/1977	LIQUID LEVEL IN TANK 111-U INCREASED 2.1 INCHES.	APPARENT CAUSE OF LEVEL INCREASE ID DRAINAGE FROM U-C AND U-D VALVE PITS AND FLUSH PITS.
77-169	09/23/1977	LIQUID LEVEL IN TANK 115-TX DECREASED 2.25 INCHES.	ASSUME LEVEL CHANGE IS DUE TO SETTLING OF SLUDGE FOLLOWING SALT WELL PUMPING.
77-171	09/29/1977	PUREX SUMP WASTE JETTED TO TANK 104-C INSTEAD OF TANK 102-A.	PERSONNEL AND PROCEDURE ERRORS. PROCEDURE CHANGES HAD NOT BEEN COMPLETED.
77-172	09/29/1977	LIQUID LEVEL IN TANK 201-C INCREASED 2.25 INCHES.	ASSUME LEVEL INCREASE DUE TO NATURALLY OCCURRING PRECIPITATION.
77-174	10/03/1977	LIQUID LEVEL IN TANK 102-U INCREASED 2.05 INCHES.	ASSUME LEVEL INCREASE DUE TO EXPANSION OF SLURRY IN TANK.
77-175	10/04/1977	LIQUID LEVEL IN TANK 101-SY INCREASED 2.05 INCHES.	ASSUME LEVEL INCREASE DUE TO EXPANSION OF SLURRY IN TANK.
77-177	10/10/1977	LIQUID LEVEL IN TANK 202-B DECREASED 1 INCH.	ASSUME LEVEL DECREASE DUE TO SLUDGE SETTLING FOLLOWING PUMPING OF THE TANK.
77-178	10/11/1977	LIQUID LEVEL IN TANK 111-BY DECREASED 1 INCH.	ASSUME LEVEL CHANGE DUE TO TAPE PLUMMET TOUCHING UNEVEN SURFACE CRUST.
77-182	10/12/1977	LIQUID LEVEL IN TANK 105-TX DECREASED 36.75 INCHES.	LEVEL CHANGE DUE TO MOVEMENT OF LEVEL TAPE PLUMMET INTO A HOLE IN THE TANK SURFACE LEFT AFTER SALT WELL PUMPING.
77-184	10/15/1977	LIQUID LEVEL IN TANK 105-SX INCREASED 4.2 INCHES.	ASSUME LEVEL INCREASE DUE TO EXPANSION OF THE SLURRY IN THE TANK.
77-186	10/18/1977	LIQUID LEVEL IN TANK 108-T INCREASED .75 INCHES.	ASSUME LEVEL INCREASE IS DUE TO ACCUMULATION OF MATERIAL ON THE TAPE PLUMMET.
77-188	10/20/1977	LIQUID LEVEL IN TANK 104-SX INCREASED 3.55 INCHES.	ASSUME LEVEL INCREASE IS DUE TO EXPANSION OF THE SLURRY IN THE TANK.
77-189	10/19/1977	RADIOACTIVE ACTIVITY ON 102-SY ANNULUS AIR FILTER.	MECHANICAL FAILURE. FAILURE OF BLANK BETWEEN TANK PUMP PIT AND LEAK DETECTION PIT. FLOW IS THEN THROUGH AN UNDERGROUND LINE.
77-190	10/23/1977	LIQUID LEVEL IN TANK 106-SX INCREASED 3.1 INCHES.	ASSUME LEVEL INCREASE DUE TO RECEIPT OF CONDENSATE FROM OTHER SX TANKS.
77-191	11/02/1977	LIQUID LEVEL IN TANK 102-S INCREASED 7 INCHES.	ASSUME CAUSE OF LEVEL INCREASE IS DUE TO DRAINAGE FROM SA AND SB VALVE PITS.
77-193	11/05/1977	LIQUID LEVEL IN TANK 105-U DECREASED .55 INCHES.	ASSUME DECREASE DUE TO SETTLING OF TANK MATERIAL FOLLOWING TRANSFER.
77-194	11/06/1977	LIQUID LEVEL IN TANK 109-U INCREASED 3.05 INCHES.	ASSUME LEVEL INCREASE DUE TO GROWTH OF CRUST ON TANK SURFACE.
77-196	11/08/1977	RADIATION ACTIVITY IN TANK 105-T DRY WELL INCREASED.	ASSUME ACTIVITY DUE TO REDISTRIBUTION OF TANK 106-T LEAK PLUME.
77-199	11/12/1977	LIQUID LEVEL IN TANK 104-TX DECREASED .9 INCHES.	ASSUME LEVEL DECREASE IS DUE TO MOVEMENT OF A PATCH OF CRUST FROM THE VICINITY OF THE TAPE PLUMMET.
77-200	11/15/1977	DURING PRESSURE TEST OF 001-AR TANK UPPER COIL, CONTAMINATION RELEASED IN A VALVE PIT AND THE PIT THAT RECEIVES ALL COOLING WATER FROM THE AR VAULT.	PROCEDURE ERROR. PROCEDURE INCORRECT TO PREVENT SPREAD OF CONTAMINATION, AND LACK OF WARNINGS IN PROCEDURE FOR PERSONNEL.

Table D3.2-2. Summary of Occurrences. (33 sheets)

77-201	11/18/1977	LIQUID LEVEL IN TANK 112-T DECREASED 1 INCH.	ASSUME LEVEL DECREASE IS DUE TO LEVEL TAPE PLUMMET MOVEMENT OVER AN IRREGULAR SURFACE.
77-202	11/22/1977	RADIATION ACTIVITY IN TANK 104-AX DRY WELL INCREASED.	SEVERAL CAUSES ARE CONSIDERED FOR THIS EVENT. CONTAMINATION FROM PREVIOUS COUPLING LEAK, FROM EXHAUST SYSTEM, FROM NEARBY PROCESS PIPING, OR FROM TANK LEAK.
77-205	12/06/1977	SPRAY LEAK FROM 111-S PUMP PIT DURING LEAK CHECK OF SALT WELL PUMP AND JUMPER.	PROCEDURE ERROR AND MECHANICAL FAILURE. LEAK CHECK SHOULD BE DONE WITH COVER BLOCKS INSTALLED, AND FAILED GASKET AT PUMP INLET FLANGE.
77-206	12/08/1977	LIQUID LEVEL IN TANK 101-S INCREASED 2.35 INCHES.	ASSUME CRYSTAL GROWTH IN THE SLURRY IN THE TANK.
77-207	12/08/1977	LIQUID LEVEL IN TANK 101-SY INCREASED 2.9 INCHES.	ASSUME CRYSTAL GROWTH IN THE SLURRY IN THE TANK.
77-208	12/10/1977	LIQUID LEVEL IN TANK 106-TX DECREASED 2.25 INCHES.	ASSUME LEVEL INDICATION DECREASE DUE TO DEPRESSION IN SURFACE CRUST CAUSED BY MANUAL TAPE PLUMMET.
77-210	12/20/1977	LIQUID LEVEL IN TANK 203-T DECREASED 2.5 INCHES.	ASSUME LEVEL DECREASE IS DUE TO SETTLING OF THE SLUDGE FOLLOWING SALT WELL PUMPING.
77-211	12/23/1977	LIQUID LEVEL IN TANK 101-SX DECREASED 1.1 INCHES.	ASSUME LEVEL DECREASE CAUSED BY DISSOLUTION OF SALT CRYSTALS FOLLOWING WATER ADDITION.
77-212	12/23/1977	LIQUID LEVEL IN TANK 103-TX DECREASED .6 INCHES.	ASSUME LEVEL DECREASE CAUSED BY MOVEMENT OF FOAM OR SLUDGE UNDER THE TAPE PLUMMET.
78-1	01/02/1978	LIQUID LEVEL IN TANK 101-A INCREASED 3.1 INCHES.	ASSUME LEVEL INCREASE DUE TO MATERIAL ON THE TAPE PLUMMET.
78-2	01/02/1978	WASTE MISROUTED FROM 004-AR TO TANK 102-A RATHER THAN TANK 106-A.	PERSONNEL AND PROCEDURE ERRORS. SUPERVISOR SIGNED INCOMPLETE DATA SHEET WITHOUT PROPER REVIEW, AND PROCEDURE LACKS ADEQUATE CHECKS AND APPROVALS.
78-3	01/06/1978	LIQUID LEVEL IN TANK 103-SX DECREASED 1 INCH.	ASSUME LEVEL DECREASE DUE TO FIC MOVING OVER IRREGULAR FISSURED CRUST.
78-4	01/08/1978	LIQUID LEVEL IN TANK 101-S DECREASED .6 INCHES.	UNKNOWN.
78-6	01/10/1978	BACKFLOW OF CONTAMINATION INTO RAW WATER SYSTEM IN 241-TX TANK FARM.	PERSONNEL ERROR/PROCEDURE. CHECK VALVE ON FLUSH PIPING INSTALLED IN THE INVERTED POSITION, MANUAL FLUSH VALVE LEFT PARTIALLY OPEN.
78-13	01/23/1978	UNDETECTED FILLING OF A-40 RETENTION BASIN AT 244-AR VAULT WITH 200,000 GALLONS.	MECHANICAL FAILURES. RADIATION ALARM FAILED CAUSING DIVERTER VALVE TO DIVERT. VALVE STEM WAS BINDING AND THE VALVE DID NOT CLOSE COMPLETELY, INDICATING LIGHT SHOWED VALVE CLOSED.
78-14	01/20/1978	CONTAMINATED LIQUID SPRAYED FROM HOLE DRILLED IN TOP OF TRANSFER LINE V453 WHEN PREPARING TO CUT LINE.	PROCEDURE ERROR. NO CONTAINMENT USED WHEN DRILLING INTO LINE. (SIMILAR TO 76-64)
78-15	01/23/1978	LIQUID LEVEL IN TANK 103-A DECREASED .75 INCHES.	ASSUME LEVEL DECREASE INDICATION DUE TO FIC PLUMMET MOVEMENT OVER IRREGULAR SURFACE.
78-16	01/23/1978	LIQUID LEVEL IN TANK 101-SY INCREASED 3.05 INCHES.	ASSUME LEVEL INCREASE DUE TO EXPANSION OF THE TANK MATERIAL.
78-18	02/09/1978	LIQUID LEVEL IN TANK 111-BY DECREASED 1.25 INCHES.	ASSUME LEVEL DECREASE DUE TO COMPACTION OF THE SURFACE BY THE TAPE PLUMMET, OR TO CONTACT WITH A DISCARDED TAPE LYING ON THE WASTE SURFACE.
78-24	02/23/1978	UNDERGROUND RAW WATER LINE BREAK RELEASED 60,000 GALLONS IN 241-A TANK FARM AND CAUSED CAVE-IN BETWEEN 102-A AND 105-A. HOLE READ 1R/HR DUE TO WATER FLOW THROUGH A BURIED UNUSED DE-ENTRAINER.	MECHANICAL FAILURE. RAW WATER LINE M5a RUPTURE.

Table D3.2-2. Summary of Occurrences. (33 sheets)

78-26	03/02/1978	ELECTRICIAN ENTERED A 15 R/HR RADIATION FIELD IN 244-AR CANYON.	PERSONNEL ERROR. FAILURE OF TEAM IN CANYON TO RECOGNIZE THE RADIATION HAZARD.
78-30	03/22/1978	LIQUID LEVEL IN TANK 106-SX DECREASED .7 INCHES.	ASSUME LEVEL DECREASE DUE TO SLUDGE SETTLING FOLLOWING PUMP OUT.
78-39	04/17/1978	LIQUID LEVEL IN TANK 109-B DECREASED .55 INCHES.	ASSUME LEVEL DECREASE IS DUE TO SLIPPAGE OF THE FIC PLUMMET DOWN SLOPE IN CRUST.
78-44	04/25/1978	RAW WATER LINE LEAK OF 5000 GALLONS BETWEEN 241-S AND 241-SX TANK FARMS.	MECHANICAL FAILURE OF A BELL AND SPIGOT JOINT IN THE RAW WATER LINE.
78-47	05/08/1978	RADIOACTIVE DISCHARGE TO 216-A-8 CRIB EXCEEDED LIMITS.	ASSUME VENT HEADER EXTENSION SEAL LOOP CONDENSATE FOR A, AX, AY, AND AZ FARMS DRAINED INTO LINE.
78-49	05/15/1978	RADIATION ACTIVITY IN TANK 105-A DRY WELL INCREASED.	ASSUME TWO CAUSES: ADDING COOLING WATER TO THIS KNOWN LEAKING TANK, EARLIER RAW WATER SPILL IN 241-A FARM.
78-53	05/23/1978	LIQUID LEVEL IN TANK 103-SX DECREASED .55 INCHES.	ASSUME LEVEL DECREASE DUE TO PLUMMET MOVEMENT OVER IRREGULAR SURFACE.
78-54	05/19/1978	LIQUID LEVEL IN TANK 111-U DECREASED .7 INCHES.	ASSUME LEVEL DECREASE DUE TO FOAM MATERIAL UNDER THE FIC PLUMMET.
78-60	06/09/1978	RADIATION ACTIVITY IN TANK 108-T DRY WELL INCREASED.	ASSUME ACTIVITY INCREASE DUE TO 106-T LEAK PLUME.
78-64	06/21/1978	ROAD GRADER STRUCK TRANSFER LINES HSW-202-M8 AND HSW-203-M8, LINE 202 ENCASEMENT WAS BENT AND PARTIALLY CRUSHED.	PERSONNEL ERROR. RESPONSIBLE PARTY WAS NOT FOLLOWING THE ROAD GRADING WORK, TRANSFER LINES WERE WELL MARKED AND BERMED.
78-69	07/05/1978	HIGH LEVEL WASTE LODGED STUCK IN CAISSON CHUTE WHILE BEING UNLOADED INTO FACILITY.	PROCEDURE ERROR AND DESIGN INADEQUATE. CASK AND CAISSON CHUTE DO NOT MATE PROPERLY AND UNLOADING PROCEDURAL CONTROL INADEQUATE.
78-73	06/12/1978	VACUUM TEST OF FIBERGLASS REINFORCED PLASTIC AND WOOD BOXES RESULTED IN STRUCTURAL FAILURE OF THE BOXES. SUSPECT THAT ALREADY BURIED BOXES ALSO WOULD FAIL.	DESIGN PROBLEMS OF THE BURIAL BOXES.
78-76	07/26/1978	MINOR LEAK IN 4-INCH RAW WATER LINE NEAR 241-TX TANK FARM.	MECHANICAL FAILURE OF A BELL AND SPIGOT JOINT IN LINE.
78-78	07/25/1978	RADIOGRAPHY CREW LEFT THE JOB SITE IN 241-TX FARM DUE TO AN UNDERGROUND TRANSFER IN PROGRESS.	PERSONNEL ERROR. PROBLEMS IN SCHEDULING AND MANAGING PERSONNEL.
78-80	07/27/1978	PROCESS TRANSFER LINE EXPOSED DURING HAND EXCAVATION, OVER-EXPOSURE OF PERSONNEL.	PROCEDURE ERROR. PERSONNEL NOT MADE AWARE OF THE PRESENCE OF THE UNDERGROUND LINE.
78-83	08/10/1978	MISTRANSFER OF WASTE FROM TANK 101-A TO TANK 104-BX INSTEAD OF 102-A.	PERSONNEL ERROR. VALVING CHANGED IN AA VALVE PIT INSTEAD OF AB VALVE PIT DURING TRANSFER.
78-87	08/17/1978	TWO 55-GALLON DRUMS ON 4-C ALPHA PAD APPEAR DISTORTED. DRUMS CONTAIN PLUTONIUM IN SOLUTION.	ASSUME THE CONTAINERS ARE PRESSURIZING AS A RESULT OF CHEMICAL REACTIONS OF THEIR CONTENTS.
78-88	08/22/1978	TRANSFER LINE BETWEEN TANK 107-S AND 105-BX PLUGGED DURING TRANSFER.	PLUGGAGE APPEARS TO BE CAUSED BY SOLIDS SETTLED IN LINE WHEN POWER WAS LOST TO 107-S TRANSFER PUMP.
78-89	08/24/1978	RADIATION ACTIVITY IN DRY WELL BETWEEN TANK 104-U AND 105-U INCREASED.	APPARENT SOURCE OF INCREASED ACTIVITY IS TANK 104-U WHICH IS A LEAKER.
78-90	08/26/1978	FRACTURED 6" SANITARY WATER LINE AND 8" RAW WATER LINE NEAR 275-EA BUILDING. AFFECTED WATER SUPPLY TO 244-AR FACILITY.	APPARENT CAUSE OF BROKEN PIPES WAS FROM HEAVY WEIGHT OF A CRANE UNLOADING PLATES FROM A RAILROAD CAR FOR USE AT 241-AW TANK FARM.

Table D3.2-2. Summary of Occurrences. (33 sheets)

78-98	09/12/1978	PERSONNEL WIPING OFF POLE USED TO RELOCATE JUMPER IN 152-A DIVERSION BOX INGESTED RADIOACTIVE MATERIAL AND SUFFERED SKIN CONTAMINATIONS.	PERSONNEL ERROR. FAILURE TO FOLLOW PROCEDURE OR WEAR APPROPRIATE PROTECTIVE CLOTHING.
78-117	10/30/1978	UNDETECTED FAILURE OF LEAK DETECTORS IN 241-SA AND 241-SB VALVE PITS DURING CROSS-COUNTRY TRANSFER.	MECHANICAL PROBLEM. COMMON DRAIN FOR BOTH VALVE PITS BLOCKED.
78-121	11/15/1978	LIQUID LEVEL IN TANK 106-B DECREASED .6 INCHES.	UNKNOWN.
78-129	12/04/1978	LIQUID LEVEL IN CATCH TANK TX-302-A DECREASED 2.25 INCHES.	UNKNOWN.
78-130	12/02/1978	CONTAMINATED VAPOR VENTING FROM TANK 105-BX AIR INLET RISER AND 104-BX CENTER PIT.	TRANSFER INTO TANK DISPLACED WARM VAPORS OUT THIS TANK'S OPENINGS. TANK IS NOT EXHAUSTED.
79-02	01/02/1979	RAW WATER LEAK OF 37,500 GALLONS LEAKED FROM 241-S/SX SERVICE PIT.	PERSONNEL AND MECHANICAL FAILURES. HOUSING ON PIT WATER METER FAILED, AND PERSONNEL DID NOT VALVE OUT RAW WATER SUPPLY AS REQUIRED.
79-17	02/02/1979	LIQUID LEVEL IN TANK 103-SY DECREASED 2.8 INCHES.	ASSUME LEVEL DECREASE DUE TO COLLAPSE OF SURFACE CRUST.
79-20	02/07/1979	LIQUID LEVEL IN TANK 110-U INCREASED .2 INCHES.	LEVEL INCREASE ATTRIBUTED TO WATER INTRUSION THROUGH PUMP PIT.
79-22	02/08/1979	RADIATION ACTIVITY IN DRY WELL NEAR TANKS 103-TX AND 107-TX INCREASED.	APPARENT MIGRATION OF CONTAMINATION IN SOIL.
79-25	02/12/1979	IMPROPER VALVE LINE-UP DURING WASTE TRANSFER OR SUBSEQUENT FLUSHING CONTAMINATED RAW WATER HOSE BIB IN 241-S FLUSH PIT.	PERSONNEL ERROR. IMPROPER VALVING IN FLUSH PIT OR VALVE PIT.
79-26	02/17/1979	MISROUTING OF TRANSFER FROM TANK 102-S TO TANK 103-SX INSTEAD OF TANK 106-SX.	PERSONNEL ERROR. IMPROPER VALVING IN 241-SX-A VALVE PIT.
79-29	01/31/1979	CONTAMINATED VAPOR VENTED FROM TANK 118-TX #1 RISER WHICH CONTAINS THE LIQUID LEVEL REEL.	UNKNOWN CAUSE AT TIME OF REPORT.
79-31	03/21/1979	LIQUID LEVEL IN TANK 110-TX DECREASED 2.5 INCHES.	UNKNOWN.
79-34	03/22/1979	CONTAMINATED VAPOR VENTED FROM TANK 106-U RISER #9, WHICH CONTAINS THE LIQUID LEVEL REEL.	NOT REPORTED.
79-35	03/22/1979	CORE DRILL STRING CONTACT WITH BOTTOM OF TANK 107-BX, WHICH BROKE THE DRILL ROD.	PROCEDURE ERROR. INADEQUATE ADMINISTRATIVE CONTROL OF DOCUMENTATION OF DRILL ROD SEGMENTS.
79-37	03/28/1979	RADIATION ACTIVITY IN TANK 107-BY DRY WELL INCREASED.	UNKNOWN.
79-38	03/28/1979	LIQUID LEVEL IN TANK 102-S EXCEEDED LIMIT.	PERSONNEL ERROR. INATTENTION BY CASS OPERATORS TO LEVEL ALARMS.
79-39	03/29/1979	LIQUID LEVEL IN 103-AX LEAK DETECTION PIT INCREASED.	ASSUME SNOW MELT INTRUSION THROUGH DRAIN BELLOWS ASSEMBLY.
79-60	05/23/1979	CONTAMINATED SWALLOW NESTS FOUND AT 244-AR VAULT.	BIRDS PICKED UP CONTAMINATED MUD FROM 216-A-40 RETENTION BASIN. BLADDER TYPE BAGS AT RETENTION BASIN HAVE LEAKS.
79-61	05/25/1979	SLURRY LINE SL-113 LEAKED IN 241-S FARM WHEN BEING READIED FOR A PRESSURE TEST.	MECHANICAL FAILURE OF 2-INCH CARBON STEEL LINE.
79-65	06/06/1979	WASTE TANK SURVEILLANCE SIGNALS LOST WHEN LINES CUT BY BACKHOE NEAR 241-B AND BX TANK FARMS.	PERSONNEL ERROR. PROCEDURE INDICATED HAND DIGGING IN THIS AREA INSTEAD OF BACKHOE USE.
79-68	07/11/1979	LIQUID LEVEL IN TANK 001-TXR DECREASED 1.25 INCHES.	UNKNOWN. TANK INTEGRITY IS QUESTIONABLE.
79-70	07/13/1979	LIQUID LEVEL IN 011-BXR VAULT TANK DECREASED 1.25 INCHES. ALSO TANK CELL HAS STRUCTURAL ANOMALIES.	LEVEL DECREASE CAUSE UNKNOWN. CELL STRUCTURAL ANOMALIES DUE TO PREVIOUS CELL OVERFILLING.

Table D3.2-2. Summary of Occurrences. (33 sheets)

79-73	07/23/1979	RAW WATER LEAK IN 241-C TANK FARM RESULTED IN LARGE PUDDLE WHICH PARTIALLY COVERED TANKS 111-C AND 112-C.	MECHANICAL FAILURE OF "STOP AND WASTE" VALVE SUPPLYING 241-C FARM.
79-75	06/09/1978	RADIATION ACTIVITY IN TANK 108-T DRY WELL INCREASED.	ASSUME INCREASED ACTIVITY DUE TO MIGRATION OF TANK 106-T LEAK PLUME.
79-80	08/17/1979	MISROUTING OF 13,000 GALLONS OF CROSS-COUNTRY LINE LEAK CHECK WATER TO TANK 103-S.	PERSONNEL ERROR. FAILURE TO REALIGN VALVE IN 241-SA VALVE PIT.
79-81	08/20/1979	BOXES IN BURIAL GROUND 3A-TRENCH 17 EXCEEDED CRITICALITY LIMITS.	PERSONNEL ERROR. IT APPEARS THAT THREE BOXES WERE PUT IN THE BURIAL TRENCH WITHOUT PROPER SPACING.
79-100	10/10/1979	LIQUID LEVEL IN TANK 102-S EXCEEDED LIMIT.	PERSONNEL ERROR. FAILURE TO MAINTAIN CONTROL WHILE 242-S EVAPORATOR STEAM TURBINE PRESSURE REGULATING VALVE WAS CYCLED.
79-104	10/21/1979	WASTE TRANSFER FROM TANK 106-SX TO 101-SX MISROUTED TO TANK 102-S.	PERSONNEL ERROR. VALVE ALIGNMENT IN 241-SA VALVE PIT FOR OTHER TRANSFER REROUTED THIS TRANSFER.
79-113	10/10/1979	INADVERTENT FLOW ROUTING TO INACTIVE CRIB 216-A-24.	PERSONNEL ERROR. TWO SETS OF ROUTING VALVES WERE MISALIGNED.
79-118	11/29/1979	LIQUID LEVEL IN TANK 103-A DECREASED 4 INCHES.	ASSUME LEVEL DECREASE DUE TO SLUMPING OF THE TANK SURFACE.
79-125	12/15/1979	LIQUID LEVEL IN TANK 105-SX DECREASED 2.3 INCHES.	ASSUME LEVEL DECREASE DUE TO PLUMMET/TANK MATERIAL INTERACTION.
79-126	12/18/1979	25-TON CRANE BOOM POSITIONED OVER WORKERS ON TOP OF 241-SA VALVE PIT AND TESTED, VIOLATING SAFE OPERATING PRACTICES.	PERSONNEL ERROR. WILLFUL VIOLATION OF CRANE OPERATION PROCEDURES.
80-4	01/13/1980	LIQUID LEVEL IN TANK 110-BX INCREASED 2.5 INCHES.	SNOW MELT CHANNELED INTO PUMP PIT AND DIRECTLY INTO TANK.
80-5	01/15/1980	LIQUID LEVEL IN TANK 108-BY INCREASED 3 INCHES.	RAPID SNOW MELT RAN INTO PUMP PIT THROUGH THE PIT DRAIN DIRECTLY INTO TANK.
80-6	01/15/1980	LIQUID LEVEL IN TANK 103-BY INCREASED 1.25 INCHES.	RAPID SNOW MELT RAN INTO PUMP PIT THROUGH THE PIT DRAIN DIRECTLY INTO TANK.
80-7	01/17/1980	LIQUID LEVEL IN TANK 103-SX DECREASED 1.1 INCHES.	ASSUME LEVEL DECREASE DUE TO FIC PLUMMET MEASURING IRREGULAR SURFACE.
80-8	01/18/1980	MISROUTED 2000 GALLONS INTO TANK 102-AY FROM TANK 103-A INSTEAD OF INTO TANK 101-AY.	PERSONNEL ERROR. MISVALVING THE SLURRY DISTRIBUTOR VALVE IN TANK 102-AY 02A VALVE PIT.
80-9	01/16/1980	CROSS-COUNTRY TRANSFER LINE FROM TANK 107-S TO 105-BX PLUGGED DURING TRANSFER OF TERMINAL LIQUOR SOLUTION.	PLUG DUE TO INADEQUATE DILUTION OF WASTE, DILUTION WATER METER FAILED.
80-25	02/20/1980	UNUSUAL LIQUID LEVEL DECREASE IN TANK 103-SX FOLLOWING TRANSFER IN.	LEVEL DECREASE CAUSED BY MIXING LARGE AMOUNT OF LOW DENSITY LIQUID INTO TANK OF SOLIDS.
80-26	02/21/1980	LINE LEAK IN SLURRY LINE SL 126 BETWEEN 241-SD VALVE PIT AND TANK 107-S CROSS-SITE PUMP PIT.	ASSUME LINE LEAKS DUE TO UNANTICIPATED CORROSION.
80-32	03/05/1980	CASS TRANSMISSION CABLE FROM 241-A TANK FARM CRUSHED DURING REMOVAL OF A FLUME IN 241-AZ TANK FARM. NOTIFICATION TO TANK FARM OPERATIONS WAS NOT INITIATED IMMEDIATELY AS REQUIRED.	PERSONNEL ERRORS. DAMAGE DURING CONSTRUCTION ACTIVITIES.
80-36	03/14/1980	CRITICALITY PREVENTION SPECIFICATION VIOLATIONS IN ALPHA-1 CAISSON OCCURRED BETWEEN 1970 AND 1973.	PROCEDURE ERRORS.
80-37	04/03/1980	HIGH VACUUM (-4.0"W.G. FOR 3 1/2 DAYS WHEN SUPPLY FAN WAS OFF, COULD HAVE BEEN AS HIGH AS -6.25" W.G.) IN TANK 102-AY ANNULUS.	PERSONNEL AND DESIGN PROBLEMS. UNEXPECTED SHUTDOWN OF ANNULUS SUPPLY FAN COUPLED WITH THE LACK OF PRESSURE SWITCH TO SHUT DOWN EXHAUST FAN.

Table D3.2-2. Summary of Occurrences. (33 sheets)

80-50	05/16/1980	PARTIAL MISTRANSFER OF 4125 GALLONS INTO TANK 101-AY FROM TANK 103-A. TRANSFER WAS TO GO TO TANK 102-AY.	MECHANICAL FAILURE. 3-WAY SDV VALVE IN 241-AY-02A VALVE PIT SPLIT FLOW BETWEEN TWO TANKS. BALL VALVE ORIENTATION WITHIN VALVE BODY DID NOT CORRESPOND TO PAINTED FLOW DIAGRAM ON PROCESS PIT COVER BLOCK
80-51	05/31/1980	4120 GALLONS MISROUTED TO TANKS 101-AY AND 102-AY FROM 244-A CATCH TANK. INTENDED RECEIVER TANK WAS 102-A.	PERSONNEL ERROR. INSTALLED JUMPER WAS MISALIGNED IN 241-A-02C PIT.
80-53	06/07/1980	LIQUID LEVEL IN TANK 201-T INCREASED 2.25 INCHES.	ASSUME LEVEL INCREASE INDICATION DUE TO SOLIDS MOVEMENT IN VICINITY OF PLUMMET.
80-58	05/12/1980	LIQUID LEVEL MEASUREMENT TAPE IN TANK 107-BY CUT AND REMOVED WITHOUT PERMISSION.	PERSONNEL ERROR. CONSTRUCTION EMPLOYEE REMOVED TAPE AND GAUGE WITHOUT PERMISSION.
80-60	05/08/1980	PHOTOGRAPHIC SURVEY OF TX-302-C CATCH TANK REVEALED LIQUID LEVEL ABOVE MAXIMUM LIMIT.	MANUAL TAPE READINGS INDICATED LEVEL WITHIN LIMITS. TANK RISER EXTENDED 3' PREVIOUSLY AND NO REFERENCE TO ELEVATION CHANGE MADE TO DRAWINGS.
80-64	07/11/1980	LIQUID LEVEL IN TANK 112-TX INCREASED 1.75 INCHES.	LEVEL INCREASE DUE TO INTRUSION FROM A STEAM LINE LOCATED IN AN ASSOCIATED VALVE PIT.
80-66	07/21/1980	PLUGGED DEENTRAINER MINIMIZED FLOW THROUGH 241-SY EXHAUSTER, CAUSING 102-SY ANNULUS EXHAUST SYSTEM TO PULL CONTAMINATED AIR THROUGH AIR SAMPLER FILTER.	PERSONNEL ERROR. DEENTRAINER dP INSTRUMENT INSTALLED BACKWARDS, GIVING FALSE INDICATION OF GOOD OPERATION.
80-73	07/10/1980	MISROUTED 2200 GALLONS TO TANK 103-TX FROM 118-TX, INTENDED RECEIVER TANK WAS 106-SX.	PERSONNEL ERROR. FAILURE TO CLOSE VALVE IN 241-152-TXR DIVERSION BOX.
80-80	07/23/1980	WHILE TRANSPORTING A SALT WELL PUMP FOR BURIAL THE PLASTIC COVERING THE PUMP WAS PUNCTURED AND TWO GALLONS OF RADIOACTIVE LIQUID SPILLED ON THE GROUND.	PERSONNEL ERROR. IMPROPER RIGGING OF PUMP FOR BURIAL.
80-81	08/26/1980	SPRAY LEAK IN 241-AW-05A CENTRAL PUMP PIT DURING SLURRY TRANSFER TO TANK 105-AW.	PERSONNEL AND DESIGN ERROR. WORKER UNABLE TO TIGHTEN CONNECTION BETWEEN JUMPER AND DISTRIBUTOR SUFFICIENTLY.
80-82	09/04/1980	LIQUID LEVEL IN TANK 103-A DECREASED 3.3 INCHES.	ASSUME LEVEL DECREASE IS DUE TO MIXING OF DISSIMILAR SOLIDS WITHIN THE TANK.
80-84	09/08/1980	WORKER EXCEEDED WEEKLY EXPOSURE WHILE WORKING IN A TRENCH IN 241-SY FARM DURING WASTE TRANSFER.	PROCEDURE ERROR. TRANSFER NOT COMMUNICATED TO CONSTRUCTION WORKERS.
80-87	10/02/1980	5775 GALLONS MISTRANSFERRED INTO TANK 103-AX FROM TANK 101-AX. INTENDED RECEIVER TANK WAS 103-AW.	PERSONNEL ERROR. VALVE MISPOSITIONED IN AX-A VALVE PIT.
80-88	10/17/1980	9625 GALLONS MISTRANSFERRED TO TANK 102-AY FROM 101-A. INTENDED RECEIVER TANK WAS 102-A.	PERSONNEL ERROR. CORRECT TRANSFER ROUTE NOT SET UP.
80-90	11/11/1980	SLURRY LINE SL 176 LEAKED DURING TRANSFER FROM 242-S EVAPORATOR TO TANK 103-SY.	MECHANICAL FAILURE. ASSUME CORROSION OF CARBON STEEL TRANSFER LINE.
81-02	11/19/1980	LIQUID LEVEL IN TANK 106-SX INCREASED 3 INCHES.	MECHANICAL FAILURE. INTRUSION FROM A LEAKING STEAM COIL AND FAILURE OF A VALVE TO THE STEAM COIL.
81-03	01/13/1981	RADIATION ACTIVITY IN TANK 101-A DRY WELL INCREASED.	ACTIVITY INCREASE DUE TO LEACHING DOWN OF A PREVIOUS SOIL CONTAMINATION AROUND 241-A-01B PIT.
81-04	01/14/1981	LIQUID LEVEL IN TANK 110-BX INCREASED 1.25 INCHES.	LIQUID LEVEL INCREASE DUE TO INTRUSION OF RAINWATER.
81-24	03/02/1981	20-40 GALLONS/DAY LEAK IN 4" RAW WATER LINE FEEDING 244-UR PROCESS VAULT.	MECHANICAL FAILURE. RAW WATER LINE DEVELOPED LEAKS AND CLOSED DISCHARGE LINE VALVES LEAKED THROUGH.
81-25	03/30/1981	LIQUID LEVEL IN TANK 103-T EXCEEDED LIMIT.	ASSUME LEVEL INCREASE DUE TO PRECIPITATION ENTERING TANK VIA PUMP PITS.

Table D3.2-2. Summary of Occurrences. (33 sheets)

81-36	05/20/1981	LIQUID LEVEL IN TANK 103-TY EXCEEDED LIMIT BY 5.1 INCHES.	LEVEL INCREASE CAUSED BY WATER INTRUSION VIA AN OPEN WATER LINE IN 103-TY WATER FLUSH PIT. WATER RAN INTO PIT AND INTO THE TANK VIA THE PIT DRAIN.
81-48	07/10/1981	FIC BOX NEAR 118-TX VALVE PIT DAMAGED BY CRANE BACKING UP.	APPARENT ACCIDENT CAUSED BY ERROR IN JUDGMENT BY FLAGMAN, CONGESTION IN TANK FARM, AND EXTREMELY ROUGH TERRAIN.
81-52	08/17/1981	WASTE TRANSFER FROM 101-AY TO 104-AW MISROUTED TO 102-AY.	MECHANICAL FAILURE. MISROUTING CAUSED BY FAILURE OF 3-WAY DISCHARGE VALVE IN TK-AY-102-02D TO BE POSITIONED AGAINST MECHANICAL STOP.
81-55	09/03/1981	CONTAMINATION RELEASE IN 204-S UNLOADING STATION WHILE HOOKING UP RAILROAD CAR FOR UNLOADING.	MECHANICAL FAILURE. FAULTY SPRAY RING VALVE ON TOP OF CAR.
81-58	09/15/1981	FIRE IN 241-AN TANK FARM K1-2-1 CABINET ELECTRIC BLAST HEATER POWER COMPONENTS.	PERSONNEL ERROR AND MECHANICAL FAILURE. CURRENT ALARM SWITCH SHORTED OUT, SWITCH WAS REDUNDANT AND SHOULD HAVE BEEN REMOVED DURING CONSTRUCTION.
81-61	09/08/1981	RADIOACTIVE FLUSH WATER PUMPED TO TANK 102-SY THROUGH TRANSFER LINE THAT GOES THROUGH S-FARM WHERE WORKERS WERE EXCAVATING.	PERSONNEL ERROR. COMMUNICATION FAILURE, AND FAILURE TO FOLLOW LOCK AND TAG PROCEDURE.
81-82	12/07/1981	LIQUID LEVEL IN 011-BXR TANK DECREASED 2.5 INCHES.	MECHANICAL FAILURE. LEVEL DECREASED WHEN TANK WALL BUCKLED WHICH CAUSED LEAKS.
82-01	01/06/1982	RADIATION ACTIVITY IN TANK 109-C DRY WELL INCREASED.	ASSUME ACTIVITY INCREASE IS CAUSED BY MIGRATION OF SOIL CONTAMINATION.
82-02	01/05/1982	FAILURE OF PROCESS LINE V-402 DURING TX-FARM SALT WELL PUMPING.	MECHANICAL FAILURE. LINE FAILURE CONFIRMED BY PRESSURE TEST.
82-12	03/24/1982	LOSS OF EMERGENCY POWER TO 204-AR UNLOADING STATION AND 242-A EVAPORATOR.	MECHANICAL FAILURE. APPARENT LOSS OF BACK-UP POWER DUE TO DIRT IN RELAY CONTACTS, FAILURE OF MANUAL/AUTOMATIC SWITCH, AND FAILURE IN AUTOMATIC START CONTROL CIRCUIT MODULE.
82-21	05/15/1982	FAILURE OF PROCESS LINE BETWEEN 241-TX-155 AND 241-U-151, V-398.	MECHANICAL FAILURE OF INNER PROCESS LINE.
83-1	01/22/1983	FAILURE OF PUREX 36" CHEMICAL SEWER LINE DISCOVERED BY CRANE TIRE CAUSING CAVE-IN IN 241-AP TANK FARM.	MECHANICAL FAILURE. BELLS OF VITRIFIED CLAY PIPE WERE BROKEN AND LEAKING.
83-07	04/11/1983	WASTE TRANSFER INTO AY TANK WITHOUT VENTILATION ON RECEIVER TANK. NORMAL VENTILATION SYSTEM WAS OUT-OF-SERVICE, PORTABLE EXHAUSTER STARTED, BUT OPERATOR FAILED TO OPEN THE EXHAUSTER INLET VALVE.	PERSONNEL ERROR, FAILURE TO FOLLOW PROCEDURE. OPERATOR OPENED VALVE ONE QUARTER TURN INSTEAD OF 15 1/2 TURNS.
83-09	03/25/1983	WHILE CORE DRILLING IN 241-AX-152 DIVERTER STATION A 2" ENCASEMENT DRAIN LINE WAS HIT AND BREACHED.	DESIGN PROBLEM. ENCASEMENT DRAIN LINE WAS NOT ON CONSTRUCTION DRAWINGS OR DRILL PERMIT.
83-11	03/19/1983	LIQUID LEVEL IN TANK 201-T INCREASED 2.25 INCHES.	UNKNOWN.
83-16	07/11/1983	TANK 102-T LIQUID LEVEL INCREASE. TANK INTERIM STABILIZED, ASSUMED INTRUSION OF RAIN/SNOW MELT.	WEATHER. RAIN/SNOW MELT INTRUSION INTO TANK. 241-TR-153 BOOSTER PUMP PIT DRAINED WAS SEALED, LEVEL INCREASE HAS STOPPED.
83-22	11/16/1983	INCREASE IN ACTIVITY IN DRYWELL ADJACENT TO TANK 107-TX. APPARENT RAINFALL INTRUSION INTO INACTIVE, QUESTIONABLE INTEGRITY TANK CAUSED INCREASED ACTIVITY IN ASSOCIATED DRYWELL.	MECHANICAL/WEATHER. TANK INTEGRITY QUESTIONABLE, RAINFALL INTRUSION THROUGH COVERBLOCKS ASSUMED. TANK 107-TX PUMPED.

Table D3.2-2. Summary of Occurrences. (33 sheets)

83-28	11/07/1983	STEAM RELEASE FROM 107-AN PUMP PIT. AN FARM VENT FAN SHUT DOWN DURING WASTE TRANSFER TO TANK 107-AN. TANK VACUUM LOST, STEAM ESCAPED FROM 107-AN PUMP PITS.	MECHANICAL. STACK SAMPLER MALFUNCTION CAUSED INTERLOCK TO SHUTDOWN VENT FAN, PRIOR TO TRANSFER BEING STOPPED.
83-31	11/16/1983	TANKS 102,101,104 AND 106-AW PRESSURIZED WHEN HOT WATER (123oF) DUMPED INTO TANK 102-AW FROM 242-A EVAPORATOR.	RAPID EXPANSION OF TANK VAPORS OVERWHELMED THE EXHAUST AIR FLOW.
83-33	11/06/1983	MULTIPLE PRESSURIZATIONS OF TANK 103-AW WHEN RECEIVING PUREX E-5 WASTE.	PRESSURIZATION DUE TO VAPORIZATION OF THE THERMALLY HOT WASTE AS IT IS DUMPED INTO A COOLER TANK.
83-34	12/12/1983	SMEARABLE CONTAMINATION IN 200-EAST ARE CLEAN OUT BOXES (COBs).	ASSUME DETERIORATION OF PLUG SEALS ON THE CENTER RISER OF THE COBs.
84-02	01/08/1984	50-70' BREACH IN B-POND DIKE BETWEEN EAST AND WEST EXPANSION PONDS.	APPARENT CAUSE OF DIKE BREACH IS EROSION UNDER THE FABRIFORM LINER OF THE SPILLWAY.
84-06	10/27/1983	RELEASE OF RADIOACTIVE EFFLUENT TO THE 216-A-8 CRIB IN EXCESS OF CONCENTRATION GUIDELINES.	APPARENT SOURCE OF CONTAMINATION WAS A DEACTIVATED 16" WASTE COOLING WATER LINE THAT ENTERS THE A-08 SAMPLE PIT.
84-17	04/13/1984	FAILURE OF THERMOCOUPLES NEAR AIR LIFT CIRCULATORS IN AGING WASTE TANK 101-AZ.	MECHANICAL FAILURE OF UNKNOWN TYPE.
84-19	03/21/1984	FIRE IN FUEL DELIVERY TRUCK IN 200-WEST AREA.	PINHOLE LEAK IN POWER STEERING LINE CAUSED FLUID TO SPRAY ONTO THE MANIFOLD OF THE TRUCK. FLUID FLASHPOINT IS 375 °F, MANIFOLD TEMPERATURE WAS 800-900 °F.
84-21	03/28/1984	2800 GALLONS OF PUREX WASTE ROUTED TO TANK 102-AZ INSTEAD OF TANK 101-AZ.	PERSONNEL ERROR. DIVERTER VALVE IN 152-AX DIVERTER STATION NOT RETURNED TO NORMAL POSITION AFTER TRANSFER TO NEARBY WASTE TANK.
84-27	04/30/1984	SAMPLE OF GABLE MOUNTAIN POND FOUND HIGH LEVELS OF STRONTIUM 90 EXCEEDING LIMITS.	HIGH STRONTIUM LEVELS DUE TO ACCIDENTAL RELEASE IN 1964.
84-34	05/31/1984	LIQUID LEVEL IN TANK 203-C DECREASED 2 INCHES.	CAUSE OF TANK LEVEL DECREASE NOT REPORTED.
84-71	11/19/1984	TRANSFER LINE BETWEEN B-PLANT AND 244-A LIFT STATION (SN-233) LEAKED TO ENCASEMENT.	MECHANICAL FAILURE OF TRANSFER LINE.
84-81	12/18/1984	BACKUP EXHAUSTER FOR 241-AY AND AZ FARMS FAILED AFTER STARTING. AGING WASTE FARM TANKS WERE WITHOUT VENTILATION FOR 20 MINUTES.	MECHANICAL FAILURE. EXHAUSTER CIRCUIT BREAKER TRIPPED AT FAN START.
85-34	04/12/1985	UNNEUTRALIZED TANK F-18 (PUREX) TRANSFER RESULTED IN PIPE DAMAGE IN LINE BETWEEN 241-AW-A VALVE PIT AND 241-101-AW DISTRIBUTOR.	PERSONNEL ERROR.FAILURE TO NEUTRALIZE BATCH PRIOR TO TRANSFER.
85-48	05/23/1985	TRANSFER BETWEEN PUREX AND 101-AZ TANK RESULTED IN EXPOSURE TO PERSONNEL IN EXCAVATION NEAR 241-AY FARM.	PERSONNEL ERROR. FAILURE TO COMMUNICATE A DELAY IN TRANSFER TIME TO PERSONNEL IN EXCAVATION.
85-55	06/26/1985	FLASH FIRE IN 153-AX DIVERSION BOX.	FIRE CAUSED BY ACTUATING AN ELECTRIC TOOL IN DIVERSION BOX AFTER USING A CONTAMINATION SEALANT IN THE DIVERSION BOX FOLLOWED BY A METHYL ALCOHOL FLUSH.
85-98	12/18/1985	FAILURE TO REPLACE BREATHER FILTERS WHEN REQUIRED BY SAR FOR WASTE TANKS 102-BX, 103-C, AND 108-C.	PERSONNEL ERRORS. FILTERS NOT REPLACED IN TIME DUE TO MANPOWER PROBLEMS.
86-45	08/06/1986	FOUR OPERATIONAL SAFETY REQUIREMENTS NOT COMPLETED AS REQUIRED. PREVENTATIVE MAINTENANCE ACTIVITIES WERE NOT CARRIED OUT AS REQUIRED.	ADMINISTRATIVE. TANK FARM PROD CONTROL DID NOT SCHEDULE THE PMs. COVERED 241-A-702 AIR MONITOR, 241-AR-151 LEAK DETECTOR, AY & AZ LEAK DETECTOR, AREA EFFLUENT IN-LINE RADIATION MONITOR
RHO-UOR-87-04	03/13/1987	ALL OPERATIONAL SAFETY REQUIREMENTS REVIEWED, FOUND THAT FOR 9 OF THEM, POSITIVE COMPLIANCE COULD NOT BE VERIFIED.	ADMINISTRATIVE. SAFETY ANALYSIS REPORTS HAD TO BE CHANGED TO REFLECT THE REAL SITUATION.

Table D3.2-2. Summary of Occurrences. (33 sheets)

87-05	03/30/1987	I-129 EMISSIONS FROM 241-AW FARM PRIMARY EXHAUSTER EXCEEDED OPERATIONS ADMINISTRATIVE CONTROL VALUE	OPERATIONAL. PUREX FLUSHED A SILVER REACTOR TO THE AW FARM IN JUNE, 1986. I-129 LEVELS WENT UP TO 4 TIMES THE LIMIT. LEVELS STARTED DECREASING IN JULY, BACK TO NORMAL IN DECEMBER.
WHC-UO-87-010-PUREX-01	08/30/1987	PUREX CLADDING REMOVAL IN PROGRESS, DISCHARGE MADE TO 216-A-36B CRIB. PUREX STACKS, CRIB, AND AW TANK FARM EXHAUST EXCEEDED LIMITS OF (AMMONIUM HYDROXIDE) NH4OH AND AMMONIA (NH3).	PROCEDURE/PERSONNEL ERROR. AMMONIA CONTAINING DISCHARGE SHOULD HAVE BEEN TO A WASTE TANK INSTEAD OF CRIB. INSUFFICIENT ATTENTION TO ENVIRONMENTAL DISCHARGE LIMITS.
WHC-UO-88-028-TF-03	07/13/1988	241-SX-104 EXCEEDED THE LEVEL DECREASE CRITERIA OF 0.3 FOOT DECREASE.	MECHANICAL. TANK ASSUMED TO LEAK. INITIATED STABILIZATION AND ISOLATION ACTIVITIES.
WHC-UO-88-029-TF-04	07/26/1988	241-AX-102 EXCEEDED THE 1.00 INCH DECREASE CRITERIA.	MECHANICAL. TANK ASSUMED TO LEAK. PUMPED TANK OUT IN AUGUST, 1988.
WHC-UO-88-034-TF-05	10/11/1988	241-C-103 SHOWS DECREASING LEVEL TREND OF 0.5" SINCE DECEMBER, 1984. NO LIMITS EXCEEDED.	MECHANICAL. NO LIMITS EXCEEDED. TANK WILL BE STABILIZED ON SCHEDULE.
WHC-UO-89-03-TF-01	01/09/1989	OPERATING AGING WASTE FACILITY USING DOE UNAPPROVED SAFETY ANALYSIS REPORT (2 YEARS). REPORT WAS APPROVED BY CONTRACTOR AND "OFFICIALLY RELEASED". DOE HAD NOT APPROVED THE SAR REVISION.	ADMINISTRATIVE. SAR APPROVAL PROCESS BREAKDOWN.
WHC-UO-89-04-TF-02	01/06/1989	SURVEILLANCE NON-CONFORMANCE, FAILURE TO TAKE TEMPERATURE READINGS EVERY 45 DAYS ON HIGH-HEAT TANKS (101, 102, 103, 104, 105, AND 106-SX)	ADMINISTRATIVE/PERSONNEL ERROR. NO ADMINISTRATIVE PROCEDURE TO ENSURE ALL OSRs AND STATUS OF MONITORING. DATA TAKING REQUIREMENTS NOT FOLLOWED.
WHC-UO-89-009-TF-03	01/31/1989	LEVEL DECREASE IN 241-A-102. EXCEEDED THE 1.00 INCH LEVEL DECREASE CRITERIA.	MECHANICAL. TANK ASSUMED LEAKER. EXPEDITED PUMPING OF TANK.
WHC-UO-89-014-TF-04	03/07/1989	SURFACE LEVEL MEASUREMENT DECREASE IN 241-A-302-B CATCH TANK. LEVEL READINGS HAVE SHOWN WIDE FLUCTUATIONS.	MECHANICAL. MEASURING DEVICE SHORTING OUT. TANK INTERIM STABILIZED.
WHC-UO-89-023-TF-05	05/18/1989	LEVEL DECREASE IN 241-AX-102. LEVEL CONTINUED TO DECREASE AFTER TANK PUMP DOWN. EXCEEDED 1.00" LEVEL DECREASE CRITERIA.	LEVEL DECREASE ATTRIBUTED TO TANK CONTENTS SETTLING.
WHC-UO-89-030-SAHP-01	05/24/1989	RAILROAD WASTE TANK CAR SHIPPED FROM 340 FACILITY IN 300-AREA TO 204-AR FACILITY WITH SMEARABLE CONTAMINATION IN EXCESS OF LIMITS.	PERSONNEL ERROR. FAILURE TO COMMUNICATE THE REQUIREMENTS OF DEPT. OF TRANSPORTATION IN SAFETY ANALYSIS REPORT FOR PACKAGING (SARP) AND THE HEALTH PHYSICS PROCEDURE.
WHC-UO-89-043-TF-06	09/05/1989	TANK FARM AMMONIA RELEASES EXCEEDING CERCLA LIMITS.	TRAINING. THE REQUIREMENTS CHANGED FOR AMMONIA RELEASES, PLANT OPERATING AND ENGINEERING STAFF WERE NOT AWARE OF THE SIGNIFICANCE OF THESE CHANGES, PROCEDURES TO BE CHANGED.
WHC-UO-89-044-TF-07	08/16/1989	241-C TANK FARM VAPOR RELEASE INHALED BY EMPLOYEE.	OPERATION OF TANK FARM. SUSPECT AMMONIA SMELL FROM TANK 241-C-102 THROUGH BREATHER FILTER. INSTALLED ACTIVATED CARBON SYSTEM TO FILTERS.
WHC-UO-89-059-TF-08	11/28/1989	AUTOMATIC TRANSFER OF ELECTRIC POWER FAILED TO TRANSFER TO DIESEL GENERATED POWER ON LOSS OF NORMAL POWER TO 242-A EVAPORATOR.	MECHANICAL. MALFUNCTION OF AUTOMATIC EMERGENCY TRANSFER SWITCH.
WHC-UO-89-062-SSS-01	12/22/1989	ERROR FOUND IN COMPUTER CODE GENII USED TO CALCULATE ENVIRONMENTAL IMPACTS OF EMISSIONS ON HANFORD SITE.	PERSONNEL, PROCEDURE ERROR. WIND DIRECTIONS USED IN MODELLING ARE OFF BY 180 DEGREES.
WHC-UO-89-065-TF-09	12/25/1989	PORTABLE POWER TRANSFORMER FAILED WHILE NORMAL POWER OUT OF SERVICE FOR SCHEDULED MAINTENANCE, 200-EAST TANK FARMS.	MECHANICAL. PORTABLE TRANSFORMER FAILED DUE TO A BURNT CABLE.

Table D3.2-2. Summary of Occurrences. (33 sheets)

RL-WHC-TANKFARM-1990-0014	09/04/1990	RELEASE OF RADIONUCLIDE MATERIAL FROM TANK 105-A PORTABLE EXHAUSTER SEAL POT AND ONTO SOIL. APPROX 3 SQUARE FEET OF THE SOIL SURFACE WAS CONTAMINATED.	ADMINISTRATIVE/MECHANICAL. FAULTY SEAL POT DISCOVERED APRIL, 1990, FAULTY SEAL POT NOT REPLACED, FAILED IN SEPTEMBER, 1990
RL-WHC-TANKFARM-1990-0056	09/16/1990	RELEASE OF RADIONUCLIDE MATERIAL FROM TANK 105-A PORTABLE EXHAUSTER FILTER HOUSING ONTO SOIL. TWO SPOTS WERE CONTAMINATED, 8000 D/M IN 1 FT IN DIAMETER AREA, 600 D/M IN AN 8 INCH IN DIAMETER AREA	ADMINISTRATIVE. LOCK AND TAG PROCEDURE FOR MAINTENANCE DID NOT LOCK OUT THE DRAIN VALVES DURING MAINTENANCE.
RL-WHC-TANKFARM-1990-0082	09/26/1990	OSR NON-CONFORMANCE ON ADMINISTRATIVE CONTROLS FOR UNDERGROUND STORAGE TANK 241-U-103. MAINTENANCE FAILED TO USE SPARK RESISTANT TOOLS DURING BREATHER FILTER MAINTENANCE.	ADMINISTRATIVE. WORK PACKAGE NOT PROPERLY PREPARED, NO PERSON-IN-CHARGE.
RL-WHC-TANKFARM-1990-0087	09/27/1990	UNCONTROLLED ACCESS TO HIGH RADIATION AREAS, IMPROPER ACCESS TO S/SX/SY FARMS DUE TO NO CONTROL BEING PROVIDED	PERSONNEL ERROR. NOT TRAINED PROPERLY IN ACCESS CONTROL REQUIREMENTS.
RL-WHC-TANKFARM-1990-0117	10/05/1990	LOSS OF 105-A PORTABLE EXHAUSTER EFFLUENT MONITORING CAPABILITIES. FAILURE OF CAM AND RECORD SAMPLER, WHILE EXHAUSTER WAS OPERATING.	MECHANICAL. KNIFE SWITCH NOT FULLY ENGAGED.
RL-WHC-TANKFARM-1990-0145	10/14/1990	LOSS OF POWER TO A SECTION OF HANFORD 230 KV LINE. LINE FAULT CAUSED POWER LOSS AT 100-B, 100-KE, 100-KW, AND 100-N.	MECHANICAL. CONTAMINATED INSULATOR CAUSED POWER POLE FIRE.
RL-WHC-TANKFARM-1990-0186	10/30/1990	241-A-105 UNEXPLAINED TEMPERATURE INCREASE DURING EXHAUSTER OPERATION AND FAILURE TO NOTIFY DOE IN A TIMELY MANNER. SOIL TEMPERATURE UNDER THE WASTE TANK READ 297oF, LIMIT IS 300oF. NO SPECIFICATIONS OR REQUIREMENTS WERE VIOLATED.	MECHANICAL/PERSONNEL ERROR. UNDERGROUND THERMOCOUPLE WIRE HAD DETERIORATED. OPERATIONS FAILED TO REPORT INCREASING TEMPERATURE AS REQUIRED.
RL-WHC-TANKFARM-1990-0319	12/12/1990	INADVERTENT SHUTDOWN OF 241-SY PRIMARY EXHAUSTER, OPERATOR OPENED INCORRECT CIRCUIT BREAKER.	PERSONNEL ERROR. BREAKERS WAS NOT LABELED, OPERATOR DID NOT VERIFY CORRECT CIRCUIT BREAKER.
RL-WHC-TANKFARM-1990-0386	12/26/1990	STEAM COIL LEAK AT 242-S EVAPORATOR RESULTS IN ACTIVATION OF FIRE SPRINKLER SYSTEM. SPRINKLER WAS LOCATED IN THE HVAC FILTER SYSTEM PLENUM.	MECHANICAL/ADMINISTRATIVE. FAILED STEAM COIL, ROOT CAUSE WAS FAILURE TO REPLACE COILS WHEN NOTIFIED OF REPLACEMENT NEED IN JUNE, 1989.
RL-WHC-TANKFARM-1991-0003	01/03/1991	DISABLING OF AUDIBLE ALARM ANNUNCIATOR, ALARM PANEL "A", 242-S EVAPORATOR. ALARM PANEL "ACKNOWLEDGE" BUTTON WAS HELD IN WITH WEDGED PAPER CLIP, PREVENTING SIX ALARMS FROM SOUNDING.	ADMINISTRATIVE. PROCEDURE VIOLATION.
RL-WHC-TANKFARM-1991-0011	01/06/1991	FREEZING OF 241-A-401 COOLING TOWER SPRAY LINE RESULTS IN UTILIZATION OF BACKUP SYSTEM.	PERSONNEL ERROR/WEATHER CONDITIONS. TWO VALVES HAD BEEN LEFT CLOSED PREVENTING THE COOLING TOWER PIPING FROM DRAINING. THE WATER FROZE AND RENDERED THE PIPING INOPERABLE.
RL-WHC-TANKFARM-1991-0061	01/18/1991	242-T ALPHA CONTINUOUS AIR MONITOR DISABLED, OSR VIOLATION. VACUUM PUMP WAS INTENTIONALLY UNPLUGGED BY A HEALTH PHYSICS TECHNICIAN.	PROCEDURE VIOLATION. EMPLOYEE INDICATED THE NOISE FROM THE PUMP RESULTED IN A HEADACHE.
RL-WHC-TANKFARM-1991-0079	01/25/1991	LOSS OF ACCOUNTABILITY OF RADIOACTIVE SOURCES.	ADMINISTRATIVE. SOURCE LOCATIONS NOT UPDATED, MULTIPLE SERIAL NUMBERS ON SOURCES, LACK OF TRAINING, REQUIREMENTS AND MANAGEMENT EXPECTATIONS NOT EASILY DERIVED.
WHC-91-0096-TFARM	01/16/1991	ADDITION OF TWO TANKS, 241-T-107 AND 241-TY-104, TO THE LIST OF UNREVIEWED SAFETY QUESTION TANKS CONTAINING FERROCYANIDE.	FURTHER REVIEW OF HISTORICAL RECORDS INDICATED THESE TANKS SHOULD BE ADDED TO THE LIST OF 22 FERROCYANIDE TANKS.

Table D3.2-2. Summary of Occurrences. (33 sheets)

RL-WHC-TANKFARM-1991-0099	01/31/1991	LOSS OF 244-CR RECORD SAMPLER, DUE TO LOW FLOW CAUSED BY A HIGH DIFFERENTIAL PRESSURE ACROSS THE PRE-FILTERS.	ADMINISTRATIVE. DATA SHEET SPECIFICATIONS DID NOT AGREE WITH OSD REQUIREMENTS. SYSTEM REACTED AS DESIGNED.
RL-WHC-TANKFARM-1991-0103	02/01/1991	DAMAGED HEAT TRACE LINE CAUSES ELECTRICAL SHOCK.	MECHANICAL. DAMAGED HEAT TRACE LINE ALLOWED DRAIN PIPE TO BE ENERGIZED. WORKED CONTACTED PIPE AND RECEIVED ELECTRICAL SHOCK.
RL-WHC-TANKFARM-1991-0192	03/06/1991	242-S PUMP ROOM FLOODED (7 FT) BY DAMAGED FIRE SYSTEM PIPING, CAUSED BY FREEZING CONDITIONS.	WEATHER CONDITIONS/PROCEDURE ERROR. FIRE SYSTEM OUT OF SERVICE FOR REPAIR, PROCEDURE DID NOT INCLUDE PUMP ROOM OR EVAPORATOR ROOM.
RL-WHC-TANKFARM-1991-0200	03/21/1991	POTENTIAL DISTURBANCE OF 241-SY-101 TANK CRUST. WHILE RAISING A RISER COVER TO INSTALL VAPOR SPACE PROBES, AN UNEXPECTED CABLE WAS DISCOVERED, ATTACHED TO THE RISER COVER. ASSUMED THE WORK DISTURBED THE CRUST.	ADMINISTRATIVE. CONFIGURATION CONTROL PROBLEM, SLUDGE WEIGHT CABLE LOCATION WAS UNKNOWN PRIOR TO WORK.
RL-WHC-TANKFARM-1991-1001	04/01/1991	LOSS OF TANK PRESS. INDICATION IN 241-SY TANK FARM, OPERATIONAL SAFETY REQUIREMENT VIOLATION. RELAY FAILURE CAUSED LOSS OF BOTH AIR COMPRESSORS, AIR MONITORING AND ALARM CAPABILITIES.	MECHANICAL/ADMINISTRATIVE. RELAY FAILURE. AIR DRYER IN 242-S OUT OF SERVICE FOR TWO YEARS, LOSS OF AIR COMPRESSORS ALLOWED MOISTURE IN LINES CAUSING FLUCTUATING READINGS AND WATER IN ROTAMETERS.
RL-WHC-TANKFARM-1991-1002	04/04/1991	MISSED PROGRAMMATIC MILESTONE FOR 242-A EVAPORATOR RE-START.	ADMINISTRATIVE. ADDITIONAL WORK TAKEN ON WITHOUT CHANGING THE MILESTONE DATE. FAILURE TO USE A FORMALIZED CHANGE CONTROL SYSTEM.
RL-WHC-TANKFARM-1991-1008	04/18/1991	DIESEL FUEL SPILL FROM THE EMERGENCY GENERATOR AT 241-SY TANK FARM.	PERSONNEL ERROR. THE FUEL TANK WAS OVERFILLED, WHEN HEATED UP DO TO WARM WEATHER, THE FUEL EXPANDED AND OVERFLOWED.
RL-WHC-TANKFARM-1991-1012	05/05/1991	244-AR VAULT PORTABLE COMPRESSOR FUEL LEAK DUE TO FUEL FILTER SEAL RUPTURE.	ADMINISTRATIVE. MAINTENANCE NOTED THAT THE SEAL NEEDED TO BE CHANGED BUT TWO COMPRESSORS HAD BEEN OUT OF SERVICE FOR A YEAR, IT COULD NOT BE SHUT DOWN.
RL-WHC-TANKFARM-1991-1021	06/21/1991	TANK 241-C-104 CORE SAMPLE EXCEEDED CRITICALITY SPECIFICATIONS. THIS INFRACTION WAS DECLARED FIVE YEARS AFTER THE SAMPLE WAS TAKEN, AN ERROR IN THE LABORATORY DATA TRANSMITTAL WAS DISCOVERED. NO INFRACTION ACTUALLY OCCURRED.	ADMINISTRATIVE. LACK OF ADMINISTRATIVE CONTROL IN REVIEWING DATA.
RL-WHC-TANKFARM-1991-1030	07/24/1991	POTENTIAL LOCK AND TAG PROCEDURE VIOLATION AT 216-A 29-A DIVERSION BOX. CHAIN WHICH HAD LOCKED VALVE 216-A-29-A-1, APPEARED TO HAVE BEEN CUT AND THE VALVE PARTIALLY OPENED.	MALICIOUS OR CRIMINAL INTENT.
RL-WHC-TANKFARM-1991-1050	10/02/1991	UNPLANNED LIQUID LEVEL INCREASE IN TANK 241-AW-102. LEVEL INCREASED ONE INCH OVER ONE SHIFT. EYEWASH UNIT WAS LEFT ON, OR LEAKED, AND DRAINED INTO TANK.	MANAGEMENT PROBLEM, IMPROPER RESOURCE ALLOCATION.
RL-WHC-TANKFARM-1991-1053	10/18/1991	241-TX LOCK AND TAG VIOLATION, A BREAKER WAS IN THE ON POSITION WITH A TAG INDICATING IT WAS LOCKED IN THE OFF POSITION.	ADMINISTRATIVE/PERSONNEL ERROR. PROCEDURE DID NOT INDICATE THE BREAKER COULD BE CHANGED, CUSTODIAN DID NOT TELL TAG INSTALLER TO CHANGE POSITION.
RL-WHC-TANKFARM-1991-1056	10/25/1991	SUSPECT SINGLE SHELL TANK pH LEVELS. INFORMATION WAS PRESENTED AT A DNFSB MEETING WHICH INDICATED pH LEVELS OF SIX TO EIGHT IN THE 1940s AND 1950s.	MANAGEMENT DECISION. IN CONSIDERATION OF TANK SPACE PRESERVATION.
RL-WHC-TANKFARM-1991-1058	11/07/1991	LOSS OF 241-AN VENTILATION SYSTEM. THE PRIMARY EXHAUSTER TRIPPED ON LOW DIFFERENTIAL PRESSURE DURING A PRE-FILTER INSPECTION, THE BACKUP SYSTEM WAS TAGGED OUT FOR MAINTENANCE. NO VENTILATION SYSTEM FOR 12 MINUTES.	PLANNING DEFICIENCY. POTENTIAL FOR SYSTEM SHUTDOWN DURING PRE-FILTER INSPECTION, NO BACKUP SYSTEM AVAILABLE.

Table D3.2-2. Summary of Occurrences. (33 sheets)

RL-WHC-TANKFARM-1991-1063	11/16/1991	LOSS OF POWER TO 200 WEST TANK FARMS. LOST VENTILATION TO 241-SY FARM AND 242-T EVAPORATOR. POWER OFF FOR ONE MINUTE.	SUSPECT THAT A SMALL ANIMAL CAUSED THE OUTAGE.
RL-WHC-TANKFARM-1991-1064	11/22/1991	LOSS OF 241-AY/AZ TANK FARM BACKUP VENTILATION SYSTEM CLASS A EQUIPMENT DURING TROUBLESHOOTING.	MECHANICAL/PERSONNEL ERROR. MOTOR RESET CIRCUIT FAULT TRIGGERED AN ELECTRICAL CHAIN REACTION. RESET BUTTON SHOULD NOT HAVE BEEN PRESSED.
RL-WHC-TANKFARM-1991-1073	05/24/1991	MISSED PROGRAMMATIC MILESTONE FOR 242-A EVAPORATOR RE-START.	WORK STOPPAGE DUE TO FUNDING LIMITATIONS. LACK OF ABILITY TO HOLD THE CONSTRUCTION CONTRACTOR ACCOUNTABLE.
RL-WHC-TANKFARM-1991-1076	12/16/1991	LOCK AND TAG VIOLATION AT 241-C TANK FARM, WORK WAS DONE ON A HEAT TRACE LINE WITH NO LOCK AND TAG IN PLACE.	ADMINISTRATIVE. LOCK AND TAG CLEARED WITHOUT TESTING, PAPERWORK NOT COMPLETED.
RL-WHC-TANKFARM-1991-1079	12/23/1991	MISSED TRI-PARTY AGREEMENT MILESTONE M-05-03 FOR INTERIM STABILIZATION. COULD NOT PUMP THE TANKS AS ASSIGNED.	ADMINISTRATIVE. FAILURE TO GET OFFICIAL DETERMINATION OF IMPACTS OF INTERIM STABILIZATION ACTIVITIES.
RL-WHC-TANKFARM-1992-0007	01/22/1992	TANK FARM INTERNAL ASSESSMENTS UNCOVERED DEFICIENCIES IN SOLID WASTE COMPLIANCE ISSUES DUE TO LACK OF PROGRAMMATIC DIRECTION.	INSUFFICIENT STAFFING, TRAINING, INADEQUATE IMPLEMENTATION OF INTERNAL ENVIRONMENTAL COMPLIANCE OVERSIGHT PROGRAMS.
RL-WHC-TANKFARM-1992-0011	01/28/1992	PERSONNEL EXPOSURE TO UNKNOWN VAPORS AT B-COMPLEX RESULT IN SYMPTOMS REQUIRING MEDICAL EVALUATION.	BATTERY BOILED OVER INSIDE RADIOLOGICAL CONTROLLED AREA.
RL-WHC-TANKFARM-1992-0012	01/31/1992	OPERATIONAL SAFETY REQUIREMENT NONCONFORMANCE. DAILY READINGS COULD NOT BE OBTAINED DUE TO TANK FARM ENTRY LIMITATIONS AFTER BATTERY BOILOVER.	ADMINISTRATIVE. APPROPRIATE PERSONAL PROTECTIVE EQUIPMENT NOT AVAILABLE TO MAKE TANK FARM ENTRIES FOR SURVEILLANCE.
RL-WHC-TANKFARM-1992-0019	02/29/1992	LOSS OF PRIMARY VENTILATION IN AP-FARM. THE PRIMARY FAN TRIPPED DUE TO DIFFERENTIAL PRESSURE PROBLEMS, AND THE BACKUP FAN ATTEMPTER, BUT FAILED, TO START.	MECHANICAL.
RL-WHC-TANKFARM-1992-0022	02/28/1992	LOSS OF CONFIGURATION CONTROL IN THE 241-SY PRIMARY LEAK DETECTION SYSTEM DUE TO AN INACCURATE PROCEDURE. CONDUCTIVITY PROBE SETTINGS INCORRECT FOR 101-SY AND 103-SY.	ADMINISTRATIVE. PROCEDURES HAD NOT BEEN UPDATED TO REFLECT MODIFICATIONS IN LEAK DETECTION CONFIGURATION.
RL-WHC-TANKFARM-1992-0028	03/16/1992	200 EAST/200 WEST POWER OUTAGE. TWO BACKUP POWER SYSTEMS FAILED TO START DURING OUTAGE.	MECHANICAL. 204-AR DIESEL GENERATOR AND 241-SY TANK FARM DIESEL GENERATOR FAILED TO START WHEN REQUIRED.
RL-WHC-TANKFARM-1992-0033	04/23/1992	OSR SURVEILLANCE REQUIREMENT NOT MET, EQUIPMENT OUT OF CALIBRATION DUE TO LACK OF ADMINISTRATIVE CONTROL.	ADMINISTRATIVE. CALIBRATION CARDS FOR LOW FLOW ALARMS AT AY AND AZ TANKS WERE INACTIVATED IN 1989. CHANGES TO PISCES SYSTEM NOW REQUIRES OUTSIDE REVIEW.
RL-WHC-TANKFARM-1992-0037	04/30/1992	UNREVIEWED SAFETY QUESTION REGARDING CRITICALITY SAFETY OF TANK FARMS. SARs STATE A CRITICALITY IN WASTE TANKS IS INCREDIBLE. WE CAN NOT PROVE THIS.	ADMINISTRATIVE. INADEQUATE CHARACTERIZATION, AND LACK OF DATA ON MATERIAL DISTRIBUTION IN THE TANKS.
RL-WHC-TANKFARM-1992-0038	05/02/1992	241-A-702 STACK CONTINUOUS AIR MONITOR FAILURE.	MECHANICAL.
RL-WHC-TANKFARM-1992-0051	06/28/1992	ELECTRICAL STORM DISRUPTS 200 WEST POWER.	WEATHER CONDITIONS.

Table D3.2-2. Summary of Occurrences. (33 sheets)

RL-WHC-TANKFARM-1992-0055	07/20/1992	15 MINUTE LOSS OF VENTILATION IN 241-AP TANK FARM DUE TO PLUGGED SENSING LINE LEADING TO DIFFERENTIAL PRESSURE INDICATING SWITCH. BACKUP FAN ATTEMPTED TO START BUT TRIPPED DUE TO VALVE FAILING TO OPEN.	MECHANICAL. SENSING LINE PLUG AND INLET VALVE FAILURE.
RL-WHC-TANKFARM-1992-0066	09/15/1992	BOMB THREAT RESULTS IN 241-SY EVACUATION.	MALICIOUS INTENT OR PART OF A TRAINING EXERCISE. UNKNOWN.
RL-WHC-TANKFARM-1992-0069	09/21/1992	FLOATING LIQUID ORGANIC LAYER IN 241-C-103 DETERMINED TO BE AN UNREVIEWED SAFETY QUESTION.	ADMINISTRATIVE. FLOATING ORGANIC LAYER IS NOT ADDRESSED IN THE SAFETY ANALYSIS REPORT.
RL-WHC-TANKFARM-1992-0073	09/18/1992	DECREASE IN LIQUID LEVEL IN TANK 241-T-101. ASSUMED LEAKER.	DEFECTIVE OR FAILED MATERIAL.
RL-WHC-TANKFARM-1992-0074	10/01/1992	LEAKAGE FROM CONTAINMENT CASK CONTAINING AN AIR LANCE TAKEN FROM TANK 241-SY-101. SOIL CONTAMINATED.	DEFECTIVE OR INADEQUATE DESIGN. NEEDED A GASKET IN THE LOCKING ASSEMBLY.
RL-WHC-TANKFARM-1992-0082	11/04/1992	LOSS OF LEAK DETECTION CAPABILITIES FOR TANK 241-SY-102. ANNULUS FLAKE BOX LEAK DETECTOR PROBE FAILED. ANNULUS CAM WAS NOT FUNCTIONAL DUE TO PREVIOUS FAILURE. RESULTING LCO NONCONFORMANCE.	MECHANICAL. LEAK DETECTOR FAILURE, CAM OUT OF SERVICE DUE TO VACUUM PUMP FAILURE.
RL-WHC-TANKFARM-1993-0005	01/12/1993	MISSED SURVEILLANCE ON TK-105-C AND TK-106-C RESULT IN OSR NONCONFORMANCE.	WEATHER CONDITION. SNOW DRIFTS WAIST HIGH AND HIGH WINDS CAUSED READINGS TO BE 12 HOURS BEYOND THE LIMIT.
RL-WHC-TANKFARM-1993-0009	01/18/1993	LOSS OF PRIMARY TANK VENTILATION IN 241-AN TANK FARM. VENTILATION FAN SHUT OFF FOR UNKNOWN REASON. BACKUP FAN FAILED TO START DUE TO INCORRECT SWITCH POSITION SETTING THE FAN IN STANDBY.	MECHANICAL/PERSONNEL ERROR. SUSPECT INSTRUMENT NOISE CAUSED PRIMARY FAN FAILURE, SWITCH MISPOSITION CAUSED BACKUP FAN FAILURE TO START.
RL-WHC-TANKFARM-1993-0011	01/21/1993	TEMPORARY LOSS OF 241-AY/AZ PRIMARY TANK VENTILATION DUE TO PERSONNEL ERROR. THE TWO BACKUP FANS WERE OUT FOR MAINTENANCE.	PERSONNEL ERROR. INATTENTION TO DETAIL, ELECTRICIAN BUMPED MAGNETIC MOTOR STARTER FOR ISOLATED FAN, TRIPPING THE OPERATING FAN.
RL-WHC-TANKFARM-1993-0012	01/22/1993	AMMONIA-LIKE ODOR AFTER REMOVING 1" DRAIN PLUG FROM AIR LANCE RECEIVER.	WEATHER CONDITIONS. TEMPERATURE WARMING CONTRIBUTED TO PRESSURIZATION OF AIR IN AIR LANCE PACKAGE, WHEN PLUG WAS REMOVED, PRESSURE WAS RELIEVED.
RL-WHC-TANKFARM-1993-0023	02/11/1993	ALPHA CAM VACUUM PUMP FAILED ON EXHAUST STACK MONITOR AT 242-T EVAPORATOR. PUMP WAS UNPLUGGED FOR ROUTINE TESTING OF FLOW ALARM, PUMP FAILED TO RE-START WHEN PLUGGED BACK IN.	MECHANICAL. DEFECTIVE OR FAILED COMPONENT.
RL-WHC-TANKFARM-1993-0027	03/05/1993	TANK 101-AN LIQUID INDICATING TRANSMITTER FAILURE, SURVEILLANCE MISSED. OSR VIOLATION.	MECHANICAL/TRAINING. COMPONENT FAILURE. DELAY IN SURVEILLANCE DUE TO MAINTENANCE STAFF UNFAMILIAR WITH JOB.
RL-WHC-TANKFARM-1993-0028	03/05/1993	WASTE TRANSFER STOPPED DUE TO FAULTY AIR VALVE, LEAK BY ON BALL VALVE ALLOWED 700 GALLON TRANSFER TO 102-SY.	MECHANICAL. AIR VALVE FAILURE, BALL VALVE LEAK BY, LEAK DETECTORS FAILED TO ALARM.
RL-WHC-TANKFARM-1993-0035	03/23/1993	SINGLE SHELL TANK 241-BX-111 ASSUMED LEAKER. LEVEL DECREASE IN TANK CHANGED FROM 0.5 INCH DECREASE OVER 7 YEARS, TO ONE INCH DECREASE IN THREE MONTHS.	MECHANICAL/ADMINISTRATIVE. ASSUMED CORROSION CAUSED LEAK. TANK SERVICE LONG PAST DESIGN LIFE.

Table D3.2-2. Summary of Occurrences. (33 sheets)

RL-WHC-TANKFARM-1993-0043	03/05/1993	NON-CONFORMANCE TO STATE REQUIREMENTS CONCERNING STORING HAZARDOUS WASTE CONTAINERS.	ADMINISTRATIVE/FAILURE TO FOLLOW PROCEDURE. RESULTED IN A BACKLOG OF WASTE CONTAINERS ACCUMULATED.
RL-WHC-TANKFARM-1993-0044	05/06/1993	LIQUID OBSERVATION WELL IN TANK 241-SX-102 INDICATES LIQUID LEVEL DECREASE OF 0.4 FEET. ASSUMED LEAKER.	DEFECTIVE OR FAILED MATERIAL.
RL-WHC-TANKFARM-1993-0045	05/08/1993	WASTE CONTAINERS FOUND WITHOUT CORRECT PAPERWORK. INVENTORY OF TANK FARMS FOUND 26 OUT OF COMPLIANCE WASTE CONTAINERS (NO ACCUMULATION DATES, NO INVENTORIES, OR IMPROPER STORAGE)	ADMINISTRATIVE. LACK OF EFFECTIVE PROCEDURE TO CONTROL WASTE CONTAINERS ACCORDING TO POLICIES AND REGULATIONS.
RL-WHC-TANKFARM-1993-0057	06/22/1993	CRANE ACTIVITIES IN 241-SY TANK FARM, WIRE ROPE SEVERED, BLOCK FALLING TO GROUND.	PERSONNEL ERROR/LACK OF PROPER EQUIPMENT. INATTENTION BY CRANE OPERATOR, LACK OF ANTI TWO-BLOCKING ALARM ON CRANE MAIN HOIST.
RL-WHC-TANKFARM-1993-0063	07/15/1993	PACKAGING DISCREPANCIES OF SOLID WASTE CONTAINERS AT 241-SX FARM. LOW LEVEL WASTE BOXES CONTAINED DANGEROUS WASTE.	PROCEDURE VIOLATION.
RL-WHC-TANKFARM-1993-0069	08/04/1993	INADVERTENT START OF 241-SY-101 HYDROGEN MITIGATION PUMP.	LACK OF TRAINING, INFORMATION TAG INFORMATION INCOMPLETE.
RL-WHC-TANKFARM-1993-0072	08/11/1993	LOSS OF POWER TO AP, AW, AND AN TANK FARMS RESULTING IN LOSS OF PRIMARY EXHAUST FANS IN AP, AW, AN, AND C TANK FARMS.	POWER LOSS DUE TO LARGE BIRD LANDING ON POWER POLE AT GABLE MOUNTAIN.
RL-WHC-TANKFARM-1993-0090	10/08/1993	CALCULATION ERROR FOR AMMONIA RELEASE MECHANISM AT 241-SY-101, GENERATES USQ.	PERSONNEL ERROR IN COMPUTER INPUT FOR TANK BURN ACCIDENT CALCULATION.
RL-WHC-TANKFARM-1993-0105	12/02/1993	METHANE GAS IN SY-101 DISCOVERED TO ADD 10% MORE ENERGY TO THE BURN ANALYSIS RESULTS. NEW DATA ANALYSIS METHOD DISCOVERED DISCREPANCY.	LESS THAN EFFECTIVE MANAGEMENT METHODS. LACK OF FORMAL REPORTING METHODS BETWEEN LOS ALAMOS NATIONAL LAB AND WHC.
RL-WHC-TANKFARM-1993-0107	12/04/1993	241-SY TANK FARM ENTRANCE DURING MIXER PUMP OPERATION.	PROCEDURE VIOLATION. OPERATORS REMOVED EXCLUSION AREA BARRIERS AND ENTERED AREA WITHOUT VERIFYING PUMP TEST COMPLETION.
RL-WHC-TANKFARM-1993-0117	12/15/1993	INCORRECT SAFETY PRECAUTIONS USED DURING MAINTENANCE ACTIVITIES ON EXHAUSTER SYSTEM OF FLAMMABLE WATCHLIST TANK.	PERSONNEL ERROR. ERRONEOUS INFORMATION ON DRAWING AND INCORRECT INTERPRETATION OF DRAWING.
RL-WHC-TANKFARM-1994-0002	01/11/1994	SOIL COVER DEPTH OVER 241-SY TANKFARM TANKS EXCEEDS SPECIFICATIONS.	ROOT CAUSE ANALYSIS TO BE PERFORMED.
RL-WHC-TANKFARM-1994-0009	02/23/1994	DECREASE IN LIQUID LEVEL IN TANK 241-T-111. DECLARED ASSUMED LEAKER IN 1984.	TANK ASSUMED TO LEAK, FAILED MATERIAL, PROBABLY DUE TO CORROSION.
RL-WHC-TANKFARM-1994-0035	06/14/1994	POTENTIAL VIOLATION OF 241-AP TANKFARM DOME LOADING REQUIREMENTS. ENGINEERING REVIEW OF CONSTRUCTION DOCUMENTATION FOUND THAT DOME LOADING WAS BASED ON 110 LBS. PER CUBIC FOOT, WETTED SOIL DENSITY IS 121 LBS. PER CUBIC FOOT.	ROOT CAUSE ANALYSIS TO BE PERFORMED.

Table D3.2-2. Summary of Occurrences. (33 sheets)

RL-WHC-TANKFARM-1994-0036	07/01/1994	SURVEILLANCE ANOMALY IN 241-C-106. CYCLIC TEMPERATURE VARIATIONS OCCURRED ON ONE OF TWO THERMOCOUPLE TREES IN TANK. INCONSISTENT DATA WITH HISTORICAL DATA. EXCEEDED OPERATING SPECIFICATION OF 20 DEGREES PER DAY VARIATION.	DESIGN PROBLEM. ENERGY BUILDUP DURING TESTING WAS NOT DETECTED UNTIL AFTER THE TEST WHEN WATER ADDITION TO TANK PUSHED HOT SLUDGE UP AGAINST THE THERMOCOUPLE.
RL-WHC-TANKFARM-1994-0063	11/14/1994	MISSED SURVEILLANCE REQUIREMENTS DURING WASTE TRANSFER. COVERS ON CLEAN-OUT BOXES, PITS, AND BOXES ARE TO BE VERIFIED IN POSITION ONCE EVERY 72 HOURS DURING TRANSFER.	PERSONNEL ERROR, VIOLATION OF PROCEDURE. COVER BLOCKS WERE NOT INSPECTED AS REQUIRED.
RL-WHC-TANKFARM-1994-0070	12/12/1994	SPILL OF ONE GALLON OF WASTE AT C-110 SALTWELL AFTER FLUSH OF C-110 AND C-107.	PROCEDURE PROBLEM/MECHANICAL. SALTWELL FLUSH WATER BACKPRESSURE CAUSED WASTE WATER INTO RAW WATER FEED LINE WHERE IT LEAKED OUT OF DEFECTIVE QUICK DISCONNECTS.
RL-WHC-TANKFARM-1995-0010	01/26/1995	PERSONAL CLOTHING CONTAMINATION AT W-030 PROJECT CHANGE TRAILER. KEH PIPEFITTER HAD CONTAMINATED OVERALLS. NUCLEAR PROCESS OPERATOR BAGGED THE CLOTHING AND RELEASED THE PIPEFITTER TO GO HOME. MANAGEMENT NOT NOTIFIED.	MANAGEMENT PROBLEM. NUCLEAR PROCESS OPERATOR DID NOT NOTIFY RADIOLOGICAL CONTROL OR SHIFT MANAGER.
RL-WHC-TANKFARM-1995-0063	07/25/1995	FAILURE TO COMPLY WITH WATCHLIST CONTROLS WHEN SAMPLES FROM C-105, C-202, AND C-204, WERE TAKEN AND FORWARDED TO OPERATIONS WITHOUT HAVING WATCHLIST CONTROLS IMPOSED.	PROCEDURE VIOLATION. SHIFT MANAGER DID NOT IMPOSE WATCHLIST CONTROLS FOR SAMPLES.
RL-WHC-TANKFARM-1995-0088	10/16/1995	RECENT STUDY INDICATES 23 TANKS SHOULD BE ADDED TO FLAMMABLE GAS UNREVIEWED SAFETY QUESTION. PNL IDENTIFIED 59 TANKS WITH POSSIBLE TRAPPED GAS, BASED ON LEVEL FLUCTUATIONS. 21 OF THESE TANKS ARE MONITORED AND CONTROLLED AS WATCHLIST TANKS.	TO BE DETERMINED.
RL-WHC-TANKFARM-1996-0007	01/16/1996	OSD VIOLATION, 244-TX DCRT HYDROXIDE LEVELS NOT SUFFICIENT. SHOULD HAVE HAD 0.1178 MOLES/LITER, ONLY HAD 0.0025 MOLES/LITER. HYDROXIDE LEVEL NOT ADJUSTED AFTER SALTWELL WASTE AND FLUSH WATER TRANSFER FROM SST T-107.	IMPROPER CHEMICAL ADJUSTMENT AFTER WASTE TRANSFER.
WHC-TANKFARM-1996-0026	03/15/1996	Helicopter operated by Bechtel Nevada Corporation performing aerial radiological surveys flew over 241-A, AX, AY, AW, and C Tank Farm and was not authorized.	Although flights directly over tankfarms is prohibited, it was not recognized by personnel that this was true. Personnel error.
WHC-TANKFARM-1996-0029	03/26/1996	Cover block inspections not specified for pump pit 241-S-107-A which had waste transfer passing through it.	Inadequate procedure. It did not call for cover block inspection of this pit.
WHC-TANKFARM-1996-0032	04/08/1996	An unplanned shutdown of the 241-SY-K1-4-1 primary tank exhauster occurred. Exhauster was restarted after investigation of cause.	No cause was found.
WHC-TANKFARM-1996-0038	06/04/1996	An assessment team reviewing the "Double-shell Tank Composition Status - Quarterly Report" discovered a potential low hydroxide concern with Tank 101-AZ.	The Root Cause and Direct Cause of this event was Procedure Problem/Defective or Inadequate Procedure.
WHC-TANKFARM-1996-0044	07/01/1996	Electrical power was lost at 241-AN/AW/AP/AZ, 272-AW, and 244-AR.	A piece of foil backed paper, caught in a whirlwind shorted 2 phases on the power line west of AY Farm.
WHC-TANKFARM-1996-0047	07/07/1996	Lock and Tag placed on wrong valve on cross-site transfer line. Valve was in 153-ER and the correct valve was in 152-ER.	No mention in procedure was made to geographical location and no mention of location was discussed during the pre-job briefing prior to installing the lock out. Human Error
WHC-TANKFARM-1996-0050	07/15/1996	During excavation of Tank C-104, riser #14, it was found that no flange was covering access to tank. Instead, a piece of lead shielding was covering the opening.	The exact cause of this event cannot be determined. It is evident that the riser did not have a cover flange installed when it was backfilled.

Table D3.2-2. Summary of Occurrences. (33 sheets)

WHC-TANKFARM-1996-0056	08/02/1996	During preparation to install video camera in Tank 241-A-101 a spark occurred when the electrician attached the bonding wire to the bonding bus bar.	A deficiency existed in the Tank 241-A-101 air lift circulator building electrical system. The cause of the spark was traced to wiring in the receptacles used to supply 120 VAC power due to cross-connected ground and neutral wires.
WHC-TANKFARM-1996-0066	09/04/1996	Tank C-106 dummy jumper dropped during removal from pump pit.	The grapple assembly control box fell off cabinet resulting in grapple assembly opening and the jumper twisting and tilting over.
WHC-TANKFARM-1996-0067	09/17/1996	Ninety seven gallons of water spilled into containment tent at tank C-106 pump pit.	Operator commenced water addition without verifying the lineup and without connecting the fill hose to the fill adapter as required by procedure.
WHC-TANKFARM-1996-0072	09/24/1996	Unsafe use of non-sparking tools during tank intrusive work. Use of crescent wrench combination resulted in potential for worker injury and spark creation.	Correct tools not available at the job site caused by schedule pressures. This caused the craft personnel to improvise.
PHMC-TANKFARM-1996-0002	10/08/1996	Loss of ventilation in AN Tank Farm.	During checking phase rotation of the SHMS sample pump the wrong breakers were opened. The breakers for the ventilation fans and the SHMS are directly above each other.
PHMC-TANKFARM-1996-0006	10/18/1996	241-A-A intrinsically safe leak detector does not meet design requirements of the authorization basis.	Personnel error due to inattention to detail.
PHMC-TANKFARM-1996-0010	10/29/1996	Discovery declared on authorization basis deficiency at 209-E facility. No authorization basis was found to include for the 209-E facility.	Inadequate administrative control.
PHMC-TANKFARM-1996-0016	11/26/1996	Dump truck bed contacted and broke overhead local area network cable.	Procedure not used. Human error.
PHMC-TANKFARM-1996-0018	12/11/1996	Procedure misinterpretation discovered in tankfarm operating specification document. Requirement was interpreted that there was no replacement time limit for filter replacement on a cascaded tank if its HEPA filter failed its aerosol test. The requirement actually specifies that a 7 day period is permitted for replacement.	Personnel error in interpreting this requirement.
PHMC-TANKFARM-1997-0001	01/03/97	Liquid level in 244-AR sump #1 increased from 3% to 51.5%.	During the weeks leading up; to the level increase, an unusual increase in the outside temperature resulted in a sudden and large amount of snow melt. In addition to the snow melt, an above average amount of precipitation fell during this time period. Two paths are available to cell1. One is the drain line on the concrete encasement line from 151-AR diversion box. The other is the drain line located at the bottom of the failed equipment storage containers.
PHMC-TANKFARM-1997-0002	01/07/97	Ruptured sanitary water line causes flooding in wet grout facility, Module G3.	The facility was left in an "abandon as is" condition and the sanitary water was not secured to the eye wash station. No freeze protection was provided and the line froze and broke when the outside temperature went below freezing. The root cause is failure to recognize hazards for abandoned facilities.
PHMC-TANKFARM-1997-0003	12/27/1996	241-SY primary exhauster unexpectedly shut down.	Frozen pressure sensor line due to water accumulation coupled with low ambient temperatures. Inadequate design of the sensor line.

Table D3.2-2. Summary of Occurrences. (33 sheets)

PHMC-TANKFARM-1997-0004	12/30/1996	Unplanned loss of ventilation at 242-S Building.	An electrical short due to motor bearing failure permitting armature to contact stator winding caused the exhauster motor to fail.
PHMC-TANKFARM-1997-0006	01/09/1997	102-AZ primary tank pressurization alarm received after maintenance on the service water system in AZ Tankfarm.	A worker left a wrong valve open during testing of a repair of an instrument line leak. This resulted in the tank ventilation system seal loop filling. The valve was mislabeled.
PHMC-TANKFARM-1997-0007	01/17/1997	106-AN transfer pump operated for 4 hours with the Tankfarm Master Pump Shutdown (MPS) alarm activated.	Multiple personnel errors in communication and recognition of an undesirable condition. Procedures not used or used incorrectly. Inattention to detail. Ground in adjacent fused grounding panel allowed pump relay to remain energized even though the MPS was tripped.
PHMC-TANKFARM-1997-0008	01/19/1997	241-SY Primary exhauster shut down during troubleshooting activities. (Backup P-28 exhauster manually started)	Inadvertent cycling of the main breaker to the CAM cabinet resulted in CAM high radiation alarm relay being de-energized immediately causing exhauster shutdown. Procedure not used or used incorrectly. Violation of administrative procedure.
PHMC-TANKFARM-1997-0009	01/23/1997	241-SY Tank farm primary exhauster shutdown resulting in activation of pressurization alarm. Exhauster was restarted within 1 minute of shutting down.	Inadequate design resulted in an erroneous signal of high vacuum in header to occur when panel door was shut.
PHMC-TANKFARM-1997-0011	01/23/1997	244-AR Sump #2 water intrusion due to ruptured sanitary water line outside the facility.	Two water lines broke outside the 244-AR facility. Water flowed toward the facility, entered the control room, flowed around the north east side of the facility and entered the ground near the seal pot manhole. Current drawings do not show a potential leak path, but the rapid rise in sump level was concurrent with the water line breakage.
PHMC-TANKFARM-1997-0013	01/28/1997	Liquid levels in 240-S-302 Catch tank and 240-S-151 Diversion box showed a marked increase in liquid level.	Rain water and snow melt accumulated in an area that permits drainage to the diversion box. The tape used to augment the cover block seals had deteriorated from exposure to the elements. The cover block seals do not make a water tight seal.
PHMC-TANKFARM-1997-0023	02/20/1997	Loss of AW Tankfarm ventilation system results in a pressurization alarm.	Electrician was installing the cover on EDS-DP-203 when it slipped down causing the main breaker and adjacent breaker to turn off. Per work package, the crew did not attempt to reset the breakers, but finished the panel installation. Human error.
PHMC-TANKFARM-1997-0029	03/17/1997	Electrical line severed during excavation. A buried electrical conduit was severed by a backhoe during excavation activities for the W-058 Cross Site Transfer Line Project.	The excavation permit issued for this work was less than adequate. A recent project had installed perimeter lighting around the 241-SY Tank Farm. The as-built drawings for this installation were not reviewed during the preparation stage of the excavation permit.
PHMC-TANKFARM-1997-0033	03/27/1997	Unanticipated shutdown of the P-28 backup exhauster for the 241-SY Tank Farm. Shutdown was discovered when personnel responded to tank farm high pressure alarm. 45 minutes later the primary exhauster was started.	Cause is unknown.
PHMC-TANKFARM-1997-0035	04/02/1997	Unexpected loss of 242-S K1-5-3 exhauster. Approximately one half hour later the exhauster was restarted.	An electrician performing de-winterization opened circuit breaker #5 inside the K1-5-3 CAM enclosure. When the breaker was opened the exhauster shutdown. The winterization procedure was inadequate in providing direction on how heat trace was to be shutoff.

Table D3.2-2. Summary of Occurrences. (33 sheets)

PHMC-TANKFARM-0036	04/06/1997	Tank 105-AN experienced a gas release event (GRE)	Gas generation in tank coupled with changing weather conditions.
PHMC-TANKFARM-0037	04/07/1997	Unexplained decrease in 244-AR Sump #2 level. The surface level in the 244-AR decreased 2.57 inches in the prior 4 weeks.	Cause unknown.
PHMC-TANKFARM-0048	05/30/1997	An Apollo-owned Grove 30 Ton hydraulic crane tipped while lifting trench box components.	Operator failed to extend all outriggers. Operator mis-estimated actual load and crane capacity. Human error.
PHMC-TANKFARM-1997-0049	05/31/1997	Momentary power loss at 200 west tank farms causes exhauster to unexpectedly shutdown.	Unexplained momentary power loss.
PHMC-TANKFARM-1997-0055	06/29/1997	Momentary power loss at 200 west tank farms causes exhauster s to unexpectedly shutdown.	Momentary power loss may be connected with dust devil activity.
PHMC-TANKFARM-1997-0064	08/06/1997	Loss of tank farm ventilation power to 241-SY, 244-TX, 242-T, 241-SX exhausters, and the S and T CASS substations. The power surge also caused the 204-AR Backup Generator to start and come on line.	Tank & Toilet service contractor inadvertently caught crane hook on utility pole guy wire and caused pole to be pulled to the ground breaking the wire. Human error.
PHMC-TANKFARM-1997-00065	08/10/1997	Unplanned shutdown of the 296-S-15 "Sludge Cooler" exhauster in the 241-SX tank farm. At 0050 hrs CASS operator reported a 241-SX loss of ventilation alarm. Exhauster restarted at 0110 hrs and shutdown after 5 minutes. Operators switched to South fan and restarted at 0120 hrs. Fan shutdown at 0154 hrs and trouble shooting went on for 90 minutes unsuccessfully. Electricians were dispatched for trouble shooting and could find nothing wrong. Exhauster was started and operated normally.	The direct cause was determined to be electrical or instrument signal noise.
PHMC-TANKFARM-1997-0070	08/22/1997	Unexpected shutdown of the 241-SY P-28 Portable exhauster.	The direct cause was determined to be electrical or instrument signal noise.
PHMC-TANKFARM-1997-0072	08/26/1997	101-SY mixer pump computer system not updating temperature data. On August 25, 1997 it was confirmed that tank 101-SY temperature data had not been updating the DACS system since August 6, 1997.	The cause of this event was a design problem. There was an inadequate man-machine interface. The original design of the DACS software did not include a method of alerting operators that the thermocouples had lost communications with the DACS.
PHMC-TANKFARM-1997-0073	09/08/1997	While transferring waste from Tank 101-AY to Tank 102-AW, a level increase was detected in tank 102-AY.	A three way valve on the transfer route located in the 102-AY, 02A pit was allowing waste to leak by the valve and through a drop leg into tank 102-AY. The leaking valve was part of a jumper assembly that had recently been installed by Project W-320. Although a hydrostatic test had been performed on the jumper to test welds and piping integrity, no testing had been done on the valves to ensure they did not leak through.
PHMC-TANKFARM-1997-0074	09/11/1997	Approximately 250 gallons of water which contained 20 gallons of dilute citric acid water was potentially spilled from 241-BY transfer line SN-200. The line is a direct buried pipe which is foam encapsulated. The addition of the liquid was part of an attempt to clear a blockage in the line.	The blockage occurred due to the line being inactive for an extended period of time. Corrosion of the line caused the leak.

Table D3.2-2. Summary of Occurrences. (33 sheets)

PHMC-TANKFARM-1997-0079	10/06/1997	Loss of compressed air to 244-TX dip tubes. The dip tube system is utilized to determine level and specific gravity in the DCRT. It also provides purge air to minimize the potential for flammable gas buildup in the DCRT.	An air leak developed in the air system causing the compressor to run continuously, which eventually led to a tripped breaker.
PHMC-TANKFARM-1997-0083	10/08/1997	Loss of 241-SY 296-S-15 "Sludge Cooler" exhauster.	The direct and root causes of this event have been determined to be electrical/instrument noise.
PHMC-TANKFARM-1997-0086	10/30/1997	The 241-SY Tank farm primary ventilation system unexpectedly shut down.	Inadequate/defective design caused event. High winds experienced on the Hanford site caused the 2400 Vac regulated line to come in contact with the 13.8 kv line resulting in a momentary power loss.
PHMC-TANKFARM-1997-0092	11/17/1997	Non-intrinsically safe leak detectors were discovered not to be isolated from tank 101-AN. The pit drain and drain seal designs did not adequately isolate the pit from the tank dome space during a time waste disturbing operations were occurring.	The root cause of this event was determined to be personnel error/inattention to detail. The design of the drain seal was not adequate to identify that it did not provide adequate isolation from the tank dome.
PHMC-TANKFARM-1997-0095	11/20/1997	The 241-SY primary exhauster shutdown causing the SY Farm pressurization alarm to activate.	Maintenance procedure not used or used incorrectly resulted in CAM set point not being changed as prescribed by procedure, allowing a check source to activate the CAM's interlock shutting down the exhauster.
PHMC-TANKFARM-1997-0108	12/31/1997	The 241-T-104 waste transfer pump shut down due to activation of a service water system high pressure switch.	The waste transfer line plugged during transfer and the waste solution leaked by a 3-way valve into the service water (flush) system. The valve failed to remain leak tight at the pressure of the deadheaded system. Defective component.
PHMC-TANKFARM-1998-0009	01/24/1998	A pressurization alarm was received at the CASS indicating the 241-SY double-shell tank's primary exhauster had shutdown.	No abnormal conditions were discovered to indicate what caused the shutdown. Evaluation of changes in design will be considered to prevent high winds from affecting exhauster operation.
PHMC-TANKFARM-1998-0020	03/05/1998	When nozzle E was loosened to drain a rigid jumper in 241-A-A valve pit to permit removal an unexpected amount of water drained to A-350 catch tank. The level in the tank exceeded 77 inches, beyond the range of the instrumentation.	The work package used to accomplish the work did not have proper details describing how much water, if any, should be allowed to drain to the A-A valve pit. This was a result of personnel error/inattention to detail as the cognizant engineer did not take into account several aspects of the job.
PHMC-TANKFARM-1998-0032	03/27/1998	Worker in area around 241-AZ evaporative cooling towers noticed odor of chlorine.	Cause not specified
PHMC-TANKFARM-1998-0034	03/29/1998	Unscheduled shutdown of C-106 exhaust fan.	Personnel performing routine efficiency checks of the CAM caused fan shutdown on high radiation alarm while performing the cam efficiency check.
PHMC-TANKFARM-1998-0036	03/31/1998	Inadvertent shutdown of 241-SX exhauster.	Personnel performing maintenance on the exhauster CAM inadvertently moved the interlock set point control knob, causing the exhauster to shut down.
PHMC-TANKFARM-1998-0037	04/01/1998	Loss of ventilation in tank 101-AZ.	Valve K1-2 was found shut. Cause unspecified.

Table D3.2-2. Summary of Occurrences. (33 sheets)

PHMC-TANKFARM-1998-0038	04/02/1998	Addition of soil to catch tank exclusion area results in near miss violation of technical safety requirements administrative control. Clean backfill was spread in the area above an SST underground tank just east of 221-U. Administrative controls for the catch tank area associated with tank dome loading prohibit any additional loads to be added to the catch tank dome without engineering concurrence.	Interface requirements between contractors inadequate to prevent this event.

This page intentionally left blank.

Table D3.2-3. Hazard Analysis Cause Groups and Associated Occurrences.

CAUSE GROUPS/RELATED OCCURRENCES	
ITEM	NUMBER OF OCCURRENCES
CRITICALITY	4 occurrences
FIRE/EXPLOSION	14 occurrences
TANK DOME COLLAPSE	8 occurrences
RELEASE	156 occurrences
HUMAN ERROR RELEASE	59 occurrences
NON-RELEASES / OCCUPATIONAL	0 occurrences

This page intentionally left blank.

Table D3.2-4. Occurrences Not Included in the Hazard Analysis. (4 sheets)

ITEM	OCCURRENCE	NUMBER OF OCCURRENCES	COMMENTS
1	Occupational injury (or potential)	20	Occupational. Not an official part of the study, these events were included when discovered.
2	Ventilation heater failure	2	Ventilation heater failure. This event does not cause a release of radioactive or toxic material.
3	Rotten timbers-crib subsidence	1	Rotten timbers, crib subsidence. Potential contamination spread. However, this event did not cause a release of radioactive or toxic material.
4	No protective equipment	7	No protective equipment. Included as failure to follow administrative controls in the control section of the study. This event does not cause a release of radioactive or toxic material.
5	Tank exceeds level limit	27	Tank exceeds level limit. No release from this event.
6	Waste tank level decrease	121	Waste tank level decrease. No release from these events.
7	Waste tank level increase	93	Waste tank level increase. This event does not cause a release of radioactive or toxic material.
8	Tank temperature increase	3	Tank temperature increase. This event does not cause a release of radioactive or toxic material.
9	Sampling/ surveillance failure	10	Sampling/surveillance failure. Included as the failure to follow administrative controls, in the control section of the study.
10	Instrument failure-due to auguring	1	Instrument failure-due to auguring. If this event resulted in a release, it would be included as an intrusive activity.
11	Increased radiation readings	52	Increased radiation readings. Generally, these events were a result of the migration of soil contamination in laterals or dry wells associated with waste tanks.
12	Radioactive/ toxic liquid spill	11	Radioactive/toxic spill. These events are included in the study as leaks and/or contamination spread.
13	Radiation alarm due to welding	1	Radiation alarm due to welding. This event does not cause a release, an alarm was triggered.
14	Waste tank sampler, break, rupture	2	Waste tank sampler break, rupture. Breaking a sampler does not cause a release. It is an operational problem.
15	High dP across filters	3	High dP across filters. High dP does not cause a release, filter plugging can be a precursor to filter rupture.
16	Vehicle collision in tank farm, nothing broken	3	Vehicle collision in farm, nothing broken. These events did not cause a rupture, or release.
17	Process condensate pH too low	1	Process condensate pH too low. This event entails clean water, it does not cause a release.
18	High radiation in excavation	4	High radiation in excavation. These events included personnel exposure because they were in an excavation in the tank farms. They were an occupational problem, they did not involve a release.
19	Transfer line plug	4	Transfer line plug. These events did not cause a release.
20	Steam used instead of air	1	Steam used instead of air. This event caused no release, it was an operational problem.

Table D3.2-4. Occurrences Not Included in the Hazard Analysis. (4 sheets)

ITEM	OCCURRENCE	NUMBER OF OCCURRENCES	COMMENTS
21	Indicator failure	21	Indicator failure. These events are covered in the study concerning engineered controls.
22	Pump run w/o cooling water, too acidic	2	Pump run without cooling water. This event caused no release.
23	Re-used o.o.s. waste tank	1	Re-use of out-of-service waste tank. This event is a violation of administrative controls, it did not cause a release.
24	Intentional violation of admin. controls	8	Intentional violations of administrative controls. Included in the administrative control section of the study.
25	Water spill	11	Water spill. These events involved clean water, no release.
26	Encasement contamination	2	Encasement contamination. This event involved a leak into a pipe encasement, which prevented a spill.
27	Instrument air off, inaccurate instr. readings	2	Instrument air off: inaccurate instrument readings. This event is included in the failure to follow administrative controls. This event does not cause a release, it is an operational problem.
28	Tank level below minimum limit	3	Tank level below minimum limit. This is an operational problem, a violation of administrative controls. No release.
29	Rad. activity on filters	3	Radiation activity on filters. This event does not cause a release. The filters did their job, buildup on the filters is an operational problem.
30	Personnel contamination or over-exposure	16	Personnel contamination or over exposure. The study scope did not include these events, they were noted when discovered in the analysis. Does not include a release.
31	Undetected basin filling	1	Undetected basin filling. This was an operational problem in that the process was not detected, and it caused a large volume of slightly contaminated water to have to be added to the waste tank inventory. No release.
32	Rad. discharge to crib exceeded limits	3	Radiation discharge to crib exceeded limits. This event is a violation of administrative controls, but does not result in a release.
33	Waste stuck in caisson	1	Waste stuck in caisson. This event is an operational problem, but does not result in a release.
34	Burial box failure	1	Burial box failure. This event is a potential for a spread of contamination, but did not result in a release.
35	Loss of emergency power	3	Loss of emergency power. These events did not result in a release, they are an operational, administrative, problems.
36	Pond rad. exceeded limits	1	Pond radiation exceeded limits. This event is a violation of administrative controls, but does not result in a release.
37	Violation of admin. controls	70	Violation of administrative controls. These are operational problems, and included in the controls section of the study, but these violations did not result in a release.
38	Error in computer for safety calculations	2	Error in computer for safety calculations. Errors in computer codes do not cause a release. These codes are to help understand the behaviors of emissions.
39	Loss of electric power	12	Loss of electric power. This event was covered in the What If Analysis, and was found to not be a significant contributor to a release.

Table D3.2-4. Occurrences Not Included in the Hazard Analysis. (4 sheets)

ITEM	OCCURRENCE	NUMBER OF OCCURRENCES	COMMENTS
40	Activation of fire system	1	Activation of fire system. This is an operational problem, does not cause a release.
41	Loss of accountability of rad. sources	1	Loss of accountability of radiation sources. This is a failure to maintain administrative controls, but does not cause a release.
42	Ferrocyanide USQ	1	Ferrocyanide USQ. This event does not cause a release, it is an administrative process.
43	Unknown cable attached to riser	1	Unknown cable attached to riser. This event was not looked at specifically, it did not cause a release or spread of contamination.
44	Missed milestone	5	Missed milestones. These events are administrative milestones, no release mechanism is involved.
45	Tank contents, extremely low pH	3	Tank contents, extremely low pH. The tanks involved in these events are small, not the large waste tanks. The potential for causing a release due to pH is small. These events did not cause a release.
46	Criticality USQ-SSTs	1	Criticality USQ.
47	Bomb threat	1	Bomb threat. This is an administrative and operational problem. No release is involved.
48	Organic layer, C-103 USQ	1	Organic layer, C-103 USQ. There is no release involved with this event.
49	Pressurized air lance package	1	Pressurized air lance package. The results of this event were considered as a contamination spread or spray leak.
50	Stack monitor failure	2	Stack monitor failure. This event does not cause a release, it results in a failure to follow administrative controls if not repaired.
51	Waste packaging violations	2	Waste packaging violations. These violations did not cause a release, they are a violation of administrative controls which were included in the control section of the study.
52	Flammable gas USQ	1	Flammable gas USQ.
53	Improper chemical adjustment	1	Improper chemical adjustment. This event is included in the administrative controls section of the study, the solution did not cause a release.
54	Diesel generator failure	1	Diesel generator failure. this event was considered in the What If Analysis, it is not a significant contributor to a release.
55	Tank pressurized	21	Tank pressurized. Waste tank pressurization was considered in the Hazard Analysis. It is not a significant problem unless accompanying a filter breach.
56	Oil line ruptured, smoked	1	Oil line ruptured, smoked. This event is a potential for fire in a contaminated location.
57	Air compressor failure	6	Air compressor failure. This event was considered in the What If Analysis and is not a significant contributor to a release.
58	Inadvertent flow to crib	1	Inadvertent flow to crib. This event involved steam condensate flow to a crib. It is not a release, like a raw water spill, but a failure to follow administrative controls.
59	Human error tripped alarms	3	Human error tripped alarm. These events did not involve a release, but were operational problems.

Table D3.2-4. Occurrences Not Included in the Hazard Analysis. (4 sheets)

ITEM	OCCURRENCE	NUMBER OF OCCURRENCES	COMMENTS
60	Removal of thermocouple tree, bent and broken	1	Removal of thermocouple tree, bent and broken. This was an operational problem, not a release.
61	Riser not symmetrical	1	Riser not symmetrical. This was an operational problem, not a release.
62	Raw water usage unexplained	2	Raw water usage unexplained. These events did not result in a release, but were a control problem.
63	Sludge cooler high vacuum	1	Sludge cooler high vacuum. This was an operational problem, not a potential release.
64	Pipe discovered w/in buffer zone of tank farm	1	Pipe found within tank farm buffer zone. No release, problem with controlled drawings.
65	Core sample USQ	1	Core sample USQ. Core sample containing reactive components, inadvertent addition of aggravating material.
66	Carbon monoxide trip due to operating truck	1	Carbon monoxide trip due to operating truck. This event was an operational problem, not a release.
67	Steam trap failure	1	Steam trap failure. This event creates an industrial hazard due to leak temperature, but it does not result in a release.
68	MUST tanks-unknown status	1	MUST tanks-unknown status. MUST tanks were included in the study.
69	Rotary Mode Core Sampler operated out-of-specs	5	Rotary Mode Core Sampler operating out-of-specifications. These are administrative control problems, they do not result in a release.
70	Wrong length auger rod	1	Wrong length auger rod. Operational problem, this event did not cause a release.
71	RMCS over energized	1	Rotary Mode Core Sampler over-energized. Operational and industrial safety problem, no release.
72	Discovery of drug paraphernalia	1	Discovery of drug paraphernalia. This event indicates a personnel problem, does not result in a release.
73	Soil contamination far deeper than expected	1	Soil contamination deeper than expected. This event was considered as the spread of contamination, section 8.5.

Table D3.3-1. Analyzed Accidents. (4 sheets)

BIN	ID	Material at Risk	Hazardous Condition	Cause	Freq NC	Safety Cons NC	Cause Grp	Rep Acc
ANALYZED ACCIDENT: Nuclear Criticality								
A-1-a	I-PFP-1-AGT-A	Fission product gasses and aerosols from receiver tank.	Release of fission product gasses and aerosols from receiver tank due to: Potential for solids to collect in D-5 If mixed later, potential for composition of next batch to exceed Criticality Prevention Specifications (CPS). Potential "Criticality Issue".	Human Error or Agitator fails results in criticality	F3	S2	A05	01
ANALYZED ACCIDENT: In-Tank Fuel Fire/Deflagration								
A-1-a	EE-05-a	Contents of SST tank, fires and possible explosions	Release of radioactive or hazardous materials from SST tank due to external fires	Run-away vehicle or truck shears off one or more risers, ruptures gasoline tank	F3	S3	B25	02A
A-1-a	EE-05-b	Contents of DST tank, fires and possible explosions	Release of radioactive or hazardous materials from DST tank due to external fires	Run-away vehicle or truck shears off one or more risers, ruptures gasoline tank	F3	S3	B25	02B
ANALYZED ACCIDENT: Mixing of Incompatible Material - Tank Pressurization								
B-1-a	I-222S-1-RXN-A	Aerosols and/or toxic vapors from receiver tank	Release of aerosols and/or toxic vapors from receiver tank due adverse chemical reactions from incompatible waste.	Transfer of incompatible waste	F3	S2	D01	03
ANALYZED ACCIDENT: Flammable Gas Deflagrations - DST								
A-1-a	ITK-10-b	DST tank inventory	Release of radioactive material from in-tank fire or explosion due to intrusive activity (Dome Collapse)	Spark from equipment or tools	F3	S3	B04	04
ANALYZED ACCIDENT: Flammable Gas Deflagrations - SST								
A-1-a	XS-01-FLOW03	SST and DCRT tank contents	Release of liquids, solids, and-or vapors from single shell tank due to dome collapse and DCRT pressurization caused by flammable gas explosion/fire propagating from DCRT to single shell tank	Pipeline connecting single shell tank and DCRT fills with flammable gas; loss of ventilation flow in DCRT so that a flammable gas atmosphere is ignited by the ventilation outlet heater	F2	S3	B07	05
ANALYZED ACCIDENT: HEPA Filter Failure - Exposure to High Temperature or Pressure								
A-1-a	106C-10J	Tank atmosphere and surface contamination on HEPA filters	Release of radioactive and/or hazardous material from C-106 tank due to tank structural damage, HEPA damage caused by high temperature	Fire in or around ventilation system	F2	S2	B09	06

Table D3.3-1. Analyzed Accidents. (4 sheets)

BIN	ID	Material at Risk	Hazardous Condition	Cause	Freq NC	Safety Cons NC	Cause Grp	Rep Acc
ANALYZED ACCIDENT: Fire in Contaminated Area								
A-1-a	CRN-05	Pits and risers inventory	Release of radioactive and/or toxic materials from pits and risers due to fuel tank fire in crane or support vehicle (see In-Tank Equipment Installation for tank fires)	Human error in positioning crane load	F3	S2	B26	07
ANALYZED ACCIDENT: Waste Transport Vehicle Accident								
A-1-a	VEH-03	Sample transport cask	Release of radioactive or toxic material from cask due to damage to transport casks during a high wind/tornado	High wind/tornado	F2	S2	D20	08
ANALYZED ACCIDENT: Organic Solvent Fire/Organic Salt-Nitrate Reaction								
A-1-a	I-222S-1-CMP-E	Aerosols from receiver tank or 244-S	Release of radioactive aerosols to the atmosphere from 244-S or receiver tank due to over pressurization of tank caused by organic fire.	Human Error - Upset of 222-S Lab operations	F3	S3	B01	09
ANALYZED ACCIDENT: Natural Phenomena - High Wind								
A-1-a	CRN-13-a	Tank Inventory	Release of radioactive or toxic material from tank/equipment damage and dome collapse due to boom failure	High wind	F3	S3	D20	10
ANALYZED ACCIDENT: Natural Phenomena - Lightning								
A-1-a	NP-03	Headspace inventories and combustion products from tank fire	Radioactive and hazardous material releases from tanks due to fire in tanks	Lightning strikes riser in tank farm	F2	S2	B21	11
ANALYZED ACCIDENT: Tank Failure Due to Excessive Loads								
B-1-a	CRN-03	Tank inventory	Release of radioactive and/or toxic materials from tank due to dome collapse	Human error results in excessive weight on dome	F3	S3	C10	12A
B-1-a	CRN-04	Tank inventory.	Release of radioactive and/or toxic materials from tank due to dome collapse	Crane or rigging failures drop load resulting in large impact to dome	F3	S3	C10	12B
B-1-a	CRN-11	Tank inventory	Radioactive or toxic material release from tank due to boom failure and tank/equipment damage and dome collapse	Human error: improper load assembly, rigging, crane overloaded	F3	S3	C10	12C
ANALYZED ACCIDENT: Tank Failures Due to Vacuum or Degradation								
B-1-a	114SX-06.a.3	Radioactive material contained in the tank (this tank has a dry crust which may be composed of easily disturbed dusty material)	Release of radioactive aerosols from Tank SX-114 waste to the atmosphere due to dome collapse as a result of loss of strength due to aging	Long term aging resulting in tank degradation	F1	S3	C12	13

Table D3.3-1. Analyzed Accidents. (4 sheets)

BIN	ID	Material at Risk	Hazardous Condition	Cause	Freq NC	Safety Cons NC	Cause Grp	Rep Acc
ANALYZED ACCIDENT: Natural Phenomena - Seismic								
B-1-a	NP-07	Multiple tanks and ventilation systems inventories, 204-AR tanker spill	Radioactive and hazardous material releases from tanks and ventilation systems due to seismic event	Earthquake collapses domes	F1	S3	D18	14
ANALYZED ACCIDENT: Spray Leak in Structure or from Overground Waste Transfer Lines								
B-1-a	XS-06-FLOW02	DCRT waste being transferred to 102-SY	Release of liquid radioactive waste from DCRT transfer piping to 102-SY due to spray leak in DCRT pump pit	Pipe failure in DCRT pump pit causing spray leak	F2	S3	D12	15
ANALYZED ACCIDENT: Spray Leak from Underground Waste Transfer Lines								
B-1-a	EE-16	Material leaked from transfer line	Release of radioactive and hazardous material from transfer line spray leak due to excavation error	Excavation into waste transfer line during a transfer	F3	S3	D22	16
ANALYZED ACCIDENT: Caustic Spray Leak								
B-1-a	107AN-02-PRES	Contents of caustic truck	Release of caustic aerosol from caustic truck transfer piping due to spray leak	Piping/hose leak initiated by various causes	F3	S2	D12	17
ANALYZED ACCIDENT: Tank Bump								
B-1-a	102AW-02-TEMP02	DST tank vapors/aerosols	Release of radioactive aerosols from tank 102-AW due to tank bump	High heat waste combined with loss of ventilation contributes to tank bump	F2	S2	D01	18A
ANALYZED ACCIDENT: Unfiltered Release								
B-1-a	114SX-04.c.2.a	Radioactive aerosols contained in the tank headspace	Radioactive aerosols released from Tank SX-114 headspace to atmosphere due to exhauster HEPA filter seal failure	HEPA filter seal failure	F3	S2	D07	18B
ANALYZED ACCIDENT: Subsurface Leak Resulting in Pool								
B-3-b	XS-07-FLOW02	Liquid radioactive waste transferred out of DCRT	Release of radioactive waste to soil from transfer piping out of 244-TX DCRT due to leak in primary pipe and encasement	Corrosion of inner and outer pipe	F3	S2	D16	21A
B-3-b	XS-07-FLOW06	Liquid radioactive waste transferred out of DCRT	Release of radioactive waste to soil from transfer pipe out of 244-TX-DCRT due to leak in primary pipe and encasement	Water hammer causes failure of primary pipe and encasement	F3	S2	D17	21B
ANALYZED ACCIDENT: Evaporator Dump								
C-1-a	102AW-02-PRES%102 AW-02-TEMP	DCRT tank vapor/aerosols	Release of radioactive aerosols from 102-AW due to pressurization	Evaporator dump when intrusive activity is occurring which causes pressurization	F3	S2	D01	22

Table D3.3-1. Analyzed Accidents. (4 sheets)

BIN	ID	Material at Risk	Hazardous Condition	Cause	Freq NC	Safety Cons NC	Cause Grp	Rep Acc
ANALYZED ACCIDENT: Mixing of Incompatible Material - Toxic Vapor Generation								
C-1-a	XS-26-PRES%XS-26-TEMP	DST vapor/aerosols	Release of toxic vapors from 102-SY due to chemical reaction	Mistransfer of incompatible waste causes chemical reaction	F3	S2	E06	23
ANALYZED ACCIDENT: Leak from Rail Car/Tank Trailer								
B-2-b	204AR-01H	20,000 gallons of liquid radioactive waste from the rail car	Release of airborne and waterborne contaminates outside building on track spur, and potential contamination in unloader room from rail car due to spilling rail car contents	Rail car rupture due to collision with other or a derailment	F2	S2	D25	25
ANALYZED ACCIDENT: Surface Leak Resulting in Pool								
C-2-b	W058-PRES01	Amount of slurry transferred (20,000 to 1,000,000 gallons)	Release of radioactive slurry to the soil surface from overflow in the SY-A or SY-B valve pit due to piping system leak (Pool)	Water hammer plus mitigative features failure	F3	S2	D17	26
ANALYZED ACCIDENT: Unplanned Excavation/Drilling in Pond/Crib/Ditch								
C-2-c	CDP-10	Portion of radioactive material present in crib, ditch, or pond	Release of radioactive contamination to soil surface from excavation or drilling in cribs, ditches, or ponds that disturbs radioactive material	Excavation or drilling	F3	S2	D22	28
ANALYZED ACCIDENT: Subsurface Leak Remaining Subsurface								
B-3-b	102S-01.b3	Radioactive/hazardous material contained in pumpable liquids from S-102.	Radioactive liquid released to the soil subsurface from leaks in transfer Lines SL-140, SN-242. (Plume)	Line leak during saltwell pumping (corrosion)	F3	S2	D12	29
ANALYZED ACCIDENT: Sodium Fire								
A-1-a	2727W-06	Building inventory	Release of hazardous materials from 2727W due to sodium-water reactions	High wind or tornado destroys building with rain/snow	F2	S2	D20	30
ANALYZED ACCIDENT: Above Ground Structure Failure								
B-1-a	ITK-FR-08	DST & SST tank liquid held in flex receiver	Release of radioactive aerosols/vapors from flex receiver due to structural failure	High winds tear flex receiver bag	F3	S2	D20	31
ANALYZED ACCIDENT: Steam Intrusion from Interfacing Systems								
B-1-a	I-242A-6-CMP-A	Aerosols and particulates entrained in steam from feed tank TK-AW-102.	Release (steam) of aerosols to the atmosphere through unsealed cracks in the cover blocks due to over pressurization of the receiver tank.	Human error - Steam block valve inadvertently left opened.	F3	S3	E01	32

Table D3.3-2. Analyzed Accidents and the Represented Hazardous Conditions.[1] (68 sheets)

BIN	ID	Material at Risk	Hazardous Condition	Cause	Freq NC	Safety Cons NC	Cause Grp	Rep Acc
ANALYZED ACCIDENT: Nuclear Criticality								
A-1-a	I-PFP-1-AGT-A	Fission product gases and aerosols from receiver tank	Release of fission product gases and aerosols from receiver tank due to potential for solids to collect in D-5, If mixed later, potential for composition of next batch to exceed Criticality Prevention Specifications (CPS); potential "Criticality Issue"	Human error or agitator fails results in criticality	F3	S2	A05	01
HAZARDOUS CONDITIONS								
A-1-a	102AW-08-COMP02	DST tank contents	Release of fission product gases and aerosols from Tank 241-AW-102 due to criticality	Misrouting of waste creates critical mass	F1	S2	A06	01X
A-1-a	102AW-08-COMP02A	DST tank contents	Release of fission product gases and aerosols from Tank 241-AW-102 due to criticality	Human error - addition of excess fissile material to Tank 241-AW-102 creates critical mass	F1	S2	A01	01X
A-1-a	102AW-08-COMP03	DST tank contents	Release of fission product gases and aerosols from Tank 241-AW-102 due to criticality	Non-uniform distribution of fissile material (horizontally) creates critical mass	F1	S2	A02	01X
A-1-a	102AW-08-COMP04	DST tank contents	Release of fission product gases and aerosols from Tank 241-AW-102 due to criticality	Non-uniform distribution of fissile material (vertically) due to addition of "rich" layer	F1.	S2	A02	01X
A-1-a	102AW-08-COMP05	DST tank contents	Release of fission product gases and aerosols from Tank 241-AW-102 due to criticality	Over concentration of waste creates critical mass	F0	S2	A03	01X
A-1-a	102S-04.e4	Tank waste/vapor space	Release of radioactive gases and aerosols from Tank 241-S-102 vapor space to atmosphere due to criticality	Criticality (misrouting)	F1	S2	A06	01X
A-1-a	106C-01N	Tank inventory	Release of radioactive and/or hazardous material from Tank 241-C-106 due to high temperature in tank	Criticality in waste tank	F1	S2	A05	01X

Table D3.3-2. Analyzed Accidents and the Represented Hazardous Conditions.[1] (68 sheets)

BIN	ID	Material at Risk	Hazardous Condition	Cause	Freq NC	Safety Cons NC	Cause Grp	Rep Acc
A-1-a	114SX-05.c.2c	Radioactive aerosols created by criticality event	Release pf radioactive gases and aerosols as well as direct radiation from Tank SX-114 due to criticality	Criticality (difficult to achieve concentration needed and difficult to obtain configuration required)	F1	S2	A05	01X
A-1-a	244AR-03.a.09	Fission product gases generated by the criticality	Release of radioactive aerosols created by criticality to the cell atmosphere	Criticality in waste	F1	S2	A05	01X
A-1-a	I-PFP-1-CMP-B	Fission product gases and aerosols from receiver tank	Release of fission product gases and aerosols from receiver tank due to, potential for localized concentration of fissile materials in receiver tank from failure to add ferric nitrates; potential "Criticality Issue"	Failure to add ferric nitrates, results in criticality	F3	S2	A01	01X
A-1-a	I-PFP-1-CMP-D	Fission product gases and aerosols from receiver tank	Release of fission product gases and aerosols from receiver tank due to excess fissile material in waste, potential to exceed criticality prevention specification requirements for shipment; potential "Criticality Issue"	Excess fissile content added to waste results in criticality	F3	S2	A01	01X
B-1-a	I-PUREX-3-CMP-E	Fission product gases and aerosols from receiver tank	Release of fission product gases and aerosols from receiver tank due to criticality caused by exceeding Criticality Prevention Specifications for shipment from PUREX	Transfer of L Cell sump water to Tank F-18 and eventually to the Tank Farms	F3	S2	A01	01X
A-1-a	ITK-06	Radionuclides from criticality plus tank wastes	Release of radioactive and/or hazardous material from point of in-tank access (non-fire, non-explosion) due to criticality	Intrusive activity causes critical mass	F1	S2	A04	01X
A-1-a	ITK-06-I	Material inside MISF	Release of radioactive and/or hazardous material from point of in-facility access due to criticality within the in-facility waste during intrusive activity (non-fire, non-explosion)	Criticality from intrusive activity	F1	S2	A04	01X

Table D3.3-2. Analyzed Accidents and the Represented Hazardous Conditions.[1] (68 sheets)

BIN	ID	Material at Risk	Hazardous Condition	Cause	Freq NC	Safety Cons NC	Cause Grp	Rep Acc
A-1-a	XS-03-LEVE02 XS-21-LEVE (244-S DCRT)	DCRT tank contents	Release of fission product gases and aerosols from 244-TX DCRT due to criticality	Evaporation of DCRT contents with increased solids settling on DCRT bottom creates critical mass	F3	S2	A02	01X
A-1-a	XS-03-TEMP02 XS-21-TEMP (244-S-DCRT)	DCRT tank contents	Release of fission product gases and aerosols from 244-TX DCRT due to criticality	Transfer of material into tank that violates criticality specification	F3	S2	A01	01X
A-1-a	XS-06-FLOW01	DCRT tank contents	Release of fission product gases and aerosols from 244-TX DCRT due to criticality	Transfer of inadequately recirculated waste from tank due to failure to appropriately balance flow between recirculation and transfer line causing buildup of solids creating critical mass	F3	S2	A06	01X
A-1-a	XS-13-PRES04	Catch tank contents	Release of fission product gases and aerosols from catch tank 241-U-301B due to criticality	Transfer of excess fissile material to catch tank creates critical mass	F1	S2	A01	01X
A-1-a	XS-20-FLOW05	Catch tank/DCRT tank contents	Release of fission product gases and aerosols from 244-S DCRT (not designated solids receiver) due to criticality	Transfer of waste from 244-TX DCRT due to improper valve lineup creates critical mass	F1	S2	A06	01X
A-1-a	XS-26-PRES XS-26-TEMP 102-AW-TEMP (FOR TK-102-AW)	DST tank contents	Release of fission product gases and aerosols from Tank 241-SY-102 due to criticality	Transfer of critical mass of fissile material and achievement of critical geometry	F1	S2	A01	01X
ANALYZED ACCIDENT: In-Tank Fuel fire/Deflagration								
A-1-a	EE-05-a	Contents of SST tank, fires and possible explosions	Release of radioactive or hazardous materials from SST tank due to external fires	Run-away vehicle or truck shears off one or more risers, ruptures gasoline tank	F3	S3	B25	02A

Table D3.3-2. Analyzed Accidents and the Represented Hazardous Conditions.[1] (68 sheets)

BIN	ID	Material at Risk	Hazardous Condition	Cause	Freq NC	Safety Cons NC	Cause Grp	Rep Acc
A-1-a	EE-05-b	Contents of DST tank, fires and possible explosions	Release of radioactive or hazardous materials from DST tank due to external fires	Run-away vehicle or truck shears off one or more risers, ruptures gasoline tank	F3	S3	B25	02B
			HAZARDOUS CONDITIONS					
A-1-a	102AW-03-TEMP01	DST tank contents	Release of liquids, solids and/or vapors from Tank 241-AW-102 due to dome collapse caused by an fire/explosion in the annulus	Fire/ Explosion of flammable liquid spilled into annulus via a riser	F2	S3	B09	02X
A-1-a	102AW-09-COMP02	DST tank contents	Release of radioactive waste aerosols from Tank 241-AW-102 due to fire in fuel spilled in waste tank causing dome collapse	Spill of fuel from external source plus fuel reaching flash point or being aerosolized plus ignition source	F2	S3	B09	02X
A-1-a	102S-03.b4	Tank contents	Release of radioactive aerosols to atmosphere from Tank 241-S-102 due to burning fuel flowing into waste tank causing dome collapse	Vehicle drives into open riser puncturing gas tank + Ignition + Flammable organic vapors in tank	F3	S3	B25	02X
A-1-a	EE-04-a	SST tank contents	Release of radioactive and hazardous materials from SST tank due to external fires	Vehicle accident involving propane, diesel or gasoline delivery	F2	S3	B25	02X
A-1-a	EE-04-b	DST tank contents	Release of radioactive and hazardous materials from DST tank due to external fires	Vehicle accident involving propane, diesel or gasoline delivery	F2	S3	B25	02X
A-1-a	LDUA 2-2	Aerosols and other radioactive material in single shell tank	Release of aerosolized waste to the atmosphere from headspace of single shell tank due to ignition of hydraulic fluid	Structural failure of hydraulic system	F2	S3	B09	02X
A-1-a	102AW-03-TEMP02	DST tank contents	Release of radioactive aerosols from Tank 241-AW-102 due to fire/explosion in annulus damaging primary tank	Flammable concentration of gases in annulus vapor space due to spill of fuel into annulus and spark source	F2	S2	B09	02X

Table D3.3-2. Analyzed Accidents and the Represented Hazardous Conditions.[1] (68 sheets)

BIN	ID	Material at Risk	Hazardous Condition	Cause	Freq NC	Safety Cons NC	Cause Grp	Rep Acc
A-1-a	102S-03.b3	Tank contents	Release of radioactive aerosols to atmosphere from Tank 241-S-102 due to burning fuel flowing into waste tank due to ignition of fuel from ruptured gas tank.	Vehicle drives into open riser puncturing gas tank + Ignition	F2	S2	B25	02X
A-1-a	VEH-07-I	Material in MISF	Release of radioactive or toxic material from MISF due to riser being sheared off and possibly vehicle gas tank ruptured and fire	Vehicle moving near facility risers	F3	S2	B25	02X
ANALYZED ACCIDENT: Mixing of Incompatible Material - Tank Pressurization								
B-1-a	I-222S-1-RXN-A	Aerosols and/or toxic vapors from receiver tank	Release of aerosols and/or toxic vapors from receiver tank due adverse chemical reactions from incompatible waste	Transfer of incompatible waste	F3	S2	D01	03
HAZARDOUS CONDITIONS								
C-1-a	102AW-02-TEMP 102AW-08-TEMP	DST tank vapor/aerosols	Release of radioactive aerosols from Tank 241-AW-102 due to positive pressure	Chemical reaction heating up and/or agitating tank causes positive pressure in tank	F2	S2	E15	03X
B-1-a	102AW-02-TEMP01	DST tank vapor/aerosols	Release of radioactive aerosols from Tank 241-AW-102 due to boiling waste	High heat waste causing boiling	F2	S2	D01	03X
B-1-a	106C-01G	Tank atmosphere	Release of radioactive and/or hazardous material from Tank 241-C-106 tank, due to waste reaction causing local discharge of contamination through blown HEPAs or out cover blocks	Addition of acid to tank	F2	S2	E01	03X
C-1-a	106C-01H	Tank atmosphere, residual filter surface contamination	Release of radioactive and/or hazardous material from Tank 241-C-106, through blown HEPAs or out cover blocks due to tank boiling with vent path blocked or failed	Tank boiling with lack of vent path	F2	S2	D07	03X
B-1-a	106C-01M	Tank inventory	Release of radioactive and/or hazardous material from Tank 241-C-106, due to high temperature in the waste tank	Exothermic, chemical reaction in tank due to inadvertent addition to tank	F2	S2	E01	03X

Table D3.3-2. Analyzed Accidents and the Represented Hazardous Conditions.[1] (68 sheets)

BIN	ID	Material at Risk	Hazardous Condition	Cause	Freq NC	Safety Cons NC	Cause Grp	Rep Acc
C-1-a	106C-12F	Tank inventory	Release of radioactive and/or hazardous material from Tank 241-C-106 tank due to waste reaction in tank	Added chemicals to tank instead of normal water addition	F2	S2	E01	03X
C-1-a	107AN-02-FLOW01	Contents of DST	Release of radioactive aerosols from Tank 241-AN-107 due to surface chemical reaction	Transfer of incompatible chemical to tank via chemical addition system due to vendor or paperwork error	F3	S2	E01	03X
C-1-a	107AN-02-FLOW02	Contents of DST	Release of toxic vapors from Tank 241-AN-107 due to surface chemical reaction	Transfer of incompatible chemical to tank via chemical addition system due to vendor or paperwork error	F3	S2	E01	03X
B-1-a	CCF-01	Head space inventories from actively ventilated tanks	Radioactive and hazardous release from tanks due to extended loss of ventilation (over 6 months)	Sustained loss of offsite power	F1	S2	D07	03X
B-1-a	CCF-20	Contents of two tanks	Release of radioactive and hazardous aerosols/vapors from tanks due to chemical reactions between waste and added materials	Reactive chemical additions to two tanks	F2	S2	D01	03X
B-1-a	I-222S-2-FLW-C	Aerosols and/or toxic vapors from receiver tank	Release of aerosols and/or toxic vapors from receiver tank due adverse chemical reactions from incompatible waste	Human error - incorrect valve line up	F2	S2	E06	03X
B-1-a	I-BPLANT-2-FLW-D	Receiver tank waste	Release of aerosols and/or toxic vapors from receiver tank due to transfer of incompatible waste from B Plant	Human error - communication error between B Plant and TWRS causes transfer of incompatible waste	F3	S2	E01	03X
C-1-a	XS-02-FLOW03	DCRT tank vapors/aerosols	Release of toxic gases (oxides of nitrogen) from DCRT due to chemical reaction	Chemical reaction between sodium nitrite (DCRT) and nitric acid (PFP transfer) due to failure to adjust waste pH prior to transfer	F2	S2	E01	03X

Table D3.3-2. Analyzed Accidents and the Represented Hazardous Conditions.[1] (68 sheets)

BIN	ID	Material at Risk	Hazardous Condition	Cause	Freq NC	Safety Cons NC	Cause Grp	Rep Acc
B-1-a	XS-03-TEMP01	DCRT tank contents	Release of radioactive aerosols from 244-TX DCRT headspace due to positive pressure	Chemical reaction in DCRT causes positive pressure	F2	S2	D01	03X
C-1-a	XS-13-PRES01	Liquid radioactive waste contents of catch tank	Release of radioactive aerosols from 241-U-301B catch tank due to chemical reaction	Draining of incompatible chemicals to catch tank	F3	S2	D01	03X
C-1-a	XS-20-FLOW01	DCRT tank vapor/aerosols	Release of radioactive aerosols from 244-TX DCRT due to chemical reaction	Transfer of incompatible waste to 244-TX DCRT due to improper valve lineup	F3	S2	E06	03X
B-1-a	XS-20-FLOW03	DCRT tank contents	Release of radioactive aerosols from 244-TX DCRT due to positive pressure caused by chemical reaction	Chemical reaction of 244-S material with contents of 244-TX caused by misrouting	F2	S2	B06	03X
C-1-a	XS-26-PRES01	DST tank vapor/aerosols	Release of radioactive aerosols from Tank 241-SY-102 due to chemical reaction	Mis-transfer of incompatible waste causes chemical reaction	F3	S2	E06	03X
ANALYZED ACCIDENT: Flammable Gas Deflagrations - DST								
A-1-a	ITK-10-b	DST tank inventory	Release of radioactive material from in-tank fire or explosion due to intrusive activity (dome collapse)	Spark from equipment or tools	F3	S3	B04	04
HAZARDOUS CONDITIONS								
A-1-a	102AW-02-PRES01	DST tank contents	Release of radioactive aerosols from Tank 241-AW-102 due to fire/explosion in waste tank (Dome Collapse)	Flammable concentration of gases in tank vapor space with spark source	F2	S3	B08	04X
A-1-a	I-242A-1-FLW-A	Aerosols and other radioactive material from Tank 241-AW-102	Release of radioactive material from Feed Tank 241-AW-102 due to fire/explosion caused by igniting hydrogen gas when pump is damaged and possibly becomes an ignition source from dead heading	Valves fail to regulate (closed position) which fails pump and creates ignition source, sufficient hydrogen accumulation for fire/explosion.	F2	S3	B08	04X

Table D3.3-2. Analyzed Accidents and the Represented Hazardous Conditions.[1] (68 sheets)

BIN	ID	Material at Risk	Hazardous Condition	Cause	Freq NC	Safety Cons NC	Cause Grp	Rep Acc
A-1-a	I-242A-1-FLW-B	Aerosols and other radioactive material from Tank 241-AW-102	Release of radioactive material from Feed Tank 241-AW-102 due to fire/explosion caused by igniting hydrogen gas when pump is damaged and possibly becomes an ignition source	Feed pump fails and causes ignition source, sufficient hydrogen accumulation for fire/explosion	F2	S3	B08	04X
A-1-a	I-242A-1-FLW-C	Aerosols and other radioactive material from Tank 241-AW-102	Release of radioactive material from Feed Tank 241-AW-102 due to fire/explosion caused by igniting hydrogen gas when pump is damaged and possibly becomes an ignition source from dead heading	Plugged line which fails pump and causes ignition source, sufficient hydrogen accumulation for fire/explosion	F2	S3	B08	04X
A-1-a	I-242A-1-FLW-D	Aerosols and other radioactive material from Tank 241-AW-102	Release of radioactive material from Feed Tank 241-AW-102 due to fire/explosion caused by igniting hydrogen gas when pump is damaged and possibly becomes an ignition source	Pump plugged which fails pump and causes ignition source, sufficient hydrogen accumulation for fire/explosion	F2	S3	B08	04X
A-1-a	I-242A-1-FLW-E	Aerosols and other radioactive material from Tank 241-AW-102	Release of radioactive material from Feed Tank 241-AW-102 due to fire/explosion caused by igniting hydrogen gas when pump is damaged and possibly becomes an ignition source from pump cavitation	Empty feed tank which fails pump and causes ignition source, sufficient hydrogen accumulation for fire/explosion	F2	S3	B08	04X
A-1-a	ITK-11	Tank Inventory	Release of radioactive material from in-tank fire or explosion due to intrusive activity (dome collapse)	Lightning, range fire, or seismic event ignites tank vapors	F2	S3	B09	04X
A-1-a	XS-26-PRES02	DST tank contents	Release of radioactive aerosols from Tank 241-SY-102 due to flammable gas fire/explosion (dome collapse)	Accumulation of flammable gases in vapor space and spark source	F2	S3	B08	04X
A-1-a	102AW-03-LEVE01	DST tank contents	Release of radioactive aerosols from Tank 241-AW-102 due to fire/explosion in annulus	Flammable concentration of gases in annulus vapor space due to waste leak into annulus and spark source	F2	S2	B12	04X
A-1-a	102AW-03-LEVE02	Liquid radioactive waste leaked into Tank 241-AW-102 annulus	Release of radioactive aerosols from Tank 241-AW-102 due to fire/explosion in annulus	Flammable concentration of gases in annulus vapor space due to waste mis-transfer into annulus and spark source	F2	S2	B06	04X

Table D3.3-2. Analyzed Accidents and the Represented Hazardous Conditions.[1] (68 sheets)

BIN	ID	Material at Risk	Hazardous Condition	Cause	Freq NC	Safety Cons NC	Cause Grp	Rep Acc
A-1-a	ITK-FR-13	DST & SST tank liquid held in flex receiver	Release of radioactive aerosols/vapors from flex receiver due to buildup and ignition of flammable gas in receiver	Hydrogen gas buildup in tank/riser that travels into receiver with ignition source (spark from herculite or equipment)	F1	S2	B08	04X
ANALYZED ACCIDENT: Flammable Gas Deflagrations - SST								
A-1-a	XS-01-FLOW03	SST and DCRT tank contents	Release of liquids, solids and/or vapors from single shell tank due to dome collapse and DCRT pressurization caused by flammable gas fire/explosion propagating from DCRT to single shell tank	Pipeline connecting single shell tank and DCRT fills with flammable gas; loss of ventilation flow in DCRT so that a flammable gas atmosphere is ignited by the ventilation outlet heater	F2	S3	B07	05
HAZARDOUS CONDITIONS								
A-1-a	102AW-01-FLOW 102AW-02-PRES	DST tank contents	Release of liquids, solids and/or vapors from Tank 241-AW-102 due to dome collapse caused by chemical reaction of incompatible wastes	Misrouting to destination other than intended creates chemical incompatibility	F0	S3	B06	05X
A-1-a	102S-04.e3	Tank contents	Release of radioactive aerosols contained in Tank 241-S-102 vapor space to atmosphere due to generation of excessive heat leading to dome collapse	Addition of incompatible waste/chemical (misroute)	F0	S3	B06	05X
A-1-a	106C-01I	Tank inventory	Release of radioactive and/or hazardous material from Tank 241-C-106 due to possible dome collapse caused by tank high pressure	Fire in waste tank	F2	S3	B08	05X
A-1-a	106C-01J	Tank inventory	Release of radioactive and/or hazardous material from Tank 241-C-106 due to high pressure in tank and possible dome collapse	Fire/explosion in waste tank	F2	S3	B08	05X

Table D3.3-2. Analyzed Accidents and the Represented Hazardous Conditions.[1] (68 sheets)

BIN	ID	Material at Risk	Hazardous Condition	Cause	Freq NC	Safety Cons NC	Cause Grp	Rep Acc
A-1-a	106C-01Na	Tank inventory	Release of radioactive and/or hazardous material from Tank 241-C-106 due to flammable gas fire/explosion in tank caused by high temperature (dome collapse)	Chemical reaction in tank	F2	S3	B01	05X
A-1-a	106C-02A	Tank inventory	Release of radioactive and/or hazardous material from Tank 241-C-106 due to dome collapse caused by ignition of high flammable gas content in tank	High waste temperature	F2	S3	B08	05X
A-1-a	106C-02B	Tank inventory	Release of radioactive and/or hazardous material from Tank 241-C-106 due to ignition of high flammable gas content in tank and possible dome collapse	Ventilation system failure	F2	S3	B07	05X
A-1-a	106C-02C	Tank inventory	Release of radioactive and/or hazardous material from Tank 241-C-106 due to dome collapse caused by ignition of high flammable gas content in tank	Tank burp, release of trapped gas	F2	S3	B08	05X
A-1-a	106C-04A	Tank inventory	Release of radioactive and/or hazardous material from Tank 241-C-106 due to tank damage caused by flammable gas fire/explosion because of high flammable gas content in the tank (dome collapse)	High flammable gas content due to chemical reaction in sludge layer	F2	S3	B01	05X
A-1-a	106C-04B	Tank inventory	Release of radioactive and/or hazardous material from Tank 241-C-106 due to fire/explosion caused by ignition of flammable gas released from radiolysis in tank sludge	Radiolysis in sludge layer allows release of trapped gas to vapor space	F2	S3	B08	05X
A-1-a	106C-13A	Tank inventory	Release of radioactive and/or hazardous material from Tank 241-C-106 due to possible dome collapse, tank damage caused by high temperature	Fire in Tank 241-C-105 propagates into Tank 241-C-106	F2	S3	B09	05X

Table D3.3-2. Analyzed Accidents and the Represented Hazardous Conditions.[1] (68 sheets)

BIN	ID	Material at Risk	Hazardous Condition	Cause	Freq NC	Safety Cons NC	Cause Grp	Rep Acc
A-1-a	114SX-04.b.3b	Radioactive aerosols contained in tank head space	Release of radioactive aerosols from head space of Tank 241-SX-114 to atmosphere through exhaust HEPA filter due to flammable gas ignition in the headspace (dome collapse)	Flammable gas fire/explosion in Tank 241-SX-114 (Note: Tank 241-SX-114 is NOT currently identified as a Flammable Gas Watch List Tank) Requires spark to be present	F1	S3	B08	05X
A-1-a	114SX-05.b.1	Radioactive material contained in the tank (this tank has a dry crust which may be composed of easily disturbed dusty material)	Release of radioactive aerosols from Tank 241-SX-114 waste to atmosphere due to flammable gas ignition resulting in dome collapse	Radiolysis creating bubbles of gases in waste	F2	S3	B08	05X
A-1-a	114SX-06.a.1b	Radioactive material contained in the tank (this tank has a dry crust which may be composed of easily disturbed dusty material)	Release of radioactive aerosols from Tank 241-SX-114 waste to atmosphere as a result of a dome collapse	Deflagration of H2 (Implies gas generation with spark)	F1	S3	B08	05X
A-1-a	CP-MSP-05	Tank inventory	Release of radioactive or toxic material to atmosphere from waste tank due to flammable gas deflagration	Human error AND Flammable gas is present in tank AND Mechanical failure of the pipe and probe (ignition source)	F1	S3	B09	05X
A-1-a	CP-MSP-06	Tank inventory	Release of radioactive or toxic material to atmosphere due to flammable gas deflagration caused by puncture and ignition of flammable gas in transfer line which propagates to the waste tank	Human error AND Flammable gas is present in transfer pipe AND Spark from probe tip (ignition source)	F1	S3	B09	05X

Table D3.3-2. Analyzed Accidents and the Represented Hazardous Conditions.[1] (68 sheets)

BIN	ID	Material at Risk	Hazardous Condition	Cause	Freq NC	Safety Cons NC	Cause Grp	Rep Acc
A-1-a	ITK-08	Tank inventory	Release of radioactive material from in-tank fire or explosion due to intrusive activity (dome collapse)	Exothermic reaction of incompatible materials in tank	F3	S3	B04	05X
A-1-a	ITK-09	Tank inventory	Release of radioactive material from in-tank fire or explosion due to intrusive activity (dome collapse)	Failure to bond components or incorrect bonding	F3	S3	B08	05X
A-1-a	ITK-10-a	SST tank inventory	Release of radioactive material from in-tank fire or explosion due to intrusive activity (dome collapse)	Spark from equipment or tools	F3	S3	B04	05X
A-1-a	LDUA 1-25	Aerosols and other radioactive material in single shell tank	Release of aerosolized waste to the atmosphere from headspace of single shell tank due to ignition of flammable gas	Fire (electrical, lighting)	F2	S3	B04	05X
A-1-a	LDUA 1-32	Aerosols and other radioactive material in single shell tank	Release of aerosolized waste to the atmosphere from headspace of single shell tank due to ignition of flammable gas	During planned intrusive activities, sampling triggers GRE	F3	S3	B04	05X
A-1-a	LDUA 1-33	Aerosols and other radioactive material in single shell tank	Release of aerosolized waste to the atmosphere from headspace of single shell tank due to ignition of flammable gas	Non-arm end effectors (OVS, OSVS) dropped down riser	F2	S3	B04	05X
A-1-a	LDUA 2-20	Aerosols and other radioactive material in single shell tank	Release of aerosolized waste to the atmosphere from headspace of single shell tank due to ignition of flammable gas	Combustible source of gas located near the compressor intake.	F3	S3	B04	05X
A-1-a	LDUA 2-51	Aerosols and other radioactive material in single shell tank	Release of aerosolized waste to the atmosphere from headspace of single shell tank due to ignition of flammable gas	Supervisor error - arm in wrong mode, Electric remains on after air purge fault, flammable gas enters arm, spark ignites gas	F1	S3	B04	05X
A-1-a	LDUA 5-45	Aerosols and other radioactive material in single shell tank	Release of aerosolized waste to the atmosphere from headspace of single shell tank due to ignition of flammable gas	Helicopter/airplane crash	F1	S3	B23	05X

Table D3.3-2. Analyzed Accidents and the Represented Hazardous Conditions.[1] (68 sheets)

BIN	ID	Material at Risk	Hazardous Condition	Cause	Freq NC	Safety Cons NC	Cause Grp	Rep Acc
A-1-a	LDUA 6-24	Aerosols and other radioactive material in single shell tank	Release of aerosolized waste to the atmosphere from headspace of single shell tank due to ignition of flammable gas	Wrong setting on safety interlock for electric shutdown on loss of purge air	F3	S3	B09	05X
A-1-a	LDUA/EREE 1-22	Aerosols and other radioactive material in single shell tank	Release of aerosolized waste to the atmosphere from headspace of single shell tank due to ignition of flammable gas	Electrical Short in LDUA Lighting short	F2	S3	B04	05X
A-1-a	LDUA/EREE 1-28	Aerosols and other radioactive material in single shell tank	Release of aerosolized waste to the atmosphere from headspace of single shell tank due to ignition of flammable gas	Electrical Short in LDUA/ EREE Lighting short	F3	S3	B04	05X
A-1-a	XS-01-FLOW02	SST tank contents	Release of liquids, solids and/or vapors from single shell tank due to dome collapse caused by flammable gas burn	Loss of pump prime results in overheated pump that ignites flammable gas	F2	S3	B08	05X
A-1-a	XS-13-PRES02	Catch tank contents	Release of radioactive aerosols from 241-U-301B catch tank due to fire/explosion of flammable gas	Buildup of flammable gas in catch tank and spark source	F2	S3	B08	05X
A-1-a	106C-04Aa	Tank atmosphere	Release of radioactive and/or hazardous material from Tank 241-C-106 due to flammable gas content of the waste causing an exothermic reaction in waste tank	High flammable gas content in tank sludge layer due to chemical reaction	F2	S2	B08	05X
A-1-a	114SX-05.d	Radioactive material contained in tank head space	Release of radioactive aerosols from Tank 241-SX-114 head space to atmosphere due to localized fire/explosion of flammable gas	Core Sampling through a pocket of gas large enough to exceed local LFL with ignition source (spark) creates local fire/explosion	F3	S2	B08	05X
A-1-a	244AR-01.c.09	Radioactive and toxic material contained in tank	Release of radioactive aerosols from vessel headspace into canyon atmosphere due to flammable gas ignition	Ignition of flammable gas that has collected in piping and tank dome	F2	S2	B08	05X

Table D3.3-2. Analyzed Accidents and the Represented Hazardous Conditions.[1] (68 sheets)

BIN	ID	Material at Risk	Hazardous Condition	Cause	Freq NC	Safety Cons NC	Cause Grp	Rep Acc
A-1-a	244AR-02.a.03	Radioactive material contained in vessel	Release of radioactive liquid in the form of aerosols contained in a cell to the exterior of the 244-AR facility due to ignition of flammable gas	Fire/explosion from hydrogen buildup	F1	S2	B08	05X
A-1-a	244AR-03.a.04	Radioactive material contained in the tank	Release of radioactive aerosols into cell due to ignition of flammable gas in 244-AR Vault tank headspace	Fire/explosion due to ignition of accumulated flammable gas	F2	S2	B08	05X
A-1-a	BND-02	Surface contamination in pits and risers	Release of radioactive aerosols from tank due to ignition of combustibles during preparation for bonding	Drilling holes for bonding attachments causes sparks when flammable gases or materials are present	F2	S2	B04	05X
A-1-a	CP-MSP-08	Material remaining in MISF from past activity	Release of radioactive or toxic material to atmosphere from MISF Miscellaneous Inactive Storage Facilities due to flammable gas deflagration	Human error AND Mechanical failure of probe	F2	S2	B09	05X
A-1-a	ITK-08-I	Material inside MISF	Release of radioactive or toxic material from facility due to in-facility fire or explosion during intrusive activity	Exothermic reaction of incompatible materials in facility	F2	S2	B04	05X
A-1-a	ITK-09-I	Material inside MISF	Release of radioactive or toxic material from facility due to in-facility fire or explosion during intrusive activity	Failure to bond components or incorrect bonding	F2	S2	B08	05X
A-1-a	ITK-10-I	Material inside MISF	Release of radioactive or toxic material from facility due to in-facility fire or explosion during intrusive activity	Spark from equipment or tools provide an ignition source	F3	S2	B04	05X
A-1-a	NP-15	Inventory in isolated or abandoned equipment	Radioactive and hazardous material release from isolated or abandoned equipment due to fire	Hydrogen producing chemical reactions in isolated or abandoned equipment	F3	S2	B08	05X

Table D3.3-2. Analyzed Accidents and the Represented Hazardous Conditions.[1] (68 sheets)

BIN	ID	Material at Risk	Hazardous Condition	Cause	Freq NC	Safety Cons NC	Cause Grp	Rep Acc
A-1-a	RSR-06-I	Material inside MISF	Release of radioactive or toxic material from facility due to in-facility fire or explosion during riser removal activity	Failure to bond components or incorrect bonding allows electrostatic spark	F2	S2	B08	05X
A-1-a	XS-01-FLOW01	DCRT tank contents	Release of radioactive aerosols from 244-TX DCRT due to ignition of flammable gas atmosphere	Pressure drop in transfer line releases flammable gas into DCRT atmosphere and ignition source causes deflagration	F2	S2	B01	05X
A-1-a	XS-03-LEVE01 XS-21-LEVE (244-S DCRT)	DCRT tank contents	Release of combustion products from 244-TX DCRT due to flammable gas burn in tank atmosphere	Evaporation of DCRT contents causing decreased ability of waste to retain flammable gases and spark source	F2	S2	B08	05X
A-1-a	XS-03-PRES01 XS-21-PRES (244-S DCRT)	DCRT tank contents	Release of liquid aerosols from 244-TX-DCRT due to flammable gas burn in tank atmosphere	Loss of ventilation flow with accumulation of flammable gas and spark source	F2	S2	B07	05X
A-1-a	XS-03-TEMP03 XS-21-TEMP (244-S-DCRT)	DCRT tank contents	Release of liquid aerosols from 244-TX-DCRT due to flammable gas burn-fire/explosion in tank atmosphere	Buildup of gases, loss of ventilation, and spark source	F2	S2	B07	05X
A-1-a	XS-41B-LEVE01	Vent station catch tank contents	Release of radioactive aerosols from vent station catch tank due to flammable gas fire/explosion in nozzle pit	Failure to empty catch tank with buildup of flammable gas in nozzle pit plus ignition source	F2	S2	B08	05X
A-1-a	XS-41C-LEVE01	Vent station catch tank inventory	Release of radioactive aerosols from vent station catch tank due to flammable gas fire/explosion in catch tank pit	Leak of catch tank with buildup of flammable gas in catch tank pit plus ignition source	F2	S2	B08	05X
ANALYZED ACCIDENT: HEPA Filter Failure - Exposure to High Temperature or Pressure								
A-1-a	106C-10J	Tank atmosphere and surface contamination on HEPA filters	Release of radioactive and/or hazardous material from Tank 241-C-106 due to tank structural damage, HEPA damage caused by high temperature	Fire in or around ventilation system	F2	S2	B09	06

Table D3.3-2. Analyzed Accidents and the Represented Hazardous Conditions.[1] (68 sheets)

BIN	ID	Material at Risk	Hazardous Condition	Cause	Freq NC	Safety Cons NC	Cause Grp	Rep Acc
HAZARDOUS CONDITIONS								
A-1-a	102S-04.c	Tank waste/vapor space	Release of radioactive aerosols contained in Tank 241-S-102 vapor space to atmosphere due to ignition of flammable gas in tank vapor space	Concentration of H2 or Ammonia (or other flammable gasses) above LFL + Ignition source	F1	S3	B08	06X
A-1-a	102S-04.e1b	Vapor space gases	Release of radioactive aerosols contained in Tank 241-S-102 vapor space to atmosphere due to due to ignition of flammable gas in tank vapor space	Concentration of H2 or Ammonia (or other flammable gasses) above LFL + Ignition source	F2	S2	B08	06X
B-1-a	106C-01F	Tank atmosphere	Release of radioactive and/or hazardous material from Tank 241-C-106, blown out HEPA filters and/or discharge out cover blocks due to high tank pressure	Blockage of inlet, outlet and cascade lines	F2	S2	D07	06X
B-1-a	106C-11J	Tank atmosphere, residual filter surface contamination	Release of radioactive and/or hazardous material from Tank 241-C-106 due to HEPA damage, beyond 200 F design	Exhauster heater overheat	F3	S2	D07	06X
A-1-a	106C-11K	Tank atmosphere and surface contamination on HEPA filters	Release of radioactive and/or hazardous material from Tank 241-C-106 due to HEPA filter damage, spread of contamination caused by high temperature in ventilation system	Fire in exhauster ductwork	F2	S2	B07	06X
B-1-a	106C-11M	Tank atmosphere, residual filter surface contamination	Release of radioactive and/or hazardous material from Tank 241-C-106 due to damaged HEPA filters	Event that damages HEPAs	F3	S2	D07	06X
B-1-a	106C-11O	Tank atmosphere	Release of radioactive and/or hazardous material from Tank 241-C-106 due to loss of filtration	HEPA filter blowout	F2	S2	D07	06X

Table D3.3-2. Analyzed Accidents and the Represented Hazardous Conditions.[1] (68 sheets)

BIN	ID	Material at Risk	Hazardous Condition	Cause	Freq NC	Safety Cons NC	Cause Grp	Rep Acc
B-1-a	114SX-04.c.2.c	Radioactive aerosols contained in the tank headspace	Release of radioactive aerosols from Tank 241-SX-114 head space to atmosphere due to exhauster HEPA filter deterioration	Deteriorated HEPA filter	F3	S2	D07	06X
A-1-a	204AR-11F	Unloader room environment/airborne contaminants	Release of airborne radiological contamination through the ventilation stack from the unloader room atmosphere due to fire in ventilation ducting	Fire in ventilation ducting resulting in damage to the HEPA filters and release to the atmosphere	F2	S2	B07	06X
B-1-a	244AR-01.b.04	Material trapped in filter	Release of radioactive aerosols from the facility exhaust stack due to filter failure	HEPA filter fails	F3	S2	D07	06X
B-1-a	CRN-19	Contaminates on above ground equipment	Release of radioactive or toxic material from above ground tank equipment due to dropping crane load	Mechanical failure: corrosion, faulty materials (filter crush)	F3	S2	D10	06X
B-1-a	CRN-20	Surface contamination in pit or riser	Radioactive or toxic material release from pit or riser due to dropping crane load onto above ground tank equipment	High wind or seismic event (filter crush)	F3	S2	D05	06X
A-1-a	NP-02	Head space inventory in actively ventilated tanks, ventilation system inventory	Radioactive and hazardous material releases from tanks and ventilation systems due to fire	Lightning strikes ventilation system	F2	S2	B21	06X
B-1-a	XS-05-FLOW01	Radioactive material entrained in DCRT HEPA filter - DCRT aerosols	Release of aerosols and filter media from DCRT ventilation system due to HEPA filter damage	Replacement of exhaust fan with larger capacity fan causes HEPA filter damage	F2	S2	E13	06X
A-1-a	XS-05-TEMP01	Material holdup on DCRT ventilation filters	Release to atmosphere of materials from DCRT ventilation filters and tank due to filter degradation	Fire in ventilation system due to failure of ventilation heater controls	F3	S2	B07	06X
A-1-a	XS-05-TEMP02	Material holdup on DCRT ventilation filters	Release to atmosphere of materials from DCRT ventilation filters and tank due to filter degradation	Fire in ventilation system due to flammable gas buildup and ignition	F3	S2	B08	06X

Table D3.3-2. Analyzed Accidents and the Represented Hazardous Conditions.[1] (68 sheets)

BIN	ID	Material at Risk	Hazardous Condition	Cause	Freq NC	Safety Cons NC	Cause Grp	Rep Acc
ANALYZED ACCIDENT: Fire in Contaminated Area								
A-1-a	CRN-05	Pits and risers inventory	Release of radioactive and/or toxic materials from pits and risers due to fuel tank fire in crane or support vehicle (see In-Tank Equipment Installation for tank fires)	Human error in positioning crane load	F3	S2	B26	07
HAZARDOUS CONDITIONS								
B-1-a	102AW-04-STRU03	Residual contamination in pump pit	Release of radioactive particulate from Tank 241-AW-102 central pump pit due to re-suspension	Equipment drop during crane work	F2	S2	D10	07X
A-1-a	102AW-04-TEMP	Residual contamination in central pump pit	Release of radioactive particulate from Tank 241-AW-102 central pump pit due to fire	Pump motor electrical fire	F1	S2	B08	07X
A-1-a	102S-02.b1	Material leaked into the tank pump pit during saltwell pumping.	Release of radioactive aerosols to atmosphere from Tank 241-S-102 pump pit due to flammable gas generated in pump pit igniting and burning paint off pump pit walls	Jumper leak + H2 evolution (or ammonia) + Spark	F2	S2	B12	07X
A-1-a	102S-02.b2	Residual contamination in tank pump pit	Release of radioactive aerosols to atmosphere from Tank 241-S-102 due to flammable gas from tank igniting in pump pit and burning paint off pump pit	H2 /Ammonia production migrates into pump pit + Spark (pumps not operating)	F2	S2	B08	07X
A-1-a	102S-02.d2	Residual contamination in tank pump pit	Release of radioactive aerosols to atmosphere from Tank 241-S-102 due to burning fuel flowing into pit ignited from ruptured gas tank.	Vehicle drives into pit cover puncturing gas tank + Ignition	F3	S2	B25	07X
A-1-a	106C-06D	Residual pump pit contamination	Release of contamination from Tank 241-C-106 pump pit and potential worker injury due to fire	Fire in or near pump pit due to vehicle fuel spill and burn	F2	S2	B25	07X
A-1-a	106C-06L	Residual pump pit contamination	Release of contamination from Tank 241-C-106 pump pit due to fire/explosion affecting the structural integrity	Fire/explosion in pump pit	F2	S2	B09	07X

Table D3.3-2. Analyzed Accidents and the Represented Hazardous Conditions.[1] (68 sheets)

BIN	ID	Material at Risk	Hazardous Condition	Cause	Freq NC	Safety Cons NC	Cause Grp	Rep Acc
A-1-a	CRN-06	Pits and risers inventory	Release of radioactive and/or toxic materials from pits and risers due to fuel tank fire in crane or support vehicle (see In-Tank Equipment Installation for tank fires)	Mechanical failure in positioning crane load	F3	S2	B26	07X
A-1-a	CRN-07	Pits and risers inventory	Release of radioactive and/or toxic materials from pits and risers due to fuel tank fire in crane or support vehicle (see In-Tank Equipment Installation for tank fires)	Crane hits electrical lines/supplies	F3	S2	B26	07X
A-1-a	CRN-08	Pits and risers inventory	Release of radioactive and/or toxic materials from pits and risers due to fuel tank fire in crane or support vehicle (see In-Tank Equipment Installation for tank fires)	Lightning	F3	S2	B21	07X
A-1-a	CVR-05	Contamination in the pit.	Release of radioactive or hazardous material through combustion or fire/explosion of materials in pit due to human error	Failure to sniff or improper sniffing	F3	S2	B09	07X
B-1-a	CVR-15-I	Material in the pit from which a coverblock is being removed	Release of radioactive or hazardous material from pit upon dropping or falling coverblocks or pieces of coverblocks	Coverblock hooks fail or pieces of degraded coverblock fall into pit	F3	S2	D10	07X
A-1-a	VEH-01	Material available on vehicle.	Release of radioactive or toxic materials from cask due to fire caused by vehicle operation	Vehicle catches on fire	F3	S2	B09	07X
A-1-a	VEH-01-I	Material in samples from MISFs, material on equipment from inside MISFs, fuel in vehicle gas tank	Release of radioactive or toxic materials from vehicle carrying MISF samples or contaminated equipment due to vehicle fire	Vehicle catches on fire	F2	S2	B09	07X
A-1-a	XS-12-FLOW02	Residual contamination in Diversion Box 241-U-152	Release of aerosols from Diversion Box 241-U-152 due to flammable gas deflagration	Chemical reaction of catch tank material with backflow of vapors via diversion box drain line	F1	S2	B01	07X

Table D3.3-2. Analyzed Accidents and the Represented Hazardous Conditions.[1] (68 sheets)

BIN	ID	Material at Risk	Hazardous Condition	Cause	Freq NC	Safety Cons NC	Cause Grp	Rep Acc
A-1-a	XS-12-FLOW03	Residual contamination in Diversion Box 241-U-152	Release of aerosols from Diversion Box 241-U-152 due to hydrogen deflagration	Radiolysis of catch tank material with backflow of vapors via diversion box drain line and ignition source	F1	S2	B01	07X
ANALYZED ACCIDENT: Waste Transport Vehicle Accident								
A-1-a	VEH-03	Sample transport cask	Release of radioactive or toxic material from cask due to damage to transport casks during a high wind/tornado	High wind/tornado	F2	S2	D20	08
HAZARDOUS CONDITIONS								
B-1-a	VEH-02	Sample transport cask	Release of radioactive or toxic material from cask due to damage to transport casks during seismic event	Seismic event	F1	S2	D18	08X
B-1-a	VEH-02-I	Material in samples from MISFs	Release of radioactive or toxic material from MISF samples in transport casks due to seismic damage	Seismic event	F1	S2	D18	08X
NP	VEH-03-I	Material in samples from MISFs	Release of radioactive or toxic material from MISF samples in transport casks due to high wind/tornado damage	High wind/tornado	F2	S2	D20	08X
ANALYZED ACCIDENT: Organic Solvent Fire/Organic Salt-Nitrate Reaction								
A-1-a	I-222S-1-CMP-E	Aerosols from receiver tank or 244-S	Release of radioactive aerosols to the atmosphere from 244-S or receiver tank due to over pressurization of tank caused by organic fire	Human error - upset of 222-S Lab operations	F3	S3	B01	09
HAZARDOUS CONDITIONS								
A-1-a	102AW-09-COMP01	DST tank contents	Release of combustion product aerosols from Tank 241-AW-102 due to fire in separable organic layer in waste tank causing dome collapse	Organic reaching flash point or being aerosolized plus ignition source	F2	S3	B08	09X

Table D3.3-2. Analyzed Accidents and the Represented Hazardous Conditions.[1] (68 sheets)

BIN	ID	Material at Risk	Hazardous Condition	Cause	Freq NC	Safety Cons NC	Cause Grp	Rep Acc
A-1-a	I-242A-4-TMP-A	Aerosols and other radioactive material from Tank 241-AW-102	Release of radioactive material from Tank 241-AW-102 caused by ignition of organics in Tank 241-C-100 which pressurizes the drain line and propagates the fire down the line to Feed Tank 241-AW-102	Faulty control of vacuum to CA-1 vessel causing pot to boil with organic layer available	F0	S3	B08	09X
A-1-a	I-BPLANT-1-CMP-E	Receiver tank waste	Release of tank waste due to fire in receiver tank from transferring organics from B Plant	Human error - tank containing organics in B Plant rupture and spills organics to the drains which eventually end up in Tank 24-1 and an inadvertent transfer to tank farms	F1	S3	B01	09X
A-1-a	I-PFP-1-CMP-E	High level waste in the receiver tank	Release of high level waste from receiver tank due to fire from organics transferred from PFP	Excess organic material added to waste results in fire	F2	S3	B01	09X
A-1-a	RSR-07-I	Material inside MISF	Release of radioactive or toxic material from facility due to in-facility fire or explosion during riser removal activity (chosen to represent all organic nitrate tanks)	Spark from failure to use non-sparking tools or sparks from welding, cutting, grinding, etc.	F3	S2	B09	09X
ANALYZED ACCIDENT: High Wind								
A-1-a	CRN-13-a	Tank Inventory	Release of radioactive or toxic material from tank/equipment damage and dome collapse due to boom failure	High wind	F3	S3	D20	10
HAZARDOUS CONDITIONS								
B-1-a	CRN-13-IA	Contents of facility	Release of radioactive and/or toxic materials from below ground facility due to containment top collapse or equipment damage by boom failure	High wind or seismic event	F2	S2	D05	10X
NP	CRN-13-IC	Contents of facility	Release of radioactive and/or toxic materials from facility due to containment top collapse damage by boom failure	High wind or seismic event	F2	S2	D05	10X

Table D3.3-2. Analyzed Accidents and the Represented Hazardous Conditions.[1] (68 sheets)

BIN	ID	Material at Risk	Hazardous Condition	Cause	Freq NC	Safety Cons NC	Cause Grp	Rep Acc
B-3-b	CRN-23	Tank Inventory	Release of radioactive or toxic materials from tank due to loss of vertical load control, dropping crane load into tank, onto tank bottom (subsurface leak)	High wind or seismic event	F3	S2	D05	10X
B-3-b	CRN-23-IA	Contents of facility	Release of radioactive or toxic materials from underground facility bottom due to loss of vertical load control, dropping crane load into facility (subsurface leak)	High wind or seismic event	F2	S2	D05	10X
ANALYZED ACCIDENT: Lightning								
A-1-a	NP-03	Head space inventories and combustion products from tank fire	Radioactive and hazardous material releases from tanks due to fire in tanks	Lightning strikes riser in tank farm	F2	S2	B21	11
HAZARDOUS CONDITIONS								
A-1-a	EE-01	Contents of tanks in one tank farm	Release of radioactive and toxic materials from tanks due to external force and fire	Aircraft crash	F1	S3	B23	11X
A-1-a	LDUA 5-43	Aerosols and other radioactive material in single shell tank	Release of aerosolized waste to the atmosphere from headspace of single shell tank due to ignition of flammable gas	Lightning strikes VPM in raised position	F2	S3	B09	11X
A-1-a	NP-11	Tank inventories	Radioactive and hazardous material releases from tank farms due to lava flow	Eruption of molten lava from fissures	F0	S3	D18	11X
NP	ITK-11-I	Material inside MISF	Release of radioactive or toxic material from facility due to in-facility fire or explosion during intrusive activity	Lightning, range fire, or seismic event ignites facility vapors	F1	S2	B09	11X
ANALYZED ACCIDENT: Tank Failure Due to Excessive Loads								
B-1-a	CRN-03	Tank inventory	Release of radioactive and/or toxic materials from tank due to dome collapse	Human error results in excessive weight on dome	F3	S3	C10	12A

Table D3.3-2. Analyzed Accidents and the Represented Hazardous Conditions.[1] (68 sheets)

BIN	ID	Material at Risk	Hazardous Condition	Cause	Freq NC	Safety Cons NC	Cause Grp	Rep Acc
B-1-a	CRN-04	Tank inventory	Release of radioactive and/or toxic materials from tank due to dome collapse	Crane or rigging failures drop load resulting in large impact to dome	F3	S3	C10	12B
B-1-a	CRN-11	Tank inventory	Radioactive or toxic material release from tank due to boom failure and tank/equipment damage and dome collapse	Human error: improper load assembly, rigging, crane overloaded	F3	S3	C10	12C
			HAZARDOUS CONDITIONS					
B-1-a	102AW-04-STRU01A	DST tank contents	Release of liquids, solids and/or vapors from Tank 241-AW-102 due to dome collapse caused by excessive dome loading	Equipment drop during crane work causes excessive dome loading	F3	S3	C10	12X
B-1-a	102AW-04-STRU02	DST tank contents	Release of liquids, solids and/or vapors from Tank 241-AW-102 due to dome collapse caused by excessive dome loading	Violation of limits on dome loading	F3	S3	C10	12X
B-1-a	102S-05.a1a	Tank contents	Release of radioactive aerosols from Tank 241-S-102 to atmosphere due to dome collapse	Excess gravel overburden	F3	S3	C10	12X
B-1-a	102S-05.a1aa	Tank contents	Release of radioactive aerosols from Tank 241-S-102 to atmosphere due to dome collapse	Large vehicle traffic over tank	F3	S3	C10	12X
B-1-a	106C-01X	Tank inventory	Release of radioactive and/or hazardous material from Tank 241-C-106, dome structural damage and/or personnel injury due to overload of tank dome	Overweight vehicles over top of tank	F3	S3	C10	12X
B-1-a	106C-01Y	Tank inventory	Release of radioactive and/or hazardous material from Tank 241-C-106, dome structural damage and/or personnel injury due to overload of tank dome	Flooding over top of tank	F2	S3	C19	12X

Table D3.3-2. Analyzed Accidents and the Represented Hazardous Conditions.[1] (68 sheets)

BIN	ID	Material at Risk	Hazardous Condition	Cause	Freq NC	Safety Cons NC	Cause Grp	Rep Acc
B-1-a	114SX-06.a.1a	Radioactive material contained in the tank (this tank has a dry crust which may be composed of easily disturbed dusty material)	Release of radioactive aerosols from Tank 241-SX-114 waste to atmosphere due to dome collapse	Gravel overburden Large vehicle	F3	S3	C10	12X
B-1-a	CP-SET-04	Tank inventory	Release of radioactive or toxic material from waste tank due to dome collapse	Excessive weight on tank dome (static load of platform)	F2	S3	C10	12X
B-1-a	CP-SET-05	Tank inventory	Release of radioactive or toxic material from waste tank due to dome collapse caused by load drop	Mechanical failure of equipment causes load drop	F2	S3	C10	12X
B-1-a	CP-SET-06	Tank inventory	Release of radioactive or toxic material from waste tank due to dome collapse caused by load drop	Human error causes load drop	F3	S3	C10	12X
B-1-a	CRN-12	Tank inventory	Radioactive or toxic material release from tank due to boom failure and tank/equipment damage and dome collapse	Mechanical failure: corrosion, faulty materials	F3	S3	C10	12X
B-1-a	ITK-FR-04	DST & SST tank inventory	Release of radioactive aerosols from tank due to tank collapse	Equipment becomes lodged in riser, efforts to remove pull riser out of tank causing loss of structural integrity leading to tank collapse	F1	S3	C26	12X
B-1-a	ITK-FR-19	DST & SST tank inventory	Release of radioactive aerosols from tank due to dome collapse	Hydraulic jacks on assembly stand are operated while assembly is bolted to flange tearing out riser and destroying tank integrity leading to dome collapse	F1	S3	C26	12X
B-1-a	CRN-03-IA	Contents of facility	Release of radioactive and/or toxic materials from facility due to containment top collapse	Human error results in excessive weight on top of containment	F3	S2	E10	12X

Table D3.3-2. Analyzed Accidents and the Represented Hazardous Conditions.[1] (68 sheets)

BIN	ID	Material at Risk	Hazardous Condition	Cause	Freq NC	Safety Cons NC	Cause Grp	Rep Acc
B-1-a	CRN-04-IA	Contents of facility	Release of radioactive and/or toxic materials from facility due to MISF containment collapse	Crane or rigging failures drop load resulting in large impact to top of containment	F2	S2	D10	12X
B-1-a	CRN-09	Contamination emanating from tank headspace and material contained in ventilation system.	Release of radioactive and/or toxic materials from ventilation system due to crane damage	Human error in positioning crane load	F3	S2	E26	12X
B-1-a	CRN-10	Material emanating from tank headspace and the material contained in the ventilation system.	Release of radioactive and/or toxic materials from ventilation system due to crane damage	Mechanical failure in positioning crane load	F3	S2	D26	12X
B-1-a	CRN-11-IA	Contents of facility or equipment	Release of radioactive and/or toxic materials from facility due to containment top collapse or equipment damage by boom failure	Human error: improper load assembly, rigging, crane overloaded	F3	S2	E10	12X
B-1-a	CRN-12-IA	Contents of facility or equipment	Release of radioactive and/or toxic materials from facility due to containment top collapse or equipment damage by boom failure	Mechanical failure: corrosion, faulty materials	F2	S2	D10	12X
ANALYZED ACCIDENT: Tank Failure Due to Vacuum or Degradation								
B-1-a	114SX-06.a.3	Radioactive material contained in the tank (this tank has a dry crust which may be composed of easily disturbed dusty material)	Release of radioactive aerosols from Tank 241-SX-114 waste to the atmosphere due to dome collapse caused by loss of strength due to aging	Long term aging resulting in tank degradation	F1	S3	C12	13
HAZARDOUS CONDITIONS								
B-1-a	102AW-02-PRES03	DST tank contents	Release of liquids, solids and/or vapors from Tank 241-AW-102 due to dome collapse caused by excessive vacuum	Blocked ventilation inlet causes excessive vacuum leading to dome collapse	F0	S3	C07	13X

Table D3.3-2. Analyzed Accidents and the Represented Hazardous Conditions.[1] (68 sheets)

BIN	ID	Material at Risk	Hazardous Condition	Cause	Freq NC	Safety Cons NC	Cause Grp	Rep Acc
B-1-a	102AW-02-PRES04	DST tank contents	Release of liquids, solids and/or vapors from Tank 241-AW-102 due to dome collapse caused by excessive vacuum	Condensation of vapors causes excessive vacuum leading to dome collapse	F0	S3	C11	13X
B-1-a	102AW-02-PRES05	DST tank contents	Release of liquids, solids and/or vapors from Tank 241-AW-102 due to dome collapse caused by excessive vacuum	Sub-cooling of vapor during equipment flushing causes excessive vacuum leading to dome collapse	F0	S3	C11	13X
B-1-a	102AW-02-PRES06	DST tank contents	Release of liquids, solids and/or vapors from Tank 241-AW-102 due to dome collapse caused by excessive vacuum	Ventilation imbalance causes excessive vacuum leading to dome collapse	F0	S3	C07	13X
B-1-a	102AW-02-PRES07	DST tank contents	Release of liquids, solids and/or vapors from Tank 241-AW-102 due to dome collapse caused by excessive vacuum	Wrong size portable ventilator chosen for support work causes excessive vacuum leading to dome collapse	F0	S3	C13	13X
B-1-a	102AW-03-LEVE03	Radioactive waste in DST annulus	Release of liquids, solids and/or vapors from Tank 241-AW-102 due to dome collapse caused by floating the primary tank within the annulus	Misrouting of liquid waste to the annulus causes floating of primary tank and subsequent dome collapse	F1	S3	C06	13X
B-1-a	102S-04.d1	Tank waste/vapor space	Release of radioactive aerosols contained in Tank 241-S-102 vapor space to the atmosphere due to low pressure causing dome collapse	Misoperation of exhauster during saltwell pumping	F0	S3	C07	13X
B-1-a	102S-05.a3	Tank contents	Release of radioactive aerosols from Tank 241-S-102 to atmosphere due to dome collapse	Past thermocycling of tank	F1	S3	C12	13X
B-1-a	102S-05.a3a	Tank contents	Release of radioactive aerosols from Tank 241-S-102 to atmosphere due to dome collapse	Long term aging	F1	S3	C12	13X
B-1-a	106C-01A	Tank inventory	Release of radioactive and/or hazardous material from Tank 241-C-106, structural damage and dome collapse due to tank low pressure	Air inlet plugged due to icing/dust	F0	S3	C07	13X

Table D3.3-2. Analyzed Accidents and the Represented Hazardous Conditions.[1] (68 sheets)

BIN	ID	Material at Risk	Hazardous Condition	Cause	Freq NC	Safety Cons NC	Cause Grp	Rep Acc
B-1-a	106C-01B	Tank inventory	Release of radioactive and/or hazardous material from Tank 241-C-106, structural damage and dome collapse due to tank low pressure	Inlet air valve closed	F0	S3	C07	13X
B-1-a	106C-01C	Tank inventory	Release of radioactive and/or hazardous material from Tank 241-C-106, structural damage, and dome collapse due to tank low pressure	Exhauster damper positioned incorrectly	F0	S3	C07	13X
B-1-a	106C-01D	Tank inventory	Release of radioactive and/or hazardous material from Tank 241-C-106, structural damage and dome collapse due to tank low pressure	Wrong sized portable exhauster	F0	S3	C13	13X
B-1-a	106C-01E	Tank inventory	Release of radioactive and/or hazardous material from Tank 241-C-106, structural damage and dome collapse due to tank low pressure	Subcooling of tank vapor space due to water addition of flushing	F2	S3	C11	13X
B-1-a	114SX-04.a.2	Radioactive material contained in the tank (this tank has a dry crust which may be composed of easily disturbed dusty material)	Radioactive aerosols released from failed tank dome due to vacuum produced by valving error.	Human error: Valve out flammable watch list (Tank 241-SX-109) butterfly valve	F0	S3	C07	13X
B-1-a	114SX-04.a.3	Radioactive material contained in the tank (this tank has a dry crust which may be composed of easily disturbed dusty material)	Release of radioactive aerosols from Tank 241-SX-114 to atmosphere due to high temperatures causing dome concrete strength loss	No ventilation flow High ambient temperature conditions Resulting in tank degradation	F1	S3	C12	13X

Table D3.3-2. Analyzed Accidents and the Represented Hazardous Conditions.[1] (68 sheets)

BIN	ID	Material at Risk	Hazardous Condition	Cause	Freq NC	Safety Cons NC	Cause Grp	Rep Acc
B-1-a	114SX-04.b.1.a.2	Radioactive material contained in the tank (this tank has a dry crust which may be composed of easily disturbed dusty material)	Release of radioactive material from Tank 241-SX-114 to atmosphere due to high temperature in the dome leading to dome collapse (long term closure of butterfly valve)	Human error: Closure of Tank 241-SX-114 exhaust butterfly valve isolating tank from exhaust plenum Resulting in tank degradation	F1	S3	C07	13X
B-1-a	114SX-04.b.1.b.2a	Radioactive material contained in the tank (this tank has a dry crust which may be composed of easily disturbed dusty material)	Release of radioactive aerosols to atmosphere from Tank 241-SX-114 waste due to heat induced tank dome collapse	Ducting failure due to bad welds	F1	S3	C12	13X
B-1-a	114SX-04.b.1.c.2	Radioactive material contained in the tank (this tank has a dry crust which may be composed of easily disturbed dusty material)	Release of radioactive aerosols to atmosphere from Tank 241-SX-114 waste due to dome collapse	Exhauster failure Fan failure Filter rupture (low differential pressure shutdown) Resulting in tank degradation	F0	S3	C07	13X
B-1-a	114SX-04.b.1.d.2	Radioactive material contained in the tank (this tank has a dry crust which may be composed of easily disturbed dusty material)	Release of radioactive aerosols from Tank 241-SX-114 waste to atmosphere due to dome collapse	Filter plugging results in lack of heat removal with high temperatures degrading dome strength	F1	S3	C07	13X
B-1-a	114SX-05.b.3	Radioactive material contained in the tank (this tank has a dry crust which may be composed of easily disturbed dusty material)	Release of radioactive aerosols from Tank 241-SX-114 waste to atmosphere due to dome collapse caused by sudden vacuum in tank	Quenching (adding cold liquid to hot tank contents) creating a vacuum	F0	S3	C11	13X

Table D3.3-2. Analyzed Accidents and the Represented Hazardous Conditions.[1] (68 sheets)

BIN	ID	Material at Risk	Hazardous Condition	Cause	Freq NC	Safety Cons NC	Cause Grp	Rep Acc
A-1-a	114SX-05.c.2b	Radioactive material contained in the tank (this tank has a dry crust which may be composed of easily disturbed dusty material)	Release of radioactive aerosols from Tank 241-SX-114 waste to atmosphere due to dome collapse	Chemical reaction caused by addition of chemical/solution. Resulting in tank degradation	F1	S3	C01	13X
B-1-a	CCF-17	Contents of tank	Release of radioactive and hazardous materials from tank due to dome collapse	Corrosion of rebar in concrete SST domes	F1	S3	C12	13X
ANALYZED ACCIDENT: Natural Phenomena - Seismic								
B-1-a	NP-07	Multiple tanks and ventilation systems inventories, 204-AR tanker spill	Radioactive and hazardous material releases from tanks and ventilation systems due to seismic event	Seismic event collapses domes	F1	S3	D18	14
HAZARDOUS CONDITIONS								
B-1-a	102S-05.a2	Tank contents	Release of radioactive aerosols from Tank 241-S-102 to atmosphere due to dome collapse	Seismic event (common mode failure)	F1	S3	D18	14X
B-1-a	114SX-04.b.1.b.2b	Radioactive material contained in the tank (this tank has a dry crust which may be composed of easily disturbed dusty material)	Release of radioactive aerosols to atmosphere from Tank 241-SX-114 waste due to heat induced tank dome collapse	Ducting failure due to seismic activity coupled with failure to respond Resulting in tank degradation	F1	S3	D18	14X
B-1-a	244AR-02.a.14	Radioactive material contained in the four tanks and facility	Release of radioactive aerosols from waste contained in tanks (4) and building due to earthquake	Seismic event collapses building and four tanks	F1	S3	D18	14X

Table D3.3-2. Analyzed Accidents and the Represented Hazardous Conditions.[1] (68 sheets)

BIN	ID	Material at Risk	Hazardous Condition	Cause	Freq NC	Safety Cons NC	Cause Grp	Rep Acc
B-1-a	CCF-18	Contents of tanks, products of combustion	Release of radioactive and hazardous materials from tanks due to dome collapses	Fire in tank propagates to connecting tank and both tanks collapse during cooldown from negative tank pressure	F0	S3	C11	14X
B-1-a	CCF-19	Contents of tanks, products of combustion	Release of radioactive and hazardous materials from tanks due to dome collapses	Fire in tank causes pressure transient that leads to GRE in connecting tank with subsequent fire and tank collapses from negative tank pressure	F0	S3	C11	14X
B-1-a	CRN-13-b	Tank Inventory	Release of radioactive or toxic material from tank/equipment damage and dome collapse due to boom failure	Seismic event	F1	S3	D18	14X
B-1-a	NP-13	Tank head space inventories and splash from dome collapse	Radioactive and hazardous material releases from tanks due to excessive weight on dome	Accumulations of heavy snow followed by heavy rain	F2	S3	C10	14X
B-1-a	244AR-05.a.02	Total amount of radioactive material contained in facility	Release of radioactive material from facility due to seismic event which causes building collapse without cell collapse	Seismic event damages facility structure	F2	S2	D18	14X
ANALYZED ACCIDENT: Spray Leak in Structure of from Overground Waste Transfer Lines								
B-1-a	XS-06-FLOW02	DCRT waste being transferred to Tank 241-SY-102	Release of liquid radioactive waste from DCRT transfer piping to Tank 241-SY-102 due to spray leak in DCRT pump pit	Pipe failure in DCRT pump pit causing spray leak	F2	S3	D12	15
HAZARDOUS CONDITIONS								
B-1-a	102AW-01-FLOW 102AW-04-PRES	Liquid radioactive waste being transferred to DST from DCRT	Release of radioactive aerosol from transfer pipe which runs from DCRT to Tank 241-AW-102 due to spray leak into open underground structure	Piping leak due to thermal stress of transferring hot solution in cold pipe	F3	S3	D01	15X

Table D3.3-2. Analyzed Accidents and the Represented Hazardous Conditions.[1] (68 sheets)

BIN	ID	Material at Risk	Hazardous Condition	Cause	Freq NC	Safety Cons NC	Cause Grp	Rep Acc
B-1-a	102AW-01-FLOW01	Liquid radioactive waste being transferred to DST from DCRT	Release of liquid radioactive waste aerosols from transfer pipe to Tank 241-AW-102 due to spray leak into open underground structure	Piping leak due to corrosion caused by transferring high temperature waste	F2	S3	D01	15X
B-1-a	102AW-13-FLOW01	Radioactive waste being pumped from SST to DCRT	Release of radioactive waste aerosols due to spray leak of waste from flush pit	Backflow of waste to flush pit with valve or pipe leak and cover block off	F1	S3	D12	15X
B-1-a	COB-01	Transfer inventory	Release of radioactive and/or hazardous material from COB due to spray leak	Flange, gasket or valve, spray leak with COB lid removed	F3	S3	D12	15X
B-1-a	OGT-EXT3-01A	DST & SST tank inventory	Release of radioactive or hazardous aerosols from the primary pipe due to spray leak caused by truck crash into piping system	Human error, line struck by truck	F3	S3	E25	15X
B-1-a	OGT-FLOW1-03A	DST & SST tank inventory	Release of radioactive or hazardous aerosols from the primary pipe due to spray leak caused by misdirected flow	Spray leak caused by JR-1 (3-way valve) mispositioned to flush, two check valves fail, flush disconnect fails (check valve), reverse flow to external flush fixture and release to the environment	F1	S3	E06	15X
B-1-a	OGT-FLOW2-02	DST & SST tank inventory	Release of radioactive or hazardous aerosols from the primary pipe due spray leak caused by over-rated pump	Installation of incorrect pump and failure of inner pipe, failure of weld on flange of outer pipe, isolation valves closed on secondary pipe drains and no concrete shield in place	F2	S3	E13	15X
B-1-a	OGT-NP3-01	DST & SST tank inventory	Release of radioactive or hazardous aerosols from the primary pipe due spray leak caused by seismic event	Failure of line and concrete shielding during seismic event	F1	S3	D18	15X

Table D3.3-2. Analyzed Accidents and the Represented Hazardous Conditions.[1] (68 sheets)

BIN	ID	Material at Risk	Hazardous Condition	Cause	Freq NC	Safety Cons NC	Cause Grp	Rep Acc
B-1-a	OGT-NP3-02	DST & SST tank inventory	Release of radioactive or hazardous aerosols from the primary pipe due to leak caused by high wind	Pipe is blown off supports and no concrete shielding in place	F1	S3	D20	15X
B-1-a	W058-FLOW15	Amount of slurry transferrable through a limited size orifice	Release of radioactive slurry aerosols to the atmosphere caused by spray leak of slurry from the SY-A or SY-B valve pit due to piping system leak	Computer failure or human error causing misrouting of material when flow path is not completely connected	F2	S3	E06	15X
B-1-a	W058-FLOW16	Amount of slurry transferrable through a limited size orifice	Release of radioactive slurry aerosols to the atmosphere caused by spray leak of slurry from the SY-A or SY-B valve pit due to piping system leak	External leak of valve or valves to the valve pit	F2	S3	D12	15X
B-1-a	W058-FLOW17a	Amount of slurry transferrable through a limited size orifice	Release of radioactive slurry aerosols to the atmosphere caused by spray leak of slurry from the SY-A or SY-B valve pit due to piping system leak	Failure of jumper due to misalignment (human error) plus mitigative features failure	F2	S3	E06	15X
B-1-a	W058-FLOW17b	Amount of slurry transferrable through a limited size orifice	Release of radioactive slurry aerosols to the atmosphere caused by spray leak of slurry from the SY-A or SY-B valve pit due to piping system leak	Failure of jumper due to gasket failure plus mitigative features failure	F2	S3	D12	15X
B-1-a	W058-FLOW17c	Amount of slurry transferrable through a limited size orifice	Release of radioactive slurry aerosols to the atmosphere caused by spray leak of slurry from the SY-A or SY-B valve pit due to piping system leak	Failure of jumper due to corrosion plus mitigative features failure	F2	S3	D16	15X
B-1-a	W058-FLOW18	Amount of supernate transferrable through a limited size orifice	Release of radioactive supernate aerosols to the atmosphere caused by spray leak of supernate from the SY-A or SY-B valve pit due to piping system leak	Computer failure or human error causing misrouting of material when flow path is not completely connected	F2	S3	E06	15X
B-1-a	W058-FLOW19	Amount of supernate transferrable through a limited size orifice	Release of radioactive supernate aerosols to the atmosphere caused by spray leak of supernate from the SY-A or SY-B valve pit due to piping system leak	External leak of valve or valves to the valve pit plus mitigative features failure	F2	S3	D12	15X

Table D3.3-2. Analyzed Accidents and the Represented Hazardous Conditions.[1] (68 sheets)

BIN	ID	Material at Risk	Hazardous Condition	Cause	Freq NC	Safety Cons NC	Cause Grp	Rep Acc
B-1-a	W058-FLOW20a	Amount of supernate transferrable through a limited size orifice	Release of radioactive supernate aerosols to the atmosphere caused by spray leak of supernate from the SY-A or SY-B valve pit due to piping system leak	Failure of jumper due to misalignment (human error) plus mitigative features failure	F2	S3	E06	15X
B-1-a	W058-FLOW20b	Amount of supernate transferrable through a limited size orifice	Release of radioactive supernate aerosols to the atmosphere caused by spray leak of supernate from the SY-A or SY-B valve pit due to piping system leak	Failure of jumper due to gasket failure plus mitigative features failure	F2	S3	D12	15X
B-1-a	W058-FLOW20c	Amount of supernate transferrable through a limited size orifice	Release of radioactive supernate aerosols to the atmosphere caused by spray leak of supernate from the SY-A or SY-B valve pit due to piping system leak	Failure of jumper due to corrosion plus mitigative features failure	F2	S3	D16	15X
B-1-a	W058-INTEG32	Amount of supernate or slurry aerosol that could be released through a small orifice	Release of radioactive supernate or slurry aerosols to the atmosphere due to a spray leak from test risers located near SY-A and SY-B valve pits	Failure of primary piping and path for spray leak from test riser plus mitigative features failure	F2	S3	D12	15X
B-1-a	W058-INTEG34	Amount of slurry transferrable through a limited size orifice	Release of radioactive slurry aerosols to the atmosphere caused by spray leak of slurry from the SY-A or SY-B valve pit due to piping system leak	External event (airplane crash, etc)	F1	S3	D23	15X
B-1-a	W058-INTEG35	Amount of slurry transferrable through a limited size orifice	Release of radioactive slurry aerosols to the atmosphere caused by spray leak of slurry from the SY-A or SY-B valve pit due to piping system leak	Seismic event	F1	S3	D18	15X
B-1-a	W058-INTEG36	Amount of supernate transferrable through a limited size orifice	Release of radioactive supernate aerosols to the atmosphere caused by spray leak of supernate from the SY-A or SY-B valve pit due to piping system leak	External event (airplane crash, etc)	F1	S3	D23	15X
B-1-a	W058-INTEG37	Amount of supernate transferrable through a limited size orifice	Release of radioactive supernate aerosols to the atmosphere caused by spray leak of supernate from the SY-A or SY-B valve pit due to piping system leak	Seismic event	F1	S3	D18	15X

Table D3.3-2. Analyzed Accidents and the Represented Hazardous Conditions.[1] (68 sheets)

BIN	ID	Material at Risk	Hazardous Condition	Cause	Freq NC	Safety Cons NC	Cause Grp	Rep Acc
B-1-a	XS-06-FLOW03	Radioactive waste being transferred from PFP to DCRT	Release of liquid radioactive waste from transfer piping from PFP to DCRT due to spray leak in DCRT pump pit	Pipe failure in DCRT pump pit causing spray leak	F2	S3	D12	15X
B-1-a	204AR-07A	Aging waste DST tank contents	Release of liquid radioactive waste and high airborne in unloading room from the Tank 241-AY-102 due to reverse pumping of Tank 241-AY-102 contents back to 204-AR	Pump in pit 02D starts and pumps back to the 204-AR building through the transfer piping and leaks	F2	S2	E06	15X
B-1-b	I-222S-1-CMP-C	222-S lab waste from Tank 219-S-102 (capacity 4000 gal)	Release (potential spray leak) of 222-S lab waste to atmosphere in diversion box or 244-S Pump Pit due to increased corrosion from failure to add sodium hydroxide	Human error - failure to add sodium hydroxide	F3	S2	E01	15X
B-1-b	I-222S-2-LEK-B	222-S lab waste from Tank 219-S-102 (capacity 4000 gal)	Release of 222-S lab waste to the atmosphere due to spray leak at the diversion box or pump pit, caused by corrosion in the pipe	Corrosion in pipe line	F1	S2	D16	15X
B-1-b	I-222S-2-LEK-E	222-S lab waste from Tank 219-S-102 (capacity 4000 gal)	Release of 222-S lab waste to the atmosphere due to spray leak at the diversion box or pump pit, caused by rupture at pipe connections from a seismic event	Seismic event	F2	S2	D18	15X
B-1-b	I-242A-1-LEK-B	Liquid waste from Tank 241-AW-102	Release of waste from Feed Tank 241-AW-102 to the atmosphere due to spray leak at the diversion box or pump pit, caused by corrosion in the pipe	Corrosion in pipe line	F1	S2	D16	15X
B-1-b	I-242A-1-LEK-E	Liquid waste from Tank 241-AW-102	Release of waste from Feed Tank 241-AW-102 to the atmosphere due to spray leak at the diversion box or pump pit, caused by rupture at pipe connections	Seismic event causes spray leak	F2	S2	D18	15X
B-1-b	I-242A-2-LEK-B	Slurry from the evaporator	Release of slurry tank waste to the atmosphere due to spray leak at the diversion boxes or pump pit, caused by corrosion in the pipe	Corrosion in pipe line	F1	S2	D16	15X

Table D3.3-2. Analyzed Accidents and the Represented Hazardous Conditions.[1] (68 sheets)

BIN	ID	Material at Risk	Hazardous Condition	Cause	Freq NC	Safety Cons NC	Cause Grp	Rep Acc
B-1-b	I-242A-2-LEK-E	Slurry from the evaporator	Release of slurry tank waste to the atmosphere due to spray leak at the diversion box or pump pit, caused by rupture at pipe connections	Seismic event causes leak	F2	S2	D18	15X
B-1-b	I-242S-2-LEK-B	Contaminated fire water from 242-S pump room	Release of contaminated water to the atmosphere due to spray leak at the diversion box or pump pit, caused by corrosion in the pipe	Corrosion in pipe line causes spray leak	F1	S2	D16	15X
B-1-b	I-242S-2-LEK-E	Contaminated fire water from 242-S pump room	Release of contaminated water to the atmosphere due to spray leak at the diversion box or pump pit, caused by rupture at pipe connections from seismic event	Seismic event	F2	S2	D18	15X
B-1-b	I-242S-4-LEK-E	Contaminate fire water from 242-S condenser room	Release of contaminated water to the atmosphere due to spray leak at the diversion box or pump pit, caused by rupture at pipe connections from an seismic event	Seismic event causes spray leak	F2	S2	D18	15X
B-1-b	I-BPLANT-1-CMP-B	Low level waste from B Plant Tank 24-1 (administrative volume limit 7500 gal)	Release (spray leak) of low level waste at diversion box from transfer of low pH material resulting in increased corrosion in pipe	Human error - failure to add sodium hydroxide leads to corrosion and leak in pipe	F3	S2	E01	15X
B-1-b	I-BPLANT-2-LEK-B	Low level waste from B Plant Tank 24-1 (administrative volume limit 7500 gal)	Release of low level waste to the atmosphere due to spray leak at the diversion box or pump pit, caused by corrosion in the pipe	Corrosion in pipe line causes spray leak	F1	S2	D16	15X
B-1-b	I-BPLANT-2-LEK-E	Low level waste from B Plant Tank 24-1 (administrative volume limit 7500 gal)	Release of low level waste to the atmosphere due to spray leak at the diversion box or pump pit, caused by rupture at pipe connections from seismic event	Seismic event causes spray leak	F2	S2	D18	15X

Table D3.3-2. Analyzed Accidents and the Represented Hazardous Conditions.[1] (68 sheets)

BIN	ID	Material at Risk	Hazardous Condition	Cause	Freq NC	Safety Cons NC	Cause Grp	Rep Acc
B-1-b	I-PFP-2-LEK-B	TRU mixed waste from PFP Tank D-5	Release of TRU mixed waste to the atmosphere due to spray leak at the diversion box or pump pit, caused by corrosion in the pipe	Corrosion in pipe line causes spray leak	F1	S2	D16	15X
B-1-b	I-PFP-2-LEK-E	TRU mixed waste from PFP Tank D-5	Release of TRU mixed waste to the atmosphere due to spray leak at the diversion box or pump pit, caused by rupture at pipe connections	Seismic event causes spray leak.	F2	S2	D18	15X
B-1-b	I-PFP-3-LEK-B	TRU mixed waste from PFP Tank D-5	Release of TRU mixed waste to the atmosphere due to spray leak at the diversion box or pump pit, caused by corrosion in the pipe	Corrosion in pipe line causes spray leak	F1	S2	D16	15X
B-1-b	I-PFP-3-LEK-E	TRU mixed waste from PFP Tank D-5	Release of TRU mixed waste to the atmosphere due to spray leak at the diversion box or pump pit, caused by rupture at pipe connections	Seismic event causes spray leak	F2	S2	D18	15X
B-1-b	I-PUREX-1-AGT-B	TRU waste from PUREX	Release (spray leak) of TRU waste from PUREX at diversion box due to leak from increased corrosion caused by transfer of acidic waste	Human error or mechanical failure - agitator fails or is not turned on	F3	S2	D05	15X
B-1-b	I-PUREX-1-CMP-B	TRU waste from PUREX	Release (spray leak) of TRU waste from PUREX at diversion box due to leak from increased corrosion caused by transfer of acidic waste	Human error - failure to add sodium hydroxide to low level waste results in corrosion and causes spray leak	F3	S2	E01	15X
B-1-b	I-PUREX-2-LEK-B	TRU waste from PUREX	Release of TRU waste from PUREX to the atmosphere due to spray leak at the diversion box or pump pit, caused by corrosion in the pipe	Corrosion in pipe line causes spray leak	F1	S2	D16	15X
B-1-b	I-PUREX-2-LEK-E	TRU waste from PUREX	Release of TRU waste from PUREX to the atmosphere due to spray leak at the diversion box or pump pit, caused by seismic event	Seismic event causes spray leak	F2	S2	D18	15X

Table D3.3-2. Analyzed Accidents and the Represented Hazardous Conditions.[1] (68 sheets)

BIN	ID	Material at Risk	Hazardous Condition	Cause	Freq NC	Safety Cons NC	Cause Grp	Rep Acc
B-1-b	I-PUREX-3-AGT-B	TRU waste from PUREX	Release (spray leak) of TRU waste from PUREX at diversion box due to leak from increased corrosion caused by transfer of acidic waste	Agitator fails or is not turned on results in corrosion and causes spray leak	F3	S2	D05	15X
B-1-b	I-PUREX-3-CMP-B	TRU waste from PUREX	Release (spray leak) of TRU waste from PUREX at diversion box due to leak from increased corrosion caused by transfer of acidic waste	Human error - failure to add sodium hydroxide to low level waste results in spray leak	F3	S2	E01	15X
B-1-b	I-PUREX-4-LEK-B	TRU waste from PUREX	Release of TRU waste from PUREX to the atmosphere due to spray leak at the diversion box or pump pit, caused by corrosion in the pipe	Corrosion in pipe line causes spray leak	F1	S2	D16	15X
B-1-b	I-PUREX-4-LEK-E	TRU waste from PUREX	Release of TRU waste from PUREX to the atmosphere due to spray leak at the diversion box or pump pit, caused by rupture at pipe connections from seismic event	Seismic event causes spray leak	F2	S2	D18	15X
B-1-b	I-TPLANT-1-CMP-B	Low level waste from T Plant Tank 15-1 (approximate capacity 14,500 gal)	Release (spray) of low level waste at diversion box from transfer of lower pH material resulting in increased corrosion in pipe	Human error - failure to add sodium hydroxide causes corrosion and associated spray leak	F3	S2	E01	15X
B-1-b	I-TPLANT-2-LEK-B	Low level waste from T Plant Tank 15-1 (approximate capacity 14,500 gal)	Release of low level waste to the atmosphere due to spray leak at the diversion box or pump pit	Corrosion in pipe line causes spray leak	F1	S2	D16	15X
B-1-b	I-TPLANT-2-LEK-E	Low level waste from T Plant Tank 15-1 (approximate capacity 14,500 gal)	Release of low level waste to the atmosphere due to spray leak at the diversion box or pump pit, caused by rupture at pipe connections from seismic event	Seismic event causes spray leak	F2	S2	D18	15X

Table D3.3-2. Analyzed Accidents and the Represented Hazardous Conditions.[1] (68 sheets)

BIN	ID	Material at Risk	Hazardous Condition	Cause	Freq NC	Safety Cons NC	Cause Grp	Rep Acc
B-1-a	OGT-TEMP1-02	DST & SST tank inventory	Release of radioactive or hazardous vapors/aerosols from the primary pipe due to spray leak caused by high temperatures	Vehicle accident above ground starts fire, melt the EPDM hose causing a leak to secondary pipe, pumping occurring, fire fails gasket and facilitates a release to atmosphere	F1	S2	E25	15X
B-1-a	XS-01-TEMP01	Liquid radioactive waste in saltwell or PFP transfer piping to DCRT	Release of steam-aerosol from transfer piping in pump pit due to steam hammer and resulting pipe damage	Extended recirculation and consequential heating of saltwell liquid with sudden opening of valve when cover block is open	F3	S2	D06	15X
B-1-a	XS-06-FLOW04	Radioactive waste being pumped from SST to DCRT	Release of liquid radioactive waste from transfer piping from an SST to a DCRT due to spray leak (SPUTTER) of saltwell liquor from DCRT pump pit	Pipe failure	F2	S2	D12	15X
ANALYZED ACCIDENT: Spray Leak from Underground Waste Transfer Lines								
B-1-a	EE-16	Material leaked from transfer line	Release of radioactive and hazardous material from transfer line spray leak due to excavation error	Excavation into waste transfer line during a transfer	F3	S3	D22	16
HAZARDOUS CONDITIONS								
B-1-a	102AW-01-TEMP	Radioactive waste being pumped to DCRT	Release of liquid radioactive waste aerosols from transfer pipe to Tank 241-AW-102 due to spray leak of liquid waste from transfer pipe leak	Piping leak due to exceeding the design temperature of the pipe by transferring high temperature waste	F1	S3	D01	16X
B-1-b	CP-RMV-03	Material leaked from transfer line	Release of radioactive or toxic material from transfer line through the push pipe during removal activities	Human error	F1	S3	D22	16X
C-3-b	NP-08	Inventory in transfer lines	Radioactive and hazardous material releases from transfer pipes due to seismic event (possible spray leak)	Seismic event shears pipes and encasements during transfer	F2	S3	D18	16X

Table D3.3-2. Analyzed Accidents and the Represented Hazardous Conditions.[1] (68 sheets)

BIN	ID	Material at Risk	Hazardous Condition	Cause	Freq NC	Safety Cons NC	Cause Grp	Rep Acc
B-1-b	I-222S-2-LEK-C	222-S lab waste from Tank 219-S-102 (capacity 4000 gal)	Release of 222-S lab waste to the atmosphere due to spray leak at the rupture of the line	Inadvertent excavation of line	F2	S2	D22	16X
B-1-b	I-242A-1-LEK-C	Liquid waste from Tank 241-AW-102	Release of waste from Feed Tank 241-AW-102 to the atmosphere due to spray leak at the rupture of the line	Inadvertent excavation of line causes spray leak	F2	S2	D22	16X
B-1-b	I-242A-2-LEK-C	Slurry from the evaporator	Release of slurry tank waste to the atmosphere due to spray leak at the rupture of the line	Inadvertent excavation of line causes spray leak	F2	S2	D22	16X
B-1-b	I-242S-2-LEK-C	Contaminated fire water from 242-S pump room	Release of contaminated water to the atmosphere due to spray leak at the rupture of the line from excavation	Inadvertent excavation of line causes spray leak	F2	S2	D22	16X
B-1-b	I-BPLANT-2-LEK-C	Low level waste from B Plant Tank 24-1 (administrative volume limit 7500 gal)	Release of low level waste to the atmosphere due to spray leak at the rupture of the line from excavation	Inadvertent excavation of line causes spray leak	F2	S2	D22	16X
B-1-b	I-PFP-2-LEK-C	TRU mixed waste from PFP Tank D-5	Release of TRU mixed waste to the atmosphere due to spray leak at the rupture of the line	Inadvertent excavation of line	F2	S2	D22	16X
B-1-b	I-PFP-3-LEK-C	TRU mixed waste from PFP Tank D-5	Release of TRU mixed waste to the atmosphere due to spray leak at the rupture of the line	Inadvertent excavation of line	F2	S2	D22	16X
B-1-b	I-PUREX-2-LEK-C	TRU waste from PUREX	Release of TRU waste from PUREX to the atmosphere due to spray leak at the rupture of the line from inadvertent excavation	Inadvertent excavation of line causes spray leak	F2	S2	D22	16X
B-1-b	I-PUREX-4-LEK-C	TRU waste from PUREX	Release of TRU waste from PUREX to the atmosphere due to spray leak at the rupture of the line from excavation	Inadvertent excavation of line causes spray leak	F2	S2	D22	16X

Table D3.3-2. Analyzed Accidents and the Represented Hazardous Conditions.[1] (68 sheets)

BIN	ID	Material at Risk	Hazardous Condition	Cause	Freq NC	Safety Cons NC	Cause Grp	Rep Acc
B-1-b	I-TPLANT-2-LEK-C	Low level waste from T Plant Tank 15-1 (approximate capacity 14,500 gal)	Release of low level waste to the atmosphere due to spray leak at the rupture of the line from excavation	Inadvertent excavation of line causes spray leak	F2	S2	D22	16X
ANALYZED ACCIDENT: Caustic Spray Leak								
B-1-a	107AN-02-PRES	Contents of caustic truck	Release of caustic aerosol from caustic truck transfer piping due to spray leak	Piping/hose leak initiated by various causes	F3	S2	D12	17
HAZARDOUS CONDITIONS								
B-1-a	107AN-01-LEVE01	Caustic solution	Release of caustic material from truck tank due to leak (aerosol spray)	Open valve on truck with pressurized tank transfer.	F3	S2	E06	17X
B-1-a	107AN-01-LEVE02	Caustic solution	Release of caustic material from truck tank due to leak (aerosol spray)	Truck tank leak	F2	S2	D12	17X
B-1-a	107AN-01-TEMP02	Caustic solution	Spray release of caustic material from truck tank due to high temperature	Fire in gas tank	F1	S2	D09	17X
B-1-a	107AN-02-PRES02	Caustic solution	Release of caustic material from transfer piping due to high pressure (aerosol spray)	Hose disconnect	F3	S2	D06	17X
ANALYZED ACCIDENT: Tank Bump								
B-1-a	102AW-02-TEMP02	DST tank vapors/aerosols	Release of radioactive aerosols from Tank 241-AW-102 due to tank bump	High heat waste combined with loss of ventilation contributes to tank bump	F2	S2	D01	18A
HAZARDOUS CONDITIONS								
B-1-a	102AW-09-TEMP01	DST tank vapors/aerosols	Release of radioactive aerosols from Tank 241-AW-102 atmosphere due to tank bump	High heat waste plus loss of cooling and/or mixing pump (not yet installed) operation	F2	S2	D01	18AX

Table D3.3-2. Analyzed Accidents and the Represented Hazardous Conditions.[1] (68 sheets)

BIN	ID	Material at Risk	Hazardous Condition	Cause	Freq NC	Safety Cons NC	Cause Grp	Rep Acc
B-1-a	114SX-05.b.2	Radioactive aerosols contained in the tank headspace and some tank waste material (this tank has a dry crust which may be composed of easily disturbed dusty material)	Release of radioactive aerosols from Tank 241-SX-114 head space to atmosphere due to sudden flashing of water added to tank for cooling	Flashing (adding cold liquid to hot tank contents)	F0	S2	D01	18AX
B-1-a	XS-26-TEMP01	DST tank vapors/aerosols	Release of radioactive aerosols from Tank 241-AW-102 due to tank bump	High heat waste plus loss of cooling contributes to tank bump	F2	S2	D01	18AX
			ANALYZED ACCIDENT: Unfiltered Release					
B-1-a	114SX-04.c.2.a	Radioactive aerosols contained in the tank headspace	Release of radioactive aerosols from Tank 241-SX-114 head space to atmosphere due to exhauster HEPA filter seal failure	HEPA filter seal failure	F3	S2	D07	18B
			HAZARDOUS CONDITIONS					
B-1-a	106C-11E	Tank atmosphere	Release of unfiltered tank atmosphere from Tank 241-C-106 due to damaged ductwork	Damage to ventilation ductwork upstream of filters	F3	S2	D07	18BX
B-1-a	106C-11L	Tank atmosphere, residual filter surface contamination	Release of radioactive and/or hazardous material from Tank 241-C-106, through HEPA filter path, due to human error in installation of filter	Improper installation of HEPAs	F3	S2	E07	18BX
B-1-a	114SX-04.b.1.b.1b	Radioactive aerosols located in tank headspace	Release of radioactive aerosols from Tank 241-SX-114 head space to atmosphere due to failure of exhaust ducting from seismic event (mechanical disruption)	Ducting failure from seismic activity	F1	S2	D18	18BX
B-1-a	114SX-04.c.1	Radioactive aerosols contained in tank headspace	Release or radioactive aerosols from Tank 241-SX-114 head space to atmosphere due to mechanical failure of exhauster HEPA filter	Plenum structure failure pierces filter	F2	S2	D07	18BX

Table D3.3-2. Analyzed Accidents and the Represented Hazardous Conditions.[1] (68 sheets)

BIN	ID	Material at Risk	Hazardous Condition	Cause	Freq NC	Safety Cons NC	Cause Grp	Rep Acc
B-1-a	114SX-04.c.2.b	Radioactive aerosols contained in the tank headspace	Release of radioactive aerosols from Tank 241-SX-114 head space to atmosphere due to exhauster defective HEPA filter	Defective HEPA filter	F3	S2	D07	18BX
B-1-a	114SX-04.c.2.d	Radioactive aerosols contained in the tank headspace	Release of radioactive aerosols from Tank 241-SX-114 head space to atmosphere due to exhauster HEPA filter installation errors	Improper installation (human error)	F2	S2	E07	18BX
B-1-a	CRN-09-I	Residual materials in the ventilation ductwork or ventilation filters	Release of radioactive and/or toxic materials from ventilation system due to damage caused by crane operation	Human error in positioning crane load	F3	S2	E26	18BX
B-1-a	CRN-10-I	Residual materials in the ventilation ductwork or ventilation filters	Release of radioactive and/or toxic materials from ventilation system due to damage caused by crane operation	Mechanical failure in positioning crane load	F2	S2	D26	18BX
ANALYZED ACCIDENT: Subsurface Leak Resulting in Pool								
B-3-b	XS-07-FLOW02	Liquid radioactive waste transferred out of DCRT	Release of radioactive waste to soil from transfer piping out of 244-TX DCRT due to leak in primary pipe and encasement	Corrosion of inner and outer pipe	F3	S2	D16	21A
B-3-b	XS-07-FLOW06	Liquid radioactive waste transferred out of DCRT	Release of radioactive waste to soil from transfer pipe out of 244-TX-DCRT due to leak in primary pipe and encasement	Water hammer causes failure of primary pipe and encasement	F3	S2	D17	21B
HAZARDOUS CONDITIONS								
C-2-b	CP-GRT-02	Liquid waste being transferred	Release of radioactive or toxic material to soil surface (pool) from transfer line due to puncture of line during transfer	Human error AND Mechanical failure of push pipe integrity inside the transfer line	F1	S3	D22	21X
C-2-b	CP-SSP-01	Liquid waste being transferred	Release of radioactive or toxic material to soil surface (pool) from transfer line due to puncture of line during transfer	Human error caused puncture to transfer line during push operations.	F1	S3	D22	21X

Table D3.3-2. Analyzed Accidents and the Represented Hazardous Conditions.[1] (68 sheets)

BIN	ID	Material at Risk	Hazardous Condition	Cause	Freq NC	Safety Cons NC	Cause Grp	Rep Acc
C-2-b	CP-SSP-16	Liquid waste being transferred	Release of radioactive or toxic material to soil surface (pool) from transfer line due to puncture of line during transfer	Human error AND Mechanical failure of push pipe integrity inside the transfer line	F1	S3	D22	21X
B-2-b	102AW-01-FLOW02	Liquid radioactive waste being transferred to DST	Release of radioactive waste to soil from transfer piping which runs to Tank 241-AW-102 due to leak from primary pipe and encasement	Excavation accident fails primary pipe and encasement	F3	S2	D22	21X
B-3-b	102AW-01-FLOW03	Liquid radioactive waste being transferred to DST	Release of radioactive waste to soil from transfer pipe to Tank 241-AW-102 due to leak of radioactive waste from primary pipe and encasement	Corrosion of inner and outer pipe cause failure of primary pipe and encasement	F3	S2	D16	21X
B-3-b	102AW-01-FLOW04	Liquid radioactive waste being transferred to DST	Release of radioactive waste to soil from transfer pipe to Tank 241-AW-102 due to leak of radioactive waste from primary pipe and encasement	High structural loading from traffic or cranes fails primary pipe and encasement	F3	S2	D10	21X
B-3-b	102AW-01-FLOW05	Liquid radioactive waste being transferred to DST	Release of radioactive waste to soil from transfer piping to Tank 241-AW-102 due to leak from primary pipe and encasement	Seismic event fails primary pipe and encasement	F2	S2	D18	21X
B-3-b	102AW-01-FLOW06	Liquid radioactive waste being transferred to DST	Release of radioactive waste to soil from transfer pipe to Tank 241-AW-102 due to leak of radioactive waste from primary pipe and encasement	Undermining due to leak of nearby pipes cause failure of primary pipe and encasement	F3	S2	D12	21X
B-3-b	102AW-01-FLOW07	Liquid radioactive waste being transferred to DST	Release of radioactive waste to soil from transfer pipe to Tank 241-AW-102 due to leak of radioactive waste from primary pipe and encasement	Water hammer cause failure of primary pipe and encasement	F3	S2	D17	21X
C-2-b	CP-MSP-01	Liquid waste being transferred	Release of radioactive or toxic material to soil surface (pool) from transfer line due to puncture of line during transfer	Human error caused puncture to transfer line during push operations	F1	S2	D22	21X
B-2-b	CRN-03-IB	Contents of facility	Release of radioactive and/or toxic materials from facility due to MISF containment collapse	Human error results in excessive weight on top of containment	F3	S2	E10	21X

Table D3.3-2. Analyzed Accidents and the Represented Hazardous Conditions.[1] (68 sheets)

BIN	ID	Material at Risk	Hazardous Condition	Cause	Freq NC	Safety Cons NC	Cause Grp	Rep Acc
B-2-b	CRN-04-IB	Contents of facility	Release of radioactive and/or toxic materials from facility due to MISF containment collapse	Crane or rigging failures drop load resulting in large impact to top of containment	F2	S2	D10	21X
B-2-b	CRN-21-IB	Contents of facility	Release of radioactive or toxic materials from aboveground facility bottom due to loss of vertical load control, dropping crane load into facility (surface pool)	Human error: improper load assembly, rigging, positioning error	F3	S2	E10	21X
B-2-b	CRN-22-IB	Contents of facility	Release of radioactive or toxic materials from aboveground facility bottom due to loss of vertical load control, dropping crane load into facility (surface pool)	Mechanical failure: corrosion, faulty materials, hydraulics	F2	S2	D10	21X
C-2-b	W058-INTEG01a	Amount of slurry transferred (20,000 to 1,000,000 gallons)	Release of radioactive slurry to the soil surface from the underground piping between the SY-A or SY-B valve pit and a diversion box due to piping system leak	Failure of primary and encasement piping due to corrosion plus mitigative features failure	F2	S2	D12	21X
C-2-b	W058-INTEG01b	Amount of slurry transferred (20,000 to 1,000,000 gallons)	Release of radioactive slurry to the soil surface from the underground piping between the SY-A or SY-B valve pit and a diversion box due to piping system leak	Failure of primary and encasement piping due to unrecognized material flaw plus mitigative features failure	F2	S2	D12	21X
C-2-b	W058-INTEG03a	Amount of slurry transferred (20,000 to 1,000,000 gallons)	Release of radioactive slurry to the soil surface from the underground piping between the SY-A or SY-B valve pit and a diversion box due to piping system leak	Failure of primary and encasement piping due to external event (airplane crash, volcanism, etc)	F2	S2	D05	21X
C-2-b	W058-INTEG07a	Amount of slurry transferred (20,000 to 1,000,000 gallons)	Release of radioactive slurry to the soil surface from the underground piping between the SY-A or SY-B valve pit and a diversion box due to piping system leak	Failure of primary and encasement piping due to external event (undermining from broken fluid transfer lines in vicinity) plus mitigative features failure	F3	S2	D12	21X

Table D3.3-2. Analyzed Accidents and the Represented Hazardous Conditions.[1] (68 sheets)

BIN	ID	Material at Risk	Hazardous Condition	Cause	Freq NC	Safety Cons NC	Cause Grp	Rep Acc
C-2-b	W058-INTEG09a	Amount of slurry transferred (20,000 to 1,000,000 gallons)	Release of radioactive slurry to the soil surface from the underground piping between the SY-A or SY-B valve pit and a diversion box due to piping system leak	Failure of primary and encasement piping due to freezing	F1	S2	D24	21X
C-2-b	W058-INTEG11a	Amount of slurry transferred (20,000 to 1,000,000 gallons)	Release of radioactive slurry to the soil surface from the underground piping between the SY-A or SY-B valve pit and a diversion box due to piping system leak	Failure of primary and encasement piping due to seismic event plus mitigative features failure	F1	S2	D18	21X
C-2-b	W058-INTEG13a	Amount of supernate transferred (20,000 to 1,000,000 gallons)	Release of radioactive supernate to the soil surface from the underground piping between the SY-A or SY-B valve pit and a diversion box due to piping system leak	Failure of primary and encasement piping due to corrosion plus mitigative features failure	F2	S2	D06	21X
C-2-b	W058-INTEG13b	Amount of supernate transferred (20,000 to 1,000,000 gallons)	Release of radioactive supernate to the soil surface from the underground piping between the SY-A or SY-B valve pit and a diversion box due to piping system leak	Failure of primary and encasement piping due to unrecognized material flaw plus mitigative features failure	F2	S2	D12	21X
C-2-b	W058-INTEG14a	Amount of supernate transferred (20,000 to 1,000,000 gallons)	Release of radioactive supernate to the soil surface from the underground piping between the SY-A or SY-B valve pit and a diversion box due to piping system leak	Failure of primary and encasement piping due to external event (airplane crash, volcanism, etc) plus mitigative features failure	F2	S2	D05	21X
C-2-b	W058-INTEG18a	Amount of supernate transferred (20,000 to 1,000,000 gallons)	Release of radioactive supernate to the soil surface from the underground piping between the SY-A or SY-B valve pit and a diversion box due to piping system leak	Failure of primary and encasement piping due to external event (undermining from broken fluid transfer lines in vicinity) plus mitigative features failure	F2	S2	D12	21X
C-2-b	W058-INTEG20a	Amount of supernate transferred (20,000 to 1,000,000 gallons)	Release of radioactive supernate to the soil surface from the underground piping between the SY-A or SY-B valve pit and a diversion box due to piping system leak	Failure of primary and encasement piping due to freezing	F1	S2	D24	21X

Table D3.3-2. Analyzed Accidents and the Represented Hazardous Conditions.[1] (68 sheets)

BIN	ID	Material at Risk	Hazardous Condition	Cause	Freq NC	Safety Cons NC	Cause Grp	Rep Acc
C-2-b	W058-INTEG22	Amount of supernate transferred (20,000 to 1,000,000 gallons)	Release of radioactive supernate to the soil surface from the underground piping between the SY-A or SY-B valve pit and a diversion box due to piping system leak	Failure of primary and encasement piping due to seismic event plus mitigative features failure	F1	S2	D18	21X
B-3-b	XS-01-PRES01	Liquid radioactive waste in saltwell or PFP transferred to DCRT	Release of liquid radioactive waste from damaged transfer piping to 244-TX DCRT due to over pressure (pool)	Use of wrong size pump and closed valve causes over pressure and subsequent pipe failure	F2	S2	E13	21X
B-3-b	XS-02-FLOW05	PFP waste being transferred to DCRT	Release of liquid radioactive waste to the soil from PFP transfer piping due to pipe break	Pipe break from various causes	F3	S2	D12	21X
B-3-b	XS-06-FLOW05	Radioactive liquid waste transferred from DCRT	Release of waste from transfer pipe out of 244-TX-DCRT to the soil due to flow path to soil	Concurrent failure of transfer piping and encasement	F2	S2	D12	21X
B-2-b	XS-07-FLOW01	Liquid radioactive waste transferred out of DCRT	Release of radioactive waste to soil from transfer piping out of 244-TX DCRT due to leak in primary pipe and encasement	Excavation accident fails primary pipe and encasement	F3	S2	D22	21X
B-3-b	XS-07-FLOW03	Liquid radioactive waste being transferred out of DCRT	Release of radioactive waste to soil from transfer pipe out of 244-TX DCRT due to leak in primary pipe and encasement	High structural loading from traffic or cranes cause failure of primary pipe and encasement	F3	S2	D10	21X
B-3-b	XS-07-FLOW04	Liquid radioactive waste being transferred out of DCRT	Release of radioactive waste to soil from transfer piping of 244-TX-DCRT due to leak in primary pipe and encasement	Seismic event fails primary pipe and encasement	F2	S2	D18	21X
B-3-b	XS-07-FLOW05	Liquid radioactive waste being transferred out of DCRT	Release of radioactive waste to soil from transfer pipe out of 244-TX DCRT due to leak in primary pipe and encasement	Undermining due to leak of nearby pipes cause failure of primary pipe and encasement	F3	S2	D12	21X
B-3-b	XS-52-FLOW01	Liquid radioactive waste transferred to DST	Release of radioactive waste to surface from transfer piping to Tank 244-CR-003 due to leak (pool)	Failure of pipe from various causes	F2	S2	D12	21X

Table D3.3-2. Analyzed Accidents and the Represented Hazardous Conditions.[1] (68 sheets)

BIN	ID	Material at Risk	Hazardous Condition	Cause	Freq NC	Safety Cons NC	Cause Grp	Rep Acc
ANALYZED ACCIDENT: Evaporator Dump								
C-1-a	102AW-02-PRES 102AW-02-TEMP	DCRT tank vapor/aerosols	Release of radioactive aerosols from Tank 241-AW-102 due to pressurization	Evaporator dump when intrusive activity is occurring which causes pressurization	F3	S2	D01	22
HAZARDOUS CONDITIONS								
C-1-a	102AW-02-PRES08	DST tank vapor/aerosols	Release of radioactive aerosols from Tank 241-AW-102 due to positive pressure	Evaporator dump of hot liquid generates aerosols and pressurizes the tank	F3	S2	D01	22X
B-1-a	102AW-02-PRES09	DST tank atmosphere	Release of radioactive aerosols from head space of Tank 241-AW-102 due to positive pressure (lower energy than tank bump)	Loss of fan with airlift circulators running, generating aerosols and pressurizing the tank	F3	S2	D07	22X
C-1-a	102AW-09-TEMP	DST pump pit vapor/aerosols	Release of aerosols from Tank 241-AW-102 vapor space due to pressurization	Transfer of hot solution from facility, generates aerosols and pressurizes the tank	F3	S2	D01	22X
B-1-a	102S-04.a3	Gases within the tank waste	Release of radioactive aerosols trapped in gases throughout Tank 241-S-102 waste to the atmosphere due to periodic release of toxic gases (lower energy than tank bump)	Waste growth (bump) due to chemistry within the waste coupled with crust movement	F3	S2	D02	22X
C-1-a	244AR-03.a.05	Radioactive material contained in the tank	Release of radioactive aerosols from tanks headspace due to ventilation system blockage	Ventilation and risers blocked while jetting occurring	F2	S2	D07	22X
B-1-a	244AR-03.a.08	Radioactive material contained in tank	Release of radioactive aerosols created by boiling waste to the cell atmosphere	Steam being supplied to tank heating/cooling coils	F3	S2	D01	22X
B-1-a	I-242A-2-FLW-A	Aerosols from receiver tank	Release of aerosols to the atmosphere through unsealed cracks in the cover blocks due to over pressurization of the receiver tank and possible structural damage to the tank	Human error - pump is run at maximum speed	F3	S2	E15	22X

Table D3.3-2. Analyzed Accidents and the Represented Hazardous Conditions.[1] (68 sheets)

BIN	ID	Material at Risk	Hazardous Condition	Cause	Freq NC	Safety Cons NC	Cause Grp	Rep Acc
C-1-a	I-242A-2-FLW-B	Aerosols from receiver tank	Release of aerosols to the atmosphere through 12 inch opening in inlet station due to over pressurization of the receiver tank and possible structural damage to the tank	Human error - pump is run at maximum speed	F3	S2	E15	22X
C-1-a	I-242A-2-VSC-A	Aerosols from receiver tank	Release of aerosols in receiver tank due to tank burp from over concentration, potential to generate conditions similar to Tank 241-SY-101, "Tank Burp" due to hydrogen being trapped in thick solution (lower energy than tank bump)	Human error - over concentration of slurry at evaporator	F2	S2	E03	22X
B-1-a	I-242A-3-FLW-A	Aerosols from Tank 241-AW-102	Release of aerosols to the atmosphere through unsealed cracks in the cover blocks due to over pressurization of the feed tank and possible structural damage to the tank	Uncontrolled pot dump at evaporator (loss of electricity or air)	F3	S2	D01	22X
C-1-a	I-242A-3-FLW-B	Aerosols from Tank 241-AW-102	Release of aerosols to the atmosphere through 12 inch opening in inlet station due to over pressurization of the feed tank and possible structural damage to the tank	Uncontrolled pot dump at evaporator (loss of electricity or air)	F3	S2	D01	22X
C-1-a	I-242A-7-FLW-A	Aerosols from the head space of Tank 241-AW-102	Release of aerosols through the risers due to loss of instrument air which causes an uncontrolled evaporator dump and failure to detect changes in feed tank pressure	Compressor fails and 241-AW Tank Farm air supplied from 242-A	F1	S2	D05	22X
C-1-a	I-242A-7-FLW-B	Aerosols from the head space of Tank 241-AW-102	Release of aerosols through the risers due to loss of instrument air which causes an uncontrolled evaporator dump and failure to detect changes in feed tank pressure	Valve inadvertently closed, 241-AW Tank Farm air supplied from 242-A	F1	S2	E05	22X
C-1-a	I-242A-7-FLW-C	Aerosols from the head space of Tank 241-AW-102	Release of aerosols through the risers due to loss of instrument air which causes an uncontrolled evaporator dump and failure to detect changes in feed tank pressure	Filter plugged, 241-AW Tank Farm air supplied from 242-A	F1	S2	D05	22X

Table D3.3-2. Analyzed Accidents and the Represented Hazardous Conditions.[1] (68 sheets)

BIN	ID	Material at Risk	Hazardous Condition	Cause	Freq NC	Safety Cons NC	Cause Grp	Rep Acc
B-1-a	ITK-05	Tank inventory	Release of radioactive and/or hazardous material from point of in-tank access (non-fire, non-explosion) due to intrusive activity	Tank burps from intrusive activity	F2	S2	E04	22X
ANALYZED ACCIDENT: Mixing of Incompatible Material - Toxic Vapor Generation								
C-1-a	XS-26-PRES XS-26-TEMP	DST vapor/aerosols	Release of toxic vapors from Tank 241-SY-102 due to chemical reaction	Mistransfer of incompatible waste causes chemical reaction	F3	S2	E06	23
HAZARDOUS CONDITIONS								
C-1-a	102AW-02-LEVE01	DST tank vapor/aerosols	Release of toxic gases from Tank 241-AW-102 due to accumulations of gases	Slurry growth	F1	S2	D02	23X
C-1-a	102AW-02-PRES02	DST vapor/aerosols	Release of toxic gases from Tank 241-AW-102 due to chemical reaction in waste	Transfer of incompatible waste to Tank 241-AW-102 causes tank gas accumulation	F3	S2	E01	23X
B-1-a	ITK-05-I	Gases or aerosols generated inside MISF from gas release	Release of radioactive and/or hazardous material from point of in-facility access due to gas release from in-facility waste during intrusive activity (non-fire, non-explosion)	Gas release from in-facility waste during intrusive activity	F2	S2	E04	23X
C-1-a	XS-03-PRES02 XS-21-PRES (244-S-DCRT)	DCRT tank contents	Release of toxic vapors from 244-TX DCRT due to decreased ability to keep vapors in solution (fan on)	Heating of DCRT or chemical adjustment	F3	S2	D01	23X
B-1-a	XS-03-PRES05	DCRT tank vapor/aerosols	Release of toxic vapors from DCRT due to increased concentrations in DCRT atmosphere	Transfer of steam from PFP causing evolution of toxic gases due to heating tank	F2	S2	D01	23X
C-1-a	XS-03-TEMP02	DCRT vapor/aerosols	Release of toxic vapor from DCRT due to chemical reaction	Chemical reaction in DCRT toxic vapor	F2	S2	D01	23X
C-1-a	XS-13-PRES03	Catch tank vapor/aerosols	Release of toxic vapors due to chemical reaction from 241-U-301B	Draining of incompatible chemicals to catch tank	F2	S2	D01	23X

Table D3.3-2. Analyzed Accidents and the Represented Hazardous Conditions.[1] (68 sheets)

BIN	ID	Material at Risk	Hazardous Condition	Cause	Freq NC	Safety Cons NC	Cause Grp	Rep Acc
C-1-a	XS-20-FLOW04	DCRT vapor/aerosols	Release of toxic vapors from 244-TX DCRT due to chemical reaction with incompatible material in 244-S DCRT	Mixing contents of 244-TX and 244-S due to misrouting causes chemical reaction	F2	S2	E06	23X
ANALYZED ACCIDENT: Leak from Rail Car/Tank Trailer								
B-2-b	204AR-01H	20,000 gallons of liquid radioactive waste from the rail car	Release of airborne and waterborne contaminates outside building on track spur, and potential contamination in unloader room from rail car due to spilling rail car contents	Rail car rupture due to collision with other or a derailment	F2	S2	D25	25
HAZARDOUS CONDITIONS								
C-2-b	204AR-01I	20,000 gallons of liquid radioactive waste from the rail car	Release of airborne and waterborne contaminates outside building on track spur, and potential contamination in unloader room from rail car due to leak	Rail car leak due to tanker corrosion or other degradation	F2	S2	D12	25X
B-2-b	204AR-02A	5000 gallons of liquid radioactive waste from trailer	Release of liquid radioactive material and toxic chemicals outside and inside the 204AR building from the trailer due to collision which causes a spill	Tank trailer damage due to running into the building and causing the tank contents to spill	F2	S2	D25	25X
C-2-b	204AR-02B	5000 gallons of liquid radioactive waste from trailer	Release of radioactive material and toxic chemicals from trailer due to structural degradation of trailer	Tank trailer damaged due to corrosion or other degradation	F2	S2	D12	25X
C-2-b	204AR-09B	5000 - 20,000 of liquid radioactive waste from rail car or trailer	Release of airborne and radiation contamination in the unloader room from trailer or rail car leak due to high level in sump pit	Catastrophic leak from a large liquid source such as a trailer or rail car	F2	S2	D12	25X
C-2-b	204AR-09C	5000 of liquid radioactive waste	Release of airborne and radiation contamination in the unloader room from rail car due to gross overfilling of catch tank	Gross overfilling of catch tank either from large source such as the trailers or rail cars or continual pumping of transfer water through a leaky pipe	F2	S2	D06	25X

Table D3.3-2. Analyzed Accidents and the Represented Hazardous Conditions.[1] (68 sheets)

BIN	ID	Material at Risk	Hazardous Condition	Cause	Freq NC	Safety Cons NC	Cause Grp	Rep Acc
C-2-b	204AR-090	5000 - 20,000 of liquid radioactive waste from rail car or trailer	Release of radioactive liquid waste in the unloader room from the rail car or trailer due to failed rail car or trailer	Failed tank car or rail car (initially full of liquid waste) overflowing the catch tank and sump pit	F2	S2	D12	25X
			ANALYZED ACCIDENT: Surface Leak Resulting in Pool					
C-2-b	W058-PRES01	Amount of slurry transferred (20,000 to 1,000,000 gallons)	Release of radioactive slurry to the soil surface from overflow in the SY-A or SY-B valve pit due to piping system leak (pool)	Water hammer plus mitigative features failure	F3	S2	D17	26
			HAZARDOUS CONDITIONS					
C-2-b	102AW-01-FLOW10	Liquid radioactive waste involved in transfer	Release of liquid radioactive waste from Tank 241-AW-102 due to overflow	Misrouting of waste from reverse flow caused by the combination of an incorrectly wired pump and a full transfer pipe	F2	S2	E06	26X
C-2-b	102AW-01-FLOW11	Liquid radioactive waste involved in transfer	Release of liquid radioactive waste to the ground surface from Tank 241-AW-102 due to overflow of Tank 241-AW-102 or underground structure	Misrouting to destination other than intended causes overflow	F3	S2	E06	26X
C-2-b	102AW-01-TEMP01	Liquid radioactive waste being transferred to DST	Release of liquid radioactive waste from transfer pipe to Tank 241-AW-102 due to leaks overflowing from underground structure	Piping leak due to corrosion caused by transferring high temperature waste	F2	S2	D01	26X
C-2-b	102AW-01-TEMP01A	Liquid radioactive waste being transferred to DST	Release of liquid waste from transfer pipe to Tank 241-AW-102 due to leaks overflowing from underground structure	Piping leak due to thermal stress of transferring hot solution in cold pipe	F2	S2	D01	26X
C-2-b	102AW-01-TEMP02	Liquid radioactive waste being transferred to DST	Release of liquid radioactive waste from transfer pipe to Tank 241-AW-102 due to leaks overflowing from underground structure	Piping leak due to exceeding the design temperature of the pipe by transferring high temperature waste	F2	S2	D01	26X

Table D3.3-2. Analyzed Accidents and the Represented Hazardous Conditions.[1] (68 sheets)

BIN	ID	Material at Risk	Hazardous Condition	Cause	Freq NC	Safety Cons NC	Cause Grp	Rep Acc
C-2-b	102AW-02-LEVE03	DST contents	Release of radioactive liquid from Tank 241-AW-102 due to overfilling	Failure to stop transfer causes overfilling of tank	F3	S2	E06	26X
C-2-b	102AW-02-LEVE04	DST contents	Release of radioactive liquid from Tank 241-AW-102 due to overfilling	Misrouting causes overfilling of tank	F3	S2	E06	26X
C-2-b	102AW-02-LEVE05	DST contents	Release of radioactive liquid from Tank 241-AW-102 to the soil column due to gross overfilling of tank (Pool)	Misrouting causes overfilling of tank	F3	S2	E06	26X
C-2-b	102AW-13-FLOW02	Liquid waste being transferred from DST	Release of radioactive liquid from transfer piping out of Tank 241-AW-102 due to backflow of radioactive material into flush pit and subsequent overflow (Pool)	Multiple valving errors and failure of backflow prevention devices dumps to pit as designed	F3	S2	E06	26X
C-2-b	102S-01.a1	Radioactive/hazardous material contained in pumpable liquids from various S Farm Tanks.	Radioactive/hazardous liquid released to soil surface from tank diversion box/access pit to the ground surface due to misrouting a transfer.	Human error (jumper/blank installation) + Mistransfer to Tank 241-S-102 (450-600 Kgal) overfills tank	F2	S2	E06	26X
C-2-b	102S-01.b2	Radioactive/hazardous material contained in pumpable liquids from Tank 241-S-102.	Radioactive liquid released to soil surface from Tank 241-S-102 pump pit due to leak in jumpers connecting tank transfer lines SL-140, SN-242 during saltwell pumping.	Jumper failure + Drain plugged	F2	S2	D12	26X
B-2-b	114SX-02.b	Radioactive material contained in pumpable liquid	Radioactive liquid released from tank pump pit to the ground surface due to inadvertent pumping activity (pool)	Human error (not normal activity)	F1	S2	E06	26X
C-2-b	204AR-09A	Up to 20,000 of liquid radioactive waste from rail car	Release of airborne and waterborne contamination from the sump pit due to ruptured piping during transfer.	Rupture of transfer piping section above the sump pit	F2	S2	D12	26X
C-1-a	244AR-02.a.07	Radioactive material contained in vessel	Release of radioactive aerosols from vessel headspace to building atmosphere with eventual release outside facility due to overfilling of sump causing tank failure	Rain or snow water intrusion	F1	S2	D01	26X

Table D3.3-2. Analyzed Accidents and the Represented Hazardous Conditions.[1] (68 sheets)

BIN	ID	Material at Risk	Hazardous Condition	Cause	Freq NC	Safety Cons NC	Cause Grp	Rep Acc
C-2-b	CCF-07	Overflow of tank contents	Release of radioactive and hazardous materials from tank due to overfill	Disabled or unavailable staff to terminate transfer	F3	S2	E06	26X
C-2-b	COB-04	Transfer inventory	Release of radioactive and/or hazardous material from COB lid due to overflow of COB during transfer (pool)	Leak into COB with floor drain plugged, leak detector failed	F3	S2	D12	26X
C-2-b	COB-08	Transfer inventory	Release of radioactive and/or hazardous material from COB due to over filling of COB (pool)	Transfer pipe or riser rupture, backfilling lower part of COB then filling COB via the floor drain	F3	S2	D12	26X
C-2-b	CRN-11-IC	Contents of facility	Release of radioactive and/or toxic materials from facility due to containment top collapse damage by boom failure (pool)	Human error: improper load assembly, rigging, crane overloaded	F3	S2	E10	26X
C-2-b	CRN-12-IC	Contents of facility	Release of radioactive and/or toxic materials from facility due to containment top collapse by boom failure (pool)	Mechanical failure: corrosion, faulty materials	F2	S2	D10	26X
C-3-b	EE-11	Contents of affected tank	Release of radioactive and hazardous materials from tank due to overfilling	Water line breaks and overfills tank	F2	S2	D12	26X
C-2-b	I-242A-6-FLW-B	Aerosols and liquid waste from Tank 241-AW-102 diluted with raw water from the evaporator	Release of diluted high level tank waste from Feed Tank 241-AW-102 caused by overfilling Tank 241-AW-102 and annulus, aggravated by an uncontrolled evaporator dump when a raw water leak occurs in evaporator condenser room	Rupture of raw water line in condenser/pump room	F3	S2	D12	26X
C-2-b	I-242S-2-FLW-A	Contaminated fire water and other liquid waste in Tank 241-SY-102	Release of tank waste diluted with contaminated fire water to the soil due to flooding the pump room from a fire main break and pumping the water to Tank 241-SY-102 which overfills the tank and floods pit through risers	Break in fire main	F1	S2	D12	26X

Table D3.3-2. Analyzed Accidents and the Represented Hazardous Conditions.[1] (68 sheets)

BIN	ID	Material at Risk	Hazardous Condition	Cause	Freq NC	Safety Cons NC	Cause Grp	Rep Acc
C-2-b	I-242S-2-FLW-E	High level waste from tank farms	Release of high level waste to the ground outside the 242-S building due to unmitigated reverse flow to the pump room from Tank 241-SY-102	Human error - incorrect valve line up	F2	S2	E06	26X
C-2-b	I-242S-4-FLW-C	High level waste from tank farms	Release of high level waste to the ground outside the 242-S building due to unmitigated reverse flow to the condenser room	Human error - incorrect valve line up	F2	S2	E06	26X
C-2-b	I-242S-4-FLW-D	Contaminated fire water and other waste in Tank 241-SY-102	Release of tank waste diluted with contaminated water to the soil due to flooding the condenser room which is pumped to Tank 241-SY-102 and overfills the tank and floods pit through risers	Break in fire main	F1	S2	D12	26X
C-2-b	I-PUREX-4-FLW-B	High level tank waste diluted with flush water	Release (ground surface) of high level tank waste diluted with flush water from the receiver tank due to overfilling from sending excess water	Block valve on flush water inadvertently left opened or leaking	F3	S2	D06	26X
C-2-b	I-UPLANT-1-LEK-B	Contaminated rain water from U Plant stack	Release of low level waste to the ground at the rupture of the line	Inadvertent excavation of line	F1	S2	D22	26X
B-2-b	OGT-EXT3-01B	DST & SST tank inventory	Release of radioactive or hazardous material from the primary pipe due to leak caused by truck crash into piping system	Human error, line struck by truck	F2	S2	E25	26X
C-2-b	OGT-FLOW1-02	DST & SST Tank inventory	Release of radioactive or hazardous material from pit overflow due to primary pipe leak caused by over-rated pump	Incorrect pump installed creates excessive flow and pressure on OGT system eroding EPDM pipe causing leak to secondary pipe with drain in pit plugged	F2	S2	E13	26X

Table D3.3-2. Analyzed Accidents and the Represented Hazardous Conditions.[1] (68 sheets)

BIN	ID	Material at Risk	Hazardous Condition	Cause	Freq NC	Safety Cons NC	Cause Grp	Rep Acc
B-2-b	OGT-FLOW1-03B	DST & SST tank inventory	Release of radioactive or hazardous material from the primary pipe due to misdirected flow of waste through flush line	JR-1 (3-way valve) mispositioned to flush, two check valves fail, flush disconnect fails (check valve), and reverse flow to water truck, drum or onto ground	F1	S2	E06	26X
B-2-b	OGT-FLOW1-04	DST & SST Tank Inventory	Release of radioactive or hazardous material from the primary pipe due to valve failure resulting in misdirected flow of waste through flush line to flush water supply truck	JR-1 leak (bleed-by), two check valves fail, and flush disconnect fails and pump started causing reverse flow to flush water truck tank	F1	S2	D06	26X
C-2-b	OGT-FLOW1-06	DST & SST tank inventory	Release of radioactive or hazardous material from the DCRT due to overflow	Exceed volume available in DCRT/insufficient volume available, condition goes unnoticed until overflow occurs	F2	S2	E06	26X
B-2-b	OGT-FLOW2-01B	DST & SST Tank Inventory	Release of radioactive or hazardous material from the primary pipe due to leak caused by incorrect pump installed	Incorrect pump installed creates excessive flow and isolation valve closed on secondary pipe, erosion of EPDM and pressurization of secondary pipe causing leaks from flanges gasket within concrete shield	F2	S2	E13	26X
B-2-b	OGT-FLOW2-03B	DST & SST tank inventory	Release of radioactive or hazardous material from the primary pipe due leak caused by incorrect pump installed	Installation of incorrect pump, failure of inner pipe and isolation valves closed on secondary pipe drains causing leak from failed welds on flange within the concrete shield	F1	S2	E13	26X

Table D3.3-2. Analyzed Accidents and the Represented Hazardous Conditions.[1] (68 sheets)

BIN	ID	Material at Risk	Hazardous Condition	Cause	Freq NC	Safety Cons NC	Cause Grp	Rep Acc
C-2-b	OGT-PRES1-01	DST & SST tank inventory	Release of radioactive or hazardous material from overflow of pit due to leak caused by high pressure	Heat up of hydro test by heat tape or high ambient temperature, high pressure results from captive fluid heat up, inner pipe damaged, leaks to secondary pipe and drains back to pits and insufficient drainage in pit	F1	S2	D05	26X
C-2-b	OGT-REAC1-01	DST & SST tank inventory	Release of radioactive or hazardous material from overflow of pit due to primary pipe leak cause by chemical reaction	Pumping from multiple tanks to single OGT, potential for adverse chemical reactions in pipeline damaging inner pipe, leaks to secondary pipe and drains back to pits and insufficient drainage in pit	F1	S2	D01	26X
C-2-b	OGT-TEMP1-03	DST & SST tank inventory	Release of radioactive or hazardous material from overflow of pit due to leak caused by high temperature	High temperature flush water fails inner pipe causing leak to secondary pipe, drain to pit with insufficient drainage in pit	F1	S2	E01	26X
C-2-b	TFS-1	Waste from Tank 241-SY-102	Release of radioactive or hazardous waste liquid from overflow of 244-S vault to the 244-S pump pit due to syphon effect on Tank 241-SY-102 (pump does not overflow)	Human Error - failure to close isolation valve (or valve malfunction) following waste transfer which allows flow to continue (syphon) when pump is stopped	F3	S2	E06	26X
C-2-b	W058-FLOW01	Amount of slurry transferred (20,000 to 1,000,000 gallons)	Release of radioactive slurry to the soil surface from overflow in the SY-A or SY-B valve pit due to piping system leak (pool)	Computer failure or human error causing misrouting of material when flow path is not completely connected plus mitigative features failure	F3	S2	E06	26X

Table D3.3-2. Analyzed Accidents and the Represented Hazardous Conditions.[1] (68 sheets)

BIN	ID	Material at Risk	Hazardous Condition	Cause	Freq NC	Safety Cons NC	Cause Grp	Rep Acc
C-2-b	W058-FLOW03	Amount of slurry transferred (20,000 to 1,000,000 gallons)	Release of radioactive slurry to the soil surface from overflow in the SY-A or SY-B valve pit due to piping system leak (pool)	External leak of valve or valves to the valve pit plus mitigative features failure	F2	S2	D12	26X
C-2-b	W058-FLOW05a	Amount of slurry transferred (20,000 to 1,000,000 gallons)	Release of radioactive slurry to the soil surface from overflow in the SY-A or SY-B valve pit due to piping system leak (pool)	Failure of jumper due to misalignment (human error) plus mitigative features failure	F3	S2	E06	26X
C-2-b	W058-FLOW05b	Amount of slurry transferred (20,000 to 1,000,000 gallons)	Release of radioactive slurry to the soil surface from overflow in the SY-A or SY-B valve pit due to piping system leak (pool)	Failure of jumper due to gasket failure plus mitigative features failure	F2	S2	D12	26X
C-2-b	W058-FLOW05c	Amount of slurry transferred (20,000 to 1,000,000 gallons)	Release of radioactive slurry to the soil surface from overflow in the SY-A or SY-B valve pit due to piping system leak (pool)	Failure of jumper due to corrosion plus mitigative features failure	F2	S2	D12	26X
C-2-b	W058-FLOW07	Amount of supernate transferred (20,000 to 1,000,000 gallons)	Release of radioactive supernate to the soil surface from overflow in the SY-A or SY-B valve pit due to piping system leak (pool)	Computer failure or human error causing misrouting of material when flow path is not completely connected plus mitigative features failure	F3	S2	E06	26X
C-2-b	W058-FLOW09	Amount of supernate transferred (20,000 to 1,000,000 gallons)	Release of radioactive supernate to the soil surface from overflow in the SY-A or SY-B valve pit due to piping system leak (pool)	External leak of valve or valves to the valve pit plus mitigative features failure	F2	S2	D12	26X
C-2-b	W058-FLOW11a	Amount of supernate transferred (20,000 to 1,000,000 gallons)	Release of radioactive supernate to the soil surface from overflow in the SY-A or SY-B valve pit due to piping system leak (pool)	Failure of jumper due to misalignment (human error) plus mitigative features failure	F3	S2	E06	26X
C-2-b	W058-FLOW11b	Amount of supernate transferred (20,000 to 1,000,000 gallons)	Release of radioactive supernate to the soil surface from overflow in the SY-A or SY-B valve pit due to piping system leak (pool)	Failure of jumper due to gasket failure plus mitigative features failure	F2	S2	D12	26X

Table D3.3-2. Analyzed Accidents and the Represented Hazardous Conditions.[1] (68 sheets)

BIN	ID	Material at Risk	Hazardous Condition	Cause	Freq NC	Safety Cons NC	Cause Grp	Rep Acc
C-2-b	W058-FLOW11c	Amount of supernate transferred (20,000 to 1,000,000 gallons)	Release of radioactive supernate to the soil surface from overflow in the SY-A or SY-B valve pit due to piping system leak (pool)	Failure of jumper due to corrosion plus mitigative features failure	F2	S2	D12	26X
C-2-b	W058-FLOW13	Portion of supernate or slurry transferred (20,000 to 1,000,000 gallons) even if the primary line failed catastrophically, it would still provide a flow path; hence, the leak via the test riser would be a side stream	Release of radioactive supernate to the soil surface from overflow in the SY-A or SY-B valve pit due to piping system leak (pool)	Open path for pool leak from test riser	F3	S2	E06	26X
C-2-b	W058-INTEG01c	Amount of slurry transferred (20,000 to 1,000,000 gallons)	Release of radioactive slurry to the soil surface from overflow of a diversion box due to piping system leak	Failure of primary and encasement piping due to corrosion plus mitigative features failure	F2	S2	D12	26X
C-2-b	W058-INTEG01d	Amount of slurry transferred (20,000 to 1,000,000 gallons)	Release of radioactive slurry to the soil surface from overflow of a diversion box due to piping system leak	Failure of primary and encasement piping due to unrecognized material flaw plus mitigative features failure	F2	S2	D12	26X
C-2-b	W058-INTEG03b	Amount of slurry transferred (20,000 to 1,000,000 gallons)	Release of radioactive slurry to the soil surface from overflow of a diversion box due to piping system leak	Failure of primary and encasement piping due to external event (airplane crash, volcanism, etc)	F2	S2	D05	26X
C-2-b	W058-INTEG05a	Amount of slurry transferred (20,000 to 1,000,000 gallons)	Release of radioactive slurry to the soil surface from the underground piping between the SY-A or SY-B valve pit and a diversion box due to piping system leak	Failure of primary and encasement piping due to external event (excavation accident) plus mitigative features failure	F2	S2	D22	26X

Table D3.3-2. Analyzed Accidents and the Represented Hazardous Conditions.[1] (68 sheets)

BIN	ID	Material at Risk	Hazardous Condition	Cause	Freq NC	Safety Cons NC	Cause Grp	Rep Acc
C-2-b	W058-INTEG05b	Amount of slurry transferred (20,000 to 1,000,000 gallons)	Release of radioactive slurry to the soil surface from overflow of a diversion box due to piping system leak	Failure of primary and encasement piping due to external event (excavation accident) plus mitigative features failure	F3	S2	D22	26X
C-2-b	W058-INTEG07b	Amount of slurry transferred (20,000 to 1,000,000 gallons)	Release of radioactive slurry to the soil surface from overflow of a diversion box due to piping system leak	Failure of primary and encasement piping due to external event (undermining from broken fluid transfer lines in vicinity) plus mitigative features failure	F2	S2	D12	26X
C-2-b	W058-INTEG09b	Amount of slurry transferred (20,000 to 1,000,000 gallons)	Release of radioactive slurry to the soil surface from overflow of a diversion box due to piping system leak	Failure of primary and encasement piping due to freezing	F1	S2	D24	26X
C-2-b	W058-INTEG11b	Amount of slurry transferred (20,000 to 1,000,000 gallons)	Release of radioactive slurry to the soil surface from overflow of a diversion box due to piping system leak	Failure of primary and encasement piping due to seismic event plus mitigative features failure	F1	S2	D18	26X
C-2-b	W058-INTEG13c	Amount of supernate transferred (20,000 to 1,000,000 gallons)	Release of radioactive supernate to the soil surface from overflow of a diversion box due to piping system leak	Failure of primary and encasement piping due to corrosion plus mitigative features failure	F2	S2	D06	26X
C-2-b	W058-INTEG13d	Amount of supernate transferred (20,000 to 1,000,000 gallons)	Release of radioactive supernate to the soil surface from overflow of a diversion box due to piping system leak	Failure of primary and encasement piping due to unrecognized material flaw plus mitigative features failure	F2	S2	D12	26X
C-2-b	W058-INTEG14b	Amount of supernate transferred (20,000 to 1,000,000 gallons)	Release of radioactive supernate to the soil surface from overflow of a diversion box due to piping system leak	Failure of primary and encasement piping due to external event (airplane crash, volcanism, etc) plus mitigative features failure	F2	S2	D05	26X

Table D3.3-2. Analyzed Accidents and the Represented Hazardous Conditions.[1] (68 sheets)

BIN	ID	Material at Risk	Hazardous Condition	Cause	Freq NC	Safety Cons NC	Cause Grp	Rep Acc
C-2-b	W058-INTEG16a	Amount of supernate transferred (20,000 to 1,000,000 gallons)	Release of radioactive supernate to the soil surface from the underground piping between the SY-A or SY-B valve pit and a diversion box due to piping system leak	Failure of primary and encasement piping due to external event (excavation accident) plus mitigative features failure	F3	S2	D22	26X
C-2-b	W058-INTEG16b	Amount of supernate transferred (20,000 to 1,000,000 gallons)	Release of radioactive supernate to the soil surface from overflow of a diversion box due to piping system leak	Failure of primary and encasement piping due to external event (excavation accident) plus mitigative features failure	F3	S2	D22	26X
C-2-b	W058-INTEG18b	Amount of supernate transferred (20,000 to 1,000,000 gallons)	Release of radioactive supernate to the soil surface from overflow of a diversion box due to piping system leak	Failure of primary and encasement piping due to external event (undermining from broken fluid transfer lines in vicinity) plus mitigative features failure	F2	S2	D12	26X
C-2-b	W058-INTEG20b	Amount of supernate transferred (20,000 to 1,000,000 gallons)	Release of radioactive supernate to the soil surface from overflow of a diversion box due to piping system leak	Failure of primary and encasement piping due to freezing	F1	S2	D24	26X
C-2-b	W058-INTEG24	Amount of slurry transferred (20,000 to 1,000,000 gallons)	Release of radioactive slurry to the soil surface from overflow in the SY-A or SY-B valve pit due to piping system leak	External event (airplane crash, etc)	F1	S2	D23	26X
C-2-b	W058-INTEG26	Amount of slurry transferred (20,000 to 1,000,000 gallons)	Release of radioactive slurry to the soil surface from overflow in the SY-A or SY-B valve pit due to piping system leak	Seismic event plus mitigative features failure	F1	S2	D18	26X
C-2-b	W058-INTEG28	Amount of supernate transferred (20,000 to 1,000,000 gallons)	Release of radioactive supernate to the soil surface from overflow in the SY-A or SY-B valve pit due to piping system leak	External event (airplane crash, etc)	F1	S2	D23	26X

Table D3.3-2. Analyzed Accidents and the Represented Hazardous Conditions.[1] (68 sheets)

BIN	ID	Material at Risk	Hazardous Condition	Cause	Freq NC	Safety Cons NC	Cause Grp	Rep Acc
C-2-b	W058-INTEG30	Amount of supernate transferred (20,000 to 1,000,000 gallons)	Release of radioactive supernate to the soil surface from overflow in the SY-A or SY-B valve pit due to piping system leak (pool)	Seismic event	F1	S2	D18	26X
C-2-b	W058-PRES03	Amount of supernate transferred (20,000 to 1,000,000 gallons)	Release of radioactive supernate to the soil surface from overflow in the SY-A or SY-B valve pit due to piping system leak (pool)	Water hammer plus mitigative features failure	F3	S2	D17	26X
B-1-a	XS-01-FLOW05	Liquid radioactive waste being transferred to DCRT	Release of radioactive contaminated liquid from transfer piping to 244-TX-DCRT via the raw water system due to reverse flow of liquid waste (pool)	Mis-valving causes mixing of waste into raw water system that causes leak in the flush pit cover block	F2	S2	E06	26X
B-2-b	XS-01-FLOW06	Saltwell liquor being transferred to DCRT	Release of liquid radioactive waste from saltwell pumping transfer piping in DCRT pump pit to surface due to overflow (pool)	Open jumper in single shell tank pump pit leads to overflowing of pump pit	F3	S2	E06	26X
C-2-b	XS-03-TEMP04 XS-21-TEMP (244-S-DCRT)	DCRT contents	Release of liquid radioactive waste from 244 TX DCRT due to overflow	Freezing temperatures causing raw water line break-leak with leakage to tank causes overflow	F3	S2	D24	26X
C-2-b	XS-11-LEVE01	Liquid radioactive waste transferred out of DCRT	Release of radioactive waste from diversion box to surface due to overflow of transfer from 244-TX	Plugged drain and misrouting causes overflow	F3	S2	E06	26X
C-2-b	XS-11-LEVE02	Liquid radioactive waste transferred out of DCRT	Release of radioactive waste from diversion box to surface due to overflow of transfer from 244-TX	Plugged drain and open jumper causes overflow	F3	S2	E06	26X
C-2-b	XS-11-LEVE03	Liquid radioactive waste transferred out of DCRT	Release of radioactive waste from diversion box to surface due to overflow	Plugged drain and piping leak causes overflow	F3	S2	D12	26X
C-2-b	XS-12-FLOW05	Liquid radioactive waste transferred out of DCRT	Release of radioactive waste from diversion box to surface due to overflow of transfer from 244-TX	Backflow from catch tank causes overflow from diversion box	F3	S2	D06	26X

Table D3.3-2. Analyzed Accidents and the Represented Hazardous Conditions.[1] (68 sheets)

BIN	ID	Material at Risk	Hazardous Condition	Cause	Freq NC	Safety Cons NC	Cause Grp	Rep Acc
C-2-b	XS-20-FLOW08	Liquid radioactive waste in catch tank and DCRT	Release of radioactive waste from 244-TX DCRT to surface due to overflow	Transfer of excess waste to 244-TX DCRT due to improper valve lineup causes overflow	F3	S2	E06	26X
C-2-b	XS-20-FLOW09	Liquid radioactive waste in catch tank and DCRT	Release of radioactive waste from 244S DCRT to surface due to overflow	Transfer of waste from 244-TX DCRT due to improper valve lineup causes overflow	F3	S2	E06	26X
C-2-b	XS-35-FLOW02	Liquid radioactive waste from cross-site transfer	Release of radioactive waste to surface from 242-S Evaporator sump due to backflow to and overflow	Human error of leaving open flow path after emptying the sump and backflow and subsequent overflow	F3	S2	E06	26X
C-2-b	XS-37-FLOW01	Liquid waste involved in cross-site transfer	Release of radioactive liquid waste from catch tank to surface due to overfilling (pool)	Leak of transfer piping with drainage to catch tank causes overflow	F3	S2	D12	26X
C-2-b	XS-41A-FLOW01	Liquid radioactive waste from cross-site transfer	Release of radioactive waste from vent station nozzle pit to surface due to overflow	Catastrophic failure of vent piping causes overflow of nozzle pit	F3	S2	D12	26X
C-2-b	XS-41A-FLOW02	Liquid radioactive waste from cross-site transfer	Release of radioactive waste to surface from vent station nozzle pit due to overflow	Vent valve left open or leaking during transfer causes overflow	F3	S2	E06	26X
C-2-b	XS-41B-LEVE03	Liquid radioactive waste in vent station catch tank and waste being transferred	Release of radioactive waste to surface from vent station nozzle pit due to overflow	Failure to empty catch tank, causing overflow of tank and pit due to transfer failure	F3	S2	E06	26X
C-2-b	XS-52-FLOW02	Liquid radioactive waste transfer to DST	Release of radioactive waste from Tank 244-CR-003 to surface due to overflow (pool)	Mis-valving or valve failure during cross-site transfer causes overflow	F3	S2	E06	26X
ANALYZED ACCIDENT: Unplanned Excavation/Drilling in Pond/Crib/Ditch								
C-2-c	CDP-10	Portion of radioactive material present in crib, ditch or pond	Release of radioactive contamination to soil surface from excavation or drilling in cribs, ditches or ponds that disturbs radioactive material	Excavation or drilling	F3	S2	D22	28

Table D3.3-2. Analyzed Accidents and the Represented Hazardous Conditions.[1] (68 sheets)

BIN	ID	Material at Risk	Hazardous Condition	Cause	Freq NC	Safety Cons NC	Cause Grp	Rep Acc
			HAZARDOUS CONDITIONS					
C-1-a	EE-17	Materials in inactive equipment	Radioactive and hazardous material release from inactive equipment due to excavation error	Excavation into abandoned or inactive equipment	F3	S2	D22	28X
			ANALYZED ACCIDENT: Subsurface Leak Remaining Subsurface					
B-3-b	102S-01.b3	Radioactive/hazardous material contained in pumpable liquids from Tank 241-S-102.	Radioactive liquid released to the soil subsurface from leaks in transfer lines SL-140, SN-242. (Plume)	Line leak during saltwell pumping (corrosion)	F3	S2	D12	29
			HAZARDOUS CONDITIONS					
C-3-b	102AW-04-STRU04	Radioactive waste transfer through DST central pump pit	Release of liquid radioactive waste from Tank 241-AW-102 central pump pit due to leak to soil	Piping leak and leak from pump pit due to equipment drop	F2	S2	D10	29X
C-3-b	102AW-04-STRU05	Radioactive waste transfer through DST central pump pit	Release of liquid radioactive waste from Tank 241-AW-102 central pump pit due to leak to soil	Piping leak and leak from pump pit due to seismic event	F1	S2	D18	29X
B-3-b	XS-01-FLOW07	Saltwell liquor being transferred to DCRT	Release of liquid radioactive waste to the soil from transfer piping from SST to DCRT due to leakage (plume)	Pipe failure from various causes	F3	S2	D12	29X
B-3-b	XS-02-FLOW04	PFP waste being transferred to DCRT	Release of liquid radioactive waste to soil from transfer pipe (non-pool) subsurface plume	Failure to adjust waste pH prior to transfer causes leak	F2	S2	E01	29X
C-3-b	XS-37-FLOW02	Liquid waste involved in cross-site transfer	Release of radioactive liquid waste to soil from transfer piping due to leak of liquid waste from concrete encasement (subsurface plume)	Leak of transfer piping with encasement leak or blocked drain to catch tank (liquid oozes out concrete encasement)	F3	S2	D12	29X

Table D3.3-2. Analyzed Accidents and the Represented Hazardous Conditions.[1] (68 sheets)

BIN	ID	Material at Risk	Hazardous Condition	Cause	Freq NC	Safety Cons NC	Cause Grp	Rep Acc
B-3-b	XS-48-FLOW	Liquid waste transferred from B-Plant to diversion box	Release of liquid waste to soil from transfer piping between B-Plant and 241-ER-152 diversion box due to leak (plume)	Piping failure from various causes	F3	S2	D12	29X
ANALYZED ACCIDENT: Sodium Fire								
A-1-a	2727W-06	Building inventory	Release of hazardous materials from 2727-W due to sodium-water reactions	High wind or tornado destroys building with rain/snow	F2	S2	D20	30
HAZARDOUS CONDITIONS								
A-1-a	2727W-02	Building inventory	Release of hazardous material from 2727-W due to sodium fire	Vehicle crashes into building and ignites sodium	F1	S2	B25	30X
A-1-a	2727W-03	Building inventory	Release of hazardous material from 2727-W due to sodium fire	Lightning	F2	S2	B21	30X
A-1-a	2727W-04	Building inventory	Release of hazardous material from 2727-W due to sodium fire	Overhead power line falls through building	F1	S2	B09	30X
A-1-a	2727W-05	Building inventory	Release of hazardous material from 2727-W due to sodium fire	Nitrogen tank overpressurizes sodium tank, ignites sodium	F3	S2	B01	30X
ANALYZED ACCIDENT: Above Ground Structure Failure								
B-1-a	ITK-FR-08	DST & SST tank liquid held in flex receiver	Release of radioactive aerosols/vapors from flex receiver due to structural failure	High winds tear flex receiver bag	F3	S2	D20	31
HAZARDOUS CONDITIONS								
B-1-a	CRN-11-IB	Contents of equipment	Release of radioactive and/or toxic materials from facility due to equipment damage by boom failure	Human error: improper load assembly, rigging, crane overloaded	F3	S2	E10	31X
B-1-a	CRN-12-IB	Contents of equipment	Release of radioactive and/or toxic materials from facility due to equipment damage by boom failure	Mechanical failure: corrosion, faulty materials	F2	S2	D10	31X

Table D3.3-2. Analyzed Accidents and the Represented Hazardous Conditions.[1] (68 sheets)

BIN	ID	Material at Risk	Hazardous Condition	Cause	Freq NC	Safety Cons NC	Cause Grp	Rep Acc
B-1-a	CRN-13-IB	Contents of equipment	Release of radioactive and/or toxic materials from above ground facility due to equipment damage by boom failure	High wind or seismic event	F2	S2	D05	31X
B-1-a	CRN-18	Contaminates on above ground equipment	Release of radioactive or toxic material from above ground tank equipment due to dropping crane load	Human error: improper load assembly, rigging, crane overloaded	F3	S2	D10	31X
B-1-a	CRN-18-I	Material in aboveground facility equipment	Release of radioactive or toxic material from aboveground facility equipment due to dropping crane load	Human error: improper load assembly, rigging, crane overloaded	F3	S2	E10	31X
B-1-a	CRN-19-I	Material in aboveground facility equipment	Release of radioactive or toxic material from aboveground facility equipment due to dropping crane load	Mechanical failure: corrosion, faulty materials	F2	S2	D10	31X
B-1-a	CRN-20-I	Material in aboveground facility equipment	Release of radioactive or toxic material from aboveground facility equipment due to dropping crane load	High wind or seismic event	F2	S2	D05	31X
B-1-a	CRN-23-IB	Contents of facility	Release of radioactive or toxic materials from aboveground facility bottom due to loss of vertical load control, dropping crane load into facility	High wind or seismic event	F2	S2	D05	31X
C-2-b	CRN-25-IB	Material in aboveground facility or equipment	Release of radioactive or toxic material from aboveground MISF due to swinging load into equipment caused by loss of lateral load control	Human error: improper load assembly, rigging, positioning error	F3	S2	E26	31X
C-2-b	CRN-26-IB	Material in aboveground facility or equipment	Release of radioactive or toxic material from aboveground MISF due to swinging load into equipment caused by loss of lateral load control	Mechanical failure: corrosion, faulty materials, hydraulics, outriggers in soft soil	F2	S2	D26	31X
C-2-b	CRN-27-IB	Material in aboveground facility or equipment	Release of radioactive or toxic material from aboveground MISF due to swinging load into equipment caused by loss of lateral load control	Mechanical failure: corrosion, faulty materials, hydraulics, outriggers in soft soil	F2	S2	D10	31X

Table D3.3-2. Analyzed Accidents and the Represented Hazardous Conditions.[1] (68 sheets)

BIN	ID	Material at Risk	Hazardous Condition	Cause	Freq NC	Safety Cons NC	Cause Grp	Rep Acc
C-1-a	ITK-FR-03	DST & SST tank inventory	Release of radioactive aerosols from tank and/or receiver due to equipment jam in riser	Equipment becomes lodged in riser, efforts to remove pull riser out of tank causing breach of tank & receiver containment	F1	S2	E05	31X
C-1-a	ITK-FR-22	DST & SST tank liquid held in flex receiver	Release of radioactive aerosols from flex receiver due to tank gas release	Tank gas release pressurizes bag and causes bag to rupture	F1	S2	D01	31X
B-1-a	LDUA 5-40	Radioactive aerosols in single shell tank headspace	Release of contamination from TRIC and tank riser due to damage during wind storm	High winds	F3	S2	D14	31X
A-1-a	NP-05	Head space inventories, ventilation system inventories, surface contaminates, 209-E inventory, tanker spill at 204-AR	Radioactive and hazardous material release from tanks, nearby ground surfaces, and ventilation systems due to above grade disturbances	High winds	F1	S2	D20	31X
ANALYZED ACCIDENT: Steam Intrusion from Interfacing Systems								
B-1-a	I-242A-6-CMP-A	Aerosols and particulates entrained in steam from Tank 241-AW-102	Release (steam) of aerosols to the atmosphere through unsealed cracks in the cover blocks due to over pressurization of the receiver tank	Human error - steam block valve inadvertently left opened	F3	S3	E01	32
HAZARDOUS CONDITIONS								
B-1-a	I-222S-1-LVL-A	Aerosols and particulates from 244-S entrained in the steam	Release (steam) of aerosols and entrained particulates to atmosphere through ventilation due to over pressurization of 244-S DCRT caused by sending just steam to tank farm	Human error - failing to shut off steam after Tank 219-S-102 is empty	F3	S2	E01	32X

Table D3.3-2. Analyzed Accidents and the Represented Hazardous Conditions.[1] (68 sheets)

BIN	ID	Material at Risk	Hazardous Condition	Cause	Freq NC	Safety Cons NC	Cause Grp	Rep Acc
B-1-a	I-222S-2-PRS-A	Aerosols and particulates from 244-S entrained in the steam	Release (steam) of aerosols and particulates to atmosphere through ventilation due to over pressurization of 244-S DCRT caused by sending just steam to tank farm	Steam reducer valve fails open	F3	S2	D01	32X
B-1-a	I-242A-2-CMP-B	Aerosols and particulates entrained in steam from receiver tank	Release to the atmosphere through unsealed cracks in the cover blocks due to over pressurization of the receiver tank	Steam block valves inadvertently opened or left open	F2	S3	E01	32X
B-1-a	I-PFP-2-TMP-B	Steam release of aerosols and entrained particulates from 244-TX	Release (steam) of aerosols and entrained particulate from 244-TX ventilation system due to saturating HEPAs with steam sending higher pressure steam to steam jet, gassing it out	Failure of steam reducer	F2	S2	D01	32X
B-1-a	I-PUREX-1-LVL-A	Aerosols from Tank 241-AW-105	Release of aerosols from Tank 241-AW-105 through cracks in the cover block due to pressurizing tank from transfer of steam	Human error - failure to shut off steam jet when U-3 is empty	F3	S2	E01	32X
B-1-a	I-PUREX-2-PRS-A	Aerosols and particulates entrained in steam from receiver tank	Release (steam) of aerosols and particulates through cracks in the cover block from the receiver tank due to tank pressurization which gases out the steam jet	Steam reducer fails	F2	S2	D01	32X
B-1-a	I-PUREX-3-LVL-A	Aerosols from Tank 241-AW-105	Release of aerosols from Tank 241-AW-105 through cracks in the cover block due to pressurizing tank from transfer of steam	Human error - failure to shut off steam jet when U-3 is empty	F3	S2	E01	32X
B-1-a	I-PUREX-4-PRS-A	Aerosols and particulates entrained in steam from receiver tank	Release of aerosols and particulates through cracks in the cover block from the receiver tank due to tank pressurization which gases out the steam jet	Steam reducer fails	F2	S2	D01	32X
B-1-a	I-TPLANT-2-CMP-A	Aerosols and particulates from 244-S entrained in the steam	Release (steam) of aerosols and entrained particulates to atmosphere through ventilation due to over pressurization of 244-S DCRT caused by sending just steam to the tank farm	Human error - steam block valve inadvertently opened or failure to close valve when Tank 15-1 is low	F3	S2	E01	32X

Table D3.3-2. Analyzed Accidents and the Represented Hazardous Conditions.[1] (68 sheets)

BIN	ID	Material at Risk	Hazardous Condition	Cause	Freq NC	Safety Cons NC	Cause Grp	Rep Acc
B-1-a	XS-02-FLOW02	DCRT filter inventory	Release of aerosols and particulate from DCRT ventilation filter due to transfer of steam from PFP steam jet into DCRT headspace	Human error (failure to shut off steam jet at completion of transfer) which causes DCRT ventilation filter failure	F3	S2	E01	32X

[1]This table was generated from a relational database of hazards information. Changes from the previous revision of this table have been independently reviewed, but are not highlighted in Redline.

Table D3.4-1. Hazardous Conditions With Potential Significant Offsite Consequences (S3).[1] (11 sheets)

ID	Hazardous Condition	Cause	Freq NC	Env Cons
102AW-01-FLOW 102AW-02-PRES	Release of liquids, solids and/or vapors from Tank 241-AW-102 due to dome collapse caused by chemical reaction of incompatible wastes	Misrouting to destination other than intended creates chemical incompatibility	F0	E3
102AW-01-FLOW 102AW-04-PRES	Release of radioactive aerosol from transfer pipe which runs from DCRT to Tank 241-AW-102 due to spray leak into open underground structure	Piping leak due to thermal stress of transferring hot solution in cold pipe	F3	E2
102AW-01-FLOW01	Release of liquid radioactive waste aerosols from transfer pipe to Tank 241-AW-102 due to spray leak into open underground structure	Piping leak due to corrosion caused by transferring high temperature waste	F2	E2
102AW-01-TEMP	Release of liquid radioactive waste aerosols from transfer pipe to Tank 241-AW-102 due to spray leak of liquid waste from transfer pipe leak	Piping leak due to exceeding the design temperature of the pipe by transferring high temperature waste	F1	E3
102AW-02-PRES01	Release of radioactive aerosols from Tank 241-AW-102 due to fire/explosion in waste tank (Dome Collapse)	Flammable concentration of gases in tank vapor space with spark source	F2	E2
102AW-02-PRES03	Release of liquids, solids and/or vapors from Tank 241-AW-102 due to dome collapse caused by excessive vacuum	Blocked ventilation inlet causes excessive vacuum leading to dome collapse	F0	E3
102AW-02-PRES04	Release of liquids, solids and/or vapors from Tank 241-AW-102 due to dome collapse caused by excessive vacuum	Condensation of vapors causes excessive vacuum leading to dome collapse	F0	E3
102AW-02-PRES05	Release of liquids, solids and/or vapors from Tank 241-AW-102 due to dome collapse caused by excessive vacuum	Sub-cooling of vapor during equipment flushing causes excessive vacuum leading to dome collapse	F0	E3
102AW-02-PRES06	Release of liquids, solids and/or vapors from Tank 241-AW-102 due to dome collapse caused by excessive vacuum	Ventilation imbalance causes excessive vacuum leading to dome collapse	F0	E3
102AW-02-PRES07	Release of liquids, solids and/or vapors from Tank 241-AW-102 due to dome collapse caused by excessive vacuum	Wrong size portable ventilator chosen for support work causes excessive vacuum leading to dome collapse	F0	E3
102AW-03-LEVE03	Release of liquids, solids and/or vapors from Tank 241-AW-102 due to dome collapse caused by floating the primary tank within the annulus	Misrouting of liquid waste to the annulus causes floating of primary tank and subsequent dome collapse	F1	E3
102AW-03-TEMP01	Release of liquids, solids and/or vapors from Tank 241-AW-102 due to dome collapse caused by an fire/explosion in the annulus	Fire/ Explosion of flammable liquid spilled into annulus via a riser	F2	E3
102AW-04-STRU01A	Release of liquids, solids and/or vapors from Tank 241-AW-102 due to dome collapse caused by excessive dome loading	Equipment drop during crane work causes excessive dome loading	F3	E3
102AW-04-STRU02	Release of liquids, solids and/or vapors from Tank 241-AW-102 due to dome collapse caused by excessive dome loading	Violation of limits on dome loading	F3	E3

Table D3.4-1. Hazardous Conditions With Potential Significant Offsite Consequences (S3).[1] (11 sheets)

ID	Hazardous Condition	Cause	Freq NC	Env Cons
102AW-09-COMP01	Release of combustion product aerosols from Tank 241-AW-102 due to fire in separable organic layer in waste tank causing dome collapse	Organic reaching flash point or being aerosolized plus ignition source	F2	E3
102AW-09-COMP02	Release of radioactive waste aerosols from Tank 241-AW-102 due to fire in fuel spilled in waste tank causing dome collapse	Spill of fuel from external source plus fuel reaching flash point or being aerosolized plus ignition source	F2	E3
102AW-13-FLOW01	Release of radioactive waste aerosols due to spray leak of waste from flush pit	Backflow of waste to flush pit with valve or pipe leak and cover block off	F1	E3
102S-03.b4	Release of radioactive aerosols to atmosphere from Tank 241-S-102 due to burning fuel flowing into waste tank causing dome collapse	Vehicle drives into open riser puncturing gas tank + Ignition + Flammable organic vapors in tank	F3	E3
102S-04.c	Release of radioactive aerosols contained in Tank 241-S-102 vapor space to atmosphere due to ignition of flammable gas in tank vapor space	Concentration of H2 or Ammonia (or other flammable gasses) above LFL + Ignition source	F1	E3
102S-04.d1	Release of radioactive aerosols contained in Tank 241-S-102 vapor space to the atmosphere due to low pressure causing dome collapse	Misoperation of exhauster during saltwell pumping	F0	E3
102S-04.e3	Release of radioactive aerosols contained in Tank 241-S-102 vapor space to atmosphere due to generation of excessive heat leading to dome collapse	Addition of incompatible waste/chemical (misroute)	F0	E3
102S-05.a1a	Release of radioactive aerosols from Tank 241-S-102 to atmosphere due to dome collapse	Excess gravel overburden	F3	E3
102S-05.a1aa	Release of radioactive aerosols from Tank 241-S-102 to atmosphere due to dome collapse	Large vehicle traffic over tank	F3	E3
102S-05.a2	Release of radioactive aerosols from Tank 241-S-102 to atmosphere due to dome collapse	Seismic event (common mode failure)	F1	E3
102S-05.a3	Release of radioactive aerosols from Tank 241-S-102 to atmosphere due to dome collapse	Past thermocycling of tank	F1	E3
102S-05.a3a	Release of radioactive aerosols from Tank 241-S-102 to atmosphere due to dome collapse	Long term aging	F1	E3
106C-01A	Release of radioactive and/or hazardous material from Tank 241-C-106, structural damage and dome collapse due to tank low pressure	Air inlet plugged due to icing/dust	F0	E3
106C-01B	Release of radioactive and/or hazardous material from Tank 241-C-106, structural damage and dome collapse due to tank low pressure	Inlet air valve closed	F0	E3

Table D3.4-1. Hazardous Conditions With Potential Significant Offsite Consequences (S3).[1] (11 sheets)

ID	Hazardous Condition	Cause	Freq NC	Env Cons
106C-01C	Release of radioactive and/or hazardous material from Tank 241-C-106, structural damage, and dome collapse due to tank low pressure	Exhauster damper positioned incorrectly	F0	E3
106C-01D	Release of radioactive and/or hazardous material from Tank 241-C-106, structural damage and dome collapse due to tank low pressure	Wrong sized portable exhauster	F0	E3
106C-01E	Release of radioactive and/or hazardous material from Tank 241-C-106, structural damage and dome collapse due to tank low pressure	Subcooling of tank vapor space due to water addition of flushing	F2	E3
106C-01I	Release of radioactive and/or hazardous material from Tank 241-C-106 due to possible dome collapse caused by tank high pressure	Fire in waste tank	F2	E3
106C-01J	Release of radioactive and/or hazardous material from Tank 241-C-106 due to high pressure in tank and possible dome collapse	Fire/explosion in waste tank	F2	E3
106C-01Ma	Release of radioactive and/or hazardous material from Tank 241-C-106 due to flammable gas fire/explosion in tank caused by high temperature (dome collapse)	Chemical reaction in tank	F2	E2
106C-01X	Release of radioactive and/or hazardous material from Tank 241-C-106, dome structural damage and/or personnel injury due to overload of tank dome	Overweight vehicles over top of tank	F3	E3
106C-01Y	Release of radioactive and/or hazardous material from Tank 241-C-106, dome structural damage and/or personnel injury due to overload of tank dome	Flooding over top of tank	F2	E3
106C-02A	Release of radioactive and/or hazardous material from Tank 241-C-106 due to dome collapse caused by ignition of high flammable gas content in tank	High waste temperature	F2	E3
106C-02B	Release of radioactive and/or hazardous material from Tank 241-C-106 due to ignition of high flammable gas content in tank and possible dome collapse	Ventilation system failure	F2	E3
106C-02C	Release of radioactive and/or hazardous material from Tank 241-C-106 due to dome collapse caused by ignition of high flammable gas content in tank	Tank burp, release of trapped gas	F2	E3
106C-04A	Release of radioactive and/or hazardous material from Tank 241-C-106 due to tank damage caused by flammable gas fire/explosion because of high flammable gas content in the tank (dome collapse)	High flammable gas content due to chemical reaction in sludge layer	F2	E2
106C-04B	Release of radioactive and/or hazardous material from Tank 241-C-106 due to fire/explosion caused by ignition of flammable gas released from radiolysis in tank sludge	Radiolysis in sludge layer allows release of trapped gas to vapor space	F2	E3

Table D3.4-1. Hazardous Conditions With Potential Significant Offsite Consequences (S3).[1] (11 sheets)

ID	Hazardous Condition	Cause	Freq NC	Env Cons
106C-13A	Release of radioactive and/or hazardous material from Tank 241-C-106 due to possible dome collapse, tank damage caused by high temperature	Fire in Tank 241-C-105 propagates into Tank 241-C-106	F2	E3
114SX-04.a.2	Radioactive aerosols released from failed tank dome due to vacuum produced by valving error.	Human error: Valve out flammable watch list (Tank 241-SX-109) butterfly valve	F0	E3
114SX-04.a.3	Release of radioactive aerosols from Tank 241-SX-114 to atmosphere due to high temperatures causing dome concrete strength loss	No ventilation flow High ambient temperature conditions Resulting in tank degradation	F1	E3
114SX-04.b.1.a.2	Release of radioactive material from Tank 241-SX-114 to atmosphere due to high temperature in the dome leading to dome collapse (long term closure of butterfly valve)	Human error: Closure of Tank 241-SX-114 exhaust butterfly valve isolating tank from exhaust plenum Resulting in tank degradation	F1	E3
114SX-04.b.1.b.2a	Release of radioactive aerosols to atmosphere from Tank 241-SX-114 waste due to heat induced tank dome collapse	Ducting failure due to bad welds	F1	E3
114SX-04.b.1.b.2b	Release of radioactive aerosols to atmosphere from Tank 241-SX-114 waste due to heat induced tank dome collapse	Ducting failure due to seismic activity coupled with failure to respond Resulting in tank degradation	F1	E3
114SX-04.b.1.c.2	Release of radioactive aerosols to atmosphere from Tank 241-SX-114 waste due to dome collapse	Exhauster failure Fan failure Filter rupture (low differential pressure shutdown) Resulting in tank degradation	F0	E3
114SX-04.b.1.d.2	Release of radioactive aerosols from Tank 241-SX-114 waste to atmosphere due to dome collapse	Filter plugging results in lack of heat removal with high temperatures degrading dome strength	F1	E3
114SX-04.b.3b	Release of radioactive aerosols from head space of Tank 241-SX-114 to atmosphere through exhaust HEPA filter due to flammable gas ignition in the headspace (dome collapse)	Flammable gas fire/explosion in Tank 241-SX-114 (Note: Tank 241-SX-114 is NOT currently identified as a Flammable Gas Watch List Tank) Requires spark to be present	F1	E2
114SX-05.b.1	Release of radioactive aerosols from Tank 241-SX-114 waste to atmosphere due to flammable gas ignition resulting in dome collapse	Radiolysis creating bubbles of gases in waste	F2	E3

Table D3.4-1. Hazardous Conditions With Potential Significant Offsite Consequences (S3).[1] (11 sheets)

ID	Hazardous Condition	Cause	Freq NC	Env Cons
114SX-05.b.3	Release of radioactive aerosols from Tank 241-SX-114 waste to atmosphere due to dome collapse caused by sudden vacuum in tank	Quenching (adding cold liquid to hot tank contents) creating a vacuum	F0	E3
114SX-05.c.2b	Release of radioactive aerosols from Tank 241-SX-114 waste to atmosphere due to dome collapse	Chemical reaction caused by addition of chemical/solution. Resulting in tank degradation	F1	E3
114SX-06.a.1a	Release of radioactive aerosols from Tank 241-SX-114 waste to atmosphere due to dome collapse	Gravel overburden Large vehicle	F3	E3
114SX-06.a.1b	Release of radioactive aerosols from Tank 241-SX-114 waste to atmosphere as a result of a dome collapse	Deflagration of H2 (Implies gas generation with spark)	F1	E3
114SX-06.a.3	Release of radioactive aerosols from Tank 241-SX-114 waste to the atmosphere due to dome collapse caused by loss of strength due to aging	Long term aging resulting in tank degradation	F1	E3
244AR-02.a.14	Release of radioactive aerosols from waste contained in tanks (4) and building due to earthquake	Seismic event collapses building and four tanks	F1	E3
CCF-17	Release of radioactive and hazardous materials from tank due to dome collapse	Corrosion of rebar in concrete SST domes	F1	E3
CCF-18	Release of radioactive and hazardous materials from tanks due to dome collapses	Fire in tank propagates to connecting tank and both tanks collapse during cooldown from negative tank pressure	F0	E3
CCF-19	Release of radioactive and hazardous materials from tanks due to dome collapses	Fire in tank causes pressure transient that leads to GRE in connecting tank with subsequent fire and tank collapses from negative tank pressure	F0	E3
COB-01	Release of radioactive and/or hazardous material from COB due to spray leak	Flange, gasket or valve, spray leak with COB lid removed	F3	E2
CP-GRT-02	Release of radioactive or toxic material to soil surface (pool) from transfer line due to puncture of line during transfer	Human error AND Mechanical failure of push pipe integrity inside the transfer line	F1	E3
CP-MSP-05	Release of radioactive or toxic material to atmosphere from waste tank due to flammable gas deflagration	Human error AND Flammable gas is present in tank AND Mechanical failure of the pipe and probe (ignition source)	F1	E3

Table D3.4-1. Hazardous Conditions With Potential Significant Offsite Consequences (S3).[1] (11 sheets)

ID	Hazardous Condition	Cause	Freq NC	Env Cons
CP-MSP-06	Release of radioactive or toxic material to atmosphere due to flammable gas deflagration caused by puncture and ignition of flammable gas in transfer line which propagates to the waste tank	Human error AND Flammable gas is present in transfer pipe AND Spark from probe tip (ignition source)	F1	E3
CP-RMV-03	Release of radioactive or toxic material from transfer line through the push pipe during removal activities	Human error	F1	E3
CP-SET-04	Release of radioactive or toxic material from waste tank due to dome collapse	Excessive weight on tank dome (static load of platform)	F2	E3
CP-SET-05	Release of radioactive or toxic material from waste tank due to dome collapse caused by load drop	Mechanical failure of equipment causes load drop	F2	E3
CP-SET-06	Release of radioactive or toxic material from waste tank due to dome collapse caused by load drop	Human error causes load drop	F3	E3
CP-SSP-01	Release of radioactive or toxic material to soil surface (pool) from transfer line due to puncture of line during transfer	Human error caused puncture to transfer line during push operations.	F1	E3
CP-SSP-16	Release of radioactive or toxic material to soil surface (pool) from transfer line due to puncture of line during transfer	Human error AND Mechanical failure of push pipe integrity inside the transfer line	F1	E3
CRN-03	Release of radioactive and/or toxic materials from tank due to dome collapse	Human error results in excessive weight on dome	F3	E3
CRN-04	Release of radioactive and/or toxic materials from tank due to dome collapse	Crane or rigging failures drop load resulting in large impact to dome	F3	E3
CRN-11	Radioactive or toxic material release from tank due to boom failure and tank/equipment damage and dome collapse	Human error: improper load assembly, rigging, crane overloaded	F3	E3
CRN-12	Radioactive or toxic material release from tank due to boom failure and tank/equipment damage and dome collapse	Mechanical failure: corrosion, faulty materials	F3	E3
CRN-13-a	Release of radioactive or toxic material from tank/equipment damage and dome collapse due to boom failure	High wind	F3	E3
CRN-13-b	Release of radioactive or toxic material from tank/equipment damage and dome collapse due to boom failure	Seismic event	F1	E3
EE-01	Release of radioactive and toxic materials from tanks due to external force and fire	Aircraft crash	F1	E3
EE-04-a	Release of radioactive and hazardous materials from SST tank due to external fires	Vehicle accident involving propane, diesel or gasoline delivery	F2	E3
EE-04-b	Release of radioactive and hazardous materials from DST tank due to external fires	Vehicle accident involving propane, diesel or gasoline delivery	F2	E3

Table D3.4-1. Hazardous Conditions With Potential Significant Offsite Consequences (S3).[1] (11 sheets)

ID	Hazardous Condition	Cause	Freq NC	Env Cons
EE-05-a	Release of radioactive or hazardous materials from SST tank due to external fires	Run-away vehicle or truck shears off one or more risers, ruptures gasoline tank	F3	E3
EE-05-b	Release of radioactive or hazardous materials from DST tank due to external fires	Run-away vehicle or truck shears off one or more risers, ruptures gasoline tank	F3	E3
EE-16	Release of radioactive and hazardous material from transfer line spray leak due to excavation error	Excavation into waste transfer line during a transfer	F3	E2
I-222S-1-CMP-E	Release of radioactive aerosols to the atmosphere from 244-S or receiver tank due to over pressurization of tank caused by organic fire	Human error - upset of 222-S Lab operations	F3	E3
I-242A-1-FLW-A	Release of radioactive material from Feed Tank 241-AW-102 due to fire/explosion caused by igniting hydrogen gas when pump is damaged and possibly becomes an ignition source from dead heading	Valves fail to regulate (closed position) which fails pump and creates ignition source, sufficient hydrogen accumulation for fire/ explosion.	F2	E3
I-242A-1-FLW-B	Release of radioactive material from Feed Tank 241-AW-102 due to fire/explosion caused by igniting hydrogen gas when pump is damaged and possibly becomes an ignition source	Feed pump fails and causes ignition source, sufficient hydrogen accumulation for fire/explosion	F2	E3
I-242A-1-FLW-C	Release of radioactive material from Feed Tank 241-AW-102 due to fire/explosion caused by igniting hydrogen gas when pump is damaged and possibly becomes an ignition source from dead heading	Plugged line which fails pump and causes ignition source, sufficient hydrogen accumulation for fire/explosion	F2	E3
I-242A-1-FLW-D	Release of radioactive material from Feed Tank 241-AW-102 due to fire/explosion caused by igniting hydrogen gas when pump is damaged and possibly becomes an ignition source	Pump plugged which fails pump and causes ignition source, sufficient hydrogen accumulation for fire/explosion	F2	E3
I-242A-1-FLW-E	Release of radioactive material from Feed Tank 241-AW-102 due to fire/explosion caused by igniting hydrogen gas when pump is damaged and possibly becomes an ignition source from pump cavitation	Empty feed tank which fails pump and causes ignition source, sufficient hydrogen accumulation for fire/explosion	F2	E3
I-242A-2-CMP-B	Release to the atmosphere through unsealed cracks in the cover blocks due to over pressurization of the receiver tank	Steam block valves inadvertently opened or left open	F2	E3
I-242A-4-TMP-A	Release of radioactive material from Tank 241-AW-102 caused by ignition of organics in Tank 241-C-100 which pressurizes the drain line and propagates the fire down the line to Feed Tank 241-AW-102	Faulty control of vacuum to CA-1 vessel causing pot to boil with organic layer available	F0	E3
I-242A-6-CMP-A	Release (steam) of aerosols to the atmosphere through unsealed cracks in the cover blocks due to over pressurization of the receiver tank	Human error - steam block valve inadvertently left opened	F3	E3

Table D3.4-1. Hazardous Conditions With Potential Significant Offsite Consequences (S3).[1] (11 sheets)

ID	Hazardous Condition	Cause	Freq NC	Env Cons
I-BPLANT-1-CMP-E	Release of tank waste due to fire in receiver tank from transferring organics from B Plant	Human error - tank containing organics in B Plant rupture and spills organics to the drains which eventually end up in Tank 24-1 and an inadvertent transfer to tank farms	F1	E3
I-PFP-1-CMP-E	Release of high level waste from receiver tank due to fire from organics transferred from PFP	Excess organic material added to waste results in fire	F2	E3
ITK-08	Release of radioactive material from in-tank fire or explosion due to intrusive activity (dome collapse)	Exothermic reaction of incompatible materials in tank	F3	E2
ITK-09	Release of radioactive material from in-tank fire or explosion due to intrusive activity (dome collapse)	Failure to bond components or incorrect bonding	F3	E2
ITK-10-a	Release of radioactive material from in-tank fire or explosion due to intrusive activity (dome collapse)	Spark from equipment or tools	F3	E2
ITK-10-b	Release of radioactive material from in-tank fire or explosion due to intrusive activity (dome collapse)	Spark from equipment or tools	F3	E2
ITK-11	Release of radioactive material from in-tank fire or explosion due to intrusive activity (dome collapse)	Lightning, range fire, or seismic event ignites tank vapors	F2	E2
ITK-FR-04	Release of radioactive aerosols from tank due to tank collapse	Equipment becomes lodged in riser, efforts to remove pull riser out of tank causing loss of structural integrity leading to tank collapse	F1	E3
ITK-FR-19	Release of radioactive aerosols from tank due to dome collapse	Hydraulic jacks on assembly stand are operated while assembly is bolted to flange tearing out riser and destroying tank integrity leading to dome collapse	F1	E3
LDUA 1-25	Release of aerosolized waste to the atmosphere from headspace of single shell tank due to ignition of flammable gas	Fire (electrical, lighting)	F2	E3
LDUA 1-32	Release of aerosolized waste to the atmosphere from headspace of single shell tank due to ignition of flammable gas	During planned intrusive activities, sampling triggers GRE	F3	E3
LDUA 1-33	Release of aerosolized waste to the atmosphere from headspace of single shell tank due to ignition of flammable gas	Non-arm end effectors (OVS, OSVS) dropped down riser	F2	E3
LDUA 2-2	Release of aerosolized waste to the atmosphere from headspace of single shell tank due to ignition of hydraulic fluid	Structural failure of hydraulic system	F2	E3

Table D3.4-1. Hazardous Conditions With Potential Significant Offsite Consequences (S3).[1] (11 sheets)

ID	Hazardous Condition	Cause	Freq NC	Env Cons
LDUA 2-20	Release of aerosolized waste to the atmosphere from headspace of single shell tank due to ignition of flammable gas	Combustible source of gas located near the compressor intake.	F3	E3
LDUA 2-51	Release of aerosolized waste to the atmosphere from headspace of single shell tank due to ignition of flammable gas	Supervisor error - arm in wrong mode, Electric remains on after air purge fault, flammable gas enters arm, spark ignites gas	F1	E3
LDUA 5-43	Release of aerosolized waste to the atmosphere from headspace of single shell tank due to ignition of flammable gas	Lightning strikes VPM in raised position	F2	E3
LDUA 5-45	Release of aerosolized waste to the atmosphere from headspace of single shell tank due to ignition of flammable gas	Helicopter/airplane crash	F1	E3
LDUA 6-24	Release of aerosolized waste to the atmosphere from headspace of single shell tank due to ignition of flammable gas	Wrong setting on safety interlock for electric shutdown on loss of purge air	F3	E3
LDUA/EREE 1-22	Release of aerosolized waste to the atmosphere from headspace of single shell tank due to ignition of flammable gas	Electrical Short in LDUA Lighting short	F2	E3
LDUA/EREE 1-28	Release of aerosolized waste to the atmosphere from headspace of single shell tank due to ignition of flammable gas	Electrical Short in LDUA/ EREE Lighting short	F3	E3
NP-07	Radioactive and hazardous material releases from tanks and ventilation systems due to seismic event	Seismic event collapses domes	F1	E3
NP-08	Radioactive and hazardous material releases from transfer pipes due to seismic event (possible spray leak)	Seismic event shears pipes and encasements during transfer	F2	E2
NP-11	Radioactive and hazardous material releases from tank farms due to lava flow	Eruption of molten lava from fissures	F0	E3
NP-13	Radioactive and hazardous material releases from tanks due to excessive weight on dome	Accumulations of heavy snow followed by heavy rain	F2	E3
OGT-EXT3-01A	Release of radioactive or hazardous aerosols from the primary pipe due to spray leak caused by truck crash into piping system	Human error, line struck by truck	F3	E3
OGT-FLOW1-03A	Release of radioactive or hazardous aerosols from the primary pipe due to spray leak caused by misdirected flow	Spray leak caused by JR-1 (3-way valve) mispositioned to flush, two check valves fail, flush disconnect fails (check valve), reverse flow to external flush fixture and release to the environment	F1	E3

Table D3.4-1. Hazardous Conditions With Potential Significant Offsite Consequences (S3).[1] (11 sheets)

ID	Hazardous Condition	Cause	Freq NC	Env Cons
OGT-FLOW2-02	Release of radioactive or hazardous aerosols from the primary pipe due spray leak caused by over-rated pump	Installation of incorrect pump and failure of inner pipe, failure of weld on flange of outer pipe, isolation valves closed on secondary pipe drains and no concrete shield in place	F2	E2
OGT-NP3-01	Release of radioactive or hazardous aerosols from the primary pipe due spray leak caused by seismic event	Failure of line and concrete shielding during seismic event	F1	E2
OGT-NP3-02	Release of radioactive or hazardous aerosols from the primary pipe due to leak caused by high wind	Pipe is blown off supports and no concrete shielding in place	F1	E2
W058-FLOW15	Release of radioactive slurry aerosols to the atmosphere caused by spray leak of slurry from the SY-A or SY-B valve pit due to piping system leak	Computer failure or human error causing misrouting of material when flow path is not completely connected	F2	E3
W058-FLOW16	Release of radioactive slurry aerosols to the atmosphere caused by spray leak of slurry from the SY-A or SY-B valve pit due to piping system leak	External leak of valve or valves to the valve pit	F2	E3
W058-FLOW17a	Release of radioactive slurry aerosols to the atmosphere caused by spray leak of slurry from the SY-A or SY-B valve pit due to piping system leak	Failure of jumper due to misalignment (human error) plus mitigative features failure	F2	E3
W058-FLOW17b	Release of radioactive slurry aerosols to the atmosphere caused by spray leak of slurry from the SY-A or SY-B valve pit due to piping system leak	Failure of jumper due to gasket failure plus mitigative features failure	F2	E3
W058-FLOW17c	Release of radioactive slurry aerosols to the atmosphere caused by spray leak of slurry from the SY-A or SY-B valve pit due to piping system leak	Failure of jumper due to corrosion plus mitigative features failure	F2	E3
W058-FLOW18	Release of radioactive supernate aerosols to the atmosphere caused by spray leak of supernate from the SY-A or SY-B valve pit due to piping system leak	Computer failure or human error causing misrouting of material when flow path is not completely connected	F2	E3
W058-FLOW19	Release of radioactive supernate aerosols to the atmosphere caused by spray leak of supernate from the SY-A or SY-B valve pit due to piping system leak	External leak of valve or valves to the valve pit plus mitigative features failure	F2	E3
W058-FLOW20a	Release of radioactive supernate aerosols to the atmosphere caused by spray leak of supernate from the SY-A or SY-B valve pit due to piping system leak	Failure of jumper due to misalignment (human error) plus mitigative features failure	F2	E3
W058-FLOW20b	Release of radioactive supernate aerosols to the atmosphere caused by spray leak of supernate from the SY-A or SY-B valve pit due to piping system leak	Failure of jumper due to gasket failure plus mitigative features failure	F2	E3

Table D3.4-1. Hazardous Conditions With Potential Significant Offsite Consequences (S3).[1] (11 sheets)

ID	Hazardous Condition	Cause	Freq NC	Env Cons
W058-FLOW20c	Release of radioactive supernate aerosols to the atmosphere caused by spray leak of supernate from the SY-A or SY-B valve pit due to piping system leak	Failure of jumper due to corrosion plus mitigative features failure	F2	E3
W058-INTEG32	Release of radioactive supernate or slurry aerosols to the atmosphere due to a spray leak from test risers located near SY-A and SY-B valve pits	Failure of primary piping and path for spray leak from test riser plus mitigative features failure	F2	E3
W058-INTEG34	Release of radioactive slurry aerosols to the atmosphere caused by spray leak of slurry from the SY-A or SY-B valve pit due to piping system leak	External event (airplane crash, etc)	F1	E3
W058-INTEG35	Release of radioactive slurry aerosols to the atmosphere caused by spray leak of slurry from the SY-A or SY-B valve pit due to piping system leak	Seismic event	F1	E3
W058-INTEG36	Release of radioactive supernate aerosols to the atmosphere caused by spray leak of supernate from the SY-A or SY-B valve pit due to piping system leak	External event (airplane crash, etc)	F1	E3
W058-INTEG37	Release of radioactive supernate aerosols to the atmosphere caused by spray leak of supernate from the SY-A or SY-B valve pit due to piping system leak	Seismic event	F1	E3
XS-01-FLOW02	Release of liquids, solids and/or vapors from single shell tank due to dome collapse caused by flammable gas burn	Loss of pump prime results in overheated pump that ignites flammable gas	F2	E3
XS-01-FLOW03	Release of liquids, solids and/or vapors from single shell tank due to dome collapse and DCRT pressurization caused by flammable gas fire/explosion propagating from DCRT to single shell tank	Pipeline connecting single shell tank and DCRT fills with flammable gas; loss of ventilation flow in DCRT so that a flammable gas atmosphere is ignited by the ventilation outlet heater	F2	E3
XS-06-FLOW02	Release of liquid radioactive waste from DCRT transfer piping to Tank 241-SY-102 due to spray leak in DCRT pump pit	Pipe failure in DCRT pump pit causing spray leak	F2	E3
XS-06-FLOW03	Release of liquid radioactive waste from transfer piping from PFP to DCRT due to spray leak in DCRT pump pit	Pipe failure in DCRT pump pit causing spray leak	F2	E3
XS-13-PRES02	Release of radioactive aerosols from 241-U-301B catch tank due to fire/explosion of flammable gas	Buildup of flammable gas in catch tank and spark source	F2	E2
XS-26-PRES02	Release of radioactive aerosols from Tank 241-SY-102 due to flammable gas fire/explosion (dome collapse)	Accumulation of flammable gases in vapor space and spark source	F2	E2

[1]This table was generated from a relational database of hazards information. Changes from the previous revision of this table have been independently reviewed, but are not highlighted in Redline.

This page intentionally left blank.

Table D3.4-2. Hazardous Conditions With Potential Significant Onsite Consequences (S2).[1] (26 sheets)

ID	Hazardous Condition	Cause	Freq NC	Env Cons
102AW-01-FLOW02	Release of radioactive waste to soil from transfer piping which runs to Tank 241-AW-102 due to leak from primary pipe and encasement	Excavation accident fails primary pipe and encasement	F3	E2
102AW-01-FLOW03	Release of radioactive waste to soil from transfer pipe to Tank 241-AW-102 due to leak of radioactive waste from primary pipe and encasement	Corrosion of inner and outer pipe cause failure of primary pipe and encasement	F3	E2
102AW-01-FLOW04	Release of radioactive waste to soil from transfer pipe to Tank 241-AW-102 due to leak of radioactive waste from primary pipe and encasement	High structural loading from traffic or cranes fails primary pipe and encasement	F3	E2
102AW-01-FLOW05	Release of radioactive waste to soil from transfer piping to Tank 241-AW-102 due to leak from primary pipe and encasement	Seismic event fails primary pipe and encasement	F2	E2
102AW-01-FLOW06	Release of radioactive waste to soil from transfer pipe to Tank 241-AW-102 due to leak of radioactive waste from primary pipe and encasement	Undermining due to leak of nearby pipes cause failure of primary pipe and encasement	F3	E2
102AW-01-FLOW07	Release of radioactive waste to soil from transfer pipe to Tank 241-AW-102 due to leak of radioactive waste from primary pipe and encasement	Water hammer cause failure of primary pipe and encasement	F3	E2
102AW-01-FLOW10	Release of liquid radioactive waste from Tank 241-AW-102 due to overflow	Misrouting of waste from reverse flow caused by the combination of an incorrectly wired pump and a full transfer pipe	F2	E2
102AW-01-FLOW11	Release of liquid radioactive waste to the ground surface from Tank 241-AW-102 due to overflow of Tank 241-AW-102 or underground structure	Misrouting to destination other than intended causes overflow	F3	E2
102AW-01-TEMP01	Release of liquid radioactive waste from transfer pipe to Tank 241-AW-102 due to leaks overflowing from underground structure	Piping leak due to corrosion caused by transferring high temperature waste	F2	E2
102AW-01-TEMP01A	Release of liquid waste from transfer pipe to Tank 241-AW-102 due to leaks overflowing from underground structure	Piping leak due to thermal stress of transferring hot solution in cold pipe	F2	E2
102AW-01-TEMP02	Release of liquid radioactive waste from transfer pipe to Tank 241-AW-102 due to leaks overflowing from underground structure	Piping leak due to exceeding the design temperature of the pipe by transferring high temperature waste	F2	E2
102AW-02-LEVE01	Release of toxic gases from Tank 241-AW-102 due to accumulations of gases	Slurry growth	F1	E1
102AW-02-LEVE03	Release of radioactive liquid from Tank 241-AW-102 due to overfilling	Failure to stop transfer causes overfilling of tank	F3	E2
102AW-02-LEVE04	Release of radioactive liquid from Tank 241-AW-102 due to overfilling	Misrouting causes overfilling of tank	F3	E2
102AW-02-LEVE05	Release of radioactive liquid from Tank 241-AW-102 to the soil column due to gross overfilling of tank (Pool)	Misrouting causes overfilling of tank	F3	E2

Table D3.4-2. Hazardous Conditions With Potential Significant Onsite Consequences (S2).[1] (26 sheets)

ID	Hazardous Condition	Cause	Freq NC	Env Cons
102AW-02-PRES 102AW-02-TEMP	Release of radioactive aerosols from Tank 241-AW-102 due to pressurization	Evaporator dump when intrusive activity is occurring which causes pressurization	F3	E2
102AW-02-PRES02	Release of toxic gases from Tank 241-AW-102 due to chemical reaction in waste	Transfer of incompatible waste to Tank 241-AW-102 causes tank gas accumulation	F3	E2
102AW-02-PRES08	Release of radioactive aerosols from Tank 241-AW-102 due to positive pressure	Evaporator dump of hot liquid generates aerosols and pressurizes the tank	F3	E1
102AW-02-PRES09	Release of radioactive aerosols from head space of Tank 241-AW-102 due to positive pressure (lower energy than tank bump)	Loss of fan with airlift circulators running, generating aerosols and pressurizing the tank	F3	E1
102AW-02-TEMP 102AW-08-TEMP	Release of radioactive aerosols from Tank 241-AW-102 due to positive pressure	Chemical reaction heating up and/or agitating tank causes positive pressure in tank	F2	E1
102AW-02-TEMP01	Release of radioactive aerosols from Tank 241-AW-102 due to boiling waste	High heat waste causing boiling	F2	E2
102AW-02-TEMP02	Release of radioactive aerosols from Tank 241-AW-102 due to tank bump	High heat waste combined with loss of ventilation contributes to tank bump	F2	E2
102AW-03-LEVE01	Release of radioactive aerosols from Tank 241-AW-102 due to fire/explosion in annulus	Flammable concentration of gases in annulus vapor space due to waste leak into annulus and spark source	F2	E2
102AW-03-LEVE02	Release of radioactive aerosols from Tank 241-AW-102 due to fire/explosion in annulus	Flammable concentration of gases in annulus vapor space due to waste mis-transfer into annulus and spark source	F2	E2
102AW-03-TEMP02	Release of radioactive aerosols from Tank 241-AW-102 due to fire/explosion in annulus damaging primary tank	Flammable concentration of gases in annulus vapor space due to spill of fuel into annulus and spark source	F2	E2
102AW-04-STRU03	Release of radioactive particulate from Tank 241-AW-102 central pump pit due to re-suspension	Equipment drop during crane work	F2	E1
102AW-04-STRU04	Release of liquid radioactive waste from Tank 241-AW-102 central pump pit due to leak to soil	Piping leak and leak from pump pit due to equipment drop	F2	E2
102AW-04-STRU05	Release of liquid radioactive waste from Tank 241-AW-102 central pump pit due to leak to soil	Piping leak and leak from pump pit due to seismic event	F1	E2
102AW-04-TEMP	Release of radioactive particulate from Tank 241-AW-102 central pump pit due to fire	Pump motor electrical fire	F1	E1
102AW-08-COMP02	Release of fission product gases and aerosols from Tank 241-AW-102 due to criticality	Misrouting of waste creates critical mass	F1	E2

Table D3.4-2. Hazardous Conditions With Potential Significant Onsite Consequences (S2).[1] (26 sheets)

ID	Hazardous Condition	Cause	Freq NC	Env Cons
102AW-08-COMP02A	Release of fission product gases and aerosols from Tank 241-AW-102 due to criticality	Human error - addition of excess fissile material to Tank 241-AW-102 creates critical mass	F1	E2
102AW-08-COMP03	Release of fission product gases and aerosols from Tank 241-AW-102 due to criticality	Non-uniform distribution of fissile material (horizontally) creates critical mass	F1	E2
102AW-08-COMP04	Release of fission product gases and aerosols from Tank 241-AW-102 due to criticality	Non-uniform distribution of fissile material (vertically) due to addition of "rich" layer	F1	E2
102AW-08-COMP05	Release of fission product gases and aerosols from Tank 241-AW-102 due to criticality	Over concentration of waste creates critical mass	F0	E2
102AW-09-TEMP	Release of aerosols from Tank 241-AW-102 vapor space due to pressurization	Transfer of hot solution from facility, generates aerosols and pressurizes the tank	F3	E1
102AW-09-TEMP01	Release of radioactive aerosols from Tank 241-AW-102 atmosphere due to tank bump	High heat waste plus loss of cooling and/or mixing pump (not yet installed) operation	F2	E2
102AW-13-FLOW02	Release of radioactive liquid from transfer piping out of Tank 241-AW-102 due to backflow of radioactive material into flush pit and subsequent overflow (Pool)	Multiple valving errors and failure of backflow prevention devices dumps to pit as designed	F3	E1
102S-01.a1	Radioactive/hazardous liquid released to soil surface from tank diversion box/access pit to the ground surface due to misrouting a transfer.	Human error (jumper/blank installation) + Mistransfer to Tank 241-S-102 (450-600 Kgal) overfills tank	F2	E2
102S-01.b2	Radioactive liquid released to soil surface from Tank 241-S-102 pump pit due to leak in jumpers connecting tank transfer lines SL-140, SN-242 during saltwell pumping.	Jumper failure + Drain plugged	F2	E2
102S-01.b3	Radioactive liquid released to the soil subsurface from leaks in transfer lines SL-140, SN-242. (Plume)	Line leak during saltwell pumping (corrosion)	F3	E2
102S-02.b1	Release of radioactive aerosols to atmosphere from Tank 241-S-102 pump pit due to flammable gas generated in pump pit igniting and burning paint off pump pit walls	Jumper leak + H2 evolution (or ammonia) + Spark	F2	E1
102S-02.b2	Release of radioactive aerosols to atmosphere from Tank 241-S-102 due to flammable gas from tank igniting in pump pit and burning paint off pump pit	H2 /Ammonia production migrates into pump pit + Spark (pumps not operating)	F2	E2
102S-02.d2	Release of radioactive aerosols to atmosphere from Tank 241-S-102 due to burning fuel flowing into pit ignited from ruptured gas tank.	Vehicle drives into pit cover puncturing gas tank + Ignition	F3	E0

Table D3.4-2. Hazardous Conditions With Potential Significant Onsite Consequences (S2).[1] (26 sheets)

ID	Hazardous Condition	Cause	Freq NC	Env Cons
102S-03.b3	Release of radioactive aerosols to atmosphere from Tank 241-S-102 due to burning fuel flowing into waste tank due to ignition of fuel from ruptured gas tank.	Vehicle drives into open riser puncturing gas tank + Ignition	F2	E2
102S-04.a3	Release of radioactive aerosols trapped in gases throughout Tank 241-S-102 waste to the atmosphere due to periodic release of toxic gases (lower energy than tank bump)	Waste growth (bump) due to chemistry within the waste coupled with crust movement	F3	E1
102S-04.e1b	Release of radioactive aerosols contained in Tank 241-S-102 vapor space to atmosphere due to due to ignition of flammable gas in tank vapor space	Concentration of H2 or Ammonia (or other flammable gasses) above LFL + Ignition source	F2	E2
102S-04.e4	Release of radioactive gases and aerosols from Tank 241-S-102 vapor space to atmosphere due to criticality	Criticality (misrouting)	F1	E1
106C-01F	Release of radioactive and/or hazardous material from Tank 241-C-106, blown out HEPA filters and/or discharge out cover blocks due to high tank pressure	Blockage of inlet, outlet and cascade lines	F2	E2
106C-01G	Release of radioactive and/or hazardous material from Tank 241-C-106 tank, due to waste reaction causing local discharge of contamination through blown HEPAs or out cover blocks	Addition of acid to tank	F2	E1
106C-01H	Release of radioactive and/or hazardous material from Tank 241-C-106, through blown HEPAs or out cover blocks due to tank boiling with vent path blocked or failed	Tank boiling with lack of vent path	F2	E1
106C-01M	Release of radioactive and/or hazardous material from Tank 241-C-106, due to high temperature in the waste tank	Exothermic, chemical reaction in tank due to inadvertent addition to tank	F2	E1
106C-01N	Release of radioactive and/or hazardous material from Tank 241-C-106 due to high temperature in tank	Criticality in waste tank	F1	E2
106C-04Aa	Release of radioactive and/or hazardous material from Tank 241-C-106 due to flammable gas content of the waste causing an exothermic reaction in waste tank	High flammable gas content in tank sludge layer due to chemical reaction	F2	E1
106C-06D	Release of contamination from Tank 241-C-106 pump pit and potential worker injury due to fire	Fire in or near pump pit due to vehicle fuel spill and burn	F2	E1
106C-06L	Release of contamination from Tank 241-C-106 pump pit due to fire/explosion affecting the structural integrity	Fire/explosion in pump pit	F2	E1
106C-10J	Release of radioactive and/or hazardous material from Tank 241-C-106 due to tank structural damage, HEPA damage caused by high temperature	Fire in or around ventilation system	F2	E3
106C-11E	Release of unfiltered tank atmosphere from Tank 241-C-106 due to damaged ductwork	Damage to ventilation ductwork upstream of filters	F3	E2
106C-11J	Release of radioactive and/or hazardous material from Tank 241-C-106 due to HEPA damage, beyond 200 F design	Exhauster heater overheat	F3	E1

Table D3.4-2. Hazardous Conditions With Potential Significant Onsite Consequences (S2).[1] (26 sheets)

ID	Hazardous Condition	Cause	Freq NC	Env Cons
106C-11K	Release of radioactive and/or hazardous material from Tank 241-C-106 due to HEPA filter damage, spread of contamination caused by high temperature in ventilation system	Fire in exhauster ductwork	F2	E1
106C-11L	Release of radioactive and/or hazardous material from Tank 241-C-106, through HEPA filter path, due to human error in installation of filter	Improper installation of HEPAs	F3	E1
106C-11M	Release of radioactive and/or hazardous material from Tank 241-C-106 due to damaged HEPA filters	Event that damages HEPAs	F3	E1
106C-110	Release of radioactive and/or hazardous material from Tank 241-C-106 due to loss of filtration	HEPA filter blowout	F2	E1
106C-12F	Release of radioactive and/or hazardous material from Tank 241-C-106 tank due to waste reaction in tank	Added chemicals to tank instead of normal water addition	F2	E2
107AN-01-LEVE01	Release of caustic material from truck tank due to leak (aerosol spray)	Open valve on truck with pressurized tank transfer.	F3	E2
107AN-01-LEVE02	Release of caustic material from truck tank due to leak (aerosol spray)	Truck tank leak	F2	E2
107AN-01-TEMP02	Spray release of caustic material from truck tank due to high temperature	Fire in gas tank	F1	E2
107AN-02-FLOW01	Release of radioactive aerosols from Tank 241-AN-107 due to surface chemical reaction	Transfer of incompatible chemical to tank via chemical addition system due to vendor or paperwork error	F3	E2
107AN-02-FLOW02	Release of toxic vapors from Tank 241-AN-107 due to surface chemical reaction	Transfer of incompatible chemical to tank via chemical addition system due to vendor or paperwork error	F3	E2
107AN-02-PRES	Release of caustic aerosol from caustic truck transfer piping due to spray leak	Piping/hose leak initiated by various causes	F3	E2
107AN-02-PRES02	Release of caustic material from transfer piping due to high pressure (aerosol spray)	Hose disconnect	F3	E1
114SX-02.b	Radioactive liquid released from tank pump pit to the ground surface due to inadvertent pumping activity (pool)	Human error (not normal activity)	F1	E2
114SX-04.b.1.b.1b	Release of radioactive aerosols from Tank 241-SX-114 head space to atmosphere due to failure of exhaust ducting from seismic event (mechanical disruption)	Ducting failure from seismic activity	F1	E1
114SX-04.c.1	Release or radioactive aerosols from Tank 241-SX-114 head space to atmosphere due to mechanical failure of exhauster HEPA filter	Plenum structure failure pierces filter	F2	E2
114SX-04.c.2.a	Release of radioactive aerosols from Tank 241-SX-114 head space to atmosphere due to exhauster HEPA filter seal failure	HEPA filter seal failure	F3	E2
114SX-04.c.2.b	Release of radioactive aerosols from Tank 241-SX-114 head space to atmosphere due to exhauster defective HEPA filter	Defective HEPA filter	F3	E2

Table D3.4-2. Hazardous Conditions With Potential Significant Onsite Consequences (S2).[1] (26 sheets)

ID	Hazardous Condition	Cause	Freq NC	Env Cons
114SX-04.c.2.c	Release of radioactive aerosols from Tank 241-SX-114 head space to atmosphere due to exhauster HEPA filter deterioration	Deteriorated HEPA filter	F3	E2
114SX-04.c.2.d	Release of radioactive aerosols from Tank 241-SX-114 head space to atmosphere due to exhauster HEPA filter installation errors	Improper installation (human error)	F2	E2
114SX-05.b.2	Release of radioactive aerosols from Tank 241-SX-114 head space to atmosphere due to sudden flashing of water added to tank for cooling	Flashing (adding cold liquid to hot tank contents)	F0	E2
114SX-05.c.2c	Release pf radioactive gases and aerosols as well as direct radiation from Tank SX-114 due to criticality	Criticality (difficult to achieve concentration needed and difficult to obtain configuration required)	F1	E1
114SX-05.d	Release of radioactive aerosols from Tank 241-SX-114 head space to atmosphere due to localized fire/explosion of flammable gas	Core Sampling through a pocket of gas large enough to exceed local LFL with ignition source (spark) creates local fire/explosion	F3	E1
204AR-01H	Release of airborne and waterborne contaminates outside building on track spur, and potential contamination in unloader room from rail car due to spilling rail car contents	Rail car rupture due to collision with other or a derailment	F2	E2
204AR-01I	Release of airborne and waterborne contaminates outside building on track spur, and potential contamination in unloader room from rail car due to leak	Rail car leak due to tanker corrosion or other degradation	F2	E2
204AR-02A	Release of liquid radioactive material and toxic chemicals outside and inside the 204AR building from the trailer due to collision which causes a spill	Tank trailer damage due to running into the building and causing the tank contents to spill	F2	E1
204AR-02B	Release of radioactive material and toxic chemicals from trailer due to structural degradation of trailer	Tank trailer damaged due to corrosion or other degradation	F2	E1
204AR-07A	Release of liquid radioactive waste and high airborne in unloading room from the Tank 241-AY-102 due to reverse pumping of Tank 241-AY-102 contents back to 204-AR	Pump in pit 02D starts and pumps back to the 204-AR building through the transfer piping and leaks	F2	E2
204AR-09A	Release of airborne and waterborne contamination from the sump pit due to ruptured piping during transfer.	Rupture of transfer piping section above the sump pit	F2	E2
204AR-09B	Release of airborne and radiation contamination in the unloader room from trailer or rail car leak due to high level in sump pit	Catastrophic leak from a large liquid source such as a trailer or rail car	F2	E2
204AR-09C	Release of airborne and radiation contamination in the unloader room from rail car due to gross overfilling of catch tank	Gross overfilling of catch tank either from large source such as the trailers or rail cars or continual pumping of transfer water through a leaky pipe	F2	E2

Table D3.4-2. Hazardous Conditions With Potential Significant Onsite Consequences (S2).[1] (26 sheets)

ID	Hazardous Condition	Cause	Freq NC	Env Cons
204AR-09D	Release of radioactive liquid waste in the unloader room from the rail car or trailer due to failed rail car or trailer	Failed tank car or rail car (initially full of liquid waste) overflowing the catch tank and sump pit	F2	E1
204AR-11F	Release of airborne radiological contamination through the ventilation stack from the unloader room atmosphere due to fire in ventilation ducting	Fire in ventilation ducting resulting in damage to the HEPA filters and release to the atmosphere	F2	E1
244AR-01.b.04	Release of radioactive aerosols from the facility exhaust stack due to filter failure	HEPA filter fails	F3	E1
244AR-01.c.09	Release of radioactive aerosols from vessel headspace into canyon atmosphere due to flammable gas ignition	Ignition of flammable gas that has collected in piping and tank dome	F2	E2
244AR-02.a.03	Release of radioactive liquid in the form of aerosols contained in a cell to the exterior of the 244-AR facility due to ignition of flammable gas	Fire/explosion from hydrogen buildup	F1	E2
244AR-02.a.07	Release of radioactive aerosols from vessel headspace to building atmosphere with eventual release outside facility due to overfilling of sump causing tank failure	Rain or snow water intrusion	F1	E2
244AR-03.a.04	Release of radioactive aerosols into cell due to ignition of flammable gas in 244-AR Vault tank headspace	Fire/explosion due to ignition of accumulated flammable gas	F2	E2
244AR-03.a.05	Release of radioactive aerosols from tanks headspace due to ventilation system blockage	Ventilation and risers blocked while jetting occurring	F2	E2
244AR-03.a.08	Release of radioactive aerosols created by boiling waste to the cell atmosphere	Steam being supplied to tank heating/cooling coils	F3	E2
244AR-03.a.09	Release of radioactive aerosols created by criticality to the cell atmosphere	Criticality in waste	F1	E2
244AR-05.a.02	Release of radioactive material from facility due to seismic event which causes building collapse without cell collapse	Seismic event damages facility structure	F2	E2
2727W-02	Release of hazardous material from 2727-W due to sodium fire	Vehicle crashes into building and ignites sodium	F1	E1
2727W-03	Release of hazardous material from 2727-W due to sodium fire	Lightning	F2	E1
2727W-04	Release of hazardous material from 2727-W due to sodium fire	Overhead power line falls through building	F1	E1
2727W-05	Release of hazardous material from 2727-W due to sodium fire	Nitrogen tank overpressurizes sodium tank, ignites sodium	F3	E1
2727W-06	Release of hazardous materials from 2727-W due to sodium-water reactions	High wind or tornado destroys building with rain/snow	F2	E1
BND-02	Release of radioactive aerosols from tank due to ignition of combustibles during preparation for bonding	Drilling holes for bonding attachments causes sparks when flammable gases or materials are present	F2	E1

Table D3.4-2. Hazardous Conditions With Potential Significant Onsite Consequences (S2).[1] (26 sheets)

ID	Hazardous Condition	Cause	Freq NC	Env Cons
CCF-01	Radioactive and hazardous release from tanks due to extended loss of ventilation (over 6 months)	Sustained loss of offsite power	F1	E2
CCF-07	Release of radioactive and hazardous materials from tank due to overfill	Disabled or unavailable staff to terminate transfer	F3	E2
CCF-20	Release of radioactive and hazardous aerosols/vapors from tanks due to chemical reactions between waste and added materials	Reactive chemical additions to two tanks	F2	E1
CDP-10	Release of radioactive contamination to soil surface from excavation or drilling in cribs, ditches or ponds that disturbs radioactive material	Excavation or drilling	F3	E2
COB-04	Release of radioactive and/or hazardous material from COB lid due to overflow of COB during transfer (pool)	Leak into COB with floor drain plugged, leak detector failed	F3	E2
COB-08	Release of radioactive and/or hazardous material from COB due to over filling of COB (pool)	Transfer pipe or riser rupture, backfilling lower part of COB then filling COB via the floor drain	F3	E2
CP-MSP-01	Release of radioactive or toxic material to soil surface (pool) from transfer line due to puncture of line during transfer	Human error caused puncture to transfer line during push operations	F1	E2
CP-MSP-08	Release of radioactive or toxic material to atmosphere from MISF Miscellaneous Inactive Storage Facilities due to flammable gas deflagration	Human error AND Mechanical failure of probe	F2	E2
CRN-03-IA	Release of radioactive and/or toxic materials from facility due to containment top collapse	Human error results in excessive weight on top of containment	F3	E1
CRN-03-IB	Release of radioactive and/or toxic materials from facility due to MISF containment collapse	Human error results in excessive weight on top of containment	F3	E2
CRN-04-IA	Release of radioactive and/or toxic materials from facility due to MISF containment collapse	Crane or rigging failures drop load resulting in large impact to top of containment	F2	E1
CRN-04-IB	Release of radioactive and/or toxic materials from facility due to MISF containment collapse	Crane or rigging failures drop load resulting in large impact to top of containment	F2	E2
CRN-05	Release of radioactive and/or toxic materials from pits and risers due to fuel tank fire in crane or support vehicle (see In-Tank Equipment Installation for tank fires)	Human error in positioning crane load	F3	E2
CRN-06	Release of radioactive and/or toxic materials from pits and risers due to fuel tank fire in crane or support vehicle (see In-Tank Equipment Installation for tank fires)	Mechanical failure in positioning crane load	F3	E2
CRN-07	Release of radioactive and/or toxic materials from pits and risers due to fuel tank fire in crane or support vehicle (see In-Tank Equipment Installation for tank fires)	Crane hits electrical lines/supplies	F3	E2

Table D3.4-2. Hazardous Conditions With Potential Significant Onsite Consequences (S2).[1] (26 sheets)

ID	Hazardous Condition	Cause	Freq NC	Env Cons
CRN-08	Release of radioactive and/or toxic materials from pits and risers due to fuel tank fire in crane or support vehicle (see In-Tank Equipment Installation for tank fires)	Lightning	F3	E2
CRN-09	Release of radioactive and/or toxic materials from ventilation system due to crane damage	Human error in positioning crane load	F3	E2
CRN-09-I	Release of radioactive and/or toxic materials from ventilation system due to damage caused by crane operation	Human error in positioning crane load	F3	E1
CRN-10	Release of radioactive and/or toxic materials from ventilation system due to crane damage	Mechanical failure in positioning crane load	F3	E2
CRN-10-I	Release of radioactive and/or toxic materials from ventilation system due to damage caused by crane operation	Mechanical failure in positioning crane load	F2	E1
CRN-11-IA	Release of radioactive and/or toxic materials from facility due to containment top collapse or equipment damage by boom failure	Human error: improper load assembly, rigging, crane overloaded	F3	E1
CRN-11-IB	Release of radioactive and/or toxic materials from facility due to equipment damage by boom failure	Human error: improper load assembly, rigging, crane overloaded	F3	E1
CRN-11-IC	Release of radioactive and/or toxic materials from facility due to containment top collapse damage by boom failure (pool)	Human error: improper load assembly, rigging, crane overloaded	F3	E2
CRN-12-IA	Release of radioactive and/or toxic materials from facility due to containment top collapse or equipment damage by boom failure	Mechanical failure: corrosion, faulty materials	F2	E1
CRN-12-IB	Release of radioactive and/or toxic materials from facility due to equipment damage by boom failure	Mechanical failure: corrosion, faulty materials	F2	E1
CRN-12-IC	Release of radioactive and/or toxic materials from facility due to containment top collapse by boom failure (pool)	Mechanical failure: corrosion, faulty materials	F2	E2
CRN-13-IA	Release of radioactive and/or toxic materials from below ground facility due to containment top collapse or equipment damage by boom failure	High wind or seismic event	F2	E1
CRN-13-IB	Release of radioactive and/or toxic materials from above ground facility due to equipment damage by boom failure	High wind or seismic event	F2	E1
CRN-13-IC	Release of radioactive and/or toxic materials from facility due to containment top collapse damage by boom failure	High wind or seismic event	F2	E2
CRN-18	Release of radioactive or toxic material from above ground tank equipment due to dropping crane load	Human error: improper load assembly, rigging, crane overloaded	F3	E1
CRN-18-I	Release of radioactive or toxic material from aboveground facility equipment due to dropping crane load	Human error: improper load assembly, rigging, crane overloaded	F3	E1

Table D3.4-2. Hazardous Conditions With Potential Significant Onsite Consequences (S2).[1] (26 sheets)

ID	Hazardous Condition	Cause	Freq NC	Env Cons
CRN-19	Release of radioactive or toxic material from above ground tank equipment due to dropping crane load	Mechanical failure: corrosion, faulty materials (filter crush)	F3	E1
CRN-19-I	Release of radioactive or toxic material from aboveground facility equipment due to dropping crane load	Mechanical failure: corrosion, faulty materials	F2	E1
CRN-20	Radioactive or toxic material release from pit or riser due to dropping crane load onto above ground tank equipment	High wind or seismic event (filter crush)	F3	E1
CRN-20-I	Release of radioactive or toxic material from aboveground facility equipment due to dropping crane load	High wind or seismic event	F2	E1
CRN-21-IB	Release of radioactive or toxic materials from aboveground facility bottom due to loss of vertical load control, dropping crane load into facility (surface pool)	Human error: improper load assembly, rigging, positioning error	F3	E2
CRN-22-IB	Release of radioactive or toxic materials from aboveground facility bottom due to loss of vertical load control, dropping crane load into facility (surface pool)	Mechanical failure: corrosion, faulty materials, hydraulics	F2	E2
CRN-23	Release of radioactive or toxic materials from tank due to loss of vertical load control, dropping crane load into tank, onto tank bottom (subsurface leak)	High wind or seismic event	F3	E3
CRN-23-IA	Release of radioactive or toxic materials from underground facility bottom due to loss of vertical load control, dropping crane load into facility (subsurface leak)	High wind or seismic event	F2	E1
CRN-23-IB	Release of radioactive or toxic materials from aboveground facility bottom due to loss of vertical load control, dropping crane load into facility	High wind or seismic event	F2	E2
CRN-25-IB	Release of radioactive or toxic material from aboveground MISF due to swinging load into equipment caused by loss of lateral load control	Human error: improper load assembly, rigging, positioning error	F3	E1
CRN-26-IB	Release of radioactive or toxic material from aboveground MISF due to swinging load into equipment caused by loss of lateral load control	Mechanical failure: corrosion, faulty materials, hydraulics, outriggers in soft soil	F2	E1
CRN-27-IB	Release of radioactive or toxic material from aboveground MISF due to swinging load into equipment caused by loss of lateral load control	Mechanical failure: corrosion, faulty materials, hydraulics, outriggers in soft soil	F2	E1
CVR-05	Release of radioactive or hazardous material through combustion or fire/explosion of materials in pit due to human error	Failure to sniff or improper sniffing	F3	E1
CVR-15-I	Release of radioactive or hazardous material from pit upon dropping or falling coverblocks or pieces of coverblocks	Coverblock hooks fail or pieces of degraded coverblock fall into pit	F3	E1
EE-11	Release of radioactive and hazardous materials from tank due to overfilling	Water line breaks and overfills tank	F2	E2

Table D3.4-2. Hazardous Conditions With Potential Significant Onsite Consequences (S2).[1] (26 sheets)

ID	Hazardous Condition	Cause	Freq NC	Env Cons
EE-17	Radioactive and hazardous material release from inactive equipment due to excavation error	Excavation into abandoned or inactive equipment	F3	E1
I-222S-1-CMP-C	Release (potential spray leak) of 222-S lab waste to atmosphere in diversion box or 244-S Pump Pit due to increased corrosion from failure to add sodium hydroxide	Human error - failure to add sodium hydroxide	F3	E2
I-222S-1-LVL-A	Release (steam) of aerosols and entrained particulates to atmosphere through ventilation due to over pressurization of 244-S DCRT caused by sending just steam to tank farm	Human error - failing to shut off steam after Tank 219-S-102 is empty	F3	E2
I-222S-1-RXN-A	Release of aerosols and/or toxic vapors from receiver tank due adverse chemical reactions from incompatible waste	Transfer of incompatible waste	F3	E2
I-222S-2-FLW-C	Release of aerosols and/or toxic vapors from receiver tank due adverse chemical reactions from incompatible waste	Human error - incorrect valve line up	F2	E2
I-222S-2-LEK-B	Release of 222-S lab waste to the atmosphere due to spray leak at the diversion box or pump pit, caused by corrosion in the pipe	Corrosion in pipe line	F1	E2
I-222S-2-LEK-C	Release of 222-S lab waste to the atmosphere due to spray leak at the rupture of the line	Inadvertent excavation of line	F2	E2
I-222S-2-LEK-E	Release of 222-S lab waste to the atmosphere due to spray leak at the diversion box or pump pit, caused by rupture at pipe connections from a seismic event	Seismic event	F2	E2
I-222S-2-PRS-A	Release (steam) of aerosols and particulates to atmosphere through ventilation due to over pressurization of 244-S DCRT caused by sending just steam to tank farm	Steam reducer valve fails open	F3	E2
I-242A-1-LEK-B	Release of waste from Feed Tank 241-AW-102 to the atmosphere due to spray leak at the diversion box or pump pit, caused by corrosion in the pipe	Corrosion in pipe line	F1	E2
I-242A-1-LEK-C	Release of waste from Feed Tank 241-AW-102 to the atmosphere due to spray leak at the rupture of the line	Inadvertent excavation of line causes spray leak	F2	E2
I-242A-1-LEK-E	Release of waste from Feed Tank 241-AW-102 to the atmosphere due to spray leak at the diversion box or pump pit, caused by rupture at pipe connections	Seismic event causes spray leak	F2	E2
I-242A-2-FLW-A	Release of aerosols to the atmosphere through unsealed cracks in the cover blocks due to over pressurization of the receiver tank and possible structural damage to the tank	Human error - pump is run at maximum speed	F3	E2
I-242A-2-FLW-B	Release of aerosols to the atmosphere through 12 inch opening in inlet station due to over pressurization of the receiver tank and possible structural damage to the tank	Human error - pump is run at maximum speed	F3	E2

Table D3.4-2. Hazardous Conditions With Potential Significant Onsite Consequences (S2).[1] (26 sheets)

ID	Hazardous Condition	Cause	Freq NC	Env Cons
I-242A-2-LEK-B	Release of slurry tank waste to the atmosphere due to spray leak at the diversion boxes or pump pit, caused by corrosion in the pipe	Corrosion in pipe line	F1	E2
I-242A-2-LEK-C	Release of slurry tank waste to the atmosphere due to spray leak at the rupture of the line	Inadvertent excavation of line causes spray leak	F2	E2
I-242A-2-LEK-E	Release of slurry tank waste to the atmosphere due to spray leak at the diversion box or pump pit, caused by rupture at pipe connections	Seismic event causes leak	F2	E2
I-242A-2-VSC-A	Release of aerosols in receiver tank due to tank burp from over concentration, potential to generate conditions similar to Tank 241-SY-101, "Tank Burp" due to hydrogen being trapped in thick solution (lower energy than tank bump)	Human error - over concentration of slurry at evaporator	F2	E2
I-242A-3-FLW-A	Release of aerosols to the atmosphere through unsealed cracks in the cover blocks due to over pressurization of the feed tank and possible structural damage to the tank	Uncontrolled pot dump at evaporator (loss of electricity or air)	F3	E2
I-242A-3-FLW-B	Release of aerosols to the atmosphere through 12 inch opening in inlet station due to over pressurization of the feed tank and possible structural damage to the tank	Uncontrolled pot dump at evaporator (loss of electricity or air)	F3	E2
I-242A-6-FLW-B	Release of diluted high level tank waste from Feed Tank 241-AW-102 caused by overfilling Tank 241-AW-102 and annulus, aggravated by an uncontrolled evaporator dump when a raw water leak occurs in evaporator condenser room	Rupture of raw water line in condenser/pump room	F3	E2
I-242A-7-FLW-A	Release of aerosols through the risers due to loss of instrument air which causes an uncontrolled evaporator dump and failure to detect changes in feed tank pressure	Compressor fails and 241-AW Tank Farm air supplied from 242-A	F1	E2
I-242A-7-FLW-B	Release of aerosols through the risers due to loss of instrument air which causes an uncontrolled evaporator dump and failure to detect changes in feed tank pressure	Valve inadvertently closed, 241-AW Tank Farm air supplied from 242-A	F1	E2
I-242A-7-FLW-C	Release of aerosols through the risers due to loss of instrument air which causes an uncontrolled evaporator dump and failure to detect changes in feed tank pressure	Filter plugged, 241-AW Tank Farm air supplied from 242-A	F1	E2
I-242S-2-FLW-A	Release of tank waste diluted with contaminated fire water to the soil due to flooding the pump room from a fire main break and pumping the water to Tank 241-SY-102 which overfills the tank and floods pit through risers	Break in fire main	F1	E2
I-242S-2-FLW-E	Release of high level waste to the ground outside the 242-S building due to unmitigated reverse flow to the pump room from Tank 241-SY-102	Human error - incorrect valve line up	F2	E2
I-242S-2-LEK-B	Release of contaminated water to the atmosphere due to spray leak at the diversion box or pump pit, caused by corrosion in the pipe	Corrosion in pipe line causes spray leak	F1	E2

Table D3.4-2. Hazardous Conditions With Potential Significant Onsite Consequences (S2).[1] (26 sheets)

ID	Hazardous Condition	Cause	Freq NC	Env Cons
I-242S-2-LEK-C	Release of contaminated water to the atmosphere due to spray leak at the rupture of the line from excavation	Inadvertent excavation of line causes spray leak	F2	E2
I-242S-2-LEK-E	Release of contaminated water to the atmosphere due to spray leak at the diversion box or pump pit, caused by rupture at pipe connections from seismic event	Seismic event	F2	E2
I-242S-4-FLW-C	Release of high level waste to the ground outside the 242-S building due to unmitigated reverse flow to the condenser room	Human error - incorrect valve line up	F2	E2
I-242S-4-FLW-D	Release of tank waste diluted with contaminated water to the soil due to flooding the condenser room which is pumped to Tank 241-SY-102 and overfills the tank and floods pit through risers	Break in fire main	F1	E2
I-242S-4-LEK-E	Release of contaminated water to the atmosphere due to spray leak at the diversion box or pump pit, caused by rupture at pipe connections from an seismic event	Seismic event causes spray leak	F2	E2
I-BPLANT-1-CMP-B	Release (spray leak) of low level waste at diversion box from transfer of low pH material resulting in increased corrosion in pipe	Human error - failure to add sodium hydroxide leads to corrosion and leak in pipe	F3	E2
I-BPLANT-2-FLW-D	Release of aerosols and/or toxic vapors from receiver tank due to transfer of incompatible waste from B Plant	Human error - communication error between B Plant and TWRS causes transfer of incompatible waste	F3	E2
I-BPLANT-2-LEK-B	Release of low level waste to the atmosphere due to spray leak at the diversion box or pump pit, caused by corrosion in the pipe	Corrosion in pipe line causes spray leak	F1	E2
I-BPLANT-2-LEK-C	Release of low level waste to the atmosphere due to spray leak at the rupture of the line from excavation	Inadvertent excavation of line causes spray leak	F2	E2
I-BPLANT-2-LEK-E	Release of low level waste to the atmosphere due to spray leak at the diversion box or pump pit, caused by rupture at pipe connections from seismic event	Seismic event causes spray leak	F2	E2
I-PFP-1-AGT-A	Release of fission product gases and aerosols from receiver tank due to potential for solids to collect in D-5, If mixed later, potential for composition of next batch to exceed Criticality Prevention Specifications (CPS); potential "Criticality Issue"	Human error or agitator fails results in criticality	F3	E2
I-PFP-1-CMP-B	Release of fission product gases and aerosols from receiver tank due to, potential for localized concentration of fissile materials in receiver tank from failure to add ferric nitrates; potential "Criticality Issue"	Failure to add ferric nitrates, results in criticality	F3	E2

Table D3.4-2. Hazardous Conditions With Potential Significant Onsite Consequences (S2).[1] (26 sheets)

ID	Hazardous Condition	Cause	Freq NC	Env Cons
I-PFP-1-CMP-D	Release of fission product gases and aerosols from receiver tank due to excess fissile material in waste, potential to exceed criticality prevention specification requirements for shipment; potential "Criticality Issue"	Excess fissile content added to waste results in criticality	F3	E2
I-PFP-2-LEK-B	Release of TRU mixed waste to the atmosphere due to spray leak at the diversion box or pump pit, caused by corrosion in the pipe	Corrosion in pipe line causes spray leak	F1	E2
I-PFP-2-LEK-C	Release of TRU mixed waste to the atmosphere due to spray leak at the rupture of the line	Inadvertent excavation of line	F2	E2
I-PFP-2-LEK-E	Release of TRU mixed waste to the atmosphere due to spray leak at the diversion box or pump pit, caused by rupture at pipe connections	Seismic event causes spray leak.	F2	E2
I-PFP-2-TMP-B	Release (steam) of aerosols and entrained particulate from 244-TX ventilation system due to saturating HEPAs with steam sending higher pressure steam to steam jet, gassing it out	Failure of steam reducer	F2	E2
I-PFP-3-LEK-B	Release of TRU mixed waste to the atmosphere due to spray leak at the diversion box or pump pit, caused by corrosion in the pipe	Corrosion in pipe line causes spray leak	F1	E2
I-PFP-3-LEK-C	Release of TRU mixed waste to the atmosphere due to spray leak at the rupture of the line	Inadvertent excavation of line	F2	E2
I-PFP-3-LEK-E	Release of TRU mixed waste to the atmosphere due to spray leak at the diversion box or pump pit, caused by rupture at pipe connections	Seismic event causes spray leak	F2	E2
I-PUREX-1-AGT-B	Release (spray leak) of TRU waste from PUREX at diversion box due to leak from increased corrosion caused by transfer of acidic waste	Human error or mechanical failure - agitator fails or is not turned on	F3	E2
I-PUREX-1-CMP-B	Release (spray leak) of TRU waste from PUREX at diversion box due to leak from increased corrosion caused by transfer of acidic waste	Human error - failure to add sodium hydroxide to low level waste results in corrosion and causes spray leak	F3	E2
I-PUREX-1-LVL-A	Release of aerosols from Tank 241-AW-105 through cracks in the cover block due to pressurizing tank from transfer of steam	Human error - failure to shut off steam jet when U-3 is empty	F3	E2
I-PUREX-2-LEK-B	Release of TRU waste from PUREX to the atmosphere due to spray leak at the diversion box or pump pit, caused by corrosion in the pipe	Corrosion in pipe line causes spray leak	F1	E2
I-PUREX-2-LEK-C	Release of TRU waste from PUREX to the atmosphere due to spray leak at the rupture of the line from inadvertent excavation	Inadvertent excavation of line causes spray leak	F2	E2
I-PUREX-2-LEK-E	Release of TRU waste from PUREX to the atmosphere due to spray leak at the diversion box or pump pit, caused by seismic event	Seismic event causes spray leak	F2	E2

Table D3.4-2. Hazardous Conditions With Potential Significant Onsite Consequences (S2).[1] (26 sheets)

ID	Hazardous Condition	Cause	Freq NC	Env Cons
I-PUREX-2-PRS-A	Release (steam) of aerosols and particulates through cracks in the cover block from the receiver tank due to tank pressurization which gases out the steam jet	Steam reducer fails	F2	E2
I-PUREX-3-AGT-B	Release (spray leak) of TRU waste from PUREX at diversion box due to leak from increased corrosion caused by transfer of acidic waste	Agitator fails or is not turned on results in corrosion and causes spray leak	F3	E2
I-PUREX-3-CMP-B	Release (spray leak) of TRU waste from PUREX at diversion box due to leak from increased corrosion caused by transfer of acidic waste	Human error - failure to add sodium hydroxide to low level waste results in spray leak	F3	E2
I-PUREX-3-CMP-E	Release of fission product gases and aerosols from receiver tank due to criticality caused by exceeding Criticality Prevention Specifications for shipment from PUREX	Transfer of L Cell sump water to Tank F-18 and eventually to the Tank Farms	F3	E2
I-PUREX-3-LVL-A	Release of aerosols from Tank 241-AW-105 through cracks in the cover block due to pressurizing tank from transfer of steam	Human error - failure to shut off steam jet when U-3 is empty	F3	E2
I-PUREX-4-FLW-B	Release (ground surface) of high level tank waste diluted with flush water from the receiver tank due to overfilling from sending excess water	Block valve on flush water inadvertently left opened or leaking	F3	E2
I-PUREX-4-LEK-B	Release of TRU waste from PUREX to the atmosphere due to spray leak at the diversion box or pump pit, caused by corrosion in the pipe	Corrosion in pipe line causes spray leak	F1	E2
I-PUREX-4-LEK-C	Release of TRU waste from PUREX to the atmosphere due to spray leak at the rupture of the line from excavation	Inadvertent excavation of line causes spray leak	F2	E2
I-PUREX-4-LEK-E	Release of TRU waste from PUREX to the atmosphere due to spray leak at the diversion box or pump pit, caused by rupture at pipe connections from seismic event	Seismic event causes spray leak	F2	E2
I-PUREX-4-PRS-A	Release of aerosols and particulates through cracks in the cover block from the receiver tank due to tank pressurization which gases out the steam jet	Steam reducer fails	F2	E2
I-TPLANT-1-CMP-B	Release (spray) of low level waste at diversion box from transfer of lower pH material resulting in increased corrosion in pipe	Human error - failure to add sodium hydroxide causes corrosion and associated spray leak	F3	E2
I-TPLANT-2-CMP-A	Release (steam) of aerosols and entrained particulates to atmosphere through ventilation due to over pressurization of 244-S DCRT caused by sending just steam to the tank farm	Human error - steam block valve inadvertently opened or failure to close valve when Tank 15-1 is low	F3	E2
I-TPLANT-2-LEK-B	Release of low level waste to the atmosphere due to spray leak at the diversion box or pump pit	Corrosion in pipe line causes spray leak	F1	E2
I-TPLANT-2-LEK-C	Release of low level waste to the atmosphere due to spray leak at the rupture of the line from excavation	Inadvertent excavation of line causes spray leak	F2	E2

Table D3.4-2. Hazardous Conditions With Potential Significant Onsite Consequences (S2).[1] (26 sheets)

ID	Hazardous Condition	Cause	Freq NC	Env Cons
I-TPLANT-2-LEK-E	Release of low level waste to the atmosphere due to spray leak at the diversion box or pump pit, caused by rupture at pipe connections from seismic event	Seismic event causes spray leak	F2	E2
I-UPLANT-1-LEK-B	Release of low level waste to the ground at the rupture of the line	Inadvertent excavation of line	F1	E2
ITK-05	Release of radioactive and/or hazardous material from point of in-tank access (non-fire, non-explosion) due to intrusive activity	Tank burps from intrusive activity	F2	E1
ITK-05-I	Release of radioactive and/or hazardous material from point of in-facility access due to gas release from in-facility waste during intrusive activity (non-fire, non-explosion)	Gas release from in-facility waste during intrusive activity	F2	E1
ITK-06	Release of radioactive and/or hazardous material from point of in-tank access (non-fire, non-explosion) due to criticality	Intrusive activity causes critical mass	F1	E2
ITK-06-I	Release of radioactive and/or hazardous material from point of in-facility access due to criticality within the in-facility waste during intrusive activity (non-fire, non-explosion)	Criticality from intrusive activity	F1	E2
ITK-08-I	Release of radioactive or toxic material from facility due to in-facility fire or explosion during intrusive activity	Exothermic reaction of incompatible materials in facility	F2	E2
ITK-09-I	Release of radioactive or toxic material from facility due to in-facility fire or explosion during intrusive activity	Failure to bond components or incorrect bonding	F2	E2
ITK-10-I	Release of radioactive or toxic material from facility due to in-facility fire or explosion during intrusive activity	Spark from equipment or tools provide an ignition source	F3	E2
ITK-11-I	Release of radioactive or toxic material from facility due to in-facility fire or explosion during intrusive activity	Lightning, range fire, or seismic event ignites facility vapors	F1	E2
ITK-FR-03	Release of radioactive aerosols from tank and/or receiver due to equipment jam in riser	Equipment becomes lodged in riser, efforts to remove pull riser out of tank causing breach of tank & receiver containment	F1	E2
ITK-FR-08	Release of radioactive aerosols/vapors from flex receiver due to structural failure	High winds tear flex receiver bag	F3	E2
ITK-FR-13	Release of radioactive aerosols/vapors from flex receiver due to buildup and ignition of flammable gas in receiver	Hydrogen gas buildup in tank/riser that travels into receiver with ignition source (spark from herculite or equipment)	F1	E2
ITK-FR-22	Release of radioactive aerosols from flex receiver due to tank gas release	Tank gas release pressurizes bag and causes bag to rupture	F1	E2
LDUA 5-40	Release of contamination from TRIC and tank riser due to damage during wind storm	High winds	F3	E1

Table D3.4-2. Hazardous Conditions With Potential Significant Onsite Consequences (S2).[1] (26 sheets)

ID	Hazardous Condition	Cause	Freq NC	Env Cons
NP-02	Radioactive and hazardous material releases from tanks and ventilation systems due to fire	Lightning strikes ventilation system	F2	E1
NP-03	Radioactive and hazardous material releases from tanks due to fire in tanks	Lightning strikes riser in tank farm	F2	E2
NP-05	Radioactive and hazardous material release from tanks, nearby ground surfaces, and ventilation systems due to above grade disturbances	High winds	F1	E2
NP-15	Radioactive and hazardous material release from isolated or abandoned equipment due to fire	Hydrogen producing chemical reactions in isolated or abandoned equipment	F3	E1
OGT-EXT3-01B	Release of radioactive or hazardous material from the primary pipe due to leak caused by truck crash into piping system	Human error, line struck by truck	F2	E2
OGT-FLOW1-02	Release of radioactive or hazardous material from pit overflow due to primary pipe leak caused by over-rated pump	Incorrect pump installed creates excessive flow and pressure on OGT system eroding EPDM pipe causing leak to secondary pipe with drain in pit plugged	F2	E2
OGT-FLOW1-03B	Release of radioactive or hazardous material from the primary pipe due to misdirected flow of waste through flush line	JR-1 (3-way valve) mispositioned to flush, two check valves fail, flush disconnect fails (check valve), and reverse flow to water truck, drum or onto ground	F1	E2
OGT-FLOW1-04	Release of radioactive or hazardous material from the primary pipe due to valve failure resulting in misdirected flow of waste through flush line to flush water supply truck	JR-1 leak (bleed-by), two check valves fail, and flush disconnect fails and pump started causing reverse flow to flush water truck tank	F1	E2
OGT-FLOW1-06	Release of radioactive or hazardous material from the DCRT due to overflow	Exceed volume available in DCRT/insufficient volume available, condition goes unnoticed until overflow occurs	F2	E2
OGT-FLOW2-01B	Release of radioactive or hazardous material from the primary pipe due to leak caused by incorrect pump installed	Incorrect pump installed creates excessive flow and isolation valve closed on secondary pipe, erosion of EPDM and pressurization of secondary pipe causing leaks from flanges gasket within concrete shield	F2	E2
OGT-FLOW2-03B	Release of radioactive or hazardous material from the primary pipe due leak caused by incorrect pump installed	Installation of incorrect pump, failure of inner pipe and isolation valves closed on secondary pipe drains causing leak from failed welds on flange within the concrete shield	F1	E2

Table D3.4-2. Hazardous Conditions With Potential Significant Onsite Consequences (S2).[1] (26 sheets)

ID	Hazardous Condition	Cause	Freq NC	Env Cons
OGT-PRES1-01	Release of radioactive or hazardous material from overflow of pit due to leak caused by high pressure	Heat up of hydro test by heat tape or high ambient temperature, high pressure results from captive fluid heat up, inner pipe damaged, leaks to secondary pipe and drains back to pits and insufficient drainage in pit	F1	E2
OGT-REAC1-01	Release of radioactive or hazardous material from overflow of pit due to primary pipe leak cause by chemical reaction	Pumping from multiple tanks to single OGT, potential for adverse chemical reactions in pipeline damaging inner pipe, leaks to secondary pipe and drains back to pits and insufficient drainage in pit	F1	E2
OGT-TEMP1-02	Release of radioactive or hazardous vapors/aerosols from the primary pipe due to spray leak caused by high temperatures	Vehicle accident above ground starts fire, melt the EPDM hose causing a leak to secondary pipe, pumping occurring, fire fails gasket and facilitates a release to atmosphere	F1	E2
OGT-TEMP1-03	Release of radioactive or hazardous material from overflow of pit due to leak caused by high temperature	High temperature flush water fails inner pipe causing leak to secondary pipe, drain to pit with insufficient drainage in pit	F1	E2
RSR-06-I	Release of radioactive or toxic material from facility due to in-facility fire or explosion during riser removal activity	Failure to bond components or incorrect bonding allows electrostatic spark	F2	E2
RSR-07-I	Release of radioactive or toxic material from facility due to in-facility fire or explosion during riser removal activity (chosen to represent all organic nitrate tanks)	Spark from failure to use non-sparking tools or sparks from welding, cutting, grinding, etc.	F3	E2
TFS-1	Release of radioactive or hazardous waste liquid from overflow of 244-S vault to the 244-S pump pit due to syphon effect on Tank 241-SY-102 (pump does not overflow)	Human Error - failure to close isolation valve (or valve malfunction) following waste transfer which allows flow to continue (syphon) when pump is stopped	F3	E2
VEH-01	Release of radioactive or toxic materials from cask due to fire caused by vehicle operation	Vehicle catches on fire	F3	E2
VEH-01-I	Release of radioactive or toxic materials from vehicle carrying MISF samples or contaminated equipment due to vehicle fire	Vehicle catches on fire	F2	E2
VEH-02	Release of radioactive or toxic material from cask due to damage to transport casks during seismic event	Seismic event	F1	E1
VEH-02-I	Release of radioactive or toxic material from MISF samples in transport casks due to seismic damage	Seismic event	F1	E1

Table D3.4-2. Hazardous Conditions With Potential Significant Onsite Consequences (S2).[1] (26 sheets)

ID	Hazardous Condition	Cause	Freq NC	Env Cons
VEH-03	Release of radioactive or toxic material from cask due to damage to transport casks during a high wind/tornado	High wind/tornado	F2	E2
VEH-03-I	Release of radioactive or toxic material from MISF samples in transport casks due to high wind/tornado damage	High wind/tornado	F2	E2
VEH-07-I	Release of radioactive or toxic material from MISF due to riser being sheared off and possibly vehicle gas tank ruptured and fire	Vehicle moving near facility risers	F3	E1
W058-FLOW01	Release of radioactive slurry to the soil surface from overflow in the SY-A or SY-B valve pit due to piping system leak (pool)	Computer failure or human error causing misrouting of material when flow path is not completely connected plus mitigative features failure	F3	E2
W058-FLOW03	Release of radioactive slurry to the soil surface from overflow in the SY-A or SY-B valve pit due to piping system leak (pool)	External leak of valve or valves to the valve pit plus mitigative features failure	F2	E2
W058-FLOW05a	Release of radioactive slurry to the soil surface from overflow in the SY-A or SY-B valve pit due to piping system leak (pool)	Failure of jumper due to misalignment (human error) plus mitigative features failure	F3	E2
W058-FLOW05b	Release of radioactive slurry to the soil surface from overflow in the SY-A or SY-B valve pit due to piping system leak (pool)	Failure of jumper due to gasket failure plus mitigative features failure	F2	E2
W058-FLOW05c	Release of radioactive slurry to the soil surface from overflow in the SY-A or SY-B valve pit due to piping system leak (pool)	Failure of jumper due to corrosion plus mitigative features failure	F2	E2
W058-FLOW07	Release of radioactive supernate to the soil surface from overflow in the SY-A or SY-B valve pit due to piping system leak (pool)	Computer failure or human error causing misrouting of material when flow path is not completely connected plus mitigative features failure	F3	E2
W058-FLOW09	Release of radioactive supernate to the soil surface from overflow in the SY-A or SY-B valve pit due to piping system leak (pool)	External leak of valve or valves to the valve pit plus mitigative features failure	F2	E2
W058-FLOW11a	Release of radioactive supernate to the soil surface from overflow in the SY-A or SY-B valve pit due to piping system leak (pool)	Failure of jumper due to misalignment (human error) plus mitigative features failure	F3	E2
W058-FLOW11b	Release of radioactive supernate to the soil surface from overflow in the SY-A or SY-B valve pit due to piping system leak (pool)	Failure of jumper due to gasket failure plus mitigative features failure	F2	E2
W058-FLOW11c	Release of radioactive supernate to the soil surface from overflow in the SY-A or SY-B valve pit due to piping system leak (pool)	Failure of jumper due to corrosion plus mitigative features failure	F2	E2
W058-FLOW13	Release of radioactive supernate to the soil surface from overflow in the SY-A or SY-B valve pit due to piping system leak (pool)	Open path for pool leak from test riser	F3	E2

Table D3.4-2. Hazardous Conditions With Potential Significant Onsite Consequences (S2).[1] (26 sheets)

ID	Hazardous Condition	Cause	Freq NC	Env Cons
W058-INTEG01a	Release of radioactive slurry to the soil surface from the underground piping between the SY-A or SY-B valve pit and a diversion box due to piping system leak	Failure of primary and encasement piping due to corrosion plus mitigative features failure	F2	E2
W058-INTEG01b	Release of radioactive slurry to the soil surface from the underground piping between the SY-A or SY-B valve pit and a diversion box due to piping system leak	Failure of primary and encasement piping due to unrecognized material flaw plus mitigative features failure	F2	E2
W058-INTEG01c	Release of radioactive slurry to the soil surface from overflow of a diversion box due to piping system leak	Failure of primary and encasement piping due to corrosion plus mitigative features failure	F2	E2
W058-INTEG01d	Release of radioactive slurry to the soil surface from overflow of a diversion box due to piping system leak	Failure of primary and encasement piping due to unrecognized material flaw plus mitigative features failure	F2	E2
W058-INTEG03a	Release of radioactive slurry to the soil surface from the underground piping between the SY-A or SY-B valve pit and a diversion box due to piping system leak	Failure of primary and encasement piping due to external event (airplane crash, volcanism, etc)	F2	E2
W058-INTEG03b	Release of radioactive slurry to the soil surface from overflow of a diversion box due to piping system leak	Failure of primary and encasement piping due to external event (airplane crash, volcanism, etc)	F2	E2
W058-INTEG05a	Release of radioactive slurry to the soil surface from the underground piping between the SY-A or SY-B valve pit and a diversion box due to piping system leak	Failure of primary and encasement piping due to external event (excavation accident) plus mitigative features failure	F2	E2
W058-INTEG05b	Release of radioactive slurry to the soil surface from overflow of a diversion box due to piping system leak	Failure of primary and encasement piping due to external event (excavation accident) plus mitigative features failure	F3	E2
W058-INTEG07a	Release of radioactive slurry to the soil surface from the underground piping between the SY-A or SY-B valve pit and a diversion box due to piping system leak	Failure of primary and encasement piping due to external event (undermining from broken fluid transfer lines in vicinity) plus mitigative features failure	F3	E2
W058-INTEG07b	Release of radioactive slurry to the soil surface from overflow of a diversion box due to piping system leak	Failure of primary and encasement piping due to external event (undermining from broken fluid transfer lines in vicinity) plus mitigative features failure	F2	E2
W058-INTEG09a	Release of radioactive slurry to the soil surface from the underground piping between the SY-A or SY-B valve pit and a diversion box due to piping system leak	Failure of primary and encasement piping due to freezing	F1	E2
W058-INTEG09b	Release of radioactive slurry to the soil surface from overflow of a diversion box due to piping system leak	Failure of primary and encasement piping due to freezing	F1	E2

Table D3.4-2. Hazardous Conditions With Potential Significant Onsite Consequences (S2).[1] (26 sheets)

ID	Hazardous Condition	Cause	Freq NC	Env Cons
W058-INTEG11a	Release of radioactive slurry to the soil surface from the underground piping between the SY-A or SY-B valve pit and a diversion box due to piping system leak	Failure of primary and encasement piping due to seismic event plus mitigative features failure	F1	E2
W058-INTEG11b	Release of radioactive slurry to the soil surface from overflow of a diversion box due to piping system leak	Failure of primary and encasement piping due to seismic event plus mitigative features failure	F1	E2
W058-INTEG13a	Release of radioactive supernate to the soil surface from the underground piping between the SY-A or SY-B valve pit and a diversion box due to piping system leak	Failure of primary and encasement piping due to corrosion plus mitigative features failure	F2	E2
W058-INTEG13b	Release of radioactive supernate to the soil surface from the underground piping between the SY-A or SY-B valve pit and a diversion box due to piping system leak	Failure of primary and encasement piping due to unrecognized material flaw plus mitigative features failure	F2	E2
W058-INTEG13c	Release of radioactive supernate to the soil surface from overflow of a diversion box due to piping system leak	Failure of primary and encasement piping due to corrosion plus mitigative features failure	F2	E2
W058-INTEG13d	Release of radioactive supernate to the soil surface from overflow of a diversion box due to piping system leak	Failure of primary and encasement piping due to unrecognized material flaw plus mitigative features failure	F2	E2
W058-INTEG14a	Release of radioactive supernate to the soil surface from the underground piping between the SY-A or SY-B valve pit and a diversion box due to piping system leak	Failure of primary and encasement piping due to external event (airplane crash, volcanism, etc) plus mitigative features failure	F2	E2
W058-INTEG14b	Release of radioactive supernate to the soil surface from overflow of a diversion box due to piping system leak	Failure of primary and encasement piping due to external event (airplane crash, volcanism, etc) plus mitigative features failure	F2	E2
W058-INTEG16a	Release of radioactive supernate to the soil surface from the underground piping between the SY-A or SY-B valve pit and a diversion box due to piping system leak	Failure of primary and encasement piping due to external event (excavation accident) plus mitigative features failure	F3	E2
W058-INTEG16b	Release of radioactive supernate to the soil surface from overflow of a diversion box due to piping system leak	Failure of primary and encasement piping due to external event (excavation accident) plus mitigative features failure	F3	E2
W058-INTEG18a	Release of radioactive supernate to the soil surface from the underground piping between the SY-A or SY-B valve pit and a diversion box due to piping system leak	Failure of primary and encasement piping due to external event (undermining from broken fluid transfer lines in vicinity) plus mitigative features failure	F2	E2
W058-INTEG18b	Release of radioactive supernate to the soil surface from overflow of a diversion box due to piping system leak	Failure of primary and encasement piping due to external event (undermining from broken fluid transfer lines in vicinity) plus mitigative features failure	F2	E2

Table D3.4-2. Hazardous Conditions With Potential Significant Onsite Consequences (S2).[1] (26 sheets)

ID	Hazardous Condition	Cause	Freq NC	Env Cons
W058-INTEG20a	Release of radioactive supernate to the soil surface from the underground piping between the SY-A or SY-B valve pit and a diversion box due to piping system leak	Failure of primary and encasement piping due to freezing	F1	E2
W058-INTEG20b	Release of radioactive supernate to the soil surface from overflow of a diversion box due to piping system leak	Failure of primary and encasement piping due to freezing	F1	E2
W058-INTEG22	Release of radioactive supernate to the soil surface from the underground piping between the SY-A or SY-B valve pit and a diversion box due to piping system leak	Failure of primary and encasement piping due to seismic event plus mitigative features failure	F1	E2
W058-INTEG24	Release of radioactive slurry to the soil surface from overflow in the SY-A or SY-B valve pit due to piping system leak	External event (airplane crash, etc)	F1	E2
W058-INTEG26	Release of radioactive slurry to the soil surface from overflow in the SY-A or SY-B valve pit due to piping system leak	Seismic event plus mitigative features failure	F1	E2
W058-INTEG28	Release of radioactive supernate to the soil surface from overflow in the SY-A or SY-B valve pit due to piping system leak	External event (airplane crash, etc)	F1	E2
W058-INTEG30	Release of radioactive supernate to the soil surface from overflow in the SY-A or SY-B valve pit due to piping system leak (pool)	Seismic event	F1	E2
W058-PRES01	Release of radioactive slurry to the soil surface from overflow in the SY-A or SY-B valve pit due to piping system leak (pool)	Water hammer plus mitigative features failure	F3	E2
W058-PRES03	Release of radioactive supernate to the soil surface from overflow in the SY-A or SY-B valve pit due to piping system leak (pool)	Water hammer plus mitigative features failure	F3	E2
XS-01-FLOW01	Release of radioactive aerosols from 244-TX DCRT due to ignition of flammable gas atmosphere	Pressure drop in transfer line releases flammable gas into DCRT atmosphere and ignition source causes deflagration	F2	E2
XS-01-FLOW05	Release of radioactive contaminated liquid from transfer piping to 244-TX-DCRT via the raw water system due to reverse flow of liquid waste (pool)	Mis-valving causes mixing of waste into raw water system that causes leak in the flush pit cover block	F2	E2
XS-01-FLOW06	Release of liquid radioactive waste from saltwell pumping transfer piping in DCRT pump pit to surface due to overflow (pool)	Open jumper in single shell tank pump pit leads to overflowing of pump pit	F3	E2
XS-01-FLOW07	Release of liquid radioactive waste to the soil from transfer piping from SST to DCRT due to leakage (plume)	Pipe failure from various causes	F3	E2
XS-01-PRES01	Release of liquid radioactive waste from damaged transfer piping to 244-TX DCRT due to over pressure (pool)	Use of wrong size pump and closed valve causes over pressure and subsequent pipe failure	F2	E2
XS-01-TEMP01	Release of steam-aerosol from transfer piping in pump pit due to steam hammer and resulting pipe damage	Extended recirculation and consequential heating of saltwell liquid with sudden opening of valve when cover block is open	F3	E2

Table D3.4-2. Hazardous Conditions With Potential Significant Onsite Consequences (S2).[1] (26 sheets)

ID	Hazardous Condition	Cause	Freq NC	Env Cons
XS-02-FLOW02	Release of aerosols and particulate from DCRT ventilation filter due to transfer of steam from PFP steam jet into DCRT headspace	Human error (failure to shut off steam jet at completion of transfer) which causes DCRT ventilation filter failure	F3	E1
XS-02-FLOW03	Release of toxic gases (oxides of nitrogen) from DCRT due to chemical reaction	Chemical reaction between sodium nitrite (DCRT) and nitric acid (PFP transfer) due to failure to adjust waste pH prior to transfer	F2	E1
XS-02-FLOW04	Release of liquid radioactive waste to soil from transfer pipe (non-pool) subsurface plume	Failure to adjust waste pH prior to transfer causes leak	F2	E2
XS-02-FLOW05	Release of liquid radioactive waste to the soil from PFP transfer piping due to pipe break	Pipe break from various causes	F3	E2
XS-03-LEVE01 XS-21-LEVE (244-S DCRT)	Release of combustion products from 244-TX DCRT due to flammable gas burn in tank atmosphere	Evaporation of DCRT contents causing decreased ability of waste to retain flammable gases and spark source	F2	E2
XS-03-LEVE02 XS-21-LEVE (244-S DCRT)	Release of fission product gases and aerosols from 244-TX DCRT due to criticality	Evaporation of DCRT contents with increased solids settling on DCRT bottom creates critical mass	F3	E2
XS-03-PRES01 XS-21-PRES (244-S DCRT)	Release of liquid aerosols from 244-TX-DCRT due to flammable gas burn in tank atmosphere	Loss of ventilation flow with accumulation of flammable gas and spark source	F2	E2
XS-03-PRES02 XS-21-PRES (244-S-DCRT)	Release of toxic vapors from 244-TX DCRT due to decreased ability to keep vapors in solution (fan on)	Heating of DCRT or chemical adjustment	F3	E1
XS-03-PRES05	Release of toxic vapors from DCRT due to increased concentrations in DCRT atmosphere	Transfer of steam from PFP causing evolution of toxic gases due to heating tank	F2	E2
XS-03-TEMP01	Release of radioactive aerosols from 244-TX DCRT headspace due to positive pressure	Chemical reaction in DCRT causes positive pressure	F2	E1
XS-03-TEMP02	Release of toxic vapor from DCRT due to chemical reaction	Chemical reaction in DCRT toxic vapor	F2	E1
XS-03-TEMP02 XS-21-TEMP (244-S-DCRT)	Release of fission product gases and aerosols from 244-TX DCRT due to criticality	Transfer of material into tank that violates criticality specification	F3	E2
XS-03-TEMP03 XS-21-TEMP (244-S-DCRT)	Release of liquid aerosols from 244-TX-DCRT due to flammable gas burn-fire/explosion in tank atmosphere	Buildup of gases, loss of ventilation, and spark source	F2	E2
XS-03-TEMP04 XS-21-TEMP (244-S-DCRT)	Release of liquid radioactive waste from 244 TX DCRT due to overflow	Freezing temperatures causing raw water line break-leak with leakage to tank causes overflow	F3	E2
XS-05-FLOW01	Release of aerosols and filter media from DCRT ventilation system due to HEPA filter damage	Replacement of exhaust fan with larger capacity fan causes HEPA filter damage	F2	E1

Table D3.4-2. Hazardous Conditions With Potential Significant Onsite Consequences (S2).[1] (26 sheets)

ID	Hazardous Condition	Cause	Freq NC	Env Cons
XS-05-TEMP01	Release to atmosphere of materials from DCRT ventilation filters and tank due to filter degradation	Fire in ventilation system due to failure of ventilation heater controls	F3	E2
XS-05-TEMP02	Release to atmosphere of materials from DCRT ventilation filters and tank due to filter degradation	Fire in ventilation system due to flammable gas buildup and ignition	F3	E2
XS-06-FLOW01	Release of fission product gases and aerosols from 244-TX DCRT due to criticality	Transfer of inadequately recirculated waste from tank due to failure to appropriately balance flow between recirculation and transfer line causing buildup of solids creating critical mass	F3	E2
XS-06-FLOW04	Release of liquid radioactive waste from transfer piping from an SST to a DCRT due to spray leak (SPUTTER) of saltwell liquor from DCRT pump pit	Pipe failure	F2	E3
XS-06-FLOW05	Release of waste from transfer pipe out of 244-TX-DCRT to the soil due to flow path to soil	Concurrent failure of transfer piping and encasement	F2	E2
XS-07-FLOW01	Release of radioactive waste to soil from transfer piping out of 244-TX DCRT due to leak in primary pipe and encasement	Excavation accident fails primary pipe and encasement	F3	E2
XS-07-FLOW02	Release of radioactive waste to soil from transfer piping out of 244-TX DCRT due to leak in primary pipe and encasement	Corrosion of inner and outer pipe	F3	E2
XS-07-FLOW03	Release of radioactive waste to soil from transfer pipe out of 244-TX DCRT due to leak in primary pipe and encasement	High structural loading from traffic or cranes cause failure of primary pipe and encasement	F3	E2
XS-07-FLOW04	Release of radioactive waste to soil from transfer piping of 244-TX-DCRT due to leak in primary pipe and encasement	Seismic event fails primary pipe and encasement	F2	E2
XS-07-FLOW05	Release of radioactive waste to soil from transfer pipe out of 244-TX DCRT due to leak in primary pipe and encasement	Undermining due to leak of nearby pipes cause failure of primary pipe and encasement	F3	E2
XS-07-FLOW06	Release of radioactive waste to soil from transfer pipe out of 244-TX-DCRT due to leak in primary pipe and encasement	Water hammer causes failure of primary pipe and encasement	F3	E2
XS-11-LEVE01	Release of radioactive waste from diversion box to surface due to overflow of transfer from 244-TX	Plugged drain and misrouting causes overflow	F3	E2
XS-11-LEVE02	Release of radioactive waste from diversion box to surface due to overflow of transfer from 244-TX	Plugged drain and open jumper causes overflow	F3	E2
XS-11-LEVE03	Release of radioactive waste from diversion box to surface due to overflow	Plugged drain and piping leak causes overflow	F3	E2
XS-12-FLOW02	Release of aerosols from Diversion Box 241-U-152 due to flammable gas deflagration	Chemical reaction of catch tank material with backflow of vapors via diversion box drain line	F1	E1

Table D3.4-2. Hazardous Conditions With Potential Significant Onsite Consequences (S2).[1] (26 sheets)

ID	Hazardous Condition	Cause	Freq NC	Env Cons
XS-12-FLOW03	Release of aerosols from Diversion Box 241-U-152 due to hydrogen deflagration	Radiolysis of catch tank material with backflow of vapors via diversion box drain line and ignition source	F1	E1
XS-12-FLOW05	Release of radioactive waste from diversion box to surface due to overflow of transfer from 244-TX	Backflow from catch tank causes overflow from diversion box	F3	E2
XS-13-PRES01	Release of radioactive aerosols from 241-U-301B catch tank due to chemical reaction	Draining of incompatible chemicals to catch tank	F3	E2
XS-13-PRES03	Release of toxic vapors due to chemical reaction from 241-U-301B	Draining of incompatible chemicals to catch tank	F2	E1
XS-13-PRES04	Release of fission product gases and aerosols from catch tank 241-U-301B due to criticality	Transfer of excess fissile material to catch tank creates critical mass	F1	E2
XS-20-FLOW01	Release of radioactive aerosols from 244-TX DCRT due to chemical reaction	Transfer of incompatible waste to 244-TX DCRT due to improper valve lineup	F3	E2
XS-20-FLOW03	Release of radioactive aerosols from 244-TX DCRT due to positive pressure caused by chemical reaction	Chemical reaction of 244-S material with contents of 244-TX caused by misrouting	F2	E2
XS-20-FLOW04	Release of toxic vapors from 244-TX DCRT due to chemical reaction with incompatible material in 244-S DCRT	Mixing contents of 244-TX and 244-S due to misrouting causes chemical reaction	F2	E2
XS-20-FLOW05	Release of fission product gases and aerosols from 244-S DCRT (not designated solids receiver) due to criticality	Transfer of waste from 244-TX DCRT due to improper valve lineup creates critical mass	F1	E2
XS-20-FLOW08	Release of radioactive waste from 244-TX DCRT to surface due to overflow	Transfer of excess waste to 244-TX DCRT due to improper valve lineup causes overflow	F3	E2
XS-20-FLOW09	Release of radioactive waste from 244S DCRT to surface due to overflow	Transfer of waste from 244-TX DCRT due to improper valve lineup causes overflow	F3	E2
XS-26-PRES XS-26-TEMP	Release of toxic vapors from Tank 241-SY-102 due to chemical reaction	Mistransfer of incompatible waste causes chemical reaction	F3	E2
XS-26-PRES XS-26-TEMP 102-AW-TEMP (FOR TK-102-AW)	Release of fission product gases and aerosols from Tank 241-SY-102 due to criticality	Transfer of critical mass of fissile material and achievement of critical geometry	F1	E2
XS-26-PRES01	Release of radioactive aerosols from Tank 241-SY-102 due to chemical reaction	Mis-transfer of incompatible waste causes chemical reaction	F3	E2
XS-26-TEMP01	Release of radioactive aerosols from Tank 241-AW-102 due to tank bump	High heat waste plus loss of cooling contributes to tank bump	F2	E2
XS-35-FLOW02	Release of radioactive waste to surface from 242-S Evaporator sump due to backflow to and overflow	Human error of leaving open flow path after emptying the sump and backflow and subsequent overflow	F3	E2

Table D3.4-2. Hazardous Conditions With Potential Significant Onsite Consequences (S2).[1] (26 sheets)

ID	Hazardous Condition	Cause	Freq NC	Env Cons
XS-37-FLOW01	Release of radioactive liquid waste from catch tank to surface due to overfilling (pool)	Leak of transfer piping with drainage to catch tank causes overflow	F3	E2
XS-37-FLOW02	Release of radioactive liquid waste to soil from transfer piping due to leak of liquid waste from concrete encasement (subsurface plume)	Leak of transfer piping with encasement leak or blocked drain to catch tank (liquid oozes out concrete encasement)	F3	E2
XS-41A-FLOW01	Release of radioactive waste from vent station nozzle pit to surface due to overflow	Catastrophic failure of vent piping causes overflow of nozzle pit	F3	E2
XS-41A-FLOW02	Release of radioactive waste to surface from vent station nozzle pit due to overflow	Vent valve left open or leaking during transfer causes overflow	F3	E2
XS-41B-LEVE01	Release of radioactive aerosols from vent station catch tank due to flammable gas fire/explosion in nozzle pit	Failure to empty catch tank with buildup of flammable gas in nozzle pit plus ignition source	F2	E2
XS-41B-LEVE03	Release of radioactive waste to surface from vent station nozzle pit due to overflow	Failure to empty catch tank, causing overflow of tank and pit due to transfer failure	F3	E2
XS-41C-LEVE01	Release of radioactive aerosols from vent station catch tank due to flammable gas fire/explosion in catch tank pit	Leak of catch tank with buildup of flammable gas in catch tank pit plus ignition source	F2	E2
XS-48-FLOW	Release of liquid waste to soil from transfer piping between B-Plant and 241-ER-152 diversion box due to leak (plume)	Piping failure from various causes	F3	E2
XS-52-FLOW01	Release of radioactive waste to surface from transfer piping to Tank 244-CR-003 due to leak (pool)	Failure of pipe from various causes	F2	E2
XS-52-FLOW02	Release of radioactive waste from Tank 244-CR-003 to surface due to overflow (pool)	Mis-valving or valve failure during cross-site transfer causes overflow	F3	E2

[1]This table was generated from a relational database of hazards information. Changes from the previous revision of this table have been independently reviewed, but are not highlighted in Redline.

Table D3.4-3. Hazardous Conditions With Potential Significant Worker Consequences (S1).[1] (34 sheets)

ID	Hazardous Condition	Cause	Freq NC	Env Cons
102AW-02-LEVE	Release of radioactive aerosols from Tank 241-AW-102 annulus due to the presence of radioactive liquid waste in Tank 241-AW-102 annulus	Primary tank leakage from various causes	F3	E1
102AW-02-LEVE02	Release of liquid radioactive waste from Tank 241-AW-102 due to leak of primary and secondary tank	Structural failure of primary tank when annulus leaks	F1	E3
102AW-02-LEVE02A	Release of radioactive aerosols from Tank 241-AW-102 annulus ventilation system due to the presence of radioactive liquid waste in the annulus	Mis-routing of transfer to annulus instead of primary tank	F3	E1
102AW-02-LEVE06	Release of radioactive liquid to soil column from Tank 241-AW-102 annulus due to leakage	Primary tank leakage from various causes combined with annulus leakage	F1	E3
102AW-02-PRES.01 XS-26-PRES.01	Personnel injured by projectile debris from catastrophic fan failure	Loss of fan due to high pressure causing fan to walk into another object and become airborne	NA	NA
102AW-03-PRES01 102AW-03-LEVE	Release of radioactive aerosols from Tank 241-AW-102 annulus due to the presence of radioactive liquid waste in Tank 241-AW-102 annulus	Leak of primary tank to annulus combined with annulus ventilation fan failure	F2	E1
102AW-03-PRES02 102AW-03-LEVE	Release of radioactive aerosols from Tank 241-AW-102 annulus due to the presence of radioactive liquid waste in Tank 241-AW-102 annulus	Leak of primary tank to annulus combined with loss of power to annulus ventilation	F2	E1
102AW-04-LEVE01	Release of radioactive aerosols from Tank 241-AW-102 central pump pit due to accumulation of radioactive liquids in the central pump pit	Leak of primary piping	F3	E1
102AW-04-LEVE02	Release of radioactive aerosols from Tank 241-AW-102 central pump pit due to accumulation of radioactive liquids in the central pump pit	Misrouting through an open jumper plus clogged drain	F3	E1
102AW-04-LEVE03	Release of radioactive aerosols from Tank 241-AW-102 central pump pit due to accumulation of radioactive liquids in the central pump pit	Dissolution of residual contamination in central pump pit caused by erroneous use of raw water	F3	E1
102AW-04-LEVE04	Release of radioactive aerosols from Tank 241-AW-102 central pump pit due to accumulation of radioactive liquids in the central pump pit	Dissolution of residual contamination in central pump pit caused by pit cleaning plus clogged drain	F3	E1
102AW-04-PRES.01	Personnel exposure higher than expected	Removal of cover block and pressure release due to loss of fan.	NA	NA
102AW-04-PRES01	Release of radioactive particulate from Tank 241-AW-102 central pump pit due to pressurization	Loss of primary tank ventilation causes pressurization of pump pit.	F3	E1
102AW-04-PRES02	Release of radioactive particulate from Tank 241-AW-102 central pump pit due to its being open to atmosphere	Removal of cover block	F3	E1
102AW-04-STRU.01	Personnel injured by falling equipment	Equipment drop during crane work	NA	NA

Table D3.4-3. Hazardous Conditions With Potential Significant Worker Consequences (SI).[1] (34 sheets)

ID	Hazardous Condition	Cause	Freq NC	Env Cons
102AW-04-STRU.02	Release of radioactive particulate from Tank 241-AW-102 central pump pit due to confinement inadequacies	Structural degradation with time	F2	E1
102AW-04-STRU01B	Release of radioactive particulate from Tank 241-AW-102 central pump pit due pump pit structural failure	Seismic-induced failure of central pump pit	F1	E1
102AW-08-COMP01	Release of radioactive aerosols from tank vapor space due to production of aerosols from sludge and migration	Chemical reactions causing agitation	F2	E1
102AW-08-COMP06	Release of toxic gases from Tank 241-AW-102 tank vapor space due to production and migration of toxic gases from sludge	Chemical reactions in waste causes production of toxic gases	F3	E1
102AW-09-COMP03	Release of toxic vapors from a separable organic layer in Tank 241-AW-102 due to fuel spill into tank	External event (fuel spill)	F3	E1
102AW-09-COMP04	Release of toxic vapors from a separable organic layer in Tank 241-AW-102	Core sampling (NPH) releases trapped vapors	F3	E1
102AW-09-COMP05	Release of toxic vapors from a separable organic layer in Tank 241-AW-102 due to error in transfer	Generator erroneous transfer of insoluble organic material	F3	E1
102AW-09-TEMP02	Release of aerosols from annulus due to leak of liquid waste into the annulus	Tank leak due to thermal stress caused by transfer of hot solution to an almost empty tank	F1	E1
102AW-13-FLOW.01	Personnel exposure due to radiation doses from contaminated pipes	Multiple valving errors and failure of backflow prevention causing reverse flow from valve pit to flush pit	NA	NA
102S-02.d3	Release of radioactive aerosols to atmosphere from Tank 241-S-102 pit due to burning fuel on top of pit caused by ignition of gas from ruptured gas tank.	Vehicle drives into pit cover puncturing gas tank + Ignition	F3	E1
102S-04.e2	Release of radioactive aerosols contained in tank vapor space to atmosphere due to generation of excessive heat	Chemical reaction in waste Addition of incompatible waste/chemical (misroute)	F2	E1
102S-06.a	Release of radioactive aerosols from Tank 241-S-102 vapor space to atmosphere due to ventilation system failure	Filter plugged	F3	E1
106C-01K	Release of radioactive and/or hazardous material from Tank 241-C-106 tank due to high temperature	Water evaporation	F3	E1
106C-01S	Release of radioactive and/or hazardous material from Tank 241-C-106 caused by low level in waste tank due to high temperature	Water evaporation	F3	E1
106C-01Sa	Release of radioactive and/or hazardous material from Tank 241-C-106, due to low tank level because of tank leak	Waste tank leak	F3	E3

Table D3.4-3. Hazardous Conditions With Potential Significant Worker Consequences (SI).[1] (34 sheets)

ID	Hazardous Condition	Cause	Freq NC	Env Cons
106C-01T	Release of radioactive and/or hazardous material from Tank 241-C-106 due to low level in waste tank	Failure to add water to tank	F3	E1
106C-01W	Release of radioactive and/or hazardous material from Tank 241-C-106, due to high level in waste tank	Level change due to barometric changes	F1	E1
106C-06A	Release of radioactive and/or hazardous material from Tank 241-C-106 pump pit, due to pump pit being opened to atmosphere	Cover blocks removed	F3	E1
106C-06F	Release (minor) of radioactive and/or hazardous material from Tank 241-C-106 pump pit, due to pump pit high level	Plugged pit drain while adding water	F3	E1
106C-06G	Release (minor) of radioactive and/or hazardous material from Tank 241-C-106 pump pit due to pump pit high level	Plugged pit drain with rain or snow melt intrusion	F3	E1
106C-06H	Release (minor) of radioactive and/or hazardous material from Tank 241-C-106 pump pit due to pump pit high level	Plugged pit drain during pit cleaning, cover blocks are off	F3	E1
106C-06K	Release of radioactive and/or hazardous material from Tank 241-C-106 pump pit due to decreased pump pit structural integrity caused by drop	Equipment drop during crane work	F3	E1
106C-10F	Release of radioactive and/or hazardous material from Tank 241-C-106, potential spread of contamination due to reverse air flow if intake HEPAs damaged	Loss of tank active ventilation	F3	E1
106C-10H	Release of radioactive and/or hazardous material from Tank 241-C-106 due to HEPA filter damage	Low ambient air temperature results in ice on filter and filter damage	F1	E1
106C-10K	Release of radioactive and/or hazardous material from Tank 241-C-106, spread of contamination, due to ventilation air intake open to atmosphere	HEPA filter breach	F3	E1
106C-10L	Release of radioactive and/or hazardous material from Tank 241-C-106, spread of contamination, due to ventilation air intake open to atmosphere	Air intake ductwork damaged	F3	E1
106C-11A	Release of radioactive and/or hazardous material from Tank 241-C-106, due to HEPA filter damage	HEPA filters plugged	F3	E1
106C-11G	Release of tank atmosphere through exhauster drain from Tank 241-C-106 due to leak or failure to add water routinely	Loss of exhauster seal pot water due to leak or failure to add water routinely	F3	E1
106C-11H	Release of radioactive and/or hazardous material from Tank 241-C-106 due to condensate backing up into filters, de-entrainer or heater	Exhauster seal pot water freezing due to loss of heat trace	F3	E1
106C-11I	Release of radioactive and/or hazardous material from Tank 241-C-106 due to moisture carryover into HEPAs causing loss of efficiency	Exhauster heater failure	F3	E1

Table D3.4-3. Hazardous Conditions With Potential Significant Worker Consequences (S1).[1] (34 sheets)

ID	Hazardous Condition	Cause	Freq NC	Env Cons
106C-11N	Release of radioactive and/or hazardous material from Tank 241-C-106, through HEPA filter path, due to filter degradation over time	HEPA filter degradation	F3	E1
106C-12A	Release of radioactive and/or hazardous material from Tank 241-C-106 due to tank falling below level limit, caused by excessive tank evaporation from high temperature	Pit drain plug, water addition fails	F3	E1
106C-12B	Release of radioactive and/or hazardous material from Tank 241-C-106 due to low tank level	Water addition tank truck breakdown	F3	E1
106C-12C	Release of radioactive and/or hazardous material from Tank 241-C-106 due to low tank level because of increased evaporation	Water addition tank truck leak	F3	E1
106C-12D	Release of radioactive and/or hazardous material from Tank 241-C-106 due to excessive tank evaporation from high temperature which causes tank to fall below level limit	Tank level instrumentation fails, does not prompt water addition	F3	E1
107AN-01-LEVE03	Release of caustic material from truck tank due to leak	Failure to secure truck	F3	E2
107AN-01-TEMP.01	Thermal hazard to personnel	Caustic in tank heated too hot at source	NA	NA
107AN-02-FLOW03	Release of concentrated caustic solution to surface from transfer piping due to leak	Caustic solution transfer line leak	F2	E2
107AN-02-TEMP01	Release of caustic material from transfer piping due to low temperature during transfer	Low temperature from truck	F2	E1
107AN-03-FLOW	Release of concentrated caustic solution to surface from transfer piping due to backflow of caustic	Low temperature causes backflow	F3	E1
114SX-04.a.1a	Radioactive aerosols released from Tank 241-SX-114 head space, via tank ventilation (requires failure of outlet filter), to the atmosphere due to exhauster failure	Exhauster failure Mechanical Low temperature (thermocouple in exhaust duct not insulated picks up radiated temperature from ductwork.)	F3	E0
114SX-04.a.1b	Radioactive aerosols released from Tank 241-SX-114 head space, via tank ventilation (requires failure of outlet filter), to the atmosphere due to exhauster failure	Filter plugged	F3	E0
114SX-04.a.4	Release of radioactive aerosols from Tank 241-SX-114 headspace to atmosphere due to inlet HEPA filter failure coupled with exhauster failure	Filter failure	F3	E1
114SX-04.b.1.a.1	Release of radioactive aerosols from Tank 241-SX-114 headspace to atmosphere due to inlet HEPA filter failure coupled with exhaust butterfly valve closure	Human error: Closure of Tank 241-SX-114 exhaust butterfly valve isolating tank from exhaust plenum	F3	E1

Table D3.4-3. Hazardous Conditions With Potential Significant Worker Consequences (S1).[1] (34 sheets)

ID	Hazardous Condition	Cause	Freq NC	Env Cons
114SX-04.b.1.b.1a	Release radioactive aerosols released from Tank 241-SX-114 head space to the atmosphere due to ventilation system ducting failure (with failed inlet filter)	Ducting failure from bad welds	F3	E1
114SX-04.b.1.c.1	Release of radioactive aerosols from Tank 241-SX-114 head space to atmosphere due to exhauster failure and multiple filter failure	Exhauster failure Fan failure Filter rupture (low differential pressure shutdown) Resulting in tank degradation	F3	E1
114SX-04.b.1.d.1	Release of radioactive aerosols from Tank 241-SX-114 head space to atmosphere due to exhauster filter plugging (requires failure of inlet filter)	Exhaust filter plugging plus inlet filter failure	F3	E1
114SX-04.b.5	Release of radioactive aerosols from Tank 241-SX-114 head space to atmosphere due to failure of exhauster HEPA filters	No ventilation flow High ambient temperature conditions Leading to filter failure	F3	E1
114SX-06.b	Personnel exposed to ionizing radiation due to lack of shielding	Inadvertent removal of tank overburden (gravel)	NA	NA
204AR-01A	Release and spread of airborne radiological contamination from the rail car due to over pressurization	Over pressure in the rail car due to chemical reaction, rupture disk fails	F3	E1
204AR-01B	Release of airborne contamination and toxic chemical exposure to worker from the rail car due to high ambient temperature	Over pressure in the rail car due to high ambient temperature, rupture disk fails	F3	E1
204AR-01C	Release of airborne contamination and toxic chemical exposure to worker from the rail car due to chemical reaction causing over pressurization	High temperature in the rail car due to chemical reaction of the rail car contents, rupture disk fails	F3	E1
204AR-01D	Release and spread of airborne contamination and toxic chemical exposure to worker from the rail car due to leaking rail car caused by high ambient temperature and over pressurization of car tank	High ambient temperature causing pressurization of rail car and possible leakage, failed rupture disk	F3	E1
204AR-01E	Release of airborne contamination and toxic chemical exposure to worker from the rail car due to damaged rupture disk	Chemical reaction or internal fire resulting in an over pressure condition on rail car	F2	E1
204AR-01F	Release of airborne contamination and toxic chemical exposure to worker from the rail car due to an over pressurization which results from a diesel fuel fire under the car	Fire from diesel fuel of the locomotive that results in an over pressure condition on the rail car, rupture disk fails	F1	E1
204AR-01G	Release of airborne and liquid contamination from overflowing catch tank due to siphoning of rail car contents	Vacuum condition on rail car results in siphoning of rail car contents to the catch tank	F2	E1

Table D3.4-3. Hazardous Conditions With Potential Significant Worker Consequences (S1).[1] (34 sheets)

ID	Hazardous Condition	Cause	Freq NC	Env Cons
204AR-01J	Release of airborne contamination from overflowing catch tank due to overfilling through priming line	Priming line inadvertently fills up rail car and overflows rail car through its vent line to the catch tank	F3	E1
204AR-01K	Release of airborne contamination from unloader room due to overflowing catch tank	During sluicing operations, fill up rail car and overflow through its vent line to the catch tank	F3	E1
204AR-02C	Release of airborne and toxic chemical exposure to worker from the rail car due to over pressurization on trailer	Chemical reaction in trailer resulting in an over pressure condition, rupture disk fails	F2	E1
204AR-02D	Release of airborne and toxic chemical exposure to worker from the rail car due to diesel fuel fire causing over pressurization on the trailer	Diesel fuel fire from the truck causing an over pressure condition in the tank trailer, rupture disk fails	F2	E1
204AR-02E	Release of radioactive material and toxic chemicals from trailer due to damage caused by trailer jack failure	Leak from tank trailer due to trailer jack failure	F3	E1
204AR-02F	Release of airborne contamination from unloader room due to overflowing catch tank	Priming line inadvertently fills up trailer and overflows trailer through vent line to the catch tank	F3	E1
204AR-03A	Release of contamination and airborne release around the catch tank area and chemical exposure in mechanical equipment room from catch tank or Sodium Nitrate Tank due to failed tank	Sodium Nitrite Tank #2 either fails or has a drain valve open and empties its contents to the floor drains in the mechanical equipment room	F3	E1
204AR-03B	Release of airborne contamination around the catch tank area and chemical exposure in mechanical equipment room from the Sodium Nitrite Tank #2 due to overfilling and spilling to catch tank.	Sodium Nitrite Tank #2 overfilled and contents spilled into floor drains	F3	E1
204AR-03C	Release of airborne contamination in unloader room and chemical exposure to worker from overfilled catch tank due to tank failure.	Sodium Nitrite Tank #2 tank failure (leak at bottom) filling the catch tank with potential for airborne	F2	E1
204AR-04A	Release of airborne and waterborne contamination from high level in the catch tank due to Sodium Hydroxide Tank #3 failure	Sodium Hydroxide Tank #3 failure or drain valve open which empties contents into the floor drains	F3	E1
204AR-04B	Release of airborne contamination around the catch tank area and chemical exposure in mechanical equipment room from the Sodium Hydroxide Tank #3 and catch tanks due to overfilling of the Sodium Hydroxide Tank	Sodium Hydroxide Tank #3 overfilled and contents spilled into the floor drains	F3	E1
204AR-04C	Release of chemicals to the mechanical equipment room environment from the Sodium Nitrite Tank due to adding chemicals too quickly	Adding caustic chemicals too quickly to the tank - human error	F3	E1
204AR-04D	Release of sodium hydroxide particulates from the Sodium Hydroxide Tank due to thermal stress to piping and eventual valve leakage of Sodium Hydroxide Tank piping	Adding too much sodium hydroxide resulting in high temperatures	F3	E1

Table D3.4-3. Hazardous Conditions With Potential Significant Worker Consequences (SI).[1] (34 sheets)

ID	Hazardous Condition	Cause	Freq NC	Env Cons
204AR-04E	Release of sodium hydroxide particulates from the Sodium Hydroxide Tank due to damage to the chemical addition pump diaphragm	Adding steam heat to the coils resulting in high temperatures	F3	E1
204AR-04F	Release of airborne and waterborne contamination from high level in the catch tank due to Sodium Hydroxide Tank failure	Sodium Hydroxide Tank #3 failure (leak at bottom) filling the catch tank with potential for airborne	F2	E1
204AR-05A	Release of toxic chemicals to mechanical equipment room from chemical addition piping due to large leak in chemical addition piping	Large leak in the chemical addition piping during the transfer process	F2	E1
204AR-05B	Release of toxic chemicals and worker exposure from chemical addition piping due to over pressure of piping and subsequent damage	Over pressure while running chemical addition pump due to dead heading the pump	F3	E1
204AR-05C	Release of Tank 241-AY-102 liquid radioactive waste to the mechanical equipment room from Tank 241-AY-102 due to pumping and reversing flow from Tank 241-AY-102 to the 204-AR facility	Reverse flow of transfer piping fluid through the chemical addition piping in the mechanical equipment room	F2	E1
204AR-06A	Release of liquid radioactive waste to the unloader room or caustic chemicals to the mechanical equipment room from the priming water piping or transfer piping due to over pressurization of piping	Raw water supply pressure higher than normal	F3	E1
204AR-06B	Release of liquid radioactive waste to the unloader room or caustic chemicals to the mechanical equipment room from the priming water piping or transfer piping due to over pressurization of piping	Water hammer in priming piping from raw water supply	F3	E1
204AR-06C	Release of airborne contamination from unloader room due to overflowing catch tank	High flow through the priming line and transfer piping due to misalignment which fills up the rail car or trailer and overflows it to the catch tank	F3	E1
204AR-07B	Release of contaminated water to encasement outside of 204-AR building and floor drains inside building from the transfer piping due to over pressure and leakage from raw water flush	Over pressure of raw water through transfer piping during post transfer flush	F3	E1
204AR-07C	Release of airborne and spread of contamination from the transfer piping due to leak from improper valve lineup	Leaking transfer piping due to transfer pump being dead headed (e.g., a valve in the transfer line is closed)	F2	E1
204AR-09E	Release of airborne contamination and increased radiation levels from catch tank due to blocked catch tank ventilation and over pressure of catch tank	A heat source is in the catch tank and the overflow and vent of the catch tank are blocked off or obstructed, resulting in a catch tank over pressure	F2	E1
204AR-09F	Release of airborne contamination and increased radiation levels from catch tank due to blocked catch tank ventilation and over pressure of catch tank	Ventilation to the catch tank is blocked off with heaters on, resulting in a catch tank high pressure	F3	E1

Table D3.4-3. Hazardous Conditions With Potential Significant Worker Consequences (S1).[1] (34 sheets)

ID	Hazardous Condition	Cause	Freq NC	Env Cons
204AR-09H	Release of airborne and waterborne contamination in the unloader room from transfer piping and sump pit due to floating the catch tank and damaging piping	Rupture of raw water line piping above sump pit, causing sump pit to fill before catch tank	F2	E1
204AR-11A	Release of airborne radioactivity from unloader room due to loss of confinement caused by power failure	Loss of confinement due to power failure and total loss of ventilation fan	F3	E1
204AR-11B	Release of airborne radioactivity from unloader room due to loss of confinement caused by low ventilation flow	Loss of confinement due to low ventilation flow	F3	E1
204AR-11C	Release of airborne contamination from the unloader room due to failure of ventilation fan	Failure of EF-1 fan resulting in loss of confinement	F3	E1
204AR-11D	Release of airborne contamination from the unloader room due to blocked ventilation flow	No ventilation flow because of damper closed	F3	E1
204AR-11E	Release of airborne contamination from the unloader room due to plugged ventilation flow	No ventilation flow because of plugged HEPA filter	F3	E1
213 W-01	Release of radioactive and/or hazardous materials in 213-W work room due to error in repackaging or instrument repair	Handling error (forklift, spills, etc)	F3	E1
213 W-02	Release of radioactive and/or hazardous materials in 213-W work room due to error in repackaging or instrument repair	Failure of tools	F3	E1
213 W-03	Release of radioactive and/or toxic materials from 213-W due to fire in ventilation system	Electrical fault in ventilation or monitoring system	F2	E1
213 W-04	Release of radioactive and/or hazardous materials in 213-W work room due to fire	Human error (handling, smoking, hot tools)	F2	E1
213 W-05	Release of radioactive and/or hazardous materials in 213-W work room due to fire	Electrical or mechanical fault in tools, heating system, or hydraulics	F2	E1
213 W-06	Release of radioactive and/or toxic materials from 213-W due to fire in ventilation system	Lightning	F2	E1
213 W-07	Release of radioactive and/or toxic materials from 213-W due to structural failure of building	Seismic event	F1	E1
213 W-08	Release of radioactive and/or toxic materials from 213-W due to structural failure of building	High winds or tornado	F2	E1
213 W-09	Release of radioactive and/or toxic materials from 213-W due to structural failure of building	Loss of control of vehicle in vicinity of building	F3	E1
244AR-01.a.03	Radioactive aerosols released from tank headspace exit building through the inlet side of the canyon ventilation system due to mechanical failure	Failure of vessel venting with open vents to cell atmosphere and jetting operations occurring plus failure of exhaust fans	F3	E1

Table D3.4-3. Hazardous Conditions With Potential Significant Worker Consequences (S1).[1] (34 sheets)

ID	Hazardous Condition	Cause	Freq NC	Env Cons
244AR-01.b.01	Radioactive aerosols released from tank headspace and exit building through the inlet side of the canyon ventilation system due to mechanical failure	Fan Failure with jetting occurring	F3	E1
244AR-01.b.02	Radioactive aerosols released from tank headspace and exit building through the inlet side of the canyon ventilation system due to mechanical failure	HEPA filter plugged with jetting occurring	F3	E1
244AR-01.b.03	Radioactive aerosols released from tank headspace and exit building through the inlet side of the canyon ventilation system due to human error	Damper closed with jetting occurring	F3	E1
244AR-01.c.01	Release of radioactive aerosols from vessel headspace into canyon atmosphere due to vessel ventilation failure	Plugged vessel ventilation system filters	F3	E0
244AR-01.c.02	Release of radioactive aerosols from vessel headspace into canyon atmosphere due to ventilation system failure	Vessel ventilation system fan shutdown or failure	F3	E0
244AR-01.c.03	Release of radioactive aerosols from vessel headspace into canyon atmosphere due to human error	Valve closed in exhaust flow path	F3	E0
244AR-01.c.07	Release of radioactive aerosols from vessel headspace into canyon atmosphere due to human error	All inlets to tank sealed with pumping of tank occurring	F2	E0
244AR-01.c.08	Release of radioactive aerosols from vessel headspace into canyon atmosphere due tank rupture	Plugged tank vents with gas evolution in tank contents	F3	E0
244AR-01.c.10	Release of radioactive aerosols from vessel headspace into canyon atmosphere due to plugged ventilation system	Air purge operating with ventilation system plugged	F3	E0
244AR-01.c.11	Release of radioactive aerosols from vessel headspace into canyon atmosphere due to ventilation system filter plugging	Air heaters off (steam supplied)	F3	E0
244AR-01.c.13	Release of radioactive aerosols from vessel headspace into canyon atmosphere due to ventilation system filter plugging	Air heater off with significant heat generating waste in tanks	F2	E0
244AR-02.a.08	Release of radioactive liquid into cells due to jumper leak causing release of aerosols through cracks	Jumper leak (general)	F3	E0
244AR-02.a.09	Release of radioactive liquid to soil from leaking sump filled by leaking jumper	Jumper leak (general)	F3	E2
244AR-02.a.10	Release of radioactive liquid into cells due to jumper leak	Jumper (B Plant to AY Tank Farm through cell) leak	F3	E0
244AR-02.a.11	Release of radioactive liquid to soil from leaking sump filled by leaking jumper	Jumper (B Plant to AY Tank Farm through cell) leak	F3	E2

Table D3.4-3. Hazardous Conditions With Potential Significant Worker Consequences (SI).[1] (34 sheets)

ID	Hazardous Condition	Cause	Freq NC	Env Cons
244AR-02.a.12	Release of radioactive liquid into cells due to tank leak	Tank leak	F3	E0
244AR-03.a.03	Release of radioactive aerosols into cell due to collapse of tank	Complete sealing of all risers with vessel ventilation system piping blocked and pumping of tank occurring	F1	E1
244AR-03.a.06	Release of radioactive aerosols from tanks headspace due to steam pressure control failure for jetting system	Jetting operation with failure of jetting steam pressure regulation	F3	E1
244AR-03.a.07	Release of radioactive aerosols from tanks headspace due to air purge pressure control failure	Air purge with blocked ventilation and risers and failure of air pressure control	F2	E1
244AR-03.a.13	Release of radioactive aerosol being jetted from tank or sump due to overflow into sump	Jetting activities moving material from sump or another tank	F3	E0
244AR-03.a.14	Release of radioactive liquid being jetted from tank or sump due to overflow of tank	Inter-facility tank transfers	F3	E0
244AR-03.a.18	Release of radioactive aerosols from tank due to seismic event	Seismic event	F2	E0
244AR-04.a.01	Release of radioactive aerosols in sump due to disturbance of radioactive material by falling crane	Seismic event	F2	E0
244AR-05.a.01	Weak roof structure permits person to fall through roof	Aging (roof)	NA	NA
244AR-06.a.02	High activity radioactive material exposes person to ionizing radiation	Tank ventilation heater coil failure	NA	NA
244AR-07.a.01	Radioactive contamination contained in cells moved out of cell area into canyon area due to steam pressure control failure	Failure of PRV during jetting activities coupled with failure of ventilation systems	F2	E1
244AR-07.a.02	Radioactive contamination back flow into steam system due to steam supply failure	Steam supply failure	F3	E1
244AR-07.a.03	Radioactive contamination back flow into steam system due to compressed air failure	Steam supply failure and air blow failure	F3	E1
244AR-07.a.04	Exposure to low concentrations of radioactive material	Excess water used in steam jet flush	F3	NA
244AR-PH01	Water hammer during setup for jetting	Condensate in the lines coming into contact with steam	NA	NA
244AR-PH02	Asphyxiation due to entry into confined space	Lack of oxygen due to corrosion, decomposition or fire/explosion	NA	NA
244AR-PH03	Contamination of personnel with radioactive material	Radioactive contamination in canyon or sample gallery being disturbed by personnel entry	NA	NA
244AR-PH04	Person falls from elevated surface	Roof weakness (more than 2 stories high)	NA	NA
244AR-PH05	Person falls from elevated surface	Crane maintenance activities	NA	NA

Table D3.4-3. Hazardous Conditions With Potential Significant Worker Consequences (S1).[1] (34 sheets)

ID	Hazardous Condition	Cause	Freq NC	Env Cons
244AR-PH06	Person falls from elevated surface	Walking over weak filter vault roof	NA	NA
244AR-PH07	Person falls from elevated surface	Ladder climbing	NA	NA
244AR-PH08	Person comes in contact with rotating equipment	Maintenance work on rotating equipment	NA	NA
244AR-PH09	Person comes in contact with rotating equipment	Process operations activities	NA	NA
244AR-PH10	Person injured by failure of equipment during over speed event	Equipment malfunction	NA	NA
244AR-PH11	Personnel injury from contact with energized circuits or faulted equipment	Insulation failure	NA	NA
244AR-PH12	Personnel injury from contact with energized circuits or faulted equipment	Maintenance activities	NA	NA
244AR-PH13	Personnel injury from contact with energized circuits or faulted equipment	Mechanical damage to insulation	NA	NA
244AR-PH14	Personnel injury due to electrical fire	Insulation failure	NA	NA
244AR-PH15	Personnel injury due to electrical fire	Overload conditions, breaker failure, sparking in flammable atmosphere	NA	NA
244AR-PH16	Personnel exposure to insulation or construction materials containing asbestos	Disturbance from: fire, maintenance, wind, aging, water intrusion	NA	NA
244AR-PH17	Personnel exposed to toxic or corrosive materials	Maintenance and operations activities combined with leakage such as pipe failure, pump failure or valve packing leaks	NA	NA
244AR-PH18	Personnel injured by high pressure gas bottles becoming projectiles	Malfunction of bottle regulator	NA	NA
244AR-PH19	Personnel injured by high pressure gas bottles becoming projectiles	Improper storage and transport	NA	NA
2727W-01	Release of hazardous materials from 2727-W due to sodium reactions with limited water	Water enters through roof vents when tanks not sealed	F2	E1
90D-01	Release of radioactive and toxic aerosols/vapors from 90 Day Storage Pad due to container breach	Container breach from internal chemical, thermal or radiolysis reactions; corrosion, freeze-thaw cycles	F3	E1
90D-02	Release of radioactive and toxic aerosols/vapors from 90 Day Storage Pad due to container breach	Container breach from external impact from handling error, forklift, handling equipment airborne missile from wind, seismic	F3	E1
90D-03	Release of radioactive and toxic aerosols/vapors from 90 Day Storage Pad due to container breach	Container breach from airborne missile from wind, or from a seismic event	F3	E1

Table D3.4-3. Hazardous Conditions With Potential Significant Worker Consequences (S1).[1] (34 sheets)

ID	Hazardous Condition	Cause	Freq NC	Env Cons
90D-04	Release of radioactive and toxic aerosols/vapors from 90 Day Storage Pad due to fire or explosion	Waste ignition from spontaneous combustion, incompatible wastes, heat from sun, waste handling or other human activities	F3	E1
90D-05	Release of radioactive and toxic aerosols/vapors from 90 Day Storage Pad due to fire or explosion	External events cause waste ignition (range fires, lightning, seismic event, airplane crash)	F1	E1
90D-06	Release of radioactive and toxic aerosols/vapors from Intermediate Holding Area due to container breach	Container breach from internal chemical, thermal or radiolysis reactions; corrosion, freeze-thaw cycles	F3	E1
90D-07	Release of radioactive and toxic aerosols/vapors from Intermediate Holding Area due to container breach	Container breach from external impact from handling error, forklift, handling equipment airborne missile from wind, seismic	F3	E1
90D-08	Release of radioactive and toxic aerosols/vapors from Intermediate Holding Area due to container breach	Container breach from airborne missile from wind, or from a seismic event	F3	E1
90D-09	Release of radioactive and toxic aerosols/vapors from Intermediate Holding area due to fire/explosion	Waste ignition from spontaneous combustion, incompatible wastes, heat from sun, waste handling or other human activities	F2	E1
90D-10	Release of radioactive and toxic aerosols/vapors from Intermediate Holding Area due to fire/explosion	Natural Phenomena cause waste ignition (range fires, lightning, seismic event)	F1	E1
90D-11	Release of radioactive and toxic aerosols/vapors from waste transport vehicle due to loss of waste confinement	Failure to secure waste, vehicle accident, improper packaging, waste reactions	F3	E1
BND-01	Industrial hazards (lifting, bending, tool accidents; creates tripping hazard)	Failure to follow safe work practices, equipment failures	NA	NA
BND-01-I	Injury of worker from (lifting, bending, tool accidents; creates tripping hazard) due to bonding activities	Failure to follow safe work practices, equipment failures	NA	E1
BND-02-I	Injury of worker from ignition of combustibles due to preparation for bonding	Drilling holes for bonding attachments causes sparks which is a hazard	F2	E1
CCF-02	Radioactive and hazardous release from tanks due to short term loss of ventilation	Loss of offsite power	F3	E1
CCF-03	Degraded ventilation performance at 702-A due to condensed water vapors on HEPAs	Sustained loss of water supply (month)	F3	E0
CCF-04	Degraded ventilation performance at 702-A due to condensed water vapors on HEPAs	Sustained loss of steam supply	F3	E0
CCF-14	Personnel illness or asphyxiation due to air supply faults	SCBA air supply of poor quality	NA	NA

Table D3.4-3. Hazardous Conditions With Potential Significant Worker Consequences (S1).[1] (34 sheets)

ID	Hazardous Condition	Cause	Freq NC	Env Cons
CCF-15	Degraded operations, increased down time, possible personnel injury due to supply of inferior parts	Faulty parts or equipment supplied (e.g. o-rings, seals, electronics, HEPAs, pressure regulators, etc)	NA	NA
CCF-16	Subsurface releases of radioactive or hazardous material due to leaks in multiple tanks	Tanks, tank penetrations and tank components deteriorate due to corrosion	F3	E3
CDP-01	Release of radioactive contamination to soil surface from crib or ditch due to animal intrusion	Animal intrusion into crib or ditch	F3	E1
CDP-03	Release of radioactive contamination to soil surface from inactive pond due flooding in crib or ditch	Flooding	F3	E1
CDP-05	Release of radioactive contamination to atmosphere from inactive pond due to high wind/tornado disturbing radioactive contamination in crib or ditch	High winds/tornados	F2	E1
CDP-06	Release of radioactive contamination to atmosphere from inactive pond due to high wind/tornado disturbing inactive pond	High winds/tornadoes	F3	E0
CDP-08	Release of airborne radioactive contamination from contaminated vegetation due to fire in weed growth on top of cribs or ditches	Range fire	F3	E1
CDP-09	Driver error during drive-by causes injury to personnel	Driver error	NA	NA
COB-02	Release of radioactive and/or hazardous material from COB due to spray leak	Flange, gasket or valve, spray leak with COB lid in place	F3	E2
COB-03	Release of radioactive and/or hazardous material from COB due to spray leak	Piping leak into COB due to chemical reaction degrading pipe, lid in place	F3	E2
COB-05a	Release of radioactive and/or hazardous material from COB due to existing contamination inside COB and lid removed	Inspection of COB	F3	E1
COB-05b	Release of radioactive and/or hazardous material from COB due to existing contamination inside COB and lid off during high wind	High wind with COB cover off	F3	E1
COB-05c	Release of radioactive and/or hazardous material from COB due to flooding	Flooding of COB due to rain/snow melt	F3	E1
COB-05d	Release of radioactive and/or hazardous material release from COB due to vehicle accident	Vehicle accident involving COB	F3	E1
COB-05e	Release of radioactive and/or hazardous material from COB due to seismic event	Seismic event	F3	E1
COB-05f	Release of radioactive and/or hazardous material from COB due to existing contamination inside COB and COB lid off	Human error leaving COB lid off	F3	E1

Table D3.4-3. Hazardous Conditions With Potential Significant Worker Consequences (S1).[1] (34 sheets)

ID	Hazardous Condition	Cause	Freq NC	Env Cons
COB-06a	Release of radioactive and/or hazardous material from COB due to COB caisson pressurized	Weather heatup with HEPA filter plugged	F3	E1
COB-06b	Release of radioactive and/or hazardous material from COB due to COB caisson pressurized	Leak into COB with HEPA filter plugged	F3	E1
COB-07	Release of radioactive and/or hazardous material from COB due to reverse flow through COB from adjacent transfer line	COB setup is such that a transfer through the adjacent transfer line backflows through the COB drain line into the primary transfer line that the COB is attached to	F2	E1
CP-GRT-01	Personnel exposure to contaminated pipe string due to removal of pipe during grouting	Contaminated soil in pipe	F3	E0
CP-MSP-02	Release of radioactive or toxic material to soil (plume) remaining subsurface from transfer line due to puncture of line during transfer	Human error caused puncture to transfer line during push operations	F3	E3
CP-MSP-04	Release of radioactive or toxic material to soil (plume) remaining subsurface from waste tank due to puncture of tank	Human error - Undetected deflection of drill string pipe causes breach of tank	F1	E3
CP-MSP-09	Release of isotope source to the soil surface due to load drop	Human Error caused load drop	F3	E0
CP-MSP-10	Release of isotope source to the soil surface due to load drop	Mechanical failure caused load drop	F2	E0
CP-MSP-11	Release of radioactive material to the soil surface due to crushed sensor package	Human Error: Heavy load inadvertently set on top of sensor package	F3	E1
CP-RMV-01	Release of radioactive or toxic material to soil (plume) remaining subsurface from inactive transfer line damaged during push operations	Human error caused puncture to inactive transfer line during push operations	F3	E2
CP-RMV-02	Personnel exposure to high level waste contamination on surface of pipe string due contact with leaking waste	Human error caused puncture to inactive transfer line during push operations	F3	E0
CP-RMV-04	Personnel exposure to radiation through push pipe due to puncture of tank dome	Human error results in removal of sample canister containment	F3	E1
CP-SET-01	Release of radioactive or toxic material from above ground structure due to load movement	Mechanical failure of equipment causes load to swing into above ground structure	F3	E1
CP-SET-02	Release of radioactive or toxic material from above ground structure due to load movement	Human error causes load to swing into above ground structure	F3	E1
CP-SET-03	Release of radioactive or toxic material from above ground structure due to load movement	High wind causes load to swing into above ground structure	F1	E1
CP-SET-09	Release of isotope source from the MSP to the soil surface due to load drop	Human error causes load drop	F3	E1
CP-SET-10	Release of isotope source from the MSP to the soil surface due to load drop	Mechanical failure causes load drop	F2	E1

Table D3.4-3. Hazardous Conditions With Potential Significant Worker Consequences (S1).[1] (34 sheets)

ID	Hazardous Condition	Cause	Freq NC	Env Cons
CP-SET-11	Release of radioactive material from the MSP to the soil surface due to crushing of the sensor package	Human error: Heavy load is inadvertently set on top of the sensor package	F3	E1
CP-SSP-02	Release of radioactive or toxic material to soil (plume) remaining subsurface from transfer line due to puncture of line during transfer	Human error caused puncture to transfer line during push operations	F3	E3
CP-SSP-04	Release of radioactive or toxic material to soil (plume) remaining subsurface from waste tank due to puncture of tank	Human error - Undetected deflection of drill string pipe causes breach of tank	F1	E3
CP-SSP-06	Personnel exposure to contaminated soil sample while removing sampling canister from pipe sleeve	Human error	F3	E0
CP-SSP-07	Personnel exposure to contaminated soil sample while removing sampling canister from pipe sleeve	Mechanical failure	F2	E0
CP-SSP-08	Personnel exposure to contaminated soil sample while removing sampling canister from pipe sleeve	High wind	F2	E0
CP-SSP-09	Personnel exposure to contaminated pipe string caused by failure of sampling canister soil catcher to close properly	Mechanical failure	F3	E0
CP-SSP-10	Personnel exposure to puff release of contaminated dust (particulates) caused by air movement as the sample canister is withdrawn from pipe sleeve	Contaminated inner tube	F3	E1
CP-SSP-11	Release of contamination to environment due to dropping of the sample canister during transfer of sample from pipe to the shipping cask	Human error - workers drop sample canister or fail to handle properly	F3	E1
CP-SSP-12	Release of contamination to environment due to dropping of the sample canister during transfer of sample from pipe to the shipping cask	Mechanical failure of the sample canister	F3	E1
CP-SSP-13	Release of contamination to environment due to dropping of the sample canister during transfer of sample from outer push pipe to the shipping cask	High wind	F3	E1
CP-SSP-14	Release of contamination to environment due to dropping of the repackaged soil sample container	Human error - workers drop sample canister or fail to handle properly	F3	E1
CP-SSP-15	Release of contamination to environment due to dropping of the repackaged soil sample container	High wind	F2	E1
CP-SSP-19	Release of radioactive material to the soil surface due to rupture of the probe capsule	Human error: Results in package being ruptured when vehicle runs over the probe	F2	E1
CRN-01	Release of radioactive and/or toxic materials from riser due to breach by crane movement	Human errors or failure to follow safe work practices	F3	E1

Table D3.4-3. Hazardous Conditions With Potential Significant Worker Consequences (S1).[1] (34 sheets)

ID	Hazardous Condition	Cause	Freq NC	Env Cons
CRN-01-I	Release of radioactive and/or toxic materials from riser breach due to crane movement	Human errors or failure to follow safe work practices	F3	E1
CRN-02	Release of radioactive and/or toxic materials from riser due to breach by crane movement	Mechanical failures of crane (brakes, throttle)	F3	E1
CRN-02-I	Release of radioactive and/or toxic materials from riser breach due to crane movement	Mechanical failures of crane (brakes, throttle)	F2	E1
CRN-05-I	Release of radioactive and/or toxic materials from surface contamination and fuel tank on crane or support vehicle due to fuel tank fire (see In-Facility Equipment Installation for facility fires)	Human error in positioning crane load	F3	E1
CRN-06-I	Release of radioactive and/or toxic materials from surface contamination and fuel tank on crane or support vehicle due to fuel tank fire (see In-Facility Equipment Installation for facility fires)	Mechanical failure in positioning crane load causes crane fuel tank rupture and fire	F3	E1
CRN-07-I	Release of radioactive and/or toxic materials from surface contamination and fuel tank on crane or support vehicle due to fuel tank fire (see In-Facility Equipment Installation for facility fires)	Crane hits electrical lines/supplies	F2	E1
CRN-08-I	Release of radioactive and/or toxic materials from surface contamination and fuel tank on crane or support vehicle due to fuel tank fire (see In-Facility Equipment Installation for facility fires)	Lightning	F1	E1
CRN-14	Boom failure leads to worker injury or exposure	Human error: improper load assembly, rigging, crane overloaded	NA	NA
CRN-14-I	Injury of worker from boom failure due to human error	Human error: improper load assembly, rigging, crane overloaded	NA	E1
CRN-15	Boom failure leads to worker injury or exposure	Mechanical failure: corrosion, faulty materials	NA	NA
CRN-15-I	Injury of worker from boom failure due to mechanical failure	Mechanical failure: corrosion, faulty materials	NA	E1
CRN-16	Boom failure leads to worker injury or exposure	High wind or seismic event	NA	NA
CRN-16-I	Injury of worker from boom failure due to high wind or seismic	High wind or seismic event	NA	E1
CRN-17	Release of radioactive or toxic material from tanks due to power failure from crane hitting power lines/supplies	Human error: improper load assembly, rigging, crane positioning	F3	E1
CRN-17-I	Injury of worker from electricity due to crane hitting powerlines/supplies	Human error: improper load assembly, rigging, crane positioning	NA	E1

Table D3.4-3. Hazardous Conditions With Potential Significant Worker Consequences (SI).[1] (34 sheets)

ID	Hazardous Condition	Cause	Freq NC	Env Cons
CRN-24	Carbon monoxide from crane accumulates in pits or temporary confinement (greenhouse, etc)	Oxygen deficient atmosphere and failure to provide adequate ventilation, Failure to sniff or improper sniffing	NA	NA
CRN-24-I	Injury of worker from carbon monoxide accumulation in pits or temporary confinement (greenhouse, etc) due to crane motor exhaust	Failure to provide adequate ventilation,!Failure to sniff or improper sniffing	NA	E1
CRN-25	Loss of lateral load control, swinging load into personnel or equipment	Human error: improper load assembly, rigging, positioning error	NA	NA
CRN-25-IA	Injury of worker from swinging load into personnel due to loss of lateral load control	Human error: improper load assembly, rigging, positioning error	NA	E1
CRN-26	Loss of lateral load control, swinging load into personnel or equipment	Mechanical failure: corrosion, faulty materials, hydraulics, outriggers in soft soil	NA	NA
CRN-26-IA	Injury of worker from swinging load into personnel due to loss of lateral load control	Mechanical failure: corrosion, faulty materials, hydraulics, outriggers in soft soil	NA	E1
CRN-27	Loss of lateral load control, swinging load into personnel or equipment	High wind or seismic event	NA	NA
CRN-27-IA	Injury of worker from swinging load into personnel due to loss of lateral load control	High wind or seismic event	NA	E1
CVR-01	Release (greater than expected) of radioactive or hazardous material from pit due to lifting cover blocks	Failure to monitor or improper monitoring	F3	E1
CVR-01-I	Release of greater than expected amount of radioactive or hazardous material from pit upon lifting coverblocks due to monitoring failure	Failure to monitor or improper monitoring	F3	E1
CVR-02	Release (greater than expected) of radioactive or hazardous material from pit due to lifting cover blocks	Mechanical failure of equipment in pit (corrosion, leaks, etc)	F3	E1
CVR-02-I	Release of greater than expected amount of radioactive or hazardous material from pit upon lifting coverblocks due to mechanical failures	Mechanical failure of equipment in pit (corrosion, leaks, etc)	F3	E1
CVR-03	Release (greater than expected) of radioactive or hazardous material from pit due to lifting cover blocks	Wind or dust devil	F3	E1
CVR-03-I	Release of greater than expected amount of radioactive or hazardous material from pit upon lifting coverblocks due to windy conditions	Wind or dust devil	F3	E1
CVR-04	Release (greater than expected) of radioactive or hazardous material from pit due to earthquake lifting cover blocks	Seismic event	F1	E1
CVR-04-I	Release of greater than expected amount of radioactive or hazardous material from pit upon lifting coverblocks due to seismic event	Seismic event	F2	E1

Table D3.4-3. Hazardous Conditions With Potential Significant Worker Consequences (SI).[1] (34 sheets)

ID	Hazardous Condition	Cause	Freq NC	Env Cons
CVR-05-I	Release of radioactive or hazardous material from pit due to combustion or explosion of materials in pit	Failure to sniff or improper sniffing	F1	E1
CVR-06	Person falls in pit sustaining injury or exposed to surface radiation in pit	Failure to erect fence or failure to erect securely	NA	NA
CVR-06-I	Injury of worker from falling into pit due to missing or improperly installed fence possibly resulting in personnel exposure	Failure to erect fence or failure to erect securely	NA	E1
CVR-07	Person falls in pit sustaining injury or exposed to surface radiation in pit	Person leans over fence too far	NA	NA
CVR-07-I	Injury of worker from falling into pit due to human error possibly resulting in personnel exposure	Person leans over fence too far	NA	E1
CVR-08	Person falls in pit sustaining injury or exposed to surface radiation in pit	Fence failure	NA	NA
CVR-08-I	Injury of worker from falling into pit due to fence failure possibly resulting in personnel exposure	Fence failure	NA	E1
CVR-09	Person falls in pit sustaining injury or exposed to radiation	Seismic event or high wind/tornado	NA	NA
CVR-09-I	Injury of worker from falling into pit due to seismic event or high winds possibly resulting in personnel exposure	Seismic event or high wind/tornado	NA	E1
CVR-10	Person(s) asphyxiated	Oxygen deficient atmosphere and failure to sniff or improper sniffing	NA	NA
CVR-10-I	Injury of worker from asphyxiation due to pit atmosphere	Failure to sniff or improper sniffing	NA	E1
CVR-11	Person(s) asphyxiated	Oxygen deficient atmosphere and fresh air supply faults	NA	NA
CVR-11-I	Injury of worker from asphyxiation due to fresh air supply faults	Fresh air supply faults	NA	E1
CVR-12-I	Release of radioactive or hazardous material from pit upon lifting coverblocks due to incorrect spraying of fixative	Spraying of fixative (soil cement) causes spray of material out of pit	F3	E1
CVR-13-I	Release of radioactive or hazardous material from pit upon lifting coverblocks due to open nozzles or risers in pit	Open nozzles or risers in pit with radioactive or hazardous material inside	F3	E1
CVR-14-I	Injury of worker from biological hazards (spiders, snakes, etc.) due to open nozzles or risers in pit	Open nozzles or risers in pit with biological hazards (spiders, snakes, etc.) inside	F3	E1
DCN-01	Decontamination personnel are contaminated or exposed	Failure of PPE	NA	NA
DCN-01-I	Injury of worker from contamination or exposure of decontamination personnel due to failed PPE	Failure of PPE	NA	E1

Table D3.4-3. Hazardous Conditions With Potential Significant Worker Consequences (S1).[1] (34 sheets)

ID	Hazardous Condition	Cause	Freq NC	Env Cons
DCN-02	Release of radioactive or toxic material outside immediate area from equipment removed from tank due to decontamination of equipment	Miss direction of cleaning spray (human error)	F3	E1
DCN-02-IA	Release of radioactive or toxic material outside immediate area from equipment being decontaminated due to spray misdirection	Misdirection of cleaning spray (mechanical failure of spray ring)	F2	E1
DCN-02-IB	Release of radioactive or toxic material outside immediate area from equipment being decontaminated due to spray misdirection	Misdirection of cleaning spray (mechanical failure of spray ring)	F2	E1
DCN-03	Decon personnel are contaminated, aerosol release outside immediate area	Seismic event	F1	E1
DCN-03-I	Decontamination personnel are contaminated, release of aerosol outside immediate area from equipment being decontaminated due to seismic event	Seismic event	F2	E1
DCN-04	Decon personnel are contaminated, aerosol release outside immediate area	Wind/tornado	F2	E1
DCN-04-I	Decontamination personnel are contaminated, release of aerosol outside immediate area from equipment being decontaminated due to wind	Wind/tornado	F2	E2
DCN-05-I	Injury of worker from contact with tools due to human error during decontamination activities	Human error	NA	E1
DCN-06	Personnel exposure higher than expected	More contamination than expected	NA	NA
DCN-06-I	Injury of worker from higher than expected exposure due to unknown contamination	More contamination than expected	NA	E1
DCN-07-I	Injury of worker from exposure to asphyxiant due to PPE failure	PPE failure or absence in confined space	NA	E1
EE-02	Release of radioactive contaminants from Tank Farms due to external fires	Range fire	F3	E1
EE-03	Release of radioactive and hazardous materials from tanks due to loss of active ventilation	Dam collapse	F2	E1
EE-06	Release of radioactive and hazardous materials from tank farm due to external fires	On-site rail accident involving flammable materials	F2	E1
EE-09	Surface flooding at tank farm	Water line breaks and causes flooding at tank farm	F3	E0
EE-10	Release of radioactive and hazardous materials from tanks due to loss of tank integrity	Water line breaks, saturates subsurface, and hydrostatic head causes tank to float	F0	E3
EE-12	Washout of soils surrounding a transfer pipe	Water main to evaporator or steam plant breaks	NA	E0
EE-14	Worker injury due to electrocution	Excavation into power source	NA	NA

Table D3.4-3. Hazardous Conditions With Potential Significant Worker Consequences (SI).[1] (34 sheets)

ID	Hazardous Condition	Cause	Freq NC	Env Cons
EE-15	Washout of soils resulting in sink hole due to excavation error	Excavation into water line	NA	NA
GRN-01	Industrial hazards (lifting, bending, trips and falls, tool operations)	Human errors	NA	NA
GRN-01-I	Injury of worker from (lifting, bending, tool accidents; creates tripping hazard) due to temporary confinement activities	Human errors	NA	E1
GRN-02	Industrial hazards (lifting, bending, trips and falls, tool operations)	Mechanical failure of equipment, tools	NA	NA
GRN-02-I	Injury of worker from (lifting, bending, trips and falls, tool operations) due to mechanical failures	Mechanical failure of equipment, tools	NA	E1
GRN-03-I	Injury of worker from asphyxiants in greenhouse due to collection of asphyxiants before removal	Human error	NA	E1
I-222S-1-CMP-A	Release of 222-S lab waste from transfer line due to leak from rapid corrosion caused by transfer of pH 1 solution	Human error - failure to add sodium hydroxide	F3	E1
I-222S-2-FLW-A	Release (steam) of aerosols and particulates to the atmosphere due to reverse flowing steam into Tank 219-S-102 which saturates the HEPAs	Block valve inadvertently closed at tank farms and transfer via this line	F3	E1
I-242A-2-CMP-A	Release (potential for leak) to tank annulus (secondary confinement) caused by damage to feed tank due to overfilling of tank	Valve failure or inadvertently opened valve	F3	E1
I-242A-4-FLW-A	Release of diluted high level waste to the ground through risers after unmitigated over filling of Tank 241-AW-102 and annulus with condensate	Tube rupture of raw water in condenser	F3	E1
I-242A-6-FLW-A	Release of diluted high level waste to the ground through risers after unmitigated over filling of Tank 241-AW-102 and annulus with raw water	Rupture of raw water line in condenser/pump room	F3	E1
I-242A-6-FLW-C	Release of contaminated aerosols to the 242-A Evaporator building through the drain lines, potential worker hazard	Higher vacuum at evaporator than at tank farms	F3	E0
I-242A-7-CMP-A	Release of aerosols through the risers due to potential to get glycol into instrument air and pressure monitoring system, potential for pressure gages to fail and inability for operators to detect tank pressurization	Compressor head leaks 241-AW Tank Farm air supplied from 242-A, a tank pressurization event for a release	F1	E1
I-242A-7-PRS-A	Personnel hazard from ruptured compressed air line	Failure of compressor unloading switch due mechanical failure or incorrect setting during maintenance	F2	E0
I-242S-1-PRS-A	Release of airborne contaminates through cracks due to over pressurization of 242-S building and contamination of control room where tank farm controls are located	Exhaust fan failure	F3	E1

Table D3.4-3. Hazardous Conditions With Potential Significant Worker Consequences (S1).[1] (34 sheets)

ID	Hazardous Condition	Cause	Freq NC	Env Cons
I-242S-1-TMP-A	Release of contaminated water to the ground outside of the 242-S Evaporator due to unmitigated leak in the pump room from the fire protection system's frozen and ruptured line	Low ambient temperature freezes and breaks pipe	F3	E1
I-242S-2-FLW-B	Release of contaminated water to condenser room increasing contamination in the condenser room due to overfilling Tank 241-C-100	Human error - incorrect valve line up	F2	E0
I-242S-4-FLW-B	Release of high level waste to the 242-S condenser room due to reverse flow from Tank 241-SY-102 caused by improper valve line up	Human error - incorrect valve line up	F2	E0
I-242S-4-LEK-B	Release of contaminated water to the atmosphere due to spray leak at the condenser room, caused by corrosion in the pipe	Corrosion in pipe line	F3	E0
I-242S-4-LEK-C	Release of contaminated water to the atmosphere due to spray leak at the rupture of the line from excavation	Inadvertent excavation of line causes spray leak	F2	E0
I-242S-5-CMP-A	Release of aerosols through the risers from various tanks due to loss pressure monitoring system caused by glycol in the instrument air and results in failure of pressure gages and inability of operators to detect tank pressurization	Compressor head leaks, tank pressurization event to get a release	F2	E1
I-242S-5-CMP-B	Release of aerosols through the risers from various tanks due to loss of instrument air to pressure monitoring system caused by glycol damage desiccant which plugs the filter, if pressure gages fail, inability for operator to detect tank pressurization	Compressor head leaks, tank pressurization event to get a release	F2	E1
I-242S-5-CMP-C	Release of aerosols through the risers from various tanks due to desiccant plugging filter resulting in loss of instrument air to pressure monitoring system causing pressure gages to fail and inability for operators to detect tank pressurization	Clogged filter cutting off air supply, tank pressurization event to get a release	F2	E1
I-242S-5-CMP-D	Release of aerosols through the risers from various tanks due to release of desiccant into instrument air which damages the pressures gages and causes the inability of operators to detect tank pressurization	Blow out Filter damaging instrument air, tank pressurization event to get a release	F2	E1
I-242S-5-FLW-A	Release of aerosols through the risers from various tanks due to loss of instrument air to pressure monitoring system which causes the pressure gages to fail and the inability for operators to detect tank pressurization	Compressor fails, tank pressurization event to get a release	F2	E1
I-242S-5-FLW-B	Release of aerosols through the risers from various tanks due to loss of instrument air to pressure monitoring system which causes pressure gages to fail and the inability for operators to detect tank pressurization	Block valve inadvertently closed, tank pressurization event to get a release	F2	E1

Table D3.4-3. Hazardous Conditions With Potential Significant Worker Consequences (SI).[1] (34 sheets)

ID	Hazardous Condition	Cause	Freq NC	Env Cons
I-242S-5-FLW-C	Release of aerosols through the risers from various tanks due to loss of instrument air to pressure monitoring system which causes pressure gages to fail and the inability for operators to detect tank pressurization	Filter plugged, tank pressurization event to get a release	F2	E1
I-242S-5-PRS-A	Personnel hazard due to rupture of compressed air line	Human error - failure of compressor unloading switch due to incorrect setting during maintenance	F2	E0
I-242T-3-FLW-A	Release of high level waste to the ground surface by overflowing the "new" diversion box caused by opened or leaking valve	Block valve inadvertently opened or leaking	F3	E1
I-242T-4-FLW-A	Release of high level waste to the ground surface from overflowing the "new" diversion box due to failure of 242-T building and rupture of tanks in 242-T	Catastrophic failure of the building due to aging effects	F3	E1
I-BPLANT-1-TMP-A	Release of aerosols from pressurizing receiver tank due to transfer of hot material from Tank 24-1 to receiver tank	Human error - sending steam to Tank 24-1, inadvertently transferring to tank farms	F2	E1
I-BPLANT-2-FLW-C	Release (ground surface) of low level waste from overflow of receiver tank to pits due to transfer of excessive low level waste from B Plant	Human error - filling Tank 24-1 while transferring to tank farms, receiver tank at maximum administrative level	F1	E1
I-PFP-1-LVL-A	Release (underground) of TRU mixed waste at DCRT pit due to potential to send steam vapor to 244-TX-DCRT, potential for thermal expansion to damage transfer pipe and leak to encasement pipe which drains to DCRT pit	Human error - failing to stop transfer to 244-TX when Tank D-5 is empty	F3	E1
I-PFP-2-TMP-A	Release of TRU mixed waste at DCRT pit due to potential to send steam vapor to 244-TX-DCRT steam jet gassing it out, potential for thermal expansion to damage transfer pipe	Failure of steam reducer causes spray leak	F2	E1
I-PFP-3-FLW-C	Release of TRU mixed waste from 244-TX overfilling due to transfer error	Transferring from Tank D-7 or Tank D-8 to Tank D-5 while transferring from Tank D-5 to 244-TX	F3	E1
I-PUREX-1-TMP-A	Release from Tank 241-AW-105 through cracks in the cover block due to pressurizing tank from addition of hot waste to the tank	Human error - adding caustic (sodium hydroxide) to waste or transferring to U-3 via a steam jet and transferring from U-3 to Tank 241-AW-105 before the waste cools	F3	E1
I-PUREX-2-PRS-B	Release of aerosols through cracks in the cover block due to pressurizing the receiver tank from an extended air purge of the transfer line	Extended air purge after transfer (mechanical failure)	F3	E1
I-PUREX-2-PRS-C	Personnel exposure due to vacuum pulling radioactive material back to operating gallery, worker hazard at PUREX (dose concern)	Failure to air purge line after transfer (mechanical failure)	F2	E0

Table D3.4-3. Hazardous Conditions With Potential Significant Worker Consequences (SI).[1] (34 sheets)

ID	Hazardous Condition	Cause	Freq NC	Env Cons
I-PUREX-3-TMP-A	Release of aerosols from Tank 241-AW-105 through cracks in the cover block due to pressurizing tank from addition of hot waste	Human error - adding caustic (sodium hydroxide) to waste or transferring to U-3 via a steam jet and transferring from U-3 to Tank 241-AW-105 before the waste cools	F3	E1
I-PUREX-4-PRS-B	Release of aerosols through cracks in the cover block due to pressurizing the receiver tank from an extended air purge of the transfer line	Extended air purge after transfer (mechanical failure)	F3	E1
I-PUREX-4-PRS-C	Personnel exposure due to vacuum to pulling radioactive material back to operating gallery, worker hazard at Purex (dose concern)	Failure to air purge line after transfer (mechanical failure)	F2	E0
I-PUREX-5-FLW-A	Release of aerosols through cracks in cover block due to pressurizing receiver tank caused by transferring waste with steam which heats the waste	Multiple deactivation locks removed and valves opened or multiple valves leaking	F3	E1
I-PUREX-5-FLW-B	Release of aerosols from receiver tank due to fire caused by transfer of organic from PUREX	Organic material present in Tank R-8	F2	E1
I-PUREX-6-FLW-B	Release (ground surface) of liquid waste in Catch Tank 302-A diluted with flush water due to overfilling the tank and the pump pit and/or the diversion box due to improper valve line up of flush water	Multiple flush water block valves inadvertently opened or leaking	F2	E1
I-PUREX-6-FLW-C	Release of high level tank waste due to overfilling Tank 302-A into the diversion box and into an open nozzle which directs the flow to other tanks in the tank farm	Multiple flush water block valves inadvertently opened or leaking	F2	E1
I-TPLANT-1-TMP-A	Release of aerosols from pressurizing receiver tank due to transfer of hot material from Tank 15-1 to receiver tank	Human error - sending steam to Tank 15-1 and inadvertently transferring to tank farms	F2	E1
I-TPLANT-2-FLW-B	Release of low level waste from overflow of receiver tank to pits due to transfer of excessive low level waste from T Plant	Human error - filling Tank 15-1 while transferring to tank farms and receiver tank at maximum administrative level	F1	E1
I-UPLANT-1-RAN-A	Release of contaminated rain water to the ground surface from overfilling catch tank and diversion box due to severe rain	Severe Rain	F2	E1
ITK-01	Radioactive and/or hazardous material release from point of in-tank access (non-fire, non-explosion) due to intrusive activity	Chemical/thermal reaction of materials in equipment/waste	F2	E1
ITK-01-I	Release of radioactive and/or hazardous material from point of in-facility access due to chemical/thermal reaction (non-fire, non-explosion)	Chemical/thermal reaction of materials in equipment/waste	F3	E1
ITK-02	Radioactive and/or hazardous material release from point of in-tank access (non-fire, non-explosion) due to intrusive activity	Pressurized equipment fails in tank and increases tank pressure	F2	E1

Table D3.4-3. Hazardous Conditions With Potential Significant Worker Consequences (S1).[1] (34 sheets)

ID	Hazardous Condition	Cause	Freq NC	Env Cons
ITK-02-I	Release of radioactive and/or hazardous material from point of in-facility access due to equipment pressurization release event (non-fire, non-explosion)	Pressurized equipment fails in facility and increases facility pressure	F1	E1
ITK-03	Release of radioactive and/or hazardous material from point of in-tank access (non-fire, non-explosion) due to intrusive activity	Contaminated equipment removed or reused	F3	E1
ITK-03-I	Release of radioactive and/or hazardous material from point of in-facility access due to equipment removal (non-fire, non-explosion)	Contaminated equipment removed or reused	F3	E1
ITK-04	Release of radioactive and/or hazardous material from point of in-tank access (non-fire, non-explosion) due to earthquake or high wind with open access	Seismic event or high wind when access open	F3	E1
ITK-04-I	Release of radioactive and/or hazardous material from point of in-facility access due to seismic event or high wind (non-fire, non-explosion)	Seismic event or high wind when access open	F2	E1
ITK-07	Radioactive and/or hazardous material release from tank below grade (non-fire, non-explosion) due to intrusive activity	Dropped equipment in tank from human error or equipment failures (also see crane operations) Penetration of tank with linear-force, high pressure, or rotational equipment from human error or equipment failure	F3	E3
ITK-07-IA	Release of radioactive and/or hazardous material from facility below grade due to breach of facility confinement (non-fire, non-explosion)	Dropped equipment in facility from human error or equipment failures (also see crane operations) Penetration of facility confinement with linear-force, high pressure, or rotational equipment from human error or equipment failure	F2	E1
ITK-07-IB	Release of radioactive and/or hazardous material from facility at surface due to breach of facility confinement (non-fire, non-explosion)	Dropped equipment in facility from human error or equipment failures (also see crane operations) Penetration of facility confinement with linear-force, high pressure, or rotational equipment from human error or equipment failure	F2	E2
ITK-FR-01	Release of radioactive or hazardous material from flex receiver due to flushing with insufficient drainage	Riser not drained correctly or drain clogged causing plugging of riser	F3	E1
ITK-FR-02	Release of radioactive or hazardous material from flex receiver due to equipment jam in riser and non-procedural efforts to dislodge	Equipment becomes lodged in riser upon retrieval and non-procedural efforts to remove provide release path for tank material and/or flush water	F3	E1
ITK-FR-05	Release of radioactive or hazardous material from flex receiver due to structural failure	Human error tears flex receiver bag	F3	E1

Table D3.4-3. Hazardous Conditions With Potential Significant Worker Consequences (S1).[1] (34 sheets)

ID	Hazardous Condition	Cause	Freq NC	Env Cons
ITK-FR-06	Release of radioactive or hazardous material from flex receiver due to structural failure	Equipment failure/misalignment tears flex receiver bag (crane operation, hydraulic jack stand)	F3	E1
ITK-FR-07	Release of radioactive or hazardous material from flex receiver due to structural failure	Structural degradation	F3	E1
ITK-FR-09	Release of radioactive or hazardous material from flex receiver due to mechanical equipment failure	Failure of automatic cinch or inappropriate tightening of cables, condition goes unnoticed and receiver is sheared	F2	E1
ITK-FR-10	Release of radioactive or hazardous material from flex receiver due to mechanical equipment failure	Failure of cinching cables causing loss of containment after receiver is sheared	F2	E1
ITK-FR-11	Release or radioactive or hazardous material from flex receiver due to loss of hydraulics	Hydraulic power is lost while bag is being sealed resulting in failure of seal and leak path from bag	F1	E1
ITK-FR-12	Release or radioactive or hazardous material from flex receiver due to loss of hydraulics	Mechanical failure or inadequate operating pressure of hydraulics while bag is being sealed resulting in failure of seal and leak path from bag	F1	E1
ITK-FR-14	Release of radioactive or hazardous material from flex receiver due to leak from flanges	Non-acceptable torque on bolts connecting bellows - torque too low not enough pressure for adequate seal, to high destroys seal material	F3	E1
ITK-FR-15	Release of radioactive or hazardous material from flex receiver due to errors in installation	Incorrect installation of receiver provides release path (misalignment of bellows)	F3	E1
ITK-FR-16	Release of radioactive or hazardous material from flex receiver due to containment failure during transfer	Failure of cinched end/receiver material and secondary containment bag during transfer of equipment to trailer	F2	E1
ITK-FR-17	Release of radioactive or hazardous material from flex receiver due to leak from bag	Flaw in bag construction provides leak path for material	F2	E1
ITK-FR-18	Release of radioactive or hazardous material from flex receiver due to damage from operation of hydraulic jacks	Hydraulic jacks on assembly stand are operated while assembly is bolted to flange damaging flex receiver or riser creating release path	F3	E1
ITK-FR-20	Release of radioactive or hazardous material from flex receiver due to wrong bag being used	Containment bag is too short to hold equipment being withdrawn from tank, condition goes unnoticed until containment is lost	F3	E1
ITK-FR-21	Release of radioactive or hazardous material from flex receiver due to operation in extreme weather	Operation in cold weather compromises strength of flex receiver, equipment breaks providing release path	F3	E1

Table D3.4-3. Hazardous Conditions With Potential Significant Worker Consequences (SI).[1] (34 sheets)

ID	Hazardous Condition	Cause	Freq NC	Env Cons
ITK-FR-23	Release of radioactive or hazardous material from flex receiver due to equipment failure	Plexiglass window on receiver breaks causing release path	F3	E1
ITK-FR-24	Release of radioactive aerosols from flex receiver due to cutter misoperation damaging metal housing	Cutter cuts through containment (metal housing), venturi effect spread aerolized waste outside of containment (cutter not turned off in time, water pressure/flow too high, or cutting spread increased because of abrasive characteristics)	F2	E0
ITK-FR-25	Release of radioactive or hazardous vapors due to pump or water supply failure	Loss of cutting water due to pump or water supply failure provides open pathway from tank through silica hopper	F2	E0
ITK-FR-26	Release of radioactive or hazardous material from flex receiver due to leak from bag	Equipment mispositioned in receiver bag creating inappropriate seal and leak	F3	E1
ITK-FR-27	Release of radioactive or hazardous material from flex receiver due to containment breach during transfer	Unable to lock lifting ring onto skid, equipment falls off skid ripping bag and creating a release path	F2	E1
ITK-FR-28	Release of radioactive or hazardous material from flex receiver due to containment breach during transfer	Receiver trailer falls over with bagged equipment attached ripping bag and creating release path	F3	E1
LDUA 1-10	Worker exposure due to leak of waste into LDUA components	Line plug	F3	E0
LDUA 1-11	Worker exposure due to leak of waste into LDUA components	Line break	F3	E0
LDUA 1-34	Worker exposure due to operation error or mechanical failure	Operator error or mechanical failure	F3	E0
LDUA 2-13	Worker exposure due to leak of waste into LDUA components	Line plug	F3	E0
LDUA 2-14	Worker exposure due to leak of waste into LDUA components	Line break	F3	E0
LDUA 2-50	Worker injury due to equipment damage	Human error, software bug	F3	E0
LDUA 2-53	Worker exposure due to contamination in LDUA	LDUA contamination - due to in-tank activities	F3	E0
LDUA 2-54	Worker injury due to industrial accidents	Industrial accidents	F3	E0
LDUA 3-1	Release of radioactive aerosols from the TRIC due to filter plug and pressurization	TRIC filter inlet plugs (dust, ice, etc.)	F3	E1
LDUA 3-15	Release of radioactive aerosols from the TRIC due to filter plug and pressurization	HEPA filter plugs with frozen condensation	F3	E1
LDUA 3-19	Worker injury due to general industrial hazards	General industrial hazards (e.g. during end effector change out)	F3	E0

Table D3.4-3. Hazardous Conditions With Potential Significant Worker Consequences (S1).[1] (34 sheets)

ID	Hazardous Condition	Cause	Freq NC	Env Cons
LDUA 3-2	Release of contamination from LDUA due to loss of containment	Door not sealed, loss of glove	F3	E1
LDUA 3-20	Worker injury due to electric shock	Electric shock hazards during hook-up and maintenance	F3	E0
LDUA 3-21	Release of contamination to ground from LDUA due to impact from pressurized water/decontamination system	500-psi water (from decontamination system) causes impact hazards	F3	E1
LDUA 3-22	Release of contamination from riser and TRIC due to loss of confinement	Riser valve open while end effectors being placed in TRIC	F3	E1
LDUA 3-23	Release or radioactive aerosols from riser due to spark igniting flammable gas	Plug gauge (carbon steel) becomes stuck in riser during riser characterization	F3	E1
LDUA 3-24	Release of contamination from TRIC due to load drop	TRIC dropped from crane	F3	E1
LDUA 3-25	Release of contamination from LDUA due to incorrect installation	VPM adapter, HEPA, Gloves, Door, incorrectly installed/sealed (leaks)	F3	E1
LDUA 3-28	Release of contamination from riser due to high winds	High winds stress riser	F3	E1
LDUA 3-4	Worker exposure due to purge system overpressure - increased contamination in TRIC	Purge system overpressure (VPM auxiliary hookup)	F3	E0
LDUA 3-5	Worker exposure due to loss of decontamination water flow	Loss of decontamination water flow	F3	E0
LDUA 3-7	Worker exposure due to plug in decontamination line resulting in poor decontamination	Decontamination water line plugs due to solids	F3	E0
LDUA 4-10	Worker exposure due to ignition of flammable gas inside VPM	Loss of supply air from VPM outer tube.	F3	E0
LDUA 4-11	Worker injury due to blow out of housing panel	Supply pressure on with the VPM housing gate closed	F3	E0
LDUA 4-27	Release of contamination due to thermal degradation of VPM housing	Thermal expansion/contraction of atmosphere in housing while in storage	F3	E1
LDUA 4-30	Release of contamination due to corrosion of VPM	Poor decontamination, caustic waste contacts arm, causes corrosion of VPM	F3	E1
LDUA 4-39	Worker exposure due to loss of computer controls/ requires manual retrieval of mast	Loss of computer	F3	E0
LDUA 4-40	Worker exposure due to insufficient decontamination	Mast tubes not sufficiently decontaminated prior to removal	F3	E0
LDUA 4-43	Worker injury due to industrial hazards	Industrial hazards during maintenance	F3	E0
LDUA 4-8	Worker exposure due to leak of waste into LDUA components	Line plug	F3	E0
LDUA 4-9	Worker exposure due to leak of waste into LDUA components	Line break	F3	E0

Table D3.4-3. Hazardous Conditions With Potential Significant Worker Consequences (S1).[1] (34 sheets)

ID	Hazardous Condition	Cause	Freq NC	Env Cons
LDUA 5-17	Worker injury due to inadvertent motion of valve	Operator error, improperly positioned valves	F3	E0
LDUA 5-21	Worker injury due to shock load damaging equipment	Shock load causes damage	F3	E0
LDUA 5-23	Release of hazardous material to environment from truck battery due to inadvertent spill/potential ignition	Truck battery acid spill, deflagration	F3	E1
LDUA 5-29	Release of contamination from LDUA or riser due to spark igniting flammable gas	Truck backs into tank farm equipment (e.g., riser, pump pit)	F3	E1
LDUA 5-30	Release of contamination from LDUA or riser due to damage from vehicles	Truck moves after setup	F3	E1
LDUA 5-31	Release of contamination due to transport vehicle accident.	Vehicle accident during transport	F3	E1
LDUA 5-32	Worker injury due to vehicle engine fire	Vehicle engine fire	F3	E0
LDUA 5-33	Release of contamination from LDUA or riser due to damage from vehicles	Failure to deploy outriggers or premature retraction of outriggers	F3	E1
LDUA 5-35	Worker exposure due to misalignment of mast arm during insertion creating external contamination	Misaligning during insertion	F3	E0
LDUA 5-36	Release of contamination from LDUA or riser due to damage from improper operation	Attempting to lower VPM to horizontal while arm is in riser	F3	E1
LDUA 5-39	Release of contamination from LDUA or riser due to equipment failure causing riser damage	Brakes not operating as designed	F3	E1
LDUA 5-41	Release of contamination from TRIC and tank riser due to damage during seismic event	Seismic event	F3	E1
LDUA 5-42	Release of contamination from LDUA or riser due to damage from vehicle operation resulting in fire	Other truck impact	F3	E1
LDUA 5-44	Release of contamination from LDUA or riser due to damage from vehicle operation	Heavy rain or ponded surface water or flood	F3	E1
LDUA 6-28	Worker injury due to communication failure	Communication failure between control locations and TRIC during maintenance	F3	E0
LDUA 6-29	Worker injury due to lifting	Lifting injuries in moving heavy cable	F3	E0
LDUA 6-30	Worker injury due to electric shock	Electrical malfunction	F3	E0
LDUA 6-5	Worker injury due to fire	Fire	F3	E0
LDUA 6-7	Worker injury due to electric shock	Impact, severing of cable by heavy equipment	F3	E0
LDUA 7-12	Worker injury due to accident when parking trailer	Collision with obstacles during parking of trailer	F3	E0
LDUA 7-13	Worker injury due to electric shock	Improper grounding - bonding	F3	E0

Table D3.4-3. Hazardous Conditions With Potential Significant Worker Consequences (SI).[1] (34 sheets)

ID	Hazardous Condition	Cause	Freq NC	Env Cons
LDUA 7-14	Worker injury due to electric shock	Electrical shock hazards during hook-up	F3	E0
LDUA 7-16	Worker injury due to electric shock	Dust in electronic distribution disconnects and junction box	F3	E0
LDUA 7-3	Worker injury due to slipping hazard	Slipping hazards	F3	E0
LDUA 7-4	Worker injury due to fire	Fire in trailer	F3	E0
LDUA 7-6	Worker injury due to trailer falling over	Wind	F3	E0
LDUA 7-7	Worker injury due to trailer falling over	Seismic event	F3	E0
LDUA/EREE 1-10	Worker exposure due to leak of waste into EREE	Line break	F3	E0
LDUA/EREE 1-29	Worker exposure due to operator error/mechanical failure	Operator error or mechanical failure	F3	E0
LDUA/EREE 1-30	Worker exposure due to operator error/mechanical failure	Operator error or mechanical failure	F3	E0
LDUA/EREE 1-8	Worker exposure due to leak of waste into EREE	Compressor fails	F2	E0
LDUA/EREE 1-9	Worker exposure due to leak of waste into EREE	Line plug	F3	E0
NP-01	Radioactive and hazardous material release from tanks and ventilation system due to loss of electric power	Lightning strikes power distribution system	F3	E1
NP-06	Radioactive and hazardous material releases from tanks, nearby ground surfaces, and ventilation systems due to above ground disturbances	High wind	F3	E1
NP-09	Radioactive and hazardous material releases from tanks due to seismic event	Seismic event results in tank leaks or below grade tank ruptures	F1	E3
NP-10	Radioactive and hazardous material releases from tanks due to loss of power to ventilation systems	Ash fall from volcanic activity	F2	E1
NP-12	Radioactive and hazardous material releases from tanks due to ventilation system failures	Dust storms/dust devils	F3	E1
NP-14	Radioactive and hazardous material releases from tanks due to loss of power to ventilation systems	Severe hail	F3	E1
OGT-FLOW1-01	Personnel exposure to radioactive or hazardous material in the primary pipe due to pump failure	Pump failure, material settles in line (crystallization) and plugs line prohibiting transfer/waste is sitting in line and creates increased exposure to personnel	F3	E0

Table D3.4-3. Hazardous Conditions With Potential Significant Worker Consequences (SI).[1] (34 sheets)

ID	Hazardous Condition	Cause	Freq NC	Env Cons
OGT-FLOW2-01A	Release of radioactive or hazardous material from the primary pipe due to leak caused by incorrect pump installed	Incorrect pump installed creates excessive flow and isolation valve closed on secondary pipe, erosion of EPDM and pressurization of secondary pipe causing leaks from flanges gasket within concrete shield	F2	E2
OGT-FLOW2-03A	Release of radioactive or hazardous material from the primary pipe due to leak caused by incorrect pump installed	Installation of incorrect pump, failure of inner pipe and isolation valves closed on secondary pipe drains causing leak from failed welds on flange within the concrete shield	F1	E2
OGT-INTEG3-01	Release of radioactive or hazardous material from overflow of pit due to leak caused by loss of primary pipe integrity from aging	Primary pipe failure due to radiation/chemical age related damage, leak of primary pipe, flow to pit from secondary pipe drains when pipe drains are in open position with pipe drains open and insufficient drainage from pit	F1	E1
OGT-OPS1-01	Release of radioactive or hazardous material from the primary pipe due to line crushing from equipment drop	Drop shield blocks on transfer line during disassembly after pumping complete, potential to break primary and secondary line	F3	E1
OGT-SPEC1-01	Personnel exposure to radioactive or hazardous material in the primary pipe due to loss of electrical supply	Loss of flow leading to line plug and the need to remove/replace, unclog line	F3	E0
OGT-TEMP1-01	Personnel exposure to radioactive or hazardous material from the primary pipe due leak caused by low ambient temperature	Plugging of pipe due to crystallization or due to freezing for very low temperature	F1	E0
RAD-01	Exposure to radioactive and/or toxic materials from pits or risers due to radiation monitoring failure	Failure to monitor	NA	NA
RAD-01-I	Injury of worker from exposure to radioactive materials due to failure to monitor radiation	Failure to monitor	NA	E1
RAD-02	Exposure to radioactive and/or toxic materials from pits or risers due to radiation monitoring failure	Failure of monitoring instrument	NA	NA
RAD-02-I	Injury of worker from exposure to radioactive materials due to radiation monitoring failure	Failure of monitoring instrument	NA	E1
RAD-03	Exposure to radioactive and/or toxic materials from pits or risers due to radiation monitoring failure	Improper calibration of monitoring instrument	NA	NA
RAD-03-I	Injury of worker from exposure to radioactive materials due to radiation monitoring failure	Improper calibration of monitoring instrument	NA	E1
RSR-01	Release of radioactive and/or toxic material upon opening of riser due to human error	Human error - improper contamination control, failure to monitor (rad or sniff), improper monitoring	F3	E1

Table D3.4-3. Hazardous Conditions With Potential Significant Worker Consequences (S1).[1] (34 sheets)

ID	Hazardous Condition	Cause	Freq NC	Env Cons
RSR-01-I	Release of radioactive and/or toxic material from the vapor space due to opening of riser	Human error - improper contamination control, failure to monitor (rad or sniff), improper monitoring	F3	E1
RSR-02	Asbestos hazard from gasket materials during access to riser	Failure to follow asbestos procedures	NA	NA
RSR-02-I	Injury of worker from exposure to asbestos from gasket materials during access to riser due to failure to follow procedures	Failure to follow asbestos procedures	NA	E1
RSR-03	Asbestos hazard from gasket materials during access to riser	Failure of mask or fresh air (if appropriate)	NA	NA
RSR-03-I	Injury of worker from exposure to asbestos from gasket materials during access to riser due to failure of PPE or fresh air supply	Failure of mask or fresh air (if appropriate)	NA	E1
RSR-04	Direct radiation exposure from open riser due to human error	Failure to follow procedures, failure to monitor or improper monitoring	NA	NA
RSR-04-I	Injury of worker from exposure to direct radiation exposure from open riser due to failure to follow procedures	Failure to follow procedures, failure to monitor or improper monitoring	NA	E1
RSR-05-IA	Facility confinement breach from dropped equipment (tools, mirrors) into facility	Failure to attach lanyard or other position limiting device Failure of lanyard or device	F2	E1
RSR-05-IB	Facility confinement breach from dropped equipment (tools, mirrors) into facility	Failure to attach lanyard or other position limiting device Failure of lanyard or device	F2	E2
RSR-08-I	Injury of worker from falling into facility due to large access opening and human error	Human error	NA	E1
SFF-01	Release of radioactive and/or toxic materials during sniff sampling due to human error or instrument failure	Improper sniffing technique or instrument failure, failure to perform radiation monitoring, improper monitoring, or instrument failure	F3	E1
SFF-01-I	Injury of worker from exposure to toxic materials due to sniff sampling failure	Improper sniffing technique or instrument failure	NA	E1
VEH-04	Personnel receive radiation exposure from casks during transport due to human error	Personnel drive the vehicles or work near the cask transport vehicle	NA	NA
VEH-04-I	Injury of worker from radiation exposure from casks during transport due to inappropriate ALARA practices	Driver receives unexpected exposure or personnel work near the cask transport vehicle	NA	E1
VEH-05	Vehicle impact with electrical power pole	Loss of control of vehicle or lack of attention to driving	NA	NA
VEH-05-I	Injury of worker from impact with electrical power pole due to vehicle accident	Loss of control of vehicle or lack of attention to driving	NA	E1

Table D3.4-3. Hazardous Conditions With Potential Significant Worker Consequences (SI).[1] (34 sheets)

ID	Hazardous Condition	Cause	Freq NC	Env Cons
VEH-06	Personnel are pinched or crushed between vehicle and solid structure	Vehicle moves exerting pressure on personnel between vehicle and solid structure	NA	NA
VEH-06-I	Injury of worker from being pinched or crushed between vehicle and solid structure due to inattention to situation	Vehicle exerts pressure on personnel located between the vehicle and solid structure	NA	E1
VSU-01	Release of residual contamination and/or hazardous material from VSU due to VSU lid being left off	VSU lid is left off due to human error, wind blows	F3	E1
VSU-02	Release of residual contamination and/or hazardous material from VSU due to VSU lid being left off	VSU lid is left off due to human error, rain/snow melt seeps out bottom of VSU	F3	E1
VSU-03	Release of residual contamination and/or hazardous material from VSU due to VSU wall degradation	VSU wall degradation over time	F3	E1
VSU-04	Release of residual contamination and/or hazardous material from VSU due to internal VSU pressurization	Covered VSU pressurizes due to ambient temperature heat-up	F3	E1
VSU-05	Tripping hazard	Exposure above ground level	NA	NA
VSU-06	Falling hazard	VSU without a lid and not capped	NA	NA
XS-01-FLOW04	Release of liquid radioactive waste due to overflow from 244-TX DCRT to annulus	Human error (leaving water on after extended flush) causes overflow to annulus	F2	E1
XS-01-PRES02	Release of liquid radioactive waste from transfer pipe due to damaged saltwell pump	Leak from pump or seal from various causes	F3	E2
XS-01-TEMP02	Release of steam-aerosol from transfer piping in pump pit due to steam hammer and resulting pipe damage	Extended recirculation and consequential heating of saltwell liquid with sudden opening of valve when cover block is in place	F3	E1
XS-02-FLOW01	Release of headspace aerosols from 244-TX DCRT into PFP due to jumper misalignment	Jumper misalignment allowing PFP steam jet or ventilation system to pull vapors DCRT	F2	E1
XS-02-FLOW06	Release of liquid radioactive waste from DCRT due to overflowing of PFP sending tank (in facility)	Reverse flow caused by jumper misalignment	F3	E1
XS-03-LEVE	Release of radioactive liquids from DCRT "annulus" (vault) due to DCRT leak	Corrosion or structural failure of DCRT or associated piping	F3	E2
XS-03-PRES01	Release of toxic vapors from DCRT due to increased concentrations in DCRT atmosphere	Tank isolated from forced ventilation with gas evolution	F3	E1
XS-03-PRES01A	Release of radioactive aerosols from DCRT headspace due to positive pressure	Loss of ventilation flow due to failure of ventilation fans causes positive pressure in tank	F3	E1
XS-03-PRES02	Release of radioactive aerosols from DCRT headspace due to positive pressure	Dampers inadvertently closed causing positive pressure in tank	F3	E1

Table D3.4-3. Hazardous Conditions With Potential Significant Worker Consequences (S1).[1] (34 sheets)

ID	Hazardous Condition	Cause	Freq NC	Env Cons
XS-03-PRES03	Release of radioactive aerosols from DCRT headspace due to positive pressure in DCRT	Ductwork damage due to external event causes positive pressure in DCRT	F3	E1
XS-03-PRES04	Release of radioactive aerosols from DCRT headspace due to positive pressure	Loss of power causes positive pressure in tank	F3	E1
XS-03-TEMP04	Release of radioactive aerosols from 244-TX DCRT due to fire	Burning of flammable gas in DCRT	F1	E1
XS-03-TEMP05	Release of radioactive aerosols from DCRT headspace due to positive pressure	Excessive agitation-pumping causes positive pressure and generates aerosols	F3	E1
XS-03-TEMP06	Release of toxic vapors from DCRT headspace due to positive pressure in DCRT	Excessive agitation-pumping causes positive pressure	F3	E1
XS-03-TEMP07	Release of radioactive aerosols from DCRT headspace due to positive pressure	Loss of ventilation flow due to HEPA filter blockage in cold weather causes positive pressure in tank	F3	E1
XS-03-TEMP08	Release of radioactive aerosols from DCRT headspace due to positive pressure	Loss of ventilation flow plus high heat waste causes positive pressure in tank	F3	E1
XS-06-FLOW06	Release of radioactive aerosols from DCRT annulus due to a spill of radioactive liquid	Overfilling DCRT due to a misrouting causes spill into DCRT annulus	F3	E1
XS-12-FLOW01	Release of toxic gas from diversion box due to accumulation of toxic vapors from catch tank	Chemical reaction of catch tank material with backflow of vapors via diversion box drain line	F3	E1
XS-12-FLOW04	Release of toxic gas from diversion box due to accumulation of toxic vapors from catch tank	Radiolysis of catch tank material with backflow of vapors via diversion box drain line	F3	E1
XS-12-FLOW06	Release of radioactive waste to the soil from diversion box drain due to a spill of radioactive liquid into 241-U-152 diversion box	Leak of diversion box drain line upstream of catch tank	F3	E2
XS-20-FLOW02	Release of radioactive aerosols from T-Plant tank due to chemical reaction	Transfer of incompatible waste to T-Plant due to improper valve lineup	F2	E2
XS-20-FLOW06	Release of radioactive aerosols from T-Plant tank due to positive pressure	Chemical reaction of 244-S material with contents of T-Plant tank due to misrouting causes positive pressure in tank	F2	E2
XS-20-FLOW07	Release of toxic vapors from T-Plant due to chemical reaction with incompatible material in 244-S DCRT	Mixing contents of 244-S with contents of T-Plant tank due to misrouting causes chemical reaction	F2	E2
XS-26-PRES01A 102AW-02-PRES	Release of radioactive aerosols from Tank 241-SY-102 due to positive pressure	Blockage of exhaust path causes pressure in tank	F3	E1
XS-26-PRES02A 102AW-02-PRES	Release of radioactive aerosols from Tank 241-SY-102 due to positive pressure	Failure of ventilation fans causes pressure in tank	F3	E1

Table D3.4-3. Hazardous Conditions With Potential Significant Worker Consequences (SI).[1] (34 sheets)

ID	Hazardous Condition	Cause	Freq NC	Env Cons
XS-26-PRES03	Release of radioactive aerosols from Tank 241-SY-102 due to positive pressure	Use of hot water to decontaminate equipment in tank atmosphere - generate aerosols and pressurizes the tank	F3	E1
XS-26-PRES03 102AW-02-PRES	Release of radioactive aerosols from Tank 241-SY-102 due to positive pressure	Loss of power to ventilation system causes positive pressure in tank	F3	E1
XS-26-TEMP 102AW-08-TEMP	Release of radioactive aerosols from Tank 241-SY-102 annulus due to leak of tank contents to annulus	Exceeding design temperature of tank due to high heat waste and loss of primary ventilation system	F1	E1
XS-26-TEMP02	Release of radioactive aerosols from Tank 241-SY-102 annulus due to leak of tank contents to annulus	Exceeding design temperature of tank due to failure of annulus ventilation	F1	E1
XS-41B-LEVE02	Release of toxic gas from vent station access pit via valve operator seals due to liquid accumulation in vent station nozzle pit	Overflow of vent station catch tank into nozzle pit causes tank gas accumulation	F3	E1
XS-41B-LEVE04	Release of radioactive liquid from vent station access pit via valve operator seals due to liquid accumulation in vent station nozzle pit	Overflow of vent station catch tank into nozzle pit	F3	E1
XS-41C-LEVE02	Release of radioactive aerosols from catch tank pit due to presence of liquid from collapse of catch tank	Intrusion plus plugged drain creating external load on catch tank	F1	E1
XS-41C-LEVE03	Release of toxic gas from vent station catch tank pit due to presence of liquid waste in pit	Backflow from cross-site piping encasement leak causes tank gas accumulation	F3	E1

[1]This table was generated from a relational database of hazards information. Changes from the previous revision of this table have been independently reviewed, but are not highlighted in Redline.

Table D3.4-4. Hazardous Conditions With Potential Occupational Safety Consequence (OCC).[1] (5 sheets)

ID	Hazardous Condition	Cause
102AW-02-PRES.01 XS-26-PRES.01	Personnel injured by projectile debris from catastrophic fan failure	Loss of fan due to high pressure causing fan to walk into another object and become airborne
102AW-04-STRU.01	Personnel injured by falling equipment	Equipment drop during crane work
107AN-01-TEMP.01	Thermal hazard to personnel	Caustic in tank heated too hot at source
244AR-05.a.01	Weak roof structure permits person to fall through roof	Aging (roof)
244AR-PH01	Water hammer during setup for jetting	Condensate in the lines coming into contact with steam
244AR-PH02	Asphyxiation due to entry into confined space	Lack of oxygen due to corrosion, decomposition or fire/explosion
244AR-PH04	Person falls from elevated surface	Roof weakness (more than 2 stories high)
244AR-PH05	Person falls from elevated surface	Crane maintenance activities
244AR-PH06	Person falls from elevated surface	Walking over weak filter vault roof
244AR-PH07	Person falls from elevated surface	Ladder climbing
244AR-PH08	Person comes in contact with rotating equipment	Maintenance work on rotating equipment
244AR-PH09	Person comes in contact with rotating equipment	Process operations activities
244AR-PH10	Person injured by failure of equipment during over speed event	Equipment malfunction
244AR-PH11	Personnel injury from contact with energized circuits or faulted equipment	Insulation failure
244AR-PH12	Personnel injury from contact with energized circuits or faulted equipment	Maintenance activities
244AR-PH13	Personnel injury from contact with energized circuits or faulted equipment	Mechanical damage to insulation
244AR-PH14	Personnel injury due to electrical fire	Insulation failure
244AR-PH15	Personnel injury due to electrical fire	Overload conditions, breaker failure, sparking in flammable atmosphere
244AR-PH16	Personnel exposure to insulation or construction materials containing asbestos	Disturbance from: fire, maintenance, wind, aging, water intrusion
244AR-PH17	Personnel exposed to toxic or corrosive materials	Maintenance and operations activities combined with leakage such as pipe failure, pump failure or valve packing leaks
244AR-PH18	Personnel injured by high pressure gas bottles becoming projectiles	Malfunction of bottle regulator
244AR-PH19	Personnel injured by high pressure gas bottles becoming projectiles	Improper storage and transport
BND-01	Industrial hazards (lifting, bending, tool accidents; creates tripping hazard)	Failure to follow safe work practices, equipment failures
BND-01-I	Injury of worker from (lifting, bending, tool accidents; creates tripping hazard) due to bonding activities	Failure to follow safe work practices, equipment failures

Table D3.4-4. Hazardous Conditions With Potential Occupational Safety Consequence (OCC).[1] (5 sheets)

ID	Hazardous Condition	Cause
BND-02-I	Injury of worker from ignition of combustibles due to preparation for bonding	Drilling holes for bonding attachments causes sparks which is a hazard
CCF-14	Personnel illness or asphyxiation due to air supply faults	SCBA air supply of poor quality
CCF-15	Degraded operations, increased down time, possible personnel injury due to supply of inferior parts	Faulty parts or equipment supplied (e.g. o-rings, seals, electronics, HEPAs, pressure regulators, etc)
CDP-09	Driver error during drive-by causes injury to personnel	Driver error
CRN-14-I	Injury of worker from boom failure due to human error	Human error: improper load assembly, rigging, crane overloaded
CRN-15-I	Injury of worker from boom failure due to mechanical failure	Mechanical failure: corrosion, faulty materials
CRN-16-I	Injury of worker from boom failure due to high wind or seismic	High wind or seismic event
CRN-17-I	Injury of worker from electricity due to crane hitting powerlines/supplies	Human error: improper load assembly, rigging, crane positioning
CRN-24	Carbon monoxide from crane accumulates in pits or temporary confinement (greenhouse, etc)	Oxygen deficient atmosphere and failure to provide adequate ventilation, Failure to sniff or improper sniffing
CRN-24-I	Injury of worker from carbon monoxide accumulation in pits or temporary confinement (greenhouse, etc) due to crane motor exhaust	Failure to provide adequate ventilation,!Failure to sniff or improper sniffing
CRN-25	Loss of lateral load control, swinging load into personnel or equipment	Human error: improper load assembly, rigging, positioning error
CRN-25-IA	Injury of worker from swinging load into personnel due to loss of lateral load control	Human error: improper load assembly, rigging, positioning error
CRN-26	Loss of lateral load control, swinging load into personnel or equipment	Mechanical failure: corrosion, faulty materials, hydraulics, outriggers in soft soil
CRN-26-IA	Injury of worker from swinging load into personnel due to loss of lateral load control	Mechanical failure: corrosion, faulty materials, hydraulics, outriggers in soft soil
CRN-27	Loss of lateral load control, swinging load into personnel or equipment	High wind or seismic event
CVR-10	Person(s) asphyxiated	Oxygen deficient atmosphere and failure to sniff or improper sniffing
CVR-10-I	Injury of worker from asphyxiation due to pit atmosphere	Failure to sniff or improper sniffing
CVR-11	Person(s) asphyxiated	Oxygen deficient atmosphere and fresh air supply faults
CVR-11-I	Injury of worker from asphyxiation due to fresh air supply faults	Fresh air supply faults
CVR-14-I	Injury of worker from biological hazards (spiders, snakes, etc.) due to open nozzles or risers in pit	Open nozzles or risers in pit with biological hazards (spiders, snakes, etc.) inside
DCN-05	Personnel injury by contact with tools	Human error

Table D3.4-4. Hazardous Conditions With Potential Occupational Safety Consequence (OCC).[1] (5 sheets)

ID	Hazardous Condition	Cause
DCN-05-I	Injury of worker from contact with tools due to human error during decontamination activities	Human error
DCN-07	Personnel exposed to asphyxiant	Oxygen deficient atmosphere and PPE failure or absence in confined space
DCN-07-I	Injury of worker from exposure to asphyxiant due to PPE failure	PPE failure or absence in confined space
EE-12	Washout of soils surrounding a transfer pipe	Water main to evaporator or steam plant breaks
EE-13	Steam jet impinges on equipment supporting multiple tanks	Steam line break
EE-14	Worker injury due to electrocution	Excavation into power source
EE-15	Washout of soils resulting in sink hole due to excavation error	Excavation into water line
GRN-01	Industrial hazards (lifting, bending, trips and falls, tool operations)	Human errors
GRN-01-I	Injury of worker from (lifting, bending, tool accidents; creates tripping hazard) due to temporary confinement activities	Human errors
GRN-02	Industrial hazards (lifting, bending, trips and falls, tool operations)	Mechanical failure of equipment, tools
GRN-02-I	Injury of worker from (lifting, bending, trips and falls, tool operations) due to mechanical failures	Mechanical failure of equipment, tools
GRN-03-I	Injury of worker from asphyxiants in greenhouse due to collection of asphyxiants before removal	Human error
I-242A-2-CMP-A	Release (potential for leak) to tank annulus (secondary confinement) caused by damage to feed tank due to overfilling of tank	Valve failure or inadvertently opened valve
I-242A-7-PRS-A	Personnel hazard from ruptured compressed air line	Failure of compressor unloading switch due mechanical failure or incorrect setting during maintenance
I-242S-5-PRS-A	Personnel hazard due to rupture of compressed air line	Human error - failure of compressor unloading switch due to incorrect setting during maintenance
LDUA 2-50	Worker injury due to equipment damage	Human error, software bug
LDUA 2-54	Worker injury due to industrial accidents	Industrial accidents
LDUA 3-19	Worker injury due to general industrial hazards	General industrial hazards (e.g. during end effector change out)
LDUA 3-20	Worker injury due to electric shock	Electric shock hazards during hook-up and maintenance
LDUA 4-11	Worker injury due to blow out of housing panel	Supply pressure on with the VPM housing gate closed
LDUA 4-43	Worker injury due to industrial hazards	Industrial hazards during maintenance
LDUA 5-17	Worker injury due to inadvertent motion of valve	Operator error, improperly positioned valves
LDUA 5-21	Worker injury due to shock load damaging equipment	Shock load causes damage
LDUA 5-32	Worker injury due to vehicle engine fire	Vehicle engine fire

Table D3.4-4. Hazardous Conditions With Potential Occupational Safety Consequence (OCC).[1] (5 sheets)

ID	Hazardous Condition	Cause
LDUA 6-28	Worker injury due to communication failure	Communication failure between control locations and TRIC during maintenance
LDUA 6-29	Worker injury due to lifting	Lifting injuries in moving heavy cable
LDUA 6-30	Worker injury due to electric shock	Electrical malfunction
LDUA 6-5	Worker injury due to fire	Fire
LDUA 6-7	Worker injury due to electric shock	Impact, severing of cable by heavy equipment
LDUA 7-12	Worker injury due to accident when parking trailer	Collision with obstacles during parking of trailer
LDUA 7-13	Worker injury due to electric shock	Improper grounding - bonding
LDUA 7-14	Worker injury due to electric shock	Electrical shock hazards during hook-up
LDUA 7-16	Worker injury due to electric shock	Dust in electronic distribution disconnects and junction box
LDUA 7-3	Worker injury due to slipping hazard	Slipping hazards
LDUA 7-4	Worker injury due to fire	Fire in trailer
LDUA 7-6	Worker injury due to trailer falling over	Wind
LDUA 7-7	Worker injury due to trailer falling over	Seismic event
RAD-02-1	Injury of worker from exposure to radioactive materials due to radiation monitoring failure	Failure of monitoring instrument
RAD-03-1	Injury of worker from exposure to radioactive materials due to radiation monitoring failure	Improper calibration of monitoring instrument
RSR-02	Asbestos hazard from gasket materials during access to riser	Failure to follow asbestos procedures
RSR-03	Asbestos hazard from gasket materials during access to riser	Failure of mask or fresh air (if appropriate)
RSR-08-1	Injury of worker from falling into facility due to large access opening and human error	Human error
SFF-01-1	Injury of worker from exposure to toxic materials due to sniff sampling failure	Improper sniffing technique or instrument failure
VEH-05	Vehicle impact with electrical power pole	Loss of control of vehicle or lack of attention to driving
VEH-05-1	Injury of worker from impact with electrical power pole due to vehicle accident	Loss of control of vehicle or lack of attention to driving
VEH-06	Personnel are pinched or crushed between vehicle and solid structure	Vehicle moves exerting pressure on personnel between vehicle and solid structure
VEH-06-1	Injury of worker from being pinched or crushed between vehicle and solid structure due to inattention to situation	Vehicle exerts pressure on personnel located between the vehicle and solid structure
VSU-05	Tripping hazard	Exposure above ground level

Table D3.4-4. Hazardous Conditions With Potential Occupational Safety Consequence (OCC).[1] (5 sheets)

ID	Hazardous Condition	Cause
VSU-06	Falling hazard	VSU without a lid and not capped

[1]This table was generated from a relational database of hazards information. Changes from the previous revision of this table have been independently reviewed, but are not highlighted in Redline.

This page intentionally left blank.

Table D3.4-5. Hazardous Conditions With Potential Radiation Exposure Consequences (RP).[1] (4 sheets)

ID	Hazardous Condition	Cause
102AW-04-PRES.01	Personnel exposure higher than expected	Removal of cover block and pressure release due to loss of fan.
102AW-13-FLOW.01	Personnel exposure due to radiation doses from contaminated pipes	Multiple valving errors and failure of backflow prevention causing reverse flow from valve pit to flush pit
114SX-06.b	Personnel exposed to ionizing radiation due to lack of shielding	Inadvertent removal of tank overburden (gravel)
244AR-06.a.02	High activity radioactive material exposes person to ionizing radiation	Tank ventilation heater coil failure
244AR-07.a.04	Exposure to low concentrations of radioactive material	Excess water used in steam jet flush
244AR-PH03	Contamination of personnel with radioactive material	Radioactive contamination in canyon or sample gallery being disturbed by personnel entry
CP-GRT-01	Personnel exposure to contaminated pipe string due to removal of pipe during grouting	Contaminated soil in pipe
CP-MSP-09	Release of isotope source to the soil surface due to load drop	Human Error caused load drop
CP-MSP-11	Release of radioactive material to the soil surface due to crushed sensor package	Human Error: Heavy load inadvertently set on top of sensor package
CP-RMV-02	Personnel exposure to high level waste contamination on surface of pipe string due contact with leaking waste	Human error caused puncture to inactive transfer line during push operations
CP-RMV-04	Personnel exposure to radiation through push pipe due to puncture of tank dome	Human error results in removal of sample canister containment
CP-SET-09	Release of isotope source from the MSP to the soil surface due to load drop	Human error causes load drop
CP-SET-11	Release of radioactive material from the MSP to the soil surface due to crushing of the sensor package	Human error: Heavy load is inadvertently set on top of the sensor package
CP-SSP-06	Personnel exposure to contaminated soil sample while removing sampling canister from pipe sleeve	Human error
CP-SSP-07	Personnel exposure to contaminated soil sample while removing sampling canister from pipe sleeve	Mechanical failure
CP-SSP-08	Personnel exposure to contaminated soil sample while removing sampling canister from pipe sleeve	High wind
CP-SSP-09	Personnel exposure to contaminated pipe string caused by failure of sampling canister soil catcher to close properly	Mechanical failure
CP-SSP-10	Personnel exposure to puff release of contaminated dust (particulates) caused by air movement as the sample canister is withdrawn from pipe sleeve	Contaminated inner tube
CP-SSP-11	Release of contamination to environment due to dropping of the sample canister during transfer of sample from pipe to the shipping cask	Human error - workers drop sample canister or fail to handle properly

Table D3.4-5. Hazardous Conditions With Potential Radiation Exposure Consequences (RP).[1] (4 sheets)

ID	Hazardous Condition	Cause
CP-SSP-12	Release of contamination to environment due to dropping of the sample canister during transfer of sample from pipe to the shipping cask	Mechanical failure of the sample canister
CP-SSP-13	Release of contamination to environment due to dropping of the sample canister during transfer of sample from outer push pipe to the shipping cask	High wind
CP-SSP-14	Release of contamination to environment due to dropping of the repackaged soil sample container	Human error - workers drop sample canister or fail to handle properly
CP-SSP-15	Release of contamination to environment due to dropping of the repackaged soil sample container	High wind
CRN-14	Boom failure leads to worker injury or exposure	Human error: improper load assembly, rigging, crane overloaded
CRN-15	Boom failure leads to worker injury or exposure	Mechanical failure: corrosion, faulty materials
CRN-16	Boom failure leads to worker injury or exposure	High wind or seismic event
CVR-06	Person falls in pit sustaining injury or exposed to surface radiation in pit	Failure to erect fence or failure to erect securely
CVR-07	Person falls in pit sustaining injury or exposed to surface radiation in pit	Person leans over fence too far
CVR-08	Person falls in pit sustaining injury or exposed to surface radiation in pit	Fence failure
CVR-09	Person falls in pit sustaining injury or exposed to radiation	Seismic event or high wind/tornado
DCN-01	Decontamination personnel are contaminated or exposed	Failure of PPE
DCN-01-I	Injury of worker from contamination or exposure of decontamination personnel due to failed PPE	Failure of PPE
DCN-06	Personnel exposure higher than expected	More contamination than expected
DCN-06-I	Injury of worker from higher than expected exposure due to unknown contamination	More contamination than expected
I-PUREX-2-PRS-C	Personnel exposure due to vacuum pulling radioactive material back to operating gallery, worker hazard at PUREX (dose concern)	Failure to air purge line after transfer (mechanical failure)
I-PUREX-4-PRS-C	Personnel exposure due to vacuum to pulling radioactive material back to operating gallery, worker hazard at Purex (dose concern)	Failure to air purge line after transfer (mechanical failure)
LDUA 1-10	Worker exposure due to leak of waste into LDUA components	Line plug
LDUA 1-11	Worker exposure due to leak of waste into LDUA components	Line break
LDUA 1-34	Worker exposure due to operation error or mechanical failure	Operator error or mechanical failure
LDUA 2-13	Worker exposure due to leak of waste into LDUA components	Line plug
LDUA 2-14	Worker exposure due to leak of waste into LDUA components	Line break

Table D3.4-5. Hazardous Conditions With Potential Radiation Exposure Consequences (RP).[1] (4 sheets)

ID	Hazardous Condition	Cause
LDUA 2-53	Worker exposure due to contamination in LDUA	LDUA contamination - due to in-tank activities
LDUA 3-4	Worker exposure due to purge system overpressure - increased contamination in TRIC	Purge system overpressure (VPM auxiliary hookup)
LDUA 3-5	Worker exposure due to loss of decontamination water flow	Loss of decontamination water flow
LDUA 3-7	Worker exposure due to plug in decontamination line resulting in poor decontamination	Decontamination water line plugs due to solids
LDUA 4-10	Worker exposure due to ignition of flammable gas inside VPM	Loss of supply air from VPM outer tube.
LDUA 4-39	Worker exposure due to loss of computer controls/ requires manual retrieval of mast	Loss of computer
LDUA 4-40	Worker exposure due to insufficient decontamination	Mast tubes not sufficiently decontaminated prior to removal
LDUA 4-8	Worker exposure due to leak of waste into LDUA components	Line plug
LDUA 4-9	Worker exposure due to leak of waste into LDUA components	Line break
LDUA 5-35	Worker exposure due to misalignment of mast arm during insertion creating external contamination	Misaligning during insertion
LDUA/EREE 1-10	Worker exposure due to leak of waste into EREE	Line break
LDUA/EREE 1-29	Worker exposure due to operator error/mechanical failure	Operator error or mechanical failure
LDUA/EREE 1-30	Worker exposure due to operator error/mechanical failure	Operator error or mechanical failure
LDUA/EREE 1-8	Worker exposure due to leak of waste into EREE	Compressor fails
LDUA/EREE 1-9	Worker exposure due to leak of waste into EREE	Line plug
OGT-FLOW1-01	Personnel exposure to radioactive or hazardous material in the primary pipe due to pump failure	Pump failure, material settles in line (crystallization) and plugs line prohibiting transfer/waste is sitting in line and creates increased exposure to personnel
OGT-SPEC1-01	Personnel exposure to radioactive or hazardous material in the primary pipe due to loss of electrical supply	Loss of flow leading to line plug and the need to remove/replace, unclog line
OGT-TEMP1-01	Personnel exposure to radioactive or hazardous material from the primary pipe due leak caused by low ambient temperature	Plugging of pipe due to crystallization or due to freezing for very low temperature
RAD-01	Exposure to radioactive and/or toxic materials from pits or risers due to radiation monitoring failure	Failure to monitor
RAD-01-I	Injury of worker from exposure to radioactive materials due to failure to monitor radiation	Failure to monitor
RAD-02	Exposure to radioactive and/or toxic materials from pits or risers due to radiation monitoring failure	Failure of monitoring instrument
RAD-03	Exposure to radioactive and/or toxic materials from pits or risers due to radiation monitoring failure	Improper calibration of monitoring instrument

Table D3.4-5. Hazardous Conditions With Potential Radiation Exposure Consequences (RP).[1] (4 sheets)

ID	Hazardous Condition	Cause
RSR-02-I	Injury of worker from exposure to asbestos from gasket materials during access to riser due to failure to follow procedures	Failure to follow asbestos procedures
RSR-03-I	Injury of worker from exposure to asbestos from gasket materials during access to riser due to failure of PPE or fresh air supply	Failure of mask or fresh air (if appropriate)
RSR-04	Direct radiation exposure from open riser due to human error	Failure to follow procedures, failure to monitor or improper monitoring
RSR-04-I	Injury of worker from exposure to direct radiation exposure from open riser due to failure to follow procedures	Failure to follow procedures, failure to monitor or improper monitoring
VEH-04	Personnel receive radiation exposure from casks during transport due to human error	Personnel drive the vehicles or work near the cask transport vehicle
VEH-04-I	Injury of worker from radiation exposure from casks during transport due to inappropriate ALARA practices	Driver receives unexpected exposure or personnel work near the cask transport vehicle

[1]This table was generated from a relational database of hazards information. Changes from the previous revision of this table have been independently reviewed, but are not highlighted in Redline.

This document was too large to scan as a single document; therefore, it has been divided into smaller sections.

Section 6 of 10

Document Information			
Document #	SD-WM-BIO-001	**Revision**	1
Title	TWRS BASIS FOR INTERIM OPERATION		
Date	10/28/1998		
Originator	Y.G. NOORANI	**Originator Co.**	FDH
Recipient		**Recipient Co.**	
References	ECN-644566		
Keywords	AUTHORIZATION BASIS		
Projects	BIO,TWRS,TFARM,W-320		
Other Information	THIS SECTION CONTAINS APPENDICES E & F OF VOLUME 3		

APPENDIX E
FLAMMABLE GAS/SLURRY GROWTH UNREVIEWED SAFETY QUESTION: JUSTIFICATION FOR CONTINUED OPERATION FOR THE TANK FARMS AT THE HANFORD SITE

This page intentionally left blank.

EXECUTIVE SUMMARY

The flammable gas hazards present in the Tank Waste Remediation System (TWRS) facilities have been declared a redefined Unreviewed Safety Question (USQ) as described in Wagoner 1996, *Contract Number DE-AC06-96RL13200; the U.S. Department of Energy (DOE), Richland Operations Office (RL) Definition and Declaration of Flammable Gas Unreviewed Safety Question Issues.* This expands and replaces a previously declared USQ. The redefined flammable gas USQ is based on USQ Determination TF-96-0433, *Consolidation of Flammable Gas/Slurry Growth Unreviewed Safety Question Issues.* This Justification for Continued Operation (JCO) (1) clarifies the flammable gas hazards involved with the USQ, (2) provides a logic for a control strategy including a basis for control grading, (3) specifies ventilation to address the flammable gas hazards, and (4) specifies the applicability of the requirements to the TWRS facilities covered in the scope of this JCO. In this manner, the JCO provides the basis for the flammable gas related controls that are included in the TWRS Basis for Interim Operation (BIO) Technical Safety Requirements (TSRs).

The scope of the JCO covers engineered structures, containers, or receivers managed and operated by the contractor at TWRS that may store Hanford high-level waste in a condition and for a period of time that may result in generation, accumulation, and/or release of flammable gas. These structures include single-shell tanks (SSTs); double-shell tanks (DSTs); aging waste facilities (AWF); double-contained receiver tanks (DCRTs); TWRS managed inactive miscellaneous underground storage tanks (IMUSTs); catch tanks,

including 204-AR-TK-1, and waste transfer systems. The scope of the JCO also includes the 244-AR Facility, 242-S and 242-T Evaporators, 244-CR facility, and the pits associated with the 242-A Evaporator feed tank (241-AW-102). The Tank 241-SY-101 flammable gas hazard controls are included in Level I requirements of LA-UR-92-3196, *A Safety Assessment for Proposed Pump Mixing Operations to Mitigate Episodic Gas Releases in Tank 241-SY-101: Hanford Site, Richland, Washington.*

Since the original identification of the USQ in 1990, the understanding of the hazards associated with flammable gas in tanks has expanded considerably. The USQ has been expanded to include the following hazards:

- Generation of potentially flammable concentrations of hydrogen, ammonia, and methane or other gases
- Steady state release of flammable gas from the waste
- Accumulation of flammable gas in ex-tank intrusive areas such as sealed pits, risers, and connected ventilation spaces
- Accumulation of flammable gas in the headspace
- Retention of flammable gas in the waste, allowing spontaneous and induced releases
- Deflagration in the waste

- Plume burns

- Accumulation of flammable gas in waste-intruding equipment such as drill strings and failed liquid observation wells.

This JCO identifies the control strategy required to ensure safe storage and operations with the following exceptions:

(1) Rotary mode core sampling (RMCS), has an approved Authorization Basis (WHC-SD-WM-SAD-035, *A Safety Assessment of Rotary Mode Core Sampling in Flammable Gas Single-Shell Tanks: Hanford Site, Richland, Washington*), for RMCS activities (excluding flammable gas hazards);

(2) Controls for safe storage and operations in Tank 241-SY-101 exist within the current Authorization Basis, including Level I controls from LA-UR-92-3196, and are not superseded by this document; and,

(3) Adding and removing tanks from the Flammable Gas Watch List is not within the scope of this JCO.

Instead of identifying other normal or anticipated operations that should be included or excluded, the JCO states the controls that must be applied (from a flammable gas perspective only) to perform work in and around the facilities affected by the USQ. The acceptability of performing activities in and around the TWRS facilities affected by this USQ must be evaluated for each activity to ensure that all other Authorization Basis requirements are met.

The process to ensure that tank farm activities are performed consistent with the control strategy and requirements specified in the JCO is documented in Appendix EB.

The JCO control strategy is twofold. First, to manage risk associated with steady state accumulation of flammable gas in the headspace, sealed pits, risers, and other ex-tank intrusive areas, the JCO requires adequate passive or active ventilation, where practical, to minimize the possibility for gas concentrations to exceed 25% of the Lower Flammability Limit (LFL). The use of 25% of the LFL as the maximum allowed gas concentration provides margin to the concentration where a deflagration is actually possible (100% of the LFL). Second, to manage risk associated with retention of flammable gas within waste, the JCO requires equipment and work controls to prevent spark sources in the tanks when and where flammable conditions may exist.

The JCO also groups tanks that may be subject to large versus small gas release events (GREs). Large GREs may cause the headspace concentration of flammable gas in tanks to exceed 25% of the LFL (global impact). Small releases may elevate the concentration of flammable gas beyond 25% of the LFL in a localized area of the tank only (local impact).

To assign graded control sets, each TWRS-managed tank has been placed into one of three Facility Groups depending on which types of gas release events are associated with the tank. Tanks that have demonstrated a propensity for large spontaneous and induced GREs are in Facility Group 1. Tanks that may be susceptible to large induced GREs but only small spontaneous GREs are in Facility Group 2. All remaining large underground waste storage

tanks are assigned to Facility Group 3, where it is judged that spontaneous releases do not occur, but small induced releases may be possible in some tanks. Facilities where a GRE is judged to not be a concern are included as non-GRE facilities. The hazards and associated control sets for each group are highlighted and summarized in matrices.

The tank grouping is based, in part, on a published methodology that estimated the quantities of releasable gas in each tank (WHC-SD-WM-TI-724, *Methodology for Flammable Gas Evaluations*). Although this methodology cannot provide precise quantitative results, it indicates the presence of retained flammable gas. The technical uncertainties associated with this methodology are discussed in WHC-SD-WM-ER-594, *Evaluation of Recommendation for Addition of Tanks to the Flammable Gas Watch List*. Despite the technical uncertainty, this methodology, coupled with physical observations and sample results, provides a basis for the tank grouping described in this JCO.

This document concludes that compliance with the JCO control strategy provides prudent risk management for storage and operations with respect to the flammable gas hazard. The JCO has been incorporated into the TWRS Authorization Basis and controls identified in the JCO have been implemented as Technical Safety Requirements (TSRs). (See HNF-SD-WM-TSR-006, *Tank Waste Remediation System Technical Safety Requirements*.)

This page intentionally left blank.

APPENDIX E
FLAMMABLE GAS/SLURRY GROWTH UNREVIEWED SAFETY QUESTION: JUSTIFICATION FOR CONTINUED OPERATION FOR THE TANK FARMS AT THE HANFORD SITE

CONTENTS

Executive Summary . . . . . E-iii

E1.0 PURPOSE E1-1

E2.0 SCOPE E2-1

E3.0 DEFINITION OF THE FLAMMABLE GAS UNREVIEWED SAFETY QUESTION E3-1
E3.1 ORIGINAL UNREVIEWED SAFETY QUESTION DECLARATION E3-1
E3.2 REFINEMENTS TO THE UNREVIEWED SAFETY QUESTION DEFINITION . . E3-1
E3.2.1 Flammable Gas Composition E3-1
E3.2.2 Vapor Space Accumulation of Flammable Gas Because of Steady State Releases E3-3
E3.2.3 Gas Accumulation Within the Waste E3-4
E3.3 FACILITY GROUP (FG) ASSIGNMENT E3-14
E3.3.1 Facility Group 1 . . . . . E3-14
E3.3.2 Facility Group 2 . . . . . E3-14
E3.3.3 Facility Group 3 . . . . . E3-15
E3.3.4 Facility Group non-GRE E3-15

E4.0 TANK CONTROL STRATEGY E4-1
E4.1 TANK REGIONS E4-1
E4.1.1 Nonintrusive E4-1
E4.1.2 Ex-Tank Intrusive E4-3
E4.1.3 Dome Intrusive E4-4
E4.1.4 Waste Intrusive E4-8
E4.1.5 Waste Disturbing Operations and Activities E4-8
E4.2 VENTILATION CONTROLS FOR SST, DST, AND AWF TANKS E4-13
E4.3 IGNITION SOURCE CONTROLS E4-13
E4.3.1 Ignition Source Control Set 1 . . . . . E4-14
E4.3.2 Ignition Source Control Set 2 . . . . . E4-15
E4.3.3 Exceptions to Ignition Source Control Requirements E4-18
E4.4 GAS MONITORING REQUIREMENTS E4-22
E4.4.1 Entry Monitoring (and Associated Ignition Source Controls) E4-22
E4.4.2 Manned Activities (Continuous Monitoring) E4-23
E4.4.3 Unmanned Operations E4-24
E4.4.4 Monitoring Following a Loss of Ventilation E4-24

E5.0 APPLICATION OF CONTROLS TO FACILITY GROUPS E5-1
E5.1 FACILITY GROUP 1 . . . . . E5-1
E5.2 FACILITY GROUP 2 . . . . . E5-2
E5.3 FACILITY GROUP 3 . . . . . E5-2
E5.4 NONTANK WASTE TRANSFER SYSTEM COMPONENTS E5-3
E5.5 DOUBLE-CONTAINED RECEIVER TANKS E5-3

CONTENTS (cont)

E5.6 244-AR VAULT LAG STORAGE TANKS E5-5
E5.7 INACTIVE MISCELLANEOUS UNDERGROUND STORAGE TANKS E5-8
E5.8 CATCH TANKS E5-13
E5.9 242-S AND 242-T EVAPORATORS E5-14
E5.9.1 242-S Evaporator E5-14
E5.9.2 242-T Evaporator E5-14
E5.10 244-CR VAULT LAG STORAGE TANKS E5-17

E6.0 JUSTIFICATION FOR CONTINUED OPERATIONS AND RESIDUAL RISK FROM CONDITIONS, OPERATIONS, AND ACTIVITIES IN FACILITIES INVOLVING THE FLAMMABLE GAS USQ E6-1
E6.1 EFFECTIVENESS OF CONTROLS FOR MANAGING THE RISK POSED BY FLAMMABLE GASES E6-1
E6.1.1 Effectiveness of Ventilation E6-1
E6.1.2 Effectiveness of Ignition Source Controls E6-2
E6.1.3 Effectiveness of Monitoring Controls E6-3
E6.2 UNCERTAINTIES AND RESIDUAL RISK E6-3
E6.2.1 Tank Flammable Gas Categorization and Grading of Controls E6-3
E6.2.2 Risk From Natural Phenomena E6-4

E7.0 REFERENCES E7-1

APPENDICES

APPENDIX EA Flammable Gas Sample Results and Slurry Gas Lower Flammability Limit

APPENDIX EB Sample Flammable Gas Controls Specification Process

APPENDIX EC Exceptions to Ignition Source Controls

LIST OF FIGURES

E4-1 Ex-Tank, Dome, and Waste Intrusive Regions in Passively Ventilated Tanks E4-5

E4-2 Ex-Tank, Dome, and Waste Intrusive Region in Actively Ventilated Tank (Ventilation On) E4-6

E4-3 Ex-Tank, Dome, and Waste Intrusive Regions in Actively Ventilated Tanks (Ventilation Off) E4-7

LIST OF TABLES

E3-1 Summary of Gas Release Measurements for SHMS Instrumented Double-Shell Tanks E3-7

E3-2 A Comparison of Gas Release Events for SY-101 . . . . . E3-8

E3-3 Summary of Gas Release Measurements for SHMS Instrumented Single-Shell Tanks E3-9

E4-1 Summary of Flammable Gas Controls Strategy E4-2

E4-2 Representative Tank Waste Remediation System Waste Management Operations and Activities E4-11

E4-3 Flammable Gas Ignition Source Control Set Application Requirements E4-17

E4-4 Exceptions to Ignition Source Control Requirements E4-19

E4-5 Flammable Gas Monitoring Requirements E4-25

E5-1 Flammable Gas Facility Group Assignments E5-4

E5-2 Double-Contained Receiver Tank Flammable Gas Control Information. E5-6

E5-3 244-AR Storage Tank Flammable Gas Control Information E5-7

E5-4 Tank Waste Remediation System Inactive Miscellaneous Underground Storage Tank Flammable Gas Control Information E5-9

E5-5 Catch Tank Flammable Gas Control Information E5-15

E5-6 244-CR Vault Storage Tank Flammable Gas Control Information. . . . E5-19

LIST OF TERMS

A	Automatic FIC
AWF	Aging Waste Facility
BIO	Basis for Interim Operation
BPE	barometric pressure evaluation
CAS	Continuous Air Sampler
CGM	combustible gas meter
DCRT	double-contained receiver tank
DOE	U.S. Department of Energy
DST	double-shell tank
FGEAB	Flammable Gas Equipment Advisory Board
FIC	Food Instrument Corporation (level gauge)
FSAR	Final Safety Analysis Report
GMS	gas monitoring system
GRE	gas release event
HEPA	High-efficiency particulate air (filter)
HLW	High Level Waste
IC	ignition source control
IMUST	inactive miscellaneous underground storage tank
JCO	Justification for Continued Operation
LFL	Lower Flammability Limit
LPF	low pressure weather front
LOW	liquid observation well
M	Manual Tape
MIT	multiple instrument tree
NA	not available
nc	insufficient correlation
ND	not detected
NFPA	National Fire Protection Association
O/S	out of service
PAM	portable alpha monitor
PAS	PUREX acidified sludge
PFP	Plutonium Finishing Plant
PMCS	push mode core sampling
ppm	parts per million
ppmv	parts per million by volume
PRC	Plant Review Committee
PUREX	Plutonium Uranium Extraction (Facility)
PVC	polyvinyl chloride
R	Radar
RL	U.S. Department of Energy, Richland Operations Office
RMCS	rotary mode core sampling
SHMS	Standard Hydrogen Monitoring System
SLR	surface level rise
SST	single-shell tank
T/C	thermocouple
TSR	Technical Safety Requirement
TWRS	Tank Waste Remediation System
USQ	Unreviewed Safety Question
VDTT	velocity-density temperature tree
WG	water gauge

LIST OF TRADEMARKS

ENRAF is a trademark of the ENRAF MONIUS Corporation.
FIC is a trademark of FIC Corporation.
Garlock is a trademark of Garlock, Inc.
Teflon is a trademark of E. I. du Pont de Nemours & Co.
Tefzel is a trademark of E. I. du Pont de Nemours & Co.
Teledyne is a trademark of Teledyne Readco.
Tyvek is a trademark of E. I. du Pont de Nemours & Co.
Whittaker is a trademark of ERI Whittaker Company.

DEFINITION OF TERMS

Gas Release Events. Gas release events are flammable gas releases that occur at a relatively high rate. The released gas must include gas that has been generated and retained in waste because gas release rates far exceed the gas generation rates. Gas release events are distinctive although in some tanks releases may be a part of a larger series of events (that is, episodic). Gas release events generally have a sudden onset, a sharp increase in gas release rate above steady state rates, and a short duration compared to the ventilation dilution time constants. Gas release events may occur spontaneously, be caused by outside natural phenomena such as seismic events, or be induced by operation or activity-related disturbances of the waste. The release rate can be so high that dilution by mixing with headspace air and dilution with ventilation cannot prevent flammable conditions from occurring, at least for some duration of time, in some portion of the headspace.

Steady State Releases. A steady state release is an ongoing release of generated flammable gases where the rate of release changes negligibly over time. The release rates are relatively slow (compared to gas release events) because the generation rates are relatively low. Steady state releases cause concern only where the released gases are allowed to accumulate to flammable concentrations in tank system headspace. Such an accumulation takes a relatively long time (hours to months) and can be managed by dilution using ventilation. Because radioactive tank wastes generate flammable gases on an ongoing basis, these releases and their potential accumulation are a chronic hazard for all waste-containing vessels.

Waste Intruding Equipment. Waste intruding equipment includes open-ended or breached objects that are inserted below the waste surface and create an unvented vapor space where flammable gases retained in the waste may accumulate.

The vapor space inside equipment inserted below the waste surface and properly sealed (e.g., thermocouple trees or liquid observation wells [LOWs]) is not considered to be waste intruding equipment.

FLAMMABLE GAS/SLURRY GROWTH UNREVIEWED SAFETY QUESTION: JUSTIFICATION FOR CONTINUED OPERATION FOR THE TANK FARMS AT THE HANFORD SITE

E1.0 PURPOSE

This Justification for Continued Operation (JCO) specifies the safety requirements and provides the basis and control strategy for the flammable gas hazards identified in the flammable gas/slurry growth Unreviewed Safety Question (USQ). These safety requirements provide a basis to perform operations and activities for facilities where this USQ applies.

This page intentionally left blank.

E2.0 SCOPE

The scope of this JCO covers allowed conditions, operations, and activities in 176 high-level waste tanks and associated waste transfer systems; double-contained receiver tanks (DCRTs); catch tanks, including 204-AR-TK-1, the 242-T and 242-S Evaporators; the 244-AR Vault; the 244-CR vault; and inactive miscellaneous underground storage tanks (IMUSTs) relative to flammable gas hazards. The Tank 241-SY-101 flammable gas hazard controls are included in Level I requirements of LA-UR-92-3196. This JCO also applies to the pits associated with the 242-A Evaporator feed tank (241-AW-102) which are within the scope of WHC-SD-WM-SAR-023, *242-A Evaporator/Crystallizer Final Safety Analysis Report (FSAR)*. This JCO specifies:

(1) Flammable Gas Facility Group assignments

(2) Ventilation requirements related to flammable gas hazards

(3) Ignition source control requirements

(4) Flammable gas monitoring requirements

(5) Requirement grading and applicability to the TWRS facilities covered by this JCO.

This page intentionally left blank.

E3.0 DEFINITION OF THE FLAMMABLE GAS UNREVIEWED SAFETY QUESTION

Nuclear waste stored at the Hanford Site generates flammable gases (primarily hydrogen) in most tanks. Hydrogen is generated by radiolysis of water, thermolytic decomposition of organics, and corrosion. Radiolysis also generates ammonia in nitrate- and nitrite-bearing waste, and thermolytic decomposition generates methane. Gas is released continually (that is, steady state) to the tank headspace or is retained by the waste matrix. The retained gas can be released as a spontaneous or induced gas release event that can significantly increase the flammable gas concentration in the tank headspace. The flammable gas hazard and the control strategy are summarized below.

E3.1 ORIGINAL UNREVIEWED SAFETY QUESTION DECLARATION

The flammable gas issue was declared a USQ in May 1990 (Lawrence 1990, *Unreviewed Safety Question-Waste Storage Tank*). The original statement (Dougherty 1990, *Activity Plans for DST/SST*) said, "Recent Westinghouse reviews of the tank headspace flammability identified that the gas under the crust is potentially flammable because nitrous oxide and hydrogen can create flammable mixtures. This is considered an Unreviewed Safety Question." The phenomenon of gases being generated and entrapped in waste slurry and beneath the crust was called "slurry growth." The U.S. Department of Energy, Richland Operations Office (RL) sent notification (Lawrence 1990) to U.S. Department of Energy-Headquarters, which stated, "RL has determined that the matter of hydrogen and nitrous oxide evolution within the material in certain waste tanks and subsequent hypothetical ignition is an Unreviewed Safety Question."

E3.2 REFINEMENTS TO THE UNREVIEWED SAFETY QUESTION DEFINITION

Since 1990, new information has been obtained from tank samples, monitoring data, laboratory experiments, and theoretical modeling and analysis. This information has led to increased understanding of the flammable gas and "slurry growth" phenomena and to refinements in the definition of the flammable gas USQ.

E3.2.1 Flammable Gas Composition

Radioactive waste generates hydrogen through the radiolysis of water, thermolytic decomposition of organic components, and corrosion of a tank's carbon steel walls. Radiolysis and thermolytic decomposition also generate ammonia. Non-flammable gases such as nitrogen, which act as diluents, are also produced. Additional flammable gases, such as methane and an oxidizer, nitrous oxide, are generated by chemical reactions between various degradation products of organic chemicals originally present in the tanks. Volatile or semivolatile organic chemicals in some tanks also produce organic vapors.

E3.2.1.1 Hydrogen. Hydrogen gas has been identified as a major component of flammable gas in tanks. A primary source of hydrogen gas is the thermolysis of organic components which is a function of total organic carbon, the liquid volume of waste, and waste temperature. Radiolytic decomposition of water is

another primary source of hydrogen gas, and it is proportional to the radionuclide content or decay heat load of the tank. Corrosion of waste tank walls also produces hydrogen gas, but it is an insignificant portion of the overall generation rate.

Although hydrogen is a major component of gas samples, and hydrogen generation mechanisms are known, uncertainties still exist in the parameters of the equation used to estimate generation rates. Conservative calculations have been performed to estimate tank vapor space flammable gas concentrations based upon calculated tank gas generation rates or release of a significant fraction of the estimated retained gas in the tank. The resulting equilibrium hydrogen concentrations range from very low (less than 0.1% of the lower flammability limit [LFL]) to values above 25% of the LFL. The measured hydrogen concentrations in tanks sampled to date, including all single-shell tanks (SSTs) that have been calculated to exceed 25% of the LFL, have been lower than the calculated values and well below 25% of the LFL.

E3.2.1.2 Ammonia. In October 1993, an Occurrence Report (RL-WHC-TANKFARM-1993-0090, *Waste Tank 241-SY-101 Safety Analysis Calculation Error for Ammonia Release Mechanism Results in an Unreviewed Safety Question*) was issued because of the measurement of ammonia gas in the headspace of Tank 241-SY-101 during release event "I" and because of increased ammonia background level in the tank following mixer pump operation. The presence of ammonia gas was judged to increase the fuel content of the gases released, however, it did not reduce the ignition energy. This JCO includes the available data, hazard conditions, and controls to address ammonia as an additional flammability hazard.

E3.2.1.3 Methane. In December 1993, an Occurrence Report (RL-WHC-TANKFARM-1993-0105, *Methane Gas in SY-101 Discovered to Add 10% Energy to the Burn Analysis Results Included in the Current Safety Assessment*) was issued because of the measurement of methane gas (1,000 parts per million [ppm]) in the headspace of Tank 241-SY-101 during Window I activities that occurred in June 1993. The presence of methane was judged to increase the fuel content of released gases; however, it did not reduce the ignition energy. This JCO includes the available data, hazard conditions, and controls to address methane as an additional flammability hazard.

E3.2.1.4 Other Gases. Other flammable gases and oxidizers have been identified in waste tanks. Nonmethane organic compounds from past chemical processing operations have been found at very low concentrations (less than 0.1% of the LFL) in the headspaces of most tanks. By using a conservative concentration for methane in the LFL calculations, the contribution of nonmethane organic is assumed to have negligible impact; therefore, no additional hazards or controls for organic vapors are identified in this JCO.

Nitrous oxide is not a flammable gas, but is an oxidizer. Its presence in trapped waste gases can cause the trapped gas mixture to be flammable without needing to mix with air. When gases are released from the waste and diluted with the air in the tank vapor space, the effect of nitrous oxide on the LFL is significantly reduced.

Nitrogen is also a significant component of waste gas. It is not a flammable gas or oxidizer. Its presence will dilute flammable gases in the waste gas mixture, but is not accounted for in calculations of waste gas LFL. This is discussed further in Appendix EA.

E3.2.1.5 Hydrogen Concentration in Slurry Gas at 25% of the LFL. Slurry gas is composed of a number of fuel gases and an oxidizer, nitrous oxide. A major component is hydrogen, and hydrogen concentration is often the only gas measurement available for tank conditions. These measurements are obtained with a Standard Hydrogen Monitoring System (SHMS). Some evaluation and assumptions are needed to establish the correlation between the measured hydrogen concentration and the percent of the LFL for the mixture in the tank where the measurement was taken. In addition to variations in slurry gas composition, many measurements are taken in the tank headspace where the slurry gas has been mixed with headspace air, and oxygen is the predominant oxidizer. An evaluation to establish the hydrogen concentration measurement that represents 25% of the LFL for monitoring SHMS alarm set points and work control action limits is described in WHC-SD-WM-ES-346, *Flammable Gas Tank Safety Program: Technical Basis for Gas Sampling and Monitoring.* This evaluation concludes that a hydrogen measurement of 6,250 parts per million by volume (ppmv) is a conservative value to use for this purpose. Appendix EA evaluates additional data and assumptions to determine a reasonable hydrogen concentration that represents 25% of the LFL when evaluating sample data to better understand the actual condition relative to the LFL. This evaluation concludes that 7,500 ppmv is a reasonable yet conservative value to use for this purpose. However, this JCO continues to use 6,250 ppmv to define the conservative SHMS hydrogen monitoring limit that represents 25% of the LFL when SHMS is used for work activity flammable gas monitoring.

E3.2.2 Vapor Space Accumulation of Flammable Gas Because of Steady State Releases

Flammable gases are generated by all radioactive wastes, and although a fraction of the gas may be retained in tanks containing waste solids, a portion of the generated gas is continuously released at a very low rate. These steady state releases are different from the acute, episodic releases of retained gas. Steady state releases are managed by diluting and removing the gases from the tank headspace through active or passive ventilation to prevent a steady accumulation of gas reaching flammable concentrations. Concentrations have been maintained very low with the existing ventilation configurations. In addition, maintaining low concentrations in headspaces reduces the severity of gas release events by providing relatively clean air in which to dilute the released gases.

For tanks having small waste volumes, low-decay heat loads, small concentrations of organic chemicals, and relatively large headspaces, steady state gas releases can be maintained at low concentrations with passive ventilation. Passive ventilation consists of atmospheric breathing combined with (1) a convective flow through tank openings and tank-to-tank connections caused by the buoyancy effects from gas temperature differences,
(2) a bernoulli flow caused by wind blowing past the tank exhausts, or
(3) instrument purge flows.

A number of SX and C Farm SSTs and all double-shell tanks (DSTs) are actively ventilated with exhausters and breather filters. Although the ventilation for each tank is established by procedure, and the flow rate can be estimated by design parameters or measured with portable instruments, actual tank ventilation flow rates are not monitored because of the lack of installed instrumentation.

Although the calculation of the theoretical steady-state gas concentration is simple and straightforward, the actual concentration is difficult to estimate precisely (Given a steady state gas generation rate (G) and a ventilation rate (V), the steady state gas concentration is defined as G/V.). However, because of uncertainties in calculating the hydrogen generation rates and the lack of accurate ventilation data, it is not possible to accurately calculate the steady state flammable gas concentrations (WHC-SD-WM-ER-594).

The ventilation effects may be reduced in the high points of sealed risers and sealed pits thereby enabling flammable gas to accumulate in concentrations that are higher than in the unobstructed headspace. Buoyancy effects may cause flammable gases to migrate upwards into risers or pits that are isolated from tank ventilation.

Formal vapor samples have been taken from approximately 55% of the SSTs as of January 1, 1997. An additional 31% of the SSTs have combustible gas meter (CGM) readings taken specifically for the TWRS Characterization Program (Appendix EA). The DSTs have been sampled during work activities, but the measurements have not been recorded in the gas sample results database. The actual steady state gas concentrations measured to date are consistently below 25% of the LFL. These measurements have demonstrated that measured values are significantly lower than calculated values for passively ventilated tanks (WHC-SD-WM-ER-526, *Evaluation of Hanford Tanks for Trapped Gas*). The results of the vapor space sampling are published annually in HNF-SD-WM-TI-797, *Results of Vapor Space Monitoring of Flammable Gas Watch List Tanks.*

For the purposes of this JCO, it is concluded that the current ventilation configurations in SSTs, DSTs, and AWF tanks adequately address steady state accumulation of flammable gases. Therefore, ventilation requirements have been upgraded to reflect their importance in managing flammable gases more clearly.

E3.2.3 Gas Accumulation Within the Waste

Some generated gas is retained in the waste. Because retained gases can include fuel (for example, hydrogen, ammonia, methane) and an oxidizer (for example, nitrous oxide), the gases can be in flammable concentrations. Retained gas presents a flammability hazard in the following ways.

- It is theorized that the retained gas could burn below the waste surface if ignited; and the amount of gas, bubble type, size, and distribution could enable flame propagation.

- Gases can be released from the waste and burn in tank domes, connected vapor spaces such as pits, ventilation systems, and outside of tank openings such as ventilation inlet paths or open risers if still above 100% of the LFL.

- The retained gases can be released and ignited inside equipment inserted into the waste, such as core sample drill strings.

E3.2.3.1 Deflagrations Below the Waste Surface. Lawrence (1990) acknowledged that a flammable mixture of gases may exist in the waste thereby creating the possibility of a combustion event below the waste surface. The likelihood and consequences of such an event are not analyzed in the Tank Farm Authorization Basis (except for Tank 241-SY-101). The hazard of igniting flammable gases that may be retained below the waste surface is covered by the flammable gas USQ and the controls in this JCO address this hazard.

E3.2.3.2 Gas Accumulation in Equipment That Penetrates the Waste. On September 28, 1995, an Occurrence Report (RL-WHC-TANKFARM-95-0078, *Vapor Sampling of Core Sampling Drill String Exceed Lower Explosive Limit*) was issued because flammable gas inside the drill string used for push mode core sampling (PMCS) Tank 241-S-107 was in excess of the LFL. Another incident occurred one month later in Tank 241-BY-110. In both incidents, the cause was attributed to encountering gas pockets in the waste which in turn caused flammable gases to enter and accumulate in the drill string in concentrations that were in excess of the LFL. Flammable gas is known to have accumulated in drill strings in several other tanks. Accumulation of flammable gases in waste intruding equipment is considered part of the flammable gas USQ. The controls in this JCO address this hazard.

Tank 241-BY-110 was not listed as a flammable gas USQ tank at the time of the occurrence. The USQ evaluation for these incidents concluded that although a tank may not contain sufficient trapped gas to warrant flammable gas controls because the potential is low for high headspace flammable gas concentrations, it still could be a concern for waste intruding equipment. There may be gas pockets encountered under the waste surface which have a high concentration of flammable gas. A somewhat similar situation occurred in the LOW in Tank 241-SX-104. The LOW accumulated flammable gases that were in excess of the LFL (102% of the LFL as read with a CGM). This event is described in an Occurrence Report (RL-WHC-TANKFARM-1994-0073, *High Flammable Gas and Ammonia Levels Discovered in SX-104 Liquid Observation Well (LOW) During Riser Liner Installation Activities*). The high gas concentrations were attributed to a breach in the LOW below the waste interstitial liquid level. This enabled gases to enter and accumulate in the LOW which is sealed at the top, thus preventing ventilation flow. The headspace in Tank 241-SX-104 was sampled. It was 0% of the LFL and had no indicated ammonia.

This JCO specifies controls to be used with waste intruding equipment in all waste tanks where gas accumulation is a concern. These controls are judged to be adequate to manage risk from potential flammable gas accumulation in waste intruding equipment.

E3.2.3.3. Gas Release Events. Many wastes have the ability to retain a substantial fraction of generated gases in the waste matrix. Periodically, the waste may spontaneously release large volumes of the trapped gas which can

raise the gas concentrations in the headspace to flammable levels in a very short time. Many activities also may trigger an induced release of retained gas. These spontaneous or induced gas release events (GREs) contrast sharply with the continuous steady state releases described earlier.

For the purpose of applying controls, each DST, SST, DCRT, AWF tank, IMUST, and catch tank has been placed in one of four Facility Groups depending on whether the waste is postulated to present a hazard from large or small GREs and whether the GREs may be spontaneous or occur only during waste disturbing (induced) operations or no GREs are postulated. Ignition source controls and monitoring requirements are applied at times when and in locations where flammable conditions resulting from GREs can be present, as appropriate to this grouping scheme. Five tanks within the scope of this JCO (excluding Tank 241-SY-101) that have had significant GREs are conservatively postulated to have the potential for large spontaneous and large induced GREs. These tanks have been assigned to Facility Group 1. If a tank is postulated to have the potential for a large induced GRE but only a small spontaneous GRE, it is assigned to Facility Group 2. The remaining SSTs, which show no propensity for spontaneous GREs but may produce a small induced GRE, are assigned to Facility Group 3. Facilities with little or no waste solids capable of retaining gases are categorized as non-GRE. All Facility Groups assume that the subject tanks undergo steady state gas generation at all times.

The grouping of facilities reflects a conservative approach even in light of uncertainties in the underlying methodology. It also enables a graded application of controls based on perceived hazards and frees less hazardous tanks from unnecessarily restrictive or burdensome controls. This method also enables a degree of simplicity in applying control sets to specific tanks.

Measured Gas Releases. Information about spontaneous GREs has been gathered by the SHMSs that continuously sample tank headspace hydrogen concentrations. The systems are installed on six DSTs and 22 SSTs. Tables E3-1, E3-2, and E3-3 summarize data from the DSTs, 18 of the 22 SSTs, and headspace concentration predictions from the GRE evaluation (WHC-SD-WM-ER-526).

Table E3-1. Summary of Gas Release Measurements for SHMS Instrumented Double-Shell Tanks. (1 sheet)

Tank	Maximum measured H_2 concentration	When maximum was measured[1]	Observed release periodicity	Predicted concentration following acute release[2]
241-AN-103	3,000 ppm (10% LFL[3])	08/22/95	Once since 10/94	334% LFL (SLR[4]) 301% LFL (BPE[5])
241-AN-104	5,000 ppm (17% LFL)	10/08/95	Every 3-5 months	505% LFL (SLR) 246% LFL (BPE)
241-AN-105	17,000 ppm (57% LFL)	08/21/95	Sporadic. 15 months between last two events	743% LFL (SLR) 411% LFL (BPE)
241-AW-101	8,800 ppm (29% LFL)	10/94	About every 2 months	231% LFL (SLR) 233% LFL (BPE)
241-SY-101	53,000 ppm (177% LFL) 51,200 ppm (174% LFL)	12/04/91 09/03/92	Every 3-4 months (none since mixer pump installation)	825% LFL (SLR) 572% LFL (BPE)
241-SY-103	2,900 ppm (10% LFL)	05/95	About every 2 months	79% LFL (SLR) 57% LFL (BPE)

Notes:
[1]Dates are provided in the mm/dd/yy format.
[2]WHC-SD-WM-ER-526, 1997, Evaluation of Hanford Tanks for Trapped Gas, Rev. 1B, Westinghouse Hanford Company, Richland, Washington.
[3]LFL - Value shown is based on the use of 30,000 ppm of H_2 being measured when the tank headspace reaches the LFL.
[4]SLR - Tank headspace concentration (as a percent of LFL) predicted using the surface level rise (SLR) methodology.
[5]BPE - Tank headspace concentration (as percent of LFL) using the barometric pressure evaluation (BPE) methodology.

Table E3-2. A Comparison of Gas Release Events for SY-101. (1 sheet)

Event date	08/27/91	12/04/91	04/20/92	09/03/92	02/02/93	06/26/93
Event start time	0933	1116	2002	1661	0124	1904
Days since event	102	99	138	136	152	144
Surface level drop. (in.)[2]	5.5A	13.0M	7.2R	13.2R	8.5 (FIC)	9.75M
Estimated slurry-gas (ft^3)[3]	4043[3]	2565[3]	4600[4]	10480[7]	6500[7]	7000[3]
Estimated H_2 volume (ft^3)[4]	N/A	2883[4], 1078[5]	1530[4]	3773	2340	3200
Maximum tank pressure (in w.g.)	-2.82	+6.84	-2.0	+5.37	-0.079	-0.93
Maximum exhaust flow (cfm)	550	1300	675	2125	1170	1512
Maximum H_2 concentration in exhaust (vol%)						
Whittaker	N/A	N/A	N/A	N/A	2.25	2.77
Teledyne	0.51	2.69	1.34	0.82	N/A	N/A
Chromatograph	N/A	N/A	N/A	ND	0.21	3.4
Grab mass spectroscopy	N/A	2.17	1.18	N/A	N/A	N/A
Maximum H_2 concentration in riser 17B (vol%)						
Whittaker	0.38	5.30	1.36	5.12	2.74	2.73
Cont. mass spectroscopy	0.28	O/S[6]	1.48	3.51	2.06	3.12
Grab mass spectroscopy	N/A	N/A	O/S	N/A	N/A	N/A
Maximum N_2O concentration exhaust (vol%)						
Chromatograph	N/A	N/A	1.05	ND	N/A	N/A
Grab mass spectroscopy	N/A	1.87	1.09	N/A	N/A	N/A
Fourier transform infrared spectrometer	N/A	N/A	N/A	N/A	O/S	3.25
Maximum NH_3 concentration (ppm)						
OVM	N/A	438	1507	1060	N/A	N/A
Fourier transform infrared spectrometer	N/A	N/A	N/A	N/A	N/A	13,000

Notes:
[1] Dates are in the mm/dd/yy format.
[2] A = Automatic FIC, M = Manual Tape, R = Radar.
[3] Using 736 ft^3/in. assuming the gas is under a pressure of 2 atmospheres.
[4] Using integrated Whittaker H_2 concentration and average exhaust flow.
[5] Using integrated Teledyne H_2 concentration and integrated exhaust flow.
[6] ND = not detected, N/A = not available, O/S = out of service.
[7] Using the method outlined in Reynolds, D.A., 1993, Gas Release from Window G and Protocol for Calculating Gas Release (Internal Memo 7K210-93-502 to G. D. Johnson, January 4), Westinghouse Hanford Company, Richland, Washington.

Table E3-3. Summary of Gas Release Measurements for SHMS Instrumented Single-Shell Tanks. (2 sheets)

Tank	Maximum observed H_2 concentration change	Date maximum observed release occurred[1]	Periodicity	Predicted concentration following acute release[2]
241-BY-103	No release evident	--	--	0% LFL (SLR[3]) 26% LFL (BPE[4])
241-BY-106	1060 ppm (grab sample)	09/22/95	None evident	123% LFL (SLR) nc[5] (BPE)
241-BY-109	790 ppm	02/07/96 (LPF[6])	None evident	0% LFL (SLR) 27% LFL (BPE)
241-S-102	1000 ppm	03/96	None evident	190% LFL (SLR) 226% LFL (BPE)
241-S-111	1750 ppm	12/11/95 (LPF)	None evident	80% LFL (SLR) 181% LFL (BPE)
241-S-112	No release evident	--	--	30% LFL (SLR) nc (BPE)
241-SX-101	No release evident	--	--	0% LFL (SLR) 28% LFL (BPE)
241-SX-102	No release evident	--	--	30% LFL (SLR) 93% LFL (BPE)
241-SX-103	700 ppm	12/11/95 (LPF)	None evident	2% LFL (SLR) 216% LFL (BPE)
241-SX-104	200 ppm	12/11/95 (LPF)	None evident	6% LFL (SLR) 11% LFL (BPE)
241-SX-105	400 ppm	12/11/95 (LPF)	None evident	87% LFL (SLR) nc (BPE)

Table E3-3. Summary of Gas Release Measurements for SHMS Instrumented Single-Shell Tanks. (2 sheets)

Tank	Maximum observed H_2 concentration change	Date maximum observed release occurred[1]	Periodicity	Predicted concentration following acute release[2]
241-SX-106	600 ppm	12/11/96 (LPF)	Small releases during LPFs	67% LFL (SLR) 78% LFL (BPE)
241-SX-109	200 ppm	12/11/95 (LPF)	None evident	0% LFL (SLR) nc (BPE)
241-U-103	1200 ppm	12/11/95 (LPF)	Small releases during LPFs	77% LFL (SLR) 161% LFL (BPE)
241-U-105	1000 ppm	02/07/96 (LPF)	Small releases during LPFs	270% LFL (SLR) 129% LFL (BPE)
241-U-107	600 ppm	12/11/95 (LPF)	Small releases during LPFs	42% LFL (SLR) 87% LFL (BPE)
241-U-108	1800 ppm	02/20/96 (LPF)	Small releases during LPFs	301% LFL (SLR) 179% LFL (BPE)
241-U-109	700 ppm	12/11/95 (LPF)	Small releases during LPFs	81% LFL (SLR) 118% LFL (BPE)

Notes:
[1] Dates are in the mm/dd/yy format.
[2] WHC-SD-WM-ER-526, 1997, Evaluation of Hanford Tanks for Trapped Gas, Rev. 1B, Westinghouse Hanford Company, Richland, Washington.
[3] SLR - Tank headspace concentration (as a percent of LFL) predicted using the surface level rise (SLR) methodology WHC-SD-WM-ER-526.
[4] BPE - Tank headspace concentration (as percent of LFL) using the BPE methodology WHC-SD-WM-ER-526.
[5] nc - There was insufficient correlation between barometric pressure changes and waste level changes to use the methodology.
[6] LPF - Low pressure weather front.

DSTs. Data are documented for six of the 28 DSTs with SHMS. Tables E3-1 and E3-2 show Tank 241-SY-101 has had headspace concentrations that exceeded the LFL. Tanks 241-AN-105 and 241-AW-101 have had hydrogen concentration measurements that exceeded 25% of the LFL for slurry gas in air. The hydrogen concentrations for all other instrumented tanks are less than 25% of the LFL. The measured concentrations are significantly less than the concentrations predicted by the GRE evaluation (WHC-SD-WM-ER-526). The data for Table E3-1 are from Wilkins (*Tank 241-AN-103 Data Review Update; Tank 241-AW-101 Data Review Update; Tank 241-AN-104 Data Review Update; Tank 241-AN-105 Data Review Update*). The data for Table E3-2 are from Wilkins (1995), *Recent Gas Release Events in 241-SY-103*. SHMS data is obtained on an ongoing basis and evaluated. The results are reported in HNF-SD-WM-TI-797 on an annual basis.

SSTs. Studies into the growth of bubbles in settled solids have demonstrated that the presence of a supernatant liquid layer enables large, buoyancy-induced rollovers that trigger large, spontaneous GREs (PNL-10120, *Mechanisms of Gas Bubble Retention*; PNL-10740, *Gas Bubble Retention and Its Effect on Waste Properties: Retention Mechanisms, Viscosity, and Tensile and Shear Strengths*; PNL-10893; *The Effect of Dilution on the Gas Retention Behavior of Tank 241-SY-103*). Because SSTs usually do not contain a supernatant layer (or at most a very small one), large buoyancy-induced rollovers are not possible.

The available SHMS data for SSTs, which are summarized in WHC-SD-WM-ER-576, *Compilation of Hydrogen Data for 22 Single Shell Flammable Gas Watch List Tanks*, is consistent with this hypothesis. The data indicate small gas releases that appear to coincide with low-pressure barometric fronts, but no other phenomena. In addition to SHMS data, vapor grab sample data was obtained during the calibration and baselining effort of SHMS start up. Table E3-3 summarizes the release events for tanks where SHMS data is available. As indicated in Table E3-3, however, the highest measured concentrations are well below 25% of the LFL, even when instrument errors and calibration drift are accounted for in the SHMS Whittaker cells.

E3.2.3.4 Spontaneous Gas Release Events. Five DSTs within the scope of the JCO (Tanks 241-AN-103, 241-AN-104, 241-AN-105, 241-AW-101, and 241-SY-103) have been observed releasing large gas quantities at times when no operations or activities disturbed the waste. In addition, Tank 241-SY-101 exhibited spontaneous GREs before the operation of the mixer pump in this tank. Because Tank 241-SY-101 has an approved safety analysis, it is not within the scope of this JCO. The large "spontaneous" gas releases in these tanks are believed to be caused by instabilities that result from density differences between the gas retaining waste and the overlying supernatant liquid. As waste entrains more gases, it becomes more buoyant. When the density differences are large enough to overcome the forces that keep the gas retaining wastes in place, a waste rollover occurs and gas is released.

All DSTs with significant sludge to retain gas are considered to have the potential for spontaneous releases. They all have significant amounts of supernatant liquid and may be able to create instabilities that result from density differences between the gas-retaining waste and the supernatant liquid.

However, DSTs (other than the above-mentioned five and excluding Tank 241-SY-101) have not shown evidence of large spontaneous GREs based on historical monitoring of waste surface level rises and falls, tank vacuum levels, and waste temperature profiles. These DSTs are postulated to be prone to small spontaneous GREs.

As previously noted, SSTs are not likely to exhibit a large, spontaneous GRE, but some have exhibited small spontaneous releases. Other postulated release mechanisms for large releases have been reviewed by a team assembled by RL to evaluate the technical basis used by the Westinghouse Hanford Company in analyzing the hazards associated with flammable gas storage and release. The findings are documented in WHC-SD-WM-ER-594. The general view of the team is that the only mechanism likely to produce a rapid spontaneous release of a large fraction of a tank's retained gas is the buoyancy-induced rollover. Based on the physical conditions and phenomena affecting rollovers, it was considered improbable for such a release to occur in SSTs. Based on this understanding, this JCO does not postulate large spontaneous GREs as a significant hazard in SSTs. However, certain SSTs have exhibited small spontaneous GREs.

E3.2.3.5 Induced Releases (Waste Disturbing Operations and Activities). Retained gas may be released during many waste disturbing operations or activities. It is hypothesized that these operations or activities may release gas directly from the waste in the local volume where waste is disturbed or indirectly by triggering a release from a larger volume, such as by triggering a rollover.

E3.2.3.6 Experience During Waste-Disturbing Activities. Forty-nine waste sampling activities and 38 LOW installation activities were evaluated to determine whether these activities caused a gas release (Schofield 1996a, *Evidence of Release Events During Waste Intrusive Activities in Flammable Gas Watch List (FGWL) and Proposed FGWL Tanks*). Based on the temperature data from 87 activities, the evaluations concluded that no gas releases were evident; however, waste level data could not rule out the possibility of two gas releases in the mid-1980s. Surface level data showed the waste level reading dropped several inches about the same time that one LOW installation and one sampling event occurred during the 87 activities. It is not possible to reconstruct whether the level reading drop was caused by an FIC or manual tape adjustment or a plummet flush or how close to the waste intrusion event the level reading change occurred, although one level reading change may have occurred a day or two before the intrusion.

Of 27 recent waste core sampling events where gas monitoring was available, small gas releases were indicated by CGM readings from the tank headspace during three events. The gas release volume was estimated for two of the events. Based upon CGM readings and conservatively assuming the entire tank headspace was at the indicated CGM value, less than 0.68 m^3 (24 ft^3) of hydrogen was released during the sampling event in Tank 241-S-102, and less than 1.33 m^3 (47 ft^3) of hydrogen was released in the Tank 241-U-109 sampling event (Schofield 1996b, *Volume of Gas Released for a Given Rise % Rise in the LFL in S-102 and U-109*). Readings from SHMS cabinets on the same tanks showed negligible hydrogen increases at the same time the CGMs showed the increases.

This provides evidence that the gas releases were small and did not fill the tank headspace to the CGM concentration. Therefore, the volume of hydrogen released in each event was likely to be less than the 0.71 to 1.42 m^3 (25 to 50 ft^3) range.

Although the fraction of retained gas released for each operation or activity has not been quantified, it is postulated for this JCO that waste disturbing operations can be graded into local and global waste disturbing operations. Local waste disturbing operations can cause a small GRE in any tank, and a global waste disturbing operation can cause a large GRE in tanks that may retain a large amount of gas.

E3.2.3.7 Large Versus Small Gas Release Events. Actively ventilated tanks, which are DSTs, AWFs, and some SSTs, normally operate with the headspace at a slight vacuum. However, large gas releases can pressurize the headspace above atmospheric pressure. For this reason, the flow of headspace gases into pits, out open risers to the atmosphere, and through the ventilation system to other connected tanks must be postulated.

Tank 241-SY-101 experienced several gas release events prior to mitigation pump operation that were large enough to create flammable conditions in a large portion of the headspace and to pressurize the headspace. Table E3-2 summarizes two events where the pressure increased from -498 Pa (gauge) [-2 in. WG] to approximately 1,449 Pa (gauge) [+6 in. WG]. Gas concentrations were measured in the ventilation system about 4.9 m (15 ft) from Tank 241-SY-101 upstream of connections to other tanks. During GREs, the concentrations in the ventilation system are lower than in the headspace as demonstrated by the December 4, 1991, event. This GRE resulted in concentrations in the headspace of 53,000 ppm while vent duct concentrations remained below the LFL (maximum measured concentration was 26,000 ppm). The event also caused pressurization in the headspace that increased the ventilation flow rate from 0.23 m^3/s (500 cfm) to 1 m^3/s (2,125 cfm).

The headspace of passively ventilated tanks is normally at atmospheric pressure; therefore, large gas release events could cause a positive pressure and outflow of gases into pits, breather filters, and open risers. Large releases that can cause a significant portion of the headspace to exceed the LFL are postulated to cause flammable conditions outside the headspace in passively ventilated tanks.

Tanks estimated to retain relatively small amounts of gas are judged less likely to present a risk of creating flammable conditions outside the tank. Small releases would probably be mixed and diluted by headspace air before exiting. For this JCO, tanks with estimated retained gas amounts too small to cause the headspace concentration to exceed 25% of the LFL (if 25% of the gas is released per WHC-SD-WM-ER-526) are considered too unlikely to create flammable conditions in vapor spaces located outside the headspace to warrant ignition source controls in these areas.

Small GREs pose some risk of creating localized flammable regions within the headspace (for example, plumes) until mixing occurs with headspace air. However, they are unlikely to cause flammable conditions outside the tank headspace.

E3.2.3.8 Estimated Gas Release Potential. WHC-SD-WM-ER-526 has documented 177 tanks that have been evaluated for gas retention and release potential. The first step was to estimate the quantity of retained flammable gases in the tank waste using the quick screen. If the quick screen method predicted headspace concentrations of less than 25% of the LFL, no further evaluation was done. If it predicted headspace concentrations of greater than 25% of the LFL, one of two additional methods was used to estimate retained and releasable gas: using waste surface rise to calculate that amount of retained gas or using the waste level variation with corresponding barometric pressure changes to indicate retained gas. This screening process identified tanks where the released gas was calculated to cause hydrogen concentrations to exceed 25% of the LFL in a well mixed tank headspace. Tables E3-1 and E3-3 show that the predicted concentrations following a gas release event WHC-SD-WM-ER-526 are much higher than the measured concentrations for GREs monitored to date.

E3.3 FACILITY GROUP (FG) ASSIGNMENT

The TWRS-managed facilities affected by this JCO have been divided into four Facility Groups to enable control grading and minimize operational complexity. Control grading recognizes that flammable gas hazards vary widely and that technical uncertainties prohibit precise determinations about the hazard potentials of each facility. Facility Group assignments for ancillary facilities are described in Section E5.0 of this appendix.

E3.3.1 Facility Group 1

Facility Group 1 is made up of the facilities of greatest concern with respect to the flammable gas hazard. Specifically, the five tanks (241-AN-103, 241-AN-104, 241-AN-105, 241-AW-101, and 241-SY-103) within the scope of this JCO that have undergone observed, significant GREs are conservatively postulated to have the potential for large spontaneous and induced GREs. The level of rigor for these tanks is the maximum possible to manage the risk while continuing to perform essential waste storage functions and meet planned TWRS mission objectives.

E3.3.2 Facility Group 2

Facility Group 2 is made up of tanks that are postulated to have the potential for a large induced GRE but only a small spontaneous GRE. For the purposes of this JCO, SSTs that fail the GRE evaluation are considered to have the potential for large induced releases. SSTs that fail the GRE evaluation are those that are estimated to retain sufficient gas amounts to cause the headspace concentration to exceed 25% of the LFL if 25% of the gas is released. However, SSTs are not postulated to undergo large spontaneous releases.

Facility Group 2 reflects the uncertainty in fully understanding tank flammable gas hazards and characterizing tank specific contents and behaviors. It contains all DSTs and AWFs that are not in Facility Group 1 and all SSTs that are documented to "fail" the GRE evaluation.

The DSTs and AWFs are within their design life and are integral to the safe waste storage and disposal mission. They will receive new waste from other Hanford Site facilities and will undergo liquid reductions, waste consolidation, multiple transfers, and mixing. Procedures are in place to minimize the likelihood that these operations would create conditions resulting in large spontaneous gas release behavior. However, it is recognized that some operations may result in increased gas generation and retention. Therefore, it is appropriate to categorize these facilities in Facility Group 2 or higher. In the unlikely event that significant GRE behavior develops in these facilities, they will be moved to Facility Group 1.

Several ancillary facilities have been assigned to Facility Group 2 because they contain significant sludge and significant supernate, which are postulated to present the potential for gas retention and release, either spontaneously or as a result of waste disturbing operations.

E3.3.3 Facility Group 3

Facility Group 3 includes all remaining SSTs. The controls for Facility Group 3 reflect the widely accepted judgment that many SSTs, particularly those that have been stabilized, pose a significantly lower risk from flammable gas hazards than those in Facility Group 1 or Facility Group 2.

Three tanks (241-SX-104, 241-AX-101, and 241-AX-103) currently on the Flammable Gas Watch List are placed into Facility Group 3. The inclusion of these SSTs into Facility Group 3 is based on the results of the GRE evaluation (WHC-SD-WM-ER-526). The Watch List status for tanks is based on different evaluation methodologies that were used in the past.

E3.3.4 Facility Group non-GRE

Facility Group non-GRE consists of the facilities for which no GRE hazard is postulated. Flammable gas hazards are limited to steady state generation, release, and accumulation caused by low ventilation conditions. Waste containing facilities with little or no waste solids are in this group because gas retention and potential release are not postulated unless waste solids are present to retain the gas. Because these facilities contain little or no waste solids and gas accumulation is not postulated, waste intrusive and waste intruding locations and associated ignition source controls are not applicable. Facilities placed in the group include: catch tanks; DCRTs; 244-AR TKs 001, 003, and 004; 242-T TK-B1 and the evaporator vessel; and IMUSTs 231-W-151-001, 231-W-151-002, 241-S-302B, 241-TY-302B. No SSTs, DSTs, or AWF tanks are included in this group.

This page intentionally left blank.

E4.0 TANK CONTROL STRATEGY

To effectively manage the risk associated with steady state accumulation, this JCO requires passive or active ventilation for tanks to ensure that steady state flammable gas concentrations are well below the LFL. For certain facilities where adequate ventilation has not been verified by a means such as gas sampling, installed equipment is required to meet ignition source controls or be deenergized. To manage the risks associated with retained gases and GREs, specific ignition source controls and continuing monitoring requirements are applied on a graded basis to Facility Groups 1, 2, and 3 tanks depending on the work performed.

Table E4-1 summarizes the application of the control strategies to address each flammable gas hazard discussed in Section E3.2.2, "Vapor Space Accumulation of Flammable Gas Because of Steady State Releases" and E3.2.3, "Gas Accumulations within the Waste" of this appendix. Each strategy is discussed in the following section.

E4.1 TANK REGIONS

This JCO stipulates specific equipment and work controls for any TWRS-managed tank, container, or receiver that could present a waste-related flammable gas hazard and lead to a fire or explosion. These controls shall apply to all Facility Group tanks unless the equipment or work meets the definition of nonintrusive, as follows. For unique situations that are not clearly addressed by the following definitions and configurations, the applicable controls will be addressed by the TWRS Plant Review Committee (PRC) or their designee.

E4.1.1 Nonintrusive

Nonintrusive includes all equipment located in parts of the tank or ventilation system isolated from the tank head space by a seal barrier (i.e., compressive mechanical barriers, adhesive barrier, ventilation system seal loops, drain line seal loops, welded enclosures). The opening diameter is defined as the diameter of the smallest opening into the waste intruding equipment vapor space. For an actively ventilated system (when the ventilation system is operating), the inside of the ventilation system duct downstream of the first mixing point with flow from another tank is a nonintrusive region.

Table E4-1. Summary of Flammable Gas Controls Strategy.

Flammable Gas Hazard	Control Strategy
Steady state accumulation in headspaces	1. Dilution by ventilation and 2. Gas monitoring (characterization sampling and work activity entry gas monitoring) 3. If adequate ventilation cannot be verified, apply ignition source controls (Set 2) or deenergize
Accumulation in sealed risers and sealed pits	1. Ignition source controls (Set 2) at all times and 2. Work activity entry gas monitoring
Ignition of flammable gas retained within the waste	1. Ignition source controls (Set 1) at all times
Large spontaneous GREs	1. Ignition source controls (Set 2) in ex-tank and dome intrusive locations at all times 2. Continuous gas monitoring during manned work activity
Small spontaneous GREs	1. Ignition source controls (Set 2) for dome-intrusive locations at all times and 2. Continuous gas monitoring during manned work activity
Large induced GREs	1. Ignition source controls (Set 2) in ex-tank and dome intrusive locations during waste disturbing operations and activities and 2. Continuous gas monitoring during manned waste disturbing activities
Small induced GREs	1. Ignition source controls (Set 2) for dome intrusive locations during waste disturbing operations and activities and 2. Continuous gas monitoring during manned waste disturbing activities
Accumulation in waste intruding equipment	1. Purge or flush before energizing equipment and during use of equipment or 2. Ignition source controls (Set 1) at all times

There are no JCO related flammable gas controls for nonintrusive equipment or work, conversely, equipment and work meeting the definition of intrusive (ex-tank intrusive, dome intrusive, or waste intrusive) shall be subject to the control strategy specified in this JCO. These intrusive tank regions are defined in Sections E4.1.2, "Ex-Tank Intrusive" through E4.1.4, "Waste Intrusive" and shown in Figures E4-1, E4-2, and E4-3 for passively ventilated tanks, actively ventilated tanks, and actively ventilated tanks where the ventilation system is not operating, respectively. The control strategy is based, in part, on the region in which equipment and activities are located.

E4.1.2 Ex-Tank Intrusive

Ex-tank intrusive includes the following:

- All vapor spaces that have a direct connection to the tank headspace, but do not meet the definition of dome or waste intrusive.
- Pits, such as pump pits and transfer pits, that are not isolated from the tank dome by a seal barrier.
- The environment outside of tank openings that are directly connected to the headspace out to a distance of 18 opening diameters; 4.57 m (15 ft); or the boundary of temporary containment devices, whichever is shorter. This portion of the ex-tank region is only a concern from a flammable gas standpoint, when a large GRE is postulated (i.e., Facility Group 1 at all times, Facility Group 2 during global waste disturbing operations). Flammable gas is not postulated to accumulate in these open air regions due to steady state gas releases.
- Inside ventilation system duct work, downstream of the first mixing point with flow from another tank, when the ventilation system is not operating. (When the ventilation system is operating, the inside of ventilation system ductwork downstream of the first mixing point with flow from another tank is not an intrusive region because of mixing and dilution provided by flow from other tanks.)
- Activities in direct contact with the outside of the boundary between the ex-tank region and nonintrusive regions, such as welding or grinding, that could result in an ignition source inside the boundary. Equipment in these areas shall have ignition source control requirements.
- The ex-tank intrusive region also includes the environment outside a tank opening, which is directly connected to the dome space, out to the shortest of the following distances:

- 18 opening diameters[1]
- 4.57 m (15 ft)
- The boundary of temporary containment devices.

E4.1.3 Dome Intrusive

Dome intrusive includes any location within the tank between the top of a riser and the surface of the waste. It also includes ventilation ducting up to the first mixing point with flow from another tank. Because the filter housing and connecting ducting extends the riser, the dome intrusive region extends to the open-air inlet/outlet of breather filters or active ventilation system inlet filters or bags/sleeving around an open riser. However, if shut down, the ventilation system downstream of the first mixing point is considered an ex-tank intrusive region. A sealed pit which is open to the tank dome region (a dome intrusive region) is considered dome intrusive region.

The dome intrusive region definition also applies to work and activities, such as welding or grinding, that are in direct contact with the outside of the boundary and that could result in an ignition source inside the boundary (e.g., welding on the outside of risers or breather filters).

During the operation of salt well pumps, salt well pits are considered part of the dome intrusive region. This designation and the accompanying control requirements are made according to WHC-SD-WM-ER-571, *Evaluation of Hydrogen Release During Saltwell Pumping for Tanks T107, S110 and S108* which concluded that released gases could be channeled to the pit by the salt well, thereby creating localized flammable conditions in the pit while the rest of the dome intrusive region is well below the LFL.

Ignition source controls are applied to equipment installed in the region at the top of sealed risers and pits. Higher concentrations may result in this region because of buoyancy effects and the reduced ventilation provided to these potentially stagnant areas. Based on anecdotal evidence from entry monitoring and the expected effects of diffusion, accumulation of gas concentrations above the LFL in this region is judged to be unlikely. Ignition source controls that are consistent with this judgement are applied. Once the riser or pit is opened and entry monitoring confirmed and gas concentrations are less than 25% of the LFL, normal GRE controls are applicable.

[1]The opening diameter is defined as the hydraulic diameter of the most restrictive portion of the flow path.

Figure E4-1. Ex-Tank, Dome, and Waste Intrusive Regions in Passively Ventilated Tanks.

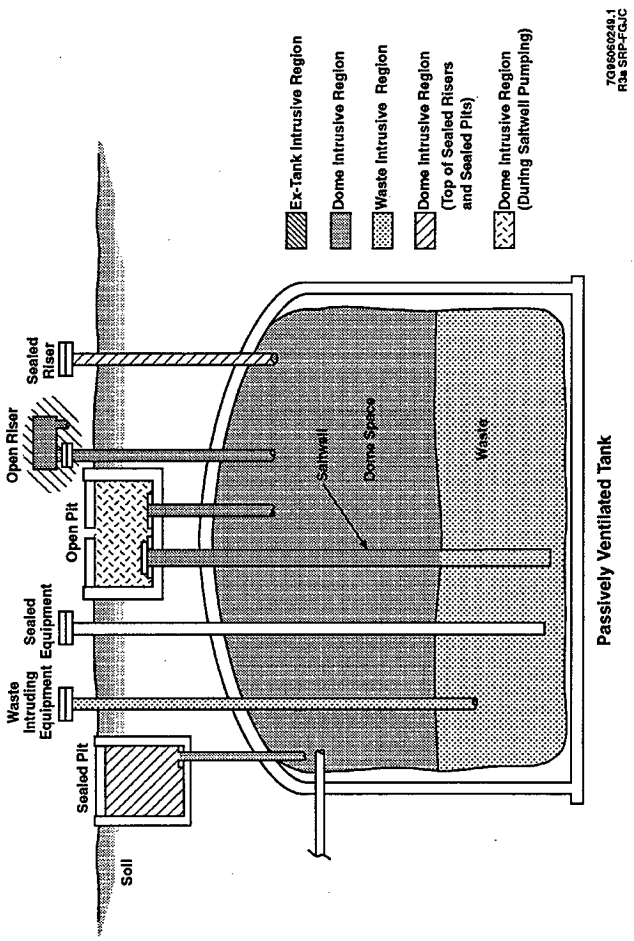

Figure E4-2. Ex-Tank, Dome, and Waste Intrusive Region in Actively Ventilated Tank (Ventilation On).

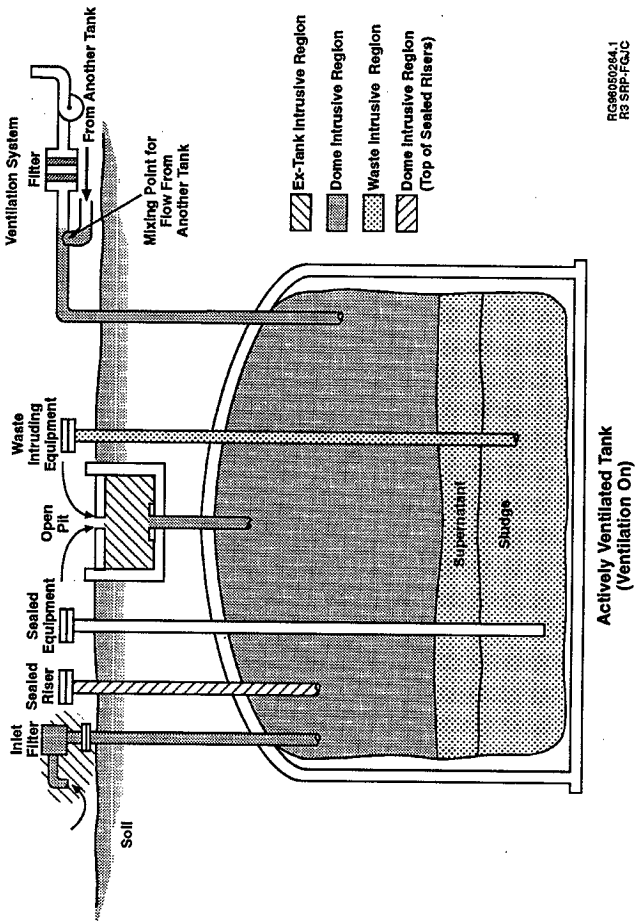

Figure E4-3. Ex-Tank, Dome, and Waste Intrusive Regions in Actively Ventilated Tanks (Ventilation Off).

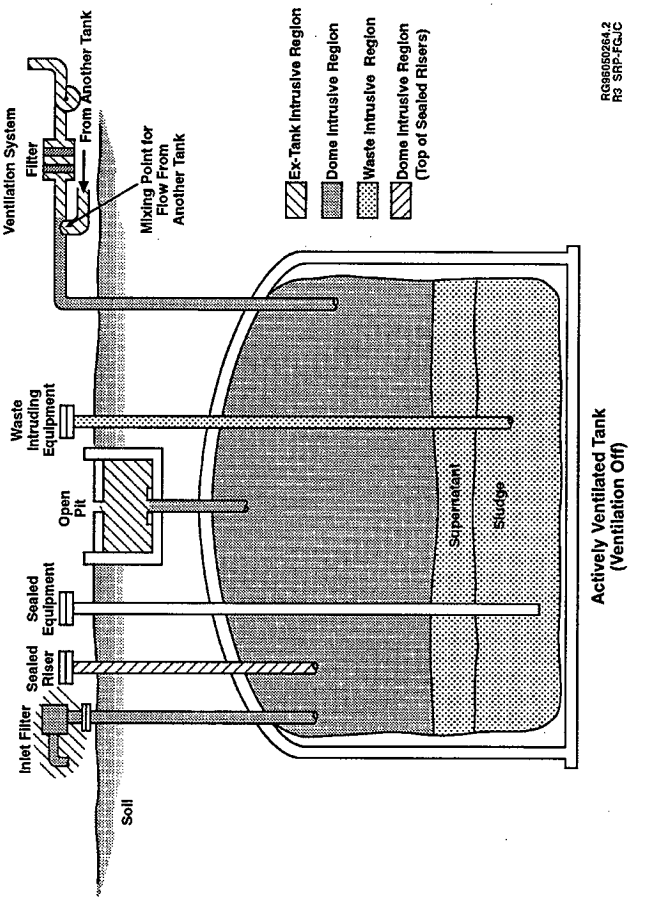

E4.1.4 Waste Intrusive

Waste intrusive refers to the region below the waste surface. It also includes vapor space inside the waste intruding equipment, where flammable gas retained in the waste may accumulate. This region is defined so that gas retained within the waste is considered as a possible flammable environment. Significant gas retention is not postulated unless waste solids such as sludge or salt cake are present. Equipment that comes in contact with gas bubbles retained within the waste is therefore considered to be in a waste intrusive location.

Waste intruding equipment includes open-ended and breached objects that are inserted below the waste surface that may create an unvented vapor space where flammable gases retained in the waste may accumulate. Waste intruding equipment includes core sample drill pipes, pump suction legs, and weight factor dip tubes.

Equipment, such as thermocouple trees and LOWs, inserted below the waste surface and properly sealed is not considered waste intruding equipment. For LOWs, where the potential for accumulation for flammable gas only exists if the LOW is breached, swabbing for contamination will be performed at each entry and before potential ignition sources (LOW gamma or neutron scanning equipment) are inserted into the LOW. If swabbing indicates that the LOW is breached, waste intruding gas monitoring and entry requirements shall be followed. Equipment insertion and operation shall not proceed if flammable gases are above 25% of the LFL. Equipment used in a breached LOW shall meet ignition source control (Set 1) requirements.

E4.1.5 Waste Disturbing Operations and Activities

Waste disturbing operations or activities include all work that may result in significant motion under the waste surface. Waste disturbing operations and activities include global waste disturbing and local waste disturbing operations defined as follows:

- **Global Waste Disturbing.** Operations and activities that cause a large global disturbance of the waste. These activities include, but are not limited to: waste transfers into or out of a tank; the removal, installation, or operation of mixer pumps; and large water additions.

- **Local Waste Disturbing.** Operations and activities that disturb only a small, local portion of the waste. Operations and activities that disturb only a small, local portion of the waste, such as removal of air lances or thermocouple trees, are quite different than operations that can cause a large global disturbance such as the operation of a mixer pump.

Examples of global and local waste disturbing operations and activities are shown in Table E4-2.

Waste disturbances may also occur because of seismic events. No special controls are imposed by this JCO that relate to flammable gas deflagrations which may be caused by a seismic event.

This page intentionally left blank.

Table E4-2. Representative Tank Waste Remediation System Waste Management Operations and Activities. (2 sheets)

Representative Ex-Tank Intrusive Operations and Activities
• Vent and balance activities • Exhauster (maintenance/operations) • High-efficiency particulate air (HEPA) filter change out without primary tank isolation • De-entrainer pad change out • Operation of portable exhausters • Ventilation system modifications • Filter housing relocation • Filter inlet installation • Filter changing • Pit cover block/cover plate removal • Pit jumper setup and valve alignment for transfer • Pit leak detection • Pit activities • Gas sampling in pits and ventilation systems • Activities outside of open risers • Use of greenhouse/plastic sleeving around open risers • Drywell vans/on top of tanks, vehicle control[1] • Construction/tie-in activities[1]
Representative Dome Intrusive Operations and Activities
• Riser preps (asbestos removal) • Riser examination with high intensity lamp • Riser geometry measurements • Shield plug installation and removal • Swabbing risers for radiation readings • Flange work • Gauge plugs • Gas sampling with heated vapor probes • SHMS/GMS • Ammonia gas sampling • ENRAF[2]/FIC/manual tape waste level measurements • Zip cord waste level measurements • ENRAF/FIC/manual tape repair, replacement, removal • DST high level detection and alarm • Use of camera, video, lights • Light Duty Utility Arm inspection missions • Surface moisture monitoring system • Equipment removal (that is located in the dome space and not inserted below the waste surface) including retrieval devices and de-con • Water wands used to flush contamination from equipment in the tank dome space • Welding and grinding on the outside boundary or in a location where sparks or hot slag can enter the tank.

Table E4-2. Representative Tank Waste Remediation System Waste Management Operations and Activities. (2 sheets)

Representative Waste Disturbing Operations
Global Waste Disturbing Operations • Salt well pumping • Submersible pump operation • Emergency pumping of supernatant • Mixer pump operation • Transfer pump operation • Air lift circulator operation • Jet pump operation • Chemical additions • Large water additions (for example, >500 gallons) • Waste addition/removal or transfers Local Waste Disturbing Operations • Lancing (<500 gallons of water added to waste) • Hydraulic jetting (with ultra-high-pressure) • LOW installation • Thermocouple (T/C) tree installation • Salt well installation • Multiple instrument tree (MIT) installation • Instrumentation Installation/Operation Void meter Viscometer Densitometer readings Sludge level (weight) measurements Penetrometer testing • Mixer pump installations • Transfer pump installation • Equipment removal if inserted below the waste surface, including retrieval devices and de-con Sludge weight removal Air lance removal Specific gravity probe removal LOW removal T/C tree removal MIT removal Pump removal • Sampling Push mode core sampling Auger Grab Light Duty Utility Arm sampling missions

Notes:
[1]Within 15 ft or 18 opening diameters from the tank opening, whichever is less.
[2]ENRAF is a trademark of the ENRAF MONIUS Corporation.

E4.2 VENTILATION CONTROLS FOR SST, DST, AND AWF TANKS

In-situ measurements have demonstrated that steady-state flammable gas concentrations are consistently below calculated values and 25% of the LFL in passively and actively ventilated tanks WHC-SD-WM-ER-526. Because current ventilation methods maintain steady state gas concentrations below 25% of the LFL, controls similar to existing ventilation controls should be maintained to manage the risk associated with gas added to the headspace by steady state and small induced or spontaneous releases. These controls require almost constant operation of DST and AWF exhausters. For passively ventilated tanks, breather filters are verified to be operable at least every 12 months and breather filter isolation valves are verified to be open weekly.

These historical operating practices have been used to form the basis for upgrading the operating requirements to controls that reflect the importance of ventilation performance in controlling flammable gas concentrations caused by steady state releases. Loss of normal ventilation can result in the build up of flammable gas concentrations to greater than the LFL for a number of tanks. The loss of normal ventilation condition has been assessed in HNF-SD-WM-CN-116, *Calculation Note: Hydrogen Generation Rates at Steady-State Flammable Gas Concentrations for Single Shell Tanks*, and HNF-SD-WM-CN-177, *Calculation Note: Calculation of Hydrogen Release Rate at Steady State for Double Shell Tanks*, for SSTs and DSTs respectively. These assessments form the basis for TSR surveillance frequencies and action times for the ventilation controls for this hazard. Section E5.0 describes ventilation of ancillary facilities.

E4.3 IGNITION SOURCE CONTROLS

Ignition source controls are applied to equipment installed or used during work activities in tank intrusive locations on a graded basis according to Facility Groups 1, 2, and 3. Additionally, controls shall be applied to all equipment used in waste intrusive locations at all times.

The location classifications in and around facilities are in accordance with National Fire Protection Association (NFPA) guidelines. They are documented in HNF-SD-WM-HC-017, *Electrical Classification Study for the Flammable Gas Watch List Tanks*, and will be updated according to available data, if necessary.

The ignition source controls in this JCO are applied when and where flammable gases are postulated to be present. The controls are applied to a Facility Group or to an activity/operation type. Field implementation, however, accounts for the specific details of the facility and activity/operation under consideration. Implementation of JCO controls ensures that the ignition controls are met across facility configurations and the planned operations and activities. TSRs implement JCO controls. The ignition source controls described in the JCO are the baseline in meeting the intent of industry standards.

A process is followed to specify the allowed safe conditions and control requirements to address the flammable gas hazards as described in this JCO. A sample process is described in Appendix EB. Ignition source control

requirements and work activity compliance with the requirements is documented by this process. In cases where direct compliance with the ignition source controls cannot be accomplished, the equipment and activity can be evaluated to determine if equivalent safety can be established. A Flammable Gas Equipment Advisory Board (FGEAB) has been formed to determine when specific work level control implementation provides equivalent safety to the baseline controls in this JCO. The development of equivalencies shall involve analysis, evaluation, or testing and will include appropriate documentation, review, and approval. The FGEAB, consisting of TWRS Engineering, representatives from the Hanford Electrical Codes Board, and the contractor NFPA Interpretive Authority, will review the design based on equivalent safety, and approve the equipment and its installation.

E4.3.1 Ignition Source Control Set 1

All equipment installed or used during work activities is evaluated and Set 1 is used for that portion of the equipment that can make contact with the gases retained in the waste (in waste intrusive locations) or undiluted gases which may be present in the vapor space of waste intruding equipment. The basis is that flammable conditions may be present in these locations; therefore the highest level of control consistent with NFPA 70 Class I, Division 1 is appropriate. The application of this control set is as indicated in Table E4-3.

1. Mechanical tooling, equipment, and materials (including lubricants, adhesives, gaskets, corrosion inhibitors, epoxies) shall be constructed of spark-resistant material, or shall be rendered incapable of sparking with sufficient energy to combust hydrogen, or shall have been analyzed and evaluated to be incapable of sparking with sufficient energy to combust hydrogen under the applied conditions (Johnson 1990, *Selection of Spark Resistant Tool Material for use in 101-SY*). Material compatibility shall be evaluated for thermite reaction potential (Ermold 1996, *Actions to Response to Spark Reported During Work on Tank 241-U-109*).

2. Electrostatic ignition sources shall be controlled by providing bonding or grounding according to NFPA 77, Recommended Practice on Static Electricity .

3. Exposed polymer materials shall be rendered incapable of electrostatic charge or discharge potential with sufficient energy to combust hydrogen by design or through acceptable workaround practices or by evaluation of the applied conditions (NFPA 77).

4. The surface temperatures of heat-generating devices (this includes potential compression heating mechanisms and open flames) shall not exceed 416 °C (780.8 °F). The surface temperature is limited to a maximum of 160 °C (320 °F) if the device can contact the waste and cause ignition by triggering exothermic (organic-nitrate) reactions in the waste. Internal temperatures of heat generating devices may exceed these temperatures (NFPA 70, National Electricity Code,

Articles 500-Hazardous (Classified) Locations and 501-Class 1 Locations) if the heat source is isolated (pressurized) from the gas environment, or if the design of the device enclosure meets the requirements for explosion-proof housings.

5. Electrical equipment shall be designed to meet NFPA 70, Class 1, Division 1, Group B criteria (NFPA 70) or provide equivalent safety. At a minimum, this shall be interpreted to mean that no single point failure of energized equipment can result in an arc, spark, or gas burn propagation to the environment external to the source enclosure (NFPA 70). In the case of waste-submerged equipment containing potential ignition sources, demonstration by design that the equipment is nonsparking under normal operation and is designed to be isolated from the waste environment is an acceptable alternative.

6. Shutdown of purged and pressurized electrical equipment and purged and pressurized heat-generating equipment, upon loss of protective gas pressure or flow, shall be automatic by design as defined by NFPA 496, Standard for Purged and Pressurized Enclosures for Electrical Equipment, Type X pressurization.

7. Interlocked start-up of purged and pressurized electrical or purged and pressurized heat-generating equipment shall only be allowed when the system senses preset safety limits. An example would be adequate protective gas pressure established as defined by NFPA 496 (NFPA 77). If pressurized enclosures are used to isolate energized components, a minimum of 4 enclosure volumes shall be purged through the enclosure for energized components, and/or 10 volumes shall be purged for enclosed motors before controlled start-up of the system components (NFPA 70 and 496).

E4.3.2 Ignition Source Control Set 2

Set 2 is applied to vapor space locations (ex-tank intrusive and dome intrusive) when a GRE is postulated to create flammable conditions. Set 2 is similar to Set 1 except that requirements (5), (6), and (7) are modified to allow the use of more readily available equipment. The basis is that the flammable conditions are unlikely. Therefore, the use of equipment that meets the intent of NFPA 70 Class I, Division 2 or equivalent is adequate. The application of this control set is as indicated in Table E4-3.

1. Mechanical tooling, equipment, and materials (including lubricants, adhesives, gaskets, corrosion inhibitors, epoxies) shall be constructed of spark-resistant material, or shall be rendered incapable of sparking with sufficient energy to combust hydrogen, or shall have been analyzed and evaluated to be incapable of sparking with sufficient energy to combust hydrogen under the applied conditions (Johnson 1990). Material compatibility shall be evaluated for thermite reaction potential (Ermold 1996).

2. Electrostatic ignition sources shall be controlled by providing bonding or grounding according to NFPA 77.

3. Exposed polymer materials shall be rendered incapable of electrostatic charge or discharge potential with sufficient energy to combust hydrogen by design or through acceptable workaround practices or by evaluation of the applied conditions (NFPA 77).

4. The surface temperatures of heat-generating devices (this includes potential compression heating mechanisms and open flames) shall not exceed 416 °C (780.8 °F). The surface temperature is limited to a maximum of 160 °C (320 °F) if the device can contact the waste and cause ignition by triggering exothermic (organic-nitrate) reactions in the waste. Internal temperatures of heat generating devices may exceed these temperatures (NFPA 70) if the heat source is isolated (pressurized) from the gas environment, or if the design of the device enclosure meets the requirements for explosion-proof housings.

5. Electrical equipment shall be designed to meet NFPA 70, Class I, Division 2, Group B criteria (NFPA 70) or provide equivalent safety. As a minimum, this shall be interpreted to mean the equipment is nonsparking under normal operation or, if normally sparking, the sparking component(s) shall be continuously isolated (purged and pressurized) from the potentially flammable gas environment, or the design of the device enclosure shall be of sufficient strength (explosion-proof) to prevent propagation of a gas burn to the environment external to the enclosure.

6. Automatic shutdown or alarming with manual shutdown will be required upon loss of protective gas pressure or flow as defined by NFPA 496 Type Z pressurization.

7. Automatic or manual start-up of purged and pressurized electrical or purged and pressurized heat-generating equipment shall only be allowed on system sensing of preset safety limits, such as adequate protective gas pressure established as defined by NFPA 496. If pressurized enclosures are used to isolate energized components, a minimum of 4 enclosure volumes shall be purged through the enclosure for energized components, or 10 volumes shall be purged for enclosed motors before controlled start-up of the system components (NFPA 70, NFPA 496). When combustible gas detection shutdown systems are employed, start-up of equipment shall only be allowed once measured acceptable flammable gas levels are indicated.

Table E4-3. Flammable Gas Ignition Source Control Set Application Requirements.

Tanks	During Non-Waste Disturbing Activities		During Local Waste Disturbing Activities		During Global Waste Disturbing Activities		Waste Intrusive or Inside Waste Intruding Equipment
	Ex-Tank Intrusive	Dome Intrusive	Ex-Tank Intrusive	Dome Intrusive	Ex-Tank Intrusive	Dome Intrusive	
Facility Group 1	2	2	2	2	2	2	1
Facility Group 2	2B	2	2B	2	2A	2	1
Facility Group 3	2B	2B	2B	2A	2B	2A	1
244-AR TK-002	2B	2B	2B	2A	2B	2A	1
244-CR TKs-001, -002, -003	2B	2B	2B	2A	2B	2A	1
Non Tank Waste Transfer System	2B		2B		2B		Non-GRE
DCRT	2B		2B		2B		Non-GRE
244-AR TKs-001/-003/-004	2B		2B		2B		Non-GRE
244-CR TK-011	2B		2B		2B		Non-Gre
Catch Tanks and Catch Tank Pits	2C		2C		2C		Non-GRE
242-S	2B		2B		2B		Non-GRE
242-T	2C		2C		2C		Non-GRE
W-151-001, W-151-002, S-302B, TY-302B	2C		2C		2C		Non-GRE

Notes:

1 - Ignition Source Control Set #1 applies at all times

2 - Ignition Source Control Set #2 applies at all times

2A - Ignition Source Control Set #2 applies only for the duration of the waste disturbance

2B - Ignition Source Control Set #2 applies to activity related equipment and materials until work activity entry monitoring requirements (Table E4-5) are met. Ignition source controls are not required by 2B (ignition source controls during entry monitoring) in the ex-tank intrusive region defined as the environment outside of tank openings that are directly connected to the headspace out to a distance of 18 opening diameters; 4.92 m (15 ft); or the boundary of temporary containment devices, whichever is shorter.

2C - Ignition Source Control Set 2 applies to installed equipment, Ignition Source Control Set #2 applies to activity related equipment and materials until work activity entry monitoring requirements (Table E4-5) are met.

Non-GRE These are Facility Group Non-GRE because there is little or no waste solids, gas accumulation is not postulated for these facilities and therefore, waste intrusive and waste intruding locations and associated ignition source controls are not applicable.

E4.3.3 Exceptions to Ignition Source Control Requirements

Table E4-43 covers equipment and materials that do not meet the ignition source control requirements and do not have safety equivalency with ignition source controls (Set 1 or Set 2) established by the TWRS FGEAB. Most of these items are used throughout tank farm field activities. A few items are specific to certain activities, such as grab sampling and PMCS. Therefore, the exceptions in Table E4-4 are required to perform tank farm operations.

A number of items in Table E4-4 are considered to be "de minimus" exceptions because they are judged to pose a negligible risk as ignition sources. These de minimus items are judged to represent uncontrolled, but negligible spark sources. Most are associated with manned work. In these cases, the work location monitoring requirements, as called for in this JCO, are in force. Several items, however, involve the materials that make up installed equipment. These items are therefore present in the tanks even when monitoring is not required.

Additional items in Table E4-4 are equipment, materials, and activities that do not meet the JCO ignition source control requirements and do not have safety equivalency established by the TWRS FGEAB. These items do not meet the definition of "de minimus." Flammable gas risk management, therefore, depends on flammable gas monitoring (standard monitoring as required in JCO section E4.4 or augmented monitoring as indicted in Table E4-4), ventilation, and/or work practices (for example, slow insertion of non-spark-resistant thermocouple trees). These practices provide confidence that a spark source would not be present when a flammable gas environment exists. This second category contains items that are evaluated to have an associated small, incremental increase in risk, but the benefits associated with their use justify their continued application in the field. It is judged that the risk posed by these items is acceptable for ongoing operations. This decision is based on a qualitative assessment of the importance of the waste management and safety-related activities and operations that must use these items. Appendix EC describes the justification for each exception listed in Table E4-4.

Table E4-4. Exceptions to Ignition Source Control Requirements. (3 sheets)

Item #	Authorized Activities
1	Personal Protective Equipment (i.e., raingear, airline respirator hoses, rubber/plastic and canvas gloves, respirator masks, rubber/plastic boots, masking tape, Tyvek coveralls) are authorized for use in ex-tank locations, but may be used in a minimally dome intrusive location (e.g., at the plane of a riser).
2	Wearing of plastic badges, badge holders, and dosimeters.
3	Installation of, removal of, working on, or extended presence of nonconductive lead blankets in ex-tank (global waste disturbing) regions. Lead blankets shall not be used in a vapor trapping configuration
4	Installation, removal, or extended presence of nonconductive adhesive tape (e.g., green tape, white tape) in ex-tank regions, dome intrusive regions, and in waste intruding equipment.
5	Use of Portable Alpha Monitor (PAM) in ex-tank regions, dome intrusive regions, and in waste intruding equipment.
6	Use of nonconductive poly bottles in ex-tank and dome intrusive regions.
7	Use of zip cords in ex-tank regions, dome intrusive regions, and in waste intruding equipment (e.g., inside failed LOWs).
8	Use of nonconductive plastic ropes in ex-tank regions.
9	Use of nonconductive plastic tubing in ex-tank regions and dome intrusive regions (e.g., aerosol testing). Nonconductive plastic tubing shall not be used below the plane of a riser.
10	Installation and removal of Garlock gaskets in ex-tank regions.
11	Use of nonconductive plastic garden type sprayer (approximately 5 gallons, hand pump pressurizer and brass spray wand) in ex-tank regions.
12	Use of grab sample cap, sampling and sludge weight retrieval device and coated steel cable in ex-tank and dome intrusive regions.
13	Installation and removal of polyvinyl chloride (PVC) riser liners in dome intrusive regions.
14	Presence of PVC liners for manual tapes, FICs, flushing, ignition source control (IC) 1 compliant equipment, and authorized activities in dome intrusive regions.
15	Presence of manual tapes in ex-tank and dome intrusive regions.
16	Installation and removal of manual tapes in ex-tank and dome intrusive regions.

Table E4-4. Exceptions to Ignition Source Control Requirements. (3 sheets)

Item #	Authorized Activities
17	Installation of, removal of, working with, or extended presence of the pipe wiper (Frisbee) during PMCS with Truck 1, 2, and 3, in ex-tank and dome intrusive regions.
18	Installation of, removal of, or extended presence of plastic cam-lock caps during PMCS with Trucks 1, 2, or 3 in ex-tank and dome intrusive regions.
19	The presence of extension cords in ex-tank regions. Power strips (and outlet strips) are not allowed in these regions. Energized lines shall not be connected or disconnected in an ex-tank region.
20	Installation, removal, and use of low and high pressure spray whirlie and operation of valve handles in ex-tank and dome intrusive regions.
21	Electrical bonding is not required for removal or installation of fittings on openings less than or equal to 2.54 cm (1 in.) inside diameter during intrusive location entry.
22	Use of Type 4 vapor sampling head in ex-tank and dome intrusive regions. Conductive plastic sleeving shall be used during Type 4 vapor sampling.
23	Use of electric impact wrench in ex-tank regions.
24	Use of Type 4 vapor cart in ex-tank and dome intrusive regions.
25	Open pit work related equipment (e.g. Pike Poles, T-Bars, Sockets, Chokers, Shackles, and Bull Hooks) in ex-tank regions. Installation and removal of process blanks, vapor seals, jumpers, and leak detectors in ex-tank regions. Continuous monitoring in the tank dome and the pit is required during use of this exception.
26	Installation and removal of valve handles in ex-tank regions. This activity is performed in closed pits when no global waste disturbing activities are in progress.

Table E4-4. Exceptions to Ignition Source Control Requirements. (3 sheets)

Item #	Authorized Activities
27	Installation, removal, presence of, or movement of cover blocks, riser flanges, shield plugs, tank installed waste and non waste intrusive equipment items (e.g. T/C trees, steel LOWs, pumps, manual tapes, FICs, ENRAFs, radar gauges, heated vapor probes, MITs, corrosion probes, velocity-density temperature trees (VDTTs), water lances, void fraction meter, core sampling drill string, salt well screens, dip tubes, cameras/lights, viscometer, auger, sampler) each as used in ex-tank or dome intrusive or waste intrusive regions. Work packages and procedures will include practical measures to reduce the likelihood of a mechanical spark when equipment movement performed as part of an operation or activity can create mechanical sparks. Such measures may include: limiting insertion speeds, water bathing of equipment, prevention of contact with other non-spark resistent materials by use of collars or bumpers, use of critical lift procedures where appropriate. This exception does not cover the operation of large mixer pumps that might cause significant motion of installed equipment. Any other ignition source hazards (other than mechanical spark source potential) must comply with this JCO's requirements for ignition source controls.
28	Use of pressure switches, limit switches, and leak detector for the salt well pumping system for Tank 241-T-104. Continuous monitoring of the pump pit is required during pumping with automatic shutoff at 10% of LFL.
29	Use of pressure switches, limit switches and leak detectors for the salt well pumping system for Tank 241-BY-109 after it is re-categorized to a Facility Group 3 tank. Continuous monitoring of the pump pit required during pumping with automatic shutoff at 10% of the LFL.
30	Presence of intact fiberglass and Tefzel LOWs in Facility Group 2 or 3 tanks or presence of failed fiberglass LOWs as waste-intruding equipment. (Work in a known failed LOW shall meet IC Set 1 controls).
31	Use of Continuous Air Samplers (CASs) in ex-tank regions in Facility Group 1 tanks or Facility Group 2 tanks during global waste disturbing operations. CASs shall be shutdown if 10% of the LFL is exceeded in the ex-tank area. Motor shall be placed outside the ex-tank region. Continuous monitoring in the tank dome and the pit is required during use of this exception.

E4.4 GAS MONITORING REQUIREMENTS

Flammable gas monitoring is used as part of the flammable gas hazard management strategy for the following reasons:

- To prevent the introduction of an uncontrolled or errant spark source into a location when and where flammable gas concentrations are above a level of concern for fire, deflagration, or detonation. This includes entry monitoring for all manned work to be performed in intrusive locations for the facilities within the scope of this JCO. It includes monitoring of intrusive locations in non-GRE facilities before using equipment that does not meet ignition source controls in situations where ventilation has not been verified to be adequate to address steady state accumulation hazards, such as when operating pumps in catch tanks (Section E5.8). This function also is used if required ventilation is not operable so that equipment that does not meet ignition source controls can be shut down before concentrations of concern develop.

- To prevent the continued use of equipment and materials that may present uncontrolled spark sources or errant spark sources if flammable gas concentrations of concern develop during manned work activities. This includes manned activities in facilities when and where the effects of GREs must be considered. Continuous monitoring is required to satisfy this function.

- To halt global waste disturbing operations (e.g., salt well pumping) in passively ventilated tanks if pit or dome space concentrations exceed 25% of the LFL. Because equipment in use during such operations meets ignition source controls, monitoring is not used as the primary safety approach to preventing an accident. Therefore, periodic monitoring is adequate for this function.

These functions and requirements are discussed in the following paragraphs. The application of the monitoring requirements are identified in Table E4-5.

E4.4.1 Entry Monitoring (and Associated Ignition Source Controls)

Flammable gas concentrations in intrusive work locations must be verified to be below the flammable gas work control limits before beginning manned work. This requirement shall be applied to all manned work activities in waste containing vessels when the manned work activity is near an opening in the vessel containment. Meeting this requirement will ensure that flammable conditions in the work space are not present as a result of steady state accumulation and/or recent GREs.

For manned activities on tanks, the entry monitoring requirements are:

1. Monitor at breather filter or vent duct prior to start of activity.

2. For work in pits, monitor in pit prior to the start of pit work.

3. Monitor inside riser (passive or active ventilation) or allow for a one minute pause with riser opened (active ventilation only) prior to start of dome intrusive activities.

4. For dome intrusive work, follow 1 and 3 above, plus monitor below bottom of riser (passive or active ventilation) or in vent duct upstream of first mixing point (active ventilation only) prior to start of activity.

5. For manned activities inside of waste intruding equipment, monitor in the vapor space prior to start of activity.

For manned activities in non-tank waste transfer system regions, monitor in the vapor space where the activity is to be performed.

Manned work shall not begin or proceed if flammable gas concentrations are greater than 25% of the LFL except for gas sampling and necessary actions to reduce gas concentrations, deenergize ignition sources, etc. Installed qualified equipment (equipment that is qualified in accordance with the appropriate ignition source controls) may continue to operate (not be deenergized) if flammable gas concentrations are greater than 25% of the LFL.

Until gas concentrations of less than 25% of the LFL are verified, the equipment used to perform this verification shall meet the requirements of ignition source controls (Set 2).

E4.4.2 Manned Activities (Continuous Monitoring)

Because of the possibility of flammable conditions developing during work as a result of a GRE depending on the flammable gas Facility Group and activity type, work space (ex-tank intrusive or dome intrusive) monitoring is continued. This means using a continuous monitor, such as a SHMS, or portable CGMs that monitor continuously and is set to alarm before flammable gas concentration exceeds 25% LFL. Ignition source controls are also imposed in these locations to prevent ignition in the unlikely event that flammable conditions develop. The potential for an errant (uncontrolled) spark is judged to be higher during manned work activities even though all equipment must meet ignition source controls for manned activities and unmanned operations. The chance of an errant spark is judged to be higher during manned activities because equipment is being manipulated, and the chance for human error is present. Therefore, a distinction is made between manned and unmanned activities. Manned activities require continuous monitoring and work stoppage if the concentrations exceed 25% of LFL; unmanned operations generally do not require monitoring. Monitoring thus provides an additional safety measure to the ignition source controls during these activities. Therefore, all manned work activities must immediately halt if flammable gas concentrations exceed 25% of the LFL, with exceptions such as gas sampling and necessary actions to reduce gas concentrations, and deenergizing ignition sources.

E4.4.3 Unmanned Operations

Unmanned operations, such as waste transfers and operation of air lift circulators or mixer pumps in actively ventilated tanks, do not require continued monitoring because installed equipment must meet ignition source control requirements, and errant spark sources (that might result during manned activities) are minimal. Released gases will be diluted and swept from the tank by the ventilation flow. Adequate protection is provided by requiring installed equipment to meet ignition source controls.

During unmanned global waste disturbing operations in passively ventilated tanks, flammable gas concentrations from GREs may persist for a long time because of low ventilation flows. Because continued operation in this condition is judged to be imprudent if the flammable gas concentration is greater than 25% of the LFL, periodic monitoring is required. For long duration operations such as salt well pumping, periodic monitoring can be defined as follows:

- Monitor dome space and salt well pit once an hour for 5 hours following initiation of pumping
- Monitor dome space and salt well pit once a day for the next 3 days (or once each 24 nominal hours run time)
- Monitor weekly or once each 168 hours nominal run time). Revise sampling period:
  - If less than 15% of LFL, sample every 7 days, not to exceed 10 days
  - If greater than 15% to $\leq$ 25% LFL, sample daily
  - If greater than 25% LFL, stop waste disturbing operation.

E4.4.4 Monitoring Following a Loss of Ventilation

Monitoring is used to cause the shutdown of uncontrolled spark sources if flammable gas concentrations of concern develop because of a loss of required ventilation. Ventilation in many TWRS facilities is provided to prevent the accumulation of flammable gas caused by steady-state releases and to dilute released gases before they reach ventilation system equipment that does not meet ignition source control requirements (such as pressure switches and continuous air monitors in DST ventilation systems). If this ventilation is lost, flammable gas concentrations may increase, but in a steady manner. Following a loss of ventilation, periodic monitoring is required to trend the flammable gas concentrations and actions are taken to eliminate the uncontrolled spark sources if levels of concern are reached.

Table E4-5. Flammable Gas Monitoring Requirements.

Tanks	During Manned* Non-Waste Disturbing Activities		During Manned* Local Waste Disturbing Activities		During Manned* Global Waste Disturbing Activities		During Unmanned Non Waste Disturbing Activities	During Unmanned Local and Global Waste Disturbing Activities	Inside Waste Intruding Equipment
	Ex-Tank & Dome Intrusive (Riser or Duct only)	Dome Intrusive in Dome Space	Ex-Tank Intrusive	Dome Intrusive	Ex-Tank Intrusive	Dome Intrusive			
Facility Group 1	A2 or C, A3 for pit work	C	A2 or C	C	A2 or C	C		No applicable activities	E
Facility Group 2	A1	C		C	A2 or C	C		D	E
Facility Group 3	A1	B		C		C		D	E
244-AR TK-002	A1	B		C		C			E
244-CR Tks-001, -002, -003	A1	B		C		C			E
Non Tank Waste Transfer System	A1								
DCRT	A1	B							
244-AR TKs-001, -003, -004	A1	B							
244-CR TK-011	A1	B							
Catch Tanks and Catch Tank Pits	A1	B	G		G		G	G	
242-S	A1	B							
242-T	A1	B	F		F		F	F	
W-151-001, W-151-002, S-302B, TY-302B	A1	B	F		F		F	F	

A1 - 1. Monitor at breather filter (passive ventilation) or vent duct (active ventilation), when present, prior to start of activity.
2. Monitor inside riser (passive or active ventilation) or one minute pause with riser opened (active ventilation only) prior to start of dome intrusive activities. For open pit work, monitor inside pit prior to start of activity. This entry monitoring does not require the monitoring of the ex-tank region defined as the environment outside of tank openings that are directly connected to the headspace out to a distance of 18 opening diameters; 4.92 m (15 ft); or the boundary of temporary containment devices, whichever is shorter.

A2 - Continuous monitoring in ex-tank area during activity (See TSR Control AC 5.11.a.3).

A3 - Continuous monitoring of pit and dome space prior to and during work with tools listed as exceptions for pit work in Table E4-4, for pits connected to a Facility Group 1 DST vapor space.

B - A1 above, plus monitor below bottom of riser (passive or active ventilation) or in vent duct upstream of first mixing point (active ventilation only) prior to start of activity.

C - B above, plus continuous monitoring in dome intrusive regions where work is being performed such as below bottom of riser (passive or active ventilation), inside of breather filters, inlet filters or temporary glove bags, or in vent duct upstream of first mixing point (active ventilation only) during activity.

D - 1. No monitoring requirements for DSTs.
2. Monitor per requirements in TSR Control AC 5.11.b.2 for salt well pumping.

E - Monitor inside waste intruding equipment vapor space prior to entry. Monitoring outside of waste intruding equipment (e.g., open drill string) is not required.

F - Monitor prior to energizing or using equipment that does not meet IC 2 controls.

G - Monitor tank and pit prior to energizing or using installed equipment that does not meet IC 2 controls, or within 7 days prior to making transfer.

* Manned refers to personnel performing work related to activity only.

This page intentionally left blank.

E5.0 APPLICATION OF CONTROLS TO FACILITY GROUPS

The flammable gas Facility Group assignments are shown in Table E5-1 and described below. Flammable gas ignition source controls and monitoring requirements are graded based on the Facility Group assignment.

E5.1 FACILITY GROUP 1

Five tanks (241-AN-103, 241-AN-104, 241-AN-105, 241-AW-101, and 241-SY-103) that have undergone observed, significant GREs are conservatively postulated to have the potential for large spontaneous and induced GREs that could create flammable conditions in the ex-tank region. For this reason, stringent controls are applied to these Facility Group 1 tanks.

Ventilation controls shall be maintained to mitigate steady state gas accumulation.

Because of the possibility of a large spontaneous GRE in Facility Group 1 tanks, ignition source controls (Set 2) (Section E4.3.2, "Ignition Source Control Set 2") shall be applied to the ex-tank and dome intrusive regions at all times. Additionally, continuous flammable gas monitoring (Section E4.4, "Gas Monitoring Requirements") shall be in place for ex-tank and dome regions during ex-tank intrusive and dome intrusive manned work activities. These controls are aimed at managing the risk of ignition in the event of a large spontaneous or induced GRE that could cause flammable gas conditions and pressurization of the dome region and result in an outflow of flammable gases to ex-tank regions.

Ignition source controls (Set 1) (Section E4.3.1, "Ignition Source Control Set 1") shall be applied to all waste intrusive or waste intruding equipment.

The work practice of reviewing Facility Group 1 tank data before manned work is being pursued as a Defense-in-Depth measure (McClusky 1996, *Flammable Gas Waste Tank Data Review*). The data review is performed to determine, as closely as possible, whether gas retention and release behavior has changed in an unexpected manner or whether the data support the existence of a "potential near-term" gas release event. This review is performed before dome intrusive, waste intrusive, and waste disturbing activities in these tanks. The JCO provides controls that are appropriate assuming a GRE can occur during the activity. The predictions about tank GRE behavior are sufficiently uncertain that this review process does not lend itself to be included as an Authorization Basis control and, therefore, will be implemented outside of the JCO.

E5.2 FACILITY GROUP 2

Facility Group 2 tanks differ from those in Facility Group 1 in that they are postulated not to be subject to large spontaneous GREs. The only large GREs postulated for Facility Group 2 tanks are those triggered by global waste disturbing operations. Because gas outflow to the ex-tank region is only postulated during global waste disturbing operations and activities, ignition source controls can be limited.

During non-waste disturbing and local waste disturbing operations, ignition source controls (Set 2) (Section E4.3.2) shall apply to the dome intrusive region only because of the decreased likelihood of gas release that can result in flammable concentrations outside the dome region. Similarly, continuous monitoring (Section E4.4) is required in the dome intrusive region only during manned work activities. These are judged to be sufficient to mitigate hazards posed by small spontaneous and induced GREs.

Global waste disturbing operations are postulated to be capable of triggering a large induced GRE that could result in flammable concentrations in ex-tank regions. For the duration of the global waste disturbing operation, ignition controls (Set 2) shall be extended to the ex-tank region. Continuous monitoring is also required for these ex-tank regions during manned activities. After completing a global waste disturbing activity and verifying that flammable conditions do not exist, these ex-tank controls can be removed for the ex-tank locations.

Ignition source controls (Set 1) (Section E4.3.1) shall be applied to all waste intrusive or waste intruding equipment.

Finally, ventilation controls (Section E4.2, "Ventilation Controls for SST, DST, and AWF Tanks") shall be maintained in Facility Group 2 tanks to mitigate steady state gas accumulation.

E5.3 FACILITY GROUP 3

Because Facility Group 3 tanks are postulated to be subject only to small induced GREs, its control set is the least restrictive. No event is postulated to cause a GRE that could cause flammability conditions to exist beyond the dome region. The control set is limited to the dome and waste regions.

During non-waste disturbing operations, ignition source controls (Set 2) shall apply to the initial entry. After flammable gas concentrations are verified as less than 25% of the LFL, the ignition source controls may be removed. Continuous gas monitoring is not required for non-waste disturbing activities if the initial sample is below 25% of the LFL.

Any local or global waste disturbing operation is postulated to induce a small GRE in the dome. For this reason, ignition source controls (Set 2) shall be applied to the dome intrusive region for the duration of the waste

disturbing activities. In addition, continuous monitoring is required in the dome intrusive region during manned, waste disturbing activities. After completing the waste disturbing activity and verifying that flammable conditions do not exist, these controls can be removed.

Ignition source controls (Set 1) (Section E4.3.1) shall be applied to all waste intrusive or intruding equipment.

Ventilation controls (Section E4.2) shall be maintained in Facility Group 3 tanks to mitigate steady state gas accumulation. Finally, ignition source controls (Set 2) are applied to sealed risers and sealed pits, at all times that they are sealed.

E5.4 NONTANK WASTE TRANSFER SYSTEM COMPONENTS

Miscellaneous transfer system components (e.g., transfer lines, valve pits, diversion boxes, process pits, transfer line clean out boxes) that are not directly connected to the waste tank headspaces are judged to pose a low flammable gas deflagration risk. The potential for flammable gases in these transfer system components is limited to the gas accumulation from chronic generation and release from contained waste and corrosion. Risk is reduced by flushing transfer lines after use. Historical evidence exists that the risk posed by this hazard is low. In addition, gas concentrations are monitored during entry to all vapor spaces, such as process pits, that might be connected to transfer lines. Gas monitoring verifies the risk is low. Flushing practices are required to be continued to maintain a low risk of flammable gas generation and accumulation. It is judged that additional controls are not warranted at this time.

E5.5 DOUBLE-CONTAINED RECEIVER TANKS

DCRTs are used primarily as lag storage facilities for supernatant and interstitial liquids for SSTs that are being pumped to complete the interim stabilization process. Tank 241-TX-244 also receives waste transfer from the Plutonium Finishing Plant (PFP).

The DCRTs consist of a steel tank located in an underground concrete vault. Mechanical exhausters provide the ventilation flow through the vault and suction to the tank. The inlet flow from the vault to the tanks is provided through leak paths at instrument connections with the tank (except for 244-U, which has a filtered inlet path). Because DCRTs contain waste heels and remnants of contaminated flush water, continued dip tube air flow is provided in these tanks. Gas generation rates from the heels and for waste temporarily stored in the DCRT during typical transfer operations are generally low enough that ventilation flow rates of a few cubic feet per hour are judged adequate for continued operations.

Ventilation flow is provided by instrument air injected into the tank at an estimated 0.08 m^3/hr (3 ft^3/hr) as part of the waste level dip tube operation.

Table E5-1. Flammable Gas Facility Group Assignments.

Facility Group 1	Facility Group 2	Facility Group 3	NON-GRE
DSTs: AN-103, 104, 105 AW-101 SY-103	DSTs: AN-101, 102, 106, 107, AP-101, 102, 103, 104, 105, 106, 107, 108; AW-102, 103, 104, 105, 106, AY-101, 102; AZ-101, 102; SY-102. SSTs: A-101, 103; B-201, 202; BX-107; BY-101, 102, 105, 106; C-104; S-101, 102, 103, 105, 106, 107, 109, 111, 112; SX-101, 102, 103, 105, 106, 109[1]; T-201, 202, 204; TX-102, 111, 112, 113, 115; U-102, 103, 105, 106, 107, 108, 109, 111. IMUSTs: 216-BY-201, 216-TY-201, 240-S-302, 241-TX-302B, 241-TX-302B(R), 241-SX-302, 241-TX-302X, 241-AX-151, 241-A-302B, 241-B-301B, 241-S-302A, 241-T-301, 241-ER-311A, 243S-TK-1, 241-BX-302C, 242-T-135, 242-TA-R1, 241-C-301C, 241-B-302B, 244-BXR-003, 270-W, and 244-BXR-002	SSTs: A-102,[2]104, 105, 106; AX-101[2], 102, 103[2], 104; B-101, 102, 103, 104, 105, 106, 107, 108, 109, 110, 111, 112, 203, 204; BX-101, 102, 103, 104, 105, 106, 108, 109, 110, 111, 112; BY-103, 104, 107, 108, 109, 110, 111, 112; C-101, 102, 103, 105, 106, 107, 108, 109, 110, 111, 112, 201, 202, 203, 204; S-104,[2]108, 110; SX-104[2], 107, 108, 110, 111, 112, 113, 114, 115; T-101, 102, 103, 104, 105, 106, 107, 108, 109, 110, 111, 112, 203; TX-101, 103, 104, 105, 106, 107, 108, 109, 110, 114, 116, 117, 118; TY-101, 102, 103, 104, 105, 106; U-101, 104, 110, 112, 201, 202, 203, 204. 244-AR TK-002 244 CR TKs 001, 002, 003 IMUSTs: 241-TX-302A, 241-TY-302A, 244-TXR-002, 241-BX-302A, 241-BX-302B, 244-TXR-001, 244-BXR-011, 244-BXR-001, 244-TXR-003, 241-Z-8.	DCRTs: 244-A, 244-BX, 244-S, 244-TX, 244-U Catch Tanks: 241-S-304, 241-TX-302-C, 241-U-301-B, 241-UX-302-A, 241-A-302-A, 241-A-417, 241-AX-152, 241-AZ-151, 241-AZ-154, 241-ER-311, 241-EW-151, 204-AR-TK-1, 241-A-350 244-AR TKs 001, 003 and 004 Evaporators: 242-T TK-B1 and evaporator vessel, 244-CR TK-011 IMUSTs: 231-W-151-001, 231-W-151-002, 241-S-302B, 241-TY-302B.

Notes:

[1]Tank 241-SX-109 passes the GRE evaluation documented in WHC-SD-WM-ER-526. As such it would be placed in Facility Group 3. However, it is included in Facility Group 2 because a number of tanks in the SX farm are Facility Group 2 tanks and, because of the unique ventilation configuration of the SX Farm, these tanks vent through the headspace of Tank 241-SX-109.

[2]Three tanks (241-SX-104, 241-AX-101, and 241-AX-103), which are currently on the Flammable Gas Watch List, are placed into Facility Group 3. The inclusion of SSTs into this group is based on the results of the GRE evaluation in WHC-SD-WM-ER-526. The watch list status for tanks is based on different evaluation methodologies used in the past.

Ventilation rates will be established and verified adequate to maintain DCRT gas concentrations below 25% of the LFL before placing new waste types (that is, waste types that may generate flammable gases at a higher rate than those handled currently) in the receiver tanks. The methodology for assessing the adequacy of the ventilation provided to the DCRTs during waste transfers is described in HNF-SD-WM-CN-118, *Calculation of Flammable Gas Mixtures in Double-Contained Receiver Tanks*.

Because of the limited storage time and small amounts of solids stored in DCRT waste, DCRTs are judged not to have significant GRE potential and are not subject to waste intrusive, waste intruding, or GRE controls.

Table E5-2 lists the DCRTs and the JCO control requirements.

E5.6 244-AR VAULT LAG STORAGE TANKS

The 244-AR-Vault facility is an inactive canyon building that was used for waste transfers and lag storage enroute from the Plutonium Uranium Extraction (PUREX) Facility to B Plant and waste enroute from B Plant and the Waste Encapsulation Storage Facility to the tank farms. The facility was also used during waste sluicing/transfer operations from the A and AX Farms. The 244-AR vault has four storage tanks (TK-001, TK-002, TK-003, and TK-004).

Table E5-3 shows the best estimate of tank contents, gas sample results, required ventilation controls, and the Facility Grouping. TK-002 contains 87,000 L (23,000 gal) of radioactive waste, including 2,300 L (600 gal) of neutralized current acid waste sludge left from the sluicing/waste transfer operations in AX Farm. The remaining three tanks in this facility are believed to contain very dilute liquids from flushing operations. These liquids have been collected from facility sumps and, therefore, are primarily water which has little potential for gas generation.

When the facility was active, a vessel vent system (K4) controlled hydrogen buildup and provided confinement for the storage tanks. Because this system has been inactive for several years, ventilation flow is provided by dip tube air flow to all four tanks. TK-002 had the only nonzero flammable gas concentration measured, indicating a hydrogen concentration of 2,200 ppm or the equivalent of 5.5% of the LFL (0.222 %vol hydrogen). For this tank, 4.0 %vol hydrogen can be used for total flammable gas concentrations because the measured concentrations of methane and ammonia are less than 0.001 %vol. This concentration has resulted from operation of dip tube air purge of 0.08 m^3/hr. Based on these sampling results, continued operation of dip tube air is judged to be adequate to control flammable gases in TK-002 until the waste can be removed while TK-001, TK-003, and TK-004 are judged to be safe without dip tube air purging. The flammable gas-related ventilation controls for TK-002 maintain ventilation purge through two dip tubes.

TK-002 may contain a 2,300-L (600-gal) heel of sludge from Tank 241-AX-104 that may cause gas retention; therefore, waste intrusive and waste intruding regions apply. Because of the sludge heel, this tank is treated with Facility Group 3 controls to ensure that flammable gas controls mitigate the hazards posed by potential release of gas retained within the sludge during sludge disturbing operations.

Table E5-2. Double-Contained Receiver Tank Flammable Gas Control Information.

DCRT	Use	Ventilation Requirements	Facility Group	Installed Equipment Ignition Source Controls
244-A	Cross-site, B-plant and some evaporator feed transfers. Drainage from transfer lines.	Dip tube operating to vent gases generated by waste heel. Assess dip tube flow requirements before placing new waste types in tank.	Non-GRE	None[2]
244-BX	Lag storage of 241-B, 241-BX, and 241-BY Tank Farm salt well liquids. Currently contains a significant sludge heel.	Dip tube operating to vent gases generated by waste heel. Assess before placing new waste types in tank.	Non-GRE	None[2]
244-S	Lag storage of 241-S and 241-SX Tank Farm salt well liquids and miscellaneous plant wastes. Drainage from cross-site transfer line.	Dip tube operating to vent gases generated by waste heel. Assess dip tube flow before placing new waste types in tank.	Non-GRE	None[2]
244-TX	Lag storage of 241-T Tank Farm salt well liquids. Lag storage for PFP waste transfers.	Dip tube operating to vent gases generated by waste heel. Assess dip tube flow requirements prior to placing new waste types in tank.	Non-GRE	None[2]
244-U	Lag storage of 241-U Tank Farm salt well liquids. Drainage from 241-SY Tank Farm transfer lines.	Tank/vault ventilation provided during lag storage of wastes.	Non-GRE	None[2]

Notes:

[1] DCRTs have been judged to pose little risk from GREs and therefore no GRE related controls are required.

[2] Flammable gas hazards are limited to steady state accumulation which is controlled by required ventilation; therefore, ignition source controls are not applied to installed equipment.

Table E5-3. 244-AR Storage Tank Flammable Gas Control Information.

Tank 244-AR	Contents	Gas Sample Results[1]	Ventilation Control Requirements	Facility Group	Installed Equipment Ignition Source Controls
TK-001	9100 L (2,400 gal) of mostly water from flushing and sump collection.	0% of LFL	None	Non-GRE	None
TK-002	2300 L (600 gal) of Tank 241-AX-104 sludge and 84,800 L (22,400 gal) of mainly water from flushing and sump collections.	5.4% of LFL	Continued dip tube air flow	Group 3	IC Set 2 during waste disturbing operations
TK-003	7600 L (2,000 gal) of mainly water from flushing operations and sump collections.	0% of LFL	none	Non-GRE	None
TK-004	380 L (100 gal) of mainly water from flushing of Tank 241-AX-104 sludge to TK-002.	0% of LFL	none	Non-GRE	None

Notes:

[1]Goheen (1996), *Analysis of the Samples from Four Catch Tanks.*

E5.7 INACTIVE MISCELLANEOUS UNDERGROUND STORAGE TANKS

The TWRS is responsible for managing 36 IMUSTs (WHC-SD-WM-PD-046, *Tank Waste Remediation System Inactive, Miscellaneous Underground Storage Tanks Program Plan*) that were physically isolated for at least 10 years. Knowledge about the contents of these tanks ranges from adequate to unknown, but they are all suspected to contain radioactive waste. Because many IMUSTs contain waste similar in composition to SST waste, it is postulated that flammable gas behavior (gas generation, retention, and release) is analogous to that in SSTs, but on a much smaller scale because of the small amount of waste present.

Because of the inactive and sealed condition of the IMUSTs, even slow gas generation rates can create potentially hazardous flammable gas accumulation over a long period. The gas generation rates, seal quality, and possible passive ventilation rates provided to the IMUSTs is unknown. For these reasons, this JCO imposes flammable gas ignition source and work activity monitoring controls required by the Facility Group control set assigned in Table E5-4.

The IMUSTs were evaluated for flammable gas generation and accumulation rate (WHC-EP-0861, *Status Report for IMUSTs at Hanford Site 200 Areas*) to obtain estimates of gas generation based on the radiolysis of water given the best available information regarding ^{137}Cs and ^{90}Sr inventories and the assumption of a completely sealed tank. Based on this estimate, the IMUSTs were assigned a flammable gas relative hazard ranking as defined in Table E5-4. These rankings are for information purposes and are not used to establish JCO flammable gas control requirements. Actual gas samples taken from three IMUSTs (241-C-301C, 241-TY-302A, 241-TY-302B) have indicated flammable gas concentrations of less than 1% of the LFL.

The Facility Group control sets were assigned based on the amount of waste solids and overlying supernatant known or suspected to be contained in the tank. The IMUSTs with significant solids but little supernatant (either less than 378.5 L [100 gal] or less than 1% of the tank capacity) were assigned to Facility Group 3. Conversely, IMUSTs with significant solids and a large supernatant layer were assigned to Facility Group 2. If the waste solid and liquid volumes of an IMUST were unknown, the tank was assigned to Facility Group 2 as a prudent measure until better knowledge of the waste contents is obtained. A group 2 assignment is judged to be conservative because the IMUSTs generally have been interim stabilized by removing as much liquid as technically and economically practical. Because a significant supernatant is unlikely to exist in these tanks, a spontaneous GRE is judged to be very unlikely. Finally, those IMUSTs containing mostly liquids with only a small amount of solids (less than 378.5 L [100 gal]) are judged not to warrant GRE controls.

The IMUSTs generally do not have energized equipment, so the potential for ignition sources is judged to be very low. Liquid levels are monitored in four tanks: Tanks 241-A-302B and 241-TX-302B are monitored for liquid level using a manual tape and Tanks 240-S-302 and 241-S-302A are monitored with FIC level detectors in the intrusion mode. These level measurement systems meet ignition source controls (Set 2) requirements.

Table E5-4. Tank Waste Remediation System Inactive Miscellaneous Underground Storage Tank Flammable Gas Control Information. (4 sheets)

Facility	Capacity (gal)	Inventory		Relative Flammable Gas Accumulation Hazard (Sample Results if Available, % LFL)	Facility Group
		Material	Volume (gal)		
216-BY-201	no data	no data	no data	---	Group 2
216-TY-201	no data	no data	no data	---	Group 2
231-W-151-001	4,000	floor drainage from 231-Z	Solids: 0 Supernatant: 1,430 Total waste: 1,430	Low	non-GRE
231-W-151-002	1,000	floor drainage from 231-Z	Solids: 12 Supernatant: 955 Total waste: 967	Low	non-GRE
240-S-302	17,684	HLW[2]	Total waste: 2,276	Low	Group 2
241-A-302B	13,500	HLW	Total waste: 3,600	Low	Group 2
241-AX-151	11,000	no data	no data	---	Group 2
241-B-301B	36,000	HLW	Solids: 21,660 Supernatant: 590 Total waste: 22,250	Low	Group 2
241-B-302B	17,684	HLW	Solids: 690 Supernatant: 4,240 Total waste: 4,930	Low	Group 2
241-BX-302A	17,684	HLW	Solids: 835 Supernatant: 0 Total waste: 835	Low	Group 3
241-BX-302B	11,389	HLW	Solids: 950 Supernatant: 94 Total waste: 1,044	Low	Group 3
241-BX-302C	11,378	HLW	Solids: 635 Supernatant: 228 Total waste: 863	Low	Group 2

Table E5-4. Tank Waste Remediation System Inactive Miscellaneous Underground Storage Tank Flammable Gas Control Information. (4 sheets)

Facility	Capacity (gal)	Inventory		Relative Flammable Gas Accumulation Hazard (Sample Results if Available, % LFL)	Facility Group
		Material	Volume (gal)		
241-C-301C	36,000	HLW	Solids: 9,016 Supernatant: 1,470 Total waste: 10,486	Low (< 0.06% LFL)	Group 2
241-ER-311A	no data	no data	no data	-	Group 2
241-S-302A	17,684	HLW	Total waste: 5,130	Low	Group 2
241-S-302B	14,314	Tank considered empty	probably empty	Low	non-GRE
241-SX-302	17,684	HLW	Solids: 1,050 Supernatant: 305 Total waste: 1,355	Low	Group 2
241-T-301	36,000	HLW	Solids: 21,658 Supernatant: 588 Total waste: 22,246	Low	Group 2
241-TX-302A	17,684	HLW	Solids: 2,450 Supernatant: 30 Total waste: 2,480	Low	Group 3
241-TX-302B	17,684	HLW	Total waste: 1,320	Low	Group 2
241-TX-302B (R)	12,000	HLW	no data	-	Group 2
241-TX-302X	14,314	HLW	Solids: 108 Supernatant: 245 Total waste: 353	Low	Group 2
241-TY-302A	17,684	HLW	Solids: 450 Supernatant: 0 Total waste: 450	Low (<0.01% of LFL[3])	Group 3

Table E5-4. Tank Waste Remediation System Inactive Miscellaneous Underground Storage Tank Flammable Gas Control Information. (4 sheets)

Facility	Capacity (gal)	Inventory		Relative Flammable Gas Accumulation Hazard (Sample Results if Available, % LFL)	Facility Group
		Material	Volume (gal)		
241-TY-302B	14,314	Tank is empty	Tank is empty	none (<0.01% of LFL[4])	non-GRE
241-Z-8	15,435	Backflush of feed filters for the RECUPLEX process	Solids: 500 Supernatant: 0 Total waste: 500	Low	Group 3
242-T-135	no data	no data	no data	---	Group 2
242-TA-R1	4,200	no data	no data	---	Group 2
243S-TK-1	550	no data	no data	---	Group 2
244-BXR-001	50,000	Metal waste slurry from BX and BY tanks	Solids: 7,215 Supernatant: 0 Total waste: 7,215	High	Group 3
244-BXR-002	15,000	Metal waste slurry from BXR-001 mixed with nitric acid	Solids: 1,805 Supernatant: 380 Total waste: 2,185	Low	Group 2
244-BXR-003	15,000	Metal waste slurry from BXR-001 mixed with nitric acid	Solids: 1,449 Supernatant: 356 Total waste: 1,805	High	Group 2
244-BXR-011	50,000	Metal waste slurry and nitric acid from BXR-002 & BXR-003	Solids: 7,020 Supernatant: 98 Total waste: 7,118	High	Group 3
244-TXR-001	50,000	Bismuth phosphate metal waste from T and TX tanks	Solids: 2,291 Supernatant: 49 Total waste: 2,340	Low	Group 3
244-TXR-002	15,000	Waste slurry from TXR-001 mixed with nitric acid	Solids: 2,945 Supernatant: 0 Total waste: 2,945	Low	Group 3

Table E5-4. Tank Waste Remediation System Inactive Miscellaneous Underground Storage Tank Flammable Gas Control Information. (4 sheets)

Facility	Capacity (gal)	Inventory		Relative Flammable Gas Accumulation Hazard (Sample Results If Available, % LFL)	Facility Group
		Material	Volume (gal)		
244-TXR-003	15,000	Waste slurry from TXR-001 mixed with nitric acid	Solids: 6,460 Supernatant: 0 Total waste: 6,460	Low	Group 3
270-W	3,780	Neutralized process condensate from 224-U	no data	---	Group 2

Notes:

[1]The criteria for determining the priority rank of high, moderate, or low with regard to hydrogen generation and buildup as a potential safety issue are as follows.
High: Hydrogen accumulation reaches more than 1 %vol of the tank headspace (25 percent of the LFL) in 10 years or less.
Moderate: Hydrogen accumulation reaches more than 1 %vol of the tank headspace in 10 to 25 years.
Low: A tank is empty or hydrogen accumulation reaches more than 1 %vol percent of the headspace in more than 25 years.
If there are no data to calculate hydrogen generation, and there is less than a 50 percent void space ratio, the tank is ranked moderate.
If there are no data to calculate hydrogen generation, and there is greater than or equal to a 50 percent void space ratio, the tank is ranked low.

[2]HLW indicates waste contents could be any or a mixture of a number of typical High Level Wastes (HLW) similar to those found in the SSTs. More details are contained in WHC-EP-0861, 1995, Status Report for Inactive Miscellaneous Underground Storage Tanks at Hanford Site 200 Areas, Rev. 0, Westinghouse Hanford Company, Richland, Washington.

[3]Goheen (1995a, Gas Sample Analysis from Tank 302-A)

[4]Goheen (1995b, Gas Sample Analysis from Tank 302-B)

E5.8 CATCH TANKS

Catch tanks are underground storage tanks used to collect drainage of waste from diversion boxes, valve pits, and other waste transfer system equipment. Although newer catch tanks are contained within concrete vaults that provide secondary containment, older catch tanks are buried directly in the ground. Generally, catch tanks are located below pits that contain pumps and leak detection equipment.

The ventilation provided to each catch tank is unknown and may vary due to differing designs. Ventilation may be provided by tie-ins to tank ventilation systems, passive ventilation through breather filters, and/or passive ventilation through cracks in tank connections and pit cover blocks. Exact ventilation performance in each catch tank is difficult to quantify because of a lack of instrumentation. Furthermore, these tanks use manual tape, FIC, or ENRAF level measuring devices rather than dip tubes so purge air is not provided to the catch tanks. Therefore, this JCO must assume that adequate ventilation has not been verified.

Because of the small amounts of waste solids stored in the catch tanks, waste intrusive and waste intruding regions do not apply. Small induced GREs are not postulated for these tanks. The flammable gas hazard is thus limited to steady state release and accumulation. Because a steady state hazard exists if waste heels or contaminated flushwater remnants are present, unless adequate ventilation is verified, including gas sampling, the control strategy for catch tanks in this JCO is to verify that equipment in the vapor spaces connected to the catch tanks meets the requirements of ignition source controls (Set 2) (Section E4.3.2). Additionally, catch tanks shall be verified to be less than 25% of the LFL during work activities using standard work entry controls. Ignition source controls for manned work activities are applied only during work entry until flammable gas concentrations are verified to be less than 25% of the LFL.

Tank 241-A-350 differs from other DCRTs or catch tanks. It is used as a catch tank as it receives drainage from the 241-A Tank Farm in the event of a waste transfer leak.

Tank 241-A-350 is also used for lag storage during the transfer of evaporator condensate from 207-A to Tank 241-AW-102. This condensate is very dilute in radionuclides and is not a significant gas generation source; therefore, active ventilation, such as a required dip tube air supply, is judged to not be required for this lag storage operation.

Tank 241-A-350 is treated as a catch tank in terms of JCO flammable gas controls.

Table E5-5 lists the catch tanks addressed in this JCO and the flammable gas control requirements.

E5.9 242-S AND 242-T EVAPORATORS

E5.9.1 242-S Evaporator

The 242-S Evaporator facility was placed in a shutdown/standby condition in 1985, as documented in WHC-SD-WM-SSP-002, *242-S Facility Shutdown/Standby Plan*. The facility was flushed and radioactive liquids were removed. The aqueous makeup tanks, feed and slurry lines, acid addition lines, Tank 241-C-100 and evaporator vessel CA1 were flushed with water, along with having the lines blanked.

A facility walkdown was done in accordance with the WHC-SD-WM-FHA-022, *Fire Hazards Analysis for the 242-S Evaporator*. No reservoirs were found containing solely flammable or combustible liquids in excess of 3.7 L (1 gal) in the process areas.

Because this facility is inactive, additional flammable gas controls beyond those required for normal industrial hazards are not needed.

E5.9.2 242-T Evaporator

Operations in the process areas of 242-T Evaporator were discontinued in November of 1980. SD-HS-SAR-009, *242-T Evaporator Facility Shutdown/Standby to Condition V Safety Analysis Report*, was issued to maintain the facility process areas in a safe shutdown mode until decommissioning work could be initiated.

Facility records indicate that drain and transfer lines from the facility have been cut and capped, isolating the facility from SSTs, DSTs, and DCRTs, but the records do not describe flushing or waste removal from the process tanks. Hydrogen can arise from the corrosion of iron as well as the radiolytic degradation of water and organics such as tributyl phosphate. However, hydrogen generation in aqueous solutions low in fission products, such as PFP waste is expected to be slow. Because PFP waste was the last waste handled in the process tanks and the evaporator tanks are passively ventilated, flammable gas concentrations are expected to be low.

Because of uncertainties about the amount of remaining residual waste, it is prudent for this JCO to impose flammable gas ignition source and work activity monitoring controls for the blend tank (TK-B1) and the evaporator vessel in 242-T. Until gas sampling is performed to verify that flammable gases are not accumulating, equipment installed in these tanks must meet ignition control (Set 2) requirements or be deenergized. Entry monitoring must be performed before performing work activities. These controls are justified based on the type of waste and the manner in which it was processed through these tanks.

Table E5-5. Catch Tank Flammable Gas Control Information. (2 sheets)

Catch Tank	Use	Manual Work Activity Controls	Ventilation and Installed Equipment Requirements
241-S-304	Drainage from Diversion Box DB-241-S-151, precipitation and run-off	IC Set 2 until entry monitoring is completed	Verify adequate ventilation or meet IC Set 2
241-TX-302-B	Drainage from DB-241-TX-155, precipitation and run-off	IC Set 2 until entry monitoring is completed	Verify adequate ventilation or meet IC Set 2
241-TX-302-C	Drainage from DB-241-TX-154, precipitation and run-off	IC Set 2 until entry monitoring is completed	Verify adequate ventilation or meet IC Set 2
241-U-301-B	Drainage from DB-241-U-151, DB-241-U-152, DB-241-U-153 and DB-241-U-252	IC Set 2 until entry monitoring is completed	Verify adequate ventilation or meet IC Set 2
241-UX-302-A	Drainage from DB-241-UX-154, 291-U stack, precipitation and run-off	IC Set 2 until entry monitoring is completed	Verify adequate ventilation or meet IC Set 2
241-A-302-A	Drainage from DB-241-A-151	IC Set 2 until entry monitoring is completed	Verify adequate ventilation or meet IC Set 2
241-A-417	Drainage from 241-AY/AZ ventilation condensate system and possibly steam condensate from 241-AX-501 valve pit and 241-AZ-154	IC Set 2 until entry monitoring is completed	Verify adequate ventilation or meet IC Set 2
241-AX-152	Drainage from 241-AX-152 diverter station, DB-241-AX-155, AY-501 and 702-A seal pot	IC Set 2 until entry monitoring is completed	Verify adequate ventilation or meet IC Set 2
241-AZ-151	Drainage from DB-241-AZ-152, AZ ventilation seal loops, leak detection pits, 801-AZ Instrument Building, precipitation and run-off	IC Set 2 until entry monitoring is completed	Verify adequate ventilation or meet IC Set 2

Table E5-5. Catch Tank Flammable Gas Control Information. (2 sheets)

Catch Tank	Use	Manual Work Activity Controls	Ventilation and Installed Equipment Requirements
241-AZ-154	Condensate from Tank 241-AZ-101, 102 steam coils, precipitation and run-off	IC Set 2 until entry monitoring is completed	Verify adequate ventilation or meet IC Set 2
241-ER-311	Drainage from DB-241-ER-151 and DB-241-ER-152	IC Set 2 until entry monitoring is completed	Verify adequate ventilation or meet IC Set 2
241-EW-151	Vent station for cross-site transfers	IC Set 2 until entry monitoring is completed	Verify adequate ventilation or meet IC Set 2
204-AR-TK-1	204-AR Waste Unloading Facility catch tank	IC Set 2 until entry monitoring is completed	Verify adequate ventilation or meet IC Set 2
241-A-350	Received drainage from 241-A Tank Farm. Lag storage of condensate transfers from 207-A Retention Basin to Tank 241-AW-102	IC Set 2 until entry monitoring is completed	Verify adequate ventilation or meet IC Set 2 when waste is present. No requirements during transfer/lag storage of condensate.

E5.10 244-CR VAULT LAG STORAGE TANKS

The 244-CR-Vault facility is an inactive facility that functioned as a lag storage and transfer station for various waste streams including liquid discharge from Hot Semiworks and fission product "crudes" being transported between PUREX and B Plant. Until 1973, 244-CR Vault served as an interface facility providing lag storage and transfer service for PUREX acidified sludge (PAS) in transit from the 244-AR Vault to B Plant. The facility has also been used for routing waste transfers from 241-C Tank system to the DST system. The 244-CR Vault is a reinforced structure that houses two 40,000 gallon tanks (TK-CR-001 and TK-CR-011) and two 15,000 gallon tanks (TK-CR-002 and TK-CR-003).

Table E5-6 presents a summarization of the best estimate of the tank contents, volumes, required ventilation controls, and applicable Facility Grouping. TK-CR-001 was last used during the uranium recovery program in the 1950's. It contains a residual heel, less than 7,600 L (2,000 gal). TK-CR-002 contains less than 5,700 L (1,500 gal) of radioactive waste, consisting primarily of PAS transferred from Tank 244-AR-001 to B Plant for strontium recovery. TK-CR-003 was last used in 1995 during the SST stabilization campaign for Tank 241-C-102, Tank 241-C-107, and Tank 241-C-110. Those waste streams have since been removed from TK-CR-003. The current waste volume in TK-CR-003 is approximately 15,000 L (4,000 gal). This remaining heel in TK-CR-003 consists of PAS and Hot Semiworks waste. In the 1970's, TK-CR-011 was used as the sump receiver for 244-CR-Vault and for Hot Semiworks. Small rainwater accumulations were jetted from the other three 244-CR-Vault sumps and from Tank 69 at Hot Semiworks. As of 1986, TK-CR-011 contained approximately 133,000 L (35,000 gal) of liquid. The bulk of this inventory is approximately 21,000 gal of Tank 241-CX-70 supernatant liquid transferred to TK-CR-011 in 1979; and the remaining inventory is rainwater from Hot Semiworks and 244-CR-Vault sump drainage.

The 244-CR-Vault ventilation consists of a gravity or ambient air supply with air directed and controlled through the vault by operation of the 291-CR ventilation, air filtration, and exhaust system. The 244-CR Vault is divided into an upper and lower section. The upper section is considered the pump pit and riser pit areas, and the lower vault section houses the primary tanks which are separated from the vault by annular spaces. The upper and lower vault sections are connected by exhaust ports allowing air flow between the two sections. Air is removed from the lower vault section at the floor level and routed into a filter plenum. The air is then treated by a double bank of HEPA filters prior to being exhausted to the atmosphere through the stack. However, there is no separate vessel ventilation system for the tanks themselves. Exhaust air from the tanks enters the lower and upper vault sections via floor drains and exhaust ports; and is then swept away by the vault ventilation system air flow.

There are no ventilation flow instruments for the tanks themselves. In addition, no gas monitoring has been performed for these tanks to determine if the ventilation provided to these tanks by the vault ventilation system is adequate to maintain the flammable gas concentrations within acceptable levels

(i.e., less than 25% of the LFL). Until adequate ventilation is verified, and controls for maintaining it operable are implemented, equipment located in the headspace of these tanks must meet ignition source controls (Set 2) or be deenergized.

Gas sampling of Tanks TK-CR-001, 002 and 011 is impractical in the near term as riser access has been eliminated as part of the intrusion prevention effort (i.e., the risers have been foamed over). Tank modifications are planned for the future to re-establish access as part of the facility clean out process. Because TK-CR-003 is desired to be maintained in an active status (for the possible use of providing lag storage of pumped liquids during the salt well pumping of Tank 241-C-103), and gas sampling is more practical (tank access is available via the manual tape access riser) the adequacy of the ventilation provided to TK-CR-003 will be verified by obtaining gas samples of the TK-CR-003 vapor space. Air purging will be provided in this facility if sample results indicate concentrations $\geq$ 25% LFL. With adequate ventilation being provided, ignition source controls can be removed (during non-waste disturbing operations). LCO 3.2.4 requires the operability of the ventilation to Tank TK-CR-003 (HNF-SD-WM-TSR-006). In addition, AC 5.11.2.d requires that the ventilation flow be verified to be adequate for new waste types prior to placing new waste types in this tank (HNF-SD-WM-TSR-006).

Due to the remaining sludge heels in Tanks TK-CR-001, -002 and -003, these tanks are categorized as Facility Group 3. This conservative categorization ensures that the potential hazard of releasing gases that may be retained by the waste solids is adequately considered during waste disturbing operations (e.g., sludge heel removal). The supernate contained in TK-CR-011 is judged to have no significant gas retention potential and therefore this tank is categorized as non-GRE and is not subject to waste intrusive, waste intruding, or GRE controls as identified in this JCO.

Table E5-6. 244-CR Vault Storage Tank Flammable Gas Control Information.

244-CR Vault	Contents	Ventilation Control Requirements	Facility Group	Installed Equipment Ignition Source Controls
TK-CR-001	Less than 7,600 L (2,000 gal) of waste from Uranium Recovery Program (mostly waste solids)	None[1]	Facility Group 3	IC set 2 or deenergize
TK-CR-002	Less than 5,700 L (1,500 gal) of radioactive waste consisting primarily of PAS (mostly waste solids)	None[1]	Facility Group 3	IC Set 2 or deenergize
TK-CR-003	15,000 L (4,000 gal) of PAS and Hot Semiworks discharge (mostly waste solids)	Verify vault ventilation system is adequate via gas sampling or purging if necessary. Assess ventilation flow requirements prior to placing new waste in tank	Facility Group 3	None during non-waste disturbing operations IC Set 2 during waste disturbing operations
TK-CR-011	133,000 L (35,000 gal) of supernate and rainwater from Tank 241-CX-70, Hot Semiworks, and 244-CR Vault sumps	None[1]	Non-GRE	IC Set 2 or deenergize

[1] Although ventilation may be provided to this tank by the vault ventilation system, verification of its adequacy is not practical at this time. Until adequacy can be established by gas sampling, no ventilation requirements can be implemented. Until adequate ventilation is verified and a requirement (e.g., TSR) implemented, installed equipment must meet IC Set 2 or be deenergized.

This page intentionally left blank.

E6.0 JUSTIFICATION FOR CONTINUED OPERATIONS AND RESIDUAL RISK FROM CONDITIONS, OPERATIONS, AND ACTIVITIES IN FACILITIES INVOLVING THE FLAMMABLE GAS USQ

E6.1 EFFECTIVENESS OF CONTROLS FOR MANAGING THE RISK POSED BY FLAMMABLE GASES

The control strategy for flammable gas includes ventilation, ignition sources, and monitoring. Ventilation controls limit the risk of flammable gas accumulation by removing continuously evolved gases (steady state) and diluting gas release events. Monitoring flammable gas levels validates ventilation effectiveness and provides a basis for managing the risks posed by tank intrusive activities. If flammable gas concentration exceeds the LFL, control of ignition sources introduced into intrusive environments limits the risk of igniting flammable gas mixtures.

E6.1.1 Effectiveness of Ventilation

E6.1.1.1 Control of Flammable Gases Released in a Steady State Manner. For purposes of this JCO, all available tank headspace data are judged to imply that current ventilation procedures are generally effective in managing the risk of steady state flammable gas accumulation in waste storage tanks. Measurements for 77% of the SSTs, which were taken as part of vapor space characterization and flammable gas monitoring, indicate that concentrations are well below flammable levels. For this reason, this JCO continues current practices related to tank ventilation. The longer term effort to upgrade the Authorization Basis with respect to management of flammable gas hazards will benefit from additional vapor space sampling and quantitative bases for ventilation performance requirements.

The DCRT ventilation provided by the vault ventilation system is not verified as adequate. Therefore, DCRTs are required to be purged with instrument air. The adequacy of instrument air purge will be verified before placing new waste types in DCRTs. 244-CR TK 003, which does not have instrument air purge, must be sampled to verify that the vault ventilation system is adequate.

Instrument air purge of Tank 244-AR TK-002 is required and has been verified as adequate. Tanks TK-001, TK-003, and TK-004 have been sampled for flammable gas concentration and do not require air purges.

E6.1.1.2 Gas Release Events. The ventilation rate through the tank has little effect on the peak concentration after a GRE. Because the headspaces are generally quite large in SSTs and DSTs (850 to 2,830 m^3 [30,000 to 100,000 ft^3]) compared to active ventilation rates (typically 0.85 to 5.7 m^3/min [30 to 200 ft^3/min]), the ventilation effects on the concentrations in the tank headspace after a GRE are not dramatic. For releases that can cause concentrations that significantly exceed the LFL in a well mixed headspace, the time at risk could easily exceed several hours, even with high ventilation rates (WHC-SD-WM-SAD-034, *A Safety Assessment for Salt Well Pump Operations in Tank 241-A-101: Hanford Site, Richland, Washington*).

Ventilation controls cannot guarantee concentrations will be maintained below the LFL during GREs although concentrations above the LFL have not been measured except during a few GREs in Tank 241-SY-101. Ventilation system modifications and controls (tank vacuum levels, flow rates, mixing effects) directly aimed at reducing risk from GREs are not included as part of this JCO. Refinements to ventilation controls are being developed as part of the Final Safety Analysis Report/Technical Safety Requirement effort.

For GRE events, deflagration and combustion are prevented by controlling ignition sources through equipment design and by properly monitoring headspace concentrations during work activities. The controls described in this JCO provide these defensive measures.

E6.1.2 Effectiveness of Ignition Source Controls

If flammable gas concentrations accumulate above the LFL, the primary defense against the flammable gas hazard is the control of ignition sources. Although such controls cannot eliminate all possible ignition sources, the selected controls meet the intent of industry standards and allow continued tank farm operations and prudent use of TWRS resources.

Ignition source controls, as presented in Section E4.3, include the following: modifications to installed electrical equipment, control of electrostatic sparks, use of spark-resistant materials for tools and equipment, use of nonsparking or intrinsically safe or purged equipment.

E6.1.2.1 Installed Electrical Equipment. Most electrical equipment installed in tanks and in connected headspaces existed before the flammable gas USQ determinations. Although the majority of equipment is considered adequate, some electrical equipment must be replaced or modified to manage the risk from flammable gases and allow important waste management functions to continue.

E6.1.2.2 Control of Electrostatic Sparks. Electrically conductive objects are bonded in accordance with NFPA 77 during intrusive work. Exceptions are listed in Section E4.3, "Ignition Source Controls"; justifications are described in Appendix E. In most situations where verbatim compliance is not practical, work activity monitoring provides confidence that an electrostatic spark situation will not exist if flammable conditions exist.

The differences of potential between risers or other earth grounds may vary, typically by a fraction of a volt and at relatively high impedances. *Intrinsically Safe Apparatus for Use in Hazardous Locations* (UL 1988) provides information about ignition curves for hydrogen that show that, in the most conservative applications, nothing less than 12 volts could generate enough energy on faulting to ignite hydrogen. Therefore, riser ground loops are considered intrinsically safe.

E6.1.2.3 Spark Resistant Materials. Spark resistant materials are used in tools and some equipment in an intrusive manner to reduce the likelihood of mechanical "impact sparks" and "thermite reactions." The use of such materials is not practical in all applications, such as existing thermocouple trees, auger guide tubes, and core drill strings. The use of nonspark resistant materials is justified if they are nonsparking during normal use or

if measures are taken to reduce the likelihood of creating mechanical sparks when and where flammable conditions might exist. Mechanical spark control measures can include the following: restraints to prevent dropping equipment, slow insertion and removal rates through risers, riser sleeves made of spark resistant materials, and wetting down of risers during equipment insertion and removal. Such measures are included in work packages and procedures if they are relied upon to establish ignition source control equivalencies or to utilize ignition source control exception (Table E4-3, Item 27).

E6.1.3 Effectiveness of Monitoring Controls

Flammable gas monitoring is the third aspect of the flammable gas control strategy. Before and during intrusive work, the headspace is monitored for flammable gases in the environment where flammable gas might exist and the work, or possible ignition sources, are located. Under all circumstances, manned work shall immediately halt if flammable gas concentrations exceed 25% of the LFL.

Monitoring may be conducted using continuous monitoring with alarmed CGM, SHMS, or installed combustible gas monitors. Although a requirement for two redundant continuous monitors was considered, this was not judged to be warranted at present because the JCO provides ignition source controls as the primary defense against deflagrations. Monitoring is used as an additional control feature when manned work activities are in progress and errant ignition sources are more likely. It is not considered prudent to continue manned work if 25% of the LFL has been exceeded even though equipment ignition source control requirements are met. Installed, qualified equipment may be allowed to operate (not be deenergized) if concentrations are above 25% of the LFL.

Periodic monitoring during unmanned, global waste disturbing operations, such as salt well pumping, in passively ventilated SSTs is prudent. According to JCO logic, safety is maintained independent of this monitoring by using equipment that is acceptable in a flammable environment. Acceptable equipment meets ignition source control Set 2. Ongoing, but periodic, monitoring as specified in the JCO will be required as a prudent additional measure in passively ventilated tanks during global waste-disturbing operations. Continuous monitoring for this function is judged to not be warranted.

E6.2 UNCERTAINTIES AND RESIDUAL RISK

E6.2.1 Tank Flammable Gas Categorization and Grading of Controls

The sorting of TWRS-managed tanks into four Facility Groups enables consistent application of control sets for similarly situated tanks and provides a practical degree of consistency in controls. This method also permits the relaxation of controls to the maximum extent possible given the existing uncertainties in tank conditions and tank flammable gas hazards phenomena.

Although the methodology used to estimate gas release volumes has weaknesses, it is the only methodology currently available and will continue to be used cautiously until a better methodology is developed. Errors associated with underlying assumptions and calculations tend to be conservative and do not negatively impact safety. The use of the methodology in this JCO is limited to distinguishing Facility Group 2 and Facility Group 3 SSTs.

The risks associated with relaxing the controls for DCRTs, IMUSTs, catch tanks, and other facilities that contain only small amounts of waste solids are judged to be low. Because these ancillary tanks contain very little waste solids, they are not postulated to retain flammable gases in the waste matrix. Should a particular tank in this group subsequently be shown to contain a substantial quantity of waste solids, Facility Group 3 controls are applied to that particular tank.

E6.2.2 Risk From Natural Phenomena

The risks of a flammable gas deflagration resulting from natural phenomena, such as lightning and seismic events, are being investigated as part of the TWRS Final Safety Analysis Report upgrade effort.

E6.2.2.1 Lightning. The lightning hazard was addressed recently in WHC-SD-WM-ES-387, *Probability, Consequences and Mitigation for Lightning Strikes to Hanford Site High-Level Waste Tanks.* This analysis determined that demonstrating quantitatively that an unacceptable lightning-caused combustion (organic-nitrate, organic solvent, flammable gas) event is not credible is impossible at this time. The lightning strike probability evaluation indicates the possibility of a strike in the tank farms during the rest of the waste storage mission. The qualitative factors that are known, however, support the conclusion that the likelihood of igniting the waste is low. However, because of the uncertainty associated with this analysis, it has been concluded that providing additional mitigation for the tank farms is appropriate. Installation of lightning arresters on existing poles in the tank farms and improving grounding of tank risers that have high riser-to-ground resistance measurements are planned. These measures are expected to reduce risk from lightning ignition of flammable gases and are an acceptable basis for continued operation.

E6.2.2.2 Seismic Events. The risk of seismic events is uncertain. A concern is for a common cause scenario where the seismic event induces a GRE while causing a spark within the headspace. Currently, no near-term controls for such a scenario have been identified. The benefits of possible mitigation actions for such a scenario need to be evaluated and weighed against the penalties. The penalties include possible loss of tank monitoring, waste management capability such as interim stabilization and transfer capability, before implementation.

7.0 REFERENCES

Bates, J. M., 1996, Letter, *Transmittal of Letter Report "Preliminary Retained Gas Sampler Results for Tank 241-AW-101"*, Pacific Northwest National Laboratory, Richland, Washington.

Caldwell, C. L., 1997, *Justification for Dual Survey Exemption in 200 East Tank Farms* (Interoffice Memo 771EO-97-006 to W. E. Ross, March 12), Lockheed Martin Hanford Corporation, Richland, Washington.

CRC Handbook of Chemistry and Physics, 68th Edition, R. C. Weast et al, 1987.

Dossett, S. D., 1997, *Justification for Dual Survey Exemption in 200 West Tank Farms* (Interoffice Memo 77B50-97-008 to J. Burton, March 17), Lockheed Martin Hanford Corporation, Richland, Washington.

Dougherty, H. F., 1990, *Activity Plans for DST/SST*, Letter 90014788 RL to R. E. Gerton, April 5, 1990, U.S. Department of Energy, Richland Operations Office, Richland, Washington.

Ermold, L. F., 1996, *Actions in Response to Spark Reported During Work on Tank 241-U-109*, (internal memo 9650352 to S. Burnam), Westinghouse Hanford Company, Richland, Washington.

Goheen, M. W., 1995a, *Gas Sample Analysis from Tank TY-302-A*, memo to W. B. Barton, Westinghouse Hanford Company, December 22, 1995, Pacific Northwest Laboratory, Richland, Washington.

Goheen, M. W., 1995b, *Gas Sample Analysis from Tank TY-302-B*, memo to W. B. Barton, Westinghouse Hanford Company, December 21, 1995, Pacific Northwest Laboratory, Richland, Washington.

Goheen, M. W., 1996, *Analysis of the Samples from Four Catch Tanks*, memo to M. T. Hughey, Westinghouse Hanford Company, March 1, 1996, Pacific Northwest National Laboratory, Richland, Washington.

HNF-IP-0842, 1998, *TWRS Administration*, Lockheed Martin Hanford Corporation, Richland, Washington.

HNF-SD-WM-ANAL-056, 1997, *Removal of Flammable Gas From Pits*, Rev. 0, Lockheed Martin Hanford Corporation, Richland, Washington.

HNF-SD-WM-CN-116, 1997, *Calculation Note: Hydrogen Generation Rates at Steady-State Flammable Gas Concentrations for Single Shell Tanks*, Revision 0-A, Lockheed Martin Hanford Corporation, Richland, Washington.

HNF-SD-WM-CN-117, 1997, *Calculation Note: Calculation of Hydrogen Release Rate at Steady-State for Double Shell Tanks*, Revision 0-A, Lockheed Martin Hanford Corporation, Richland, Washington.

HNF-SD-WM-CN-118, 1997, *Calculation of Flammable Gas Mixtures in Double-Contained Receiver Tanks*, Revision 0, Lockheed Martin Hanford Corporation, Richland, Washington.

HNF-SD-WM-HC-017, 1997, *Electrical Classification Study for the Flammable Gas Watch List Tanks*, Rev. 1, Westinghouse Hanford Company, Richland, Washington.

HNF-SD-WM-IMP-003, 1997, *Flammable Gas/Slurry Growth Unreviewed Safety Question: Justification for Continued Operation Compliance Plan*, Rev. 1, DE&S Hanford, Inc., Richland, Washington.

HNF-SD-WM-TI-797, 1997, *Results of Vapor Space Monitoring of Flammable Gas Watch List Tanks*, Rev. 2, Lockheed Martin Hanford Corporation, Richland, Washington.

HNF-SD-WM-TI-797, 1997, *Results of Vapor Space Monitoring of Flammable Gas Watch List Tanks*, Rev. 2, Lockheed Martin Hanford Corporation, Richland, Washington.

HNF-SD-WM-TSR-006, 1997, *Tank Waste Remediation System Technical Safety Requirements*, Fluor Daniel Hanford, Inc., Richland, Washington.

Johnson, R. N., 1990, *Selection of Spark Resistant Tool Material for Use in 101-SY*, internal memo to R. E. Bauer, Westinghouse Hanford Company, Richland, Washington.

LA-UR-92-3196, 1995, *A Safety Assessment for Proposed Pump Mixing Operations to Mitigate Episodic Gas Releases in Tank 241-SY-101: Hanford Site, Richland, Washington*, Rev. 14, Los Alamos National Laboratory, Los Alamos, New Mexico.

Lawrence, M. J., 1990, *"Unreviewed Safety Question-Waste Storage Tanks,"* (Memo to U.S. Department of Energy-Headquarters, May 14), U.S. Department of Energy, Richland Operations Office, Richland, Washington.

McClusky, J. K., 1996, *Flammable Gas Waste Tank Data Review*, (RL Letter 96-WSD-228 [Correspondence Control Number 9602487 B] to L. Trego, Westinghouse Hanford Company, September 20), U.S. Department of Energy, Richland Operations Office, Richland, Washington.

NFPA 69, 1992, *Explosion Preventions Systems*, National Fire Protection Association, Quincy, Massachusetts.

NFPA 70, *National Electric Code, Articles 500 - Hazardous (Classified) Locations and 501 - Class I Locations*, National Fire Protection Association, Quincy, Massachusetts.

NFPA 77, *Recommended Practice on Static Electricity*, National Fire Protection Association, Quincy, Massachusetts.

NFPA 496, *Standard for Purged and Pressurized Enclosures for Electrical Equipment*, National Fire Protection Association, Quincy, Massachusetts.

PNL-10120, 1994, Gauglitz, P. A., L. A. Mahoney, D. P. Mendoza, and M. C. Miller, *Mechanisms of Gas Bubble Retention*, Pacific Northwest Laboratory, Richland, Washington.

PNL-10740, 1995, Gauglitz, P. A., S. D. Rassat, M. R. Powell, R. R. Shah, L. A. Mahoney, *Gas Bubble Retention and Its Effect on Waste Properties: Retention Mechanisms, Viscosity, and Tensile and Shear Strengths*, Pacific Northwest Laboratory, Richland, Washington.

PNL-10893, 1996, Bredt, P. R. and S. M. Tingey, *The Effect of Dilution on the Gas Retention Behavior of Tank 241-SY-103*, Pacific Northwest National Laboratory, Richland, Washington.

Reynolds, D. A., 1993, *Gas Release from Window G and Protocol for Calculating Gas Releases* (Internal Memo 7K 210-93-502 to G. D. Johnson, January 4), Westinghouse Hanford Company, Richland, Washington.

RL-WHC-TANKFARM-1993-0090, 1993, *Waste Tank 241-SY-101 Safety Analysis Calculation Error for Ammonia Release Mechanism Results in an Unreviewed Safety Question*, Westinghouse Hanford Company, Richland, Washington.

RL-WHC-TANKFARM-1993-0105, 1993, *Methane Gas in SY-101 Discovered to Add 10% Energy to the Burn Analysis Results Included in the Current Safety Assessment*, Westinghouse Hanford Company, Richland, Washington.

RL-WHC-TANKFARM-1994-0073, 1994, *High Flammable Gas and Ammonia Levels Discovered in SX-104 Liquid Observation Well (LOW) During Riser Liner Installation Activities*, Westinghouse Hanford Company, Richland, Washington.

RL-WHC-TANKFARM-1995-0078, 1995, *Vapor Sampling of Core Sampling Drill String Exceed Lower Explosive Limit*, Westinghouse Hanford Company, Richland, Washington.

Schofield, J. S., 1996a, *Evidence of Release Events During Waste Intrusive Activities in Flammable Gas Watch List (FGWL) and Proposed FGWL Tanks*, internal memo 75210-96-006, Rev. 1 to W. B. Barton, February 22, 1996, Westinghouse Hanford Company, Richland, Washington.

Schofield, J. S., 1996b, *Volume of Gas Released for a Given Rise % Rise in the LFL in S-102 and U-109*, internal memo S7-12 to R. E. Raymond, February 22, 1996, Westinghouse Hanford Company, Richland, Washington.

SD-HS-SAR-009, 1983, *242-T Evaporator Facility Shutdown/Standby to Condition V Safety Analysis Report*, Rev. 0, Rockwell Hanford Operations, Richland, Washington.

TF-96-0433 (USQ Tracking No.), 1996, *Consolidation of Flammable Gas/Slurry Growth Unreviewed Safety Question Issues*, Rev. 1, Westinghouse Hanford Company, Richland, Washington.

UL, 1988, *Intrinsically Safe Apparatus for Use in Hazardous Locations*, Underwriters Laboratory, New York, New York.

Wagoner, J. D., 1996, *Contract Number DE-AC06-96RL13200; the U.S. Department of Energy (DOE), Richland Operations Office (RL) Definition and Declaration of Flammable Gas Unreviewed Safety Question*, (RL Letter 96-WSD-283 to H. J. Hatch, Fluor Daniel Hanford, Inc., November 1), U.S. Department of Energy, Richland Operations Office, Richland, Washington.

WHC-EP-0861, 1995, *Status Report for Inactive Miscellaneous Underground Storage Tanks at Hanford Site 200 Areas*, Rev. 0, Westinghouse Hanford Company, Richland, Washington.

WHC-SD-WM-ER-526, 1997, *Evaluation of Hanford Tanks for Trapped Gas*, Rev. 1B, Lockheed Martin Hanford Corporation, Richland, Washington.

WHC-SD-WM-ER-571, 1996, *Evaluation of Hydrogen Release During Saltwell Pumping for Tanks T107, S110 and S108*, Rev. 0, Westinghouse Hanford Company, Richland, Washington.

WHC-SD-WM-ER-576, 1996, *Compilation of Hydrogen Data for 22 Single Shell Flammable Gas Watch List Tanks*, Rev. 0, Westinghouse Hanford Company, Richland, Washington.

WHC-SD-WM-ER-594, 1996, *Evaluation of Recommendation for Addition of Tanks to the Flammable Gas Watch List*, Rev. 0, Westinghouse Hanford Company, Richland, Washington.

WHC-SD-WM-ES-346, 1995, *Flammable Gas Tank Safety Program: Technical Basis for Gas Sampling and Monitoring*, Rev. 0, Westinghouse Hanford Company, Richland, Washington.

WHC-SD-WM-ES-387, 1996, *Probability, Consequences and Mitigation for Lightning Strikes to Hanford Site High-Level Waste Tanks*, Rev. 1, Westinghouse Hanford Company, Richland, Washington.

WHC-SD-WM-FHA-022, 1996, *Fire Hazard Analysis for the 242-S Evaporator*, Rev. 0, Westinghouse Hanford Company, Richland, Washington.

WHC-SD-WM-PD-046, 1995, *Tank Waste Remediation System Inactive, Miscellaneous Underground Storage Tanks Program Plan*, Rev. 0, Westinghouse Hanford Company, Richland, Washington.

WHC-SD-WM-SAD-034, 1996, *A Safety Assessment for Salt Well Pump Operations in Tank 241-A-101: Hanford Site, Richland, Washington*, Rev. 0, Westinghouse Hanford Company, Richland, Washington.

WHC-SD-WM-SAD-035, 1997, *A Safety Assessment of Rotary Mode Core Sampling in Flammable Gas Single Shell Tanks: Hanford Site, Richland, Washington*, Rev. 0-b, Duke Engineering and Services Hanford, Richland, Washington.

WHC-SD-WM-SAR-023, 1995, *242-A Evaporator/Crystallizer Final Safety Analysis Report*, Rev. 2, Westinghouse Hanford Company, Richland, Washington.

WHC-SD-WM-SARR-002, 1996[1], *Safety Basis for Activities in Double-Shell Tanks With Flammable Gas Concerns*, Rev. 1, Westinghouse Hanford Company, Richland, Washington.

WHC-SD-WM-SARR-004, 1996[1], *Safety Basis for Activities in Single-Shell Tanks with Flammable Gas Concerns*, Rev. 1, Westinghouse Hanford Company, Richland, Washington.

WHC-SD-WM-SSP-002, 1988, *242-S Facility Shutdown/Standby Plan*, Rev. 0, Westinghouse Hanford Company, Richland, Washington.

WHC-SD-WM-TI-724, 1995, *Methodology for Flammable Gas Evaluations*, Rev. 0, Westinghouse Hanford Company, Richland, Washington.

WHC-SD-WM-TRP-256, 1996, *Test Evaluation of Industrial Hygiene Hand Held Combustible Gas Monitor*, Rev. 0, Westinghouse Hanford Company, Richland, Washington.

Wilkins, 1995, *Recent Gas Release Events in 241-SY-103*, (internal memo 74A10-95-064 to G. D. Johnson), Westinghouse Hanford Company, Richland, Washington.

Wilkins, 1996a, *Tank 241-AN-103 Data Review Update*, (internal memo 74A10-96-001 to G. D. Johnson), Westinghouse Hanford Company, Richland, Washington.

Wilkins, 1996b, *Tank 241-AW-101 Data Review Update*, (internal memo 74A10-96-004 to G. D. Johnson), Westinghouse Hanford Company, Richland, Washington.

Wilkins, 1996c, *Tank 241-AN-104 Data Review Update*, (internal memo 74A10-96-009 to G. D. Johnson), Westinghouse Hanford Company, Richland, Washington.

Wilkins, 1996d, *Tank 241-AN-105 Data Review Update*, (internal memo 74A10-96-012 to G. D. Johnson) Westinghouse Hanford Company, Richland, Washington.

[1]Only the portion of the references which is reflected in Table EA-2 and EA-3 are used in this JCO. Any control strategies proposed in these documents are superseded by these contained in this JCO.

This page intentionally left blank.

APPENDIX EA

FLAMMABLE GAS SAMPLE RESULTS AND SLURRY GAS LOWER FLAMMABILITY LIMIT

This page intentionally left blank.

LIST OF TERMS

CGM	combustible gas meter
DST	double-shell tank
GRE	gas release event
IHT	industrial hygiene technologist
IMUST	inactive miscellaneous underground storage tank
JCO	Justification for Continued Operation
LFL	lower flammability limit
LOW	liquid observation well
NFPA	National Fire Protection Association
OVM	organic vapor monitor
ppm	parts per million
ppmv	parts per million by volume
PUREX	Plutonium Uranium Extraction (Facility)
RGS	retained gas sample
SHMS	Standard Hydrogen Monitoring System
SST	single-shell tank
TNMHC	total nonmethane organic hydrocarbon
TOC	total organic carbon
USQ	Unreviewed Safety Question

This page intentionally left blank.

APPENDIX EA

FLAMMABLE GAS SAMPLE RESULTS AND SLURRY GAS LOWER FLAMMABILITY LIMIT

EA1.0 FLAMMABLE GAS CONTROL LIMIT BASIS

This appendix provides the basis for establishing the flammable gas control limit at 25% of the lower flammability limit (LFL). It also derives a conservative hydrogen concentration value to use as 25% of the LFL when hydrogen is the only flammable gas being monitored for and other flammable gases may be present. A discussion is included regarding flammable gas monitoring to ensure compliance with the limit.

The National Fire Protection Association (NFPA) recommends (NFPA 69, *Explosion Prevention Systems*) that processes be controlled so that flammable gas concentrations are less than 25% of the LFL, when relying on vapor space flammability levels to preclude the possibility of an ignition. For this reason, a control of less than 25% of the LFL has been established for performing manned activities in and around the facilities identified in this Justification for Continued Operation (JCO).

Because of the uncontrollable nature of gas release events (GREs), it is not possible to ensure that 25% of the LFL is never exceeded. Procedures and controls are in place to minimize the potential for a tank to exceed 25% of the LFL and to cease work in areas common with the tank vapor space, if the flammable gas concentration exceeds this level.

EA2.0 FLAMMABLE GAS COMPOSITIONS AND ASSUMPTIONS REGARDING THE LOWER FLAMMABILITY LIMIT

The flammable gas limit is stated as a percent of the LFL rather than a specific gas concentration. The primary flammable gas generated in the Hanford Site waste tanks is hydrogen which has an LFL of 4.0 volume percent (vol%) (40,000 parts per million by volume [ppmv]) in air. Other flammable gases are frequently present. The gases of potential concern for determination of LFL are ammonia, methane, and carbon monoxide.

EA2.1 AVAILABLE GAS COMPOSITION AND CONCENTRATION DATA

Table EA-1 summarizes the readily available flammable gas, organic vapor and other vapor results from specific combustible gas meter (CGM) readings and samples taken to support the safety program, and from formal vapor samples (Type 2, 3 or 4) taken from single-shell tank (SST) headspaces. The result from one inactive miscellaneous underground storage tank (IMUST) (241-C-301C) is also included.

The specific safety program samples were taken in the tank headspace a nominal 20 feet down from the riser top or a minimum of 3 feet below where the riser enters the tank. These samples were obtained to meet safety program

requirements. They included CGM readings, and drager tube ammonia measurements and total organic carbon (TOC) measurements. Although the CGM readings were essentially the same as routine measurements taken by industrial hygiene technologists (IHTs), they were obtained in specific, controlled work packages. Routine vapor monitoring results taken as part of daily maintenance or operations tasks are not reported in Table EA-1. Of the 46 samples taken, 41 (89%) read 0% of the LFL. Of the 5 samples that showed positive values, all were small, ranging from 1 to 7% of the LFL, and averaged 2.6%. CGM readings are high by approximately 100% per the manufacturer when calibrated on pentane and used for hydrogen monitoring. Applying the manufacturers 0.5 correction factor, the average for the positive reading samples was about 1.3% of the LFL for hydrogen in air. Onsite testing indicates that in concentrations below 1200 parts per million (ppm) hydrogen (3.0% of the LFL for hydrogen in air) the meters are unreliable or read zero. At 1200 ppm they read about the actual % LFL, without the correction factor applied. Above 1200 ppm the units read somewhat high even with the correction factor applied. The CGMs were also shown to indicate conservatively high when used in hydrogen-ammonia and nitrous oxide mixtures. See Section EA4.0 for discussion on CGM accuracy.

Type 2, 3, and 4 vapor samples were taken from the tank headspace using approved procedures. The percent LFL was calculated using Le Chatelier's rule for flammable gases and exclude organic hydrocarbons other than methane. The highest hydrogen, ammonia, and methane values were used, where a range is given. Where below detection limit "<" values are reported, the "<" value was used in the calculations. Carbon monoxide was not included in Table EA-1 because the values were insignificant.

Of the 81 samples reported in Table EA-1, 59 (73%) reported a < value for hydrogen or, when the reported values for hydrogen, ammonia, and methane were used to calculate a percent of the LFL, the result was $\leq$0.5% of the LFL. For the 22 samples that did not have a < value reported for hydrogen and resulted in a calculated concentration greater than 0.5% of the LFL, the values ranged from 0.54 to 2.51% and averaged 1.48% of the LFL.

The % LFL values shown in Table EA-1 are based upon the highest concentration of the flammable gases present in the respective samples. The highest calculated % LFL shown is for 241-A-101. A flammable gas mixture of 786 ppm hydrogen, 800 ppm ammonia and 12 ppm methane (49.19% hydrogen, 50.01% ammonia, 0.80% methane) has a calculated LFL of 63,759 ppm, or 6.4 vol%. With 1,598 ppm of flammable gases present, the percent LFL is (1,598 ÷ 63,759) x 100 = 2.51%. If only hydrogen was being monitored for, the hydrogen at 100% of the LFL for the flammable gas mixture would be 0.4919 x 63,759 = 31,363 ppm, or 3.1% hydrogen. An alarm at 25% of the LFL would be extremely conservative when set at 0.25 x 31363 = 7840 ppm hydrogen. For higher volume gas releases that would result in 60,000+ ppm flammable gases in the vapor space, the hydrogen:ammonia would be much larger than the 0.492:0.501 ratio assumed. This is due to ammonia being a soluble gas that would be in equilibrium with ammonia in solution. In order to get to 30,000 ppm ammonia in the vapor space, the waste concentration would have to have a very high ammonia content, i.e., ammonia would have to be present in the waste as a major chemical constituent, not as a degradation product. The last significant volumes of ammonia bearing wastes sent to tank farms were

declad wastes from Plutonium-Uranium Extraction Facility (PUREX) in the mid-1980s which went to a few selected double-shell tanks (DSTs) in AW and AP farms. Any SSTs which received ammonia wastes from PUREX in the late 1960s or early 1970s would have had the majority of the ammonia evaporated by now.

Nitrous oxide was not considered in the LFL calculations for Table EA-1. Although it is present at about 28% of the hydrogen concentration in Tank 241-A-101, its effect on the calculated vapor phase LFL is negligible. The vapor phase for Tank 241-A-101 has an oxygen concentration approximately 1,000 times the nitrous oxide level.

The total nonmethane organic hydrocarbon (TNMHC) percent LFL was calculated separately from the "normal" LFL and assumed that 45,000 mg/m^3 is equivalent to 100% LFL. The TNMHC values referred to in this appendix includes organic vapors in equilibrium with small quantities of organics in the tank liquids. A concentration of 46,000 mg/m^3 is the LFL for the kerosene hydrocarbons used as an organic diluent in PUREX and some B Plant processing operations (Bates, 1996, *Transmittal of Letter Report "Preliminary Retained Gas Sampler Results for Tank 241-AW-101"*). Further, a value of 45,000 mg/m^3 is normally used as the LFL for the range of organic vapors occasionally found in the Hanford Site waste tanks. Only four tanks showed greater than 0.49% LFL for organic vapors and mists. The four values ranged from 0.49% to 3.80%. Only two tanks (241-C-103 and 241-BY-108) have shown nonmethane organics above 1% of the LFL in the tank headspace (Table EA-1). These organics are mostly kerosene-type hydrocarbons. They are associated with past chemical processing operations that have entered the waste tanks in minor quantities along with aqueous waste streams. Methane is included in the LFL calculations in Table EA-1, but not in the few organic % LFLs. Gaseous nonmethane hydrocarbons such as ethane and propane were not included in the organic vapor LFL calculations, but were included as methane with the LFL calculations supporting Figure EA-1.

Gaseous hydrocarbons such as methane, and to a lesser extent ethane and propane, occasionally are present in low concentrations in waste gases (Table EA-4). They are believed to be formed from degradation of organic chemicals present in the waste in some tanks. By using a conservative concentration for methane (about 0.5 vol% in the undiluted waste gas) in the LFL calculations for Figure EA-1, the contribution of other organics to the LFL can be assumed to have negligible impact on the LFL.

The CGM reading and Type 3 sample for one IMUST were taken from approximately the middle of the tank headspace. No detectable flammable gas was found.

Table EA-1 summarizes the analytical results available for 81 formal vapor samples as of January 1, 1997, and the results of the 46 special tank safety program CGM reading and samples. Fourteen tanks had both types of samples taken. Thus, readily available headspace sample results for 114 SSTs (77% of the total) indicate that 70 to 90% of the sampled tanks show negligible or nondetectable flammable gas levels when no waste intrusive work is being done, and the remaining nominal 10 to 30% of the tanks average about 1.2 to 1.5% of the LFL. The highest CGM reading (7%) equates to approximately 3.5% of the LFL. The highest vapor sample was calculated to correlate to

2.51% of the LFL. One IMUST tank sampled showed no flammable gas present. The highest organic concentration, 3.8% of the LFL, was found in Tank 241-C-103. This waste tank is known to have a significant floating organic layer on top of the waste.

The flammable gases of concern in the waste tanks require an oxidizer to burn. The primary oxidizer in the tank headspace is oxygen, which is present in air at about 20.95 vol%. Nitrous oxide is present in the waste slurry gas, at an estimated nitrous oxide:hydrogen ratio of 0.85 for Tank 241-SY-101 (LA-UR-92-3196, *A Safety Assessment for Proposed Pump Mixing Operations to Mitigate Episodic Gas Releases in Tank 241-SY-101: Hanford Site, Richland, Washington*). Eight core sampling drill strings and one failed liquid observation well (LOW) have shown high LFL readings. Samples obtained from these locations (Table EA-4) indicated nitrous oxide:hydrogen ratio of 0 to 0.86, with an average of 0.40. Analytical results are available (Bates, 1996) from 5 tanks which have had retained gas samples (RGS) taken to date. These show a range of nitrous oxide:hydrogen ratio of 0.06 to 0.40 with an average of 0.17. Nitrous oxide in high concentrations can affect the calculated LFL for the undiluted waste gas as it acts as an oxidizer in addition to any oxygen present. When waste gas is diluted by air in the tank vapor space the nitrous oxide is overshadowed by the oxygen in the air and will thus have little effect on the calculated LFL for the tank vapor space (Section EA2.4).

EA2.2 TECHNICAL BASES FOR LFL

The potential reactions between flammable gases and oxidizers in the waste tanks are in WHC-SD-WM-SARR-002 and -004, (WHC-SD-WM-SARR-002, *Safety Basis for Activities in Double-Shell Tanks with Flammable Gas Concerns* and WHC-SD-WM-SARR-004, *Safety Basis for Activities in Single-Shell Tanks with Flammable Gas Concerns*) and repeated in Table EA-2.

The internal energy of the combustion reaction is defined as the enthalpy of the combustion reaction minus any pressure-volume work done by the process. Mathematically this is:

$$U_{RP} = h_{RP} - RT(n_P - n_R)$$

where h_{RP} is the enthalpy of combustion
R is the ideal gas constant
T is the temperature of the vapor space after mixing (34 °C assumed)
n_P is the number of moles of products
n_R is the number of moles of reactants.

As shown in Table EA-2, the reaction of hydrogen with oxygen generates the least heat per mole of the reactions given. Because of the predominance of hydrogen and ammonia as flammable gases, the major contributor to the total energy released in an ignition event in a tank headspace would be hydrogen or ammonia combining with oxygen.

Waste Slurry Gas Composition. To calculate an LFL for a waste gas mixture, it is necessary to know the waste gas concentration. The waste gas composition has been evaluated extensively for Tank 241-SY-101 and to a lesser extent for other tanks by analyzing the diluted off gas and backing out the contribution from nitrogen and oxygen in air.

Table EA-3 summarizes the values used in LA-UR-92-3196, WHC-SD-WM-SARR-002 and WHC-SD-WM-SARR-004, and WHC-SD-WM-ES-346, *Flammable Gas Tank Safety Program: Technical Basis for Gas Sampling and Monitoring*, as conservative gas mixtures in calculations of tank LFLs. These compositions were based upon DST releases, for which sample results were available, because only negligible significant observed releases from SSTs have occurred since the flammable gas Unreviewed Safety Question (USQ) was declared.

In the fall of 1995, monitoring for flammable gases was initiated inside core sampling drill strings. Since then, eight gas samples have been taken from inside drill strings which have exhibited high LFL readings. The sample results are given in Table EA-4. The samples represent an opportunity to obtain waste gas samples prior to dilution in the tank headspace. Some of the samples have been diluted by nitrogen or argon purge gas, or air in the drill string. Ammonia results from these samples are low, however, due to absorption during the informal grab sampling process, but the ratios of nitrous oxide, carbon monoxide, carbon dioxide, methane, or other C_nH_{2n+2} to hydrogen are useful data. Where the effect of air can be accounted for, the ratio of nitrogen to hydrogen is also given. In mid-1995 a grab sample was retrieved from a failed LOW. Results from this sample are also included in Table EA-4.

In 1996, the first RGSs were taken from Tank 241-AW-101. These samplers were designed to trap waste gases and liquid/solid waste taken during core sampling operations. The samples will allow analysis of concentrated waste gases and provide other information on waste gas makeup. Bates (1996) describes the sampling and analytical process and summarizes the results from the samples obtained to date. These results are given in Table EA-5. The gases in the RGS samples are extracted in the laboratory by repeatedly evacuating the sample and trapping the off gas. Because ammonia is a soluble gas, the ammonia in the gas phase in a waste gas pocket is in equilibrium with ammonia in solution in the waste around it. Thus, more ammonia is drawn out of solution to return the gas phase to equilibrium when an RGS sample is evacuated. Therefore, RGS sample results for ammonia in the gas phase will be biased high if all the recovered ammonia is reported. The ammonia values given in Table EA-5 are calculated quantities based upon the Henry's law constant. The derivation of this value and the calculations performed to estimate the lower bound on the ammonia vapor concentration in the waste gas is described in detail in Bates (1996).

EA2.4 DERIVATION OF 25% OF THE LFL ALARM LIMIT WHEN MONITORING FOR HYDROGEN ONLY

The LFL used in this JCO is the lowest concentration of a flammable gas mixture that will support combustion in the presence of a given oxidizer. The LFL will vary with the oxidizer. Table EA-6 summarizes values from the referenced sources of the LFLs for the flammable gases of concern in air and in nitrous oxide.

Using Le Chatelier's rule, the LFL of an ideal gas mixture can be calculated by

$$LFL_{mix} = \frac{1}{\frac{f_{fg1}}{LFL_{fg1}} + \frac{f_{fg2}}{LFL_{fg2}} + \frac{f_{fg3}}{LFL_{fg3}} + \ldots \frac{f_{fgn}}{LFL_{fgn}}}$$

where f_{fg1} = mole fraction of flammable gas #1
LFL_{fg1} = LFL of flammable gas #1

The LFL_{mix} and the mole fractions of flammable gas 1, 2, etc. are based on the flammable gases present only, i.e., all nonflammable constituents are excluded.

Assumptions, evaluations, and results of previous estimates for hydrogen concentrations that represent the LFL or 25% of the LFL are summarized for consideration in establishing the values used in this JCO.

EA.2.4.1 Tank 241-SY-101

LA-UR-92-3196, Appendix B. This reference estimated the LFL for Tank 241-SY-101 waste gases based on Le Chatelier's rule and using the concentrations given in column 2a of Table EA-3 (after revising to a flammable gas constituent only basis) with the LFL in air values in column 2 of Table EA-6.

The LFL value of the mixture calculates to 5.3 vol% in the tank vapor space based on the flammable gas constituents only, or 11.1 vol% if all waste gas constituents are included. This means that 11.1% of the tank dome space would have to be filled with all the gases in Table EA-3, in the ratios given, with the remaining 88.9% being air, for the tank dome space to be at 100% of the LFL. Monitoring for all the waste slurry gases in the tank dome space is impractical, so the hydrogen concentration at 100% of the LFL is calculated and used as a basis for monitoring. The hydrogen concentration at a waste gas concentration of 11.1 vol% in the tank vapor space calculates to 3.5 vol%. LA-UR-92-3196 gives 3.5% hydrogen in the tank vapor space as a conservative value that would indicate the presence of waste gas at 100% of the LFL in the tank vapor space, with 25% of the LFL being 8,750 ppm. LA-UR-92-3196 recommends using 8,750 ppm as 25% of the LFL, but with an administrative control of 7,500 ppm hydrogen as a monitoring limit to account for instrument uncertainties.

LA-UR-92-3196 discusses the effect of nitrous oxide on the LFL for 241-SY-101. Using the "conservative" composition for 241-SY-101 waste gas, the dome space would contain about 12.7% waste gas when the concentration of

hydrogen reached 4% in the tank dome. With a hydrogen concentration of 4%, the concentrations of ammonia and nitrous oxide would be about 1.9% and 3.4%, respectively. Bureau of Mines data referenced in LA-UR-92-3196 showed that at up to 2% ammonia in a stoichiometric mix of hydrogen and nitrous oxide diluted with air, Le Chatelier's law was appropriate for determining the LFL.

EA.2.4.2 All Tanks

WHC-SD-WM-SARR-002 and -004 Appendices B, and WHC-SD-WM-ES-346. These references used Le Chatelier's rule to arrive at a ppm hydrogen limit that could be used for the vapor space of all tanks. The method included the effect of nitrous oxide on the LFL and looked at varying the hydrogen level in the waste gas. These documents recommended using 6,250 ppm hydrogen as the alarm point for hydrogen monitoring systems to indicate when 25% of the LFL may have been reached in a tank vapor space.

The 6,250 ppm limit is very conservative because the following assumptions were used:

- A LFL of 3.5% was used for hydrogen in air
- A LFL of 8% was used for ammonia in air
- A plot was presented of the waste gas LFL versus the hydrogen concentration in the waste slurry gas excluding noncombustibles. Interpretation of the plot assumed an extremely conservative hydrogen concentration in the waste slurry gas.

EA.2.4.3 Current Data

The sample data from Table EA-1 was used to calculate the % LFL for each tank with formal sample analyses. The tank % LFLs are repeated in Table EA-8 from Table EA-1. The LFL of the flammable gas mixture and the equivalent hydrogen concentration at 25% of the LFL were calculated for the flammable gas mixture in the tank vapor space for all 81 samples. This information is presented in Table EA-8. Also included in Table EA-8 are calculations based upon the sample data from Table EA-4 for the Tank 241-BY-110 drill string and the Tank 241-SX-104 failed LOW.

Where a range was given in Table EA-1, the highest gas concentrations were used. Where a < value is stated, the < value was used as the concentration. The calculated tank vapor space flammable gas LFLs ranged from 4.27% to 10.78% by volume. Hydrogen concentration equivalent to 25% of the LFL ranged from 1,270 ppmv to 9,720 ppmv. The average LFL for all samples (excluding the Tanks 241-BY-110 and 241-SX-104 waste gas samples) was 6.36% and the average hydrogen concentration at 25% of the LFL was 6,150 ppm. The average LFL including only samples with detectable concentrations calculating above 0.5% of the LFL (again, excluding Tanks 241-BY-110 and 241-SX-104 waste gas results) was 5.32% and the average hydrogen concentration at 25% of the LFL was 7,700 ppm. The average of the LFL for the Tanks 241-BY-110 and 241-SX-104 waste gases was 4.29%, and the average hydrogen concentration at 25% of the LFL was 9,310 ppm.

These results are skewed due to the low flammable gas concentrations present, and by using < values instead of zero in the LFL calculations. The results should not be extrapolated to higher flammable gas concentrations, and should not be used as valid hydrogen concentrations at 25% of the LFL. Hydrogen, ammonia, and methane are generated by radiolysis within the waste.

Ammonia is a soluble gas and largely remains in solution. Being in solution in the waste, ammonia will be present in the tank vapor space in equilibrium with dissolved ammonia. For this reason ammonia is present in detectable concentrations in most tank vapor spaces. Hydrogen and methane, being insoluble, can be trapped in pockets instead of being released. This explains the low or non detectable levels of these gases in many tanks. Basing calculated LFLs or hydrogen concentrations at 25% of the LFL on low level tank vapor results is misleading. At low levels of flammable gases in a tank, ammonia will predominate and skew the sample results to give a high tank LFL and a low hydrogen concentration at a calculated 25% of the LFL. Flammable gas levels approaching 25% of the LFL would only occur following a release of significant hydrogen or methane from the waste, which will mean a much lower ratio of ammonia to these gases than is present during steady state releases. Should a GRE occur, significant hydrogen and methane could be released, but the ammonia should be no more than what would be in equilibrium with ammonia in the liquid waste at the tank bottom.

This effect can be seen in the data in Table EA-8. Including all tank vapor space data the calculated hydrogen concentration at 25% of the LFL was 6,150 ppm. This rises to 7,460 ppm when only vapor spaces above 0.5% of the LFL are considered, to 7,700 ppm when only vapor spaces above 2% of the LFL are included, and reaches 9,310 ppm for the waste gas samples at 650% and 64% of the LFL. Based upon this data, 7,500 ppm is a reasonable value for the hydrogen concentration at 25% of the LFL.

EA.2.4.4 Calculated Limit

Limit As Applied To This JCO. LA-UR-92-3196, WHC-SD-WM-SARR-002, WHC-SD-WM-SARR-004, and WHC-SD-WM-ES-346 calculated hydrogen concentrations that give 25% of the LFL for a conservative waste gas composition, but may have some limitations. The method in LA-UR-92-3196 is for Tank 241-SY-101 only. The other references vary the hydrogen content of the waste slurry gas to provide a range of LFLs. They use conservative values for the LFLs for hydrogen and ammonia in air, and a conservative assumption is used in interpretation of the results.

The LFL calculations were redone for this document using the following assumptions:

- The ratios of ammonia:methane:carbon monoxide were kept constant and equal to those in column 2b of Table EA-3.
- The values for LFL in air were assumed equal to those in column 7 of Table EA-6 CRC Handbook of Chemistry and Physics and for LFL in nitrous oxide were assumed equal to those in column 6.

- The LFL values used in subsequent calculations were based on a gas of 92.6% air/7.4% nitrous oxide, as was done for WHC-SD-WM-SARR-002 and -004. This is conservative as the ratios of oxygen to nitrous oxide present in the tank vapor space will be far greater than this, and result in the oxygen swamping the nitrous oxide. A linear interpolation was made between the values for LFL in air and in nitrous oxide for hydrogen, ammonia, and methane. The value for LFL in air was used for carbon monoxide. These resulted in using conservative LFL values of 3.84 for hydrogen, 14.5 for ammonia, 4.69 for methane, and 12.5 for carbon monoxide in the air/nitrous oxide mix.

- The LFL was calculated for a waste slurry gas consisting of the four flammable constituents, with the hydrogen concentration varying, but the other three constituents kept in the same ratio to each other, and making up the remainder of the flammable gas mixture. The percent hydrogen that would occur in the tank vapor space at 100% of the LFL for the waste slurry gas in the tank vapor space was then plotted as a function of the percent hydrogen in the waste slurry flammable gases, (i.e., excluding all noncombustible constituents).

This plot is provided as Figure EA-1 for this JCO. The conservative hydrogen concentration in the 241-SY-101 waste slurry gas (and as used in References 3 and 4), from Table EA-3 column 2a, is 31.41% hydrogen, which is 66.3% of the flammable gases. From Figure EA-1, this equates to a vapor space hydrogen concentration of about 3.4% hydrogen, which is essentially the same as the 3.5% recommended in LA-UR-92-3196.

Estimates of the actual hydrogen concentration in the tank waste gases range from 30 to 70% per WHC-SD-WM-SARR-002 and -004, but this range includes the presence of noncombustibles for significant releases. Including just the combustibles, the hydrogen concentration is expected to be 60% or higher. The "best estimate" gas compositions from LA-UR-92-3196, WHC-SD-WM-SARR-002 and -004, and WHC-SD-WM-ES-346 are given in Table EA-7.

According to this table, the percent hydrogen based on the flammable gases in the waste slurry gas only is 61 to 71%. As shown in Table EA-1, the ratio of hydrogen to ammonia found in tank vapor spaces from chronic releases shows hydrogen could range from less than 10% to greater than 90% of the flammable gases in a tank at very small (<3% of the LFL) concentrations. Experience with monitoring from larger DST releases (the basis for Tables EA-3 and EA-7), and as shown by the waste gas drill string sample results shown in Table EA-4 and RGS sample results in Table EA-5, indicate the majority of flammable gas in GREs or concentrated waste gas samples is hydrogen.

Using Figure EA-1, and assuming 60% of the flammable gas in a waste slurry gas is hydrogen, the hydrogen concentration at 100% of the LFL in a tank vapor space conservatively calculates to 3.22%. Setting a hydrogen concentration that equals 25% of the LFL based on this reasoning calculates to approximately 8,000 ppmv.

EA3.0 SUMMARY

A value of 6,250 ppmv hydrogen shall be assumed as 25% of the LFL for work in tank farms, when hydrogen is the only flammable gas monitored for. This is based on the following:

- LA-UR-92-3196 calculated a value of 8,750 ppm hydrogen as 25% of the LFL for Tank 241-SY-101 waste slurry gas in the tank dome space
- WHC-SD-WM-SARR-002 AND -004 and WHC-SD-WM-ES-346 recommended that a value of 6,250 ppm hydrogen be used as 25% of the LFL for SSTs or DSTs. Overly conservative assumptions were used to derive this number. WHC-SD-WM-SARR-002 and -004 states a value of 7,375 ppm hydrogen should be used as 25% of the LFL if a value of 15% is used for the LFL of ammonia in air.
- Per Table EA-8, the calculated hydrogen concentration at 25% of the LFL could be anywhere from 1,300 ppm to 9,700 ppm for gas mixtures present in very low concentrations. The calculated hydrogen concentration at 25% LFL rises with increasing flammable gas levels and averaged 7,700 ppm for the 7 tanks above 2% of the LFL.
- In this document, a value of about 8,000 ppm hydrogen is calculated as being $\leq$25%of the LFL for tank waste slurry gas in the tank dome space for any tank.
- Based upon the evaluation provided in this appendix, a 7,500 ppm value for hydrogen at 25% of the LFL is reasonable for use in evaluating gas measurements to understand the actual hazard present. However, the conclusion and supporting analysis for the value to use in setting monitoring alarm setpoints and action limits is described in WHC-SD-WM-ES-346. Until this document is revised and reviewed, 6,250 ppm hydrogen will be used for monitoring alarm and action setpoints.

EA4.0 FLAMMABLE GAS MONITORING METHODS

Several methods are used to monitor for various flammable gases or vapors in the tank farms. These include CGMs, organic vapor monitors (OVMs), Drager tubes, Standard Hydrogen Monitoring Systems (SHMS), gas chromatographs, and taking Type 2, 3, and 4 vapor samples. Because this section covers monitoring for hydrogen or flammable gases to demonstrate compliance with the 25% of the LFL control limit, the discussion will address only CGMs, SHMS, and Belhaven monitors.

EA4.1 COMBUSTIBLE GAS METERS

The CGM predominantly used in the tank farms is the Industrial Scientific Corporation model LTX 310. This unit is calibrated on pentane before and after each shift it is used, in accordance with Industrial Hygiene procedures. The manufacturer provides a table of conversion factors to be applied when the model LTX 310 is used for monitoring for gases other than pentane. Following

the manufacturer's information, the CGM reading should be multiplied by a correction factor of 0.5 when monitoring for hydrogen. Thus, a reading of 20% of the LFL on the LTX 310 means that the actual hydrogen concentration is 10% of the LFL, assuming hydrogen is the only flammable gas present. For conservatism, and to avoid confusion in the field, the LTX 310 reading is not multiplied by the correction factor, so a 20% of the LFL reading is treated as 20% of the LFL, not 10%.

According to the manufacturer, the conversion factors to be applied when monitoring for other gases are accurate to about +/-25%. A 25% of the LFL indication on the LTX 310 means that the actual hydrogen concentration is in the nominal range of 9.4% to 15.6% of the LFL. Therefore, without applying the correction factor, the indicated CGM reading is 60 to 167% higher than the actual percent of the LFL for hydrogen, assuming hydrogen is the only flammable gas present. Tank farm procedures require a reading to be treated at the indicated value, so when performing work a 25% of the LFL indication on a CGM is assumed to mean 25% of the LFL for a flammable gas mixture is present.

WHC-SD-WM-TRP-256, *Test Evaluation of Industrial Hygiene Hand Held Combustible Gas Monitor* evaluated the response of the CGMs to hydrogen in air. The data showed that below 3% of the LFL for hydrogen in air (about 1,200 ppm hydrogen), the units were unable to accurately measure the LFL as the concentrations were too low. Around 1,200 ppm the units were fairly accurate without applying the 0.5 correction factor. As the percent hydrogen rose above 1,200 ppm the indicated LFL, even after applying the 0.5 correction factor, was 5 to 40% above the actual. The CGM response was also checked in the presence of nitrous oxide and ammonia. The presence of ammonia and/or nitrous oxide also resulted in the indicated LFL reading being higher than actual after applying the correction factor.

The LTX 310 CGM, as employed in the tank farms, is not applicable for characterization of tank vapor spaces, but can be safely and conservatively used for LFL monitoring to an indicated 25% of the LFL, and is expected to read high for any gas mixture present. Therefore, a 25% of the LFL monitoring limit is acceptable when using these instruments. When 25% of the LFL is indicated, response shall be as required by the flammable gas specification limit of this JCO.

EA4.2 STANDARD HYDROGEN MONITORING SYSTEMS

These monitors are installed on many of the tanks currently on the Flammable Gas Watch List. They operate using a Whittaker cell to detect hydrogen only. These monitors currently have a 6,250 ppm hydrogen set point.

EA4.3 CONTINUOUS INSTALLED COMBUSTIBLE GAS METERS

These meters are currently used to monitor the salt well pit vapor space of several tanks being salt well pumped. These units are calibrated on methane approximately monthly. According to the manufacturer the correlation is 1:1 (no correction factor) when monitoring hydrogen. Based on a test gas mixture of hydrogen, ammonia, and methane in air, the unit read slightly

higher for hydrogen than the level present in the test gas. When measuring a gas with an LFL of 2.5% for hydrogen in air, a value of 3.2% was indicated. Below 5% of the LFL the units appear to read high. The units work best on a concentration of 5 to 30% of the LFL. Based on experience, the installed CGMs can be used to adequately monitor for compliance with the 25% LFL limit using the recommended monitoring limit.

EA4.4 OTHER HYDROGEN/FLAMMABLE GAS MONITORS

Some tanks have gas chromatographs installed to analyze the vapor space. Other hydrogen monitors may be selected for use in the future. Any such monitor may be used for monitoring for compliance with the flammable gas specification limit as long as it is shown to read conservatively at less than 25% of the LFL for a conservative waste gas mixture.

EA5.0 REFERENCES

See Appendix E, E7.0, "REFERENCES."

Table EA-1. Single-Shell Tank and Inactive Miscellaneous Underground Storage Tank Vapor Sample Data. (8 sheets)

Tank	Date[1] Sampled () = Type	TYPE 2/3/4 Sample Results						Grab Sample Results			Calculated Values	
		Hydrogen ppmv	Ammonia ppmv	Methane ppmv	Other Organics mg/m³	Nitrous Oxide ppmv	Water Vapor mg/L	% LFL	Ammonia ppmv	TOC ppmv	% LFL for Flammable Gases	Relative Humidity
A-101	6/9/95 (3)	743-786	728-800	<12	21.9	217-219	26.3-27.1				2.51	69-71
A-102	11/10/95 (3)	294-302	248-263	<4	6.1	225-229	26-28.3				0.93	89-90
A-103	4/6/95 (3)	271-278	256-273	<4	8.2	219-226	25.2-27.7				0.88	93-100
A-104	1/14/96							0	<5	0	0	
A-105	1/19/96							0	30	2.5	0	
A-106												
AX-101	6/15/95 (3)	102-103	39-44	<12	2.6	0	12.6-13.8				0.31	47-51
AX-102	6/29/95 (3)	<98	30-37	<12	9.0	50-51	12.7-14.2				<0.29	71-80
AX-103	6/27/95 (3)	<98	37-44	<12	1.5	23-24	14.7-15.8				<0.30	51-55
AX-104												
B-101	3/26/96							0	20	10.7	0	
B-102	4/18/96 (3)	<17	3.7-5.5	<25	4.2-4.3	59-68	12.7-13.1				<0.1	
B-103	2/8/95 (3) 10/17/96 (4)	<99	7.7-10	<61	12.8	75.9	10.3-11.1				<0.38	87-92
B-104	3/26/96							0	0	1.8	0	
B-105	6/6/96 7/30/96 (4)	<17	5.2-5.9	<25	0.75-0.78	19-31	10.1-12	1	12	3	1 <0.1	
B-106	4/26/96							0	0	0	0	
B-107	6/6/96 7/23/96	<17	17-26	<25	<0.6	<17	13-14.1	2	25	3	2 <0.11	
B-108	4/26/96							0	30	2.4	0	
B-109	6/12/96							0	35	1.8	0	
B-110	4/26/96							0	50	5.5	0	
B-111	3/19/96							0	25	0	0	

Table EA-1. Single-Shell Tank and Inactive Miscellaneous Underground Storage Tank Vapor Sample Data. (8 sheets)

Tank	Date[1] Sampled () = Type	TYPE 2/3/4 Sample Results						Grab Sample Results			Calculated Values	
		Hydrogen ppmv	Ammonia ppmv	Methane ppmv	Other Organics mg/m^3	Nitrous Oxide ppmv	Water Vapor mg/L	% LFL	Ammonia ppmv	TOC ppmv	% LFL for Flammable Gases	Relative Humidity
B-112												
B-201	6/4/96							0	<5	0	0	
B-202	6/4/96 7/18/96 (4)	<17	2.6	<25	<0.6	<17	3.2-14.8	0	<5	0	0 <0.09	
B-203												
B-204	4/26/96							0	<5	0	0	
BX-101	4/24/96							0	50	3.3	0	
BX-102	6/24/96 7/31/96 (4)	<17	2.4-2.5	<25	0.41-0.46	<17	9.2-17.6	0	0	0	0 <0.09	
BX-103	3/26/96							0	70	6.4	0	
BX-104	12/30/94 (3) 8/22/96 (4) 12/13/96 (4)	<94	229-238	<61	77.9	136-150	6.1-7.1				<0.51	
BX-105	4/24/96 (3)	45-56	141-155	<25	4.4-4.5	116-118	10.1-11.1				0.29	
BX-106	12/9/95 8/15/96	<17	42-47	<25	0.9-1.1	43-44	9.3-11.2	0	50	6.7	0 <0.12	
BX-107	11/16/95 (3)	10-14	76-89	<4	2.5	11-13	15.4-17.6				<0.10	92-100
BX-108												
BX-109	4/24/96 (G)							0	20	1.7	0	
BX-110	10/2/95 (G) 4/30/96 (3)	<17	58-66	<25	1.8-2.1	<17	8.5-9.2	0	50	3.8	0 <0.14	
BX-111	4/24/96 (G) 8/27/96 (4)	no data						0	45	2.2	0	
BX-112												
BY-101	8/29/96 (4)	no data										

Table EA-1. Single-Shell Tank and Inactive Miscellaneous Underground Storage Tank Vapor Sample Data. (8 sheets)

Tank	Date[1] Sampled () = Type	TYPE 2/3/4 Sample Results						Grab Sample Results			Calculated Values	
		Hydrogen ppmv	Ammonia ppmv	Methane ppmv	Other Organics mg/m³	Nitrous Oxide ppmv	Water Vapor mg/L	% LFL	Ammonia ppmv	TOC ppmv	% LFL for Flammable Gases	Relative Humidity
BY-102	11/20/95 (3)	33-37	170-180	<4	18.3	17-18	14.5-16				0.22	
BY-103	11/1/94 (3)	21-22	24-30	<61	10.7	16-49.2	11.4-16				<0.20	54-76
BY-104	6/24/94 (3)	204-312	242-255	8-9	54.7	195-308	14.1-16.7				0.96	62-73
BY-105	7/7/94 (3)	84-87	41-44	3.8	11.6	49-122	16.5-17.6				0.25	70-75
BY-106	7/8/94 (3)	40-104	72-78	3.6	12.7	70-98	11.4-18.9				0.32	47-75
BY-107	10/26/94 (3)	687-698	963-978	<20	151.9	587-827	13.1-15.9				2.42	55-68
BY-108	10/27/94 (3) 1/26/96 (3/4) 3/28/96 (3/4) 9/10/96 (3) 11/15/96 (3)	335-647 all data not availabl e	779-1140	7.8-20	177-610	440-762	11.2-63.6				2.39 1.17 org	48-100
BY-109	?				18.1							
BY-110	11/11/94 (3)	<160	385-426	<61	43.8	81-125	8.9-12.5				<0.80	40-54
BY-111	11/16/94 (3)	65-69	57-61	<61	8.5	98-99	6.9-9.1				0.33	37-48
BY-112	11/18/94 (3)	<94	54-71	<61	12.6	33-44	11.3-13.8				<0.40	72-74
C-101	9/1/94 (3)	434-439	96-99	12	221.6	639-650	36-37				1.19 0.49 org	97-100
C-102	8/23/94 (3)	131-165	183-192	12	279.5	108-156	22-26				0.56 0.62 org	100
C-103	4/15/94 (3)	676-894	308-349	13.2-17 .7	1709.6	505-947	15.7-81				2.50 3.80 org	100
C-104	3/3/94 (3)	60-76	44	neg	25.4	62-67	13.9-15.5				0.22	55-58
C-105	2/16/94 (2)	20-24	1.9-2.7	neg	1.4	5-5.5	6.1-8.7				0.06	42-60
C-106	2/15/94 (2)	8-12	0.2-8.8	neg	0.4	3.4-4.3	0.9-23.3				0.04	50-100

Table EA-1. Single-Shell Tank and Inactive Miscellaneous Underground Storage Tank Vapor Sample Data. (8 sheets)

Tank	Date[1] Sampled () = Type	TYPE 2/3/4 Sample Results						Grab Sample Results			Calculated Values	
		Hydrogen ppmv	Ammonia ppmv	Methane ppmv	Other Organics mg/m^3	Nitrous Oxide ppmv	Water Vapor mg/L	% LFL	Ammonia ppmv	TOC ppmv	% LFL for Flammable Gases	Relative Humidity
C-107	9/29/94 (3) 1/17/96 (3/4) 3/26/96 (3/4) 9/6/96 (3) 12/17/96 (3)	110-258 all data not availabl e	45-87	<20	2.8-3.7	35-78	29-85				0.74	100
C-108	8/5/94 (3)	14-16	2.4-3.3	0.1	0.3	343-345	18-22				0.04	85-100
C-109	8/9/94 (3)	124-125	9.1-11.4	0.9	1.4	367-371	21-24				0.32	85-100
C-110	8/24/94 (3)	12	120-130	<61	20.5	6.6-22	13-15				<0.24	88-100
C-111	9/13/94 (3)	10-14	4.7-6.8	0.3	1.0	98-100	23-27				0.04	87-100
C-112	8/11/94 (3)	200-210	22-23	1.0	3.0	534-547	24-28				0.54	100
C-201	6/19/96 (4)	<17	<1.4	<25	2.6-2.7	<17	8.6-11.6				<0.09	
C-202	6/26/96 (4)	<17	<0.7	<25	1.0-1.4	<17	7.6-8.3				<0.09	
C-203												
C-204	6/3/96 7/2/96	<17	0.7-0.8	0.16-21	76-82	0.7-0.9	7.6-8.1	0	0	13.7	0 <0.09	
S-101	4/3/96 6/6/96 (4)	439-444	764-777	0.2-177	8.3	267-274	17.8-20.9	7	600	31	7 1.96	
S-102	3/6/95 (3) 1/26/96 (3/4) 4/3/96 (3/4) 9/19/96 (3) 12/19/96 (3)	613-740 all data not availabl e	402-642	<12	15-20	487-707	12-16.4				2.29	75-100
S-103	5/17/96 6/12/96	78-81	147-153	<0.2-16	1.2-1.3	134-139	10.9-11.5	0	300	2.6	0 0.33	
S-104	3/19/96 (G)							0	25	0	0	
S-105	12/13/95 (3)	20-22	34-38	<4	2.6	7-8	10.1-11.3				0.09	60-69

Table EA-1. Single-Shell Tank and Inactive Miscellaneous Underground Storage Tank Vapor Sample Data. (8 sheets)

Tank	Date[1] Sampled () = Type	TYPE 2/3/4 Sample Results						Grab Sample Results			Calculated Values	
		Hydrogen ppmv	Ammonia ppmv	Methane ppmv	Other Organics mg/m³	Nitrous Oxide ppmv	Water Vapor mg/L	% LFL	Ammonia ppmv	TOC ppmv	% LFL for Flammable Gases	Relative Humidity
S-106	5/17/96 (G) 6/13/96 (4)	<17	32-39	<0.8-16	1.76-1.91	<0.2-17	8.5-9.2	0	40	1.6	0 <0.10	
S-107	6/18/96 (4)	360-366	176-187	<25	3.52-3.57	91-92	22.8-23.6				1.09	
S-108	12/15/95 (3)	21-23	24-27	<4	2.9	3	12-13.4				0.08	72-81
S-109	5/17/96 (G) 6/4/96 (4)	<17	43-48	<25	3.08-4.11	<17	10.6-11.1	0	80	3	0 <0.12	
S-110	12/4/95 (3)	132-139	141-153	<4	4.2	39-40	15.9-17.6				0.45	68-70
S-111	3/13/95 (3)	390-392	115-124	<23	3.7	46-50	12.4-12.8				1.11	80-85
S-112	7/11/95 (3)	<25	86-90	<25	5.5	0	13.3				<0.17	80-82
SX-101	7/19/95 (3)	<25	3.4-4.2	<25	1.5	0	11.3-12.4				<0.12	23-26
SX-102	7/21/95 (3)	<25	15-16	<25	1.6	0	4.9-12.4				<0.12	15-37
SX-103	3/20/95 (3)	<23	71-80	<23	2.0	0	13.9-14.7				<0.16	37-38
SX-104	7/25/95 (3)	<25	24-26	<25	1.6	0	8.6-9.9				<0.13	29-33
SX-105	7/26/95 (3)	<25	25-30	<25	1.7	0	10.6-13.9				<0.13	31-38
SX-106	3/27/95 (3)	<98	171-188	<12	2.4	14	16.5-16.7				<0.39	64-65
SX-107												
SX-108												
SX-109	8/1/95 (3) (Duct)	<25	16-18	<25	1.6	0	7.1-8.7				<0.12	8-10
SX-110												
SX-111												
SX-112												
SX-113												
SX-114												

Table EA-1. Single-Shell Tank and Inactive Miscellaneous Underground Storage Tank Vapor Sample Data. (8 sheets)

Tank	Date[1] Sampled () = Type	TYPE 2/3/4 Sample Results						Grab Sample Results			Calculated Values	
		Hydrogen ppmv	Ammonia ppmv	Methane ppmv	Other Organics mg/m^3	Nitrous Oxide ppmv	Water Vapor mg/L	% LFL	Ammonia ppmv	TOC ppmv	% LFL for Flammable Gases	Relative Humidity
SX-115	3/8/96							0	0	0	0	
T-101												
T-102	5/9/96							0	0	0	0	
T-103	2/15/96							0	0	0	0	
T-104	2/7/96 (3/4)	4-17 all data not availabl e	102-110	<4	1.9	7-8	11.6-12.6				0.12	90-100
T-105	5/9/96							0	150	4.9	0	
T-106	5/9/96							0	100	2.4	0	
T-107	1/18/95 (3)	<94	122-127	<61	3.8	35.6-48	13.1-13.5				<0.44	98-100
T-108	5/9/96							0	20	1.2	0	
T-109	5/9/96							0	5	1.2	0	
T-110	8/3/95 (3)	<25	108-109	<25	1.6	0	16.6-17.1				<0.18	100
T-111	1/20/95 (3)	<94	225-227	<61	22.5	0	12.5-13.1				<0.50	98-100
T-112	5/9/96							0	40	1.2	0	
T-201												
T-202												
T-203	3/19/96							0	0	1.6	0	
T-204												
TX-101	6/14/96							0	20	6.8	0	
TX-102	6/20/96							0	100	15.5	0	
TX-103	6/17/96							0	100	14.9	0	

Table EA-1. Single-Shell Tank and Inactive Miscellaneous Underground Storage Tank Vapor Sample Data. (8 sheets)

Tank	Date[1] Sampled () = Type	TYPE 2/3/4 Sample Results						Grab Sample Results			Calculated Values	
		Hydrogen ppmv	Ammonia ppmv	Methane ppmv	Other Organics mg/m^3	Nitrous Oxide ppmv	Water Vapor mg/L	% LFL	Ammonia ppmv	TOC ppmv	% LFL for Flammable Gases	Relative Humidity
TX-104												
TX-105	12/20/94 (3)	<99	19-21	<61	4.6	12.8	14.1-16.3				<0.38	72-82
TX-106												
TX-107												
TX-108												
TX-109												
TX-110												
TX-111	10/11/95 (3)	107-110	588-638	<25	13.1	175-178	12.8-14.5				0.74	89-100
TX-112												
TX-113	6/18/96							0	20	2	0	
TX-114	6/18/96							0	150	8	0	
TX-115												
TX-116	3/19/96							0	0	6	0	
TX-117	3/19/96							0	25	0	0	
TX-118	12/16/94 (3)	96-98	31-36	<61	10.7						0.39	50-62
TY-101	4/5/95 (3)	<93	15-17	<12	1.7						<0.27	81-83
TY-102	4/12/96 (3)	<3.1	4.0-4.1	<4.3	3.08-4.11	66-88	9.3-10				<0.02	
TY-103	4/13/95 (3) 11/6/96 (4)	<93	47-51	<12	55.6	130-201	12.6-12.9				<0.29	94-100
TY-104	4/26/95 (3)	<49	57-62	<23	2.8						<0.21	100
TY-105												
TY-106												
U-101	2/14/96							1	100	7.4	1	

Table EA-1. Single-Shell Tank and Inactive Miscellaneous Underground Storage Tank Vapor Sample Data. (8 sheets)

Tank	Date[1] Sampled () = Type	TYPE 2/3/4 Sample Results						Grab Sample Results			Calculated Values	
		Hydrogen ppmv	Ammonia ppmv	Methane ppmv	Other Organics mg/m^3	Nitrous Oxide ppmv	Water Vapor mg/L	% LFL	Ammonia ppmv	TOC ppmv	% LFL for Flammable Gases	Relative Humidity
U-102												
U-103	2/15/95 (3)	552-557	720-761	<61	20.9						2.01	90-100
U-104	5/10/96 (M) 7/16/96 (4)	no data						0	<5	0	0	
U-105	2/24/95 (3)	<49	275-354	<23	7.9						<0.40	97-98
U-106	2/26/95 (3)	203-214	931-1013	<61	19.1						1.31	98-100
U-107	2/17/95 (3)	496-505	425-474	<12	15.4						1.59	88-93
U-108	8/18/95 (3)	518-524	679-701	<25	14.5						1.81	77-80
U-109	8/10/95 (3)	724-770	556-608	<25	14.4						2.37	66-70
U-110	3/19/96							2	450	26	2	
U-111	2/20/95 (3)	244-250	671-682	<12	12.3						1.09	79-85
U-112	7/9/96 (4) 12/6/96 (4)	231-233	289-326	<25	1.85-2.16	394-400	7.5-14				0.84	
U-201												
U-202												
U-203	8/9/95 (3)	<25	0.8-1	.25	13.4						<0.11	90-95
U-204	8/7/95 (3)	<25	0.1-0.2	<25	6.5						<0.11	100
C-301 IMUST	9/29/95 (3)	<25	N/A	N/A	2.1			0	0	0	0 <0.06	

Notes: [1]Dates are in the mm/dd/yy format.

Table EA-2. Combustion Reactions and Internal Energy of Reaction.

Reaction	U_{RP} kJ/mole fuel
$H_2 + 0.5\ O_2 \rightarrow H_2O$	-240.55
$H_2 + N_2O \rightarrow H_2O + N_2$	-323.80
$NH_3 + 0.75\ O_2 \rightarrow 1.5\ H_2O + 0.5\ N_2$	-317.44
$NH_3 + 1.5\ N_2O \rightarrow 1.5\ H_2O + 2\ N_2$	-442.45
$CH_4 + 2\ O_2 \rightarrow H_2O + CO_2$	-798.31
$CH_4 + 4\ N_2O \rightarrow 2\ H_2O + CO_2 + 4\ N_2$	-1,132.10
$CO + 0.5\ O_2 \rightarrow CO_2$	-281.72
$CO + N_2O \rightarrow CO_2 + N_2$	-365.04

Table EA-3. Conservative Estimates of Waste Gas Composition Used in Previous LFL Calculations.

Gas	LA-UR-92-3196, Rev 14, App B WHC-SD-WM-SARR-002/004 Rev 1, App B		WHC-SD-WM-ES-346 Rev 0	
	Composition	Gas/H_2 Ratio	Composition	Gas/H_2 Ratio
Hydrogen	31.41 vol %	1	28.42 vol %	1
Ammonia	14.95 %	0.48	22.15 %	0.78
Methane	0.53 %	0.017	0.48 %	0.017
Others	0.5 %	0.016	0.50 %	0.018
Nitrous Oxide	26.69 %	0.85	24.16 %	0.85
Nitrogen	23.51 %	0.75	21.23 %	0.75
Water	2.4 %	remainder	3.07 %	remainder

LA-UR-92-3196, 1995, Safety Assessment for Proposed Pump Mixing Operations to Mitigate Episodic Gas Releases in Tank 241-SY-101: Hanford Site, Richland, Washington, Rev. 14, Los Alamos National Laboratory, Los Alamos, New Mexico.

WHC-SD-WM-ES-346, 1995, Flammable Gas Tank Safety Program: Technical Basis for Gas Sampling and Monitoring, Rev. 0, Westinghouse Hanford Company, Richland, Washington.

WHC-SD-WM-SARR-002, 1996, Safety Basis for Activities in Double-Shell Tanks with Flammable Gas Concerns, Rev. 1, Westinghouse Hanford Company, Richland, Washington.

WHC-SD-WM-SARR-004, 1996, Safety Basis for Activities in Single-Shell Tanks with Flammable Gas Concerns, Rev. 1, Westinghouse Hanford Company, Richland, Washington.

Table EA-4. Waste Gas Sample Results From Drill String Grab Samples/Failed LOWs (all values in Vol %).

Gas	Composition									Hydrogen:Gas Ratio								
H_2	0.68[1]	24	0.315	6.2	2.69	0.65	6.8	9.6	2.4	1	1	1	1	1	1	1	1	1
NH_3[7]	-	0.28[2]	<0.001	<0.01	<0.01	none	<0.001	<0.001	0.045 field?	-	86	-	-	-	-	-	-	53
CH_4	0.011[1]	0.83[3]	0.0002	0.08	0.021	0.011	0.183	0.041	0.02	62	29	>1000	78	128	59	37	234	120
C_2H_x	-	1[3]	<0.001	0.02	<0.001	<0.001	0.104	0.047	-	-	24	-	310	-	-	65	204	-
C_3H_x	-	-	-	-	-	-	-	0.01	-	-	-	-	-	-	-	-	960	-
Oth C_xH_y	-	0.6[3]	<0.001	0.001	<0.001	<0.001	0.01	0.02	-	-	40	-	>1000	-	-	680	480	-
ΣC_xH_y	0.011	2.43	0.0002	0.101	0.021	0.011	0.297	0.118	0.02	62	9.9	>1000	61	128	59	23	81	120
N_2O	0.09[1]	15	<0.01	5.31	1.61	0.423	2.29	1.04	0.64	7.6	1.6	-	1.2	1.7	1.5	3.0	9.2	3.8
Oth NO_x	-	-	-	0.05	0.005	-	-	-	-	-	-	-	124	538	-	-	-	-
CO_2	-	-	0.028	-	-	-	-	-	0.0017	-	-	11	-	-	-	-	-	-
N_2	-	57	79.9	88.3	89.3	94.87	38.2 (10.0)[6]	43.8 (9.5)[6]	-	-	.4	.8	.4	.4	.4	0.68[6]	1.0[6]	-
O_2	-	1	18.8	0.047	6.1	3.86	7.3	9.2	-	-	.4	.8	.4	.4	.4	.6	.6	-
Ar	-	-	0.96	-	.293	0.18	45.1[5]	36.3[5]	-	-	-	-	-	-	-	-	-	-
CO	-	-	-	-	-	-	-	-	0.39	-	-	-	-	-	-	-	-	6.2

1 Remaining gas concentrations not readily available for S-107 drill string grab sample.
2 A drager tube sample of the drill string taken about the time of the gas sample indicated about 1000 ppm ammonia (0.1 %).
3 OVM reading of the drill string taken about the time of the gas sample indicated an organic level of 234 ppm (0.02 %).
4 Nitrogen and oxygen ratios not meaningful as majority of nitrogen believed from drill string purge gas, and oxygen present believed from air inleakage.
5 Argon present due to argon used to purge drill string of flammable gases.
6 Nitrogen in waste gas derived by calculating nitrogen contamination from air at 3.7279[oxygen], and subtracting this from total nitrogen.
7 Ammonia values may be low due to gas absorbing on walls of sampling equipment, or for S-107, AN-104 and AN-103 due to absorption in the LiBr solution in the drill string.
8 Nitrogen and oxygen ratios not meaningful as majority of nitrogen/oxygen believed from air inleakage.

Table EA-5. Summary of RGS Sample Results.

	AW-101	A-101	AN-105	AN-104	AN-103
Maximum Percent Waste Gas in The Non-Convective Layer	4.2 ± 0.4%	17.8 ± 1.1%	11.1 ± 0.9%	13.3 ± 1.3%	11.0 ± 1
Mole % H_2 in Vapor	31 ± 2.5%	75 ± 3.8%	63 ± 3.8%	47 ± 3.9%	61 ± 7.7
Mole % N_2O in Vapor	4.3 ± 0.4%	5.6 ± 0.3%	11 ± 0.8%	19 ± 1.7%	3.8 ± 0.
Mole % N_2 in Vapor	60 ± 5.2%	16 ± 0.9%	25 ± 2.2%	32 ± 3.1%	34 ± 4.5
Lower Bound on Mole % NH_3 in Vapor	0.02 ± 0.02%	2.4 ± 1.3%	0.02 ± 0.02%	0.02 ± 0.02%	0.05%

Table EA-6. Summary of Lower Flammability Limit Values for Selected Waste Slurry Flammable Gas Constituents in Air and Nitrous Oxide Used in Lower Flammability Limit Calculations.

Gas	LA-UR-92-3196 App B Rev 14	WHC-SD-WM-ES-346 Rev 0		WHC-SD-WM-SARR -004 Rev 1		CRC Handbook 68th Edition
	Air	Air/O_2	N_2O	Air	N_2O	Air
Hydrogen	4%	3.5[1]	1.8	3.5[1]	1.8	4.00
Ammonia	15%	8.0	2.0	8.0[2]	2.0	15.50
Methane	5.5%	5.0	0.8	5.0	0.8	5.00
Carbon Monoxide	12.5%	12.5	--	12.5	--	12.50

[1]LFL @ 400 °K (127 °C). Other LFLs given at 20-25 °C.

[2]Based upon an LFL for upward propagation. Per footnote in reference, further investigation does not show support for using this value.

CRC Handbook of Chemistry and Physics, 68th Edition, R. C. Weast et al, 1987.

LA-UR-92-3196, 1995, A Safety Assessment for Proposed Pump Mixing Operations to Mitigate Episodic Gas Releases in Tank 241-SY-101: Hanford Site, Richland, Washington, Rev. 14, Los Alamos National Laboratory, Los Alamos, New Mexico.

WHC-SD-WM-ES-346, 1995, Flammable Gas Tank Safety Program: Technical Basis for Gas Sampling and Monitoring, Rev. 0, Westinghouse Hanford Company, Richland, Washington.

WHC-SD-WM-SARR-004, 1996, Safety Basis for Activities in Single-Shell Tanks with Flammable Gas Concerns, Rev. 1, Westinghouse Hanford Company, Richland, Washington.

Table EA-7. "Best" Estimates of Waste Gas Composition.

Gas	LA-UR-92-3196 App B Rev 14 and WHC-SD-WM-SARR-002/ 004 Rev 1, Appendix B	WHC-SD-WM-ES-346 Rev 0
Hydrogen	28.77 vol %	26.66 vol %
Ammonia	10.95 %	16.53 %
Methane	0.35 %	0.33 %
Others	0.25 %	0.25 %
Nitrous Oxide	24.45 %	22.66 %
Nitrogen	32.82 %	30.40 %
Water	2.4 %	3.07 %

LA-UR-92-3196, 1995, A Safety Assessment for Proposed Pump Mixing Operations to Mitigate Episodic Gas Releases in Tank 241-SY-101: Hanford Site, Richland, Washington, Rev. 14, Los Alamos National Laboratory, Los Alamos, New Mexico.

WHC-SD-WM-ES-346, 1995, Flammable Gas Tank Safety Program: Technical Basis for Gas Sampling and Monitoring, Rev. 0, Westinghouse Hanford Company, Richland, Washington.

WHC-SD-WM-SARR-002, 1996, Safety Basis for Activities in Double-Shell Tanks with Flammable Gas Concerns, Rev. 1, Westinghouse Hanford Company, Richland, Washington.

WHC-SD-WM-SARR-004, 1996, Safety Basis for Activities in Single-Shell Tanks with Flammable Gas Concerns, Rev. 1, Westinghouse Hanford Company, Richland, Washington.

Table EA-8. Single-Shell Tank Calculated LFL Values. (8 sheets)

Tank	Date[1] Sampled () = Type	TYPE 2/3/4 Sample Results				Calculated Values			
		Hydrogen ppmv	Ammonia ppmv	Methane ppmv	Other Organics mg/m^3	% LFL for Tank Vapor Space	LFL for Flammable Gas Mixture	% Hydrogen @ 100% LFL	% Hydrogen @ 25% LFL
A-101	6/9/95 (3)	743-786	728-800	<12	21.9	2.51	6.38	3.14	7840
A-102	11/10/95 (3)	294-302	248-263	<4	6.1	0.93	6.10	3.24	8090
A-103	4/6/95 (3)	271-278	256-273	<4	8.2	0.88	6.31	3.16	7910
A-104									
A-105									
A-106									
AX-101	6/15/95 (3)	102-103	39-44	<12	2.6	0.31	5.13	3.32	8310
AX-102	6/29/95 (3)	<98	30-37	<12	9.0	<0.29	5.02	3.35	8370
AX-103	6/27/95 (3)	<98	37-44	<12	1.5	<0.30	5.18	3.30	8240
AX-104									
B-101									
B-102	4/18/96 (3)	<17	3.7-5.5	<25	4.2-4.3	<0.096	4.95	1.78	4420
B-103	2/8/95 (3) 10/17/96 (4)	<99	7.7-10	<61	12.8	<0.38	4.52	2.63	6580
B-104									
B-105	7/30/96 (4)	<17	5.2-5.9	<25	0.75-0.78	<0.096	4.97	1.77	4410
B-106									
B-107	7/23/96	<17	17-26	<25	<0.6	<0.11	6.22	1.56	3890
B-108									
B-109									
B-110									
B-111									
B-112									
B-201									

Table EA-8. Single-Shell Tank Calculated LFL Values. (8 sheets)

Tank	Date[1] Sampled () = Type	TYPE 2/3/4 Sample Results				Calculated Values			
		Hydrogen ppmv	Ammonia ppmv	Methane ppmv	Other Organics mg/m^3	% LFL for Tank Vapor Space	LFL for Flammable Gas Mixture	% Hydrogen @ 100% LFL	% Hydrogen @ 25% LFL
B-202	7/18/96 (4)	<17	2.6	<25	<0.6	<0.094	4.74	1.81	4510
B-203									
B-204									
BX-101									
BX-102	7/31/96 (4)	<17	2.4-2.5	<25	0.41-0.46	<0.094	4.73	1.81	4520
BX-103									
BX-104	12/30/94 (3) 8/22/96 (4) 12/13/96 (4)	<94	229-238	<61	77.9	<0.51	7.70	1.84	4600
BX-105	4/24/96 (3)	45-56	141-155	<25	4.4-4.5	0.29	8.14	1.93	4830
BX-106	8/15/96	<17	42-47	<25	0.9-1.1	<0.12	7.25	1.38	3460
BX-107	11/16/95 (3)	10-14	76-89	<4	2.5	<0.10	10.66	1.39	3490
BX-108									
BX-109									
BX-110	4/30/96 (3)	<17	58-66	<25	1.8-2.1	<0.14	8.00	1.26	3150
BX-111	8/27/96 (4)	no data							
BX-112									
BY-101	8/29/96 (4)	no data							
BY-102	11/20/95 (3)	33-37	170-180	<4	18.3	0.22	10.20	1.71	4270
BY-103	11/1/94 (3)	21-22	24-30	<61	10.7	<0.20	5.75	1.12	2800
BY-104	6/24/94 (3)	204-312	242-255	8-9	54.7	0.96	5.98	3.24	8100
BY-105	7/7/94 (3)	84-87	41-44	3.8	11.6	0.25	5.32	3.43	8580
BY-106	7/8/94 (3)	40-104	72-78	3.6	12.7	0.32	5.85	3.28	8190
BY-107	10/26/94 (3)	687-698	963-978	<20	151.9	2.42	7.02	2.89	7220

Table EA-8. Single-Shell Tank Calculated LFL Values. (8 sheets)

Tank	Date[1] Sampled () = Type	TYPE 2/3/4 Sample Results				Calculated Values			
		Hydrogen ppmv	Ammonia ppmv	Methane ppmv	Other Organics mg/m³	% LFL for Tank Vapor Space	LFL for Flammable Gas Mixture	% Hydrogen @ 100% LFL	% Hydrogen @ 25% LFL
BY-108	10/27/94 (3) 1/26/96 (3/4) 3/28/96 (3/4) 9/10/96 (3) 11/15/96 (3)	335-647 all data not available	779-1140	7.8-20	177-610	2.39 1.17 org	7.55	2.70	6760
BY-109									
BY-110	11/11/94 (3) 10/24/95 (DS)	<160 240,000	385-426 2800	<61 8,300 CH_4 10,000 C_2H_6 6,000 C_xH_y	43.8 234 ppmv	<0.80 650 (DS)	8.12 4.10	2.01 3.69	5020 9220
BY-111	11/16/94 (3)	65-69	57-61	<61	8.5	0.33	5.72	2.07	5170
BY-112	11/18/94 (3)	<94	54-71	<61	12.6	<0.40	5.61	2.33	5830
C-101	9/1/94 (3)	434-439	96-99	12	221.6	1.19 0.49 org	4.64	3.70	9260
C-102	8/23/94 (3)	131-165	183-192	12	279.5	0.56 0.62 org	6.58	2.94	7360
C-103	4/15/94 (3)	676-894	308-349	13.2-17.7	1709.6	2.50 3.80 org	5.05	3.58	8960
C-104	3/3/94 (3)	60-76	44	neg	25.4	0.22	5.49	3.48	8700
C-105	2/16/94 (2)	20-24	1.9-2.7	neg	1.4	0.06	4.32	3.89	9720
C-106	2/15/94 (2)	8-12	0.2-8.8	neg	0.4	0.04	5.83	3.36	8410
C-107	9/29/94 (3) 1/17/96 (3/4) 3/26/96 (3/4) 9/6/96 (3) 12/17/96 (3)	110-258 all data not available	45-87	<20	2.8-3.7	0.74	4.92	3.48	8700
C-108	8/5/94 (3)	14-16	2.4-3.3	0.1	0.3	0.04	4.58	3.78	9450
C-109	8/9/94 (3)	124-125	9.1-11.4	0.9	1.4	0.32	4.27	3.89	9720

Table EA-8. Single-Shell Tank Calculated LFL Values. (8 sheets)

Tank	Date[1] Sampled () = Type	TYPE 2/3/4 Sample Results				Calculated Values			
		Hydrogen ppmv	Ammonia ppmv	Methane ppmv	Other Organics mg/m^3	% LFL for Tank Vapor Space	LFL for Flammable Gas Mixture	% Hydrogen @ 100% LFL	% Hydrogen @ 25% LFL
C-110	8/24/94 (3)	12	120-130	<61	20.5	<0.24	8.61	0.51	1270
C-111	9/13/94 (3)	10-14	4.7-6.8	0.3	1.0	0.04	5.28	3.50	8750
C-112	8/11/94 (3)	200-210	22-23	1.0	3.0	0.54	4.32	3.88	9670
C-201	6/19/96 (4)	<17	<1.4	<25	2.6-2.7	<0.09	4.65	1.82	4550
C-202	6/26/96 (4)	<17	<0.7	<25	1.0-1.4	<0.09	4.59	1.83	4570
C-203									
C-204	7/2/96	<17	0.7-0.8	0.16-21	76-82	<0.085	4.56	2.00	5000
S-101	6/6/96 (4)	439-444	764-777	0.2-177	8.3	1.96	7.11	2.26	5650
S-102	3/6/95 (3) 1/26/96 (3/4) 4/3/96 (3/4) 9/19/96 (3) 12/19/96 (3)	613-740 all data not available	402-642	<12	15-20	2.29	6.09	3.23	8080
S-103	6/12/96	78-81	147-153	<0.2-16	1.2-1.3	0.33	7.50	2.43	6080
S-104									
S-105	12/13/95 (3)	20-22	34-38	<4	2.6	0.088	7.31	2.51	6280
S-106	6/13/96 (4)	<17	32-39	<0.8-16	1.76-1.91	<0.10	7.22	1.71	4260
S-107	6/18/96 (4)	360-366	176-187	<25	3.52-3.57	1.09	5.32	3.37	8430
S-108	12/15/95 (3)	21-23	24-27	<4	2.9	0.083	6.51	2.77	6930
S-109	6/4/96 (4)	<17	43-48	<25	3.08-4.11	<0.12	7.29	1.38	3440
S-110	12/4/95 (3)	132-139	141-153	<4	4.2	0.45	6.51	3.06	7650
S-111	3/13/95 (3)	390-392	115-124	<23	3.7	1.11	4.87	3.54	8860
S-112	7/11/95 (3)	<25	86-90	<25	5.5	<0.17	8.21	1.47	3660

Table EA-8. Single-Shell Tank Calculated LFL Values. (8 sheets)

Tank	Date[1] Sampled () = Type	TYPE 2/3/4 Sample Results				Calculated Values			
		Hydrogen ppmv	Ammonia ppmv	Methane ppmv	Other Organics mg/m^3	% LFL for Tank Vapor Space	LFL for Flammable Gas Mixture	% Hydrogen @ 100% LFL	% Hydrogen @ 25% LFL
SX-101	7/19/95 (3)	<25	3.4-4.2	<25	1.5	<0.12	4.70	2.17	5420
SX-102	7/21/95 (3)	<25	15-16	<25	1.6	<0.12	5.37	2.04	5090
SX-103	3/20/95 (3)	<23	71-80	<23	2.0	<0.16	8.12	1.48	3710
SX-104	7/20/95 (LOW) 7/25/95 (3)	24000 <25	450 24-26	200 <25	- 1.6	64 (LOW) <0.13	4.47 5.88	3.76 1.93	9400 4830
SX-105	7/26/95 (3)	<25	25-30	<25	1.7	<0.13	6.07	1.90	4740
SX-106	3/27/95 (3)	<98	171-188	<12	2.4	<0.39	7.64	2.51	6280
SX-107									
SX-108									
SX-109	8/1/95 (3) (Duct)	<25	16-18	<25	1.6	<0.12	5.48	2.01	5040
SX-110									
SX-111									
SX-112									
SX-113									
SX-114									
SX-115									
T-101									
T-102									
T-103									
T-104	2/7/96 (3/4)	4-17 all data not available	102-110	<4	1.9	0.12	10.78	1.40	3500
T-105									
T-106									

Table EA-8. Single-Shell Tank Calculated LFL Values. (8 sheets)

Tank	Date[1] Sampled () = Type	TYPE 2/3/4 Sample Results				Calculated Values			
		Hydrogen ppmv	Ammonia ppmv	Methane ppmv	Other Organics mg/m^3	% LFL for Tank Vapor Space	LFL for Flammable Gas Mixture	% Hydrogen @ 100% LFL	% Hydrogen @ 25% LFL
T-107	1/18/95 (3)	<94	122-127	<61	3.8	<0.44	6.42	2.14	5350
T-108									
T-109									
T-110	8/3/95 (3)	<25	108-109	<25	1.6	<0.18	8.70	1.37	3420
T-111	1/20/95 (3)	<94	225-227	<61	22.5	<0.50	7.59	1.87	4670
T-112									
T-201									
T-202									
T-203									
T-204									
TX-101									
TX-102									
TX-103									
TX-104									
TX-105	12/20/94 (3)	<99	19-21	<61	4.6	<0.38	4.73	2.58	6460
TX-106									
TX-107									
TX-108									
TX-109									
TX-110									
TX-111	10/11/95 (3)	107-110	588-638	<25	13.1	0.74	10.49	1.49	3730
TX-112									
TX-113									
TX-114									

Table EA-8. Single-Shell Tank Calculated LFL Values. (8 sheets)

Tank	Date[1] Sampled () = Type	TYPE 2/3/4 Sample Results				Calculated Values			
		Hydrogen ppmv	Ammonia ppmv	Methane ppmv	Other Organics mg/m³	% LFL for Tank Vapor Space	LFL for Flammable Gas Mixture	% Hydrogen @ 100% LFL	% Hydrogen @ 25% LFL
TX-115									
TX-116									
TX-117									
TX-118	12/16/94 (3)	96-98	31-36	<61	10.7	0.39	5.00	2.51	6280
TY-101	4/5/95 (3)	<93	15-17	<12	1.7	<0.27	4.56	3.48	8690
TY-102	4/12/96 (3)	<3.1	4.0-4.1	<4.3	3.08-4.11	<0.02	6.05	1.63	4080
TY-103	4/13/95 (3) 11/6/96 (4)	<93	47-51	<12	55.6	<0.29	5.39	3.21	8030
TY-104	4/26/95 (3)	<49	57-62	<23	2.8	<0.21	6.43	2.35	5880
TY-105									
TY-106									
U-101									
U-102									
U-103	2/15/95 (3)	552-557	720-761	<61	20.9	2.01	6.88	2.78	6940
U-104	7/16/96 (4)	no data							
U-105	2/24/95 (3)	<49	275-354	<23	7.9	<0.40	10.73	1.23	3090
U-106	2/26/95 (3)	203-214	931-1013	<61	19.1	1.31	9.83	1.63	4080
U-107	2/17/95 (3)	496-505	425-474	<12	15.4	1.59	6.22	3.17	7930
U-108	8/18/95 (3)	518-524	679-701	<25	14.5	1.81	6.90	2.89	7230
U-109	8/10/95 (3)	724-770	556-608	<25	14.4	2.37	5.93	3.25	8130
U-110									
U-111	2/20/95 (3)	244-250	671-682	<12	12.3	1.09	8.67	2.30	5740
U-112	7/9/96 (4) 12/6/96 (4)	231-233	289-326	<25	1.85-2.16	0.84	6.93	2.76	6910

Table EA-8. Single-Shell Tank Calculated LFL Values. (8 sheets)

Tank	Date[1] Sampled () = Type	TYPE 2/3/4 Sample Results				Calculated Values			
		Hydrogen ppmv	Ammonia ppmv	Methane ppmv	Other Organics mg/m^3	% LFL for Tank Vapor Space	LFL for Flammable Gas Mixture	% Hydrogen @ 100% LFL	% Hydrogen @ 25% LFL
U-201									
U-202									
U-203	8/9/95 (3)	<25	0.8-1	.25	13.4	<0.11	4.51	2.21	5520
U-204	8/7/95 (3)	<25	0.1-0.2	<25	6.5	<0.11	4.46	2.22	5550

Notes: [1]Dates are in the mm/dd/yy format.

Figure EA-1.

Percent LFL Correlation for a Gas Mixture* Relative to Pure Hydrogen and Air.

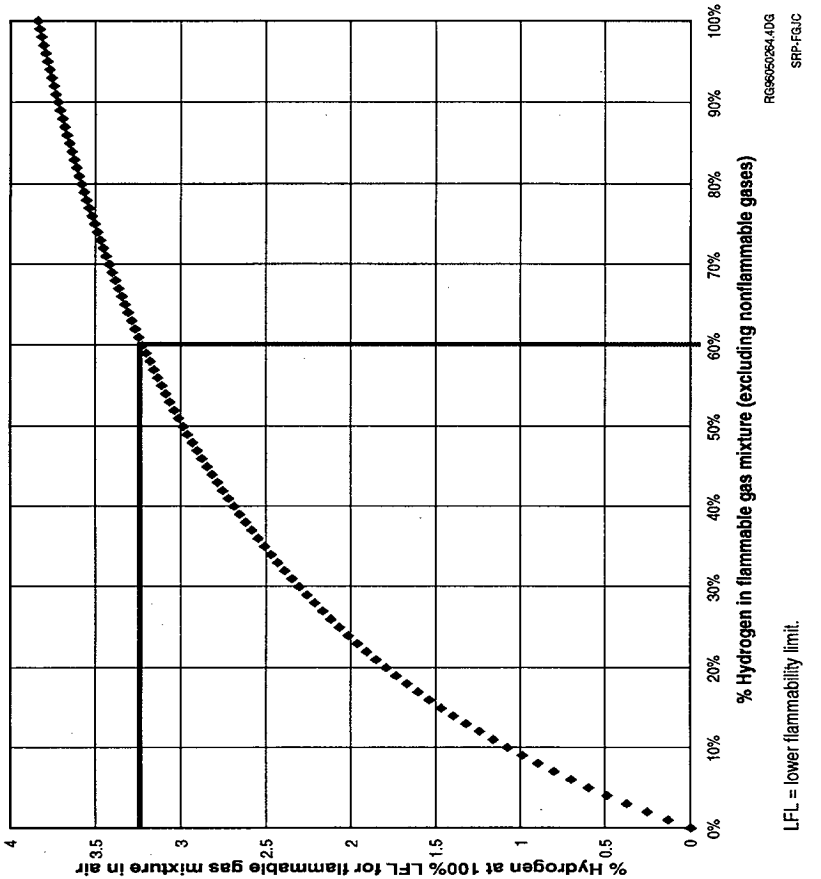

*Note: Gas Mixture is described in Section EA 2.4.4.

This page intentionally left blank.

APPENDIX EB

SAMPLE FLAMMABLE GAS CONTROLS SPECIFICATION PROCESS

This page intentionally left blank.

LIST OF TERMS

AWF	Aging Waste Facility
DCRT	double-contained receiver tank
DST	double-shell tank
FGEAB	Flammable Gas Equipment Advisory Board
GRE	gas release event
IC	ignition source control
JCO	Justification for Continued Operation
PHMC	Project Hanford Management Contract
RL	U.S. Department of Energy, Richland Operations Office
SST	single-shell tank
TWRS	Tank Waste Remediation System
USQ	Unreviewed Safety Question

This page intentionally left blank.

APPENDIX EB

SAMPLE FLAMMABLE GAS CONTROLS SPECIFICATION PROCESS

This Appendix shows a sample process that can be used to specify the allowed safe conditions and control requirements to address the flammable gas hazards as described in TF-96-0433 (USQ Tracking No.), *Consolidation of Flammable Gas/Slurry Growth Unreviewed Safety Question Issues*. The process is used by the Project Hanford Management Contractor (PHMC) to establish whether proposed activities are within the allowed conditions and requirements of the flammable gas Justification for Continued Operation (JCO) for the flammable gas hazard. This process description is not an Authorization Basis document. The process uses existing Tank Waste Remediation System (TWRS) procedures and work practices, as well as certain new work practices created as part of the flammable gas JCO. This attachment must be used in concert with the TWRS USQ procedure as found in HNF-IP-0842, *TWRS Administration*, Volume IV, Section 5.4. This process is **not** a substitute for the USQ process. The process flow is summarized in Figure EB-1 and described in the following paragraphs.

Signature to release work signifies that the process described in this appendix has been completed and that required controls are implemented.

EB1.0 APPLICABILITY

The JCO and, therefore, this process applies to work packages and operating procedures that cover activities involving any of the following locations or characteristics: ex-tank intrusive, dome space intrusive, waste intrusive, local waste disturbing, or global waste disturbing.

NOTE: If the activity or operation involves only non-intrusive locations, is not waste disturbing, and applicable ventilation requirements are met, the activity or operation does not involve the flammable gas USQ and no applicable ignition source control (IC) or monitoring JCO requirements are related to the flammable gas hazard.

EB2.0 WORK AUTHORIZATION PROCESS OVERVIEW

Comparison with Flammable Gas JCO Conditions for Safe Operation

The information in the work package or operating procedure is used to answer the following questions to establish the appropriate and required JCO controls.

[a] Is this activity or operation expressly prohibited by the JCO?

Yes ____
No ____

If YES, the Authorization Basis must be amended and specific approval by the U.S. Department of Energy, Richland Operations Office (RL) must be sought.

[b] Which JCO facility groups are affected by this activity or operation?

Facility Group 1 ____
Facility Group 2 ____
Facility Group 3 ____
Non-GRE (gas release event) ____

[c] Which regions of the affected facilities are involved in this activity or operation? NOTE: Activities and equipment may involve more than one region.

Nonintrusive ____
Ex-tank Intrusive ____
Dome Space Intrusive ____
Waste Intrusive ____
Inside Waste Intruding Equipment ____

[d] What is the nature of the activity or operation in the affected facilities?

Non-Waste Disturbing ____
Local Waste Disturbing ____
Global Waste Disturbing ____
For non-GRE facilities, this does not apply ____

NOTE: If the activity or operation involves only Nonintrusive locations and is not waste disturbing, the activity or operation does not involve the flammable gas USQ and no JCO requirements apply.

[e] Determine the ventilation requirements for the affected facilities, as specified in the JCO. (Check the applicable requirements.)

Double-Shell Tank (DST) and Aging Waste Facility (AWF) Tank Ventilation ____
Single-Shell Tank (SST) Active Ventilation ____
SST Passive Ventilation ____
Double-contained receiver tank (DCRT) Ventilation ____
244-AR, TK-002 Ventilation ____
No ventilation is required ____

Can the work activity or procedure be performed without violating the applicable requirements?

Yes ____
No ____

If NO, is there a RL-approved Authorization Basis for this activity or operation that provides alternative ventilation requirements and addresses the flammable gas hazards as described USQ TF-96-0433, Rev. 1?

Specify: _____

If YES, does this approved basis clearly apply to the affected facilities?

Yes ____
No ____ ([h] below)

[f] In light of the answers to [b], [c], and [d], which ignition source requirements apply? Go to the Ignition Source Control Evaluation Worksheet before proceeding, to determine specific requirements and compliance.) Document the requirements on an IC Evaluation Worksheet.

Are the equipment and materials (1) in compliance with the ICs, or (2) do they provide equivalent safety per the Flammable Gas Equipment Advisory Board (FGEAB) or (3) or are they exempted as listed in Table E4-4?

Yes ____
No ____

If NO, is there a RL approved Authorization Basis for this activity or operation that provides alternative ignition source requirements and addresses the flammable gas hazards as described USQ TF-96-0433, Rev. 1?:

Specify: _____

If YES, does this approved basis clearly apply to the affected facilities?

Yes ____
No ____ ([h] below)

[g] In light of the answers to [b], [c], and [d], check the applicable requirements.

Entry monitoring only ____

Continuous monitoring during manned activities ____

Continuing periodic monitoring during unmanned global waste disturbing activities in passively ventilated SSTs ____

For non-GRE facilities: monitoring before energizing equipment that does not meet ICs, when ventilation has not been verified to be adequate and operable (e.g., catch tanks) ____

Monitoring as a compensatory measure to ICs. Specify applicable monitoring requirements: _____

No monitoring is required ____

Are the monitoring requirements for the affected facilities, as specified in the JCO, contained in the operating procedure or the work package?

Yes ____
No ____

If No, is there a RL-approved Authorization Basis for this activity or operation that provides alternative monitoring requirements and addresses the flammable gas hazards as described USQ TF-96-0433, Rev. 1?:

Specify: _____

Does this approved basis clearly apply to the affected facilities?

Yes ____
No ____ ([h] below)

[h] Are all of the requirements indicated in items [e], [f], or [g] satisfied?

Yes ____ The activity or operation is within the JCO and TSRs from the perspective of the flammable gas hazard only.

No ____ The activity or operation is not permitted per the approved JCO and an amendment to the TWRS Authorization Basis is required before the activity or operation may proceed as proposed.

Ignition Source Control Evaluation Worksheet
(Sample)

Equipment, Materials, Work Practices (1)	Location (2)	Ignition Control Set (3)	IC[a] Set Met (4)	FGEAB Safety Equivalence Ruling (5)	Approved Exception (TSR AC 5.10) (6)

[a]IC = ignition source control

Example Entries:

(1) Drill String, Sampler System, Power Connection, Foot Clamp, Ventilation Fan, Level Detector, Bonding, Grounding, Carbon Steel Camera Support Column, Non-conductive Polymer Receiver Bag, etc.

(2) Nonintrusive, Ex-tank Intrusive, Dome Space Intrusive, Waste Intrusive

(3) IC Set No.1, IC Set No.2, None

(4) IC Set Met, IC Set Not Met

(5) Is Equivalent per Ref. "X"

(6) Reference appropriate item from exceptions list in Table E4-4

Figure EB-1. Flammable Gas Controls Specification Process

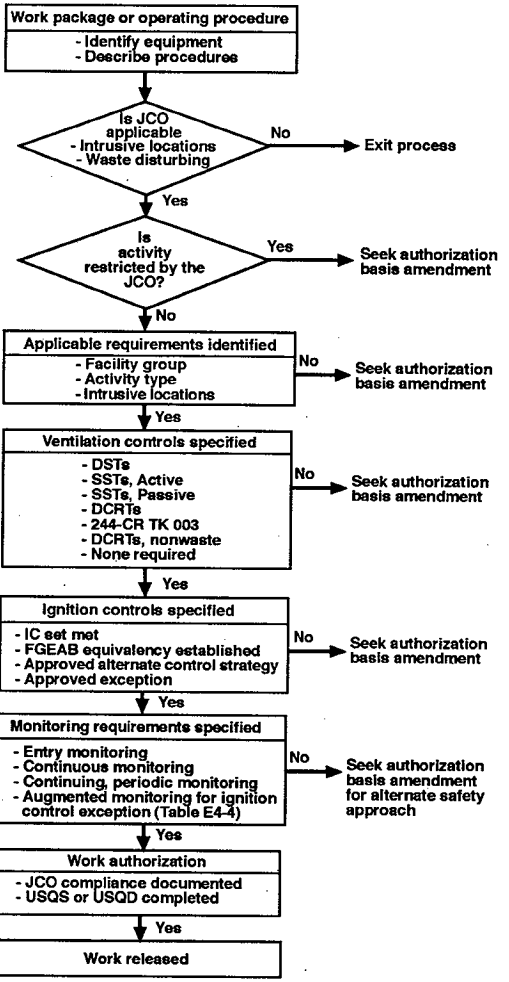

DCRT = double-contained receiver tank.
DST = double-shell tank.
FGEAB = Flammable Gas Evaluation Advisory Board
IC = Ignition control.
JCO = Justification for Continued Operation
SST = single-shell tank
USQD = Unreviewed Safety Question Determination
USQS = Unreviewed Safety Question Screening

H96110033.1b
SRP-BIO

EB3.0 REFERENCES

See Appendix E, E7.0, "REFERENCES".

This page intentionally left blank.

APPENDIX EC

EXCEPTIONS TO IGNITION SOURCE CONTROLS

This page intentionally left blank.

LIST OF TERMS

ALARA	As Low As Reasonably Achievable
CAS	Continuous Air Sampler
CGM	Combustible gas meter
FG	Facility Group
FGEAB	Flammable Gas Equipment Advisory Board
FIC	Food Instrument Corporation (level gauge)
GRE	gas release event
GWD	global waste disturbing activities
ICS	Ignition Control Set
IMUST	inactive miscellaneous underground storage tank
ISVS	in-situ vapor system
JCO	Justification for Continued Operation
LFL	Lower Flammability Limit
LOW	liquid observation wells
LWD	local waste disturbing activities
MITs	Multiple instrument trees
NFPA	National Fire Protection Association
NWD	non-waste disturbing activities
OVM	organic vapor monitor
PAM	portable alpha monitor
PMCS	push mode core sampling
PVC	polyvinyl chloride
RCT	radiological control technician
RH	relative humidity
RMCS	rotary mode core sampling
SHMS	Standard Hydrogen Monitoring System
TCR	Tank Characterization Report
VDTT	velocity-density temperature tree

This page intentionally left blank.

ITEM CLASSIFICATION: DE MINIMUS

ITEM NUMBER: 1 (page 1 of 4)

EQUIPMENT: Rubber/plastic gloves, canvas gloves. Tyvek clothing, plastic clothing

CATEGORY: Static Spark Potential

USE:

Used for protecting personnel from contamination.

APPLICABLE CONTROL NOT MET:	WHEN CONTROL NOT MET:
ICS 2 #3 (ICS 1 #3) (ignition control set)	FG 1 ex-tank FG 2 ex-tank global waste disturbing activities (GWD) FG 1,2 dome intrusive FG 3 dome intrusive (local waste disturbing activities [LWD], GWD)

DISCUSSION OF FLAMMABLE GAS JCO APPLICABILITY:

Surgeon's gloves, or other "rubber" gloves, are worn in radiation areas for personnel protection. Canvas gloves are coated with a vinyl covering when new, most of which eventually gets removed in the laundry. Gloves are worn in ex-tank regions, but occasionally might be placed minimally inside a dome intrusive area or waste intruding equipment. Tyvek clothing or plastic clothing is worn during operations with the potential for high personnel contamination. Tyvek clothing complies with the Flammable Gas Justification for Continued Operation (JCO) when grounded. This is not done at this time. Plastic clothing does not comply with the Flammable Gas JCO. Use of either of those articles of protective clothing is a significant issue with respect to personnel contamination control. These are judged to have a negligible potential for creating sparks. Finger ring use (for radiological monitoring) meets equivalence with the Flammable Gas JCO, and so finger rings are not included in the above items.

RISK ACCEPTANCE:

This is an item where worker safety must be balanced with negligible ignition source risk. Gloves are used in ex-tank locations, but may be used in a minimally dome or waste intrusive location (e.g., at the entry of a riser or liquid observation well [LOW]). Tyvek and plastic clothing is only worn in an ex-tank region. The risk of personnel contamination due to not using these gloves or clothing is unacceptable. The resulting delay to all sampling work, and most other tank intrusive work, the ability to obtain characterization data from waste tanks that is used both for helping to close safety issues and for design of privatization waste handling facilities must be balanced with the small risk of a flammable gas ignition event due to a spark from the gloves or clothing. The risk associated with continuing to use the gloves or clothing is managed by performing flammable gas monitoring, with safe shutdown controls, prior to and/or during use. This will include monitoring per method [A] as appropriate for the activity. See definition of monitoring methods at the end of this section.

The person performing the initial monitoring per [A] will be wearing rubber gloves, probably canvas gloves, and possible Tyvek or plastic clothing. It is an acceptable risk to have him perform the monitoring while wearing these items.

IMPACT OF NOT ACCEPTING RISK OF CONTINUED USE:

Facility Group 1 Tanks-Would stop all ex-tank and dome intrusive work

Facility Group 2 Tanks-Would stop all dome intrusive and some ex-tank work.

Facility Group 3 or other Tanks-Would stop all waste disturbing dome intrusive work.

REQUESTED APPROVAL FROM DOE:

Continued use when performing flammable gas monitoring controls [A] for rubber gloves, canvas gloves, and Tyvek or plastic clothing in:

1) FG 1 ex-tank regions
2) FG 1,2 tanks during dome intrusive activities.
3) FG 2 ex-tank region (GWD).
4) FG 3 tanks for dome intrusive regions (LWD, or GWD).

ITEM CLASSIFICATION: DE MINIMUS

ITEM NUMBER: 1 (page 2 of 4)

EQUIPMENT: Air respirators, air fed hoods, and breathing air hoses

CATEGORY: Static Spark Potential

USE:

Used for providing adequate breathing air.

APPLICABLE CONTROL NOT MET:	WHEN CONTROL NOT MET:
ICS 2 #3	FG 1 ex-tank FG 2 ex-tank (GWD)

DISCUSSION OF FLAMMABLE GAS JCO APPLICABILITY:

Air respirators are made from rubber and plastic. Breathing air hoses are made from rubber. These are judged to have a negligible potential for creating sparks.

RISK ACCEPTANCE:

This is an item where worker safety must be balanced with negligible ignition source risk. The risk of internal contamination or inhalation of potentially toxic vapors due to not using respirators or breathing air when needed is unacceptable. The resulting delay to sampling work, and most other tank intrusive work, the ability to obtain characterization data from waste tanks that is used both for helping to close safety issues and for design of privatization waste handling facilities must be balanced with the small risk of a flammable gas ignition event due to a spark from the respirators or hoses. The risk associated with continuing their use is managed by performing flammable gas monitoring, with safe shutdown controls, prior to and/or during use. This will include monitoring per method [A] for the activity. See definition of monitoring methods at the end of this section.

The person performing the initial monitoring per [A] may be wearing a respirator or an air hose. It is an acceptable risk to have him perform the monitoring while wearing these items.

IMPACT OF NOT ACCEPTING RISK OF CONTINUED USE:

Facility Group 1 Tanks-Would stop all ex-tank, and by default, most dome intrusive work and waste intruding equipment work.

Facility Group 2 Tanks-Would stop all ex-tank, and by default, most dome intrusive work and waste intruding equipment work during GWD.

Facility Group 3 or other Tanks-No Impact.

REQUESTED APPROVAL FROM DOE:

Continued use when performing flammable gas monitoring control [A] for respirators and breathing air hoses in:

1) FG 1 ex-tank regions
2) FG 2 ex-tank regions (GWD)

ITEM CLASSIFICATION: DE MINIMUS

ITEM NUMBER: 1 (page 3 of 4)

EQUIPMENT: Rubber/plastic footwear

CATEGORY: Static Spark Potential

USE:

Used for protecting feet from contamination.

APPLICABLE CONTROL NOT MET:	WHEN CONTROL NOT MET:
ICS 2 #3	FG 1 ex-tank FG 2 ex-tank (GWD)

DISCUSSION OF FLAMMABLE GAS JCO APPLICABILITY:

Rubber boots are worn in radiation areas for personnel protection. Rubber boots are judged to have a negligible potential for creating sparks.

RISK ACCEPTANCE:

This is an item where worker safety must be balanced with negligible ignition source risk. The risk of personnel contamination and loss of contamination control due to not using boots is unacceptable. The resulting delay to sampling work, and most other tank intrusive work, the ability to obtain characterization data from waste tanks that is used both for helping to close safety issues and for design of privatization waste handling facilities must be balanced with the small risk of a flammable gas ignition event due to a spark from the boots. The risk associated with continuing to use the boots is managed by performing flammable gas monitoring, with safe shutdown controls, prior to and/or during use. This will include monitoring per method [A] for the activity. See definition of monitoring methods at the end of this section.

The person performing the initial monitoring per [A] will be wearing rubber boots. It is an acceptable risk to have him perform the monitoring while wearing the boots.

IMPACT OF NOT ACCEPTING RISK OF CONTINUED USE:

Facility Group 1 Tanks-Would stop all ex-tank, and by default, most dome intrusive work and waste intruding equipment work.

Facility Group 2 Tanks-Would stop all ex-tank, and by default, most dome intrusive work and waste intruding equipment work during GWD.

Facility Group 3 or other Tanks-No Impact.

REQUESTED APPROVAL FROM DOE:

Continued use when performing flammable gas monitoring control [A] for rubber boots in:

1) FG 1 ex-tank regions
2) FG 2 ex-tank regions (GWD)

ITEM CLASSIFICATION: DE MINIMUS

ITEM NUMBER: 1 (page 4 of 4)

EQUIPMENT: Installation, removal or use of masking tape

CATEGORY: Static Spark Potential

USE:

Used for taping up protective clothing.

APPLICABLE CONTROL NOT MET:	WHEN CONTROL NOT MET:
ICS 2 #3	FG 1 ex-tank FG 2 ex-tank (GWD)

DISCUSSION OF FLAMMABLE GAS JCO APPLICABILITY:

Masking tape is used for taping personal protective clothing, therefore, is present in ex-tank regions. The primary spark potential is when applying or removing the tape. Applying or removing masking tape could form small static sparks under certain conditions. Taping is not normally done in an ex-tank area, but may be necessary in certain circumstances. Masking tape is judged to have a negligible potential for creating sparks.

RISK ACCEPTANCE:

This is an item where worker safety must be balanced with negligible ignition source risk. The risk of contamination due to not using masking tape is unacceptable. The resulting delay to sampling work, and most other tank intrusive work, the ability to obtain characterization data from waste tanks that is used both for helping to close safety issues and for design of privatization waste handling facilities must be balanced with the small risk of a flammable gas ignition event due to a spark from the tape. The risk associated with continuing the tape use is managed by performing flammable gas monitoring, with safe shutdown controls, prior to and/or during use. This will include monitoring per method [A] for the activity. See definition of monitoring methods at the end of this section.

The person performing the initial monitoring per [A] will be wearing masking tape. It is an acceptable risk to have him perform the monitoring while wearing the tape.

IMPACT OF NOT ACCEPTING RISK OF CONTINUED USE:

Facility Group 1 Tanks-Would stop all ex-tank, and by default, most dome intrusive work and waste intruding equipment work.

Facility Group 2 Tanks-Would stop all ex-tank, and by default, most dome intrusive work and waste intruding equipment work during GWD.

Facility Group 3 or other Tanks-No Impact.

REQUESTED APPROVAL FROM DOE:

Continued use when performing flammable gas monitoring control [A] for masking tape in:

1) FG 1 ex-tank regions
2) FG 2 ex-tank regions (GWD)

ITEM CLASSIFICATION: DE MINIMUS

ITEM NUMBER: 2

EQUIPMENT: Wearing of plastic badges, badge holders, and dosimeters.

CATEGORY: Static Spark Potential

USE:

Used for security and dosimetry.

APPLICABLE CONTROL NOT MET:	WHEN CONTROL NOT MET:
ICS 2 #3	FG 1 ex-tank FG 2 ex-tank (GWD)

DISCUSSION OF FLAMMABLE GAS JCO APPLICABILITY:

Badges and dosimeters are small, plastic items which all personnel are required to carry for security and exposure monitoring. Risk of a static spark in the above listed ex-tank regions from these items should be small, especially if they are inside another pair of protective clothing. Badges, badge holders, and dosimeters are judged to have a negligible potential for causing flammable gas ignition under the applied conditions.

RISK ACCEPTANCE:

This is an item where worker safety must be balanced with negligible ignition source risk. The risk of overexposure due to not using dosimetry, and the violation of security requirements is unacceptable. The resulting delay to sampling work, and most other tank intrusive work, the ability to obtain characterization data from waste tanks that is used both for helping to close safety issues and for design of privatization waste handling facilities must be balanced with the small risk of a flammable gas ignition event due to a spark from the items. The risk associated with continuing their use is managed by performing flammable gas monitoring, with safe shutdown controls, prior to and/or during use. This will include monitoring per method [A] for the activity. See definition of monitoring methods at the end of this section.

The person performing the initial monitoring per [A] will be wearing a badge, badge holder, and dosimetry. It is an acceptable risk to have him perform the monitoring while wearing these items.

IMPACT OF NOT ACCEPTING RISK OF CONTINUED USE:

Facility Group 1 Tanks-Would stop all ex-tank, and by default, most dome intrusive work and waste intruding equipment work.

Facility Group 2 Tanks-Would stop all ex-tank, and by default, most dome intrusive work and waste intruding equipment work during GWD.

Facility Group 3 or other Tanks-No Impact.

REQUESTED APPROVAL FROM DOE:

Continued use when performing flammable gas monitoring control [A] for badges, badge holders and dosimeters in:

1) FG 1 ex-tank work
2) FG 2 ex-tank regions (GWD)

ITEM CLASSIFICATION: DE MINIMUS

ITEM NUMBER: 3

EQUIPMENT: Installation of, removal of, working on, or extended presence of nonconductive lead blankets

CATEGORY: Static Spark Potential

USE:

Used for portable shielding.

APPLICABLE CONTROL NOT MET:	WHEN CONTROL NOT MET:
ICS 2 #3	FG 1 ex-tank FG 2 ex-tank (GWD)

DISCUSSION OF FLAMMABLE GAS JCO APPLICABILITY:

The lead blankets currently in use are constructed of a nonconductive polymer jacket surrounding a lead wool blanket. The blankets are used for shielding in the work area. This equipment may be in or outside of an ex-tank exclusion zone. There is no ignition source issue with the lead; the verbatim compliance issue is due to the plastic coating. Lead blankets are judged to have a negligible potential for creating sparks.

RISK ACCEPTANCE:

This is an item where worker safety must be balanced with negligible ignition source risk. Lead blankets are not arranged in a manner which could trap flammable gases. These blankets are normally installed and removed when ex-tank regions are not present (i.e., before a riser is opened or after it is closed). During limited instances it may be necessary to move these blankets in one of the above listed ex-tank areas. Removal is normally done after a riser is sealed. The risk of not using lead blankets would lead to higher personnel exposure if the items cannot be relocated. Failure to approve use of the lead blankets will result in considerable costs. This would restrict some work in the above listed ex-tank regions until suitable replacements, if available, were obtained. The resulting delay to sampling work and most other tank intrusive work, and the ability to obtain characterization data from waste tanks that is used both for helping to close safety issues and for design of privatization waste handling facilities must be balanced with the small risk of a flammable gas ignition event due to a spark from the blankets. The risk associated with continuing their use is managed by performing flammable gas monitoring, with safe shutdown controls, prior to and/or during use. This will include monitoring per method [A] for the activity. See definition of monitoring methods at the end of this section. This monitoring is in full compliance with the monitoring requirements referenced by U.S. Department of Energy, Richland Operations Office (RL) letter 96-WSD-283 (Wagoner 1996).

IMPACT OF NOT ACCEPTING RISK OF CONTINUED USE:

Facility Group 1 Tanks-Would stop some of ex-tank, and by default some dome intrusive work and waste intruding equipment work.

Facility Group 2 Tanks-Would stop some ex-tank, and by default most dome intrusive work and waste intruding equipment work during GWD.

Facility Group 3 or other Tanks-No Impact.

REQUESTED APPROVAL FROM DOE:

Continued use when performing flammable gas monitoring control [A] for lead blankets in:

1) FG 1 ex-tank regions
2) FG 2 ex-tank regions (GWD)

ITEM CLASSIFICATION: DE MINIMUS

ITEM NUMBER: 4

EQUIPMENT: Installation, removal, or extended presence of nonconductive adhesive tape

CATEGORY: Static Spark Potential

USE:

Used for taping plastics and other miscellaneous items.

APPLICABLE CONTROL NOT MET:	WHEN CONTROL NOT MET:
ICS 2 #3, ICS 1 #3	FG 1 ex-tank FG 2 ex-tank (GWD) FG 1,2 dome intrusive FG 3 dome intrusive (LWD, GWD) FG 1,2,3 waste intruding equipment

DISCUSSION OF FLAMMABLE GAS JCO APPLICABILITY:

Nonconductive adhesive tape is used routinely in ex-tank regions. Because of the nature of its use portions of tape will occasionally be exposed to tank vapors during sleeving, bagout or other activities, and as a result it is also included as a dome intrusive and waste intruding equipment item.

RISK ACCEPTANCE:

The minimal risk is primarily associated with tape application and removal, thus the time at risk is small. Tape is used in ex-tank locations, but may be used in a minimally dome or waste intrusive location. It is used primarily for taping down plastics for contamination control. Depending upon the location, the work to be done, and the contamination level, tape may on occasion be placed around the edge of or just inside a dome intrusive region or item of waste intruding equipment. Tape is also used when "horsetailing" out contaminated equipment from a tank. The contaminated item is brought up into a plastic sleeve, the plastic twisted around under the object, and tape wrapped around the twist. The taped area is then cut through and the waste item removed. Should the taped joint come apart, the edge of the tape could be exposed to the tank vapors. Tape is also used to seal sleeves around items such as cameras which are lowered into tank vapor spaces. In such cases the tape is in the tank dome for anywhere from a few minutes to a few days. Not using tape would lead to ceasing most activities in the above areas. The resulting delay to sampling work, and most other tank intrusive work, the ability to obtain characterization data from waste tanks that is used both for helping to close safety issues and for design of privatization waste handling facilities must be balanced with the small risk of a flammable gas ignition event due to a spark from the tape. The risk associated with continuing its use is managed by performing flammable gas monitoring, with safe shutdown controls, prior to and/or during use. This will include monitoring per method [A] or [B] applicable for the activity. See definition of monitoring methods at the end of this section.

IMPACT OF NOT ACCEPTING RISK OF CONTINUED USE:

Facility Group 1 Tanks-Would stop all sampling related activities, and most other tank intrusive work.

Facility Group 2 Tanks-Would stop all sampling related activities, and most other tank intrusive work.

Facility Group 3 or other Tanks-Would stop all core sampling, and other tank activities with waste intruding equipment.

REQUESTED APPROVAL FROM DOE:

Continued use when performing flammable gas monitoring control [A] or [B] as appropriate for use of green tape in:

1) FG 1 ex-tank regions
2) FG 2 tanks for ex-tank regions (GWD)
3) FG 1,2 dome intrusive regions
4) FG 3 tanks for dome intrusive regions (LWD, GWD)
5) FG 1,2,3 tank waste intruding equipment

ITEM CLASSIFICATION: DE MINIMUS

ITEM NUMBER: 5

EQUIPMENT: Portable Alpha Monitor (PAM)

CATEGORY: Electrical Spark Potential

USE:

Used for monitoring for alpha contamination

APPLICABLE CONTROL NOT MET:	WHEN CONTROL NOT MET:
ICS 2 #5 ICS 1 #5	FG 1 ex-tank FG 2 ex-tank (GWD) FG 1,2 dome intrusive FG 3 dome intrusive (LWD, GWD) FG 1,2,3 waste intruding equipment

DISCUSSION OF FLAMMABLE GAS JCO APPLICABILITY:

The portable alpha monitor (PAM) is battery powered. The unit is judged not in verbatim compliance with the Flammable Gas JCO. Per ICS #2: "As a minimum the equipment is non-sparking under normal operation...". While the PAM normally meets this requirement, the probe source is easily damaged and a postulated spark could occur if internal electronics were shorted out. The PAM is usually used for determining alpha contamination on smears rather than near a riser or in a waste intruding equipment item. However, sometimes it is necessary to use the PAM to determine contamination levels (fixed or smearable) on the equipment. PAMs are judged to have a negligible potential for causing flammable gas ignition.

RISK ACCEPTANCE:

This is an item where worker safety must be balanced with negligible ignition source risk. The PAM is used in ex-tank locations, but may be used in a minimally dome or waste intrusive location (e.g., at the entry of a riser or LOW). The PAM is needed for monitoring for alpha contamination. The potential problems arising from an alpha contamination spread are more severe than from a beta gamma spread. Monitoring for alpha contamination is required by the RWPs for most waste intruding or dome intrusive activities on tanks which have shown a potential for alpha contamination problems. The requirement for using alpha monitors comes in part from two letters: Caldwell, C.L., 1997, Justification for Dual Survey Exemption in 200 East Tank Farms (Interoffice Memo 771EO-97-006 to W. E. Ross, March 12), Lockheed Martin Hanford Corporation, Richland, Washington; and Dossett, S.D., 1997, Justification for Dual Survey Exemption in 200 West Tank Farms (Interoffice Memo 77B50-97-008 to J. Burton, March 17), Lockheed Martin Hanford Corporation, Richland, Washington. Per discussion with a vendor, there are no known battery powered, intrinsically safe, alternatives available for the PAMs. Furthermore, switching to a different monitor could not be made without significant delays due to required testing. PAMs are inspected frequently and checked prior to use, which minimizes the possibility of using a monitor with a failed window. The risk associated with continuing to use the PAM is managed by performing flammable gas monitoring, with safe shutdown controls, prior to and/or during use of the PAM. This will include monitoring per method [A] or [B] as appropriate for the activity. See definition of monitoring methods at the end of this section.

IMPACT OF NOT ACCEPTING RISK OF CONTINUED USE:

Facility Group 1 Tanks-Restricts radiological control technician (RCT) flexibility to monitor riser area for alpha contamination and results in lowering of radiological control and contamination problems. Failure to accept the risk of continuing to use the PAM will shut down or restrict most waste intrusive work.

Facility Group 2 Tanks-Same as above.

Facility Group 3 or other Tanks-Same as above(LWD, GWD).

REQUESTED APPROVAL FROM DOE:

Continued use when performing flammable gas monitoring controls [A] or [B] for use of PAMs in:

1) Ex-tank regions in FG 1 tanks.
2) Dome intrusive regions in FG 1,2 tanks.
3) Waste intruding equipment in FG 1,2,3 tanks.
4) Dome intrusive regions (LWD, GWD) for FG 3 tanks
5) Ex-tank regions in FG 2 tanks (GWD)

ITEM CLASSIFICATION: DE MINIMUS

ITEM NUMBER: 6

EQUIPMENT: Nonconductive poly bottle

CATEGORY: Static Spark Potential

USE:

Used for contamination control

APPLICABLE CONTROL NOT MET:	WHEN CONTROL NOT MET:
ICS 2 #3, ICS 1 #3	FG 1 ex-tank FG 1,2 dome intrusive FG 2 ex-tank (GWD)

DISCUSSION OF FLAMMABLE GAS JCO APPLICABILITY:

Nonconductive poly bottles are used in ex-tank regions, but may be used in a minimally intrusive region for washing off some equipment items by pouring the solution inside the bottle over the item and down a riser. Glass bottles could be used as a substitute, but poly bottles have been used because they are safer (non-breakable). Poly bottles are judged to have a negligible potential for creating sparks.

RISK ACCEPTANCE:

These bottles are normally used in ex-tank locations, but may be used in a minimally dome intrusive region when pouring the liquid down a riser. The amount of liquid used is small, nominally $\leq$ 1 liter. The velocity of the poured liquid is limited to gravity flow and the wetting action of the liquid on the bottle will minimize static buildup. The potential safety concern associated with breakage of a glass bottle is a greater concern than the small risk of a flammable gas ignition event due to a spark from the plastic bottle. The risk associated with continuing use of the poly bottle is managed by performing flammable gas monitoring, with safe shutdown controls, prior to and/or during use. This will include monitoring per method [A]. See definition of monitoring methods at the end of this section.

IMPACT OF NOT ACCEPTING RISK OF CONTINUED USE:

Facility Group 1 Tanks-Small impact. Would switch to glass or other container meeting Flammable Gas JCO requirements. Will be a slight increase in the personnel risk for cuts in radiation zones.

Facility Group 2 Tanks-Small impact. Would switch to glass or other container meeting Flammable Gas JCO requirements. Will be a slight increase in the personnel risk for cuts in radiation zones.

Facility Group 3 or other Tanks-No impact, except when using around/in waste intruding equipment. Would switch to glass or other container meeting Flammable Gas JCO requirements. Will be a slight increase in the personnel risk for cuts in radiation zones.

REQUESTED APPROVAL FROM DOE:

Continued use when performing flammable gas monitoring control [A] for use of nonconductive poly bottles in:

1) FG 1 ex-tank regions
2) FG 1,2 dome intrusive regions
3) FG 2 ex-tank regions(GWD)

ITEM CLASSIFICATION: DE MINIMUS

ITEM NUMBER: 7

EQUIPMENT: Zip cords

CATEGORY: Static Spark Potential

USE:

Used for taking waste level measurements.

APPLICABLE CONTROL NOT MET:	WHEN CONTROL NOT MET:
ICS 2 #3, ICS 1 #3	FG 1 ex-tank FG 1,2 dome intrusive FG 1,2,3 waste intrusive

DISCUSSION OF FLAMMABLE GAS JCO APPLICABILITY:

A zip cord is an insulated wire that is inserted into a riser and lowered down to the waste surface. Waste intruding equipment is included in this evaluation because on rare occasions it may be necessary to use a zip cord in a failed LOW or drill string. The electrical spark produced by the zip cord's contact with the waste or the metal riser is similar to that for manual tapes, which has been analyzed in WHC-SD-WM-ES-176, and is limited by the portable ohm meter used to take the reading. The current level and voltage values are orders of magnitude below the ignition curve in UL 913. Bonding of zip cords is impractical since this would interfere with their operation. Coating of the zip cords with a static reducing compound would provide little reduction in the static discharge risk, and could increase the potential for contamination or waste disposal problems. Zip cords are judged to have a negligible potential for creating sparks.

RISK ACCEPTANCE:

See risk acceptance starting on next page.

IMPACT OF NOT ACCEPTING RISK OF CONTINUED USE:

Facility Group 1 Tanks-Would shut down most sampling activities until an alternate was available, or run the risk of errors in sampling and resulting questions with Tank Characterization Reports (TCRs).

Facility Group 2 Tanks-Would shut down most sampling activities until an alternate was available, or run the risk of errors in sampling and resulting questions with TCRs.

Facility Group 3 or other Tanks-No impact, except when needed for waste intruding equipment.

REQUESTED APPROVAL FROM DOE:

Continued use when performing flammable gas monitoring controls [A] or [B] as applicable for use of nonconductive coated zip cords in:

1) FG 1 ex-tank regions
1) FG 1,2 dome intrusive regions
2) Waste intruding equipment (such as failed LOWs) in FG 1,2,3 tanks

Risk Acceptance for Zip Cords.

The distance between a specific riser and the waste surface is required for many waste intrusive jobs such as leak detection, sampling, level gauge installations/repairs or tank equipment installations. Zip cords have been shown to be an inexpensive and easy means of detecting the waste level in tanks. Alternate non tank intrusive measurement systems have been evaluated and determined to be cost prohibitive and substantially more complex.

The relative humidity (RH) has been measured at >50% in 95% of the non-exhausted tanks sampled. The remaining 5% of the non exhausted tanks all measured between 40 to 50% RH. The SX Farm exhausted tanks measured between 20 to 40% RH, except one tank which was 65% RH. Tank 241-C-105 measured between 40 to 60% RH, and 241-C-106 measured between 50 to 100% RH. Therefore, for non-exhausted tanks, plastic coated zip cords in dome intrusive regions are expected to be in compliance with the Flammable Gas JCO about 95% of the time. For exhausted tanks, 241-C-105 and 241-C-106 are approximately 50% RH. Most double shell tanks would be expected to be the same due to the liquid or moist solid surfaces. For waste intruding equipment, waste gases will be at 100% RH because the gases come from waste pockets surrounded by liquid waste. In such pockets the water vapor in the gas would be at equilibrium with the water in the liquid. The gas in waste intruding equipment may be partially mixed with tank vapors depending upon the work being done but, as most tank vapors have a high RH, the RH of the mixed vapors in waste intruding equipment is expected to be >50%.

Most sampling would have to be shut down without the use of zip cords. The resulting delay to sampling work, and some other tank intrusive work, the ability to double check questionable ENRAF, manual tape or Food Instrument Corporation (FIC) readings, and the ability to obtain characterization data from waste tanks that is used both for helping to close safety issues and for design of privatization waste handling facilities must be balanced with the small risk of a flammable gas ignition event due to a spark from the zip cord. The risk associated with continuing use of the zip cords is managed by performing flammable gas monitoring, with safe shutdown controls, prior to and/or during use. This will include monitoring per method [A] or [B] as applicable. See definition of monitoring methods at the end of this section.

ITEM CLASSIFICATION: DE MINIMUS

ITEM NUMBER: 8

EQUIPMENT: Nonconductive plastic ropes

CATEGORY: Static Spark Potential

USE:

Used for tieing tools used around open risers or miscellaneous purposes.

APPLICABLE CONTROL NOT MET:	WHEN CONTROL NOT MET:
ICS 2 #3, ICS 1 #3	FG 1 ex-tank FG 2 ex-tank (GWD)

DISCUSSION OF FLAMMABLE GAS JCO APPLICABILITY:

Nonconductive plastic rope is used as lanyards for tools around open risers and other miscellaneous needs. Plastic rope is judged to have a negligible potential for causing flammable gas ignition under the applied conditions.

RISK ACCEPTANCE:

Nonconductive plastic rope is used for a variety of applications in addition to restraining tools. If nonconductive plastic rope cannot be used, manila rope can be used as an alternative. However, manila rope is not as strong and can weaken with time when exposed to the elements. Contaminated plastic rope can be wiped down easier. Plastic rope has proven to be more effective and less expensive for general use in tank farms and is used in ex-tank regions. Normal use of nonconductive plastic ropes does not involve activities that would build up a significant static charge.

The use of plastic rope is advantageous for operations. The inability to use this rope is a significant concern due to increased personnel and clothing contamination potential than the minimal risk of a flammable gas ignition event due to a spark from the plastic rope. The risk associated with continuing use of the rope is managed by performing flammable gas monitoring, with safe shutdown controls, prior to and/or during use. This will include monitoring per method [A]. See definition of monitoring methods at the end of this section.

IMPACT OF NOT ACCEPTING RISK OF CONTINUED USE:

Facility Group 1 Tanks-Minor impact, would switch to manila or similar rope, would increase potential for personnel contamination.

Facility Group 2 Tanks-Minor impact, would switch to manila or similar rope, would increase potential for personnel contamination.

Facility Group 3 or other Tanks-No impact, except when using around/in waste intruding equipment, would switch to manila or similar rope, would increase potential for personnel contamination.

REQUESTED APPROVAL FROM DOE:

Continued use when performing flammable gas monitoring control [A] for use of nonconductive plastic rope in:

1) FG 1 ex-tank regions
2) FG 2 ex-tank regions (GWD)

ITEM CLASSIFICATION: DE MINIMUS

ITEM NUMBER: 9

EQUIPMENT: Nonconductive plastic tubing

CATEGORY: Static Spark Potential

USE:

Used for purge lines or miscellaneous purposes.

APPLICABLE CONTROL NOT MET:	WHEN CONTROL NOT MET:
ICS 2 #3, ICS 1 #3	FG 1 ex-tank FG 1,2 dome intrusive FG 2 ex-tank (GWD)

DISCUSSION OF FLAMMABLE GAS JCO APPLICABILITY:

Nonconductive plastic tubing is used for miscellaneous needs, including temporary gas purge lines, vent and balance testing and aerosol testing of filters, temporary drain lines and temporary instrument lines during calibration or operation. Nonconductive plastic tubing is judged to have a negligible potential for causing flammable gas ignition under the applied conditions. Nonconductive plastic tubing shall not be used below the plane of a riser.

RISK ACCEPTANCE:

Nonconductive plastic tubing is used as described above in ex-tank areas. The nonconductive plastic tubing is also considered to be used in dome intrusive activities because it is connected to fittings which are in communication with the dome vapor space. During use, it is normally immobile. Static charge due to friction is minimized during insertion or removal. If nonconductive plastic tubing cannot be used, the only alternatives are rigid tubing or the wire wrapped tubing used during CGM sampling. Rigid tubing use is undesirable due to the extra cost and time for installation and waste disposal. Wire wrapped tubing is more expensive than nonconductive plastic tubing and is primarily available in a few specific lengths. The costs associated with these alternatives are a greater concern than the small risk of a flammable gas ignition event due to a spark from the plastic tubing. The risk associated with continuing to use this tubing is managed by performing flammable gas monitoring, with safe shutdown controls, prior to and/or during use. This will include monitoring per method [A] as applicable for the activity at the time the tubing is used. See definition of monitoring methods at the end of this section.

IMPACT OF NOT ACCEPTING RISK OF CONTINUED USE:

Facility Group 1 Tanks-Moderate impact due to occasional work delays. Would switch to alternate higher cost (in both time and money) tubing now available.

Facility Group 2 Tanks-Moderate impact due to occasional work delays. Would switch to alternate higher cost (in both time and money) tubing now available.

Facility Group 3 or other Tanks-No impact.

REQUESTED APPROVAL FROM DOE:

Continued use when performing flammable gas monitoring control [A] as appropriate for nonconductive plastic tubing in:

1) FG 1 ex-tank regions
2) FG 1,2 dome intrusive regions
3) FG 2 ex-tank regions (GWD)

ITEM CLASSIFICATION: DE MINIMUS

ITEM NUMBER: 10

EQUIPMENT: Installation and removal of Garlock gaskets

CATEGORY: Static Spark Potential

USE:

Used for sealing riser flanges to risers.

APPLICABLE CONTROL NOT MET:	WHEN CONTROL NOT MET:
ICS 2 #3	FG 1 ex-tank

DISCUSSION OF FLAMMABLE GAS JCO APPLICABILITY:

Garlock gaskets are used for sealing riser flanges to risers. Garlock gaskets are a replacement for asbestos gaskets, which are no longer used for reasons related to worker safety and asbestos abatement. Ex-tank use for gaskets in Facility Group 1 tanks is included to avoid confusion because the gaskets are handled in an ex-tank area prior to installation. Garlock gasket installation and removal is judged to have a negligible potential for causing flammable gas ignition under the applied conditions.

RISK ACCEPTANCE:

Garlock gaskets are a replacement for asbestos gaskets, which are no longer used for reasons related to worker safety and asbestos abatement. They have been installed on hundreds of risers in recent years. The barrier provided by the gaskets is needed to seal the risers. Using other materials is undesirable from an environmental standpoint. The gaskets are sandwiched between two steel flanges during use, with only a small portion of the gasket (less than 1/8 inch) open to the vapor space. There is no process which would be expected to build up a static charge on the gaskets. The installed orientation of the gasket and flanges is such that a static charge would not be retained. Therefore, the risk associated with Garlock gaskets is strictly confined to installation and removal. Since installation and removal tasks are of a short duration, the actual time at risk is small.

The problems with using alternative gaskets are a more significant concern than the low risk of a flammable gas ignition event due to a spark from a gasket. The risk associated with continuing use of the gaskets is managed by performing flammable gas monitoring, with safe shutdown controls, prior to and/or during installation. This will include monitoring per method [A]. See definition of monitoring methods at the end of this section.

IMPACT OF NOT ACCEPTING RISK OF CONTINUED USE:

Facility Group 1 Tanks-There is no reasonably available gasket material which has equivalent performance for worker safety and contamination control.

Facility Group 2 Tanks-No Impact.

Facility Group 3 or other Tanks-No Impact.

REQUESTED APPROVAL FROM DOE:

Continued use when performing flammable gas monitoring control [A] for installation and removal of Garlock gaskets in tanks without flammable gas monitoring or response actions in:

1) FG 1 ex-tank regions

ITEM CLASSIFICATION: DE MINIMUS

ITEM NUMBER: 11

EQUIPMENT: Nonconductive plastic garden type sprayer

CATEGORY: Static Spark Potential

USE:

Used for contamination control.

APPLICABLE CONTROL NOT MET:	WHEN CONTROL NOT MET:
ICS 2 #3	FG 1 ex-tank FG 2 ex-tank (GWD)

DISCUSSION OF FLAMMABLE GAS JCO APPLICABILITY:

The garden sprayer is a commercial unit containing less than 5 gallons of liquid. It is hand pumped and is used in Tank Farms for localized wetting and contamination control. The non-sparking brass end may enter dome intrusive regions, but the container and wand are located outside, or in ex-tank regions only. The garden type sprayer is judged to have a negligible potential for causing flammable gas ignition under the applied conditions.

RISK ACCEPTANCE:

The sprayer has proven to be an inexpensive, easy to use, flexible tool for use in tank farms. Static buildup on the sprayer tip from the water spray is believed to be minimal. The nozzle velocity is limited by the air pressure that can be generated by hand pumping. The sprayer is used for less than a minute at a time. The risk associated with continued use of the sprayer is managed by performing flammable gas monitoring, with safe shutdown controls, prior to and/or during use. This will include monitoring per method [A]. See definition of monitoring methods at the end of this section.

IMPACT OF NOT ACCEPTING RISK OF CONTINUED USE:

Facility Group 1 Tanks-Minor impact, would switch to stainless steel sprayer.

Facility Group 2 Tanks-Negligible impact.

Facility Group 3 or other Tanks-No impact.

REQUESTED APPROVAL FROM DOE:

Continued use when performing flammable gas monitoring control [A] for use of nonconductive plastic sprayer in:

1) FG 1 ex-tank regions
2) FG 2 ex-tank regions (GWD)

ITEM CLASSIFICATION: DE MINIMUS

ITEM NUMBER: 12

EQUIPMENT: Use of grab sample cap, sampling and sludge weight retrieval device, and coated steel cable.

CATEGORY: Static Spark Potential

USE:

Used for obtaining grab samples and sludge weight retrieval.

APPLICABLE CONTROL NOT MET:	WHEN CONTROL NOT MET:
ICS 2 #3	FG 1 ex-tank FG 1,2 dome intrusive FG 3 dome intrusive (LWD, GWD)

DISCUSSION OF FLAMMABLE GAS JCO APPLICABILITY:

The grab sample bottle is glass and is held in a stainless steel holder assembly. The grab sampler meets the Flammable Gas JCO and is not included in this exception request. The sample bottle cap is a small plastic item. The cable holding the stainless steel holder assembly is steel covered with a plastic coating to allow decontamination. The grab sample and sludge weight retrieval device includes a piece of PVC pipe with a PVC cap on the top and open on the bottom. This PVC enclosure has a metallic crank used to withdraw the stainless steel holder assembly up from the tank using the plastic coated steel cable. The PVC enclosure sits over the sampling riser. The retrieval device is usually outside the glove bag and therefore not in an ex-tank region. However, depending upon the riser arrangement it may be necessary to place part of the retrieval device inside the glove bag, which would then make it in an ex-tank or dome intrusive region. These grab sampling and sludge weight removal items are judged to have a minimal potential for causing flammable gas ignition under the applied conditions.

RISK ACCEPTANCE:

See risk acceptance writeup starting on next page.

IMPACT OF NOT ACCEPTING RISK OF CONTINUED USE:

Facility Group 1 Tanks-Would halt grab sampling or sludge weight removal until alternate items were available, or would have to accept significant personnel exposure and contamination.

Facility Group 2 Tanks-Would halt grab sampling or sludge weight removal until alternate items were available, or would have to accept significant personnel exposure and contamination.

Facility Group 3 or other Tanks-Would halt grab sampling or sludge weight removal until alternate items were available, or would have to accept significant personnel exposure and contamination.

REQUESTED APPROVAL FROM DOE:

Continued use of the listed equipment when performing flammable gas monitoring control [A] for above items:

1) FG 1 ex-tank regions
2) FG 1,2 tanks dome intrusive regions
3) FG 3 tanks for dome intrusive regions (LWD, GWD).

Risk Acceptance for Grab Sample Items.

The cap is a negligible source of static discharge. The RH has been measured at >50% in 95% of the non-exhausted tanks sampled. The remaining 5% of the non-exhausted tanks all measured between 40 to 50% RH. The SX Farm exhausted tanks measured between 20 to 40% RH, except one tank which was 65% RH.

Tank 241-C-105 measured between 40 to 60% RH, and Tank 241-C-106 measured between 50 to 100% RH. Therefore, for non-exhausted tanks, use of the cable and enclosure in dome intrusive regions is expected to be in compliance with the Flammable Gas JCO about 95% of the time. Exhausted Tanks 241-C-105 and 241-C-106 are approximately 50% RH. Most double-shell tanks would be expected to be the same due to the liquid or moist solid surfaces.

Not using the coated cable would lead to a significant increase in personnel exposure and contamination. The static buildup resulting from the cable rubbing against the inside of the PVC riser adapter is judged to have minimal risk for causing flammable gas ignition under the applied conditions. Not only is the humidity above 50% much of the time, the cable is inserted/retrieved slowly and the whole insertion or removal step only takes a few minutes. Not using the retrieval device would result in more personnel exposure. The impact of halting waste transfers and characterization from halting grab sampling must be balanced against the low risk of a flammable gas ignition event due to a spark from these items. The risk associated with continued use of the items is managed by performing flammable gas monitoring, with safe shutdown controls, prior to and/or during use. This will include monitoring per method [A]. See definition of monitoring methods at the end of this section.

ITEM CLASSIFICATION: DE MINIMUS

ITEM NUMBER: 13, 14

EQUIPMENT: Installation, removal, and presence of PVC liners for manual tapes and FICs

CATEGORY: Static Spark Potential

USE:

Used for keeping metal tapes from grounding out against the insides of risers.

APPLICABLE CONTROL NOT MET:	WHEN CONTROL NOT MET:
ICS 2 #3	FG 1,2, dome intrusive FG 3 dome intrusive (LWD, GWD)

DISCUSSION OF FLAMMABLE GAS JCO APPLICABILITY:

The PVC liners are present on most single-shell and double-shell tanks with manual tapes or FICs, to prevent the metal tapes from making contact with the riser wall. Removal and replacement of these liners is done occasionally. Approximately four times in the past, a manual tape or FIC has been removed to permit sampling when another riser was not available. To date, this has been done to allow push mode core sampling (PMCS), which would result in a steel pipe being inserted into the riser. Grab sampling has been done at least once in the last three years through a liner.

RISK ACCEPTANCE:

The RH has been measured at >50% in 95% of the non-exhausted tanks sampled. The remaining 5% of the non-exhausted tanks all measured between 40 to 50% RH. The SX Farm exhausted tanks measured between 20 to 40% RH, except one tank which was 65% RH. Tank 241-C-105 measured between 40 to 60% RH, and Tank 241-C-106 measured between 50 to 100% RH. Therefore, for non-exhausted tanks, use of the cable and enclosure in dome intrusive regions is expected to be in compliance with the Flammable Gas JCO about 95% of the time. Exhausted Tanks 241-C-105 and 241-C-106 are approximately 50% RH. Most double-shell tanks would be expected to be the same due to the liquid or moist solid surfaces.

The PVC liners are already installed in the tanks. The cost in labor, time, waste disposal, and personnel exposure to remove them is a more significant concern than the small risk of a flammable gas ignition event due to a spark from a liner. The risk associated with continued use of the liners is managed by performing flammable gas monitoring, with safe shutdown controls, prior to and/or during installation. This will include monitoring per method [A]. See definition of monitoring methods at the end of this section.

Core sampling is seldom performed through a riser liner, and rarely for grab sampling. During grab sampling, the plastic coated steel cable would be raised and lowered while in occasional contact with the riser liner. This does not pose a significant static buildup hazard. Flammable gas monitoring is done while taking the sample and the discussion above on the tank humidity levels applies.

No monitoring for flammable gas is done for the routine presence of the PVC liners in a tank vapor space. It is an acceptable risk to have the liners installed in the tanks without monitoring for flammable gases during their presence.

IMPACT OF NOT ACCEPTING RISK OF CONTINUED USE:

Facility Group 1 Tanks-Almost all the tanks would be out of compliance, and the risk of removing the liners is far greater from cost and As Low As Reasonably Achievable (ALARA) standpoints, than the risk involved with leaving them in place.

Facility Group 2 Tanks-Same as for FG 1 tanks.

Facility Group 3 or other Tanks-Same as for FG 1 tanks.

REQUESTED APPROVAL FROM DOE:

Continued use when performing flammable gas monitoring control [A] for installation or removal of PVC riser liners, and their extended presence in tanks without flammable gas monitoring in:

1) FG 1,2,3 dome intrusive regions

ITEM CLASSIFICATION: DE MINIMUS

ITEM NUMBER: 15, 16

EQUIPMENT: Manual Tapes

CATEGORY: Static Spark Potential

USE:

Used for measuring waste level surfaces.

APPLICABLE CONTROL NOT MET:	WHEN CONTROL NOT MET:
ICS 2 #2	FG 1,2 dome intrusive FG 3 dome intrusive (LWD, GWD)

DISCUSSION OF FLAMMABLE GAS JCO APPLICABILITY:

The electrical spark produced by the manual tape contact with the waste has been evaluated in WHC-SD-WM-ES-176, and is limited by the portable ohm meter used to take the reading. The current and voltage values are orders of magnitude below the ignition curve in UL 913. The manual tapes are not bonded to the tank, which could be interpreted as being required by the ICS 2 control #2 in the Flammable Gas JCO. These tapes will not function if bonded to the tank. Manual tapes are judged to have a negligible potential for causing flammable gas ignition under the applied conditions.

RISK ACCEPTANCE:

The metal tapes used for the manual tape level gauges represent a small potential static discharge source. If the manual tape acquired a static charge, it would dissipate over time. If a portable ohm meter is connected to the manual tape when it held a charge, it would be dissipated through the meter circuitry to ground. Any spark at the time of connection would be outside the controlled area. The loss of manual tapes for determining waste levels to detect leaks to the environment is greater than the small risk of a flammable gas ignition event due to a spark from a tape. The risk associated with continuing use of the tapes is managed by performing flammable gas monitoring, with safe shutdown controls, prior to and/or during installation and removal. This includes monitoring per method [A]. See definition of monitoring methods at the end of this section.

Monitoring is not an appropriate control for the presence of the manual tapes in a tank vapor space as no response actions are available. Per the above discussion, it is an acceptable risk to have the manual tapes installed in the tanks without monitoring for flammable gases during their presence.

IMPACT OF NOT ACCEPTING RISK OF CONTINUED USE:

Facility Group 1 Tanks-All tanks would be out of compliance and the risk of removing the tapes is far greater from cost, ALARA, and lack of level monitoring standpoints, than the risk involved with leaving them in place.

Facility Group 2 Tanks-Almost all tanks would be out of compliance and the risk of removing the tapes is far greater from cost, ALARA, and lack of level monitoring standpoints than the risk involved with leaving them in place.

Facility Group 3 or other Tanks-Same as for FG 2 tanks.

REQUESTED APPROVAL FROM DOE:

Continued use when performing flammable gas monitoring control [A] for installation or removal of manual tapes in:

1) FG 1,2 dome intrusive regions

Continued extended presence of manual tapes without flammable gas monitoring in:

2) FG 1,2,3 dome intrusive regions

ITEM CLASSIFICATION: DE MINIMUS

ITEM NUMBER: 17

EQUIPMENT: Core Sampling Equipment-Installation, use, removal, or extended presence of Pipe Wiper (Frisbee), Rainer Rubber #R2325 (Truck 1), H-2-821457 (Trucks 2 and 3)

CATEGORY: Static Spark Potential

USE:

Used for sealing around drill string during core sampling.

APPLICABLE CONTROL NOT MET:	WHEN CONTROL NOT MET:
ICS 2 #3	FG 1,2 dome intrusive FG 3 dome intrusive (LWD)

DISCUSSION OF FLAMMABLE GAS JCO APPLICABILITY:

The frisbee is a rubber disc approximately nine inches in diameter and is located at the top of a riser during core sampling. It is used to provide a seal around the drill string between the tank vapor space and the area outside the tank. About a two inch annular area of the frisbee is exposed to the tank vapor space. Frisbees have a negligible potential for causing a flammable gas ignition under the applied conditions. The FGEAB reviewed the use of the frisbee and determined that the frisbee met equivalence with the Flammable Gas JCO because of the lubricant used to wet it down prior to insertion of the drill string. The frisbee is still included in this exception because it cannot be guaranteed that the lubricant will remain present should the drill string be in place for an extended period of time with no sampling activity ongoing.

RISK ACCEPTANCE:

WHC-SD-WM-SAD-035 Rev 0-b for rotary mode core sampling (RMCS) in flammable gas single-shell tanks concluded the use of the frisbee was acceptable for RMCS in flammable gas tanks. The conclusion from this document cannot be directly applied to PMCS. However, the continued risk of using the frisbee is low. Not using the current frisbee would cease all PMCS and retained gas sampling.

The frisbee design cannot be readily changed. The frisbee was tested at the Bureau of Mines and must stay the same configuration for RMCS unless a new design is tested. The resulting delay to sampling work and the ability to obtain characterization data from waste tanks that is used for both helping to close safety issues and for design of privatization waste handling facilities must be balanced with the small risk of a flammable gas ignition event due to a spark from the frisbee. The risk associated with continuing its use is managed by performing flammable gas monitoring, with safe shutdown controls, prior to and/or during use. This will include monitoring per method [A] as applicable for the core sampling step being performed. See definition of monitoring methods at the end of this section.

IMPACT OF NOT ACCEPTING RISK OF CONTINUED USE:

Facility Group 1 Tanks-Would stop all PMCS and retained gas sampling.

Facility Group 2 Tanks-Would stop all PMCS and retained gas sampling.

Facility Group 3 or other Tanks-Would stop all PMCS and retained gas sampling.

REQUESTED APPROVAL FROM DOE:

Continued use when performing flammable gas monitoring control [A] as appropriate for use of the core sampling frisbee in:

1) FG 1,2 dome intrusive regions
2) FG 3 tanks dome intrusive regions (LWD)

ITEM CLASSIFICATION: DE MINIMUS

ITEM NUMBER: 18

EQUIPMENT: Core Sampling Equipment-Installation, removal, and use of plastic cam-lock caps.

CATEGORY: Static Spark Potential

USE:

Used for capping the quill rod when disconnected from the drill string

APPLICABLE CONTROL NOT MET:	WHEN CONTROL NOT MET:
ICS 2 #3	FG 1,2 dome intrusive

DISCUSSION OF FLAMMABLE GAS JCO APPLICABILITY:

Cam-lock caps are placed on the bottom of the quill rod when it is disconnected from the drill string for contamination control. The cam-lock caps in use are constructed of nonconductive polymer material. The quill rod is not connected to the tank when the cam-lock cap is in place, but the quill rod could be vented back to the tank vapor space. Based upon the definitions in the Flammable Gas JCO, this could be interpreted as dome intrusive work. Plastic cam-lock caps are judged to have a negligible potential for causing a flammable gas ignition under the applied conditions.

RISK ACCEPTANCE:

This is an item where worker safety must be balanced with negligible ignition source risk. Not using the caps would cease all PMCS and retained gas sampling. Steel caps were previously used, but were eliminated because they were a personnel safety hazard. Installation and removal of the caps is normally done at arm's length to minimize personnel exposure or contamination. The cap is held out and slowly raised up onto the quill rod and the cam-lock handles on the adapter moved to hold the cap in place. Handling of the heavy steel caps was difficult at arm's length, so the plastic caps were implemented. This has improved operations around the truck. In use, the caps are motionless. Thus, there is no mechanism for static charge buildup. Elimination of the plastic caps is not warranted from a cost, schedule, and worker safety standpoint, and is a more significant concern than the small risk of a flammable gas ignition event due to a spark from the plastic caps. The risk associated with continuing their use is managed by performing flammable gas monitoring, with safe shutdown controls, prior to and/or during use. This will include monitoring per method [A] as applicable for the core sampling step being performed. See definition of monitoring methods at the end of this section.

IMPACT OF NOT ACCEPTING RISK OF CONTINUED USE:

Facility Group 1 Tanks-Would delay PMCS and retained gas sampling until different caps were obtained; increased personnel safety hazard.

Facility Group 2 Tanks-Would delay PMCS and retained gas sampling until different caps were obtained; increased personnel safety hazard.

Facility Group 3 or other Tanks-No Impact.

REQUESTED APPROVAL FROM DOE:

Continued use when performing flammable gas monitoring control [A] as appropriate for use of plastic cam-lock caps in:

1) FG 1,2 dome intrusive regions (non-waste disturbing [NWD])

ITEM CLASSIFICATION: DE MINIMUS

ITEM NUMBER: 19

EQUIPMENT: Presence of extension cords

CATEGORY: Static Spark Potential

USE:

Used for providing power to electrical equipment.

APPLICABLE CONTROL NOT MET:	WHEN CONTROL NOT MET:
ICS 2 #5	FG 1 ex-tank FG 2 ex-tank (GWD)

DISCUSSION OF FLAMMABLE GAS JCO APPLICABILITY:

Electrical cords are used in some ex-tank regions. The cords meet equivalence with the Flammable Gas JCO from an electrical spark potential as long as power connections or disconnections are accomplished outside the area or when the ex-tank area does not exist. There is a negligible risk of a static spark potential from the plastic or rubber coated extension cords.

RISK ACCEPTANCE:

Continued use of this equipment will permit activities to continue that require temporary service electrical power to an ex-tank region. Calibration or maintenance of Technical Safety Requirements and Operating Specification Documents required instruments, Standard Hydrogen Monitoring System (SHMS) cabinets, leak detectors or other instruments is a more significant concern than the negligible risk of a flammable gas ignition event due to a static spark from one of these items. The risk associated with continuing to use the cords is managed by performing flammable gas monitoring, with safe shutdown controls, prior to installation and during use when personnel are present. This will include monitoring per method [A]. See definition of monitoring methods at the end of this section.

IMPACT OF NOT ACCEPTING RISK OF CONTINUED USE:

Facility Group 1 Tanks-Will shut down a moderate amount of ex-tank region work.

Facility Group 2 Tanks-Same as above, except only during GWD.

Facility Group 3 or other Tanks-No Impact.

REQUESTED APPROVAL FROM DOE:

Continued use when performing flammable gas monitoring control [A] for the presence of electrical cords in:

1) FG 1 ex-tank regions
2) FG 2 ex-tank regions (GWD)

ITEM CLASSIFICATION: DE MINIMUS

ITEM NUMBER: 20

EQUIPMENT: Closed Pit Work Related Equipment-Installation, Use and Removal of Low and High Pressure Pit Spray Whirlie and Operation of Valve Handles

CATEGORY: Mechanical Spark Potential

USE:

Used for washing down pits and operating valves in pits.

APPLICABLE CONTROL NOT MET:	WHEN CONTROL NOT MET:
ICS 2 #1	FG 1 ex-tank FG 2 ex-tank (GWD) FG 1 dome intrusive FG 2 dome intrusive FG 3 dome intrusive (LWD, GWD)

DISCUSSION OF FLAMMABLE GAS JCO APPLICABILITY:

The subject tools and equipment are normally made of carbon steel and were not procured to meet non-sparking criteria. The valve handle is used for operating valves in pits through holes in the cover blocks. The spray whirlie is inserted through an opening in the cover block and sprays solutions inside the pit for decontamination or temporarily fixing loose contamination. Most usage will be ex-tank related, but it may be required to use a valve handle or the whirlie in a pit during a time when it is designated as dome intrusive.

RISK ACCEPTANCE:

Valve handle operation has been evaluated to be low risk with regards to spark initiation. This is due to the low energies and small ranges of motion involved. The whirlie operation creates a high humidity environment within the pit which is not conducive to spark generation. Furthermore, these tools are either; a) not readily or economically available in a spark resistant version, or b) are only rarely used in areas requiring compliance with the Flammable Gas JCO controls, hence, the time at risk is low. The need to use these tools is a more significant concern than the small risk of a flammable gas ignition event due to a spark from one of them. The risk associated with continuing to use these tools and equipment is managed by performing flammable gas monitoring, with safe shutdown controls, prior to and/or during the work. The monitoring used is method [A] as appropriate. See definition of monitoring methods at the end of this section.

IMPACT OF NOT ACCEPTING RISK OF CONTINUED USE:

Facility Group 1 Tanks-Will significantly increase contamination and exposure, and shut down all pit work and a minor amount of other ex-tank work until alternate equipment or means of isolating from the tank can be established. Will halt installation of most new equipment items into the tank.

Facility Group 2 Tanks-Will significantly restrict or shut down pit work during dome intrusive activities until alternate tools or means of isolating from the tank can be established. Will halt installation of most new equipment items into the pit. Will affect most all transfers. Will significantly increase exposure and spread of contamination.

Facility Group 3 or other Tanks-Will halt some transfers. Will significantly increase exposure and spread of contamination.

REQUESTED APPROVAL FROM DOE:

Continued use when performing flammable gas monitoring controls [A] as appropriate for the above equipment:

1) FG 1 tank ex-tank regions.
2) FG 1 tank dome intrusive regions
3) FG 1 and 2 tanks dome intrusive regions (LWD, GWD).
4) FG 2 ex-tank regions GWD

ITEM CLASSIFICATION: DE MINIMUS

ITEM NUMBER: 21

EQUIPMENT: Fittings on openings less than or equal to 2.54 cm (1 in) inside diameter located on the boundary of intrusive locations.

CATEGORY: Static Spark Potential

USE:

Used for sealing tank ventilation system access points and fitting on instrument lines.

APPLICABLE CONTROL NOT MET:	WHEN CONTROL NOT MET:
ICS 2 #2	During fitting removal during entry into intrusive locations and final installation upon exiting intrusive locations

DISCUSSION OF FLAMMABLE GAS JCO APPLICABILITY:

Electrically conductive objects are bonded as per NFPA 77 (1993) during intrusive work, except removal and installation of fittings on lines that are less than 2.54-cm (1-in) in diameter. The 2.54-cm (1-in) diameter line is chosen to exclude most instrument tubing or small piping from bonding, but to include all gasketed flanges. This is justified because bonding is done to minimize static electrical buildup and discharge. The potential for static buildup on a screwed fittings is minimal as a resistance of less than 1 megohm (required by NFPA 77 (1993) for static bonding) between the nut and the tubing is realistic for small screwed fitting in the service seen in tanks farms. Any static charge buildup that might occur while the fitting is off will be discharged by touching the fitting against a ground point prior to installation.

RISK ACCEPTANCE:

Monitoring is not an appropriate control for removal of small fittings during intrusive location entry as the monitoring activity requires the availability of an intrusive location access point, which required the removal of a fitting. Per the above discussion, it is an acceptable risk to remove and install small fittings without bonding or monitoring for flammable gases during the entry and final fitting installation portion of an activity.

IMPACT OF NOT ACCEPTING RISK OF CONTINUED USE:

All facilities within the scope of this JCO - Require additional bonding, grounding, and monitoring steps in work packages and procedures that remove or install these fittings.

REQUESTED APPROVAL FROM DOE:

Continued practice of removing and installing small fitting without bonding or monitoring in:

1) Entry into intrusive locations
2) Fitting installation during exiting from intrusive locations

ITEM CLASSIFICATION: NON DE MINIMUS

ITEM NUMBER: 22

EQUIPMENT: Use of Type 4 Vapor Sampling head

CATEGORY: Static Spark Potential

USE:

Used for obtaining Type 4 dome space vapor samples.

APPLICABLE CONTROL NOT MET:	WHEN CONTROL NOT MET:
ICS 2 #3	FG 1 ex-tank FG 1,2 dome intrusive

DISCUSSION OF FLAMMABLE GAS JCO APPLICABILITY:

Type 4 vapor sampling is the tank vapor sampling method currently used. It is a marked improvement over Type 3 sampling in both cost, schedule and sampling time. The sampling is done in situ, making the data more reliable than the Type 3 vapor sampling. Type 3 vapor sampling requires the removal of vapors from a tank through heated sampling tubes. Type 4 vapor sampling requires the insertion of a sampling head equipped with sampling media. Figure 4VS-1 is a sketch of the equipment inserted into the tank vapor space. Some of the items on the sampling head are made of different polymers. Encased within the acrylic tubing are approximately 1 foot of the plastic flexible tube bundle, the bulkhead top collar (ultra-high molecular weight plastic) and Teflon filter. The tube bundle, within the acrylic tubing, terminates with the stainless steel sample head (non-sparking) containing the exposed (to tank vapors) Teflon alignment guide. The remainder of the tube bundle above the acrylic tubing is wrapped in plastic sleeving.

The scope of this requested exception is limited to the Type 4 vapor sampling head items.

RISK ACCEPTANCE:

See risk acceptance writeup starting on next page.

IMPACT OF NOT ACCEPTING RISK OF CONTINUED USE:

Facility Group 1 Tanks-Would halt Type 4 vapor sampling until alternate items were available.

Facility Group 2 Tanks-Would halt Type 4 vapor sampling until alternate items were available.

Facility Group 3 or other Tanks-No Impact.

REQUESTED APPROVAL FROM DOE:

Continued use when performing flammable gas monitoring control [B] for above polymeric items during Type 4 vapor sampling in:

1) FG 1 ex-tank regions
2) FG 1,2 tanks during dome intrusive activities

Risk Acceptance for Type 4 vapor sampling head.

The Teflon and various plastic components in the Type 4 vapor sampling head were all specifically selected for use based upon their physical characteristics and because they were shown to cause minimal bias to the sampling operation from outgassing of organics. Alternate materials cannot be used for the Type 4 vapor sampling head without going through extensive testing. The sampling method is sufficiently sensitive that during early sampling with the Type 4 vapor sampler, it was found that the results were being biased by outgassing from the plasticizer used in the tape that attached the plastic sleeve to the sample head. This required revising the taping method normally used for sleeving objects inserted into tank risers to the one shown in Figure 4VS-1 which maintains a barrier between the tape and the vapor sampling head inlet. The ends of the sampling tubes are tightly pressed into the teflon end piece. There is no flow of tank vapors into the acrylic housing as there is no driving force to cause vapors to pass by the seal.

Static buildup is a function of the RH and physical factors that influence a charge such as mechanical friction. The Type 4 vapor sampling head is only in a tank vapor space for a few hours. The unit is stationary at that time while the tank vapors flow through the tubes. There is no work done to induce a static charge.

The RH has been measured at >50% in 95% of the non-exhausted tanks sampled (as of 7/96). This is to be expected since the concentration of water in air in a sealed chamber will eventually reach saturation, and be in equilibrium with the liquid phase. The remaining 5% of the non-exhausted tanks all measured approximately between 40 to 50% RH. The SX Farm exhausted tanks measured approximately between 20 to 40% RH, except one tank which was 65% RH. Tank 241-C-105 measured 40 to 60% RH, and Tank 241-C-106 measured 50 to 100% RH. Therefore, for non-exhausted tanks, plastics in dome intrusive regions are expected to be in compliance with the Flammable Gas JCO about 95% of the time. For exhausted tanks, Tanks 241-C-105 and 241-C-106 are approximately 50% RH. Most double-shell tanks would be expected to be the same due to the liquid or moist solid surfaces.

Concern is when a spark occurs coincident with a flammable gas mixture >100% lower flammability limit (LFL). Per Appendix A of this JCO, vapor space sample results for single-shell tanks indicate that 70 to 90% of the tanks show negligible or nondetectable flammable gas levels during non waste intrusive work. The remaining 10 to 30% of the tanks average 1.2 to 1.5% of the LFL. The highest CGM measurement (7%) recorded to date using the organic vapor monitor (OVM) samples equated to approximately 3.5% of the LFL. The highest vapor sample results obtained via Type B/Type 4 vapor sampling correlates to 2.51% of the LFL. One inactive miscellaneous underground storage tank (IMUST) sampled showed no flammable gas present. The highest recorded organic concentration, 3.8% of the LFL, was found in Tank 241-C-103. Tank 241-C-103 is the only waste tank known to have a significant floating organic layer. Since July 1996, one tank has shown a 10% of the LFL combustible gas meter (CGM) reading (5% of the LFL), and one showed a 13% LFL CGM reading (6.5% LFL) prior to intrusive activities. Actively ventilated tanks would be expected to have low flammable gas levels because of the constant dilution air passing through the tanks. No actively ventilated single-shell tanks have shown flammable gas levels above minimum detectible levels in either the Type 3 or 4 vapors samples or in the special OVM samples taken in these tanks.

Trapping of gases is not a concern with the Type 4 vapor sampling head as the top end of the external sleeving is open. The following list summarizes the points to be considered when evaluating the risk associated with using the Type 4 vapor sampling head:

1) The air flow in the sampler tubing is insufficient to induce a static charge.

2) There is a low potential for static buildup and subsequent discharge with the unit. There are no moving parts and the head is in the tank vapor space for only a few hours.

3) The RH in passively ventilated tanks or waste intruding equipment is expected to be high enough so that the majority of the time nonconductive plastic use in these areas is in compliance with the Flammable Gas JCO.

4) There is no liquid or wind exposure to the head to cause a static buildup.

5) Flammable gas levels have not been seen in excess of the LFL in the tank dome space for any tank except in pre-mitigated Tank 241-SY-101 during one or more gas release event (GREs). In about 80% of the single-shell tanks that have been sampled the LFL is below detectable. In the remaining 20% of the single-shell tanks the LFL is less than 2%, except for 2-3 specific readings which have ranged up to 6.5%. The presence of flammable gases in actively ventilated single-shell and double-shell tanks would be expected to be low most of the time because of the constant dilution air. Therefore, although the presence of flammable gas concentrations in dome intrusive areas above the LFL cannot be positively ruled out, they can be expected to be a rare occurrence.

Based upon the following, continued use of the Type 4 vapor sampling head in Tank Farms poses a low risk of causing a flammable gas ignition event; a) consideration of the small amount of time the Type 4 vapor sampling head is exposed to the tank vapor space, b) the low percentage of the time the Type 4 vapor sampling head will be used in a dome intrusive regions when the RH will be low enough that the head use would not meet the Flammable Gas JCO, c) the lack of any significant static generating mechanisms, and d) the small percent of the time that flammable gas levels might be above the LFL.

The risk with continuing use of the Type 4 vapor sampling head is further reduced by performing flammable gas monitoring of the work area prior to and during use. This will include monitoring per method [A]. See definition of monitoring methods at the end of this section.

When flammable gas levels reach 25% of the LFL, work ceases as required per the Flammable Gas JCO. The National Fire Protection Association (NFPA 30, 1988) recommends that processes be controlled so that flammable gas concentrations are <25 percent of the LFL, when relying upon vapor space flammability levels to preclude the possibility of an ignition. DOE Order 5480.4 requires Hanford waste tanks to be operated within NFPA guidelines. Thus, a control of <25% of the LFL has been established for performing activities in and around Tank Farm facilities. Because of the unpredictable nature of GREs, it is currently not possible to ensure that 25% of the LFL is never exceeded. Procedures and controls are thus in place to minimize the potential for a tank to exceed 25% of the LFL, and to cease work in areas common with the tank vapor space when the flammable gas concentration exceeds this value. This 25% limit is far below the actual limit at which flammability can occur, and is conservatively chosen to allow for potential measurement errors.

Monitoring is normally performed with a portable CGM. The CGM is calibrated with pentane and reads high by 100% when monitoring for hydrogen in air. For conservatism, no correction factor is applied in the field to the CGM reading when used for monitoring for personnel protection. Thus a 25% of the LFL reading on a CGM is actually 12.5% of the LFL for hydrogen in air, but is treated as if it were 25%. Depending upon the concentration of the flammable gas constituent and oxidants (ammonia, methane, carbon monoxide, nitrous oxide) a 25% LFL CGM reading will be indicative of 12.5% to approximately 20% of the LFL. The response time of a CGM to an increase in flammable gas concentration is not instantaneous. The CGM starts responding to an increase in flammable gas concentrations almost immediately upon the gas reaching the CGM internals. The internal response time for a CGM to reach a 10% of the LFL indication (5% LFL actual for hydrogen in air) when exposed to a 23% of the LFL pentane mixture (equivalent to a 11.5% of the LFL hydrogen in air mixture) ranged from 7-12 seconds in a number of informal tests. Time to reach the full 23% test gas indication took 20-40 seconds.

If the CGM is drawing a sample out of a tank dome space, the time for the tank vapors to reach the CGM is approximately 26 seconds, based upon the 500 cm^3/min CGM flow and the tubing currently used for flammable gas monitoring. Thus an instantaneous change from 0 to 12.5% of the LFL for hydrogen in air in a tank vapor space (an indicated 25% of the LFL) would not indicate any change at all on a CGM for about 26 seconds. At 26 seconds, the indicated LFL would begin to rise and 33-36 seconds after the step change the CGM would indicate about 10% of the LFL. The CGM would indicate 25% of the LFL approximately 45-65 seconds after the step change.

A CGM is an acceptable instrument to use for flammable gas monitoring in Dome Intrusive regions as long as work is halted upon significant increase in the indicated flammable gas levels. An instantaneous step increase in an entire tank dome vapor space concentration from 0 to 100% of the LFL is not realistic due to the large volume of gas which would be required to be released, although localized spots near the waste surface could show a quick step change to >100% of the LFL from relatively small releases of gases from below the waste surface. The risk is low that a gas stream would be released from the waste surface of a 75 foot diameter tank and enter the 2½ inch diameter sampling head directly above without the gas being partially diffused by tank vapors. The sampling head is not routinely used near the waste surface where there could be quick localized step changes in the flammable gas concentration. Were high gas concentrations present for a few seconds until noted by the CGM, there is still low risk of a static discharge as there are no moving parts to the Type 4 vapor sampling head and no major static discharge inducing activity.

The current polymeric materials used for vapor sampling were selected after a study which evaluated the effects of outgassing with a variety of compounds. Using other materials, even if they were available, would result in unnecessary expense and delays to the vapor sampling program. The impact on resolution of tank safety issues by halting Type 4 vapor sampling is a more significant concern than the low risk of a flammable gas ignition event due to a spark from these items.

FIGURE 4VS-1 TYPE 4 VAPOR SAMPLING HEAD

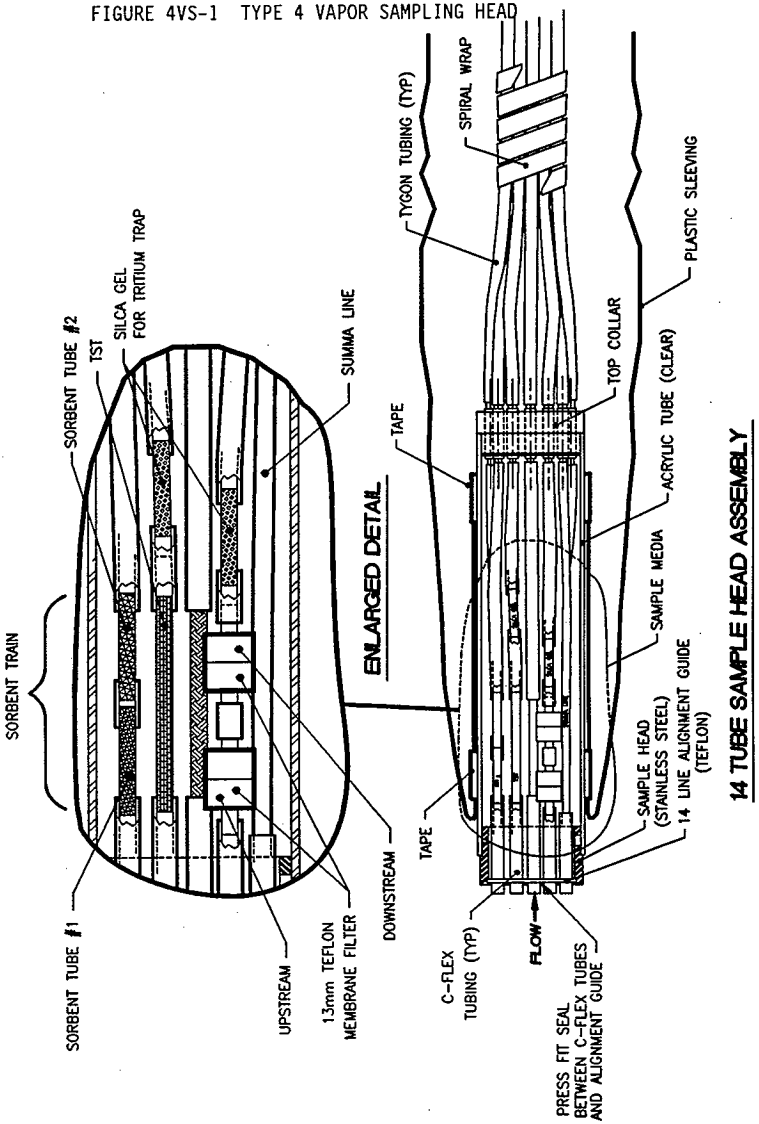

ITEM CLASSIFICATION: NON DE MINIMUS

ITEM NUMBER: 23

EQUIPMENT: Electric Impact Wrench

CATEGORY: Electrical Spark Potential, Mechanical Spark Potential

USE:

Used for loosening and tightening jumper heads in pits.

APPLICABLE CONTROL NOT MET:	WHEN CONTROL NOT MET:
ICS 2 #1, #5	FG 1 ex-tank

DISCUSSION OF FLAMMABLE GAS JCO APPLICABILITY:

The impact wrench is a large, 480 VAC electrical induction motor and socket. It is not designed to meet the ICS controls. The unit is used in tank farms for making jumper changes.

RISK ACCEPTANCE:

See risk acceptance writeup starting on next page.

IMPACT OF NOT ACCEPTING RISK OF CONTINUED USE:

Facility Group 1 Tanks-Will shut down most pit work until an alternate wrench, administrative controls or means of isolating the pit from the tank vapor space can be derived.

Facility Group 2 Tanks-No impact.

Facility Group 3 or other Tanks-No impact.

REQUESTED APPROVAL FROM DOE:

Continued use when performing flammable gas monitoring control [A] for the electric impact wrench:

1) FG 1 ex-tank regions (NWD, LWD)

Risk Acceptance for Electric Impact Wrench.

The electrical impact wrench is both an electrical spark source and a mechanical spark source. It is used for tightening and loosening horizontal and vertical jumper heads in pump pits, diversion boxes, valve pits and any location where the old design Hanford or newer PUREX jumper heads are present. No equipment is known to exist which can meet the Flammable Gas JCO controls from both electrical and mechanical spark source standpoints. Manual wrenches are not practical for the majority of the high torques required and would result in high personnel exposures.

Concern is when a spark occurs coincident with a flammable gas mixture >100% LFL. Per Appendix A of this Flammable Gas JCO, vapor space sample results for single-shell tanks indicate that approximately 70-90% of the tanks show negligible or nondetectable flammable gas levels during non waste intrusive work. The remaining 10-30% of the tanks average 1.2-1.5% of the LFL. The highest CGM measurement (7%) recorded to date using the OVM samples equated to approximately 3.5% of the LFL. The highest vapor sample results obtained via Type B/Type 4 vapor sampling correlates to 2.51% of the LFL. One IMUST tank sampled showed no flammable gas present. The highest recorded organic concentration, 3.8% of the LFL, was found in Tank 241-C-103. Tank 241-C-103 is the only waste tank known to have a significant floating organic layer. Since July 1996, one tank has shown a 10% of the LFL CGM reading (5% of the LFL), and one showed a 13% LFL CGM reading (6.5% LFL) prior to intrusive activities. Actively ventilated tanks would be expected to have low flammable gas levels because of the constant dilution air passing through the tanks. No actively ventilated single-shell tanks have shown flammable gas levels above minimum detectible levels in either the Type 3 or 4 vapors samples or in the special OVM samples taken in these tanks.

The following can be summarized concerning the risk associated with using the impact wrench:

1) Its use is required to make jumper changes or repairs.

2) Flammable gas levels have not been seen in excess of the LFL in the tank dome space for any tank except in pre-mitigated Tank 241-SY-101 during one or more GREs. In about 80% of the single-shell tanks that have been sampled the LFL is below detectable. In the remaining 20% of the single-shell tanks the LFL is less than 2%, except for 2-3 specific readings which have ranged up to 6.5%. The presence of flammable gases in actively ventilated single-shell and double-shell tanks would be expected to be low most of the time because of the constant dilution air. Therefore, although the presence of flammable gas concentrations in Dome Intrusive areas above the LFL cannot be positively ruled out, they can be expected to be a rare occurrence. The presence of flammable gases at concentrations >25% of the LFL in an Ex Tank area is expected to be even less likely.

Based upon the following, continued use of the impact wrench in Tank Farms poses a low risk of causing a flammable gas ignition event; a) the requirement to use the wrench if some transfers are to continue and b) the small percent of the time that flammable gas levels might be above the LFL in the Ex Tank pit area.

The risk associated with continuing use of the impact wrench is further reduced by performing flammable gas monitoring of the work area prior to and during use. This will include monitoring per method [A], which will require continuous monitoring of the tank dome space or the pit. See definition of monitoring methods at the end of this section.

When flammable gas levels reach 25% of the LFL, work ceases as required per the monitoring requirements of this Flammable Gas JCO. The National Fire Protection Association (NFPA 30, 1988) recommends that processes be controlled so that flammable gas concentrations are <25 percent of the LFL, when relying upon vapor space flammability levels to preclude the possibility of an ignition. DOE 5480.4 requires Hanford waste tanks to be operated within NFPA guidelines. Thus, a control of <25% of the LFL has been established for performing activities in and around Tank Farm facilities. Because of the unpredictable nature of GREs, it is currently not possible to ensure that 25% of the LFL is never exceeded. Procedures and controls are thus in place to minimize the potential for a tank to exceed 25% of the LFL, and to cease work in areas common with the tank vapor space when the flammable gas concentration exceeds this value. This 25% limit is far below the actual limit at which flammability can occur, and is conservatively chosen to allow for potential measurement errors.

Monitoring is normally performed with a portable CGM. The CGM is calibrated with pentane and reads high by 100% when monitoring for hydrogen in air. For conservatism, no correction factor is applied in the field to the CGM reading when used for monitoring for personnel protection. Thus a 25% of the LFL reading on a CGM is actually 12.5% of the LFL for hydrogen in air, but is treated as if it were 25%. Depending upon the concentration of the flammable gas constituent and oxidants (ammonia, methane, carbon monoxide, nitrous oxide) a 25% LFL CGM reading will be indicative of 12.5% to approximately 20% of the LFL. The response time of a CGM to an increase in flammable gas concentration is not instantaneous. The CGM starts responding to an increase in flammable gas concentrations almost immediately upon the gas reaching the CGM internals. The internal response time for a CGM to reach a 10% of the LFL indication (5% LFL actual for hydrogen in air) when exposed to a 23% of the LFL pentane mixture (equivalent to a 11.5% of the LFL hydrogen in air mixture) ranged from 7 to 12 seconds in a number of informal tests. Time to reach the full 23% test gas indication took 20 to 40 seconds.

If the CGM is drawing a sample out of a tank dome space, the time for the tank vapors to reach the CGM is approximately 26 seconds, based upon the 500 cm^3/min CGM flow and the tubing currently used for flammable gas monitoring. Thus an instantaneous change from 0 to 12.5% of the LFL for hydrogen in air in a tank vapor space (an indicated 25% of the LFL) would not indicate any change at all on a CGM for about 26 seconds. At 26 seconds, the indicated LFL would begin to rise and 33-36 seconds after the step change the CGM would indicate about 10% of the LFL. The CGM would indicate 25% of the LFL approximately 45 to 65 seconds after the step change.

If the CGM was being used to sample the immediate work area where an impact wrench was used the 26 second delay would not apply, the CGM would start to rise immediately and a reading of 10% of the LFL would be noted 7 to 12 seconds after sensing a 25% step increase in the LFL.

A CGM is an acceptable instrument to use for flammable gas monitoring in dome intrusive or ex-tank regions as long as work is halted upon significant increase in the indicated flammable gas levels. An instantaneous step increase in an entire tank dome vapor space concentration from 0 to 100% of the LFL is not realistic due to the large volume of gas which would be required to be released, although localized spots near the waste surface could show a quick step change to >100% of the LFL from relatively small releases of gases from below the waste surface. The risk is very low that a gas stream would be released from the waste surface of a 75 foot diameter tank and enter a 4 inch diameter pit drain directly above without the gas being partially diffused by tank vapors. Since monitoring for flammable gases is done both in the tank dome space and the pit while using the wrench, the current response time for CGMs is not a significant concern.

There does not appear to be a suitable substitute for an electric impact wrench which could adequately tighten and loosen jumper heads and, at the same time, create no potential for mechanical sparking. In its tank farm applications, the impact wrench is judged to present a low risk for ignition of flammable gas due to the combination of the location of its use and the relatively short duration of its use. Therefore, the benefits derived from the use of the impact wrench (e.g., enabling waste transfers and repairing jumper leaks) must be balanced with the low risk introduced by its potential for mechanical sparking.

ITEM CLASSIFICATION: NON DE MINIMUS

ITEM NUMBER: 24

EQUIPMENT: Type 4 Vapor Sampling Cart

CATEGORY: Electrical Spark Potential

USE:

Used for monitoring flows and providing suction for gas drawn through sampling tubes inserted in the tank.

APPLICABLE CONTROL NOT MET:	WHEN CONTROL NOT MET:
ICS 2 #5	FG 1,2 dome intrusive

DISCUSSION OF FLAMMABLE GAS JCO APPLICABILITY:

The electronic equipment on the Type 4 sampling cart consists of four mass flowmeters, four electronic totalizers, and a vacuum pump. The Type 4 vapor sampling cart establishes the vacuum, and monitors the flow of tank vapors from the Type 4 vapor sampling head. The information is not yet available to show whether the items on the cart meet the controls for dome intrusive electrical equipment for Facility Group 1 and 2 tanks. Although the definitions in the Flammable Gas JCO would imply the equipment is not required to meet Dome Intrusive criteria, a conservative assumption is that it should meet the requirements as filtered tank gases pass through the equipment and any flammable mixtures would be exposed to the electrical equipment internals. Type 4 vapor sampling is currently only performed on FG 2 and FG 3 tanks, plans are to sample at least one FG 1 tank in the future.

RISK ACCEPTANCE:

See risk acceptance writeup starting on next page.

IMPACT OF NOT ACCEPTING RISK OF CONTINUED USE:

Facility Group 1 Tanks-No impact unless sample FG 1 tanks. If FG 1 tanks are sampled, the impact would be the same as for FG 2 tanks.

Facility Group 2 Tanks-If the risk of continuing to use the current equipment is not accepted, all in-situ vapor sampling (Type 4) vapor sampling activities will be shutdown until different equipment is available or the existing equipment can be shown to meet the Flammable Gas JCO criteria.

Facility Group 3 or other Tanks-No Impact.

REQUESTED APPROVAL FROM DOE:

Continued use when performing flammable gas monitoring control [A] for the current Type 4 vapor sampling cart:

1) FG 1,2 dome intrusive regions

Risk Acceptance for Type 4 vapor sampling cart.

The scope of this discussion is limited to potential electrical spark ignition events from the Type 4 sampling cart.

The Type 4 vapor sampling cart was developed to sample tank vapors to support resolution of tank safety issues. It replaces Type 3 vapor sampling which is more expensive and time consuming, and did not provide in situ sampling.

Concern is when a spark occurs coincident with a flammable gas mixture >100% of the LFL. Per Appendix A of this Flammable gas JCO, vapor space sample results for single-shell tanks indicate that approximately 70-90% of the tanks show negligible or nondetectable flammable gas levels during non waste intrusive work. The remaining 10-30% of the tanks average 1.2-1.5% of the LFL. The highest CGM measurement (7%) recorded to date using the OVM samples equated to approximately 3.5% of the LFL. The highest vapor sample results obtained via Type B/Type 4 vapor sampling correlates to 2.51% of the LFL. One IMUST tank sampled showed no flammable gas present. The highest recorded organic concentration, 3.8% of the LFL, was found in Tank 241-C-103. Tank 241-C-103 is the only waste tank known to have a significant floating organic layer. Since July 1996, one tank has shown a 10% of the LFL CGM reading (5% of the LFL), and one showed a 13% LFL CGM reading (6.5% LFL) prior to intrusive activities. Actively ventilated tanks would be expected to have low flammable gas levels because of the constant dilution air passing through the tanks. No actively ventilated single-shell tanks have shown flammable gas levels above minimum detectible levels in either the Type 3 or 4 vapors samples or in the special OVM samples taken in these tanks.

The following can be summarized concerning the actual risk from using the Type 4 vapor sampling cart:

1) Analytical data from Type 4 vapor sampling is used to support waste tank safety issue resolution.

2) Flammable gas levels have not been seen in excess of the LFL in the tank dome space for any tank except in Tank 241-SY-101 during one or more GREs. In about 80% of the single-shell tanks that have been sampled the LFL is below detectable. In the remaining 20% of the single-shell tanks the LFL is less than 2%, except for 2-3 specific readings which have ranged up to 6.5%. The presence of flammable gases in actively ventilated single-shell and double-shell tanks would be expected to be low most of the time because of the constant dilution air. Therefore, although the presence of flammable gas concentrations in Dome Intrusive areas above the LFL cannot be positively ruled out, they can be expected to be a rare occurrence.

Based upon the need for Type 4 vapor sampling and the small percent of the time that flammable gas levels might be above the LFL, continued use of the Type 4 vapor sampling cart poses a low risk of causing a flammable gas ignition event.

The risk associated with continued use of the Type 4 vapor sampling cart is further reduced by performing flammable gas monitoring of the work area and dome space prior to and during use. This will include monitoring per method [A]. See definition of monitoring methods at the end of this section.

When flammable gas levels reach 25% of the LFL, work ceases as required per the monitoring requirements this Flammable Gas JCO. The National Fire Protection Association (NFPA 30, 1988) recommends that processes be controlled so that flammable gas concentrations are <25 percent of the LFL, when relying upon vapor space flammability levels to preclude the possibility of an ignition. DOE Order 5480.4 requires Hanford waste tanks to be operated within NFPA guidelines. Thus, a control of <25% of the LFL has been established for performing activities in and around Tank Farm facilities. Because of the unpredictable nature of GREs, it is currently not possible to ensure that 25% of the LFL is never exceeded. Procedures and controls are thus in place to minimize the potential for a tank to exceed 25% of the LFL, and to cease work in areas common with the tank vapor space when the flammable gas concentration exceeds this value. This 25% limit is far below the actual limit at which flammability can occur, and is conservatively chosen to allow for potential measurement errors.

Monitoring is normally performed with a portable CGM. The CGM is calibrated with pentane and reads high by 100% when monitoring for hydrogen in air. For conservatism, no correction factor is applied in the field to the CGM reading when used for monitoring for personnel protection. Thus a 25% of the LEL reading on a CGM is actually 12.5% of the LFL for hydrogen in air, but is treated as if it were 25%. Depending upon the concentration of the flammable gas constituent and oxidants (ammonia, methane, carbon monoxide, nitrous oxide) a 25% LFL CGM reading will be indicative of 12.5% to approximately 20% of the LFL. The response time of a CGM to an increase in flammable gas concentration is not instantaneous. The CGM starts responding to an increase in flammable gas concentrations almost immediately upon the gas reaching the CGM internals. The internal response time for a CGM to reach a 10% of the LFL indication (5% LFL actual for hydrogen in air) when exposed to a 23% of the LFL pentane mixture (equivalent to a 11.5% of the LFL hydrogen in air mixture) ranged from 7 to 12 seconds in a number of informal tests. Time to reach the full 23% test gas indication took 20 to 40 seconds.

If the CGM is drawing a sample out of a tank dome space, the time for the tank vapors to reach the CGM is approximately 26 seconds, based upon the 500 cm^3/min CGM flow and the tubing currently used for flammable gas monitoring. Thus an instantaneous change from 0 to 12.5% of the LFL for hydrogen in air in a tank vapor space (an indicated 25% of the LFL) would not indicate any change at all on a CGM for about 26 seconds. At 26 seconds, the indicated LFL would begin to rise and 33 to 36 seconds after the step change the CGM would indicate about 10% of the LFL. The CGM would indicate 25% of the LFL approximately 45-65 seconds after the step change.

A CGM is an acceptable instrument to use for flammable gas monitoring in Dome Intrusive regions as long as work is halted upon significant increase in the indicated flammable gas levels. An instantaneous step increase in an entire tank dome vapor space concentration from 0 to 100% of the LFL is not realistic due to the large volume of gas which would be required to be released, although localized spots near the waste surface could show a quick step change to >100% of the LFL from relatively small releases of gases from below the waste surface. The risk is very low that a gas stream would be released from the waste surface of a 75 foot diameter tank and enter the 2½ inch diameter sampling head directly above without the gas being partially diffused by tank vapors. The sampling head is not routinely used near the waste surface where there could be quick localized step changes in the flammable gas concentration. Were high gas concentrations present for a few seconds until noted by the CGM, the CGM would indicate high flammable gas levels present before flammable gases approached the Type 4 vapor sampling cart, leaving adequate time for shutdown.

Continuous monitoring is performed during Type 4 vapor sampling using a CGM. Sampling is conducted through a tube within the flexible tube bundle that is lowered into the tank. Tank vapors flow faster through the tubing used for flammable gas monitoring than through the tubing used for sampling the tank gases. This is because the vapors are drawn through the flammable gas monitoring tube with the CGM while the tank vapors to be sampled are drawn through sampling tubes by the vacuum pump on the cart. The time for tank vapors to reach the CGM is approximately 26 seconds. Tank vapors being sampled by the cart take approximately 65 seconds to reach the in situ vapor sampling instrumentation on the cart. Therefore, with the current flammable gas monitoring arrangement, a significant change in the tank flammable gas concentration would be noticed within 33-38 seconds or less, assuming there were no other indications of a GRE. This still leaves approximately 30 seconds before the instrumentation on the cart would see the gas, which allows adequate time for personnel response to shut off the vacuum pump. This monitoring is continuous during Type 4 vapor sampling while the vacuum pump is running. Shutdown of the electrical equipment on the Type 4 cart is manual upon receipt of a CGM alarm or indication.

Additionally, given that vapor sampling is non waste disturbing, the activity would not induce a GRE.

ITEM CLASSIFICATION: NON DE MINIMUS

ITEM NUMBER: 25

EQUIPMENT: Open Pit Work Related Equipment (e.g., T-bar, chokers, shackles, bull hooks, pike poles, sockets; installation/removal of process blanks, vapor seals, jumpers and leak detectors)

CATEGORY: Mechanical Spark Potential

USE:

Used for handling items during installation or removal inside open pits

APPLICABLE CONTROL NOT MET:	WHEN CONTROL NOT MET:
ICS 2 #1	FG 1 ex-tank

DISCUSSION OF FLAMMABLE GAS JCO APPLICABILITY:

The subject items are normally made of carbon steel and were not procured to meet non-sparking criteria.

RISK ACCEPTANCE:

See risk acceptance writeup starting on next page.

IMPACT OF NOT ACCEPTING RISK OF CONTINUED USE:

Facility Group 1 Tanks-Will shut down all pit work. Will halt installation and removal of equipment in the waste tanks.

Facility Group 2 Tanks-No Impact.

Facility Group 3 or other Tanks-No Impact.

REQUESTED APPROVAL FROM DOE:

Continued use when performing flammable gas monitoring controls [A] as appropriate for rigging equipment:

1) FG 1 during ex-tank activities.

Risk Acceptance for Open Pit Work Related Equipment.

These items are potential mechanical spark sources. They are used for moving and adjusting equipment or sealing lines in various pits. Due to their size and weight, replacement equipment which meets the Flammable Gas JCO requirements is not readily or economically available. Control is provided through the use of proper rigging controls and procedures. Tools and equipment in this exception request are either not readily or economically available in a spark resistant version or are only rarely used in areas which require the Flammable Gas JCO controls.

Concern is when a spark occurs coincident with a flammable gas mixture >100% of the LFL. Per Appendix A this Flammable Gas JCO, vapor space sample results for single-shell tanks indicate that approximately 70 to 90% of the tanks show negligible or nondetectable flammable gas levels during non waste intrusive work. The remaining 10 to 30% of the tanks average 1.2 to 1.5% of the LFL. The highest CGM measurement (7%) recorded to date using the OVM samples equated to approximately 3.5% of the LFL. The highest vapor sample results obtained via Type B/Type 4 vapor sampling correlates to 2.51% of the LFL. One IMUST tank sampled showed no flammable gas present. The highest recorded organic concentration, 3.8% of the LFL, was found in Tank 241-C-103. Tank 241-C-103 is the only waste tank known to have a significant floating organic layer. Since July 1996, one tank has shown a 10% of the LFL CGM reading (5% of the LFL), and one showed a 13% LFL CGM reading (6.5% LFL) prior to intrusive activities. Actively ventilated tanks would be expected to have low flammable gas levels because of the constant dilution air passing through the tanks. No actively ventilated single-shell tanks have shown flammable gas levels above minimum detectible levels in either the Type 3 or 4 vapors samples or in the special OVM samples taken in these tanks.

The following can be summarized concerning the risk associated with using these tools and equipment:

1) This equipment is required to accomplish pit work and to install and remove equipment in waste tanks.

2) Flammable gas levels have not been seen in excess of the LFL in the tank dome space for any tank except in Tank 241-SY-101 during one or more GREs. In about 80% of the single-shell tanks that have been sampled the LFL is below detectable. In the remaining 20% of the single-shell tanks the LFL is less than 2%, except for 2-3 specific readings which have ranged up to 6.5%. The presence of flammable gases in actively ventilated single-shell and double-shell tanks would be expected to be low most of the time because of the constant dilution air. Therefore, although the presence of flammable gas concentrations in dome intrusive areas above the LFL cannot be positively ruled out, they can be expected to be a rare occurrence. The presence of flammable gases at concentrations >25% of the LFL in an ex-tank area is therefore expected to be even less likely.

Based upon the following, continued use of these tools and equipment in Tank Farms poses a low risk of causing a flammable gas ignition event; a) the use of the tools and equipment is required if transfers are to continue and b) the small percent of the time that flammable gas levels might be above the LFL in the ex-tank pit area.

The risk associated with continuing use of the tools and equipment is further reduced by performing flammable gas monitoring of the work area prior to and during use. This will include monitoring per method [A]. See definition of monitoring methods at the end of this section.

When flammable gas levels reach 25% of the LFL, work ceases as required per the monitoring requirements of this Flammable Gas JCO. The National Fire Protection Association (NFPA 30, 1988) recommends that processes be controlled so that flammable gas concentrations are <25 percent of the LFL, when relying upon vapor space flammability levels to preclude the possibility of an ignition. DOE Order 5480.4 requires Hanford waste tanks to be operated within NFPA guidelines. Thus, a control of <25% of the LFL has been established for performing activities in and around Tank Farm facilities. Because of the unpredictable nature of GREs, it is currently not possible to ensure that 25% of the LFL is never exceeded. Procedures and controls are thus in place to minimize the potential for a tank to exceed 25% of the LFL, and to cease work in areas common with the tank vapor space when the flammable gas concentration exceeds this value. This 25% limit is far below the actual limit at which flammability can occur, and is conservatively chosen to allow for potential measurement errors.

Monitoring is normally performed with a portable CGM. The CGM is calibrated with pentane and reads high by 100% when monitoring for hydrogen in air. For conservatism, no correction factor is applied in the field to the CGM reading when used for monitoring for personnel protection. Thus a 25% of the LFL reading on a CGM is actually 12.5% of the LFL for hydrogen in air, but is treated as if it were 25%. Depending upon the concentration of the flammable gas constituent and oxidants (ammonia, methane, carbon monoxide, nitrous oxide) a 25% LFL CGM reading will be indicative of 12.5% to approximately 20% of the LFL. The response time of a CGM to an increase in flammable gas concentration is not instantaneous. The CGM starts responding to an increase in flammable gas concentrations almost immediately upon the gas reaching the CGM internals. The internal response time for a CGM to reach a 10% of the LFL indication (5% LFL actual for hydrogen in air) when exposed to a 23% of the LFL pentane mixture (equivalent to a 11.5% of the LFL hydrogen in air mixture) ranged from 7 to 12 seconds in a number of informal tests. Time to reach the full 23% test gas indication took 20 to 40 seconds.

If the CGM is drawing a sample out of a tank dome space, the time for the tank vapors to reach the CGM is approximately 26 seconds, based upon the 500 cm^3/min CGM flow and the tubing currently used for flammable gas monitoring. Thus an instantaneous change from 0 to 12.5% of the LFL for hydrogen in air in a tank vapor space (an indicated 25% of the LFL) would not indicate any change at all on a CGM for about 26 seconds. At 26 seconds, the indicated LFL would begin to rise and 33-36 seconds after the step change the CGM would indicate about 10% of the LFL. The CGM would indicate 25% of the LFL approximately 45-65 seconds after the step change.

If the CGM was being used to sample the ex-tank area where these tools are used the 26 second delay would not apply, the CGM would start to rise immediately and a reading of 10% of the LFL would be noted 7-12 seconds after sensing a 25% step increase in the LFL.

A CGM is an acceptable instrument to use for flammable gas monitoring in ex-tank and dome intrusive regions as long as work is halted upon significant increase in the indicated flammable gas levels. An instantaneous step increase in an entire tank dome vapor space concentration from 0 to 100% of the LFL is not realistic due to the large volume of gas which would be required to be released, although localized spots near the waste surface could show a quick step change to >100% of the LFL from relatively small releases of gases from below the waste surface. The risk is very low that a gas stream would be released from the waste surface of a 75 foot diameter tank and enter a 4 inch diameter pit drain directly above without the gas being partially diffused by tank vapors. Since monitoring for flammable gases is done in the pit while using the tools and equipment, the current response time for CGMs is not a significant concern.

ITEM CLASSIFICATION: NON DE MINIMUS

ITEM NUMBER: 26

EQUIPMENT: Closed Pit Work including the Installation and Removal of Valve Handles

CATEGORY: Mechanical Spark Potential

USE:

Used for operating valves in pits.

APPLICABLE CONTROL NOT MET:	WHEN CONTROL NOT MET:
ICS 2 #1	FG 1 ex-tank FG 2 ex-tank (GWD)

DISCUSSION OF FLAMMABLE GAS JCO APPLICABILITY:

Valve handles are made of carbon steel. They were not procured to meet non-sparking criteria. The valve handles are bulky and are a potential spark source during installation and removal. Valve operation is covered as a de minimus item.

RISK ACCEPTANCE:

See risk acceptance writeup starting on next page.

IMPACT OF NOT ACCEPTING RISK OF CONTINUED USE:

Facility Group 1 Tanks-Will shut down transfers.

Facility Group 2 Tanks- May impact transfers.

Facility Group 3 or other Tanks-No Impact.

REQUESTED APPROVAL FROM DOE:

Continued use when performing flammable gas monitoring control [A] for installation and removal of valve handles in:

1) FG 1 tank ex-tank regions.
2) FG 2 tank ex-tank regions (GWD) operations

Risk Acceptance for Closed Pit Work.

Valve handles are potential mechanical spark sources as they could be dropped during installation or removal due to their size and weight. Concern is when a spark occurs coincident with a flammable gas mixture >100% of the LFL. Per Appendix A of this Flammable Gas JCO, vapor space sample results for single-shell tanks indicate that approximately 70 to 90% of the tanks show negligible or nondetectable flammable gas levels during non waste intrusive work. The remaining 10 to 30% of the tanks average 1.2 to 1.5% of the LFL. The highest CGM measurement (7%) recorded to date using the OVM samples equated to approximately 3.5% of the LFL. The highest vapor sample correlates to 2.51% of the LFL. One IMUST tank sampled showed no flammable gas present. The highest recorded organic concentration, 3.8% of the LFL, was found in Tank 241-C-103. Tank 241-C-103 is the only waste tank known to have a significant floating organic layer. Since July 1996, one tank has shown a 10% of the LFL CGM reading (5% of the LFL), and one showed a 13% LFL CGM reading (6.5% LFL) prior to intrusive activities. Actively ventilated tanks would be expected to have low flammable gas levels because of the constant dilution air passing through the tanks. No actively ventilated single-shell tanks have shown flammable gas levels above minimum detectible levels in either the Type 3 or 4 vapors samples or in the special OVM samples taken in these tanks.

The following can be summarized concerning the risk associated with installing and removing valve handles,

1) Valve handles are required to perform transfers.

2) Flammable gas levels have not been seen in excess of the LFL in the tank dome space for any tank except in pre-mitigated Tank 241-SY-101 during one or more GREs. In about 80% of the single-shell tanks that have been sampled the LFL is below detectable. In the remaining 20% of the single-shell tanks the LFL is less than 2%, except for 2-3 specific readings which have ranged up to 6.5%. The presence of flammable gases in actively ventilated single-shell and double-shell tanks would be expected to be low most of the time because of the constant dilution air. Therefore, although the presence of flammable gas concentrations in dome intrusive areas above the LFL cannot be positively ruled out, they can be expected to be a rare occurrence. The presence of flammable gases at concentrations >25% of the LFL in an ex-tank area is therefore expected to be even less of a probability.

Based upon the need to install and remove valve handles if some transfers are to continue and the small percent of the time that flammable gas levels might be above the LFL in the ex-tank pit area, continued installation and removal of the valve handles poses a low risk of causing a flammable gas ignition event.

The risk associated with continuing installation and removal of valve handles is further reduced by performing flammable gas monitoring of the work area prior to and during the activity. This will include monitoring per method [A]. See definition of monitoring methods at the end of this section.

When flammable gas levels reach 25% of the LFL, work ceases as required per the monitoring requirements of this Flammable Gas JCO. The National Fire Protection Association (NFPA 30, 1988) recommends that processes be controlled so that flammable gas concentrations are <25 percent of the LFL, when relying upon vapor space flammability levels to preclude the possibility of an ignition. DOE Order 5480.4 requires Hanford waste tanks to be operated within NFPA guidelines. Thus, a control of <25% of the LFL has been established for performing activities in and around Tank Farm facilities. Because of the unpredictable nature of GREs, it is currently not possible to ensure that 25% of the LFL is never exceeded. Procedures and controls are thus in place to minimize the potential for a tank to exceed 25% of the LFL, and to cease work in areas common with the tank vapor space when the flammable gas concentration exceeds this value. This 25% limit is far below the actual limit at which flammability can occur, and is conservatively chosen to allow for potential measurement errors.

Monitoring is normally performed with a portable CGM. The CGM is calibrated with pentane and reads high by 100% when monitoring for hydrogen in air. For conservatism, no correction factor is applied in the field to the CGM reading when used for monitoring for personnel protection. Thus a 25% of the LFL reading on a CGM is actually 12.5% of the LFL for hydrogen in air, but is treated as if it were 25%. Depending upon the concentration of the flammable gas constituent and oxidants (ammonia, methane, carbon monoxide, nitrous oxide) a 25% LFL CGM reading will be indicative of 12.5% to approximately 20% of the LFL. The response time of a CGM to an increase in flammable gas concentration is not instantaneous. The CGM starts responding to an increase in flammable gas concentrations almost immediately upon the gas reaching the CGM internals. The internal response time for a CGM to reach a 10% of the LFL indication (5% LFL actual for hydrogen in air) when exposed to a 23% of the LFL pentane mixture (equivalent to a 11.5% of the LFL hydrogen in air mixture) ranged from 7 to 12 seconds in a number of informal tests. Time to reach the full 23% test gas indication took 20 to 40 seconds.

If the CGM is drawing a sample out of a tank dome space, the time for the tank vapors to reach the CGM is approximately 26 seconds, based upon the 500 cm^3/min CGM flow and the tubing currently used for flammable gas monitoring. Thus an instantaneous change from 0 to 12.5% of the LFL for hydrogen in air in a tank vapor space (an indicated 25% of the LFL) would not indicate any change at all on a CGM for about 26 seconds. At 26 seconds, the indicated LFL would begin to rise and 33 to 36 seconds after the step change the CGM would indicate about 10% of the LFL. The CGM would indicate 25% of the LFL approximately 45 to 65 seconds after the step change.

If the CGM were being used to sample the pit where these tools are used, the 26 second delay would be reduced to 3 to 6 seconds (due to shorter sample tube lengths and, thus, shorter transport times), and a reading of 10% of the LFL would be noted 10 to 18 seconds after sensing a 25% step increase in the LFL.

A CGM is an acceptable instrument to use for flammable gas monitoring in pits as long as work is halted upon significant increase in the indicated flammable gas levels. An instantaneous step increase in an entire tank dome vapor space concentration from 0 to 100% of the LFL is not realistic due to the large volume of gas which would be required to be released, although localized spots near the waste surface could show a quick step change to >100% of the LFL from relatively small releases of gases from below the waste surface. The risk is very low that a gas stream would be released from the waste surface of a 75 foot diameter tank and enter a 4 inch diameter pit drain directly above without the gas being partially diffused by tank vapors. Since monitoring for flammable gases is done in the pit before installation and removal of the valve handles, the current response time for CGMs is not a significant concern.

There is no readily available substitute for the valve handles. Therefore, the ability to install and remove the existing valve handles is essential for transferring of waste and other basic plant operations. The benefits of the ability to install and remove valve handles must be balanced against the small risk of igniting flammable gas via mechanical sparking.

ITEM CLASSIFICATION: NON DE MINIMUS

ITEM NUMBER: 27

EQUIPMENT: Cover blocks, riser flanges, shield plugs, and tank installed waste intrusive and non waste intrusive equipment items (e.g., thermocouple trees, steel LOWs, pumps, manual tapes, FICs, ENRAFs, radar gauges, heated vapor probes, multiple instrument trees (MITs), corrosion probes, velocity-density temperature trees (VDTTs), water lances, void fraction meter, core sampling drill string, salt well screens, dip tubes, cameras, lights, viscometer, auger sampler)

CATEGORY: Mechanical Spark Potential

USE:

Items are used for various purposes in risers and pits, or are equipment installed or removed in tanks to perform various functions.

APPLICABLE CONTROL NOT MET:	WHEN CONTROL NOT MET:
ICS 2 #1	FG 1 ex-tank FG 1,2 dome intrusive FG 3 dome intrusive (LWD, GWD) FG 2 ex-tank (GWD) Waste Intrusive Regions

DISCUSSION OF FLAMMABLE GAS JCO APPLICABILITY:

These are potential mechanical spark sources during seismic events, large GREs, and during installation, removal, or movement during use of various tools and equipment. Many are made of carbon steel. These items are inserted into or attached to the top of a riser or pit opening. Where required by the Flammable Gas JCO, these items are also bonded. Installation, removal, and use of these items are considered routine operations. The risk of mechanical sparks is minimized by use of practical measures such as controlling the rate of insertion or removal. Monitoring is done during installation, removal, and movement, and these are stopped if required by flammable gas levels.

RISK ACCEPTANCE:

See risk acceptance writeup starting on next page.

IMPACT OF NOT ACCEPTING RISK OF CONTINUED USE:

Facility Group 1 Tanks-Will shut down most pit or riser installation work and halt installation of equipment into tanks.

Facility Group 2 Tanks-Will shut down most pit or riser installation work and halt installation of equipment into tanks.

Facility Group 3 or other Tanks-Will restrict or shut down all waste intrusive installations and removals.

REQUESTED APPROVAL FROM DOE:

Presence of non-spark resistent materials for installed equipment in locations and during activities as listed below. As this portion of the exception applies to the presence of installed equipment, no monitoring is required by this portion of the exception.

Installation and removal or movement during use of equipment fabricated from non-spark resistent materials when practical measures to control mechanical spark potential are applied and while performing flammable gas monitoring controls [A] as appropriate for the location and activity type in:

1) FG 1 tanks ex-tank activities
2) FG 1,2 tanks dome intrusive activities
3) FG 3 tanks dome intrusive (LWD, GWD)
4) FG 2 ex-tank regions (GWD)
5) Waste intrusive regions

Risk Acceptance for Cover Blocks, Flanges, Shield Plugs, Waste Intrusive and Non-Waste Disturbing Equipment.

These items are potential mechanical spark sources due their material. Fabrication of the items from non-sparking materials is not practical or cost effective.

Concern is when a spark occurs coincident with a flammable gas mixture >100% of the LFL. Per Appendix A of this Flammable Gas JCO, vapor space sample results for single-shell tanks indicate that approximately 70 to 90% of the tanks show negligible or nondetectable flammable gas levels during non waste intrusive work. The remaining 10 to 30% of the tanks average 1.2 to 1.5% of the LFL. The highest CGM measurement (7%) recorded to date using the OVM samples equated to approximately 3.5% of the LFL. The highest vapor sample correlates to 2.51% of the LFL. One IMUST tank sampled showed no flammable gas present. The highest recorded organic concentration, 3.8% of the LFL, was found in Tank 241-C-103. Tank 241-C-103 is the only waste tank known to have a significant floating organic layer. Since July 1996, one tank has shown a 10% of the LFL CGM reading (5% of the LFL), and one showed a 13% LFL CGM reading (6.5% LFL) prior to intrusive activities. Actively ventilated tanks would be expected to have low flammable gas levels because of the constant dilution air passing through the tanks. No actively ventilated single-shell tanks have shown flammable gas levels above minimum detectable levels in either the Type 3 or 4 vapors samples or in the special OVM samples taken in these tanks.

The following can be summarized concerning the risk and practical controls for the tools and equipment fabricated from non-spark resistent materials:

1) The use of this equipment is required to perform much of the work in Tank Farms. This includes temperature, pressure and level monitoring, transfers, sampling, and installation of equipment.

2) Flammable gas levels have not been measured in excess of the LFL in the tank dome for any tank except in pre-mitigated Tank 241-SY-101 during one or more GREs. In approximately 80% of the single-shell tanks that have been sampled the flammable gas is below detectable levels. In the remaining 20% of the single-shell tanks the flammable gas is less than 2% of the LFL, except for 2-3 specific readings which have ranged up to 6.5% of the LFL. The presence of flammable gas would only arise in the event of a GRE as steady state releases are managed by ventilation. The coincident occurrence of a spontaneous GRE and a mechanical spark is judged to be a low likelihood event. The likelihood of an induced GRE during waste disturbing operations is not fully quantified but is judged to be more likely than a spontaneous GRE. Flammable concentrations that might result from a small GRE are expected to persist for at most a short period of time as the gases are diluted with the air in the tank dome space.

3) Mechanical sparking is limited to situations where non-spark resistent materials are in motion such that sparks can be created by mechanical impacts or significant friction. These situations are described below.

   a. Motion of installed equipment in the ex-tank or dome intrusive locations might be caused by a seismic event. Specific controls to address a seismic event induced flammable gas deflagration are not included in this JCO. The risk and appropriate additional controls (if any) for this scenario are being addressed in the TWRS FSAR effort.

   b. Motion of equipment installed in waste intrusive locations might be caused by motion of the waste caused by seismic events, large spontaneous or induced GREs, or motion due to the effects of moving waste jets as in the case of operation of a waste mixer pump.

      Significant waste motion was observed during large GREs in Tank 241-SY-101 prior to mitigation. This waste motion caused long length installed equipment (e.g., T/C trees, air lances) to move about with significant velocity causing a concern for GRE induced mechanical sparks. Video surveillance of JCO FG 1 tanks indicates that significant waste and equipment motion does not occur during GREs in these tanks. Therefore, the risk of GRE induced mechanical sparks is judged to be low.

      For unmanned operations that might induce a GRE (e.g., waste transfers, operation of air lift circulators) gas monitoring is not practical. For manned activities, gas monitoring and safe shutdown are applied during the activity as required by this JCO.

      The risk and appropriate additional controls (if any) for the seismic event scenario are being addressed in the TWRS FSAR effort.

      The risks associated with gas releases and coincident mechanical sparks that might result from the operation of a large mixer pump are not yet fully evaluated. Therefore, this exception does not cover the presence of non-spark resistent materials in long length installed equipment that might be moved by the operation of a large mixer pump such that mechanical sparks might result.

c. Motion occurs during the installation of equipment (e.g., as it is lowered into the tank through a riser). Practical measures to reduce the likelihood of a mechanical spark during equipment installation shall be included in equipment design, work packages, or installation procedures when such movement has significant potential to cause mechanical sparks. This can include: limiting insertion speeds, water bathing of equipment, prevention of contact with other non-spark resistent materials by use of collars or bumpers, use of critical lift procedures where appropriate. Gas monitoring during these manned activities is performed as required by this JCO.

d. Motion occurs during the removal of equipment (e.g., as it is raised through a riser). Practical measures to reduce the likelihood of a mechanical spark during equipment removal shall be included in equipment design, work packages, or removal procedures when such movement has significant potential to cause mechanical sparks. This can include: limiting removal speeds, water bathing of equipment, prevention of contact with other non-spark resistent materials by use of collars or bumpers, use of critical lift procedures where appropriate. Gas monitoring during these manned activities is performed as required by this JCO.

e. Motion can occur as part of the operation of equipment (e.g., pushing a drill string/core barrel into the waste, [and through a riser], movement of waste characterization sampling devices such as retained gas samplers, void fraction meters, viscometer, auger sampler as they are moved through the waste). These operations are generally performed manually and are limited to low velocities by the nature of the operation. Practical measures to reduce the likelihood of a mechanical spark during equipment movement shall be included in the work packages and installation procedures when such movement has significant potential to cause mechanical sparks. This can include: limiting speeds, water bathing of equipment, prevention of contact with other non-spark resistent materials by use of collars or bumpers, use of critical lift procedures where appropriate. Gas monitoring during these manned activities is performed as required by this JCO.

The risk associated with continuing use of the tools and equipment is further reduced by performing flammable gas monitoring of the work area prior to and during use. This will include monitoring per method [A]. See definition of monitoring methods at the end of this section.

When flammable gas levels reach 25% of the LFL, work ceases as required per the monitoring requirements of this Flammable Gas JCO. The National Fire Protection Association (NFPA 30, 1988) recommends that processes be controlled so that flammable gas concentrations are <25% of the LFL, when relying upon vapor space flammability levels to preclude the possibility of an ignition. DOE 5480.4 requires Hanford waste tanks to be operated within NFPA guidelines. Thus, a control of <25% of the LFL has been established for performing activities in and around Tank Farm facilities. Because of the unpredictable nature of GREs, it is not possible to ensure that 25% of the LFL is never exceeded. Procedures and controls are thus in place to minimize the potential for a tank to exceed 25% of the LFL, and to cease work in areas common with the tank vapor space when the flammable gas concentration exceeds this value. This 25% limit is far below the actual limit at which flammability can occur, and is conservatively chosen to allow for potential measurement.

Monitoring is normally performed with a portable CGM. The CGM is calibrated with pentane and reads high by 100% when monitoring for hydrogen in air. For conservatism, no correction factor is applied in the field to the CGM reading when used for monitoring for personnel protection. Thus a 25% of the LFL reading on a CGM is actually 12.5% of the LFL for hydrogen in air, but is treated as if it were 25%. Depending upon the concentration of the flammable gas constituent and oxidants (ammonia, methane, carbon monoxide, nitrous oxide) a 25% LFL CGM reading will be indicative of 12.5% to approximately 20% flammable gas mixture. The response time of a CGM to an increase in flammable gas concentration is not instantaneous. The CGM starts responding to an increase in flammable gas concentrations almost immediately upon the gas reaching the CGM internals. The internal response time for a CGM to reach a 10% of the LFL indication (5% LFL actual for hydrogen in air) when exposed to a 23% of the LFL pentane mixture (equivalent to a 11.5% of the LFL hydrogen in air mixture) ranged from 7-12 seconds in a number of informal tests. Time to reach the full 23% test gas indication took 20-40 seconds.

If the CGM is drawing a sample out of a tank dome space, the time for the tank vapors to reach the CGM is approximately 26 seconds, based upon the 500 cm^3/min CGM flow and the tubing currently used for flammable gas monitoring. Thus an instantaneous change from 0 to 12.5% of the LFL for hydrogen in air in a tank vapor space (an indicated 25% of the LFL) would not indicate any change at all on a CGM for about 26 seconds. At 26 seconds, the indicated LFL would begin to rise and 33 to 36 seconds after the step change the CGM would indicate about 10% of the LFL. The CGM would indicate 25% of the LFL approximately 45 to 65 seconds after the step change.

If the CGM was being used to sample the immediate work area, the 26 second delay would not apply, the CGM would start to rise immediately and a reading of 10% of the LFL would be noted 7 to 12 seconds after sensing a 25% step increase in the LFL.

It is not realistic to have an instantaneous step change from 0% of the LFL to 100% of the LFL in an ex-tank area. Therefore, a CGM is an acceptable instrument to use for flammable gas monitoring in these areas as long as work is halted upon significant increase in the indicated flammable gas levels. An instantaneous step increase in an entire tank dome vapor space concentration from 0 to 100% of the LFL also is not realistic due to the large volume of gas which would be required to be released. However, localized spots near the waste surface could show a quick step change to >100% of the LFL from relatively small releases of gases from below the waste surface. The risk is very low that a gas stream would be released from the waste surface of a 75 foot diameter tank and enter a 4 inch diameter riser directly above without the gas being partially diffused by tank vapors. The response time for CGMs is not a concern when monitoring prior to or during use of this equipment.

It is necessary to balance the minimal time at risk and the risk of a mechanical sparking with the environmental and nuclear safety compliance enabled by the use of this equipment.

ITEM CLASSIFICATION: NON DE MINIMIS

ITEM NUMBER: 28, 29

EQUIPMENT: Pressure switches, limit switches and leak detector for salt well pumping Tanks 241-T-104 and 241-BY-109

CATEGORY: Electrical Spark Potential

USE:

Used to detect leaks, ensure proper valve positioning and provide pump pressure detection during salt well pumping.

APPLICABLE CONTROL NOT MET:	WHEN CONTROL NOT MET:
ICS 2 #2	FG 3 dome intrusive (GWD)

DISCUSSION OF FLAMMABLE GAS JCO APPLICABILITY:

The above equipment are items that are currently installed for salt well pumping Tanks 241-T-104 and 241-BY-109. These items are located in the salt well pump pit and although potential spark sources, they would only do so under the following conditions; 1) if the pump or jumper were to develop a leak, 2) a valve were to leak through or not seat properly, 3) high or low pressures were detected in the pump assembly, and 4) if valving were realigned during pumping. The exercising of these instruments results in a low time at risk for sparking. The Flammable Gas JCO ICS #2 requirements are only applicable for these pieces of equipment during salt well pumping or any global waste disturbing activity.

Tank 241-BY-109 is listed as a Facility Group 3 tank in this Flammable Gas JCO.

RISK ACCEPTANCE:

See risk acceptance writeup starting on next page.

IMPACT OF NOT ACCEPTING RISK OF CONTINUED USE:

Facility Group 1 Tanks-N/A

Facility Group 2 Tanks-N/A

Facility Group 3 or other Tanks-Will delay interim stabilization of Tank 241-T-104, potential impact to Tri-Party Agreement milestones and increased radiological exposure to personnel.

REQUESTED APPROVAL FROM DOE:

Continued use of the above equipment with pit monitoring with installed flammable gas monitor and monitoring per method [A] in:

1) Tank 241-T-104 (GWD).
2) Tank 241-BY-109, following approval of Facility Group 3 categorization (GWD).

Risk Acceptance for Tanks 241-T-104 and 241-BY-109 Salt Well Pumping Equipment.

The scope of this discussion is limited to potential electrical spark ignition events from the listed equipment in the Tanks 241-T-104 and 241-BY-109 pump pits. The pressure switches, limit switches and leak detector are installed.

Tank 241-T-104 has been pumped for 7 months prior to its shutdown. Continuous flammable gas monitoring of the pump pit has consistently indicated less than detectible levels of flammable gases (<3% LFL). It is estimated that pumping of this tank will be completed within three months of restart.

Tank 241-BY-109 has been pumped intermittently over the past several years. The highest flammable gas levels seen in the pump pit during the six weeks of pumping commencing September 10, 1996 was <10% of the LFL. During the previous pumping campaign in September 1995 the highest concentration shown in the tank dome space on the installed SHMS cabinet was 12% of the LFL for a two-hour period. The pump pit flammable gas monitor was installed after September 1995. The pump pit flammable gas monitor in Tank 241-BY-109 deenergizes equipment in the pit at 10% of the LFL. It is estimated that pumping of this tank will be completed within three months of restart.

Concern is when a spark occurs coincident with a flammable gas mixture >100% of the LFL. Per Appendix A of this Flammable Gas JCO, vapor space sample results for single-shell tanks indicate that approximately 70-90% of the tanks show negligible or nondetectable flammable gas levels during non waste intrusive work. The remaining 10-30% of the tanks average 1.2-1.5% of the LFL. The highest CGM measurement (7%) recorded using the OVM samples equated to approximately 3.5% of the LFL. The highest vapor sample results obtained via Type B/Type 4 vapor sampling correlates to 2.51% of the LFL. One IMUST tank sampled showed no flammable gas present. The highest recorded organic concentration, 3.8% of the LFL, was found in Tank 241-C-103. Tank 241-C-103 is the only waste tank known to have a significant floating organic layer. Since July 1996, one tank has shown a 10% of the LFL CGM reading (5% of the LFL), and one showed a 13% LFL CGM reading (6.5% LFL) prior to intrusive activities. Actively ventilated tanks would be expected to have low flammable gas levels because of the constant dilution air passing through the tanks. No actively ventilated single-shell tanks have shown flammable gas levels above minimum detectible levels in either the Type 3 or 4 vapors samples or in the special OVM samples taken in these tanks.

The following can be summarized concerning the risk with using the listed equipment:

1) The equipment is essential to the most cost effective and expeditious interim stabilization of Tanks 241-T-104 and 241-BY-109.

2) No flammable gas has been detected in the pump pit throughout the Tank 241-T-104 salt well pumping campaign.

3) Tank 241-T-104 has pumped for 7 months already, with three-months pumping estimated to remain. Flammable gas has been detected at 12% of the LFL in the Tank 241-BY-109 vapor space for a very short period in September 1995.

4) Flammable gas has not been detected above the 10% deenergizing setpoint in the pump pit. Since the pump pit flammable gas monitor was installed.

5) Tank 241-BY-109 has been pumped intermittently for several years, with one month pumping estimated to remain.

The risk associated with continuing use of the equipment is further reduced by continuous flammable gas monitoring of the pit area with the installed pit flammable gas monitor during pumping. In addition, this includes monitoring per method [A]. See definition of monitoring methods at the end of this section.

The design and configuration of the salt well pumping equipment in Tanks 241-T-104 and 241-BY-109 measures flammable gas levels in the pit area and deenergizes all electrical equipment in the pit upon detection of 10% LFL.

Stabilization of Tanks 241-T-104 and 241-BY-109 reduces the chance of an environmental release and is an M-41 Tri-Party Agreement milestone. These benefits must be balanced against the minimal risks of a flammable gas ignition event due to a spark from the pit equipment. The increased risk of using this existing equipment is judged to be minimal if not equivalent due to the short pumping time remaining (approximately three months for Tank 241-T-104 and one month for Tank 241-BY-109) and the use of the continuous flammable gas monitor with automatic deenergization of equipment on detection of 10% LFL. Additionally, modification of this equipment would increase the potential for radiological exposure to the maintenance and operation crews and the potential for a spread of contamination to the environment. It will take an estimated 20 man REM to modify equipment in the Tank 241-BY-109 pump pit to meet the Flammable Gas JCO if this exception is not approved.

ITEM CLASSIFICATION: NON DE MINIMUS

ITEM NUMBER: 30

EQUIPMENT: Fiberglass and Tefzel LOWs

CATEGORY: Static Spark Potential

USE:

Used for determining interstitial liquid levels.

APPLICABLE CONTROL NOT MET:	WHEN CONTROL NOT MET:
ICS 2 #3, ICS 1 #3	FG 2 dome intrusive FG 3 dome intrusive (LWD, GWD) FG 2,3 waste intruding equipment (failed LOWs only)

DISCUSSION OF FLAMMABLE GAS JCO APPLICABILITY:

Liquid observation wells (LOWs) are hollow pipes sealed at the bottom that are inserted into many single-shell tanks for measuring the interstitial liquid level. Measurement is done by lowering a neutron source to the bottom of the LOW and measuring the observed neutron level as the probe is withdrawn. Fiberglass LOWs and Tefzel LOWs are judged to have a negligible potential for causing flammable gas ignition under the applied conditions.

Failed LOWs are waste intruding equipment because of the potential to trap waste gases. A failed LOW is one that has broken or cracked inside the tank and can let waste enter the pipe. Any work inside a known failed LOW requires flammable gas monitoring prior to the start.

RISK ACCEPTANCE:

See risk acceptance writeup starting on next page.

IMPACT OF NOT ACCEPTING RISK OF CONTINUED USE:

Facility Group 1 Tanks-No Impact.

Facility Group 2 Tanks-Removal of the LOWs would result in loss of leak detection capability and therefore cause environmental non-compliance. The risk of removing the LOWs is far greater from cost, ALARA, and lack of level monitoring standpoints, than the risk involved with leaving them in place.

Facility Group 3 or other Tanks-Same as for FG 2 tanks.

REQUESTED APPROVAL FROM DOE:

Continued presence and use of fiberglass and Tefzel LOWs in tanks without flammable gas monitoring:

1) FG 2,3 dome intrusive regions

Continued presence of failed fiberglass and Tefzel LOWs without flammable gas monitoring, or work in a failed fiberglass or Tefzel LOW following flammable gas monitoring control [8] for:

2) FG 2,3 tanks waste intruding equipment

Risk Acceptance for Fiberglass and Tefzel LOWs.

This is an item where environmental compliance must be balanced against the minimal risk associated with flammable gas ignition due to the presence and use of fiberglass or Tefzel LOWs. The LOWs are already installed in the tanks. The cost in personnel, time, waste disposal, and personnel exposure to remove the LOWs must be balanced with the low risk of a flammable gas ignition event due to a spark from a LOW. Steel LOWs can be installed as new ones are needed, but these are not compatible for all proposed LOW monitoring methods.

The RH has been measured to be >50% in 95% of the non-exhausted tanks sampled. This is to be expected since the concentration of water in air in a sealed chamber will eventually reach saturation, and be in equilibrium with the liquid phase. The remaining 5% of the non-exhausted tanks measured between 40-50% RH. The SX Farm exhausted tanks measured between 20-40% RH, except one tank which was 65% RH. Tank 241-C-105 measured between 40-60% RH, and Tank 241-C-106 measured between 50-100% RH. Therefore, for non-exhausted tanks, plastics in dome intrusive regions are expected to be in compliance with the Flammable Gas JCO about 95% of the time. Exhausted Tanks 241-C-105 and 241-C-106 are approximately 50% RH. For the inside of failed LOWs, any concentrated (i.e., non diluted by tank air) waste gases will be at 100% RH because the gases come from waste pockets surrounded by liquid waste. In such pockets the water vapor in the gas would be at equilibrium with the water in the liquid. The gas in failed LOWs will likely be partially mixed with tank vapors, but as most tank vapors have a high RH, the RH in the failed LOWs should be expected to be >50%. There is negligible air flow across LOWs in service to build up a static charge on them.

For use of intact LOWs, a swab is taken of each LOW prior to work inside the pipe; swabbing and monitoring is currently performed weekly. This is done by running a swab up and down the inside of the LOW and monitoring the swab for radioactivity. This is a much more accurate means of detecting a leaking LOW than using flammable gas monitoring. Work is rarely performed inside failed LOWs. The only activity in recent years was in confirming a failed LOW in Tank 241-SX-104. When required, monitoring is conducted per method [B].

The presence and use of fiberglass and Tefzel LOWs is of concern when the LOW has failed such that flammable gas may accumulate and be ignited due to static discharge upon removal of the nonconductive LOW cap. The time at risk is reduced to that time which is required to remove a cap. This time is on the order of seconds. Flammable gas monitoring is not an appropriate control for the routine presence of the LOWs in a tank vapor space as no response actions are available. It is an acceptable risk based upon experience for the LOWs to remain installed in the tanks without monitoring for flammable gases.

ITEM CLASSIFICATION: NON DE MINIMUS

ITEM NUMBER: 31

EQUIPMENT: Continuous Air Sampler (CAS) (SAIC Model #H-810 and H-809V1)

CATEGORY: Electrical Spark Potential

USE:

Used for monitoring for airborne radioactivity

APPLICABLE CONTROL NOT MET:	WHEN CONTROL NOT MET:
ICS 2 #5	FG 1 ex-tank FG 2 ex-tank (GWD)

DISCUSSION OF FLAMMABLE GAS JCO APPLICABILITY:

The CAS uses a 110v sparking motor to drive the vacuum pump which draws the air sample. The unit is not in compliance with the Flammable Gas JCO, as it does not meet the requirements of ICS 2 #2. In most applications, the sampler draws air from areas requiring ICS 2 controls. The unit will be located 18 opening diameters or 15 feet from the tank opening, whichever is less. Plastic hoses will be used to connect the sampler pump to the sampler head located in the worker's breathing space. Use of the plastic hoses is addressed in Item 1. Additionally, continuous monitoring for flammable gas while the unit is operating will be employed. If flammable gas concentration in excess of 10% of the LFL is detected, the unit will be immediately shut off.

RISK ACCEPTANCE:

See risk acceptance writeup starting on next page.

IMPACT OF NOT ACCEPTING RISK OF CONTINUED USE:

Facility Group 1 Tanks-Failure to accept the risk of continued use will shut down all tank intrusive work. All manned activity in ex-tank areas will be cancelled until qualified air samplers which meet requirements can be identified and procured. Essential ex-tank work may be performed only if workers are on breathing air.

Facility Group 2 Tanks-Failure to accept the risk of continued use will shut down all tank intrusive work during global waste disturbing operations. All manned activity in Ex Tank areas during GWD activities will be cancelled until qualified air samplers can be identified and procured. During GWD, essential ex-tank work may be performed only if workers are on breathing air.

Facility Group 3 or other Tanks-No Impact.

REQUESTED APPROVAL FROM DOE:

Continued use when performing flammable gas monitoring controls [A] for CASs in:

1) Ex-tank regions in FG 1 tanks.
2) Ex-tank regions in FG 2 tanks (GWD)

If flammable gas concentrations in excess of 10% of the LFL is detected, the unit will be immediately shut off.

Risk Acceptance for Continuous Air Sampler.

Use of CAS for personnel safety is standard in the nuclear industry. At Hanford, the HANFORD SITE RADIOLOGICAL CONTROL MANUAL, HSRC-1, requires air monitoring when appropriate as one of its basic tenets. Sections 125 and 136 both require evaluation of air spaces. Sections 551 and 555 give more specific requirements for this monitoring.

Concern is when a spark occurs coincident with a flammable gas mixture >100% of the LFL. Per Appendix A of this Flammable Gas JCO, vapor space sample results for single-shell tanks indicate that approximately 70-90% of the tanks show negligible or nondetectable flammable gas levels during non waste intrusive work. The remaining 10-30% of the tanks average 1.2-1.5% of the LFL. The highest CGM measurement (7%) recorded to date using OVM samples equated to approximately 3.5% of the LFL. The highest vapor sample results obtained via Type B/Type 4 vapor sampling correlates to 2.51% of the LFL. One IMUST tank sampled showed no flammable gas present. The highest recorded organic concentration, 3.8% of the LFL, was found in Tank 241-C-103. Tank 241-C-103 is the only waste tank known to have a significant floating organic layer. Since July 1996, one tank has shown a 10% of the LFL CGM reading (5% of the LFL), and one showed a 13% LFL CGM reading (6.5% LFL) prior to intrusive activities. Actively ventilated tanks would be expected to have low flammable gas levels because of the constant dilution air passing through the tanks. No actively ventilated single-shell tanks have shown flammable gas levels above minimum detectible levels in either the Type 3 or 4 vapors samples or in the special OVM samples taken in these tanks.

The following can be summarized concerning the actual risk with using the CAS:

1) Hanford Site radiological controls require use of a CAS for many of the operations in tank farms.

2) Flammable gas levels have not been seen in excess of the LFL in the tank dome space for any tank except in pre-mitigated Tank 241-SY-101 during one or more GREs. In about 80% of the single-shell tanks that have been sampled the LFL is below detectable. In the remaining 20% of the single-shell tanks the LFL is less than 2%, except for 2-3 specific readings which have ranged up to 6.5%. The presence of flammable gases in actively ventilated single-shell and double-shell tanks would be expected to be low most of the time because of the constant dilution air. Therefore, although the presence of flammable gas concentrations in Dome Intrusive areas above the LFL cannot be positively ruled out, they can be expected to be a rare occurrence. The presence of flammable gases at concentrations >25% of the LFL in an ex-tank area is therefore expected to be even less likely.

Based upon the requirement for remote placement of the CAS instrument during work in ex-tank areas, continuous monitoring and shutdown if flammable gas concentration exceeds 10% of the LFL, and the minimal potential for flammable gas concentrations above the LFL in the ex-tank area, the use of the CAS, with the compensatory measures prescribed poses an acceptable risk. This is especially relevant when balanced with the competing safety requirements for the protection of workers during these activities.

When flammable gas levels reach 25% of the LFL, work ceases as required per the monitoring requirements of this Flammable Gas JCO. The National Fire Protection Association (NFPA 30, 1988) recommends that processes be controlled so that flammable gas concentrations are <25 percent of the LFL, when relying upon vapor space flammability levels to preclude the possibility of an ignition. DOE 5480.4 requires Hanford waste tanks to be operated within NFPA guidelines. Thus, a control of <25% of the LFL has been established for performing activities in and around Tank Farm facilities. Because of the unpredictable nature of GREs, it is currently not possible to ensure that 25% of the LFL is never exceeded. Procedures and controls are thus in place to minimize the potential for a tank to exceed 25% of the LFL, and to cease work in areas common with the tank vapor space when the flammable gas concentration exceeds this value. This 25% limit is far below the actual limit at which flammability can occur, and is conservatively chosen to allow for potential measurement errors. For the CAS, the equipment shutdown limit is set more conservatively at 10% of the LFL.

Monitoring is normally performed with a portable CGM. The CGM is calibrated with pentane and reads high by 100% when monitoring for hydrogen in air. For conservatism, no correction factor is applied in the field to the CGM reading when used for monitoring for personnel protection. Thus a 25% of the LFL reading on a CGM is actually 12.5% of the LFL for hydrogen in air, but is treated as if it were 25%. Depending upon the concentration of the flammable gas constituent and oxidants (ammonia, methane, carbon monoxide, nitrous oxide) a 25% LFL CGM reading will be indicative of 12.5% to approximately 20% of the LFL. The response time of a CGM to an increase in flammable gas concentration is not instantaneous. The CGM starts responding to an increase in flammable gas concentrations almost immediately upon the gas reaching the CGM internals. The internal response time for a CGM to reach a 10% of the LFL indication (5% LFL actual for hydrogen in air) when exposed to a 23% of the LFL pentane mixture (equivalent to a 11.5% of the LFL hydrogen in air mixture) ranged from 7 to 12 seconds in a number of informal tests. Time to reach the full 23% test gas indication took 20 to 40 seconds.

If the CGM is drawing a sample out of a tank dome space, the time for the tank vapors to reach the CGM is approximately 26 seconds, based upon the 500 cm^3/min CGM flow and the tubing currently used for flammable gas monitoring. Thus an instantaneous change from 0 to 12.5% of the LFL for hydrogen in air in a tank vapor space (an indicated 25% of the LFL) would not indicate any change at all on a CGM for about 26 seconds. At 26 seconds, the indicated LFL would begin to rise and 33 to 36 seconds after the step change the CGM would indicate about 10% of the LFL. The CGM would indicate 25% of the LFL approximately 45 to 65 seconds after the step change.

If the CGM was being used to sample the immediate work area where a CAS is being used the 26 second delay would not apply, the CGM would start to rise immediately and a reading of 10% of the LFL would be noted 7 to 12 seconds after sensing a 25% step increase in the LFL.

A CGM is an acceptable instrument to use for flammable gas monitoring in dome intrusive or ex-tank regions as long as work is halted upon significant increase in the indicated flammable gas levels. An instantaneous step increase in an entire tank dome vapor space concentration from 0 to 100% of the LFL is not realistic due to the large volume of gas which would be required to be released, although localized spots near the waste surface could show a quick step change to >100% of the LFL from relatively small releases of gases from below the waste surface. The risk is very low that a gas stream would be released from the waste surface of a 75 foot diameter tank and enter a 4 inch diameter riser directly above without the gas being partially diffused by tank vapors. Since monitoring for flammable gases is done in the immediate area when using the CAS, the current response time for CGMs is not a significant concern.

The risk to personnel of internal exposure due to unmonitored airborne radioactivity is a more significant risk than that of a flammable gas ignition event due to a spark from the CAS motor. This competing safety concern requires the monitoring to be performed or the job will be shut down. No Site-approved CASs are currently available that meet the requirements of the Flammable Gas JCO, and initial attempts to identify an intrinsically safe air particulate sampler have failed to identify a substitute.

Monitoring definitions used in the previous sheets are:

[A] Standard monitoring requirements as described in Section 4.4 of this JCO are applicable. The monitoring requirements are graded based on when and where flammable conditions are postulated consistent with the Facility Group assignment, equipment or work locations, and activity or operation type.

[B] For waste intruding equipment activities, perform [A] above. Sampling during waste intrusive activities associated with handling waste intruding equipment is also as specified in [A] above. Monitoring associated with the waste intruding equipment shall include monitoring before any equipment item in the waste intruding equipment vapor space is energized, prior to (or during if necessary) connecting/disconnecting equipment, or prior to working with nonconductive plastic materials.

REFERENCES

See Appendix E, E7.0, "REFERENCES".

This page intentionally left blank.

APPENDIX F
SITEWIDE CONTROLLED MANUAL CROSS-REFERENCE TABLE

This page intentionally left blank.

LIST OF TERMS

BIO	Basis for Interim Operation
CM	controlled manual
FDH	Fluor Daniel Hanford, Inc.
WHC	Westinghouse Hanford Company

This page intentionally left blank.

APPENDIX F
SITEWIDE CONTROLLED MANUAL CROSS-REFERENCE TABLE

Most of the controlled manuals (e.g., WHC-CM-X-XX) referenced in this Basis for Interim Operation (BIO) have been superseded by Fluor Daniel Hanford, Inc. (FDH) procedures (e.g., HNF-PRO-XXX). A cross-reference table is provided in Table F-1 to guide the reader in locating the equivalent current FDH procedure(s). As part of implementation of BIO controls, the references to controlled manuals, as appropriate, will be updated to reflect the current FDH procedures.

The cross-referenced list provided in Table F-1 has been tailored to be specific to this BIO and should not be construed as a complete listing of all Hanford Site FDH procedures. Refer to the intranet web address provided below for a complete cross-referenced listing of Hanford Site procedures.

http://docs.rl.gov/phpp/procedures/crossget.asp

Table F-1. Project Hanford Procedure Cross Reference. (4 sheets)

Controlled manual number	FDH procedure number	FDH procedure title
WHC-CM-1-11	HNF-PRO-110	*Confined Space*
	HNF-PRO-111	*Occupational Medical Qualification and Monitoring*
	HNF-PRO-115	*Hearing Conservation*
	HNF-PRO-119	*Lead Program*
	HNF-PRO-120	*Respiratory Protection Program*
	HNF-PRO-121	*Heat Stress Control*
	HNF-PRO-409	*Exposure Monitoring, Reporting, and Exposure Records Management*
WHC-CM-1-4	HNF-PRO-052	*Corrective Action Management*
WHC-CM-1-5	HNF-PRO-055	*Startup and Restart of Facilities*
	HNF-PRO-056	*Drill Program Policy*
	HNF-PRO-058	*Critique Procedure*
	HNF-PRO-060	*Reporting Occurrences, and Processing Operational Information*
	HNF-PRO-062	*Identifying and Resolving Unreviewed Safety Questions*
	HNF-PRO-063	*Alarm Management Policy*
	HNF-PRO-066	*Electrical Utilities Lock and Tag Program*
	HNF-PRO-067	*Managing Lessons Learned*
WHC-CM-1-8	HNF-PRO-069	*Maintenance Management*
	HNF-PRO-070	*Plant Forces Work Review (Davis-Bacon Act Compliance)*
	HNF-PRO-072	*Plant Instrumentation and Equipment Status Labeling*
WHC-CM-2-14	HNF-PRO-154	*Responsibilities and Procedures, for all Hazardous Material*
	HNF-PRO-156	*Nonradioactive Hazardous Materials/Hazardous Waste (HM/HW) Shipments*
	HNF-PRO-157	*Radioactive Material/Waste Shipments*
	HNF-PRO-158	*Shipping and Receiving in the 1100 Area*
	HNF-PRO-163	*Documentation and Record Keeping*
	HNF-PRO-166	*Transportation Safety Training Requirements*

Table F-1. Project Hanford Procedure Cross Reference. (4 sheets)

Controlled manual number	FDH procedure number	FDH procedure title
WHC-CM-4-2	HNF-PRO-246	*Management Assessment*
	HNF-PRO-261	*Quality Assurance Program Plans*
	HNF-PRO-263	*Qualification and Certification of Inspection and Test Personnel*
	HNF-PRO-265	*Developing and Maintaining S/RIDS*
	HNF-PRO-268	*Control of Purchased Items and Services*
	HNF-PRO-283	*Control of Inspections*
	HNF-PRO-286	*Test Control*
	HNF-PRO-297	*Inspection, Test, and Operating Status*
	HNF-PRO-298	*Nonconforming Item Reporting and Control*
	HNF-PRO-301	*Control of Suspect/Counterfeit Items*
WHC-CM-4-29	HNF-PRO-334	*Criticality Safety General Requirements*
	HNF-PRO-537	*Criticality Safety, Control of Fissionable Material*
	HNF-PRO-538	*Criticality Safety Training*
	HNF-PRO-539	*Criticality Safety Evaluations*
	HNF-PRO-540	*Criticality Prevention Specifications*
	HNF-PRO-541	*Criticality Safety Postings*
	HNF-PRO-542	*Fissionable Material Labeling*
	HNF-PRO-543	*Fissionable Material Storage*
	HNF-PRO-544	*Criticality Plant Configuration Control*
	HNF-PRO-545	*Fissionable Material Packaging and Transportation*
	HNF-PRO-546	*Criticality Alarm System*
	HNF-PRO-547	*Criticality Safety for Firefighting*
	HNF-PRO-548	*Criticality Safety Inspections and Assessments*
	HNF-PRO-549	*Criticality Safety Nonconformance Response*
	HNF-PRO-550	*Criticality or Potential Criticality Accident*
WHC-CM-4-40	HNF-PRO-578	*Hazard Communication*
	HNF-PRO-579	*Carcinogen Control*
	HNF-PRO-580	*Process Safety Management*

Table F-1. Project Hanford Procedure Cross Reference. (4 sheets)

Controlled manual number	FDH procedure number	FDH procedure title
WHC-CM-4-40 (continued)	HNF-PRO-582	*Using Nonionizing Radiation*
	HNF-PRO-583	*Laser Safety*
	HNF-PRO-584	*Bloodborne Pathogens*
	HNF-PRO-587	*Laboratory Safety*
	HNF-PRO-699	*Storing and Handling Chemicals*
WHC-CM-4-41	HNF-PRO-340	*Fire Protection Program Overview*
	HNF-PRO-341	*Fire Protection Policy Statement*
	HNF-PRO-342	*Responsibilities*
	HNF-PRO-344	*Exemptions and Equivalencies*
	HNF-PRO-345	*Fire Protection Corrective Actions*
	HNF-PRO-346	*Fire Protection in Facility Operating Procedures*
	HNF-PRO-347	*Employee Fire Protection Training*
	HNF-PRO-348	*Fire Protection Records*
	HNF-PRO-349	*Fire Protection Design Criteria*
	HNF-PRO-350	*Fire Hazard Analysis Requirements*
	HNF-PRO-351	*System Testing/Inspecting and Maintenance Frequencies*
	HNF-PRO-352	*Fire Protection System Discrepancies*
	HNF-PRO-353	*Fire Protection System Winterization*
	HNF-PRO-354	*Fire Surveillance Requirements*
	HNF-PRO-355	*Portable Heaters*
	HNF-PRO-356	*Controlling Hotwork*
	HNF-PRO-358	*Flammable/Combustible Liquids*
	HNF-PRO-359	*Control of Combustibles*
	HNF-PRO-360	*Construction/Demolition Activities*
	HNF-PRO-361	*Portable Fire Extinguishers*
	HNF-PRO-362	*Non-Emergency Use of Fire Hydrants*
	HNF-PRO-363	*Building Emergency Egress*
	HNF-PRO-365	*Fire Barriers*
	HNF-PRO-368	*Laboratories*
	HNF-PRO-370	*Hazardous Material Storage*

Table F-1. Project Hanford Procedure Cross Reference. (4 sheets)

Controlled manual number	FDH procedure number	FDH procedure title
WHC-CM-4-41 (continued)	HNF-PRO-371	*Disposing of Waste Absorbent Material*
	HNF-PRO-372	*Hanford Fire Department*
	HNF-PRO-373	*Hanford Fire Department Coordination Requirements*
WHC-CM-4-46	*	*
WHC-CM-6-34	N/A	*N/A*
WHC-CM-6-50	N/A	*N/A*
WHC-CM-7-5, Section 3	HNF-PRO-451	*Regulated Substance Management*
WHC-CM-7-5, Section 4	HNF-PRO-452	*NEPA, SEPA, Cultural and Natural Resources*
WHC-CM-7-5, Section 5	HNF-PRO-453	*Environmental Notification and Reporting*
WHC-CM-7-5, Section 6	HNF-PRO-454	*Inactive Waste Sites*
WHC-CM-7-5, Section 7	HNF-PRO-455	*Solid Waste Management*
WHC-CM-7-5, Section 11	HNF-PRO-459	*Environmental Training*
WHC-CM-7-5, Section 14	HNF-PRO-462	*Pollution Prevention*

Notes:
1. All controlled manuals were produced by Westinghouse Hanford Company, Richland, Washington
2. All FDH procedures were produced by Fluor Daniel Hanford Company, Inc., Richland, Washington

CM = controlled manual
FDH = Fluor Daniel Hanford, Inc.
WHC = Westinghouse Hanford Company
N/A = indicates controlled manual has not been directly translated in a FDH procedure.
* = WHC-CM-4-46 is obsolete for current usage because it has been replaced by a series of HNF-PRO-XXX documents. However, WHC-CM-4-46 remains a valid reference for the BIO because it is the source document for risk evaluation guidelines used in the accident analyses.

This page intentionally left blank.

This document was too large to scan as a single document; therefore, it has been divided into smaller sections.

Section 7 of 10

Document Information			
Document #	SD-WM-BIO-001	**Revision**	1
Title	TWRS BASIS FOR INTERIM OPERATION		
Date	10/28/1998		
Originator	Y.G. NOORANI	**Originator Co.**	FDH
Recipient		**Recipient Co.**	
References	ECN-644566		
Keywords	AUTHORIZATION BASIS		
Projects	BIO,TWRS,TFARM,W-320		
Other Information	THIS SECTION CONTAINS CHAPTERS 1 THRU 4 OF VOLUME 4 ADDENDUM 1		

HNF-SD-WM-BIO-001
Revision 1

Tank Waste Remediation System Basis for Interim Operation

Volume IV:
Addendum 1

Prepared by
DE&S Hanford, Inc. for Lockheed Martin Hanford Corporation

Date Published
September 1998

Prepared for the U.S. Department of Energy

FLUOR DANIEL HANFORD, INC.
Richland, Washington

Hanford Management and Integration Contractor for the
U.S. Department of Energy under Contract DE-AC06-96RL13200

Approved for Public Release; Further Dissemination Unlimited

TANK 241-C-106 SLUICING SAFETY ANALYSIS
ADDENDUM 1

This page intentionally left blank.

EXECUTIVE SUMMARY

ES.1 FACILITY BACKGROUND AND MISSION

Public Law 101-510, *National Defense Authorization Act for Fiscal Year 1991*, Section 3137, "Safety Measures for Waste Tanks at Hanford Nuclear Reservation" (known as the Wyden Amendment), mandates that the U.S. Department of Energy develop plans to respond to safety issues associated with the underground waste storage tanks on the Hanford Site. Tank 241-C-106 has been identified as having serious potential for release of high-level waste because of an uncontrolled temperature increase if active cooling is not maintained in the tank.

Ecology, EPA, and DOE, *Hanford Federal Facility Agreement and Consent Order*, is commonly referred to as the Tri-Party Agreement. Milestone M-45-03A of the agreement, "Initiate Sluicing Retrieval of 241-C-106," states "initiate sluicing retrieval of Tank 241-C-106 to resolve the high heat issue and demonstrate waste retrieval." The U.S Department of Energy is taking action to eliminate the safety concern regarding storage of the radiogenic high heat waste in Tank 241-C-106 and to demonstrate a single-shell tank waste retrieval technology.

The proposed action for eliminating the Tank 241-C-106 safety concern, designated as Project W-320, Tank 241-C-106 Sluicing, is the retrieval and transfer of waste from Tank 241-C-106 to double-shell Tank 241-AY-102. Tank 241-AY-102 is designed to safely store high heat wastes.

Project W-320, and related upgrades, subsequently referred to as the Waste Retrieval Sluicing System (WRSS), provides the design, procurement, installation, and testing of equipment as well as the preparation of documentation required to implement the proposed action. The scope of activities covered by this addendum includes presluicing waste transfers, startup support of the Project W-320, sluicing operations, activities through completion of the transfer of the wastes from Tank 241-C-106 to Tank 241-AY-102, and subsequent storage and monitoring of the waste in Tanks 241-AY-102 and 241-C-106.

Per requirements of DOE 5480.21, *Unreviewed Safety Questions*, an Unreviewed Safety Question evaluation (TF-95-0105, *Project W-320, C-106 Sluicing and Waste Retrieval for Storage in AY-102*) has been performed. The Unreviewed Safety Question evaluation determined that U.S. Department of Energy approval of this proposed action is required.

A safety analysis is required to demonstrate conclusively that a safety problem does not exist and to serve as the technical basis for a change to the Authorization Basis. The Waste Retrieval Sluicing System is an operation of limited complexity, limited scope (involving only two tanks), and of limited duration (six months to two years). To satisfy the requirements of documenting a safety analysis in accordance with DOE 5480.23, *Nuclear Safety Analysis Reports*, this safety analysis is prepared per DOE-STD-3009-94, *Preparation Guide for U.S. Department of Energy Nonreactor Nuclear Facility*

Safety Analysis Reports, and is added as an addendum to the main text of HNF-SD-WM-BIO-001, *Tank Waste Remediation System Basis for Interim Operation* (BIO).

ES.2 FACILITY OVERVIEW

Tank 241-C-106, constructed during 1943 and 1944, is a 2.0 million L (530,000 gal) capacity single-shell tank, a high heat tank (greater than 11.7 kW [40,000 Btu/h]), and a watchlist tank that requires the addition of approximately 22,600 L (6000 gal) of cooling water per month to maintain safe storage temperatures.

Tank 241-AY-102, constructed in the late 1960's, has a rated capacity of 3.7 million L (980,000 gal), and is composed of a primary and secondary steel tank. The life-limiting conditions for Tank 241-AY-102, identified through life prediction models, suggest that Tank 241-AY-102 should not fail by through-wall pitting well beyond 2028. The primary tank wall is not expected to be breached until the year 2033 and the tank is not listed as a watchlist tank.

The major items of equipment provided by the WRSS are two nearly identical pump systems, one for delivery of the sluice stream or supernate to Tank 241-C-106 and the other for delivery of slurry to Tank 241-AY-102; a sluicer system; a slurry distributor; interfarm piping to complete a dedicated, closed-loop sluicing system; Tank 241-C-106 heating, ventilating, and air-conditioning system; and modifications to the Tank 241-AY-102 annulus ventilation system.

The WRSS uses the existing tank farm support systems, modified as required to support Project W-320 requirements. Backup for instrument air is not provided. Backup power is provided for the AY Farm and C Farm tank ventilation systems. Backup power for other systems will be provided as determined by the engineering analysis discussed in Section 4.2, "Requirements." Support services in the form of raw water, sanitary water, electrical power, telecommunications, and hoisting hardware are provided. The use of existing septic systems or portable facilities for sanitary sewage will be considered for the personnel using the control trailer.

ES.3 FACILITY HAZARD CLASSIFICATION

An evaluation to determine the WRSS hazard classification was performed. The WRSS is designated Hazard Category 2 as discussed in Section 3.3.2.1, "Hazard Classification."

ES.4 SAFETY ANALYSIS OVERVIEW

The types of events considered for the WRSS hazard analysis were internal events, external events, and natural phenomena events that can cause the uncontrolled release of radioactive or hazardous materials and affect the public, workers, or the environment. Single and multiple failures (i.e., as a

result of equipment and human errors) and common-cause failures were considered to be accident initiators. Sabotage and terrorism events were not considered. The results of the hazard evaluations and accident analyses were then used to identify a subset of hazardous conditions that bound the consequences and provide a quantitative basis for the identification of controls (e.g., structures, systems, and components and Technical Safety Requirements) required to protect the public, workers, and the environment. The list of bounding, representative hazardous conditions becomes the basis for the list of candidate accidents. As a check of the selection process, each hazardous condition is grouped under a candidate accident. If hazardous conditions that cannot be represented by existing candidate accidents remain, additional candidate accidents are identified. Results of the hazard analysis activities were recorded in a hazard analysis database.

The principal bases used for identifying safety structures, systems, and components and Technical Safety Requirements are risk guidelines. The objective is to identify safety structures, systems, and components and Technical Safety Requirements that result in satisfying the risk guidelines and providing Defense-in-Depth.

The results of an assessment of beyond evaluation basis accidents analyzed to provide a perspective of the residual risk associated with tank farm operations is provided in the BIO main text.

ES.5 ORGANIZATIONS

The Hanford Nuclear Facility near Richland, Washington, is managed by the Department of Energy and its contractors. The main text of the BIO contains the description of key Hanford and Tank Waste Remediation organizations and their responsibilities.

ES.6 SAFETY ANALYSIS CONCLUSIONS

The accident analysis reviewed the safety of new structures, systems, and components to ensure the protection of the public, onsite workers, facility workers, and the environment by preventing or mitigating the consequences of representative accidents. The accident analysis established the additional controls required to operate the Tank Waste Remediation System facility modification through preventive and mitigative requirements.

The hazards associated with normal and abnormal operation of the WRSS have been identified and examined in the preliminary hazard analysis. The preliminary hazards analysis provided a comprehensive list of the hazards related to this activity and its related systems and operations, which is contained in Appendix C, "Hazard Evaluation Results." The hazards analysis was performed in accordance with the methodology described in Section 5.2.1, "Methodology" of the BIO main text. Bounding accidents have been analyzed and equipment has been classified as necessary to protect the public, the onsite worker, facility worker, and the environment.

The safety analysis demonstrates that the Waste Retrieval Sluicing System design provides an adequate safety margin that is appropriate to proceed with operation. The correct design requirements have been established through the safety classification process based on the accident analyses. This addendum addresses the risk of WRSS operation and shows the risk to be acceptable.

ES.7 SAFETY ANALYSIS REPORT ORGANIZATION

This addendum is organized in accordance with current U.S. Department of Energy standards. For those chapters where information would be provided about site-wide programmatic controls, the chapters are abbreviated to reference only documents impacted by this modification. Because the details of existing site-wide programs can be found in the BIO main text, descriptions of those programs are omitted in this addendum.

Chapter 3.0, "Hazard Evaluations and Accident Analyses," describes the methodology and presents the results of the hazard and accident analyses performed for the Waste Retrieval Sluicing System components and operations described in Chapter 2.0, "Facility Description." Chapter 3.0 also includes information pertaining to the designation of the facility hazard classification.

Based on the results of the hazard and accident analyses, Safety-Class and Safety-Significant structures, systems, and components; Technical Safety Requirements; and additional Defense-in-Depth controls are identified for protection of the public, onsite workers, and facility workers. Chapter 4.0, "Safety Structures, Systems, and Components," provides details of the safety structures, systems, and components identified and Chapter 5.0, "Derivation of Technical Safety Requirements," provides the derivation basis of Technical Safety Requirements. Design and operational features required specifically to protect the environment from uncontrolled releases of radioactive and hazardous material are also identified in Chapter 5.0.

ES.8 REFERENCES

DOE 5480.21, 1991, *Unreviewed Safety Questions*, Change 0, U.S. Department of Energy, Washington, D.C.

DOE 5480.23, 1994, *Nuclear Safety Analysis Reports*, Change 1, U.S. Department of Energy, Washington, D.C.

DOE-STD-3009-94, 1994, *Preparation Guide for U.S. Department of Energy Nonreactor Nuclear Facility Safety Analysis Reports*, U.S. Department of Energy, Washington, D.C.

Ecology, EPA, and DOE, 1994, *Hanford Federal Facility Agreement and Consent Order*, as amended, Washington State Department of Ecology, U.S. Environmental Protection Agency, and U.S. Department of Energy, Olympia, Washington.

HNF-SD-WM-BIO-001, 1998, *Tank Waste Remediation System Basis for Interim Operation*, Rev. 1, Fluor Daniel Hanford, Inc., Richland, Washington.

Public Law 101-510, *National Defense Authorization Act for Fiscal Year 1991*, Section 3137, "Safety Measures for Waste Tanks at Hanford Nuclear Reservation."

TF-95-0105 (Unreviewed Safety Question Evaluation Tracking Number), 1995, *Project W-320, C-106 Sluicing and Waste Retrieval for Storage in AY-102*, Rev. 0, Westinghouse Hanford Company, Richland, Washington.

This page intentionally left blank.

CONTENTS

1.0 SITE CHARACTERISTICS 1-1
1.1 INTRODUCTION 1-1
1.2 REQUIREMENTS 1-1
1.3 SITE DESCRIPTION 1-1
1.4 ENVIRONMENTAL DESCRIPTION 1-1
1.5 NATURAL PHENOMENA THREATS 1-1
1.6 EXTERNAL MAN-MADE THREATS 1-2
1.7 NEARBY FACILITIES 1-2
1.8 VALIDITY OF EXISTING ENVIRONMENTAL ANALYSES 1-3
1.9 REFERENCES 1-3

2.0 FACILITY DESCRIPTION 2-1
2.1 INTRODUCTION 2-1
2.1.1 Safety Issues Background 2-2
2.1.2 Change to Facility Authorization Basis 2-2
2.2 REQUIREMENTS 2-3
2.3 FACILITY OVERVIEW 2-3
2.3.1 Sluice and Slurry Pump Systems 2-3
2.3.2 Sluicer System 2-3
2.3.3 Slurry Distributor (Tank 241-AY-102) 2-4
2.3.4 Interfarm Piping 2-4
2.3.5 Tank 241-C-106 Sluicing Ventilation System 2-4
2.3.6 Tank 241-AY-102 Ventilation System 2-5
2.3.7 Seismic Shutdown System 2-6
2.4 FACILITY STRUCTURES 2-6
2.4.1 Systems Descriptions 2-6
2.4.2 Support Systems 2-22
2.5 PROCESS DESCRIPTION 2-24
2.5.1 Sluicing Preparations 2-25
2.5.2 WRSS Operations 2-26
2.5.3 Supporting Operations 2-43
2.5.4 Past Practice Sluicing Lessons Learned 2-43
2.5.5 Chemical Compatibility 2-47
2.6 SAFETY SUPPORT SYSTEMS 2-48
2.6.1 Fire Protection Systems 2-48
2.6.2 Ventilation Exhaust Radiation Monitoring System 2-48
2.6.3 WRSS System Interlocks 2-48
2.6.4 System Controller and Interlocks 2-49
2.7 UTILITY DISTRIBUTION SYSTEMS 2-49
2.7.1 Process and Instrument Air 2-49
2.7.2 Electrical Power 2-49
2.7.3 Water Supply 2-50
2.7.4 Compressed Air System 2-50
2.8 AUXILIARY SYSTEMS AND SUPPORT FACILITIES 2-50
2.9 REFERENCES 2-50

3.0 HAZARD EVALUATIONS AND ACCIDENT ANALYSES 3-1
3.1 INTRODUCTION 3-1
3.2 REQUIREMENTS 3.2-1
3.3 HAZARD ANALYSIS 3.3-1

CONTENTS (cont)

3.3.1 Methodology 3.3-1
3.3.2 Hazard Analysis Results 3.3.2-1
3.4 ACCIDENT ANALYSIS 3.4-1
3.4.1 Methodology 3.4.1-1
3.4.2 Evaluation Basis Accidents 3.4.2-1
3.4.2.1 Criticality 3.4.2.1-1
3.4.2.2 High-Efficiency Particulate Air Filter Failure Due to Exposure to High Pressure or High Temperature 3.4.2.2-1
3.4.2.3 Unfiltered Release 3.4.2.3-1
3.4.2.4 Fire in Contaminated Area 3.4.2.4-1
3.4.2.5 Caustic Spray Leak 3.4.2.5-1
3.4.2.6 Tank Failure Caused by Excessive Loads . 3.4.2.6-1
3.4.2.7 Tank Failure Caused by Excessive Vacuum 3.4.2.7-1
3.4.2.8 Flammable Gas Deflagration 3.4.2.8-1
3.4.2.9 Organic Solvent Fire 3.4.2.9-1
3.4.2.10 In-Tank Fuel Fire/Deflagration 3.4.2.10-1
3.4.2.11 Tank Bump 3.4.2.11-1
3.4.2.12 Liner Breach Caused by Steam Between the Steel Liner and Concrete Shell in Tank 241-C-106 . . . . . 3.4.2.12-1
3.4.2.13 Subsurface Leak Remaining Subsurface . 3.4.2.13-1
3.4.2.14 Subsurface Leak Resulting in a Pool . . 3.4.2.14-1
3.4.2.15 Surface Leak Resulting in a Pool . . . 3.4.2.15-1
3.4.2.16 Spray Leak from Structure 3.4.2.16-1
3.4.2.17 Spray Leak from an Underground Waste Transfer Line 3.4.2.17-1
3.4.2.18 Natural Phenomena 3.4.2.18-1
3.4.3 Beyond Evaluation Basis Accidents 3.4.3-1
3.5 REFERENCES 3.5-1

4.0 SAFETY STRUCTURES, SYSTEMS, AND COMPONENTS 4-1
4.1 INTRODUCTION 4-1
4.2 REQUIREMENTS 4-1
4.3 SAFETY-CLASS STRUCTURES, SYSTEMS, AND COMPONENTS 4-2
4.3.1 Annulus Ventilation System (Tank 241-AY-102) 4-2
4.3.2 Primary Tank Ventilation System (241-AY-102 & 241-C-106) 4-3
4.3.3 Primary Tank Leak Detection System (241-AY-102) 4-6
4.3.4 Transfer Line Pipe-in-Pipe Encasement 4-7
4.3.5 Transfer Leak Detection Systems 4-8
4.3.6 Transfer System Covers 4-9
4.3.7 Stack Continuous Air Monitor and Interlock to Exhaust Fan 4-10
4.4 SAFETY-SIGNIFICANT STRUCTURES, SYSTEMS, AND COMPONENTS 4-11
4.4.1 Stack Continuous Air Monitor Interlocks 4-11
4.4.2 Tank Level Detection System 4-12

CONTENTS (cont)

4.4.3 Backflow Preventers 4-13
4.5 REFERENCES 4-13

5.0 DERIVATION OF TECHNICAL SAFETY REQUIREMENTS. 5-1
5.1 INTRODUCTION 5-1
5.2 REQUIREMENTS 5-2
5.3 TECHNICAL SAFETY REQUIREMENTS COVERAGE 5-2
5.3.1 Summary 5-2
5.3.2 Criteria 5-2
5.3.3 Safety Structures, Systems, and Components Not Provided With Explicit Technical Safety Requirement Coverage 5-4
5.4 DERIVATION OF FACILITY MODES 5-4
5.4.1 Operational Modes 5-4
5.4.2 Minimum Staffing Levels 5-5
5.5 TECHNICAL SAFETY REQUIREMENT DERIVATION 5-5
5.5.1 Level of Control Criteria 5-6
5.5.2 LCO 3.1.1—Transfer System Covers and Entry Doors . . . 5-8
5.5.3 LCO 3.1.3—Transfer Leak Detection Systems 5-8
5.5.4 LCO 3.1.4—Ventilation Stack Continuous Air Monitor Interlock Systems 5-9
5.5.5 LCO 3.2.1—Double-Shell Tank and Aging Waste Facility Tank Ventilation Systems 5-10
5.5.6 LCO 3.2.2—Single-Shell Tank Ventilation Systems-Active 5-11
5.5.7 LCO 3.2.6—Primary Tank Leak Detection Systems 5-11
5.5.8 LCS/LCO 3.3.1—Single-Shell Tank Waste Temperature Controls 5-12
5.5.9 LCS/LCO 3.3.2—Double-Shell Tank and Aging Waste Facility Tank Waste Temperature Controls 5-13
5.5.10 LCO 3.3.3-Tank 241-AY-102 Annulus Ventilation System 5-14
5.5.11 AC 5.7—Nuclear Criticality Safety 5-15
5.5.12 AC 5.9—Flammability Controls 5-15
5.5.13 AC 5.10—Ignition Controls 5-16
5.5.14 AC 5.11—Flammable Gas Monitoring Controls 5-17
5.5.15 AC 5.12—Transfer Controls 5-18
5.5.16 AC 5.13—Encasement Seal Loop Controls 5-20
5.5.17 AC 5.14—Emergency Preparedness 5-20
5.5.18 AC 5.16—Dome Loading Controls 5-21
5.5.19 AC 5.17—Excavation Controls 5-21
5.5.20 AC 5.18—High-Efficiency Particulate Air Filter Controls 5-22
5.5.21 AC 5.19—Process Instrumentation and Measuring and Test Equipment 5-22
5.5.22 AC 5.20—Transfer Pump Administrative Lock Controls 5-23

CONTENTS (cont)

5.5.23 AC 5.22—Transfer System Cover Removal Controls 5-24
5.5.24 AC 5.23—Caustic Transfer Controls 5-24
5.5.25 AC 5.25—Ventilation Controls 5-24
5.5.26 AC 5.26—Tank 241-C-106 Waste Temperature Controls . . 5-25
5.6 DESIGN FEATURES 5-26
5.6.1 Waste Retrieval Sluicing System 5-27
5.7 INTERFACES WITH TECHNICAL SAFETY REQUIREMENTS FROM OTHER FACILITIES 5-27
5.8 REFERENCES 5-28

6.0 PREVENTION OF INADVERTENT CRITICALITY 6-1
6.1 REQUIREMENTS 6-1
6.2 FACILITY IMPLEMENTATION 6-1
6.3 CRITICALITY CONCERNS 6-1
6.4 CRITICALITY CONTROLS 6-1
6.5 CRITICALITY PROTECTION PROGRAM 6-1
6.6 CRITICALITY INSTRUMENTATION 6-1
6.7 REFERENCES 6-1

7.0 RADIATION PROTECTION 7-1
7.1 INTRODUCTION 7-1
7.2 REQUIREMENTS 7-1
7.3 PROJECT IMPLEMENTATION 7-1
7.4 REFERENCES 7-1

8.0 HAZARDOUS MATERIAL PROTECTION 8-1
8.1 INTRODUCTION 8-1
8.2 PROJECT IMPLEMENTATION 8-1
8.3 REFERENCE 8-1

9.0 RADIOACTIVE AND HAZARDOUS WASTE MANAGEMENT 9-1
9.1 INTRODUCTION 9-1
9.2 PROJECT IMPLEMENTATION 9-1
9.3 REFERENCE 9-1

10.0 INITIAL TESTING, IN-SERVICE SURVEILLANCE, AND MAINTENANCE 10-1
10.1 INTRODUCTION 10-1
10.2 REQUIREMENTS 10-1
10.3 TESTING PROGRAM 10-2
10.3.1 Acceptance Testing 10-2
10.3.2 Pre-Operational Testing 10-3
10.4 PROCEDURES 10-3
10.5 IN-SERVICE SURVEILLANCE PROGRAM 10-3
10.5.1 Provisions for Testing and Calibrations 10-3
10.5.2 Control and Calibration of Measuring and Test Equipment 10-4
10.5.3 Training of Personnel Performing Surveillance 10-4
10.6 MAINTENANCE PROGRAM 10-4
10.7 REFERENCES 10-4

CONTENTS (cont)

11.0 OPERATIONAL SAFETY 11-1
11.1 INTRODUCTION 11-1
11.2 REQUIREMENTS 11-1
11.3 PROJECT IMPLEMENTATION 11-1
11.4 REFERENCES 11-2

12.0 PROCEDURES AND TRAINING 12-1
12.1 INTRODUCTION 12-1
12.2 PROJECT IMPLEMENTATION 12-1
12.3 REFERENCES 12-1

13.0 HUMAN FACTORS 13-1
13.1 REQUIREMENTS 13-1
13.2 PROJECT IMPLEMENTATION 13-1
13.3 REFERENCE 13-1

14.0 QUALITY ASSURANCE 14-1
14.1 INTRODUCTION 14-1
14.2 REQUIREMENTS 14-1
14.3 TANK WASTE REMEDIATION SYSTEM QUALITY ASSURANCE PROGRAM AND ORGANIZATION 14-1
14.4 QUALITY IMPROVEMENT 14-2
14.5 DOCUMENTS AND RECORDS 14-2
14.6 QUALITY ASSURANCE PERFORMANCE 14-2
14.6.1 Work Processes 14-2
14.6.2 Design 14-2
14.6.3 Procurement 14-3
14.6.4 Inspection and Testing for Acceptance 14-3
14.6.5 Independent and Management Assessment 14-3
14.6.6 Training and Qualifications 14-3
14.7 REFERENCES 14-4

15.0 EMERGENCY PREPAREDNESS PROGRAM 15-1

16.0 PROVISIONS FOR DECONTAMINATION AND DECOMMISSIONING 16-1
16.1 INTRODUCTION 16-1
16.2 REQUIREMENTS 16-1
16.3 DESCRIPTION OF CONCEPTUAL PLANS 16-1
16.4 REFERENCES 16-2

17.0 MANAGEMENT, ORGANIZATION, AND INSTITUTIONAL SAFETY PROVISIONS . . . 17-1
17.1 INTRODUCTION 17-1
17.2 REQUIREMENTS 17-1
17.3 PROJECT IMPLEMENTATION 17-1
17.4 REFERENCES 17-1

APPENDIXES

A HAZARD TOPOGRAPHY . . . . . A-i

B REPRESENTATIVE/ANALYZED ACCIDENTS . . . . . B-i

C HAZARD EVALUATION RESULTS . . . . . C-i

D CONTROL ALLOCATION TABLES . . . . . D-i

LIST OF FIGURES

2-1 Tank 241-C-106 Waste Retrieval Sluicing System Tank and Transfer Line Arrangement Diagram F2-1

2-2 Tank 241-C-106 Waste Retrieval Sluicing System Equipment Arrangement. F2-2

2-3 Design of Single-shell Tank 241-C-106 (530,000 gal) F2-3

2-4 Tank 241-C-106 Cross-Sectional View F2-4

2-5 Tank 241-C-106 Waste Retrieval Sluicing System Ventilation Flow Diagram F2-5

2-6 Tank 241-AY-102 Cross-Sectional View. F2-6

2-7 Aging Waste Facility Primary and Backup Ventilation System (241-A-702) F2-7

2-8 Annulus Ventilation System Tank 241-AY-102 . . . . . F2-9

2-9 241-AZ-702 Ventilation Upgrade System F2-10

2-10 Tank 241-C-106 Waste Retrieval Sluicing Sluicer Assembly Arrangement Diagram F2-11

LIST OF TABLES

2-1 Tank 241-C-106 Existing Instrumentation Signals T2-1

2-2 Tank 241-AY-102 Existing Instrumentation Signals T2-1

2-3 C-Farm Ventilation System Interlocks T2-2

2-4 C-Farm Submersible Pump Shutdown Interlocks T2-3

2-5 C-Farm Booster Pump Shutdown Interlocks T2-4

2-6 AY-Farm Submersible Pump Shutdown Interlocks T2-5

2-7 AY-Farm Booster Pump Shutdown Interlocks T2-6

3.3.2-1 Project W-320 Hazards Identification 3.3.2-5

3.3.2-2 Candidate Accidents Versus Analyzed Accidents Used for WRSS Analysis 3.3.2-6

3.3.2-3 Accident Analysis Sections 3.3.2-8

3.3.2-4 Safety SSCs and TSRs and Defense-in-Depth Controls for Representative Accidents 3.3.2-9

3.4.1-1 Maximum Sample Activity Concentrations for Tank Farms Waste (based on the 100% inventory bounding activity concentrations) 3.4.1-5

3.4.1-2 Project W-320 Analysis Liquid/Solid Ratios 3.4.1-6

3.4.1-3 Unit Liter Doses Used in the Waste Retrieval Sluicing System Analyses 3.4.1-6

3.4.1-4 Project W-320 Analysis Composite Unit Liter Doses 3.4.1-7

3.4.1-5 Tank Waste Liquids and Solids Analyte Concentrations (Revised) 3.4.1-8

3.4.1-6 Headspace Gas Composite Concentrations 3.4.1-10

3.4.1-7 Composite Sum-of-Fractions Values Used in Project W-320 Analyses. 3.4.1-11

3.4.2.1-1 Technical Safety Requirement Control for Nuclear Criticality Accident 3.4.2.1-5

3.4.2.2-1 Summary of Consequences and Frequencies for Filter Failure Due to High Temperature Without Controls . . . 3.4.2.2-6

LIST OF TABLES (Cont'd)

3.4.2.2-2 Summary of Consequences and Frequencies for Filter Failure Due to High Temperature With Controls 3.4.2.2-7

3.4.2.2-3 Safety Structures, Systems, and Components for High-Efficiency Particulate Air Filter Failure 3.4.2.2-8

3.4.2.2-4 Technical Safety Requirement Controls for High-Efficiency Particulate Air Filter Failure 3.4.2.2-9

3.4.2.2-5 Defense-In-Depth Controls for High-Efficiency Particulate Air Filter Failure 3.4.2.2-10

3.4.2.2-6 Summary of Consequences for Filter Failure Due to High Pressure Without Controls 3.4.2.2-11

3.4.2.3-1 Safety Structures, Systems, and Components for Unfiltered Releases 3.4.2.3-5

3.4.2.3-2 Technical Safety Requirement Control for Unfiltered Releases 3.4.2.3-5

3.4.2.3-3 Defense-in-Depth Controls for Unfiltered Releases . . . 3.4.2.3-5

3.4.2.4-1 Fire in a Contaminated Area Radiological Consequences 3.4.2.4-3

3.4.2.4-2 Fire in a Contaminated Area Toxicological Consequences 3.4.2.4-3

3.4.2.4-3 Summary of Consequences and Frequencies for Fire in a Contaminated Area Without Controls 3.4.2.4-4

3.4.2.4-4 Technical Safety Requirement Controls for Fire in Contaminated Area 3.4.2.4-5

3.4.2.4-5 Defense-In-Depth Controls for Potential Fire in Contaminated Area 3.4.2.4-6

3.4.2.5-1 Qualitative Consequences of a Caustic Spray Leak Assuming No Controls 3.4.2.5-4

3.4.2.5-2 Technical Safety Requirement Control for Caustic Spray Leak 3.4.2.5-5

3.4.2.5-3 Defense-in-Depth Controls for Caustic Spray Leaks . . . 3.4.2.5-6

3.4.2.6-1 Consequences of a Load Drop Assuming No Controls . . . 3.4.2.6-6

3.4.2.6-2 Technical Safety Requirement Control for Load Drops 3.4.2.6-7

LIST OF TABLES (Cont'd)

3.4.2.6-3 Defense-in-Depth Controls for Load Drops 3.4.2.6-8

3.4.2.8-1 Safety Structures, Systems, and Components for Flammable Gas Deflagrations 3.4.2.8-10

3.4.2.8-2 Technical Safety Requirement Controls for Flammable Gas Deflagrations 3.4.2.8-11

3.4.2.8-3 Defense-in-Depth Controls for Flammable Gas Deflagrations 3.4.2.8-12

3.4.2.9-1 Summary of Consequences and Frequencies for Organic Solvent Fire Without Controls 3.4.2.9-9

3.4.2.9-2 Summary of Consequences and Frequencies for Organic Solvent Fire With Controls 3.4.2.9-9

3.4.2.9-3 Technical Safety Requirement Controls for Organic Solvent Fires 3.4.2.9-10

3.4.2.9-4 Defense-in-Depth Controls for Organic Solvent Fire . . 3.4.2.9-11

3.4.2.11-1 Consequences of a Tank Bump Assuming No Controls . . . 3.4.2.11-7

3.4.2.11-2 Safety Structures, Systems, and Components for Tank Bumps 3.4.2.11-8

3.4.2.11-3 Technical Safety Requirement Controls for Tank Bumps 3.4.2.11-9

3.4.2.11-4 Defense-in-Depth Controls for Tank Bumps 3.4.2.11-11

3.4.2.12-1 Consequences of a Liner Breach Assuming No Controls 3.4.2.12-6

3.4.2.12-2 Technical Safety Requirement Controls for Liner Breaches 3.4.2.12-7

3.4.2.12-3 Defense-in-Depth Controls for Liner Breaches. 3.4.2.12-8

3.4.2.13-1 Summary Consequences and Frequencies for a Subsurface Leak Remaining Subsurface Without Controls 3.4.2.13-5

3.4.2.13-2 Summary Consequences and Frequencies for a Subsurface Leak Remaining Subsurface With Controls 3.4.2.13-5

3.4.2.13-3 Safety Structures, Systems, and Components for Subsurface Leaks Remaining Subsurface 3.4.2.13-6

LIST OF TABLES (Cont'd)

3.4.2.13-4 Technical Safety Requirement Controls for Potential Subsurface Leaks Remaining Subsurface 3.4.2.13-7

3.4.2.13-5 Defense-in-Depth Controls for Subsurface Leaks Remaining Subsurface 3.4.2.13-8

3.4.2.14-1 Summary of Consequences and Frequencies for Subsurface Leak Resulting in a Pool without Controls 3.4.2.14-5

3.4.2.14-2 Summary of Consequences and Frequencies for Subsurface Leak Resulting in a Pool with Controls 3.4.2.14-5

3.4.2.14-3 Safety Structures, Systems, and Components for Subsurface Leaks Resulting in Pools 3.4.2.14-6

3.4.2.14-4 Technical Safety Requirement Controls for Subsurface Leaks Resulting in Pools 3.4.2.14-7

3.4.2.14-5 Defense-in-Depth Controls for Subsurface Leaks Resulting in Pools 3.4.2.14-8

3.4.2.15-1 Safety Structures, Systems, and Components for Surface Leak Resulting in Pool 3.4.2.15-2

3.4.2.15-2 Technical Safety Requirement Controls for Surface Leak Resulting in Pool 3.4.2.15-3

3.4.2.15-3 Defense-in-Depth Controls for Surface Leak Resulting in Pool 3.4.2.15-4

3.4.2.16-1 Summary of Consequences and Frequencies Without Controls 3.4.2.16-8

3.4.2.16-2 Summary of Consequences and Frequencies With Controls 3.4.2.16-8

3.4.2.16-3 Safety Structures, Systems, and Components for Spray Leaks 3.4.2.16-9

3.4.2.16-4 Technical Safety Requirement Controls for Spray Leaks 3.4.2.16-10

3.4.2.16-5 Defense-in-Depth Controls for Transfer System Spray Leaks 3.4.2.16-11

LIST OF TABLES (Cont'd)

3.4.2.17-1 Technical Safety Requirement Controls for Spray Leak from Underground Waste Transfer Lines 3.4.2.17-3

3.4.2.17-2 Defense-in-Depth Controls for Spray Leak from Underground Waste Transfer Lines 3.4.2.17-4

4-1 Safety-Class Structures, Systems, and Components T4-1

4-2 Safety-Significant Structures, Systems, and Components T4-2

5-1 Hazard and Accident Analyses and Technical Safety Requirement Cross-Reference T5-1

5-2 BIO Addendum Chapter and Administrative Control Technical Safety Requirement Cross-Reference T5-8

CHAPTER 1.0
SITE CHARACTERISTICS

This page intentionally left blank.

CHAPTER 1.0
SITE CHARACTERISTICS

CONTENTS

1.0 SITE CHARACTERISTICS 1-1
1.1 INTRODUCTION 1-1
1.2 REQUIREMENTS 1-1
1.3 SITE DESCRIPTION 1-1
1.4 ENVIRONMENTAL DESCRIPTION 1-1
1.5 NATURAL PHENOMENA THREATS 1-1
1.6 EXTERNAL MAN-MADE THREATS 1-2
1.7 NEARBY FACILITIES 1-2
1.8 VALIDITY OF EXISTING ENVIRONMENTAL ANALYSES 1-3
1.9 REFERENCES 1-3

LIST OF TERMS

AC	Administrative Control
ALARA	As Low As Reasonably Achievable
ALC	air lift circulator
AWF	Aging Waste Facility
BIO	Basis for Interim Operation
BPE	barometric pressure evaluation
CAM	continuous air monitor
CCF	Common Cause Failure
CCTV	closed circuit television
COB	cleanout boxes
CPS	Criticality Prevention Specification
CRN	crane operations
CRT	cathode ray tube
CSER	Criticality Safety Evaluation Report
CVR	Coverblock Installation and Removal
DACS	Digital Alarm Control System
DOE	U.S. Department of Energy
DOT	Department of Transportation
DST	double-shell tank
EPA	U. S. Environmental Protection Agency
FGEAB	Flammable Gas Equipment Advisory Board
GPM	gallons per minute
GRE	gas release event
HAS	hazards assessment
HASP	Tank Farms Health and Safety Plan
HazOp	Hazard and Operability Study
HEGA	high-efficiency gas adsorber
HEME	high-efficiency mist eliminator
HEMF	high-efficiency metal filter
HEPA	high-efficiency particulate air (filter)
HLW	high-level waste
HMP	Hazardous Material Protection
HVAC	heating, ventilating, and air conditioning
ITK	In-Tank Equipment Installation, Operation and Removal
JCO	Justification for Continued Operation
LCS	Limiting Control Setting
LFL	lower flammability limit
MAR	material at risk
NA	not applicable
NC	no controls
NCAW	neutralized current acid waste
NDE	nondestructive examination
NFC	net flow computer
NHW	neutralizes high-level waste
NP	natural phenomena
OAC	Official Acceptance of Construction
OGT	Overground Transfer
OSR	Operational Safety Requirement
OTP	Operational Test Procedure

LIST OF TERMS (cont)

PCP	Process Control Plan
PE	potentially present elsewhere in/adjacent to facility
PHA	preliminary hazards analysis
PNNL	Pacific Northwest National Laboratory
PT	potentially present in the facility
PUREX	Plutonium Uranium Extraction (facility)
QAPP	quality assurance project plan
RCRA	*Resource Conservation and Recovery Act of 1976*
RL	U.S. Department of Energy, Richland Operations Office
RMW	radioactive mixed waste
RP	radiation protection
SARA	Superfund Amendments and Reauthorization Act
SC	Safety-Class
SFF	sniffing (gas monitoring)
SHMS	Standard Hydrogen Monitoring System
SL	safety limit
SOF	sum-of-fraction
SS	safety-significant
SSC	structure, system, and component
SST	single-shell tank
SWP	special work procedure
TC	thermocouple
TOC	total organic carbon
TRU	transuranic
TSF	Tank Farm Waste Transfer Syphoning Events
TSR	Technical Safety Requirement
TWRS	Tank Waste Remediation System
VEH	vehicle operations
VERMS	Ventilation Exhaust Radiation Monitoring System
WAC	Washington Administrative Code
WRSS	Waste Retrieval Sluicing System
ULD	Unit liter dose
USQ	Unreviewed Safety Question

This page intentionally left blank.

1.0 SITE CHARACTERISTICS

1.1 INTRODUCTION

The objective of this chapter is to describe the Hanford Site characteristics as applicable to the Project W-320, Tank 241-C-106 Sluicing activities at the Tank Waste Remediation System facilities. The Waste Retrieval Sluicing System (WRSS) is located in the 200 East Area of the Hanford Site.

1.2 REQUIREMENTS

The site characterization requirements for support of safety analysis and design applicable to WRSS are provided in DOE 4700.1, *Project Management System*, and Hanford Plant Standard HPS-SDC-4.1, *Standard Architectural-Civil Design Criteria: Design Loads for Facilities.*

1.3 SITE DESCRIPTION

This section addresses the site boundary and site location with respect to the WRSS. For site geography, general site description, and demography see Appendix C, Section C1.3 "Site Description," of HNF-SD-WM-BIO-001, *Tank Waste Remediation System Basis for Interim Operation* (BIO) main text.

The WRSS calculation of radiological and toxicological consequences to the maximum offsite individual assumes the maximum Site boundary at the near bank of the Columbia River at a distance of either 8,760 m (28,740 ft) to the north or 8,690 m (28,510 ft) to the north-northwest depending on the duration of the release.

1.4 ENVIRONMENTAL DESCRIPTION

The meteorological data used to calculate atmospheric dispersion coefficients for postulated WRSS accidents is nine-year averaged data (1983-1991) from the Hanford meteorology tower in the 200 Area. Calculation of atmospheric dispersion coefficients is detailed in WHC-SD-WM-SARR-016, *Tank Waste Compositions and Atmospheric Dispersion Coefficients for Use in Safety Analysis Consequence Assessments.* Meteorological data was not examined explicitly by the project.

1.5 NATURAL PHENOMENA THREATS

A natural phenomena threat is an act of nature that poses a threat to workers, the public, or the environment by having the potential to cause damage to systems, structures, or components. Evaluation of natural phenomena

effects to WRSS activities is based on work documented in Section 3.4.2.18, "Natural Phenomena" of this addendum. Natural phenomena threats considered potential WRSS accident initiators include the following:

- Earthquake
- High wind
- Dust storm
- Flooding
- Rain
- Snow
- Volcanic activity
- Lightning
- Range fire
- Extreme cold temperatures.

Natural phenomena were considered to initiate a sequence of events that could result in the release of hazardous materials from a tank ventilation system during WRSS operations.

1.6 EXTERNAL MAN-MADE THREATS

There are no unique external man-made threats for the WRSS. For a full discussion of this subject see Appendix C, Section 1.6, "External Manmade Threats," in the main text of the BIO.

1.7 NEARBY FACILITIES

Accidents attributed to nearby facilities are discussed in Appendix C, Section 1.7, "Nearby Facilities," in the main text of the BIO. There are no unique accidents from nearby facilities identified for the WRSS. The WRSS accidents with the potential to affect the maximum onsite individual are specifically limited to those discussed in Section 3.4.2, "Evaluation Basis Accident," of this addendum.

Tank 241-AY-102 is connected to other nearby tanks in the AY/AZ tank farm through a common connection to the ventilation system (either 241-A-702 or 241-AZ-702). The configuration of the ventilation system was considered in the analysis of accidents unique to the WRSS operations. Tank 241-AY-102 is also connected to other tanks through a common, existing transfer system. There were no accidents unique to WRSS identified with regard to this system.

Tank 241-C-106 is currently shares a ventilation system (296-P-16) with Tank 241-C-105 and an overflow cascade line also connects the two tanks. The new Tank 241-C-106 ventilation system (296-C-006) has no connection to other tanks. Existing configurations were considered in the analysis of accidents unique to WRSS operations.

1.8 VALIDITY OF EXISTING ENVIRONMENTAL ANALYSES

The existing environmental analyses for the WRSS is evaluated in DOE/EA-0933, *Environmental Assessment, Tank 241-C-106 Past-Practice Sluicing Waste Retrieval, Hanford Site, Richland, Washington.* No significant discrepancies have been identified between the WRSS assumptions herein and DOE/EA-0933.

1.9 REFERENCES

DOE 4700.1, 1992, *Project Management System*, U.S. Department of Energy, Washington, D.C.

DOE/EA-0933, 1995, *Environmental Assessment, Tank 241-C-106 Past-Practice Sluicing Waste Retrieval, Hanford Site, Richland, Washington*, U.S. Department of Energy, Washington, D.C.

HNF-SD-WM-BIO-001, 1998, *Tank Waste Remediation System Basis for Interim Operation*, Rev. 1, Fluor Daniel Hanford, Inc., Richland, Washington.

HPS-SDC-4.1, 1989, *Standard Architectural-Civil Design Criteria: Design Loads for Facilities*, Rev. 12, Hanford Plant Standards, U.S. Department of Energy, Richland Operations Office, Richland, Washington.

WHC-SD-WM-SARR-016, 1996, *Tank Waste Compositions and Atmospheric Dispersion Coefficients for Use in Safety Analysis Consequence Assessments*, Rev. 2, Westinghouse Hanford Company, Richland, Washington.

This page intentionally left blank.

CHAPTER 2.0
FACILITY DESCRIPTION

This page intentionally left blank.

CHAPTER 2.0
FACILITY DESCRIPTION

CONTENTS

2.0 FACILITY DESCRIPTION 2-1
2.1 INTRODUCTION 2-1
2.1.1 Safety Issues Background 2-2
2.1.2 Change to Facility Authorization Basis 2-2
2.2 REQUIREMENTS 2-3
2.3 FACILITY OVERVIEW 2-3
2.3.1 Sluice and Slurry Pump Systems 2-3
2.3.2 Sluicer System 2-3
2.3.3 Slurry Distributor (Tank 241-AY-102) 2-4
2.3.4 Interfarm Piping 2-4
2.3.5 Tank 241-C-106 Sluicing Ventilation System 2-4
2.3.6 Tank 241-AY-102 Ventilation System 2-5
2.3.7 Seismic Shutdown System 2-6
2.4 FACILITY STRUCTURES 2-6
2.4.1 Systems Descriptions 2-6
2.4.2 Support Systems 2-22
2.5 PROCESS DESCRIPTION 2-24
2.5.1 Sluicing Preparations 2-25
2.5.2 WRSS Operations 2-26
2.5.3 Supporting Operations 2-43
2.5.4 Past Practice Sluicing Lessons Learned 2-43
2.5.5 Chemical Compatibility 2-47
2.6 SAFETY SUPPORT SYSTEMS 2-48
2.6.1 Fire Protection Systems 2-48
2.6.2 Ventilation Exhaust Radiation Monitoring System . . . 2-48
2.6.3 WRSS System Interlocks 2-48
2.6.4 System Controller and Interlocks 2-49
2.7 UTILITY DISTRIBUTION SYSTEMS 2-49
2.7.1 Process and Instrument Air 2-49
2.7.2 Electrical Power 2-49
2.7.3 Water Supply 2-50
2.7.4 Compressed Air System 2-50
2.8 AUXILIARY SYSTEMS AND SUPPORT FACILITIES 2-50
2.9 REFERENCES 2-50

LIST OF FIGURES

2-1 Tank 241-C-106 Waste Retrieval Sluicing System Tank and Transfer Line Arrangement Diagram F2-1

2-2 Tank 241-C-106 Waste Retrieval Sluicing System Equipment Arrangement F2-2

2-3 Design of Single-shell Tank 241-C-106 (530,000 gal) F2-3

2-4 Tank 241-C-106 Cross-Sectional View F2-4

2-5 Tank 241-C-106 Waste Retrieval Sluicing System Ventilation Flow Diagram F2-5

2-6 Tank 241-AY-102 Cross-Sectional View F2-6

2-7 Aging Waste Facility Primary and Backup Ventilation System (241-A-702) F2-7

2-8 Annulus Ventilation System Tank 241-AY-102 . . . . . F2-9

2-9 241-AZ-702 Ventilation Upgrade System F2-10

2-10 Tank 241-C-106 Waste Retrieval Sluicing Sluicer Assembly Arrangement Diagram F2-11

LIST OF TABLES

2-1 Tank 241-C-106 Existing Instrumentation Signals T2-1

2-2 Tank 241-AY-102 Existing Instrumentation Signals T2-1

2-3 C-Farm Ventilation System Interlocks T2-2

2-4 C-Farm Submersible Pump Shutdown Interlocks T2-3

2-5 C-Farm Booster Pump Shutdown Interlocks T2-4

2-6 AY-Farm Submersible Pump Shutdown Interlocks T2-5

2-7 AY-Farm Booster Pump Shutdown Interlocks T2-6

2.0 FACILITY DESCRIPTION

2.1 INTRODUCTION

The purpose of this chapter is to provide a description of the Project W-320, Tank 241-C-106 Sluicing system facilities, equipment, instrumentation, operations and any changes to the description of the Tank Waste Remediation System (TWRS) facility provided in Appendix B, Section 2.0 of HNF-SD-WM-BIO-001, *Tank Waste Remediation System Basis for Interim Operations* (BIO). The sluicing system will be referred to as the Waste Retrieval Sluicing System (WRSS) in this document. Representative accidents unique to the WRSS and its operation as described in this chapter are analyzed in Chapter 3.0, "Hazard Evaluations and Accident Analysis." Defense-In-Depth and Safety-Class or Safety-Significant structures, systems, and components are addressed in Chapter 4.0, "Safety Structures, Systems and Components."

Tank 241-C-106, a 2.0 million-L (530,000-gal) capacity single-shell tank (SST), is a high heat tank [greater than 11.7 kW (40,000 Btu/h)] and a watchlist tank (HNF-EP-0182-120, *Waste Tank Summary Report for Month Ending March 31, 1998*) requiring the addition of up to approximately 22,600 L (6000 gal) of cooling water per month to maintain safe storage temperatures. A significant safety issue has been generated by the need to continue water additions until about the year 2045 when the radiogenic heat of decay will be less than 11.7 kW (40,000 Btu/h), the high heat tank criteria. If a tank leak occurs, it would be desirable to stop water additions to the tank to limit the leakage to the environment. However, if cooling water additions were interrupted, the sludge temperatures would exceed established limits and could cause structural damage to the tank concrete that would allow high-level waste (HLW) to be released from the tank. Should water additions continue into a leaking tank, the leakage would further contaminate the soil column.

Public Law 101-510, *National Defense Authorization Act for Fiscal Year 1991*, Section 3137, "Safety Measures for Waste Tanks at Hanford Nuclear Reservation" (known as the Wyden Amendment), mandates that the U.S. Department of Energy (DOE) develop plans to respond to safety issues associated with the underground waste storage tanks on the Hanford Site and to report progress on implementing those plans to Congress. Tank 241-C-106 has been identified (in accordance with the Wyden Amendment) as having serious potential for release of HLW because of an uncontrolled high-temperature increase if active cooling is not maintained in the tank. According to WHC-SP-0697, *A Plan to Implement Remediation of Waste Tank Safety Issues at the Hanford Site*, Tank 241-C-106 is one of four Priority 1 waste tank safety issues.

Ecology, EPA, and DOE, *Hanford Federal Facility Agreement and Consent Order*, known as the Tri-Party Agreement, Milestone M-45-03A, "Initiate Sluicing Retrieval of 241-C-106," requires RL to "initiate sluicing retrieval of Tank 241-C-106 to resolve the high heat issue and demonstrate waste retrieval." Based on the needs and criteria detailed in WHC-EP-0586, *Tank Selection Criteria and Retrieval Recommendation for Tri-Party Agreement Milestone M-07*, Tank 241-C-106 has been identified as the retrieval demonstration tank by DOE, and the Washington State Department of Ecology, (Ecology) has concurred in this selection.

2.1.1 Safety Issues Background

DOE is taking action to eliminate the safety concern regarding storage of the radiogenic high heat waste in Tank 241-C-106 and to demonstrate a SST waste retrieval technology.

The proposed action is the retrieval and transfer of waste from Tank 241-C-106 to double-shell tank (DST) 241-AY-102. Tank 241-C-106, constructed during 1943 and 1944 is well past its design life, since the original design life of the Hanford single shell tanks was on the order of 20 years. Of the 48 tanks of this type built in this time frame (B, C, T, and U tank farms) 21 are known to be leaking. The life-limiting conditions for Tank 241-AY-102 were identified through WHC-SD-WM-ER-585, *DST Remaining Useful Life Estimates*, the development of life prediction models. The results of this model suggest that this DST should not fail by through-wall pitting until well beyond 2028. The primary tank wall is not expected to be breached until the year 2033. The waste retrieval technology to be demonstrated will employ enhanced past-practice sluicing methods which were successfully employed in retrieving roughly 7.57 million L (2.0 millon gal) of waste solids from 53 SSTs during uranium, cesium, and strontium recovery campaigns in the 1950's, 1960's, and 1970's. Past-practice methods have been enhanced by the addition of a more modern control system, improved pump designs, flow and pressure monitoring instrumentation, routine in tank imaging (CCTV), and transfer line flushing capability.

Project W-320, Tank 241-C-106 Waste Retrieval Sluicing System (WRSS), which represents the proposed action, provides for the design, procurement, installation, and testing of equipment as well as the preparation of documentation required to implement the proposed action. The equipment includes sluice and slurry pumping systems; dedicated (closed-loop) transfer lines; heating, ventilation, and air-conditioning systems; support systems; and modifications to existing tanks and their associated support systems. Documentation includes an Environmental Assessment (DOE\EA-0933, *Environmental Assessment, Tank 241-C-106 Past Practice Sluicing Waste Retrieval, Hanford Site, Richland, Washington*), functional design criteria (HNF-SD-W320-FDC-001, *Functional Design Criteria for Tank 241-C-106 Waste Retrieval, Project W-320*), a safety equipment list (WHC-SD-WM-SEL-033, *Tank 241-C-106 Sluicing Preliminary Safety Equipment List*), a preliminary safety evaluation (WHC-SD-WM-PSE-010, *Preliminary Safety Evaluation for the 241-C-106 Waste Retrieval, Project W-320*), and the BIO.

The scope of this proposed action includes operations activities in support of WRSS such as pre-sluicing waste transfers and startup support, sluicing operation, and storage and monitoring of the waste in Tanks 241-C-106 and 241-AY-102. The proposed action includes activities through completion of the transfer of the wastes from Tank 241-C-106 to Tank 241-AY-102 and subsequent monitoring of Tanks 241-AY-102 and 241-C-106.

2.1.2 Change to Facility Authorization Basis

The WRSS is considered a change to an existing facility Authorization Basis requiring an Unreviewed Safety Question (USQ) evaluation per the

requirements of DOE 5480.21, *Unreviewed Safety Questions*. A USQ evaluation, TF-95-0105, *Project W-320, C-106 Sluicing and Waste Retrieval for Storage in AY-102*, has been performed. The USQ evaluation determined that DOE approval of this proposed action is required.

A safety analysis is required before operations can proceed, in accordance with DOE 5480.21, to determine conclusively what controls and engineered features are required and serves as the technical basis for a change to the Authorization Basis which specifically authorizes WRSS activities. DOE 5480.23, *Nuclear Safety Analysis Reports*, requires safety analysis reports for DOE nuclear facilities. The WRSS is an operation of limited complexity, limited scope (involving only two tanks), and of limited duration (six months to two years). To satisfy the requirements to document the safety analysis of the WRSS in accordance with DOE 5480.23, the safety analysis is prepared according to DOE-STD-3009-94, *Preparation Guide for U.S. Department of Energy Nonreactor Nuclear Facility Safety Analysis Reports*.

2.2 REQUIREMENTS

See Appendix B, Section 2.2, "Requirements," of the BIO main text for descriptions of design codes, standards, regulations, and DOE orders relevant to TWRS. Design requirements for WRSS are presented in HNF-SD-W320-FDC-001.

2.3 FACILITY OVERVIEW

The major pieces of equipment necessary for the WRSS are summarized below. The major equipment items include: two nearly identical pump systems, one for delivery of the sluice stream or supernate to Tank 241-C-106 and a second for delivery of slurry to Tank 241-AY-102; a sluicer system; a slurry distributor; and interfarm piping to complete a dedicated, closed-loop sluicing system (Figures 2-1 and 2-2). Other major equipment items are the Tank 241-C-106 ventilation system and modifications to the Tank 241-AY-102 annulus ventilation system.

2.3.1 Sluice and Slurry Pump Systems

The sluice and slurry pump systems are each made up of two pumps in series (a submersible pump and a booster pump). The booster pump raises the transfer fluid pressure to the level necessary to move the slurry between the two tanks.

2.3.2 Sluicer System

One sluicer is provided to mobilize the Tank 241-C-106 sludge in preparation for transferring the slurry to Tank 241-AY-102. The sluicer will operate in the Tank 241-C-06C sluice pit. The sluicer is vertically articulated with its articulation point located at a fixed elevation (4.7 m [15.5 ft] above the bottom center of the tank) as high as practical in the tank.

2.3.3 Slurry Distributor (Tank 241-AY-102)

The slurry from Tank 241-C-106 is discharged into Tank 241-AY-102 through a slurry distributor. The slurry distributor is a straight 4-in. pipe with four 2-in. diameter horizontal nozzles spaced at 90° intervals that are located at a fixed 3.8 m (12.5 ft) elevation in the tank. The slurry lines, and slurry distributor will be routinely flushed during WRSS operations to ensure that solids build-up in the system does not occur. Uniformity of the distributed layer of sludge in Tank 241-AY-102 will be determined at each sluicing increment through temperature data in combination with the ENRAF densitometer measurement.

A high capacity drain is incorporated into the slurry distributor head assembly installed at Pit 241-AY-02A, Riser 6. The high capacity drain is sized to drain all liquid from within the pit in the event a transfer line break were to occur during maximum flow. Liquid accumulating within the pit which overcomes the existing pit floor drain is channeled through the high capacity drain, down the respective riser, and into the tank. A drain plug is provided to seal the high capacity drain when pit cover blocks are removed.

2.3.4 Interfarm Piping

The waste is transferred through two encased pipelines, one for delivery of sluicing media (Tank 241-AY-102 supernate) to Tank 241-C-106 and the other for transporting slurry to Tank 241-AY-102. These pipelines are approximately 0.5 km (0.3 mi) each in length. The primary lines are designed to withstand a maximum pressure of 2.2 MPa (320 psig). This provides a conservative margin to the maximum expected WRSS operations pressure range of 0.7 - 1.4 MPa (105 - 200 psig) at the nominal 1325 L/min (350 gal/min) flow rate. They are provided with leak detection, either buried or covered with an earthen berm to limit personnel dose to tank farm workers in accordance with As Low As Reasonably Achievable (ALARA) practices, and have a seismic trip switch to shut off the pumps in case of an earthquake.

2.3.5 Tank 241-C-106 Sluicing Ventilation System

The Tank 241-C-106 ventilation system (296-C-006) serves to: (1) cool the tank, (2) maintain the tank at a negative pressure relative to atmosphere, which discharges a decontaminated ventilation stream to the atmosphere and (3) dilute the flammable gasses generated in the tank. The system is a combination recirculation and exhaust system. The recirculation portion of the system is used to provide the needed cooling. The exhaust portion of the system maintains the required negative pressure in the tank and flammable gas dilution. The 296-C-006 ventilation system is the only ventilation system that will be in operation on Tank 241-C-106 during active sluicing operations. Figure 2-5 provides a diagram of the 296-C-006 system. The 296-C-006 process building inlet duct includes a flushing feature to allow the duct to be washed down internally to reduce operator exposure. This feature would be used in the event that internal contamination levels produce radiation levels in the area around the ducting which do not meet ALARA guidelines.

An older ventilation system (296-P-16), the Tank 241-C-105/106 ventilation system also serves Tank 241-C-106. It will be maintained in an operational standby status as a backup system for cooling Tank 241-C-106, but will only be used to cool the tank before sluicing and during monitoring or maintenance periods. However, the main function of the older ventilation system will be to cool the Tank 241-C-106 waste before initiation of sluicing to reduce the potential for a steam release event during the retrieval activity and to provide a high-flow exhaust system to support Tank 241-C-106 open-riser maintenance activities.

2.3.6 Tank 241-AY-102 Ventilation System

The Tank 241-AY-102 primary ventilation system, 241-A-702, (1) cools the tank, (2) maintains the tank at a negative pressure while discharging a decontaminated ventilation stream to the atmosphere and (3) dilutes the flammable gases generated in the tank. Figure 2-7 provides a diagram of the 241-A-702 system. A new ventilation system, 241-AZ-702, was installed by Project W-030 and is available for use by the WRSS.

The 241-AZ-702 ventilation system uses separate systems for cooling and/or confinement and for exhausting. However, 241-AZ-702 and the existing ventilation system, 241-A-702, both rely on evaporative cooling to maintain waste temperatures. The exhaust system contains HEPA filtration and stacks similar to the existing design. A separate recirculating system is added for cooling and confinement. This additional system greatly reduces the amount of air vented out the stack. The 241-AZ-702 system will have three operating modes available: recirculation, high heat, and by-pass. It is planned that the WRSS will utilize the 241-AZ-702 system which is currently being installed. This safety assessment bounds the filtration, flow, and cooling capacity of the 241-AZ-702 system and the 241-A-702 system (which may be used as a contingency). Figure 2-9 provides a diagram of the 241-AZ-702 system.

The annulus space in Tank 241-AY-102 is provided with a dedicated, independent ventilation system. Figure 2-8 provides a diagram of the annulus ventilation system. The cooling capacity of the annulus ventilation system has been upgraded to increase the underfloor flow rate and increase the vacuum capacity. Both conservative and best estimate calculations have been developed for the required annulus cooling parameters as a function of the incremental waste volume that is transferred from Tank 241-C-106 to Tank 241-AY-102 (HNF-SD-W320-ER-004, *Project W-320 SAR and Process Control Thermal Analysis*). The best estimate calculations show that all of the sludge in Tank 241-C-106 can be accommodated in Tank 241-AY-102 without further modification to the ventilation system. Conversely, when conservative values for waste fluffing factor, heat load, and heat distribution are selected, these calculations indicate that additional cooling capacity may be required (i.e., additional blowers and/or a chiller may need to be installed). However, even the conservative calculations show that a transfer of 2 feet (0.61 m) of sludge to Tank 241-AY-102 can be cooled with the current ventilation system. Thus, the initial sluicing campaign will be limited to 2 feet (0.61 m) (or less) of sludge. Following the transfer of the initial (and each subsequent) increment, an evaluation of the system will be performed to determine its ability to maintain the waste at 30 °F below local saturation

temperature as required by Technical Safety Requirements (TSR) controls (Administrative Control [AC] 5.12.2 and AC 5.25.2). If this evaluation (i.e., thermal monitoring and modeling) indicates that 30 °F subcooling cannot be maintained for further waste additions, then the Tank 241-AY-102 ventilation system will be modified, with the addition of blowers or a combination of blowers and chillers, before transferring additional waste. It is important to note that this safety assessment analyzes the entire 6-ft waste transfer to provide bounding accident consequences.

2.3.7 Seismic Shutdown System

Seismic shutdown systems are provided as part of the Tank 241-C-106 and the 241-AY-102 WRSS electrical systems. Each seismic shutdown system consists of two seismic triggers connected in series. Each of the triggers are housed in separate environmental enclosures which protect the triggers and provide a controlled internal temperature of approximately 50 °F to 85 °F.

Both the Tank 241-C-106 and the Tank 241-AY-102 seismic systems are essentially identical. The seismic systems serve to shutdown waste transfer operations by interrupting electrical power to the submersible pumps, the booster pumps, and other WRSS components in the event a seismic event occurs which results in a ground acceleration above the trigger set point value. The individual seismic triggers open the control circuits of a contact when a seismic event occurs. The contacts remain open during and after the seismic event.

2.4 FACILITY STRUCTURES

2.4.1 Systems Descriptions

The major equipment provided by WRSS is described in detail in this section. The transfer system that consists of the sluice pumps, slurry pumps, winch assemblies and encased transfer lines which include anti-syphon and cathodic protection systems are described. Other major pieces of equipment provided specifically for Tank 241-C-106 include the sluicer system, the sluicing ventilation system, the air inlet chiller and an in-tank imaging system. The major pieces of equipment provided for Tank 241-AY-102 are the slurry distributor and the sluicer pumps. A portable in-pit imaging system is used, as necessary, at pits over both tanks.

2.4.1.1 Tank 241-C-106.

2.4.1.1.1 Tank Configuration. Tank 241-C-106 is beyond its design life as it was constructed during 1943 and 1944. It has a rated capacity of approximately 2.0 million L (530,000 gal), at a vacuum less than 1.3 m (50 in) of water. The tank is 23 m (75 ft) in diameter, and is fabricated of reinforced concrete with a carbon steel liner on the bottom and sides. The tank has a 31 cm (12 in) deep, dished bottom and a useable waste depth of about 4.9 m (16 ft) at the sidewall. The bottom of the tank is 15 cm (6 in) thick reinforced concrete covered with a 5 cm (2 in) layer of asphalt

composition material, placed between the steel liner and the reinforced concrete during construction to seal the outer surface of the steel liner and to provide a moisture barrier, and a 1 cm (3/8 in) steel plate liner. The knuckle (the transition section from bottom to sidewall) is a 1 cm (3/8 in) thick steel plate. The tank walls are 33 cm (13 in) thick reinforced concrete; the steel liner extends 5.5 m (18 ft) up the straight side of the tank, varying in thickness from 0.6 to 1 cm (1/4 to 3/8 in). The top of the steel liner is covered with lead flashing to prevent moisture from entering any spaces between the liner and concrete wall. The dome of the tank is constructed of 38 cm (15 in) thick reinforced concrete. No liner is provided for the concrete dome. The tank is shown in plan and elevation in Figure 2-3 and in pictorial cross-section in Figure 2-4.

Tank 241-C-106 contains 746,000 L (197,000 gal) (about 1.75 m [69 in.]) of sludge with a total heat load estimated at 38.8 kW (132,400 Btu/h) as of June 1994 (HNF-SD-W320-ER-004). The total heat load and, in part, the heat load distribution determine the peak temperature in the sludge. If this peak sludge temperature exceeds the local saturation temperature, a bump can occur. Tank 241-C-106 is on the High Heat Watch List and must receive periodic water additions to maintain the waste temperatures within allowable limits. The waste temperatures are maintained with evaporative cooling by means of active ventilation.

2.4.1.1.2 Ventilation. The Tank 241-C-106 ventilation system (296-P-16) serves to: (1) cool the tank, (2) maintain the tank at a negative pressure relative to atmosphere while discharging a thoroughly decontaminated ventilation stream to the atmosphere and (3) dilute the flammable gases generated in the tank. The system provides a nominal flow rate of 67.9 m^3/min (2400 ft^3/min) and has multiple capabilities, combining the functions of pressure, temperature, and humidity control. It includes equipment to limit the release of hazardous aerosols and a ventilation exhaust radiation monitoring system to confirm the effectiveness of the ventilation system to maintain emissions of radionuclides ALARA in compliance with Washington Administrative Code, WAC 173-480, "Air Pollution Control Regulations."

The project has installed a ventilation system chiller in combination with an inlet filter cooling coil on the 296-P-16 ventilation system, designed to cool the tank contents. This provides a constant 4.4 °C (40 °F) inlet air flow, which is adequate on a long-term basis to preclude the existence of a steam bubble in the waste (NAI-940708-3, *GOTH Tank C-106 Thermal Hydraulics Analysis Related to the 1995 Process Test*). However, even with the chiller and inlet filter cooling system, reduced water additions will continue until an adequate volume of high heat waste is removed from the tank.

In addition to the chiller and filter cooling coil, a new ventilation system (296-C-006) for Tank 241-C-106 is installed as part of WRSS and provides a nominal exhaust flow rate of 6.5 m^3/min (230 ft^3/min) with a recirculation flow rate of up to 24 m^3/min (860 ft^3/min) (Figure 2-5). The recirculation portion of the system is used to provide the needed cooling. The exhaust portion of the system maintains the required negative pressure in the tank and flammable gas dilution. There is a cascade line between

Tanks 241-C-105 and 241-C-106 which is assumed to be open in the HVAC system design. Major pieces of ventilation equipment are mounted on transportable skids (WHC-SD-W320-TI-002, *Project W-320 Tank 241-C-106 Sluicing Process*).

The ventilation system has been designed to:

- Maintain a negative tank pressure
- Remove heat from the tank and dehumidify recirculating air
- Remove aerosols from ventilation emissions
- Monitor the exhaust ventilation emissions stream through the exhaust stack to the atmosphere
- Use the existing ventilation system for active ventilation for extended maintenance or additional tank cooling (before or during the sluicing retrieval activity)
- Reduce formation of fog in the tank vapor space by recirculating de-humidified air into the tank to improve visibility for the remote viewing cameras in accordance with WHC-SD-W320-TI-002 (fog formation is not eliminated under all anticipated conditions)
- Dilute the flammable gases generated in the tank.

To minimize releases to the atmosphere from the ventilation system on Tank 241-C-106, a high-efficiency particulate air (HEPA) filtration system is installed on Tank 241-C-106. A high-efficiency mist eliminator (HEME) and a high-efficiency metal filter (HEMF) are also included in this system.

Instrumentation to monitor the condenser (HX-1361) air stream differential pressure, air stream inlet temperature, air stream outlet temperature, heating coil (HC-1361) outlet temperature, recirculation fan (FN-1361) differential pressure, and motor current is provided. Instruments to monitor HEME (HME-1361) and HEMF (HMF-1361) differential pressures and HEME outlet temperature are also provided. Position switches indicate the HEMF flush water and/or blowdown air inlet valve and drain valve positions to the control station operator.

New exhaust ducts have been designed and installed to discharge through the new filtration system. The old ventilation system and ducts will remain in place and operational for Tank 241-C-105 and Tank 241-C-106 major maintenance operations. During these infrequent major maintenance operations, an air flow of approximately 85 m^3/min (3000 ft^3/min) would be discharged through this ventilation system.

A HEME and HEMF unit is installed upstream from the HEPA filtration units, which would catch the majority of the contaminants before they reach the HEPA filters. The HEME and HEMF are included to meet ALARA requirements, which are designed to minimize worker exposure to the greatest extent possible. Because the HEME and HEMF are flushable, little or no solid waste

is expected to be generated by the entire air filtration system. At the conclusion of the waste retrieval activities, the disposable part of these filter units would be disposed of at the Hanford Site.

To control the temperature and humidity of the Tank 241-C-106 vapor space during sluicing, a recirculation line in the ventilation system was installed. This recirculation line consists of a condenser, a mist eliminator, a heater and a recirculation fan. The condenser provides a means of removing excess heat from the tank to allow sluicing to proceed safely and efficiently. If it is determined by thermal modeling (HNF-SD-W320-ER-004) that a higher cooling rate is needed, this cooling may be accomplished by activating the original high-capacity ventilation system to allow the inlet air chiller to be used. This cooling approach can only be used during periods when sluicing is not operating.

The 296-P-16 HVAC system will be used to ventilate Tank 241-C-106 during large riser (12 and 36 inch diameter risers) opening maintenance activities to maintain inflow rates at capture velocities. It may also be used during maintenance outages of the 296-C-006 HVAC system depending on their duration. The added air flow provided by the existing ventilation system may also be required periodically during the life of the project to maintain waste temperatures (i.e., ensure a continued adequate margin below any steam void formations). Air is drawn through the headspace using the existing Tank 241-C-105/106 exhauster (296-P-16).

2.4.1.1.3 Existing Instrumentation. Table 2-1 lists the existing instrumentation, prior to WRSS, for Tank 241-C-106. The signals are used to provide alarms as well as to provide data input for logging and trend analysis.

2.4.1.2 Tank 241-AY-102.

2.4.1.2.1 Tank Configuration. Tank 241-AY-102 was constructed in the late 1960's and has a rated capacity of 3.7 million L (980,000 gal). It is an underground, carbon steel, radioactive waste tank encased in a concrete shell. Tank 241-AY-102 consists of a primary steel tank with an inner diameter of 22.9 m (75 ft) and a secondary concrete, steel-lined tank with an inner diameter of 24.4 m (80 ft). The free-standing height of the primary tank is 14.3 m (46.9 ft) to the top of the dome. The thickness of the carbon steel tank bottom varies from 1 to 2.54 cm (3/8 to 1 in). The wall thickness varies from 1 to 1.9 cm (3/8 to 3/4 in), with the thicker plates at the bottom. The maximum liquid level is about 11 m (35 ft) from the bottom. There are 22 airlift circulators located in Tank 241-AY-102: one at the tank's center axis, 8 equally spaced at a radius of about 4.4 m (14.5 ft), and the remainder equally spaced at a radius of about 8.2 m (27 ft).

The tank-in-tank concept ensures that any leakage from the primary tank will be contained in the annulus between the tank walls, allowing transfer of the contents to another tank. The second barrier meets the requirement of DOE 6430.1A, *General Design Criteria*, Sections 1300-3.3 and 1323, that a single failure not result in a loss of safety function.

The tank is connected to other tanks through a network of underground transfer piping, diversion boxes, diverter stations, and valve pits. Tank 241-AY-102 is shown in an elevation view in Figure 2-2 and in a pictorial cross section in Figure 2-6.

Tank 241-AY-102, a double-shell tank, contains 121,000 L (32,000 gal) (about 305 mm [12 in.]) of sludge and 3.1 million L (812,000 gal) of supernate for a total waste depth of about 9 m (30 ft). The estimated heat load of Tank 241-AY-102 is 13.2 kW (45,000 Btu/h) (HNF-SD-W320-ER-004).

2.4.1.2.2 Ventilation. The 241-A-702 primary, and available backup ventilation systems, (1) cools the tank, (2) maintains the tank at a negative pressure and (3) dilutes the flammable gases generated in the tank (Figure 2-7, sheets 1 and 2). The annulus ventilation system ventilates and provides filtered air to the tank annulus (Figure 2-8). The 241-A-702 primary ventilation system exhausts the Aging Waste Facility (AWF) tanks (241-AY-101, 241-AY-102, 241-AZ-101, and 241-AZ-102), two catch tanks (241-AZ-151 and 241-AZ-154), and the 241-AX-152 diverter station. Two 113 m^3/min (4000 ft^3/min) exhausters operate, one at a time, to draw the gases through an extensive particulate and condensate removal system before discharging to the atmosphere via the 296-A-17 stack. This design has a heat removal capacity of 4 million Btu/h per tank (16 million Btu/h for the AWF) assuming the heat generating materials are maintained in suspension, thus enabling convective cooling.

The 241-A-702 backup ventilation system is a skid-mounted 113 m^3/min (4000 ft^3/min) exhauster. It provides containment of radioactivity should the primary exhaust fans fail during testing and maintenance of the 241-A-702 primary system, and during chemical flushing or upper pad water flushing of the K1-5-2A deentrainer. The backup exhaust fan starts automatically upon failure of both primary exhaust fans. This system uses the deentrainers and condensers of the 241-A-702 primary system but has its own preheater, HEPA filters, and ventilation fan.

The Project W-030 ventilation system (241-AZ-702) replaces the 241-A-702 and uses separate systems for cooling and/or confinement and for exhausting (Figure 2-9). However, 241-AZ-702 and the existing ventilation system, 241-A-702, both rely on evaporative cooling to maintain waste temperatures. The exhaust system contains HEPA filtration and stacks similar to the existing design. A separate recirculating system is added for cooling and confinement. This additional system greatly reduces the amount of air vented out the stack. Because of this reduced flow rate, Tank 241-AY-102 inleakage pathways will be sealed to the maximum extent practical to maintain negative pressure in the tank.

Project W-030 has three operating modes available: recirculation, high heat, and by-pass. Operation of the 241-AZ-702 system in the recirculation mode will have flow rates of 14.2 m^3/min (500 ft^3/min) with 11.3 m^3/min (400 ft^3/min) recirculated and only 2.8 m^3/min (100 ft^3/min) exhausted through the stack. In the high heat mode, the system can provide 14.2 m^3/min (500 ft^3/min), single-pass ventilating to one of the AWF tanks. The normal mode provides 2.8 m^3/min (100 ft^3/min), single-pass ventilation per AWF tank. The new design will have one recirculating system per tank while sharing a

common exhaust stack. The new design also will contain some additional components such as a high-efficiency gas absorber and a high-efficiency mist eliminator.

The annulus ventilation system provides filtered air to the annulus area on Tank 241-AY-102 to monitor for primary tank leaks; minimize moisture accumulation; remove a major portion of the heat generated in the primary tank; and ventilate the leak detection pits. The annulus ventilation system supplies air through two routes: (1) a direct supply to the annulus via eight tank drop legs, of which four 14.7 cm (6 in) lines deliver air at approximately midpoint and four 10.2 cm (4 in) lines deliver air to the underfloor distribution plenum at the center of the tank; and (2) an underfloor air distribution grid work system. The underfloor flow is approximately 4.3 m^3/min (150 ft^3/min). To direct cooling flow to the floor of the tank, the annulus system upgrade will be performed to block the flow to the four 14.7 cm (6 in) annulus supply lines and to operate at a higher vacuum and exhaust flow rate. As described in Section 2.3.6, "Tank 241-AY-102 Ventilation System," an inlet system blower, or an inlet system blower and chiller can be installed to maintain the waste at 30 °F below local saturation temperature. These upgrades will enhance the cooling capacity of the annulus ventilation system to meet the cooling capacity needs of the tank based on thermal analysis of observed waste conditions (volume, fluffing factor, and tank temperature response). This evaluation is performed following each sluicing increment according to the control (AC 5.25) specified in Section 3.4.2.11, "Tank Bump."

2.4.1.3 Pump Systems. The pump systems (located in the 241-AY-02E pit and the 241-C-06A pit, respectively) each include two pumps in series. The first is a centrifugal, 40-hp submersible pump mounted on a winch system that allows its height to be adjusted. The submersible pump feeds a 250-hp, variable speed centrifugal booster pump located in the pump pit above the submersible pump. The booster pump raises the transfer fluid pressure to the level necessary to transit the distance between the two tanks at the nominal 1325 L/min (350 gal/min) flow rate and 2.7 m/s (8.7 ft/s). The booster pump variable speed drive allows fine-flow adjustments to control the tank liquid level. The submersible in-tank pumps are equipped with winches that adjust height of the pump to control the liquid level, enhance sluicing efficiency, and allow adjustment of the pump height to meet net positive suction head requirements as the liquid level changes.

The slurried waste in Tank 241-C-106 is transferred using a submersible slurry pump (P-1361) in series with a centrifugal slurry booster pump installed in pump pit 241-C-06A. The submersible slurry pump is a direct-drive, end-suction, 40-hp submersible pump installed in the 91 cm (36 in), R-9 riser in pump pit 241-C-06A. The slurried waste pressure is then increased by the centrifugal slurry booster pump, which is a 250-hp, vertical direct drive, variable-speed pump that will deliver the slurried waste to Tank 241-AY-102. Together the submersible slurry pump and slurry booster pump are rated to deliver 1325 L/min (350 gal/min) or 2.7 m/s (8.7 ft/s) at 195 m (640 ft), operating at a temperature of 49 °C (120 °F), and have a structural design temperature of 82 °C (180 °F). The temperature of the slurry in the transfer system at the beginning of sluicing operations is anticipated to be between 80 and 90 °F. The slurry temperature will increase slowly during the

active sluicing operations as the result of the energy inputs of the pumps. The resulting heating of the pumped fluids was evaluated (TR-W-320-126, *Project W-320, Tank 241-C-106 Sluicing - An Analysis of Energy and Temperature Effects for Tank AY-102*) and after 30 days of nearly continuous pumping operations the temperature was estimated to increased to approximately 120 °F.

Because sluicing operations will be intermittent (short period of sluicing followed by longer periods of observation), it is not anticipated that the 120 °F limit will be reached during sluicing operations.

The planned manner of control of the liquid level in Tank 241-C-106 is adjustment of the Tank 241-AY-102 booster pump speed. The speed of the slurry booster pump will be adjusted to give a 1325 L/min (350 gal/min) flow rate with zero solids loading, after which the speed will remain constant for the most part. This will result in a nominal flow rate of 1174 L/min (310 gal/min) at 10% solids loading based on pump run-in curves adjusted for the specific gravity and viscosity of the 10% slurry. This information is included in the WRSS Process Control Plan (PCP). The PCP will include pump performance information for a range of pump speed settings and solids loading. The 350 gpm pump flow rate is a nominal value, not a limiting operational value. Operations accidents have been analyzed for flow rates up to 450 gpm and pumping operations may be conducted down to flow rates as low as 250 gpm. Therefore, the pump flow rate for a 10% slurry loading with the booster pump speed set to provide 350 gpm with zero percent solids is not significant from a safety standpoint.

The main purpose for having a variable-speed slurry booster pump is to help maintain an optimum liquid heel in the tank. This will allow positive control while monitoring parameters such as level, temperature, and slurry concentration.

Operating experience gained from operation of the WRSS will be applied to future sluicing campaigns in other tanks, since one of the objectives of this activity is sluicing technology demonstration.

Local controls and indications for the Tank 241-C-106 submersible slurry pump (P-1361) and the variable-speed-drive slurry booster pump (P-1362) are provided at the motor control center and the variable-speed-drive cabinet located in the C Tank Farm's electrical equipment skid. In addition, remote controls and indications for the two pumps including suction and discharge pressure and volumetric flow rate, winch position control, and pump start/stop control, are provided locally. The slurry booster pump's motor speed and voltage, as well as motor current, bearing, and stator temperatures for both pumps are furnished at the electrical equipment skid. Alarms, via the panel-mounted annunciators, alert the operator to abnormal conditions. The control of the pump will be addressed in the process control plan and WRSS operating procedures.

The submersible slurry pump suction inlet has been designed to minimize vortexing and is protected by a heavy gauge, 0.6 cm (1/4 in) mesh screen that will prevent the entrainment of large sludge conglomerations. This mesh screen can also be backflushed during shutdown periods by flushing from Tank 241-AY-102.

The base plate of each winch assembly includes a 6-inch diameter high capacity drain. The high capacity drains are sized to drain all liquid from within the pit in the event a guillotine line break were to occur during maximum flow. Liquid accumulating within the pit which overcomes the existing pit floor drain is channeled through the 6-inch drain hole, down the respective riser, and into the tank. A drain plug is provided to seal the high capacity drain when pit cover blocks are removed.

2.4.1.4 Sluicer System. One sluicer is provided to mobilize the Tank 241-C-106 sludge in preparation for transferring the slurry to Tank 241-AY-102. The sluicer operates in the Tank 241-C-06C sluice pit. The sluicer is a remotely articulated design with a fixed-elevation articulation point located as high as practical in the tank to maximize impact point control of the sluice stream. The sluicer design prevents the sluice stream from being aimed above the tank liner. A control system has been provided to control the aiming of the sluicing stream from the sluicer (S-1361). During the early stages of sluicing the sluice stream will not be aimed directly at the tank walls. The perimeter of the tank will be sluiced last to minimize the amount of material that could potentially leak through the tank wall as a result of sluicer impingement on areas weakened by corrosion. The sluicer is equipped with a 2.5 cm (1 in) nozzle that is designed for a pressure drop of 1.24 kPa (180 psig). A sluicer arrangement diagram is provided in Figure 2-10. Aiming of the sluicer nozzle is accomplished by using a self-contained hydraulic system in which hydraulic cylinders provide the azimuth and rotational control. The sluicer positioning control system has two control modes: Manual and Semi-Automatic. The selection of the mode to be used depends on the operational needs, the situation in the tank, and operational experience gained during the startup phase of the project.

Clarified supernate (Sanders 1995, *Project 93L-EWW-320, Tank 241-C-106 Sluicing-Sluicing Fluid Baseline Change to Corrosion Inhibited Water*) is delivered to the sluicer nozzle in Tank 241-C-106 via a submersible sluice pump (P-0621) in series with a sluice booster pump (P-0622) installed in sluice pit 241-AY-02E. The submersible and booster sluice pumps are identical to the counterpart slurry pumps. Only minor jumper and winch assembly differences required by the pit arrangements differentiate the two pumping systems. The submersible pump is installed in the 86 cm (34 in) R-10C riser with the booster installed in the sluice pit 241-AY-02E above. The sluice pump system has the same capacity, pressure, and temperature characteristics as the slurry pump system.

The speed control of the sluice booster pump (adjusted through a variable frequency drive) is used to control the flow rate of the pumped waste. Local controls and indicators for the submersible sluice pump (P-0621) and the variable speed drive sluice booster pump (P-0622) are provided at the 241-AY Tank Farm operator station located in the 241-AY-51 Tank Farm electrical equipment skid. Pump discharge pressure and volumetric flow, booster pump motor speed and voltage, motor current, bearing, and stator temperatures for both pumps are also provided for operator information.

The slurry concentration is controlled by a combination of sluicer aiming and slurry pump suction height adjustment. The submersible sluice pump's suction height is regulated by a remotely adjustable winch from the control

station to minimize the solids loading in the sluice stream and maintain the required net positive suction head. With the exception of the painted carbon steel motor casings and the two pump liquid level detector housings, all wetted surfaces of the pumps are constructed of 300 Series stainless steel. The suction inlet of the submersible sluice pump has been designed to minimize vortexing and is protected by a heavy gauge, 0.6 cm (1/4 in) mesh screen that prevents the entrainment of large sludge conglomerations, and is capable of being backflushed, if necessary, through the sluice line flushing connection at Tank 241-AY-102. There are no provisions for reducing particle size below the inlet screen size and that attained by vigorous agitation from the sluice stream. The schedule 40 stainless steel pipeline has sufficient wall thickness to support the anticipated erosion for the less than 1000 hours of planned slurry transfer.

A high capacity drain is incorporated into the sluicer assembly installed at Pit 241-C-06C, Riser 3. The high capacity drain is sized to drain all liquid from within the pit in the event a guillotine line break were to occur during maximum flow. Liquid accumulating within the pit which overcomes the existing pit floor drain is channeled through the high capacity drain, down the respective riser, and into the tank. A drain plug is provided to seal the high capacity drain when pit cover blocks are removed.

2.4.1.5 Existing Instrumentation. Table 2-2 lists the Tank 241-AY-102 existing instrumentation (prior to WRSS) for tank liquid-level monitoring (using ENRAF and manual tapes), temperature monitoring, pressure and vacuum monitoring, and leak detection systems. The signals are used to provide alarms as well as to provide data input for logging and trend analysis.

2.4.1.6 Leak Detection. Any leaks from primary Tank 241-AY-102 would be contained in the annulus between the primary and secondary tanks. The annulus is designed to collect and transport released waste to a common point within the annulus for detection and transfer. Leak detection is also provided in the pits located on the tank dome.

The supernate and slurry transfer piping encasements are provided with a leak detection system at pump pit 241-C-06A. The fluid that is collected in the encasement piping drains by gravity to the respective pit connected to the piping and returns to Tank 241-C-106. A manual valve, with an extended valve handle operator, is located at the low point in the encasement drain line to permit the operator to isolate the piping leakage from the pit and/or to pressure test the encasement piping.

An existing dry well monitoring system coupled with the ENRAF provides limited leak detection surveillance for Tank 241-C-106. The wells are open-bottomed, either 15 or 20 cm (6 or 8 in) diameter mild steel casings, with depths ranging from 25 to 33 m (75 to 100 ft). On a monthly to quarterly schedule radiation probes determine the radiation profile in the well.

2.4.1.7 Primary Transfer Pipes. There are two primary transfer lines, with the following major features:

Clarified supernate line

- From a functional standpoint, solids content must be less than 10 wt% per the project functional design criteria (HNF-SD-W320-FDC-001). Solids loading in the slurry line is periodically verified by performing material balance calculations during the hold periods between sluicing activities. Grab samples will be taken periodically to validate the material balance. Because of the volume of supernate in Tank 241-AY-102, 10% solids loading is not considered possible unless nearly all solids from Tank 241-C-106 remain in suspension.

  The 10% solids loading in the supernatant line is not a rapidly changing parameter due to the large volume (greater than 500,000 gallons) of supernatant liquid in Tank 241-AY-102. The combination of relatively high solids settling estimates (based on core sample particle size distributions) and intermittent sluicing operations make achieving the 10% figure virtually impossible. The solids loading in Tank 241-AY-102 is monitored by a combination of the Tank 241-AY-102 ENRAF densitometer and grab samples.

- Maximum viscosity of the supernate at a 10 wt% solids loading is 20 centipoise (cP). Viscosity is not directly measured. It is controlled indirectly by the same methods used to control solids loading.

- The line is made of 10 cm (4 in), welded, schedule 40, 304L stainless steel. Design and performance attributes of the piping system are addressed in HNF-SD-W320-TI-008, *Tank 241-C-106 Sluicing Project W-320 Integrity Assessment Report*.

- The pipeline length is 0.5 km (0.3 mi).

- The line delivers supernate from Tank 241-AY-102 to the sluicer in Tank 241-C-106.

- Flow velocity in the pipes is nominally 2.7 m/s (8.7 ft/s) and the flow is nominally 1325 L/min (350 gal/min).

Slurried waste line

- Solids content is to be limited to 30 wt% per the project functional design criteria (HNF-SD-W320-FDC-001). Solids loading is measured during sluicing by mass flow meter, and periodically verified during the hold periods between sluicing activities.

- Maximum viscosity of the slurry at 30 wt% solids loading is 100 cP. Viscosity is not directly measured. It is controlled indirectly by the same methods used to control solids loading.

- The line is made of 10 cm (4 in), welded, schedule 40, 304L stainless steel. Design and performance attributes of the piping system are addressed in HNF-SD-W320-TI-008.
- The pipeline length is 0.5 km (0.3 mi).
- The line delivers slurry from Tank 241-C-106 to Tank 241-AY-102 via the slurry distributor.
- Flow velocity in the pipes is nominally 2.7 m/s (8.7 ft/s) and the flow is nominally 1325 L/min (350 gal/min).

Both of the primary transfer lines will meet the design, fabrication, installation, and testing requirements of normal service fluid (ANSI/ASME B31.3-1993, *Chemical Plant and Petroleum Refinery Piping*). As needed, thermal expansion elbows are placed for stress reduction and to follow topography (minimum bend radius 1 m [3.3 ft]). Stainless steel was chosen for corrosion resistance and for ease of decontamination in preparation for disposal following project completion.

2.4.1.8 Secondary Transfer Pipes. The secondary (encasement or outer) transfer pipes are of welded 15.2 cm (6-in.), schedule 40, carbon steel. The primary pipe is installed within the secondary pipe. The two secondary transfer (encasement or outer) pipes provide secondary confinement for the two primary transfer pipes. Both secondary transfer lines have provisions for leak detection at their low points. Additional leak detectors are provided within pump pit 241-C-06A, and sluice pit 241-C-06C. Any leakage collected at the transfer piping encasement low points or at the pits will be returned to Tank 241-C-106. Leaks to pump pit 241-AY-02A and sluice pit 241-AY-02E are monitored by existing leak detectors that alarm locally. The 241-AY-02A pit leak detector also alarms via the Computerized-Automated Surveillance System. Any leakage collected in these pits is returned to Tank 241-AY-102 by the respective pit drains.

The two pipe-in-pipe transfer lines are buried or bermed (a minimum of 0.9 m [3 ft] of earth cover between farms and 0.6 m [2 ft] of earth cover in farms) for freeze protection and to maintain personnel radiation exposure ALARA. This berm is an earth backfill and is covered with an aggregate stabilizer to prevent wind erosion. Each transfer line will be about 0.5 km (0.3 mi) in length and has been designed to slope continuously from 0.003 ft/ft to 0.10 ft/ft from Tank 241-AY-102 to Tank 241-C-106 to facilitate self-draining. This prevents any liquid stagnation in the lines during system shutdown. All transfer piping has a design operating temperature limit of 82 °C (180 °F) (WHC-SD-W320-TI-002).

2.4.1.9 Cathodic Protection System. A cathodic protection system is provided for the transfer lines to mitigate the effects of external corrosion.

2.4.1.10 Transfer Pits. The WRSS provides for new and modified waste transfer piping, pumps, flanges, jumpers, connectors, and instruments to be in the pits. The supernate is transferred directly to sluice pit 241-C-06C from Tank 241-AY-102. The 241-C-06A pit contains the slurry pump (P-1361), the slurry booster pump (P-1362), the slurry pump winch, and the slurry header

flow and pressure-measuring instrumentation. At the C Tank Farm, the sluicing pits 241-C-06A and 241-C-06C are used as transfer pits. At the AY Tank Farm, pump pit 241-AY-02A and sluice pit 241-AY-02E are used as transfer pits.

The sluicer winch assemblies, sluicer, and slurry distributor assembly have drains that are designed to accept the additional flow rate from a failure of slurry and/or supernate transfer lines and to drain the liquid to the associated tank. Leak detection instruments are provided to detect leakage inside the pits.

2.4.1.11 Syphon Protection. Syphon protection is required on the transfer piping because of an elevation difference of about 10.7 m (35 ft) between Tanks 241-C-106 and 241-AY-102. Properly sized anti-syphon holes (W320-27-045, *Pipe Drain Flow and Anti-Siphon Sizing for Transfer Lines*) are provided on the slurry distributor and the submersible sluice pump discharge line within Tank 241-AY-102 to prevent establishing a syphon when the slurry pumps or the sluice pumps are shut down. On the slurry distributor, two 1.3 cm (1/2 in) holes are provided to prevent syphoning of the slurry line, and two 0.6 cm (1/4 in) holes are provided on the discharge from the sluice pump. The larger-size holes are necessary on the slurry line since the likelihood of solids entrainment is greater there (pump suction screens out particles larger than 0.6 cm [1/4 in]). A syphon, if established, could drain back from Tank 241-AY-102 to 241-C-106 and could result in overfilling Tank 241-C-106 or, in the event of a failure of the transfer piping, a release of radioactive waste to the soil column.

2.4.1.12 Instrumentation and Control. Additional instrumentation (over and above that existing prior to WRSS) is required in both tanks, in the transfer lines between the tanks, and on the ventilation systems associated with both tanks. Also, communications between the control rooms at Tanks 241-AY-102 and 241-C-106 are required to ensure that shutdown functions are accomplished.

Tank 241-C-106 has instrumentation that monitors tank pressure to minimize the release of hazardous airborne particulates or gaseous material. Monitoring for tank vapor hydrogen concentration is also provided.

Leak detection is provided for the new transfer lines and the pump pits. Seismic shutdown switches are provided to reduce the volume of a spill from rupture of both transfer lines that could be caused by a design-basis earthquake. Mass flow rate, slurry density, and total mass flow are measured on the Tank 241-C-106 to Tank 241-AY-102 transfer line. Volumetric flow rate and pressure are measured at the discharge of the booster pumps on both transfer lines.

Temperature monitoring for Tank 241-AY-102 includes the capability to measure temperature at multiple elevations in the waste and the operation of existing thermocouples. A level gauge and a densitometer provide the capability to determine waste depth, sludge depth, and density of the fluid portion of the waste. Flow rate, temperature, and humidity monitoring on the 241-AZ-702 primary ventilation system is provided, and flow rate and temperature monitoring is provided on the annulus ventilation system. Hydrogen monitoring is provided for the Tank 241-AY-102 dome space.

2.4.1.13 In-Pit Closed Circuit Television Imaging System. A portable in-pit closed circuit television (CCTV) imaging system is provided to periodically monitor the interior of the process pits through access holes in the pit cover blocks. The system is used for determining pit conditions before opening for maintenance, leak verification, or inspection of equipment conditions.

2.4.1.14 In-Tank Imaging System. An in-tank imaging system, composed of a CCTV camera, mast assembly, a pan and tilt unit, and a shield/mounting plug, is provided within Tank 241-C-106 to locate the tank sludge accumulations during the sluicing operations and to ensure wastes are not exposed. The imaging panel contains the controls for positioning and illuminating the field-of-view for the in-tank CCTV system, as well as the cathode ray tube (CRT) displaying the in-tank view. This system also enables operators to aim the sluicer at the remaining waste sludge while minimizing the liquid level after the initial solids-removal increments.

2.4.1.15 Chemical Additions and Tank Sampling. Tank 241-AY-102 is accessible through riser number 15-O for chemical additions and for tank sampling. Chemicals (typically sodium hydroxide to adjust PH), are added through the riser as needed to enhance the compatibility of the waste in Tank 241-C-106 with that of the waste in Tank 241-AY-102. Chemicals added to Tank 241-AY-102 supernate are dispersed throughout the WRSS by normal operation of the pumping systems. Bulk chemical additions to Tank 241-AY-102 may be necessary to maintain tank chemistry within specified limits for corrosion control. Note that the addition of corrosion inhibitor (NaOH) is compatible with the need to maintain the alkalinity of the waste in order to avoid the potential for plutonium segregation. This is further described in Section 2.5.5.

2.4.1.16 Process Building Skid. The process building skid is located within Process Building 241-C-91. This skid consists of a condenser, a moisture separator, a heating coil, a recirculation fan, a HEME, and a HEMF. Gases from the Tank 241-C-106 headspace enter the ventilation system through a 25 cm (10 in) duct and are cooled by a propylene glycol/water mixture circulating through the condenser. Part of the flow is directed to the exhaust skid and the balance circulated through the moisture separator and heating coil before returning to Tank 241-C-106 through a 20 cm (8 in) duct to cool the tank. The exhaust gases are prefiltered through the HEME and HEMF. A 20 cm (8 in) valved connection is provided between the moisture separator and the heating coil on the recirculation line to allow a portable exhauster hookup for ventilation system outages.

Compressed air and raw water supply systems are provided to support operation of the ventilation system, such as backwashing the HEME and flushing the HEMF. A seal pot is provided to collect liquids from the condenser and from other equipment drains within the process building.

2.4.1.16.1 Condenser. The condenser (HX-1361) is a shell and tube type, designed to meet the requirements of ASME *Boiler and Pressure Vessel Code*, Section VIII, Division 1. The ventilation air stream, circulating on the shell side, normally is cooled to about 4.4 °C (40 °F) by the chilled-water cooling system, which circulates a 46% propylene glycol solution on the tube side. The condenser shell side has been designed for an air flow of 34.5 m^3/min (1220 ft^3/min), an inlet temperature range of 10 to 82 °C (50 to

180 °F), an outlet temperature range of 0.6 to 82 °C (33 to 180 °F), and an operating pressure range of -15 to -0.8 cm (-5.9 to -0.3 in) w.g. The condenser tube side has been designed for a coolant flow of 416 L/min (110 gal/min), an inlet temperature range of -0.6 to 32 °C (31 to 90 °F), and an outlet temperature range of 2 to 32 °C (36 to 90 °F).

2.4.1.16.2 Moisture Separator. The moisture separator (MS-1361) is a centrifugal mist eliminator that removes moisture droplets from the recirculation air stream by centrifugal force and gravity. Drains from the moisture separator are routed to the seal pot in the process building for return to Tank 241-C-106. Water droplet removal efficiency as a function of droplet size has been evaluated for the WRSS expected conditions and is documented in W320-H-015, *Sizing of Moisture Separator*. The moisture separator will remove 99.9% of all droplets greater than 10 microns and 60% of all droplets in the range of 2-10 microns.

2.4.1.16.3 Recirculation Heating Coil. The heating coil (HC-1361) is used to reduce the relative humidity of recirculating air and protect the recirculation fan from erosion by liquid aerosols. This equipment serves to reduce any fog formations in the tank vapor space to enhance visibility for the in-tank camera system. If fog formation does not occur, this coil would not be used, since some uncertainties exist regarding potential buildup of particulates in the tank vapor space with its use. The heating capacity is approximately 25 to 30 kW (85,303 to 102,360 Btu/h). Liquid drains from the heating coil and is routed to the process building seal pot for return to Tank 241-C-106.

2.4.1.16.4 Recirculation Fan. The recirculation fan (FN-1361) has a rated capacity of 27.6 m^3/min (996 ft^3/min) at a 40.6 cm (16 in) w.g. pressure differential. Drains from the recirculation fan are routed to the process building seal pot for return to Tank 241-C-106.

2.4.1.16.5 High-Efficiency Mist Eliminator. The HEME (HME-1361) is a cartridge-type moisture eliminator with a monofilament fiberglass filter bed designed for an air flow of 10.2 m^3/min (360 ft^3/min) at a face velocity of 9 m/min (30 ft/min), a temperature of 4.4 °C (40 °F), and a pressure of 98 kPa (14.2 psig). The removal efficiency rating of the HEME is 99.5% for particles 0.5 μm and larger, which removes any moisture carryover from the condenser. The filter housing is constructed of type 304L stainless steel and designed to meet the requirements of ASME *Boiler and Pressure Vessel Code*, Section VIII, Division 1. The HEME has provisions for periodic backwashing with filtered raw water to increase its efficiency; retained particulate material is returned to Tank 241-C-106 via the process building seal pot. The control for backwashing the HEME is designed to be either manual (controlled by an operator) or automatic (controlled by a timer). The HEME is provided with a bypass to allow for maintenance. This bypass cannot be used during operation since these valves are only accessible from inside the ventilation building.

2.4.1.16.6 High-Efficiency Metal Filter. The HEMF (HMF-1361) has several sintered metal fiber-type filters arranged cylindrically within a vessel and is designed for an airflow of 10.2 m^3/min (360 ft^3/min) at a temperature of 4.4 °C (40 °F) and a pressure of 95.8 kPa (13.9 psig). The HEMF acts as a prefilter for the HEPA filter (in the exhaust stream) and

removes at least 99.97% of 0.3 μm particles and greater. The filter housing is constructed of 304L stainless steel and is designed to meet the requirements of ASME *Boiler and Pressure Vessel Code*, Section VIII, Division 1. The HEMF has provisions for backflushing, using filtered raw water followed by a compressed air blowdown and drying of the filter media. Backflushing of the HEMF is manually initiated by the operator, as required, at a predetermined radiation level sensed by a local detector. The filtered water used for backflushing, and any particulate material removed, are returned to Tank 241-C-106 via a dedicated encased drain line through the 10 cm (4 in) R-4 riser. The HEMF is provided with a bypass to allow for maintenance. As with the HEME above, this bypass is not used for the backflushing. The liquid is returned to the tank by gravity.

2.4.1.17 Recirculation System. The 296-C-006 recirculation system removes heat from the Tank 241-C-106 vapor space, promotes visibility, and dehumidifies the recirculating air. The recirculation fan (FN-1361) provides air flow (including gases in the vapor space of the tank) in the recirculation path. The condenser (HX-1361) cools the air, condenses moisture in the airstream, and the condensate is returned to the tank. The moisture separator (MS-1361) removes moisture from the air stream. A recirculation system heating coil (HC-1361) is used to reheat the air to about 25 °C (77 °F) to decrease the relative humidity of the air stream and to provide some fog suppression before returning the recirculating air to the tank.

Air, at flow rates of 34.5 m^3/min (1220 ft^3/min), flows from Tank 241-C-106 through a 25 cm (10 in) combined recirculation and exhaust flow duct, circulates through the condenser, and returns to Tank 241-C-106 through a 20 cm (8 in) duct. The discharge of the recirculation fan splits into a 20 cm (8 in) recirculation pipe, with a flow rate of 24 m^3/min (860 ft^3/min), and a 15 cm (6 in) exhaust pipe, with a flow rate of 10.2 m^3/min (360 ft^3/min), 304L stainless steel. Ventilation system ducts are constructed from schedule 10, 304L stainless steel.

2.4.1.18 Process Building Drain and Seal Pot. A seal pot is provided on the process building drain line. It serves as a common collection point and seal for the condenser and other ventilation system equipment drains while preventing Tank 241-C-106 from venting into the process building. The overflow from the seal pot, which includes the HEME backwash waste water, is returned to Tank 241-C-106 via a dedicated encased drain line through the 10 cm (4 in), R-4 riser.

2.4.1.19 Chiller Skid. The chiller skid contains an air-cooled chiller and a chilled-water cooling system. The chilled-water cooling system consists of a makeup storage tank, an air separator, circulation pumps, an expansion tank, and instruments for monitoring the closed-loop cooling system. The circulating fluid (chilled water) is a 46% propylene glycol solution mixed with water circulated between the chiller and the recirculation system condenser. Chilled water may also be provided to the intake air cooling coil (CC-1361). The chilled water cooling system removes heat and dehumidifies the recirculating tank vapor by reducing the temperature of the vapor from about 35 to 4.4 °C (95 to 40 °F). In its alternate use with the existing ventilation system, it cools the bulk solid waste in Tank 241-C-106 to reduce

(before sluicing initiation) or maintain (during intermittent sluicing outages) waste temperatures below local saturation. The chiller skid is located outside the fenced area of the C Tank Farm.

2.4.1.19.1 Air-Cooled Chiller. An air-cooled chiller (R-1361) is used to remove heat that the chilled-water system gained from the recirculation ventilation system condenser, or with the existing ventilation system, from cooling ambient inlet air to 4.4 °C (40 °F) in the intake air cooling coil (CC-1361). The chiller is a complete factory assembled package, rated at 40 tons, with reciprocating compressors, condenser, refrigerant circuits, cooler, and controls. The chiller reduces the temperature of the chilled water returning from the recirculation condenser by about 2.7 °C (5 °F).

2.4.1.19.2 Makeup Storage Tank. The makeup storage tank (TK-1361) is pressurized by compressed air to provide the suction head required by the chilled-water circulation pumps and supplies makeup glycol solution for the chilled-water circulation system.

2.4.1.19.3 Air Separator. An air separator (TK-1363) is provided to remove air from the chilled-water circulation system. Air is automatically expelled from the air separator through a float-type air vent.

2.4.1.19.4 Circulation Pumps. Two 416 L/min (110 gal/min) centrifugal pumps are provided to circulate chilled water through the condenser or intake air-cooling coil (CC-1361) and the air-cooled chiller. One pump (P-1364) is designated the primary pump and the other (P-1365) the standby pump. Following failure of the primary pump, the standby starts. Each pump is provided with normally open isolation valves that allow pump maintenance while minimizing any effect on system operations.

2.4.1.19.5 Expansion Tank. The expansion tank (TK-1362) provides space for expansion and contraction of chilled water system fluid as the fluid temperature varies.

2.4.1.19.6 Circulation Piping. The 8 cm (3 in) circulation piping routes the chilled water to and from the condenser, located in the process building, or the intake-air cooling coil (CC-1361) on the existing ventilation system (valving change required) and the air-cooled chiller. The buried and insulated piping is Schedule 40 carbon steel with welded fittings.

2.4.1.20 Exhaust Skid. This skid directs exhaust through a heating coil, two HEPA filters with a test section for each filter, and an exhaust fan. This skid also includes an exhaust stack and exhaust-monitoring instruments. The exhaust ventilation system controls the pressure of the Tank 241-C-106 vapor space. The exhaust skid is located immediately east of the recirculation skid.

Air in-leakage, to make up for the exhausted volume, flows into Tank 241-C-106 from two pathways: (1) between pits and pit cover blocks into pits and then through pit drains into Tank 241-C-106 and (2) through the existing 8 cm (3 in) cascade line connecting Tank 241-C-105 to Tank 241-C-106.

2.4.1.20.1 Exhaust Heating Coil. A heating coil (HC-1362), located upstream of the HEPA filter train, has been designed to heat the saturated air and prevent condensation on the HEPA filters. The heating capacity is about 2 kW (6820 Btu/h). During normal operations the heating coil raises the air stream temperature from 4.4 °C to 21 °C (40 °F to 53 °F) and maintains a relative humidity of 60%.

2.4.1.20.2 High-Efficiency Particulate Air Filters. The HEPA filters are the bag-in/bag-out type, designed for a particulate removal mass efficiency basis of 99.97% of 0.3 μm particles and greater. This is achieved by using two HEPA filters (HEP-1361 and HEP-1362) in series. Each filtration stage has provisions for in-place testing while in use. A HEPA filter is required to be changed out whenever the pressure differential across the filter exceeds allowables or when the radiation measurement on the filter housing is about 2.0 mSv/h (200 mrem/h).

2.4.1.21 Exhaust Fan. The 296-C-006 exhaust fan is direct driven by a variable frequency, drive-controlled, 7.5-hp electric motor with a flow capacity of 10.2 m^3/min (360 ft^3/min) at 101.6 cm (40 in) w.g. Fan speed is modulated as required to control the vapor space pressure in Tank 241-C-106.

2.4.1.22 Exhaust Stack. The 15 cm (6 in) diameter exhaust stack extends to a height of about 5.2 m (16 ft) above the exhaust skid's concrete pad. The exhaust stack provides the point of discharge for the tank ventilation system. The primary exhaust air stream is sampled for radioactive particulate and monitored for radioactivity before discharge via the stack. The exhausted air stream is also monitored for flow.

2.4.2 Support Systems

The WRSS uses the existing tank farm support systems, modified as required to support Project W-320 requirements. Backup for the instrument air system is not provided. Backup power is provided for the AY Farm and the 241-A-702 and 4,000 cfm backup exhauster tank ventilation systems. Backup power for other systems will be provided, based on their safety function, as determined by the engineering analysis discussed in Section 4.2, "Requirements," of this addendum. Support services in the form of raw water, electrical power, telecommunications, and hoisting hardware, are provided. The use of portable facilities for sanitary sewage will be provided for the personnel using the control trailer.

2.4.2.1 Electrical Systems. Electrical power systems include AC power for Tank 241-C-106, Tank 241-AY-102, and Control Facility MO-211. All electrical equipment and components are selected, or protected, to resist the adverse effects of the environment in which they are installed. Electrical enclosures and junction boxes of the proper National Electrical Manufacturers Association rating and material are used to protect internal components from the corrosive effects of moisture and chemicals.

Power from the Hanford Site power grid is provided for Tank 241-C-106 by a 480 Vac, portable, skid-mounted substation on a concrete slab outside the fence near the 241-C Tank Farm. The existing 13.8 kV pole line (C8-L6) is

extended from the pole line on the north side of the 241-C Tank Farm to the east side of the 241-C Tank Farm. The new substation includes a transformer, switchgear, and a motor control center.

The sluice pump located in Tank 241-AY-102 is supplied with 480 Vac power from the existing 13.8 kV pole line (C8-L6). This line is tapped to supply a new 13.8 kV to 480 V transformer. The motor control center and variable speed drive are located on a skid-mounted (241-AY-51) enclosure outside the 241-AY Tank Farm.

2.4.2.2 Air Supply Systems. The existing compressed air system serving 241-C Farm will not be used by the WRSS. The compressed air system provided by WRSS distributes air at various pressures, providing a source of dry instrument-quality air to various components of WRSS. Compressed air for the WRSS is provided by a compressor and receiver unit (C-1361) rated at 0.8 m^3/min (27.5 ft^3/min) and 690 kPa (100 psig). Moisture is removed from the system by an air dryer (D-1361) that will lower the dew point to -40 °C (-40 °F). The compressor unit and dryer are located in Air and Water Service Building 241-C-73. Pneumatically operated valves are supplied with either 550 kPa or 690 kPa (80 or 100 psig) as required. Blowdown and drying air to the HEMF are provided at 690 kPa (100 psig) via a 113.6-L (30-gal) air accumulator (TK-1361) located in Process Building 241-C-91. Additionally, purge air is provided at 140 kPa (20 psig) for Tank 241-C-106 level and pressure instrumentation. Backup systems are readily available in the form of either portable or stationary compressor units.

2.4.2.3 Water Supply Systems. All water for the 200 East Area is supplied from the Hanford Site Export Water System. Water is distributed throughout the area by two separate systems: the raw water system and the sanitary water system. Raw water is untreated, unchlorinated water used primarily for cooling, flushing, and dilution systems. Sanitary water is treated (filtered, purified) and used for drinking and sanitary facilities.

The WRSS has been designed to have flushing capability using raw water for all components. Raw water is provided from an existing 30 cm (12 in) fire water line through a new 5 cm (2 in) supply line into Air and Water Service Building 241-C-73 where it passes through a 20 mesh duplex strainer (F-1363). Two backflow preventers in series minimize the potential for contamination. These backflow preventers (BP-1361 and BP-1362) are located in Air and Water Service Building 241-C-73 and Process Building 241-C-91. Raw water, used for either backwashing the HEME or flushing the HEMF, is passed through two stages of filtration to remove any particulate material. The first stage is a nominal 30 μm filter (F-1361) followed by a second stage 0.5 sum absolute filter (F-1362). Between these two filters is a line used for flushing or rinsing the intake imaging system.

Pump pits 241-AY-02E and 241-AY-02A provide for water flushing of the primary transfer piping (inner pipe). Backflow prevention is provided in the flush jumper system. This flushing water is supplied by tanker truck.

During an emergency, cooling water for the condensers in the AWF ventilation system, 241-A-702, is provided by the emergency cooling water system. This system consists of a cold water sump and a warm water sump, each

with two pumps, and an induced draft cooling tower, all located outside of the restricted area east of the 241-A-401 Condenser Building. Makeup water for the cold water sump is obtained from well 299-E25-6 located about 268 m (880 ft) north of the 241-A-CT-400 cooling tower. The deep well pump and emergency cooling water equipment has standby power from a backup diesel generator.

2.4.2.4 WRSS Control Station. The WRSS control station, located just outside the 241-C Farm fence on the North East side of the farm, is in a 3.7- by 3.7-m (12- by 12-ft) room and contains control consoles for the WRSS. One console is for the CCTV (CP02), one console is for controlling C Tank Farm pumps, winches, and the sluicer (CB-01), and one console is for annunciation and indication of process variables. The control station is designed for one operator.

2.4.2.5 241-AY-02E Pit Chiller. A pit chiller is provided at the 241-AY-02E Pit to remove the heat generated by the operation of the Booster pump and control the pit air temperature within equipment operating limits. The chiller is a split system consisting of a fan coil unit mounted within the pit (FC-0621) and a packaged outdoor air cooled water chiller (R-0621). The outdoor unit provides a chilled 46% propylene glycol/water solution to the fan coil unit and includes fan controls and other system instrumentation. A similar system is not required at the C-farm pump pit due to the larger size of the pit.

2.4.2.6 Standard Hydrogen Monitoring System. Standard Hydrogen Monitoring Systems (SHMS) are provided at both Tanks 241-C-106 and 241-AY-102. The SHMS are used to continuously monitor the gas composition of the tank vapor space. Gas samples are collected from the tank dome space at Tank 241-AY-102 and from the ventilation ducting at Tank 241-C-106.

The SHMS are provided with dual range electrochemical cells for measurement of hydrogen concentrations in the range of a few hundred ppm-volume to above the flammable limit of 4%-volume. The SHMS also include sensitive gas chromotographs to measure concentrations of hydrogen and other gases in the range of a few ppm to above the lower flammability limit. Sample ports are provided at the SHMS Cabinets to facilitate grab sampling. The SHMS provides alarms and indications at both TMACS and the W-320 control rooms.

2.4.2.7 Tank 241-C-106 Pit Sump Pumps. Sump pumps are provided at both of the Tank 241-C-106 transfer pits. Sump Pump P-1363 is located in the 241-C-06A pit and Sump Pump P-1368 is located in the 241-C-06C Pit. The sump pumps provide a means to evacuate liquid accumulated with the transfer pits following detection of a leak. When a leak is detected an operator manually energizes the sump pump. The sump pump transfers the collected liquid from the pit floor back into the tank via the high capacity drain.

2.5 PROCESS DESCRIPTION

The following section describes the WRSS operation plans and the process control plan. The text of Section 2.5 commits to a prescribed process control plan (PCP) and summarizes the content of the PCP. The PCP, in turn,

implements processes and controls that are contained in the flammable gas, thermal, and chemistry topical reports. TSRs and Defense-In-Depth controls are implemented by the PCP and are summarized in Sections 3.4.2.8 and 3.4.2.11 of this addendum for flammable gas and thermal issues. This includes controls for monitoring and for contingencies such as supernate removal.

The section contains four subsections. The first subsection, Sluicing Preparations, discusses the activities that will be accomplished in advance of the first sluicing operations to prepare the tank for sluicing and to acquire information needed for process control.

The second subsection, WRSS Operations, discusses the Sluicing Campaign Plan and the integration of all associated process monitoring instrumentation and controls. The various operating modes of the WRSS system and contingency plans are also discussed in this section.

The third subsection, Supporting Operations, discusses the non-WRSS operations activities that support the operations of the WRSS, chemical additions and sampling.

The fourth subsection, Past Practice Sluicing Lessons Learned, outlines historical problems and equipment sensitivities associated with past practice sluicing activities at Hanford's 200 Area.

2.5.1 Sluicing Preparations

The presluicing operations activities needed to acquire information necessary for process control and to prepare the tank for sluicing are discussed below.

2.5.1.1 Tank 241-C-106 Ventilation Waste Subcooling. As documented in HNF-SD-W320-ER-002, *Project W-320 Thermal Evaluation*, the sludge in Tank 241-C-106 will be subcooled (the temperature reduced to below the local saturation temperature) to prevent a steam release event from occurring. This subcooling is accomplished by operation of the existing Tank 241-C-106 exhauster (296-P-16) in combination with the inlet filter cooling coil and chiller system provided by the WRSS. The cooling coil cools the air entering C-106 to approximately 4 °C (40 °F). This cooled inlet air helps to reverse or prevent the increase of tank waste temperatures resulting from higher temperatures in summer.

2.5.1.2 WRSS Supernate Temperature Equalization. A number of small supernate liquid transfers will be required between the two tanks to equalize the temperatures in the tank liquids. The number and volume of transfers to accomplish the equalization will be dependent on the initial liquid volume in Tank 241-C-106 and its initial temperature. This equalization procedure will be performed only before start of WRSS operations or after extended delay periods between sluicing increments, if the temperature differential between the tanks would result in exceeding existing control limits. Normal WRSS operations will provide temperature equalization during sluicing.

2.5.1.3 WRSS Temperature/Thermal Data Baselines. To establish the startup thermal baseline for Tanks 241-AY-102 and 241-C-106, the temperatures in both tanks will be monitored for a period of not less than one month in advance of the start of sluicing operations. This thermal baseline will be compared to the project thermal analysis before the start of sluicing to ensure that the baseline is within the assumptions envelope of the analysis.

2.5.1.4 WRSS Flammable Gas Generation and Composition Baselines. The flammable gas concentrations will be monitored in Tanks 241-AY-102 and 241-C-106 for a period of not less than four weeks before the start of sluicing to establish the flammable gas baselines. The baseline will also include the flammable gas compositions for the tanks based on vapor space sampling results.

2.5.1.5 Tank 241-AY-102 Supernate Level Adjustment Transfer. Using the existing 241-AY-02D pit transfer pump, the waste level in Tank 241-AY-102 will be reduced before the start of sluicing to approximately 4.3 m (14 ft) by a transfer of supernate to a double shell receiver tank through the existing transfer system. This level includes the existing sludge in the tank.

2.5.2 WRSS Operations

2.5.2.1 WRSS Sluicing Campaign Plan Overview. The planned approach to remove the sludge from Tank 241-C-106 is discussed in the following section.

The following definitions are used to describe the planned sluicing operations:

- Campaign—Refers to the combination of sluicing increments. Each increment requires one or more sluicing batches which remove a given volume of sludge from Tank 241-C-106. The nominal volume of sludge transferred in each of the first and second campaigns is approximately 250 m^3 (66,000 gal). The third campaign is intended to remove all of the remaining sluicable sludge in Tank 241-C-106, but the volume of this campaign is expected to be less than 250 m^3 (66,000 gal).

- Increment—The sluicing increment refers to the 125 m^3 (33,000 gal) increments of sludge. The volume in a sluicing increment is equivalent to nominally 0.3 m (1 ft) of tank level. Therefore, two sluicing increments represent a transferred sludge volume equivalent to a nominal sluicing campaign. The increment size was selected based on estimates of the magnitude of "worst case" thermal conditions or flammable gas releases which could be accommodated in a single transfer.

- Batch—The sluicing batch is the smallest sluicing element. It is a single continuous or nearly continuous sluicing operation, the duration of which is controlled by either the accumulated volume of transferred sludge reaching the desired value, or the maximum sluicing batch time limit being reached, whichever occurs first. If the sluicing process can operate at the optimum efficiency, only one

sluicing batch is required to transfer one sluicing increment. Under less optimal conditions, two or more sluicing batches may be required to complete one sluicing increment.

2.5.2.1.1 First Sluicing Campaign. The first sluicing campaign retrieval operation is characterized by a requirement to maintain a specified liquid cover over the sludge in Tank 241-C-106 and the requirement to limit the amount of material transferred (HNF-SD-W320-ER-004). The liquid cover requirement is needed only during the first campaign to maintain saturation temperature suppression by hydraulic head (HNF-SD-W320-ER-004).

Completion of the first retrieval campaign is estimated to eliminate the need to add water to Tank 241-C-106 to maintain temperature control (HNF-SD-W320-ER-004). However, active ventilation will still be required to maintain the tank within its required temperature limits. It is, therefore, projected that completion of the first campaign will result in the removal of enough heat generating waste to resolve the Tank 241-C-106 high heat safety issue.

Sluicing Increments. The first sluicing campaign is projected to include two, approximately 124,900 L (33,000 gal) sluicing increments. The 124,900 L (33,000 gal) increment size was selected for two reasons. The first reason for establishing the 124,900 L (33,000 gal) sluicing increment is to achieve conservatism in the Tank 241-AY-102 temperature process control. HNF-SD-W320-ER-004 predicts that Tank 241-AY-102 will remain within temperature limits without the need for tank annulus ventilation, even if the heat load and waste fluffing in the initial 124,900 L (33,000 gal) of transferred sludge are greater than the range of probable values. The second reason is based on past practice sluicing experience that showed the maximum liquid cover through which sluicing could be effectively achieved was 22.9 to 30.5 cm (9 to 12 in).

After waiting the required period for analyses to show that adequate subcooling has occurred, the minimum liquid level/sludge cover control level will be reduced for each succeeding sluicing increment.

Sluicing Batches. Each of the above sluicing increments will be made up of several sluicing batches. The sluicing batch operational approach is used to provide assurance that inadvertent transfer of an excessive amount of heat-generating material (greater than the 124,900 L [33,000 gal] increment volume) into Tank 241-AY-102 does not occur.

The sluicing batch durations will be limited by two parameters: (1) the total sludge transferred as determined by the mass flow meter and (2) a maximum sluicing duration based on mass flow meter instrument uncertainty. These two values will be specified in the process control plan. The values may be subsequently modified based on WRSS operational experience.

2.5.2.1.2 Monitoring During and After the First Sluicing Campaign (Increment and Batch). Following the completion of the first sluicing campaign, a period of monitoring will be instituted prior to initiating any following sluicing operations. The monitoring period durations and requirements are discussed below. If a sluicing batch or increment completion

is concurrent with the next large-sized sluicing element, then the more extensive monitoring requirements from each will take precedence. Parameters to be monitored between sluicing batches include:

- Gas release rates (SHMS)
- Waste levels (ENRAF)
- Sludge level (ENRAF Densitometer)
- Waste temperatures (TC trees, Multifunction Instrument Tree, Air Lift Circulator TC's, and under-tank TC's)
- Annulus ventilation flow rate and inlet and outlet temperatures
- Dome space ventilation flow rate, inlet and outlet temperatures, relative humidity, and chiller performance

Specific monitoring requirements are contained in the process control plan and are summarized in the following paragraphs.

Post-Batch Monitoring. The post-batch monitoring period will extend for a minimum of three days following each batch. The batch monitoring durations are established by the solids-settling velocity reported in HNF-SD-WM-TI-756, *Chemical and Chemically Related Considerations Associated with Sluicing Tank C-106 Waste to Tank AY-102*, which is such that the initial settling period will be completed and a distinct sludge-supernate interface will have formed in Tank 241-AY-102.

During the monitoring period, the volume of Tank 241-C-106 sludge transferred to Tank 241-AY-102 will be calculated using ENRAF densitometer density profile data and Tank 241-AY-102 grab samples analysis results. This estimate will be compared with the mass flow meter totalizer readings. The monitoring period duration may also be extended until adequate confidence is established in the estimated sludge volume/heat load transferred. For example, if sludge settling takes longer than expected, a longer monitoring period will be required to establish volume and heat load values since these values are highly dependent on sludge depth.

Post-Increment Monitoring. The post increment monitoring period will extend for a minimum of seven days following the completion of each increment. The increment monitoring durations are established in the WRSS process control plan.

At the completion of each sluicing increment, an updated thermal baseline for both the tanks is established prior to proceeding with further sluicing. All of these considerations have some bearing on how subsequent retrieval actions will be performed, perhaps determining if they can be performed at all.

During the increment monitoring period, the sludge volume will be calculated as discussed above. In addition, tank thermal data will be

collected and reviewed to verify that anticipated thermal responses are occurring. Deviations from the anticipated responses will be evaluated.

Post-First Sluicing Campaign Monitoring. The post-first sluicing campaign monitoring period will extend for a minimum of two weeks following the completion of the campaign. The increment monitoring durations are established by LA-UR-97-1330. Both thermal and flammable gas process parameters will be monitored during this period.

2.5.2.1.3 Second Sluicing Campaign. This sluicing campaign will be identical to that described in Section 2.5.2.1.1, except that there is no requirement to maintain a minimum hydraulic head on Tank 241-C-106 sludge by means of a minimum liquid cover. This will permit operation of both the sluicer and slurry submersible pump in the optimum position to maximize sluicing efficiency.

Both temperatures and gas retention in Tank 241-AY-102 depend on the vertical distribution of heat generating isotopes after the waste transfers. This vertical distribution, in turn, depends on the degree of isotope stratification in Tank 241-C-106, and the degree of mixing created by the sluicing jet in Tank 241-C-106. The waste in Tank 241-C-106 may be highly stratified. For example, grab samples collected during 1996 show a fairly low and relatively uniform isotopic heat content in the upper approximate 4 ft of waste, with one interpretation being that most of the heat generating isotopes may be in the lower 2 ft (HNF-SD-WM-TI-756). However, process data from when the tank was filled show two relatively high isotopic layers, one at approximately 0-2 ft from the top and one at approximately 1-3 ft from the bottom of the tank (HNF-SD-W320-ER-004).

The sluicing strategy of the second sluicing campaign will be planned to minimize Tank 241-AY-102 waste temperatures and gas retention during subsequent waste transfers. For example, higher temperatures would occur if the heat generating isotopes were in a stratified layer at mid-depth in the sludge of Tank 241-AY-102, than if they were at the top or mixed throughout (HNF-SD-W320-ER-004).

Based on monitoring results of the quantity of heat generating materials transferred to Tank 241-AY-102 and remaining in Tank 241-C-106 after the first sluicing campaign, and model predictions, the depth of localized sluice jet penetration in Tank 241-C-106 will be adjusted to the extent practicable to optimize the subsequent waste transfers. This can be done by either excavating deeper in one area of the tank, or conversely, by removing a layer of more uniform thickness from the surface of the sludge.

2.5.2.1.4 Post-Second Sluicing Campaign Monitoring. The monitoring during this period will be identical to that discussed in Section 2.5.2.1.3, with the exception that Tank 241-C-106 will no longer require special thermal evaluation because the potential two phase zone in the tank will have been eliminated by the removal of two feet of waste.

2.5.2.1.5 Final Sluicing Campaign. This sluicing campaign will be identical to that described in Section 2.5.2.1.3.

2.5.2.1.6 Long-Term Monitoring. The waste in Tank 241-AY-102 is monitored to ensure that the waste remains within the tank's operating specifications and applicable Technical Safety Requirements (TSRs) for waste storage. Monitoring is specified through the process control plan which describes the requirements for the incremental transfer and monitoring.

The WRSS equipment has a design life of two years, although actual sluicing operations should take about one year to complete. The life of the in-tank pumping systems have been reevaluated with a preliminary result of approximately 4 years (with flushing of the transfer system). After the retrieval operation is complete, equipment installed in the tanks for WRSS operations and the waste transfer lines remain in place until decommissioning by a follow-on project, or disposal activities remove them. Other project waste would be disposed of in a properly sited landfill or hazardous waste facility in accordance with all applicable state and federal guidelines.

2.5.2.2 WRSS Sluicing Operation Control. The following discussion provides details on the sluicing operation control considerations and the associated bases that are implemented in the above discussion of the sluicing campaigns and associated monitoring.

2.5.2.2.1 Slurry Solids Loading Process Control. The solids loading in the slurry line is monitored using two real-time process control instruments discussed below.

The principal solids loading process control instrument is the 241-AY-02A pit mass flow meter. This instrument provides a direct indication of the slurry loading in the slurry line at the receiver tank end of the transfer line by measuring the density of the slurry. Knowledge of the solution density (obtained from either the ENRAF densitometer or grab samples) is required to support determining the slurry solids loading.

An additional indication of slurry solids loading is provided by the slurry flow rate measured by the mag-flow meter installed in the 241-C-06A pit. This instrument provides an indirect measure of the solids loading. The utilization of the slurry flow rate will require fixing the slurry booster pump speed setting as follows.

The slurry booster pump speed is set for a flow of 1325 L/min (350 gal/min) assuming a 0% solids loading. As the solids loading increases, the slurry flow rate is estimated to decrease approximately 4 gal/min for each 1% solids loading change. The sluicing operator will monitor this flow rate to determine the effectiveness of the sluicing operations. To assist the operator in controlling the slurry loading at a level that will not potentially allow transfer lines solids settling, the flow rate for a 20 wt% solids loading will cause an alarm to sound. The response to this alarm will be to take action to avoid a future solids loading increase or to reduce the solids loading to below 20%. The following process control actions to reduce the solids loading would be implemented incrementally in the listed order to the extent required to reduce the solids loading to below 20%:

(1) Raise the submersible slurry pump level.

(2) Direct the sluice stream to the area of the submersible slurry pump intake to dilute the solids entering the pump.

(3) Increase the pump speed to achieve a 1700 l/min (450 gal/min) flow rate until the higher solids content slurry clears the system. Note: This action would have to be reversed as soon as the higher slurry content stream cleared the transfer line to reestablish the slurry loading process control pump speed setting.

2.5.2.2.2 Sludge Volume/Heat Load Transfer Process Control. The sludge volume transferred from Tank 241-C-106 to Tank 241-AY-102 is monitored in real time using the mass flow meter located in the 241-AY-02A. The solids volume transferred is used to estimate the approximate heat load transferred between the two tanks.

After the sludge transfer, a material balance is performed using the monitoring data from both tanks (i.e., levels, temperatures, ventilation flow, temperature, and humidity data) to refine the thermal analysis baseline (HNF-SD-W320-ER-004) and verify that subsequent sluicing operations can be accomplished safely.

2.5.2.2.3 Flammable Gas Process Control. The phenomena related to flammable gas generation, retention, and release have been evaluated for transfer of the Tank 241-C-106 sludge to Tank 241-AY-102 (LA-UR-97-1330, *Discussion of Flammable Gas Issue for Project W-320*). A presluicing flammable gas baseline with a four-week monitoring period, using the Standard Hydrogen Monitoring Systems (SHMS) instrumentation installed on the tanks, will be established for Tanks 241-AY-102 and 241-C-106. The flammable gas baselines will include flammable gas release rates, flammable gas compositions, and rate projections for these rates at key points in the planned sluicing operations. Data evaluations include the following:

- Gas concentrations and ventilation rates in both tanks
- An accurate accounting of all materials introduced into or removed from the tanks
- Video monitoring of the Tank 241-AY-102 waste surface for indications of foaming or crust formation during the initial sluicing operations
- Headspace grab sampling at Tank 241-AY-102
- Liquid level monitoring in both tanks (Tank 241-C-106 monitoring is limited to nonsluicing periods)
- Tank 241-AY-102 sludge settling monitoring (densitometer and/or multi-functional instrument tree)
- Evaporation rate determined by ventilation flow rate and relative humidity.

Subsequent flammable gas monitoring will continue throughout the WRSS operations. Data from this monitoring will be compared to projections and significant deviations will be evaluated to determine if mitigative actions are warranted.

Process monitoring during the period between sluicing batches, increments, and campaigns will be the same as discussed under baseline development above. The data relating to gas retention in the Tank 241-AY-102 sludge will be carefully evaluated during the hold periods between sluicing increments and campaigns. If this evaluation identifies a potentially unacceptable flammable gas buildup, then the void fraction measurement instrument would be deployed as described in section 2.5.2.3.8. If the void fraction instrument confirms the flammable gas buildup condition, the tank excess supernate removal contingency plan would be implemented. As discussed in LA-UR-97-1330, the primary mitigation option selected is the removal of the Tank 241-AY-102 supernate. A summary of the process control for flammable gas is contained in the following discussions.

Assuming that the transfer-induced degassing stops immediately after the transfer, the gas concentrations in the headspace of Tank 241-C-106 should exhibit exponential decay. Because the gas generation in Tank 241-C-106 is reduced by sludge transfer, the headspace gas concentration in this tank will exponentially decay below the baseline concentration established before sluicing.

Waste (tank) level and flammable gas concentration are monitored in Tank 241-AY-102. The waste level and background hydrogen concentrations will equilibrate within two to four weeks. The void fraction of the sludge can be estimated by comparing the background hydrogen concentration transient with the steady state concentrations using the level rise. During this time, barometric pressure evaluation (BPE) may also be deployed to obtain additional data. Sludge density measurements using the ENRAF densitometer and the sludge thickness measurements using the same instrument along with the multi-functional instrument tree validation probe will also be required.

Using the gas inventory data from Tank 241-AY-102, a decision will be made to either transfer more waste or spend additional time evaluating the situation. Sluicing in the presence of a gas inventory indicating a buoyancy instability requires implementation of a mitigation plan to remove the excess supernate from the tank. If the gas inventory estimates contain large uncertainties (as defined in the WRSS process control plan), the void fraction instrument must be deployed to measure the gas inventory at a few locations in Tank 241-AY-102. If a level swell of more than 10 cm (4 in), corrected for evaporation, is detected and high voids are indicated by the void fraction instrument, the supernate in Tank 241-AY-102 will be removed. The decision to remove the supernate will be based on the calculated potential for a buoyancy induced rollover. Such a calculation will include the total data gathered such as gas release rates, level growth, barometric pressure evaluations, void fraction measurements. The measurements are described in reports LA-UR-97-1330 and PNNL-11627, *Monitoring Gas Retention and Slurry Transport During the Transfer of Waste from C-106 to AY-102*, and will be implemented in the PCP.

2.5.2.2.4 Liquid Level Process Control. Until the steam bump accident concern is eliminated, the liquid level in Tank 241-C-106 will have to be controlled at or above a set level to avoid affecting the subcooling provided by the hydraulic head of the liquid in the tank. The minimum liquid level is established to maintain the measured temperature of the waste at all locations below the local saturation temperature. The minimum liquid level to maintain safe operations is maintained through a TSR level control (AC 5.26).

The liquid level in 241-C-106 can not be monitored using the ENRAF liquid level instrument because this instrument will be shut down during sluicing operations to avoid damage by the sluice stream. Therefore, this measurement will be made using the lower liquid level sensor on the submersible slurry pump. As a backup to the above level control, the liquid level in Tank 241-AY-102 will also be controlled using the ENRAF liquid level instrument from that tank and the variable speed sluice booster pump.

The minimum liquid cover/hydraulic head control requirement will be eliminated after the first sluicing campaign as discussed in WHC-SD-WM-ER-588.

2.5.2.2.5 Leak Prevention/Minimization Process Control. The routine sluicing operations remove the sludge from Tank 241-C-106 while minimizing the potential for leakage during these operations. Leak potential is minimized in two ways.

The first planned leak prevention/minimization method is to limit the standing liquid volume in Tank 241-C-106 during sluicing operations to the extent possible, given thermal concerns and related process control limitations. The limiting of the standing liquid volume in Tank 241-C-106 will be accomplished using operating procedures which administratively control sluicing operations to the minimum practical liquid level consistent with 1) the minimum liquid level required to maintain subcooling (applicable during the removal of the first 0.6 m [2 ft] of sludge) and 2) protection of the pump from cavitation. Liquid level control is as specified in Section 2.5.2.2.4 above.

The second leak prevention/minimization methodology is to avoid directing the sluice stream toward the tank walls during the early stages of sluicing. The perimeter of the tank will be sluiced last to minimize the amount of material that could leak through the tank wall as a result of sluicer impingement.

2.5.2.2.6 Temperature and Thermal Process Control. The process control methodology is based on thermal considerations in both Tanks 241-C-106 and 241-AY-102. The conclusions of the WRSS Thermal Evaluations (HNF-SD-W320-ER-004) follow.

- The minimum WRSS objective of retrieving 0.6 m (2 ft) of waste from Tank 241-C-106 does not require operation of the Tank 241-AY-102 annulus ventilation system.
- Accumulation of the equivalent of 0.6 m (2 ft) of Tank 241-C-106 sludge in Tank 241-AY-102 is possible without modifications to the annulus ventilation system of Tank 241-AY-102. However, as a

Defense-In-Depth precaution, annulus blocking has been implemented. The capability to draw a high annulus vacuum along with annulus blocking will be provided, to provide margin for waste transfers beyond the first 0.6 m (2 ft) (such as could be needed if a leak were to develop in 241-C-106 during the initial sluicing increment). Additionally modifications to the secondary ventilation system (air inlet blower and/or chiller) may be implemented depending on the tank thermal behavior resulting from the first 0.6 m (2 ft) of sludge transfer. (Section 2.3.6.)

- Incremental sluicing with real-time mass control and monitoring will limit the thermal response caused by the heat-generating material added to Tank 241-AY-102.

- By evaluating the monitoring data with a transient thermal analysis, the steady state equilibrium temperatures can be predicted. Based on this prediction, sluicing can proceed without delays required to reach thermal equilibrium.

- Adequate subcooling can be maintained in Tank 241-C-106 with presluice chilling of the waste and incremental sluicing with hold periods for subsequent cooling before removing the hydrostatic head. The hold periods for cooling were established by thermal modeling.

2.5.2.2.7 Submersible Pump Elevation Process Control. Controls for the Tank 241-C-106 slurry pump system are provided at the MO-211 sluicing control room operators control panel. This panel has the controls for the pumps and pump winches, and indicates pump operational status and positions. The submersible slurry pump winch also has a lockout feature for its "lower" function which will be used in combination with pump shutdown interlock for the lower liquid level sensor mounted on the body of the submersible slurry pump to ensure that the liquid head on the sludge in the tank is not lowered during the first sluicing campaign.

2.5.2.2.8 Sluicer Aiming Process Control. A sluicer is provided for mobilizing the sludge in Tank 241-C-106 to transfer it as a slurry to Tank 241-AY-102. The sluicer will operate in sluice pit 241-C-06C through the 30 cm (12 in) riser R-3.

The sluicer has two control modes: manual and semiautomatic. The control system is based on nozzle position information obtained from magnetostrictive actuator position indicators. In the manual mode, the operator moves the joystick to position the nozzle in elevation (tilt) and azimuth (pan). In semiautomatic mode, the pan position constantly cycles between two set points on the meter relay. Tilt is set by the joystick, and then the joystick is administratively disabled. The pan cycle is limited to ±97°. The meter relay and related set point adjustments are limited to ±95° to avoid affecting the mechanical motion limits. The vertical motion is physically limited to +115° from 0° (straight down). Procedural controls avoid affecting the physical limits of tilt.

The sluicer will be used to direct waste to the suction of the slurry pump. It is anticipated that the tank wall adjacent to the submersible slurry pump will be exposed as a result of the slurry flowing into the pump intake.

The MO-211 control room features a main instrumentation control console, and consoles for the data acquisition system (DACS). The main instrumentation console is built around a sluicing panel, which contains the controls necessary to position the sluicer spray impact location within Tank 241-C-106. These controls feature a keyboard and a joystick controller for the positioning of the operating sluicer. The position of the impacting sluice stream will be indicated by a sluicer positioning device.

2.5.2.2.9 In-Tank Imaging System Monitoring. The MO-211 control room features an imaging panel containing the controls for positioning and illuminating the field-of-view for the in-tank CCTV system, as well as the CRT displaying the in-tank view from the CCTV imaging system. The in-tank CCTV imaging system that provides near real-time pictures or waste-surface-contour depictions during sluicing operations will be used to help control and direct the sluicing operations. It consists of a remotely controlled television camera and illumination source mounted in riser R-7 of Tank 241-C-106. Although it is not absolutely necessary for sluicing operations, the CCTV system is intended to locate any sludge accumulations, and allow for optimum sluicer aiming while minimizing the volume of liquid resident in Tank 241-C-106. Sluicer operation is mainly guided by azimuthal and vertical directional controls.

The in-tank CCTV system is composed of a TV camera, mast assembly, a pan and tilt unit, and a shield/mounting plug. The mast assembly includes a pressure-regulated supply of instrument air/nitrogen and associated enclosure control valves, a pressurized filtered raw water enclosure and associated enclosure control valves, and video processing electronics and associated wiring. The mast assembly is constructed of 304L Series stainless steel and includes a pan and tilt unit, a charge coupled device (CCD) camera, and high-efficiency metal halide focused-beam lamps, and will fit into a 30 cm (12 in) riser. The pan and tilt unit provides for a 360° field of view with a -90°/+30° elevation. The purge gas supply provides instrument cooling and condensation removal. The water supply provides camera lens and mast cleaning.

2.5.2.2.10 Modifications to Process Controls. The uncertainty in the characterization and dynamic behavior of the wastes contained in the WRSS is such that operational experience may show some deviation from predicted system behavior. Because of this, a performance baseline must be reestablished following every sluicing increment and the predictive models used for the WRSS must be modified to reflect the observed behavior. All anticipated conditions related to the WRSS operations have been included in this analysis.

2.5.2.3 WRSS Operating Modes and Contingency Plans. The following sections include discussions of the major operating modes of the WRSS and several contingency plans which have been developed to ensure the WRSS operations are prepared to respond to the identified off-normal operations.

2.5.2.3.1 Sluicing Startup. During the start of sluicing operations, the slurry pump is used to decant the supernate in Tank 241-C-106, to Tank 241-AY-102, so that the supernate level is 183 cm (72 in). The slurry pump is then positioned so that its low-level detector is located at 178 cm (70 in). The sluice pump is started and the sluice stream is aimed to agitate the area around the slurry pump intake. This startup mode of operation ensures that an acceptably low solids content (estimated at 10% or less) is present in the solution around the slurry pump intake when it is started.

Next, the slurry pump will be started and the associated slurry flow rate and pressure instrumentation continuously monitored until a stable slurry loading is achieved. The solids level in the slurry line is monitored using the mass flow meter installed in the AY Farm end of the slurry line. As a backup, the slurry pump discharge pressure and volumetric flow rate can be used as a gross indication of excessive solids loading in the slurry transfer line. This would be evidenced by either the flow rate decreasing towards the limiting low value, or the pump discharge pressure increasing towards the limiting high value expected for the slurry. The response would be to reposition the sluicer to impact at a less efficient location for slurry formation, and the slurry booster pump could be raised to a less efficient elevation. For follow-on sluicing campaigns where the liquid level is not constrained in Tank 241-C-106, the ENRAF level gauge in Tank 241-AY-102 can be used as a gross volumetric estimate of the sludge transferred. Nominally, a given volume of sludge transferred from Tank 241-C-106 will displace the same volume of supernate in Tank 241-AY-102. However, factors such as waste fluffing and settling rate will affect this assumption. The relationship between solids percentages and viscosity has been defined for this application by the project functional design criteria (HNF-SD-W320-FDC-001).

At a constant slurry velocity, as the solids percentage increases, the flow rate will decrease approximately 15 L/min (4 gal/min) per 1% solids loading change and the pump discharge pressure will increase. Changes in the slurry composition sufficient to effect a noticeable change in the pump parameters should also be indicated by the slurry mass flow meter and associated net flow computer (NFC). Therefore, the slurry line mass flow meter is the primary online process control tool. The mass flow meter may be backed up by the slurry line volumetric flow meters, the ENRAF level gauge in Tank 241-AY-102, and the discharge pressure and low-limit detector of the slurry pump suction, depending upon the applicable thermal-hydraulic constraints currently in effect.

These procedures do not apply to the solids level in the sluice stream, since a rapid buildup of high solids loadings cannot occur in the large volume of Tank 241-AY-102 supernate. The sluice pump flow rate is adjusted, as needed to maintain the desired liquid levels in the two tanks.

As sluicing operations proceed, most of the solids transferred into the Tank 241-AY-102 are anticipated to settle out, adding to the solids heel. Uniformity of the distributed slurry layer in Tank 241-AY-102 will be verified by monitoring the thermocouple readings. The finer solids may remain suspended in the bulk solution long enough to be recirculated back to Tank 241-C-106 in the sluice stream.

Once the tank conditions have been established to start sluicing operations, the WRSS pumps will be operated to adjust the liquid level in Tank 241-C-106. During sluicing operations, the operator will maintain the resulting liquid level in Tank 241-AY-102, taking into account the effect of the volumes required to fill the transfer lines. The sluice pumps will be started first, and to prevent the possibility that the low-level alarm on the slurry booster pump may be activated by loss of the liquid volume required to fill the slurry transfer line, the slurry pumps will not be started until sluicer flow is verified in Tank 241-C-106. The 241-C Tank Farm operator will set the slurry pump flow rate to a representative value that will ensure no solids settling occurs in the slurry transfer line. The minimum allowed flow rate is 946 L/min (250 gal/min). The nominal flow rate will, however, be 1325 L/min (350 gal/min). The AY-Farm operator strives to maintain the resulting supernate level in Tank 241-AY-102 by controlling the sluice pump speed.

2.5.2.3.2 Routine Sluicing. During the run-hold cycle, the pumps are allowed to run for a period defined by both mass transfer and time limits, which will be provided by Process Engineering. The sluice batch time limit is determined from the uncertainties in the waste characterization and the measurement accuracy of the coriolis mass flowmeter. The interpretation of the time limit is that solid particles could be transferred at a rate equal to 30.48 cm (1 ft) of Tank 241-C-106 sludge over the defined time period, even if the mass flow meter indicated no solids were being transferred. Any indication of particulate solids transfer then reduces the remaining allowed amount of pump run time proportional to the ratio of the measured particulate solids transfer to the particulate solids transfer limit.

At the end of the sluicing batch, the hold period begins to allow data collection and analysis. One primary goal of the hold period is to obtain verification of the mass of solids transferred to Tank 241-AY-102. Three days are allowed to pass so that a clean interface can be established between the settling solids and the supernate in Tank 241-AY-102. The three-day period is chosen to ensure that a clean sludge/supernate interface has formed in Tank 241-AY-102. The ENRAF densitometer in Tank 241-AY-102 is used to obtain two key pieces of information: the density of the clarified supernate and the level of the settled solids (sludge)/supernate interface. If a settled solids bed with sufficient mechanical strength or density to support the ENRAF displacer has not formed, the density of the settling slurry can be measured, and this information can also be used to help estimate the mass of sludge transferred. Thereafter, the depth of the interface, or the density of the settling slurry, can be measured at a desired frequency to see if the waste solids continue to settle. The frequency will have to balance the need for information with the concern of excavating a depression in the solids bed, thus compromising the accuracy of the interface measurement (HNF-SD-WM-RPT-293, *Repository of Not Readily Available Documents for Project W-320*).

During sluicing operations, the sluicer can be controlled either semi-automatically or manually to reduce the solids level throughout the tank as evenly as possible, except for a 1.52 m (5 ft) wide ring of solids against the tank wall. The retrieval activities are accomplished in a series of 0.3 m (1 ft) waste increments. The first two retrieval increments will be

accomplished while maintaining a constant liquid level over the Tank 241-C-106 sludge to minimize the potential for a steam release event that might occur because of any abrupt reductions in hydrostatic pressure on the hotter waste deep in the sludge. The sluicer is used to wash the solids toward the slurry pump suction.

After completion of the first sluicing campaign, when the initial two feet of sludge are removed and the hold periods are satisfied, the volume of supernate in Tank 241-C-106 is minimized for tank leakage considerations and to maximize sluicing efficiency. This is controlled by using submersible slurry pump position indication and the integral level detectors on the pump. The in-tank imaging system may also be used to monitor liquid volume present in the tank. Operation of the sluicer is based on nozzle position information obtained from the sluicer drive position indication system. If fogging does not restrict viewing, the in-tank imaging system is used to help control the sluicer, thereby enhancing sluicing efficiency. During sluicing shutdown periods after the initial two feet of solids removal, the in-tank imaging system is used to identify zones of solids that need to be sluiced.

The duration of the sluicing batch will be limited to provide assurance that excess solids are not unintentionally transferred to Tank 241-AY-102. In addition, measurements on tank temperatures and liquid levels are obtained to determine the amount of sludge transferred. Process control information needs are addressed in the process control plan.

In the event that a solids level reduction assessment can not be accomplished using the in-tank CCTV system in a real-time mode, more frequent (potentially once a shift) temporary shutdowns may be used to allow defogging of the tank to support visual progress assessments.

If pieces of solids (broken-up crust or hard pan materials) too large to pass through the slurry pump inlet screen accumulate at the slurry pump inlet partially or completely plugging the inlet screen, the slurry pump can be temporarily shut down, and the chunks can be sluiced away from the pump intake by directing the sluice stream to agitate this area. In addition, line drainage through the submersible slurry pump will also tend to flush material away from the inlet screen.

2.5.2.3.3 Sluicing Shutdown. For controlled sluicing shutdown operations, the shutdown will be controlled to produce the desired liquid level in Tank 241-C-106. In addition, the pump height or sluicer aiming will be adjusted to reduce the solids loading in the slurry line when the pump is shut down.

To shut down the WRSS, it is desired to minimize the slurry concentration in the slurry transfer line, thus minimizing the amount of solids that may settle out in the line. The sluicer and slurry booster pump will be positioned to control the slurry concentration so that when the transfer lines drain following WRSS shutdowns, only a minimal amount of solids will have settled in the pipe. Water flushing is needed only if the shutdown is known to be of significant duration, such as at the completion of the transfer of a 30.48 cm (1-ft) sluicing increment. Water flushing will not normally be required following shutdown of the system at the completion of a sluicing

batch, because a water flushing operation would take longer than a verification of the mass of sludge transferred during that batch. In this case, the small amount of sludge that settles out in the pipes should be resuspended when the system starts back up because the shutdown duration is not long enough for the settled solids to dry out or cause a significant flammable gas concentration to build up in the pipe.

Flushing water is tapped into the slurry and supernate transfer lines via jumpers in pit 241-AY-02A at Tank 241-AY-102. After flushing, the water remaining in the transfer lines drains back through the lines to 241-C-106 by gravity.

2.5.2.3.4 Tank 241-C-106 Sluicing Completion Evaluation and Post-Sluicing Operations. Determination of the end point for the sluicing operation would depend on performance of a thermal analysis to verify the amount of heat generating material remaining in Tank 241-C-106. An evaluation of whether enough heat generating material has been removed from Tank 241-C-106 is performed in either of the following cases.

CASE 1: The maximum feasible waste recovery has been achieved.

CASE 2: Sluicing operations are stopped for an extended period after the material balance procedure indicates that an adequate volume of heat-generating solids have been removed from the tank to allow it to be stabilized (i.e., less than 18,900 L [5000 gal] supernate and less than 189,000 L [50,000 gal] interstitial liquid).

The evaluation involves maintaining the remaining waste in a wet condition while monitoring the in-tank temperature trends. The temperature data thus generated would then be used to develop an estimate of the remaining heat load in the tank.

This project is designed to lower the heat output of the remaining waste to less than 11.7 kW (40,000 Btu/h), and if required to meet temperature limits to remove as much waste as possible beyond that to demonstrate a waste retrieval technology. The volume of waste removed from the tank may have to be limited for either thermal or flammable gas considerations applicable to the receiving tank. At the end of sluicing operations, however, a 0.3 to 0.6 m (1 to 2 ft) layer of hardened waste may remain. This hardened layer, if not removed during the sluicing operation, would be removed by a different technology which is under development as part of a separate project. In the interim, between the conclusion of the proposed action and the initiation of this future retrieval action, the hardened layer would be monitored and treated (removing any potential excess heat by using air chillers and sprinkler systems), if necessary depending on the heat load, to prevent overheating the tank or keep the waste from drying out.

2.5.2.3.5 Tank AY-102 Supernate Removal Contingency Plan. If implemented, the supernate removal contingency pumping plan uses the existing Tank 241-AY-102 sluice pump system and Tank 241-C-106 slurry pump system in combination to transfer excess Tank 241-AY-102 supernate first into Tank 241-C-106 and subsequently on to the selected receiver tank. Tanks 241-AP-104, 241-AP-106 or 241-AP-107 have been identified as candidate

receivers. A jumper connecting the U11 nozzle (SL100) slurry line to the U3 (SL-503) transfer line in the 02A pit will be available for installation, if required, to support this contingency transfer plan (LA-UR-97-1330).

2.5.2.3.6 Tank 241-C-106 Tank Leak Contingency Plan. In the event of a leak (confirmed through verification of material balance calculations) in Tank 241-C-106 at or above the minimum detectable level of 30,000 L (8000 gal), the following actions would be taken to place the tank in the safest possible condition while follow-on actions are determined in consultation with the U.S. Department of Energy, Richland Operations Office (DOE-RL) and Ecology.

- Stop sluicing retrieval, pending consultation with DOE-RL and Ecology.
- Minimize liquid level within liquid level limitations.
- Maintain evaporative cooling by wetting the waste surface, pending a thermal determination of the need to continue this practice.
- Determine if leak has stopped (by liquid level monitoring).

If the leak has stopped, estimate the amount of leakage from the tank, evaluate consequences of the leaked volume, make appropriate reports, consult with DOE-RL and Ecology to make recommendations to continue the retrieval, and maintain the liquid level below that of the leak site if possible.

If the leak has not stopped, perform periodic wetting of the sludge using the sluicer or other means deemed as appropriate (maintaining minimum liquid inventory in Tank 241-C-106 to keep the sludge wet), evaluate consequences of the leaked volume, make appropriate reports, and perform a thermal analysis to support a decision to continue or stop sluicing retrieval in consultation with DOE-RL and Ecology. It is desirable from an overall risk perspective to remove as much material as possible from Tank 241-C-106 to maintain the post-sluicing temperatures below saturation. Depending on the temperature conditions in the tank, the 296-P-16 exhauster and inlet chiller (subcooling system) may also be reactivated.

2.5.2.3.7 Transfer Line Unplugging Contingency Plan. In the unlikely event that the design features and operating process controls do not prevent a line plug, the following graded approach will be used until the plug is relieved. Design features which minimize the potential for plugging have been incorporated and include 1) a robust pumping system able to maintain turbulent flow, 2) use of long-radius elbows in the buried transfer lines, 3) a transfer line flushing system, and 4) free draining process piping.

1. At the Tank 241-AY-102 end the cover block plug over the flush connection nozzle will be removed and the flush adapter installed. Pressurized hot water (within the lines, allowable pressure is 2206 kPa [320 psig]) is used to remove the plug.

2. If Step 1 is unsuccessful, the Tank 241-C-106 end pit is opened and the associated jumper is removed. A pressure test jumper is connected to the

plugged transfer line and pressurized hot water (transfer line pressure limit: 2206 kPa [320 psig]) is used to remove the plug. Operational experience with the cross site transfer line has shown this method to be effective in plug removal.

3. If Step 2 is unsuccessful, a commercially available hydrolase system is employed to remove the plug. The hydrolase systems are special, moderate- to high-pressure spray heads attached to a flexible hose. These systems are inserted into the pipeline until the spray head is in contact with the plug material. Water is then forced through the spray head to dislodge and flush the plug solids from the transfer line. Because of the free-draining nature of the hydrolasing process, hydrostatic pressure is built up to the allowable pressure of 2206 kPa (320 psig). The transfer line plugging experience at Hanford has been that plugging develops over time and adequate time is available to take corrective measures to stop the buildup of solids before the line completely plugs.

4. In the event Steps 1 through 3 fail to unplug the line and the line must be replaced, ALARA considerations are assessed. The obstruction is located by performing a gamma assay of the pipeline, and confinement barriers are placed around the area. ALARA and waste containment considerations are assessed again before excavating the berm, cutting and removing the pipeline, and replacing and welding the new pipe section.

To maintain a conservative design basis the project has incorporated features to provide a robust pumping system, monitoring capabilities, and operating plans that can be used to ensure that any solids buildup potentially leading to the plugging of either the slurry or sluice transfer lines is detected in time to allow for corrective action such as process solution flushing. These features are discussed in the following paragraphs.

Transfer Pumps. The first such feature provided by the project is a robust transfer pump having the capability to transfer up to 50 wt% solids and maintain turbulent/transition flow (which minimizes solids settling.

Monitoring Instrumentation. The second plugging-prevention design feature is instrumentation to monitor the pump discharge pressure, flow rate, mass transfer rate, and speed setting (the tandem pump system booster pump has a variable speed drive to support flexibility in responding to varying sluicing operating conditions).

The past slurry transfer operations have shown that the combination of pump discharge pressure and flow rate are the best indicators of impending plugging problems. Monitoring these two parameters during sluicing operations is the primary means of detecting changes that indicate a solids plug is beginning to develop. If these two parameters indicate a solids plug is beginning to develop, proactive corrective actions (such as flushing or increased pump flow rates) may be initiated.

Operating Procedures. The third plugging prevention element consists of the operating procedures for the Tank 241-C-106 tandem slurry pump system which avoid excessive solids loading in the slurry pipeline. This element is

not considered necessary for the Tank 241-AY-102 sluice pump because of the lower solids loading in the sluicing stream. During the startup of the Tank 241-C-106 slurry pump, the following three steps are used to ensure excessive solids are not pumped into the slurry transfer line.

1. The submersible pump is raised so that it pumps from the upper layer of liquid in the tank.

2. The sluice stream entering the tank from Tank 241-AY-102 is directed to stir the area around the submersible pump's intake, thereby diluting the solids entering the pump's intake and ensuring that a high (above 30%) solids level solution is not present at the pump intake.

3. When the tandem pumping system is started or the running submersible pump is lowered (after the first sluicing campaign) to improve solids recovery, the pump discharge pressure and flow rate is continuously monitored until steady conditions have been established. Monitoring is continued periodically after this point throughout the WRSS operation.

Transfer Line Flushing. Process supernate flushing of the slurry line is used on a routine basis to prevent the buildup of solids in the slurry line. In addition, should process monitoring identify the beginning of a solids-buildup problem, one of the two following flushing operations would be undertaken to correct the problem.

Routine Process Solution Flushing. During sluicing operations, whenever a slurry pump shutdown is planned, the submersible slurry pump is raised and the sluicer is aimed to minimize the solids entering the pump intake. Approximately 1325 L/min (350 gal/min) of relatively solids free supernate will then be used to flush out the slurry transfer line. After at least one and a half line volumes of relatively solids-free solution have been transferred, the pumps are shut down.

If the transfer pump shuts down unexpectedly, disallowing the use of process solution flushing, the system is flushed by this same process as soon as the pump can be restarted, generally within the next one to eight hours.

Water Flushing. This flushing option would be used when process data indicate the need for flushing and the routine process solution flush is not possible. It would also be used when jumper change operations are planned and it is necessary to decontaminate the process jumpers to the maximum extent practicable for ALARA reasons.

Both the sluice and slurry transfer lines can be water-flushed from the Tank 241-AY-102 end using flush connections in the sluicing system jumpers located in the 02A (slurry distributor) pit and 02E (sluice pump) pit. A cover block shielding plug is removed from the AY pit cover block using a crane. This allows access to the flushing port blank. The blank is removed and a flushing adapter jumper is attached in its place. Water from a tank

truck is then pumped through the transfer line to achieve the required flush. This nonroutine flushing operation can generally be accomplished within one to two weeks of the identification of the need.

2.5.2.3.8 Tank 241-AY-102 Void Fraction Monitoring Contingency Plan. LA-UR-97-1330 identifies the need for a contingency plan to add void fraction monitoring to Tank 241-AY-102 within two weeks of the identification of the flammable gas buildup that would warrant this monitoring enhancement.

2.5.3 Supporting Operations

2.5.3.1 Sampling. Liquid grab sampling is planned during sluicing operations to provide necessary process control characterization data. This sampling will generally be accomplished through an existing above grade riser at Tank 241-AY-102 using existing sampling procedures.

After every batch sluicing transfer, a liquid grab sample will be taken from Tank 241-AY-102. The following items will be analyzed and reported: bulk density, gravity settled solids density, liquid density, gravity settled solids volume percent, plutonium, hydroxide, nitrates, and nitrites. Thermo-gravimetric analysis, inductively coupled plasma analysis, and radioisotope analysis for Sr-90 and CS-137 results may also be performed. (It should be noted that C-106 solids dissolution by dilute Tank 241-AY-102 supernate may affect the source term. The samples that will be collected and assessed will indicate any such effects. This should have no impact on accident consequences, because a ratio of 33% solids and 67% liquids is used in the spray leak accident analysis.)

Additional sampling requirements may be specified by East Tank Farms Engineering, Environmental Permit/Policy, and Process Engineering.

2.5.3.2 Chemical Additions. The addition of nitrates and/or nitrites maintains tank corrosion specifications. This can be accomplished via additions from a tank truck to either tank or by routing the chemicals into Tank 241-AY-102 through waste transfer lines from the 204-AR Waste Unloading Facility. The supernate in Tank 241-AY-102 will be adjusted to meet double shell tank corrosion specifications before starting sluicing operations (HNF-SD-WM-TI-756).

2.5.3.3 Maintenance and Replacement of Long Length Equipment. The WRSS has been designed and arranged for efficient, cost-effective operation and maintenance, with personnel radiation exposure meeting ALARA principles. Remote maintenance capabilities are provided where required and justified. System designs provide for the safety of maintenance personnel.

2.5.4 Past Practice Sluicing Lessons Learned

Because sluicing was conducted in two distinct phases at separate times in Hanford's history, this discussion of lessons learned is broken down into

1950's and 1970's sections. Lessons learned in the 1950's were incorporated in sluicing operations in the 1970's. The lessons learned during the 1970's have been addressed by design features added to the WRSS.

WHC-SD-WM-TI-302, *Hanford Waste Tank Sluicing History*, discusses the past practice sluicing operations conducted in the 1950's and 1970's. It is the source document for the following summary of lessons learned.

2.5.4.1 1950's Past Practice Sluicing Lessons Learned. As discussed in WHC-SD-WM-TI-302, the problem areas encountered during the 1950's phase of past practice sluicing fell in three areas: 1) multiple pump failures, 2) multiple sluicer hose failures, and 3) a plugged transfer line. Each of these is discussed below.

2.5.4.1.1 Pump Failures. Failures of Nagel sludge pumps occurred frequently during the 1950's campaigns, including C Farm sluicing operations. Fifteen Nagel sludge pumps failed during the sluicing of Tanks 241-C-101 through 241-C-106. Twelve of these failures, however, occurred during the sluicing of the first tank, 241-C-101, indicating that a significant learning curve was achieved on the subsequent sluicing operations.

No specifics were provided on the cause of these pump failures in WHC-SD-WM-TI-302. However, possible causes include the inadequacy of the basic cantilevered pump design employed by the Nagel pumps for slurry service, and operations of the pumps at a too low net positive suction head, potentially causing cavitation and short pump life. Operation of the pumps at low submergence levels would have been used to maximize the sludge recovery.

The fact that the sludge pump design was changed for 1970's sluicing operations and a lack of similar problems during those operations infers that the problem was corrected, though a specific reference is not available. The 1970's slurry pumps were either straight-stick centrifugal or vertical-turbine pumps incorporating long drive shafts between the pump motor located in the process pits on top of the tanks and the impellers located down in the waste in the tanks. The drive shafts were supported by multiple intermediate bearings. This design approach provided a much more robust slurry pump, but did complicate the task of adjusting the height of the pumps. The Nagel pumps had been suspended inside the tank vapor space from chains or flat cables which allowed the height of the intake to be adjusted remotely.

The WRSS slurry and sluice pump systems were specified to ensure a robust design that would withstand the rigors of challenging slurry service conditions. The pump specification, HWS-9090, for the most successful of the 1970's slurry pumps, the P-200 Barrett, Haentjens & Co. slurry pump, was used as a starting point for the project WRSS slurry and sluice pump specification. Most of the applicable design requirements of the 1970's sluice and slurry pumps have been retained for the new sluice/slurry pump systems.
A submersible pump was specified to allow use of the remote height adjustment feature used in the 1950's. The new pump systems are more complex than either the 1950's or 1970's systems because of the need for a higher pump pressure caused by the longer transfer routes, necessitating the need for a booster pump in each system.

2.5.4.1.2 Sluicer Failures. A single sluicer hose failure was reported during the 1950's C Farm sluicing operations. A number of similar failures were also reported for sluicing in other farms during the 1950's. WHC-SD-WM-TI-302 indicates that this was corrected by installing a hose rated for a higher operating pressure.

2.5.4.1.3 Line Plugging. Transfer line plugging has been identified as a potential operational concern. Slurry pumping experience over the years at the Hanford Site indicates that a transfer line plug during sluicing operations is very unlikely. This experience includes the sluicing of 53 SSTs using past practice sluicing technology. Only a single line-plugging event was recorded during these operations, and the line involved was a sluice line, not the higher-solids slurry line.

However, to provide a robust sluicing system, design features have been incorporated into the WRSS to minimize the potential for line plugging and to allow for flushing of both the transfer lines. Design features which minimize the potential for plugging include 1) a robust pumping system able to maintain turbulent flow, 2) use of long-radius elbows in the buried transfer lines, 3) a transfer line flushing system, and 4) free draining process piping.

2.5.4.2 1970's Past Practice Sluicing Lessons Learned. WHC-SD-WM-TI-302 also discusses the sluicing operations conducted in the late 1960's and 1970's (referred to here collectively as 1970's sluicing). The problem areas encountered during these sluicing operations included: (1) sluicer hose failures, (2) extended sluicing status evaluation times, and (3) slurry pump height adjustment delays. Each of these problem areas is discussed below.

2.5.4.2.1 Sluicer Hose Failures. Sluicer hose failures were again encountered during the early parts of the 1970's sluicing operations. One or more alternative hoses were tested in operations and the final selection, Gates 18MB air drill (wire braid) hose, proved satisfactory in overcoming these problems. The new sluicer is an improved stainless steel version of the 1970's sluicers. It also uses a high-pressure rated hose 5515.81 kPa (800 psi).

The hose selected for use in the WRSS is the Gates Food Master (Specification 3132C). This hose is made of radiation-tolerant materials capable of handling radiation doses far above those anticipated during the operational life of the WRSS. The working pressure rating for this hose is well above the sluicing system operating pressure and its bend radius characteristics are superior to those of the Gates 18MB hose used in the successful 1970's sluicers.

2.5.4.2.2 Extended Sluicing Status Evaluation Time. Evaluation of the progress and completion status of sluicing operations took much too long to effectively support the operations of processing programs that depended on the sluicing program for feed stock (i.e., B Plant Strontium recovery operations).

The evaluation of sluicing progress status was accomplished by pumping the sluice tank to minimum liquid level and assuming the liquid level rise in

the receiver tank was the result of transferred solids. This technique provided no information useful in determining where next to direct the sluice stream in the tank.

Two additional techniques were available to process engineering to help provide information to direct subsequent sluicing operations. The first was gamma monitoring instrumentation installed on the slurry transfer line. Higher gamma reading from this instrumentation was used to indicate that sludge recovery was occurring. This technique had two drawbacks. The first and most obvious was that it provided only after-the-fact information, i.e., it couldn't be used to determine in advance where to sluice to achieve effective solids recovery. The second drawback was that no correlation between the radiation reading and the actual volumes of sludge being recovered existed.

The second and most informative of the sluicing progress assessment techniques was in-tank photographs. Use of this technique was, however, minimized because of its impact on the sluicing schedule and increased cost.

The process of taking photographs in the tank began by increasing the air flow through the tank by opening a riser on the tank to be photographed. This was necessary to remove fog and sluicing-generated vapors that would have otherwise obscured details in any photos taken inside the tank. The duration of the venting of the tank varied greatly depending on the time of year. In hot or warm weather, fog could be cleared in a day or two. In cold weather, as much as a week or more was required.

The photographs were then taken and developed overnight. The resulting group of 24 photographs was then hand assembled into a mosaic of the tank's interior to support interpretation of the sluicing progress status. This normally took approximately one half day.

The overall process, therefore, took between three days and a week and a half. This duration was frequently affected by unacceptably hazy photographic results, i.e., it was sometimes difficult to determine by looking down a tank riser if the tank had adequately defogged.

Because some of these sluicing operations supported and were closely coupled to the much more costly strontium recovery operations at B Plant, the duration uncertainties associated with these progress evaluations received a great deal of management attention and were considered an area in which the sluicing program needed to improve its performance. The CCTV system is designed to operate successfully in the misty, dirty tank vapor environment anticipated to be present in Tank 241-C-106 during sluicing operations. It includes provision for gas purging of the CCTV viewing lens and water flushing of both the viewing and light element lenses. The water-flushing feature was added to the system based on the results of one-quarter scale simulant testing conducted for project WRSS by the Pacific Northwest National Laboratory. The Tank 241-C-106 HVAC system also includes a provision to support in-tank viewing CCTV system. This feature is an air-recirculation loop heater designed to reheat the air being returned to the tank to avoid fogging that would obscure the tank interior.

The addition of the in-tank imaging capability to Tank 241-C-106 by the WRSS is intended to resolve this shortcoming in past practice sluicing. The design also resolved the pump height adjustment delays experienced in the 1970's sluicing program by allowing remote pump intake level height adjustments. The adjustable height design draws heavily from the successful 1950's sluicing adjustable height pump design.

2.5.4.2.3 Slurry Pump Height Adjustment Delays. The use of straight-stick pumps rather than adjustable-length pumps resulted in the need to occasionally adjust the height of the pump intake. To accomplish this adjustment, sluicing had to be stopped, thereby affecting the duration of sluicing operations.

During the initial installation of the slurry pumps, the pumps were backflushed into the waste solids in the tank until the downward movement of the pumps stopped. This usually occurred before the pump mounting flange had mated with the associated riser flange. The distance between the flanges was measured and a two-part spool piece, slightly taller than this measurement, was fabricated on a priority basis. The pump was then raised with a crane, the halves of the spool piece were slipped into place, the pump was set on the spool, and the pump discharge jumper installed. This process required a minimum of two days and up to a week or more depending on the wind conditions present (open pit operations could not be conducted with wind speeds above 12 mph at that time). Because the wind was the major contributor to the duration uncertainty, the duration could not be accurately predicted in advance.

Because some of these sluicing operations supported and were close-coupled to the much more costly strontium recovery operations at B Plant, the duration uncertainties associated with pump height adjustments received a great deal of attention and were considered a point where the sluicing program needed to improve its performance. The sluice/slurry pump system resolved the pump height adjustment delays experienced in the 1970's sluicing program by allowing remote pump intake level height adjustments. The adjustable height design draws heavily from the successful 1950's sluicing adjustable height pump design.

2.5.5 Chemical Compatibility

In addition to completing the compatibility evaluations required by TWRS operating procedures, additional laboratory work was performed. In the experimental procedure described in HNF-SD-WM-TI-756, a sample of Tank 241-AY-102 supernate was mixed with a sample of Tank 241-C-106 sludge. No unusual behaviors were noted; and most importantly no exotherm was noted for the combined solution, indicating that the energetics of the mixture are not reactive. This result is consistent with the expectations based on the chemical composition of the sludge in Tank 241-C-106 and the supernate in Tank 241-AY-102. The major chemical species in the solid phase of the Tank 241-C-106 sludge are sodium aluminum silicates, iron hydroxide, sodium bicarbonate and carbonate, sodium oxalate and aluminum hydroxide (HNF-SD-WM-TI-756, Table 8-1). Of these species, only the sodium bicarbonate/carbonate is anticipated to dissolve in the Tank 241-AY-102

supernate and the dissolution releases a small amount of energy in comparison to the heat capacity of the water present (HNF-SD-WM-TI-756, Appendix A.10). In another experimental procedure described in PNNL-11381, *Washing and Caustic Leaching of Hanford Tank C-106 Sludge*, a sludge sample from Tank 241-C-106 was subjected to washing and caustic leaching. During the washing tests, approximately 25% by weight of the solid was dissolved, while in the more aggressive leaching tests 38% by weight of the solid dissolved. The strontium showed no tendency to dissolve in either test while cesium dissolution ranged from 40 to 60%. The transuranic elements showed no tendency to dissolve in either the 0.01 M NaOH wash or the 3 M NaOH leach. These experiments confirmed the chemical behavior described in the criticality safety evaluation for the project (HNF-SD-W320-CSA-001, *Criticality Safety Assessment for Tank 241-C-106 Remediation*), which concluded that plutonium will remain bound with the neutron absorbers in a predominantly agglomerated form, provided the pH remains alkaline.

2.6 SAFETY SUPPORT SYSTEMS

This section provides detailed descriptions of the relevant Tank 241-C-106 and Tank 241-AY-102 safety support systems and equipment in their respective tank farms. These safety support systems consist of indicators, controls/control systems and interlocks.

2.6.1 Fire Protection Systems

A fire protection system includes detection, alarm, and suppression elements. Most of the hydrants are fed from raw water systems. Portable fire extinguishers are in each of the tank farm control stations located at the edge of each tank farm.

2.6.2 Ventilation Exhaust Radiation Monitoring System

The ventilation exhaust radiation monitoring system consists of a continuous air monitor and a record sampler that provides continuous radiation monitoring of the ventilation exhaust. The ventilation exhaust radiation monitoring systems are able to detect and limit a radioactive aerosol leak, resulting from an unfiltered release of the exhaust gases to the environment, by initiating a shutdown of the exhaust system.

Continuous stack air monitors sample and monitor air for the presence of radionuclides in areas of potential airborne radioactivity. The continuous air monitors are located on the exhaust stacks of the primary and alternate/backup ventilation systems for both Tanks 241-AY-102 and 241-C-106.

2.6.3 WRSS System Interlocks

The interlocks utilized by the WRSS are listed in Tables 2-3 through 2-7.

2.6.4 System Controller and Interlocks

The ventilation system controller provides and performs the following functions:

- Differential pressure indication and alarm for process-related HEPA filtration units
- Tank vacuum monitoring and control system capable of fan speed adjustments and/or ventilation system shutdown upon tank ventilation system failure
- Isokinetic monitoring station at ventilation exhaust stack to monitor radiation emissions
- Emissions monitoring at ventilation exhaust stack to meet the requirements of 40 CFR 61, Subpart H, "National Emission Standards for Emissions of Radionuclides Other than Radon from Department of Energy Facilities."

Interlocks shut down the exhaust fan or prevent its operation when an exhaust high-radiation condition is detected by the ventilation exhaust radiation monitoring system (Table 2-4).

2.7 UTILITY DISTRIBUTION SYSTEMS

Tank 241-AY-102 is supported by buildings, systems, and components located in the AY Tank Farm, and served by utility systems that provide electrical power, process and instrument air, and cooling water.

Tank 241-C-106 is supported by trailers, systems, and components located in the C Tank Farm and served by utility systems that provide electrical power, 241-raw water, compressed air, and sanitary facilities.

2.7.1 Process and Instrument Air

The Tank 241-AY-102 compressed air system supplies instrument air to the primary tank and annulus ventilation systems and to the ALCs, which will not be operated during the retrieval activities. There are 22 independently controlled ALCs installed in Tank 241-AY-102.

2.7.2 Electrical Power

Power from the Hanford Site power grid is provided from existing 13.8 kV pole line C8-L6 (See Section 2.4.2.1 for a more complete discussion).

2.7.3 Water Supply

All water for the 200 East Area is supplied from the Hanford Site export water system and is distributed throughout the area in the raw water system and the sanitary water system. This treated water is supplied from the 200 Area power plants and is transported by tanker truck.

2.7.4 Compressed Air System

The compressed air system installed as part of the Project W-320 WRSS at the 241-C Tank Farm will be used. A dedicated compressed air system is provided (see Section 2.4.2.2 for a more complete discussion).

2.8 AUXILIARY SYSTEMS AND SUPPORT FACILITIES

No systems or facilities other than those described in the previous sections were identified as requiring descriptions in this document.

2.9 REFERENCES

40 CFR 61, Subpart H, "National Emission Standards for Emissions of Radionuclides Other than Radon from Department of Energy Facilities," *Code of Federal Regulations*, as amended.

ANSI/ASME B31.3-1993, 1993, *Chemical Plant and Petroleum Refinery Piping*, American National Standards Institute, American Society of Mechanical Engineers, New York, New York.

ASME, 1992, *Boiler and Pressure Vessel Code*, Section VIII, Div 1., 1994 addenda, American Society of Mechanical Engineers, New York, New York.

DOE 5480.21, 1991, *Unreviewed Safety Questions*, U.S. Department of Energy, Washington, D.C.

DOE 5480.23, 1994, *Nuclear Safety Analysis Reports*, Change 1, U.S. Department of Energy, Washington, D.C.

DOE 6430.1A, 1989, *General Design Criteria*, U.S. Department of Energy, Washington, D.C.

DOE\EA-0933, 1995, *Environmental Assessment, Tank 241-C-106 Past-Practice Sluicing Waste Retrieval, Hanford Site, Richland, Washington*, U.S. Department of Energy, Richland Operations Office, Richland, Washington.

DOE-STD-3009-94, 1994, *Preparation Guide for U.S. Department of Energy Nonreactor Nuclear Facility Safety Analysis Reports*, U.S. Department of Energy, Washington, D.C.

Ecology, EPA, and DOE, 1994, *Hanford Federal Facility Agreement and Consent Order*, as amended, Washington State Department of Ecology, U.S. Environmental Protection Agency, and U.S. Department of Energy, Olympia, Washington.

HNF-EP-0182-120, 1998, *Waste Tank Summary Report for Month Ending March 31, 1998*, Fluor Daniel Hanford, Inc., Richland, Washington.

HNF-SD-W320-CSA-001, 1997, *Criticality Safety Assessment of Tank 241-C-106 Remediation*, Rev. 1, Duke Engineering and Services, Hanford, Richland, Washington.

HNF-SD-W320-ER-002, 1997, *Project W-320 Thermal Evaluation*, Rev. 0, Numatec Hanford, Inc., Richland, Washington.

HNF-SD-W320-ER-004, 1998, *Project W-320 SAR and Process Control Thermal Analysis*, Rev. 1, Numatec Hanford Company, Richland, Washington.

HNF-SD-W320-FDC-001, 1998, *Functional Design Criteria for Tank 241-C-106 Waste Retrieval, Project W-320*, Rev. 5, Numatec Hanford Company, Richland, Washington.

HNF-SD-W320-TI-008, 1997, *Tank 241-C-106 Sluicing Project W-320 Integrity Assessment Report*, Rev. 0, SGN Eurisys Services, Inc., Richland, Washington.

HNF-SD-WM-BIO-001, 1998 *Tank Waste Remediation System Basis for Interim Operation*, Rev. 1, Fluor Daniel Hanford, Inc., Richland, Washington.

HNF-SD-WM-RPT-293, *1997 Repository of Not Readily Available Documents for Project W-320*, Rev. 0, Fluor Daniel Northwest, Inc., Richland, Washington.

HNF-SD-WM-TI-756, 1997, *Chemical and Chemically Related Considerations Associated with Sluicing Tank C-106 Waste to Tank AY-102*, Rev. 2, Lockheed Martin Hanford Corporation, Richland, Washington.

LA-UR-97-1330, 1997, *Discussion of Flammable Gas Issue for Project W-320*, Rev. 0, Los Alamos National Laboratory, Los Alamos, New Mexico.

NAI-940708-3, 1995, *GOTH Tank C-106 Thermal Hydraulics Analysis Related to the 1995 Process Test*, Numerical Applications, Incorporated, Richland, Washington.

Public Law 101-510, 1990, *National Defense Authorization Act for Fiscal Year 1991*, Section 3137, "Safety Measures for Waste Tanks at Hanford Nuclear Reservation."

PNNL-11381, 1996, *Washing and Caustic Leaching of Hanford Tank C-106 Sludge*, Pacific Northwest National Laboratory, Richland, Washington.

PNNL-11627, 1997, *Monitoring Gas Retention and Slurry Transport During the Transfer of Waste from C-106 to AY-102*, Pacific Northwest National Laboratory, Richland, Washington.

Sanders, G. H., 1995, *Project 93L-EWW-320, Tank 241-C-106 Sluicing-Sluicing Fluid Baseline Change to Corrosion Inhibited Water* (letter 95-RTI-065 to President, Westinghouse Hanford Company, July 19), U.S. Department of Energy, Richland Operations Office, Richland, Washington.

TF-95-0105 (Unreviewed Safety Question Evaluation Tracking Number), 1995, *Project W-320, C-106 Sluicing and Waste Retrieval for Storage in AY-102*, Rev. 0, Westinghouse Hanford Company, Richland, Washington.

TR-W-320-126, 1994, *Project W-320, Tank 241-C-106 Sluicing - An Analysis of Energy and Temperature Effects for Tank AY-102*, ICF Kaiser Engineers, Inc., Oakland, California.

W320-27-045, 1997, *Pipe Drain Flow and Anti-Siphon Sizing for Transfer Lines*, Design Analysis Calculation, Fluor Daniel Northwest, Richland, Washington.

W320-H-015, 1995, *Sizing of Moisture Separator*, Design Analysis Calculation, Kaiser Engineers Hanford, Richland, Washington.

WAC 173-480, 1990, "Air Pollution Control Regulations," *Washington Administrative Code*.

WHC-EP-0586, 1992, *Tank Selection Criteria and Retrieval Recommendation for Tri-Party Agreement Milestone M-07*, Rev. 0, Westinghouse Hanford Company, Richland, Washington.

WHC-SD-W320-TI-002, 1995, *Project W-320, Tank 241-C-106 Sluicing Process*, Rev. 0, Westinghouse Hanford Company, Richland, Washington.

WHC-SD-WM-ER-585, 1996, *DST Remaining Useful Life Estimates*, Rev. 0, Westinghouse Hanford Company, Richland, Washington.

WHC-SD-WM-PSE-010, 1994, *Preliminary Safety Evaluation for the 241-C-106 Waste Retrieval, Project W-320*, Rev. 2, Westinghouse Hanford Company, Richland, Washington.

WHC-SD-WM-SEL-033, 1997, *Tank 241-C-106 Sluicing Preliminary Safety Equipment List*, Rev. 2, Westinghouse Hanford Company, Richland, Washington.

WHC-SD-WM-TI-302, 1987, *Hanford Waste Tank Sluicing History*, Rev. 0, Westinghouse Hanford Company, Richland, Washington.

WHC-SP-0697, 1993, *A Plan to Implement Remediation of Waste Tank Safety Issues at the Hanford Site*, Rev. 0, Westinghouse Hanford Company, Richland, Washington.

Figure 2-1. Tank 241-C-106 Waste Retrieval Sluicing System Tank and Transfer Line Arrangement Diagram.

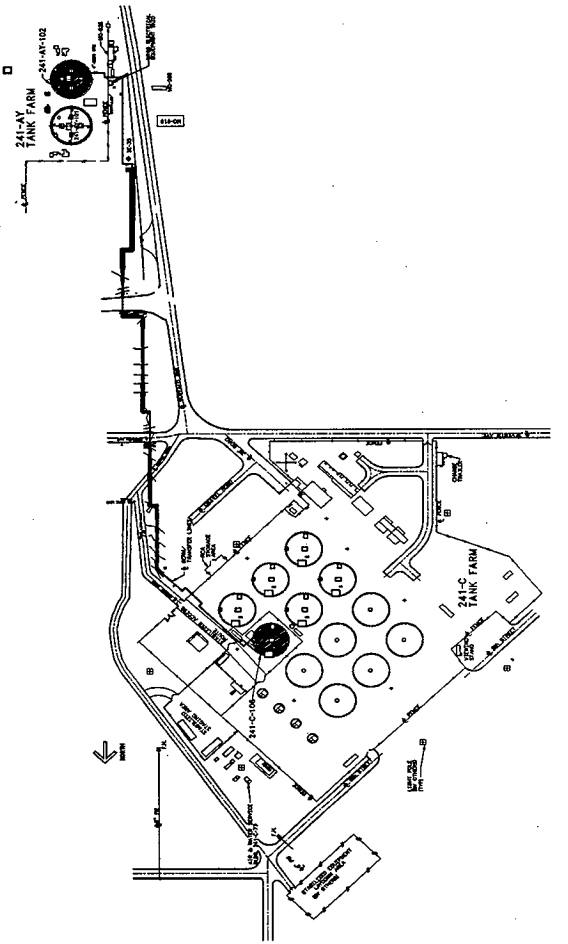

Figure 2-2. Tank 241-C-106 Waste Retrieval Sluicing System Equipment Arrangement.

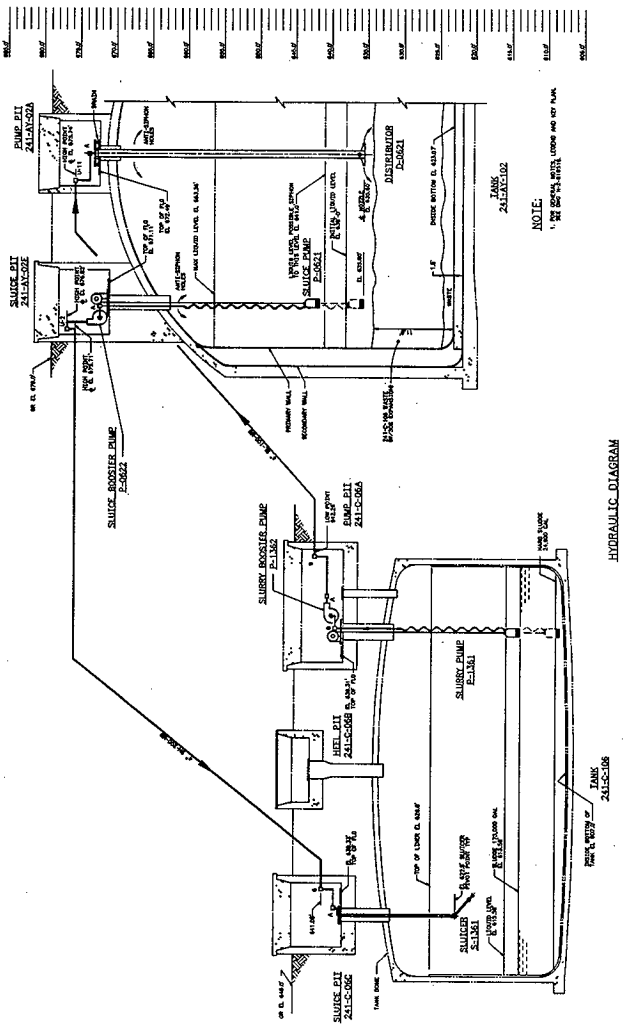

Figure 2-3. Design of Single-shell Tank 241-C-106 (530,000 gal).

Riser	Size
R1	4 in.
R2	12 in.
R3	12 in.
R4	4 in.
R5	4 in.
R6	12 in.
R7	12 in.
R8	4 in.
R9	36 in.
R13	12 in.
R14	4 in.
R15	12 in.

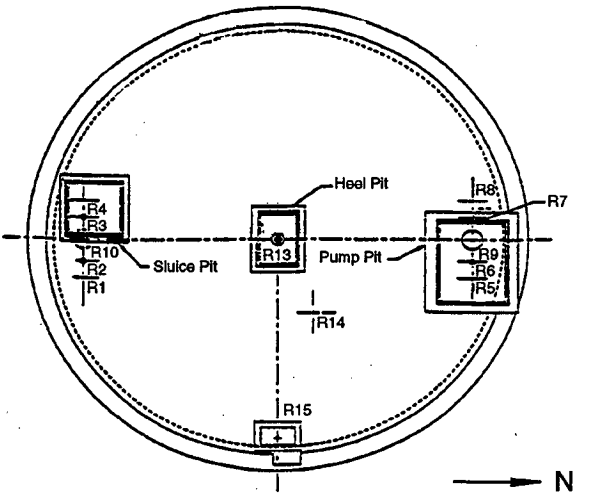

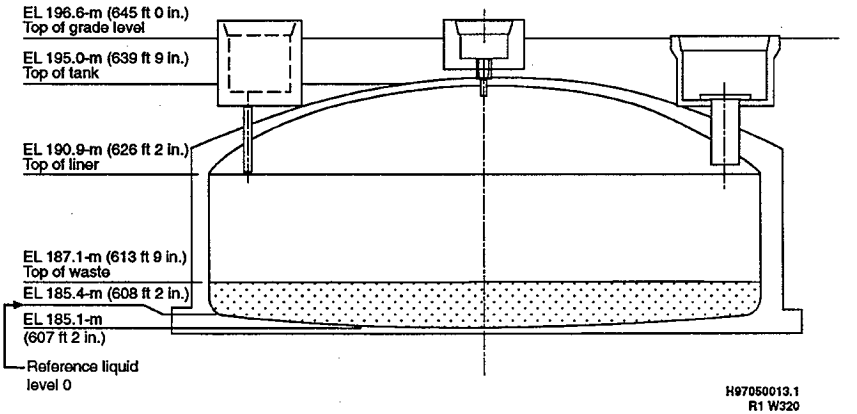

Figure 2-4. Tank 241-C-106 Cross-Sectional View.

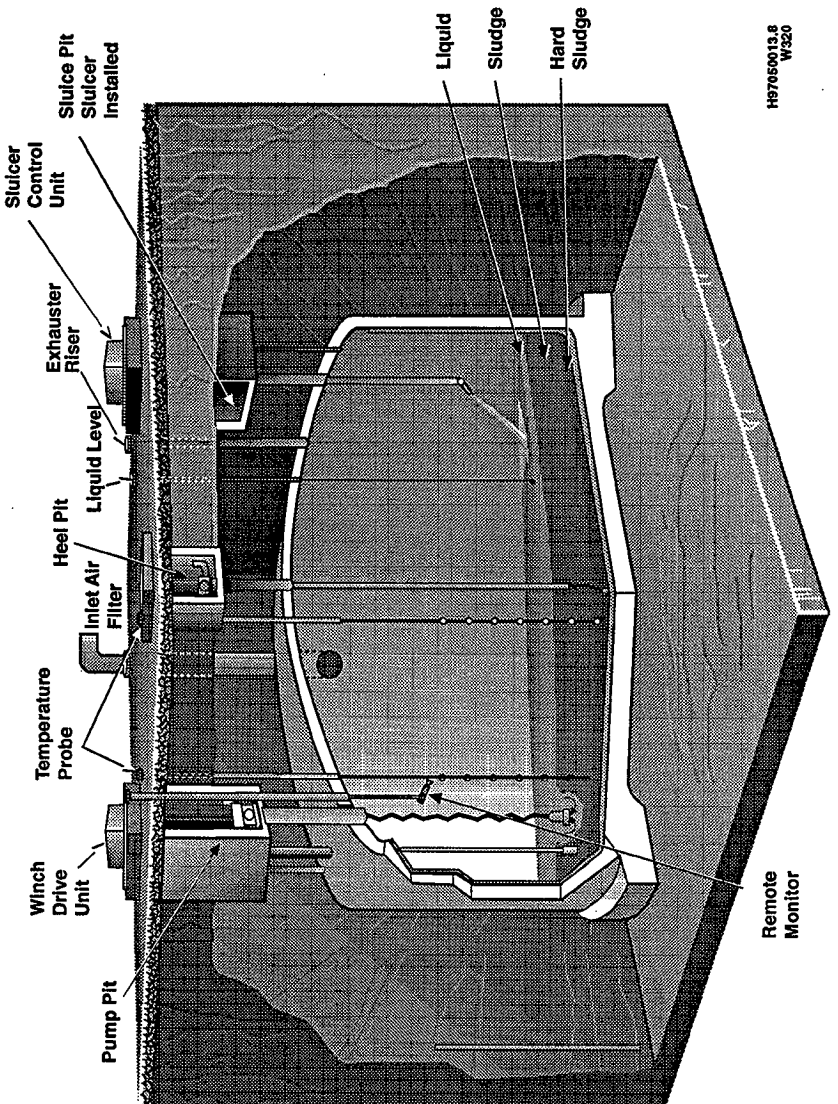

Figure 2-5. Tank 241-C-106 Waste Retrieval Sluicing System Ventilation Flow Diagram.

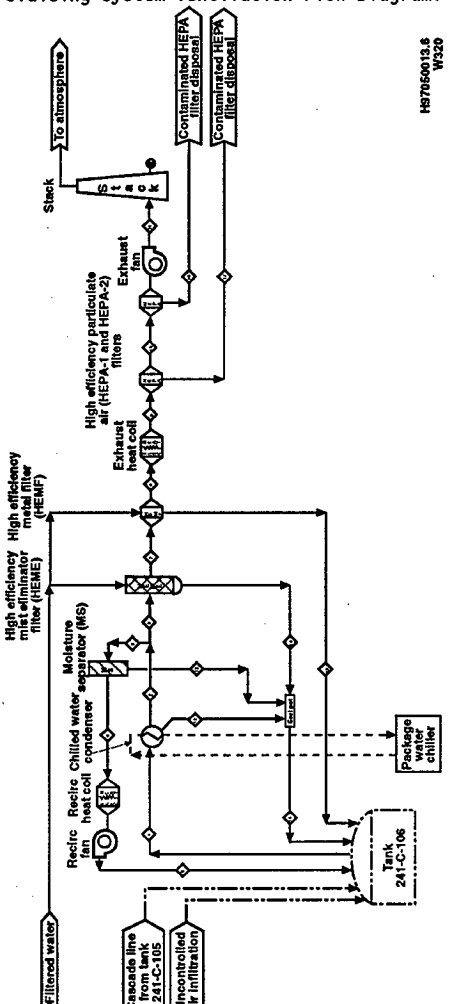

Figure 2-6. Tank 241-AY-102 Cross-Sectional View.

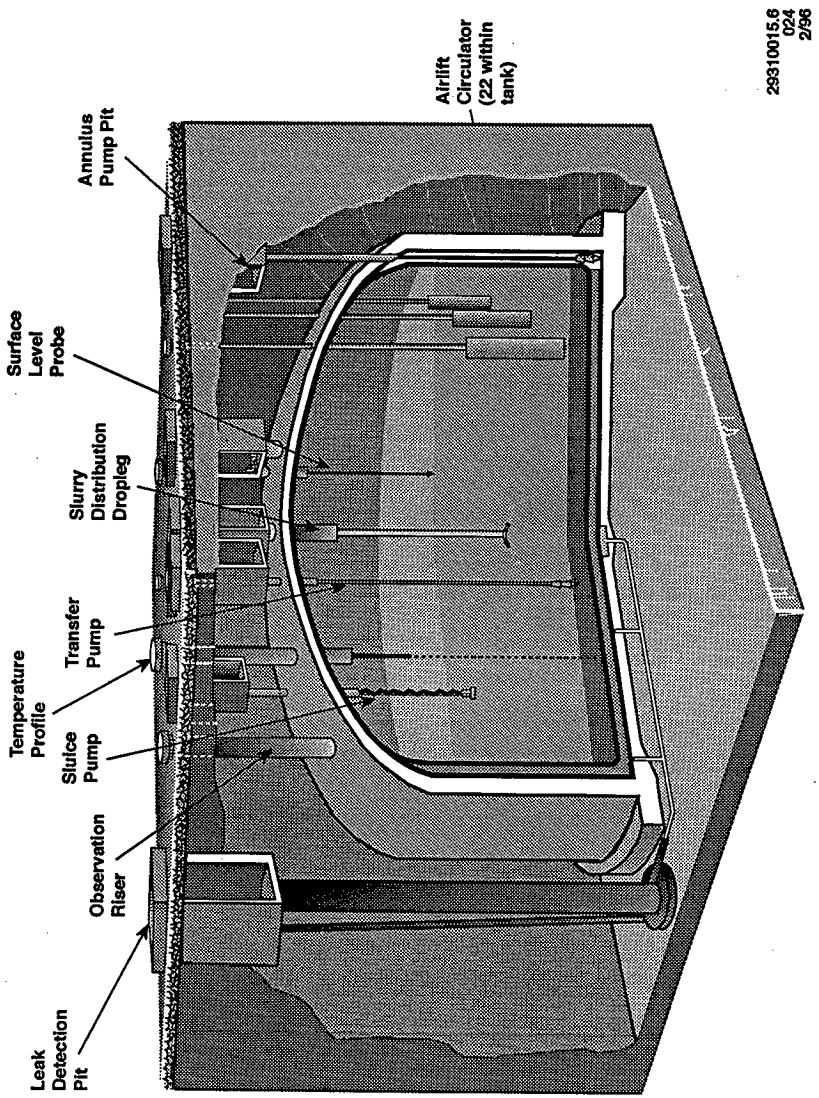

Figure 2-7. Aging Waste Facility Primary and Backup Ventilation System (241-A-702). (Sheet 1 of 2)

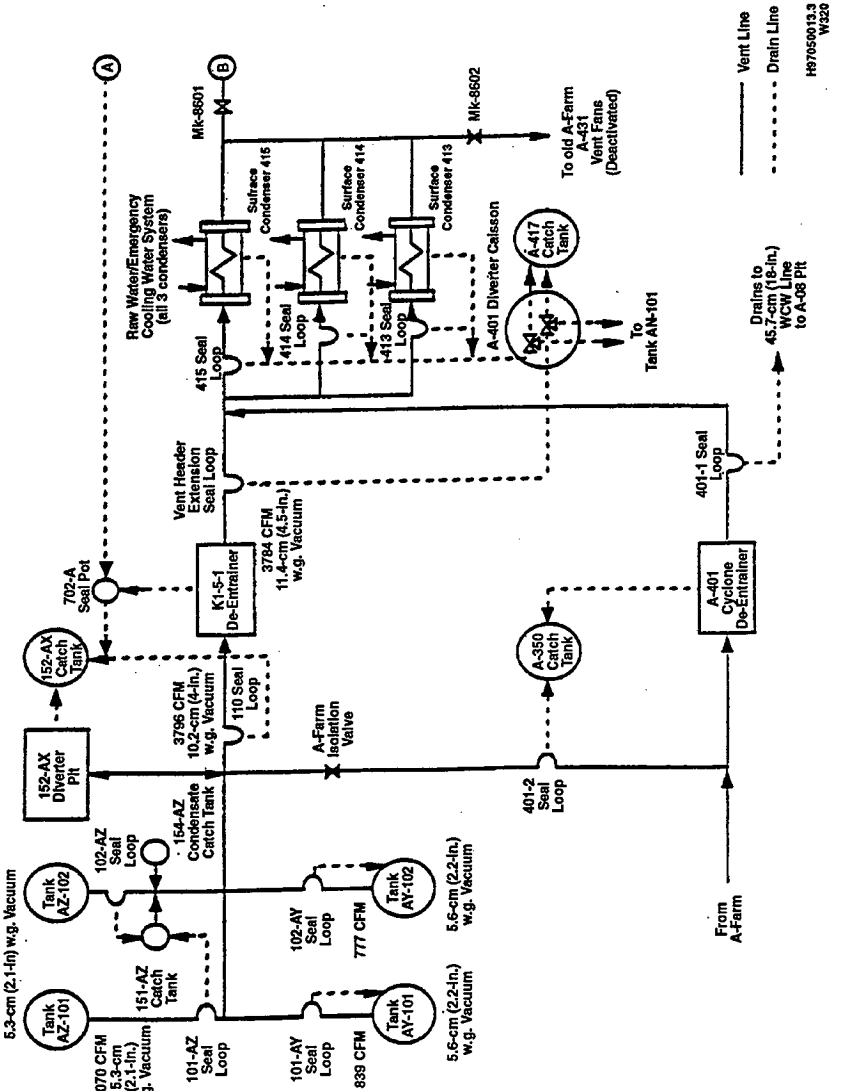

Figure 2-7. Aging Waste Facility Primary and Backup Ventilation System (241-A-702). (Sheet 2 of 2)

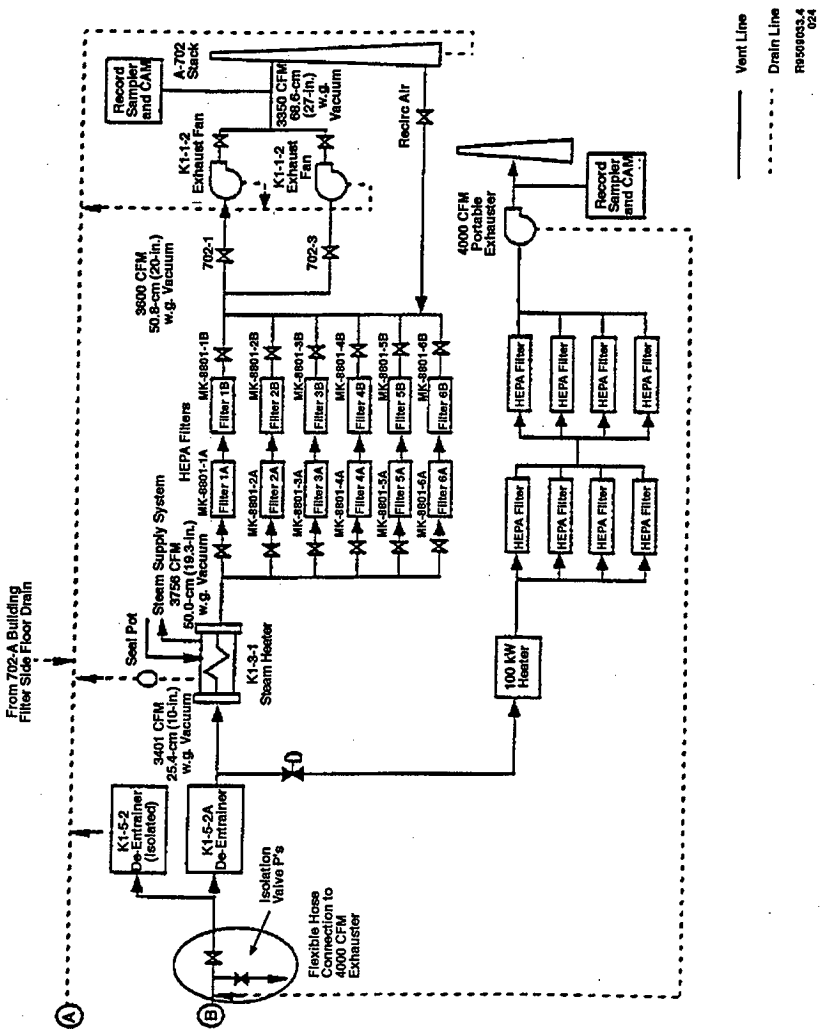

Figure 2-8. Annulus Ventilation System Tank 241-AY-102.

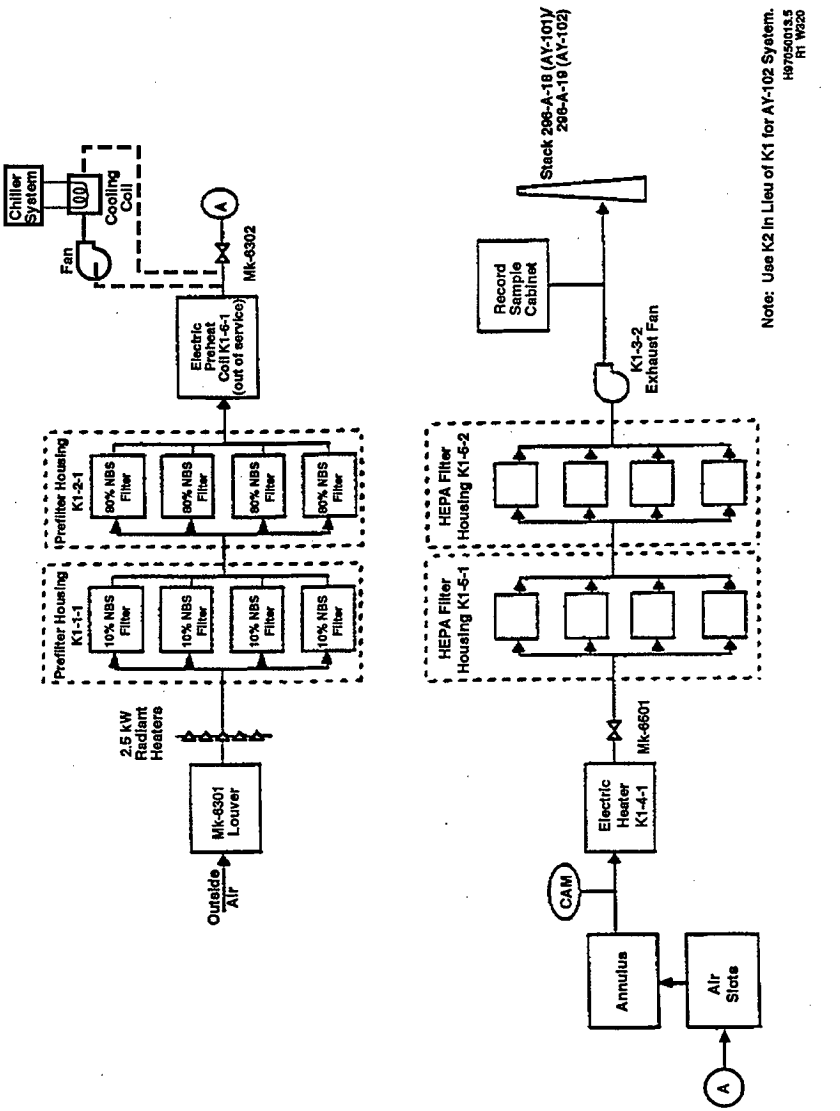

Figure 2-9. 241-AZ-702 Ventilation Upgrade System.

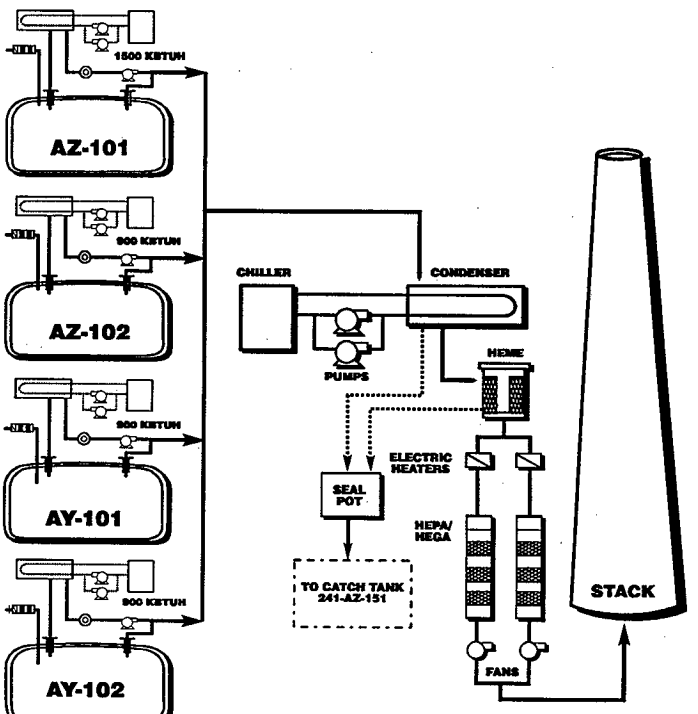

Figure 2-10. Tank 241-C-106 Waste Retrieval Sluicing Sluicer Assembly Arrangement Diagram.

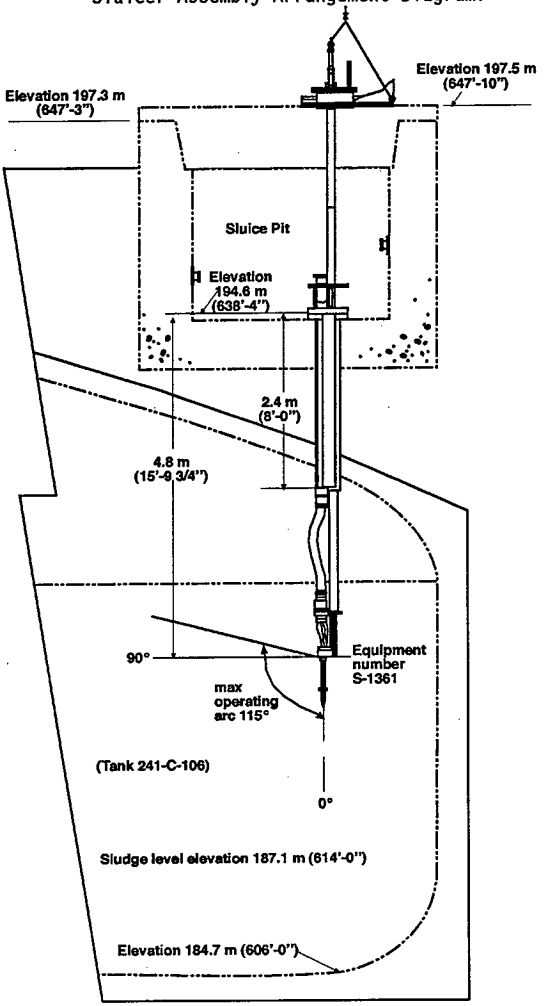

H98060009.95
SRP-BIO

This page intentionally left blank.

Table 2-1. Tank 241-C-106 Existing Instrumentation Signals.

Instrument tag number	Description	Indication and/or alarm (CASS, TMAC)
TE-106-14-1 through TE-106-14-6, and TE-106-14-8	Riser "R-14" temperature sensors	X
TE-106-8-1 through TE-106-8-6	Riser "R-8" temperature sensors	X
WST-LIT-1306	ENRAF level detector	X

X = Indicates application or use.
NOTE: ENRAF is a trademark of the ENRAF Corporation.

Table 2-2. Tank 241-AY-102 Existing Instrumentation Signals.

Instrument tag number	Description	Indication and/or alarm (CASS, TMAC)	Control station alarm
WFT-102-1	Leak detection pit 102A weight factor sensor	X	
TE-102-28	Leak detection pit 102A temperature sensor	X	
RE-102	Leak detector pit 102A radiation sensor	X	
PAS-102-1	AY-102 high pressure (low vacuum) alarm switch	X	X
PAS-102-2	AY-102 low pressure (high vacuum) alarm switch	X	X
TE-102-38 through TE-102-59	R-2 riser temperature sensors	X	
TE-102-60 through TE-102-71	R-13 riser temperature sensors	X	
TE-102-72 through TE-102-74	R-15 riser temperature sensors	X	
LLAS-102-1	241-AY-102 liquid level high alarm switch	X	X
LDS-102-32	Sluice pit 241-AY-02E leak detector switch	X	X
LDS-102-22A	Pump pit 241-AY-02A leak detector switch	X	X
LIT-102-AY	241-AY-102 level transmitter	X	
TE-102-82 through TE-102-93	241-AY-102 dome temperature sensors	X	
TE-102-26 and TE-102-27	241-AY-102 primary tank wall temperature sensors	X	
TE-102-1 through TE-102-25	241-AY-102 primary tank floor temperature sensors	X	
TE-102-29 through TE-102-37	241-AY-102 secondary tank concrete temperature sensors	X	

X = Indicates application or use.
DACS = Digital Alarm Control System.

Table 2-3. C-Farm Ventilation System Interlocks.

Event	Sensing device	Interlock action
High differential pressure across both exhaust HEPA filters, HEP-1361 and HEP-1362	1) PDISH-13620 & KY-13620 (30 second timer)	1) High Differential Pressure (-5 W.C.) Across HEPAs HEP-1361 & HEP-1362 starts timer KY-13620, 30 seconds later Exhaust Fan (FN-1362) is shut down.
High Radiation	2) RSH-1363 (KY-13531A), High Radiation	2) High radiation in the exhaust stack Air Monitor system shuts down Exhaust Fan (FN-1362).
Excess Tank Dome space Vacuum	3) PSH-1361, Excess Vacuum	3) Excess vacuum shuts down Exhaust Fan (FN-1362).
Exhaust Fan (FN-1362) not operating	4) Fan Motor Contactor Auxiliary Contact	4) Exhaust Fan (FN-1362) is interlocked with Stack Air Monitor Vacuum Pumps. An auxiliary contact on the Fan contactor interlocks the fan with the vacuum pumps. The Exhaust Fan must be operating before Air Monitor Vacuum pumps can be turned on.
Exhaust Fan (FN-1362) not operating	5) Fan Motor Contactor Auxiliary Contact	5) Exhaust Fan (FN-1362) is interlocked with Exhaust Heater (HC-1362). An auxiliary contact on the Fan contactor interlocks the fan with the heater.
Recirculating Fan (FN-1361)	1) Fan Motor Contactor Auxiliary Contact	1) Recirculating Fan (FN-1361) is interlocked with Recirculating Heater (HC-1361). An auxiliary contact on the Fan contactor interlocks the fan with the heater.
Primary Chilled Water Circulation Pump (P-1364)	Pressure Switch PSL-13610	Low pressure shuts down primary pump (P-1364) and starts stand by pump (P-1365).
Chiller System	Flow Switch FSLL-1364	Chiller system shuts down on low flow.

HEPA = high-efficiency particulate air (filter).
HVAC = heating, ventilating, and air conditioning.
VERMS = Ventilation Exhaust Radiation Monitoring System

Table 2-4. C-Farm Submersible Pump Shutdown Interlocks.

Event	Sensing device	Interlock action
Submersible Slurry Pump Stator Winding Temperature High	TISHH-13615	Shuts down Submersible Slurry pump.
Submersible Slurry Pump Bearing Temperature #1 High	TISH-13614A	Shuts down Submersible Slurry pump.
Submersible Slurry Pump Bearing Temperature #2 High	TISH-13614B	Shuts down Submersible Slurry pump.
Submersible Slurry Pump Level Detection (Low), 1 Minute Time delay	KY-13645	Shuts down Submersible Slurry pump.
Seismic Sensor Contactor Cabinet, Unit 1361, Temperature High	TSHH-13636	High Temperature opens the contactor supplying power to the Submersible Slurry pump.
Seismic Sensor Contactor Cabinet, Unit 1362, Temperature High	TSHH-13637	High Temperature opens the contactor supplying power to the Submersible Slurry pump.
Seismic Event Sensor (Unit 1361)	ASH-1361A (Transverse) ASH-1361B (Horz.Long.) ASH-1361C (Vertical)	Seismic event opens the contactor supplying power to the Submersible Slurry pump.
Seismic Event Sensor (Unit 1362)	ASH-1362A (Transverse) ASH-1362B (Horz.Long.) ASH-1362C (Vertical)	Seismic event opens the contactor supplying power to the Submersible Slurry pump.

Table 2-5. C-Farm Booster Pump Shutdown Interlocks.

Event	Sensing device	Interlock action
Pump Bearing #1 Temperature High	TSH-1363A	Shuts down Slurry Booster pump.
Pump Bearing #2 Temperature High	TSH-1363B	Shuts down Slurry Booster pump.
Stator Winding Temperature High	TSHH-1364	Shuts down Slurry Booster pump.
Pump Suction Pressure Low	PISL-1363/KY-13632	Low pressure starts timing relay KY-13632, after a time delay, (1-60 seconds) the Slurry Booster Pump shuts down.
Seismic Sensor Contactor Cabinet, Unit 1361, Temperature High	TSHH-13636	High Temperature opens the contactor supplying power to the Slurry Booster pump.
Seismic Sensor Contactor Cabinet, Unit 1362, Temperature High	TSHH-13637	High Temperature opens the contactor supplying power to the Slurry Booster pump.
Seismic Event Sensor (Unit 1361)	ASH-1361A (Transverse) ASH-1361B (Horz.Long.) ASH-1361C (Vertical)	Seismic event opens the contactor supplying power to the Slurry Booster pump.
Seismic Event Sensor (Unit 1362)	ASH-1362A (Transverse) ASH-1362B (Horz.Long.) ASH-1362C (Vertical)	Seismic event opens the contactor supplying power to the Slurry Booster pump.

Table 2-6. AY-Farm Submersible Pump Shutdown Interlocks.

Event	Sensing device	Interlock action
Submersible Sluice Pump Stator Winding Temperature High	TISHH-0621	Shuts down Submersible Sluice pump.
Submersible Sluice Pump Bearing Temperature #1 High	TISH-0622A	Shuts down Submersible Sluice pump.
Seismic Sensor Contactor Cabinet, Unit 0621, Temperature High	TSHH-06211	High Temperature opens the contactor supplying power to the Submersible Sluice pump.
Seismic Sensor Contactor Cabinet, Unit 0622, Temperature High	TSHH-06212	High Temperature opens the contactor supplying power to the Submersible Sluice pump.
Seismic Event Sensor (Unit 0621)	ASH-0621A (Transverse) ASH-0621B (Horz.Long.) ASH-0621C (Vertical)	Seismic event opens the contactor supplying power to the Submersible Sluice pump.
Seismic Event Sensor (Unit 0622)	ASH-0622A (Transverse) ASH-0622B (Horz.Long.) ASH-0622C (Vertical)	Seismic event opens the contactor supplying power to the Submersible Sluice pump.

Table 2-7. AY-Farm Booster Pump Shutdown Interlocks.

Event	Sensing device	Interlock action
Pump Bearing Temperature #1 High	TSH-06210A	Shuts down Sluice Booster pump.
Pump Bearing Temperature #2 High	TSH-06210B	Shuts down Sluice Booster pump.
Stator Winding Temperature High	TSHH-0629	Shuts down Sluice Booster pump.
Pump Suction Pressure Low	PISL-0621/KY-0621	Low pressure starts timing relay KY-0621, after a time delay, (1-60 seconds) the Sluice Booster Pump shuts down.
Seismic Sensor Contactor Cabinet, Unit 0621, Temperature High	TSHH-06211	High Temperature opens the contactor supplying power to the Sluice Booster pump.
Seismic Sensor Contactor Cabinet, Unit 0622, Temperature High	TSHH-06212	High Temperature opens the contactor supplying power to the Sluice Booster pump.
Seismic Event Sensor (Unit 0621)	ASH-0621A (Transverse) ASH-0621B (Horz.Long.) ASH-0621C (Vertical)	Seismic event opens the contactor supplying power to the Sluice Booster pump.
Seismic Event Sensor (Unit 0622)	ASH-0622A (Transverse) ASH-0622B (Horz.Long.) ASH-0622C (Vertical)	Seismic event opens the contactor supplying power to the Sluice Booster pump.

CHAPTER 3.0
HAZARD EVALUATIONS AND ACCIDENT ANALYSES

This page intentionally left blank.

CHAPTER 3.0
HAZARD EVALUATIONS AND ACCIDENT ANALYSES

CONTENTS

3.0 HAZARD EVALUATIONS AND ACCIDENT ANALYSES 3-1
3.1 INTRODUCTION 3-1
3.2 REQUIREMENTS 3.2-1
3.3 HAZARD ANALYSIS 3.3-1
3.3.1 Methodology 3.3-1
3.3.2 Hazard Analysis Results 3.3.2-1
3.4 ACCIDENT ANALYSIS 3.4-1
3.4.1 Methodology 3.4.1-1
3.4.2 Evaluation Basis Accidents 3.4.2-1
3.4.2.1 Criticality 3.4.2.1-1
3.4.2.2 High-Efficiency Particulate Air Filter Failure Due to Exposure to High Pressure or High Temperature 3.4.2.2-1
3.4.2.3 Unfiltered Release 3.4.2.3-1
3.4.2.4 Fire in Contaminated Area 3.4.2.4-1
3.4.2.5 Caustic Spray Leak 3.4.2.5-1
3.4.2.6 Tank Failure Caused by Excessive Loads 3.4.2.6-1
3.4.2.7 Tank Failure Caused by Excessive Vacuum 3.4.2.7-1
3.4.2.8 Flammable Gas Deflagration 3.4.2.8-1
3.4.2.9 Organic Solvent Fire 3.4.2.9-1
3.4.2.10 In-Tank Fuel Fire/Deflagration 3.4.2.10-1
3.4.2.11 Tank Bump 3.4.2.11-1
3.4.2.12 Liner Breach Caused by Steam Between the Steel Liner and Concrete Shell in Tank 241-C-106 . . . . . 3.4.2.12-1
3.4.2.13 Subsurface Leak Remaining Subsurface . 3.4.2.13-1
3.4.2.14 Subsurface Leak Resulting in a Pool . . 3.4.2.14-1
3.4.2.15 Surface Leak Resulting in a Pool . . . 3.4.2-15-1
3.4.2.16 Spray Leak from Structure 3.4.2.16-1
3.4.2.17 Spray Leak from an Underground Waste Transfer Line 3.4.2.17-1
3.4.2.18 Natural Phenomena 3.4.2.18-1
3.4.3 Beyond Evaluation Basis Accidents 3.4.3-1
3.5 REFERENCES 3.5-1

LIST OF TABLES

3.3.2-1 Project W-320 Hazards Identification 3.3.2-5

3.3.2-2 Candidate Accidents Versus Analyzed Accidents Used for WRSS Analysis 3.3.2-6

3.3.2-3 Accident Analysis Sections 3.3.2-8

3.3.2-4 Safety SSCs and TSRs and Defense-in-Depth Controls for Representative Accidents 3.3.2-9

3.4.1-1 Maximum Sample Activity Concentrations for Tank Farms Waste (based on the 100% inventory bounding activity concentrations) 3.4.1-5

3.4.1-2 Project W-320 Analysis Liquid/Solid Ratios 3.4.1-6

3.4.1-3 Unit Liter Doses Used in the Waste Retrieval Sluicing System Analyses 3.4.1-6

3.4.1-4 Project W-320 Analysis Composite Unit Liter Doses 3.4.1-7

3.4.1-5 Tank Waste Liquids and Solids Analyte Concentrations (Revised) 3.4.1-8

3.4.1-6 Headspace Gas Composite Concentrations 3.4.1-10

3.4.1-7 Composite Sum-of-Fractions Values Used in Project W-320 Analyses. 3.4.1-11

3.4.2.1-1 Technical Safety Requirement Control for Nuclear Criticality Accident 3.4.2.1-5

3.4.2.2-1 Summary of Consequences and Frequencies for Filter Failure Due to High Temperature Without Controls 3.4.2.2-6

3.4.2.2-2 Summary of Consequences and Frequencies for Filter Failure Due to High Temperature With Controls 3.4.2.2-7

3.4.2.2-3 Safety Structures, Systems, and Components for High-Efficiency Particulate Air Filter Failure 3.4.2.2-8

3.4.2.2-4 Technical Safety Requirement Controls for High-Efficiency Particulate Air Filter Failure 3.4.2.2-9

3.4.2.2-5 Defense-In-Depth Controls for High-Efficiency Particulate Air Filter Failure 3.4.2.2-10

3.4.2.2.6 Summary of Consequences for Filter Failure Due to High Pressure Without Controls 3.4.2.2-11

LIST OF TABLES (cont)

3.4.2.3-1 Safety Structures, Systems, and Components for Unfiltered Releases 3.4.2.3-5

3.4.2.3-2 Technical Safety Requirement Control for Unfiltered Releases 3.4.2.3-5

3.4.2.3-3 Defense-in-Depth Controls for Unfiltered Releases . . . 3.4.2.3-5

3.4.2.4-1 Fire in a Contaminated Area Radiological Consequences . 3.4.2.4-3

3.4.2.4-2 Fire in a Contaminated Area Toxicological Consequences . 3.4.2.4-3

3.4.2.4-3 Summary of Consequences and Frequencies for Fire in a Contaminated Area Without Controls 3.4.2.4-4

3.4.2.4-4 Technical Safety Requirement Controls for Fire in Contaminated Area 3.4.2.4-5

3.4.2.4-5 Defense-In-Depth Controls for Potential Fire in Contaminated Area 3.4.2.4-6

3.4.2.5-1 Qualitative Consequences of a Caustic Spray Leak Assuming No Controls 3.4.2.5-4

3.4.2.5-2 Technical Safety Requirement Control for Caustic Spray Leak 3.4.2.5-5

3.4.2.5-3 Defense-in-Depth Controls for Caustic Spray Leaks . . . 3.4.2.5-6

3.4.2.6-1 Consequences of a Load Drop Assuming No Controls 3.4.2.6-6

3.4.2.6-2 Technical Safety Requirement Control for Load Drops . . 3.4.2.6-7

3.4.2.6-3 Defense-in-Depth Controls for Load Drops 3.4.2.6-8

3.4.2.8-1 Safety Structures, Systems, and Components for Flammable Gas Deflagrations 3.4.2.8-10

3.4.2.8-2 Technical Safety Requirement Controls for Flammable Gas Deflagrations 3.4.2.8-11

3.4.2.8-3 Defense-in-Depth Controls for Flammable Gas Deflagrations 3.4.2.8-12

3.4.2.9-1 Summary of Consequences and Frequencies for Organic Solvent Fire Without Controls 3.4.2.9-9

3.4.2.9-2 Summary of Consequences and Frequencies for Organic Solvent Fire With Controls 3.4.2.9-9

LIST OF TABLES (cont)

3.4.2.9-3 Technical Safety Requirement Controls for Organic Solvent Fires 3.4.2.9-10

3.4.2.9-4 Defense-in-Depth Controls for Organic Solvent Fire . . . 3.4.2.9-11

3.4.2.11-1 Consequences of a Tank Bump Assuming No Controls . . . 3.4.2.11-7

3.4.2.11-2 Safety Structures, Systems, and Components for Tank Bumps 3.4.2.11-8

3.4.2.11-3 Technical Safety Requirement Controls for Tank Bumps 3.4.2.11-9

3.4.2.11-4 Defense-in-Depth Controls for Tank Bumps 3.4.2.11-11

3.4.2.12-1 Consequences of a Liner Breach Assuming No Controls . . 3.4.2.12-6

3.4.2.12-2 Technical Safety Requirement Controls for Liner Breaches 3.4.2.12-7

3.4.2.12-3 Defense-in-Depth Controls for Liner Breaches. 3.4.2.12-8

3.4.2.13-1 Summary Consequences and Frequencies for a Subsurface Leak Remaining Subsurface Without Controls 3.4.2.13-5

3.4.2.13-2 Summary Consequences and Frequencies for a Subsurface Leak Remaining Subsurface With Controls 3.4.2.13-5

3.4.2.13-3 Safety Structures, Systems, and Components for Subsurface Leaks Remaining Subsurface 3.4.2.13-6

3.4.2.13-4 Technical Safety Requirement Controls for Potential Subsurface Leaks Remaining Subsurface 3.4.2.13-7

3.4.2.13-5 Defense-in-Depth Controls for Subsurface Leaks Remaining Subsurface 3.4.2.13-8

3.4.2.14-1 Summary of Consequences and Frequencies for Subsurface Leak Resulting in a Pool without Controls . 3.4.2.14-5

3.4.2.14-2 Summary of Consequences and Frequencies for Subsurface Leak Resulting in a Pool with Controls . . . 3.4.2.14-5

3.4.2.14-3 Safety Structures, Systems, and Components for Subsurface Leaks Resulting in Pools 3.4.2.14-6

3.4.2.14-4 Technical Safety Requirement Controls for Subsurface Leaks Resulting in Pools 3.4.2.14-7

LIST OF TABLES (cont)

3.4.2.14-5 Defense-in-Depth Controls for Subsurface Leaks Resulting in Pools 3.4.2.14-8

3.4.2.15-1 Safety Structures, Systems, and Components for Surface Leak Resulting in Pool 3.4.2.15-2

3.4.2.15-2 Technical Safety Requirement Controls for Surface Leak Resulting in Pool 3.4.2.15-3

3.4.2.15-3 Defense-in-Depth Controls for Surface Leak Resulting in Pool 3.4.2.15-4

3.4.2.16-1 Summary of Consequences and Frequencies Without Controls 3.4.2.16-8

3.4.2.16-2 Summary of Consequences and Frequencies With Controls . 3.4.2.16-8

3.4.2.16-3 Safety Structures, Systems, and Components for Spray Leaks 3.4.2.16-9

3.4.2.16-4 Technical Safety Requirement Controls for Spray Leaks 3.4.2.16-10

3.4.2.16-5 Defense-in-Depth Controls for Transfer System Spray Leaks 3.4.2.16-11

3.4.2.17-1 Technical Safety Requirement Controls for Spray Leak from Underground Waste Transfer Lines 3.4.2.17-3

3.4.2.17-2 Defense-in-Depth Controls for Spray Leak from Underground Waste Transfer Lines 3.4.2.17-4

This page intentionally left blank.

3.0 HAZARD EVALUATIONS AND ACCIDENT ANALYSES

3.1 INTRODUCTION

This chapter describes the methodology and presents the results of the hazard and accident analyses performed for WRSS components and operations described in Chapter 2.0, "Facility Description." This chapter also includes the facility hazard classification for WRSS. Based on the results of the hazard and accident analyses, Safety-Class and Safety-Significant structures, systems, and components (SSCs); Technical Safety Requirements (TSRs); and additional Defense-in-Depth controls are identified for protection of the public, onsite workers, and facility workers. This chapter also identifies design and operational features required specifically to protect the environment from uncontrolled releases of radioactive and hazardous material. Chapter 4.0 provides details of the safety structures, systems, and components identified herein. Chapter 5.0 provides the derivation basis of Technical Safety Requirements necessary to support the separate Technical Safety Requirement document required by DOE 5480.22, *Technical Safety Requirements*.

This page intentionally left blank.

3.2 REQUIREMENTS

The U.S. Department of Energy orders and standards that provide requirements and guidance for performing hazard and accident analyses to establish the safety basis of nuclear facilities are as follows:

- DOE 5480.23, *Nuclear Safety Analysis Reports*, Change 1 (1994)
- DOE-STD-1027-92, *Hazard Categorization and Accident Analysis Techniques for Compliance with DOE Order 5480.23, Nuclear Safety Analysis Reports* (1992)
- DOE-STD-3009-94, *Preparation Guide for U.S. Department of Energy Nonreactor Nuclear Facility Safety Analysis Reports* (1994).

Additional design codes, standards, regulations, and U.S. Department of Energy orders relevant to specific hazards are identified as required in other sections of this addendum.

Risk evaluation guidelines to be used in this Addendum are contained in Tables 5.3-2 and 5.3-3 of the main text of the BIO.

This page intentionally left blank.

3.3 HAZARD ANALYSIS

This section contains the methodology and results of the hazards analysis conducted for the WRSS facilities and operations. The types of events considered in the WRSS hazards analysis are internal events, external events, and natural phenomena that can cause the uncontrolled release of radioactive or hazardous materials and affect the public, workers, or the environment. Sabotage and terrorism are not considered.

3.3.1 Methodology

The methodology used to perform the WRSS hazards analysis is the same as that described in Section 5.2.1 and Section D2.0 (Appendix D) of the BIO main text. Details of the hazards analysis, as related to the WRSS, are presented below.

3.3.1.1 Hazard Identification. The hazards analysis includes identification of the hazards associated with the WRSS design, processes, and operations. The same methodology described in Section 5.2.1.1 and Section D2.1 (Appendix D) of the BIO was used for the WRSS. The hazard identification form and related checklist used for the WRSS evaluation are the same as those shown in Tables D2.1-1 and D2.1-2 (Appendix D) of the BIO.

It should be noted that the WRSS material at risk assumptions are based on the following:

- **Chemical Inventory** — The source for the WRSS maximum hazardous chemical inventory is WHC-SD-WM-SARR-011, *Toxic Chemical Considerations for Tank Farm Releases*. This document contains the bounding limits for chemical-unit-liter concentrations of the waste to be transported through the WRSS.

- **Radiological Inventory** — The WRSS worst-dose radiological inventory is based on WHC-SD-WM-SARR-016, *Tank Waste Composition and Atmospheric Dispersion Coefficients for Use in Safety Analysis Consequence Assessments*, and WHC-SD-WM-SARR-037, *Development of Radiological Concentrations and Unit Liter Doses for TWRS FSAR Radiological Consequence Calculations*. These documents contain bounding unit-liter doses for the tanks within the TWRS facility.

3.3.1.2 Hazard Topography. The TWRS hazard topography is described in Section D2.2 (Appendix D) of the BIO. The hazardous conditions identified for the components and activities of the WRSS were mapped into this topography.

3.3.1.3 Hazard Evaluation. Detailed discussions of hazard evaluation techniques are presented in Section 5.2.1.2 and Section D2.3 (Appendix D) of the BIO. The methodology described in these sections was applied to the hazard evaluation of the WRSS. A hazards and operability (HAZOP) study was performed by a team of cognizant Project, Operations, and Engineering personnel; safety analysts familiar with the WRSS; and technical experts in specialty areas for the WRSS. The results of the WRSS hazard evaluation are contained in Appendixes A through C of this addendum.

3.3.1.4 Candidate Accident Selection. The methodology for candidate accident selection is described in Section 5.2.1.3 and Section D.2.4 (Appendix D) of the BIO. This methodology was applied to accident selection for the WRSS. The initial list of accident groupings (bins) was based on the list of candidate accidents developed for the BIO.

3.3.1.5 Controls Identification. The methodology for controls identification is described in Section 5.2.1.4 and Section D.2.5 (Appendix D) of the BIO. This BIO methodology was also applied to controls identification for the WRSS.

3.3.2 Hazard Analysis Results

This section summarizes the results of the hazards analysis activities, control decision process, and accident analysis for onsite consequences. This includes results of the hazard identification and evaluation, accident selection, and control identification activities. Section 3.4 describes the accident analysis and consequences. Details of the hazard analysis are provided in the following appendices of this addendum:

- Appendix A, "Hazard Topography"
- Appendix B, "Representative Analyzed Accidents"
- Appendix C, "Hazard Evaluation Results"
- Appendix D, "Control Allocation Tables."

3.3.2.1 Hazard Classification. DOE 5480.23 requires the hazard classification of nuclear facilities and operations. Guidelines for hazard classifications that meet the requirements of DOE 5480.23 are provided in DOE-STD-1027-92. DOE-STD-1027-92 classifies a facility as either Hazard Category 1, 2, or 3 depending on the quantities of radioactive material in the facility. Hazard Category 2 and 3 facilities contain quantities of radioactive material in excess of the threshold values in Table A.1 of DOE-STD-1027-92. A facility that does not exceed the DOE-STD-1027-92 Hazard Category 3 threshold for radioactive material, but possesses some radioactive material, is considered a radiological facility.

Waste retrieval operations were specifically excluded from the current BIO; the WRSS safety documentation is intended to augment the current BIO for retrieval of the Tank 241-C-106 waste via sluicing. The WRSS operations involve different mixtures of waste types than covered in the BIO. WRSS operations involve higher pressures and flow rates than analyzed in the BIO. In addition, new ventilation systems are considered. The results of the hazard evaluation done specifically for WRSS operations are summarized in Table 3.3.2-1. Table 3.3.2-2 provides a tabulation of some of the differences between WRSS operations and those covered in the BIO.

WRSS will transfer waste from Tank 241-C-106 to the double-shell Tank 241-AY-102, both of which are part of the Tank Waste Remediation System (TWRS). The TWRS has a Hazard Category 2 designation as described in the BIO main text. WRSS will not have any waste associated with it other than the waste it is transferring from one tank to the other. It is not a separate facility, but is physically attached to TWRS. Based on these factors, it is recommended that WRSS be given a Hazard Category 2 designation.

3.3.2.2 Hazard Evaluation. The hazard evaluation activity for the WRSS (documented in LA-UR-97-1581, *Preliminary Hazard Analysis for Project W-320*) determined a set of potential hazardous conditions that could result in the uncontrolled release of radioactive and/or hazardous material. The results of the accident selection, frequency/consequence assessment, and control allocation are given in Appendixes B, C, and D, respectively of this addendum.

The hazard evaluations support the selection of accidents for more detailed analysis and the identification of safety controls. The controls for the safe operation of WRSS are identified based on both the accident and the hazard analysis results. This section addresses the accident selection and identification of controls. It covers controls for offsite, onsite, worker, and environmental consequences. Section 3.4 describes the details of the accident consequence analysis.

3.3.2.2.1 Accident Selection. Hazardous conditions identified by the hazard evaluation, specifically conducted for WRSS operations, were used to select accidents for analysis and evaluation (LA-UR-97-1581). The design characteristics and configuration of the WRSS equipment was considered in determining the hazards. The hazards specific to WRSS operations are summarized in Table 3.3.2-1 and were compared with those identified for the BIO. This comparison resulted in the grouping of the identified hazards into groups (or bins) for further evaluation which corresponded to the groups established for analysis in the main text of the BIO. The groups of hazards are represented in the accident analysis by representative and bounding accidents. The titles of the representative accidents were changed to match the terminology of the BIO main text, as reflected in Table 3.3.2-2. Further evaluation was then performed to determine if the analysis in the main text of the BIO was bounding or if the WRSS operations required specific analyses. Table 3.3.2-3 identifies each analyzed accident and provides a reference to the appropriate section of the addendum and the main text of the BIO.

It is important to note that all the hazardous conditions represented by the same accident analysis are not the same in every respect. Each unique hazard represented by a specific analysis can have different initiating events, which can result in different controls being applied to prevent or mitigate the hazard.

Appendix B of this addendum lists the analyzed (representative) accidents as developed in the hazards evaluation, as well as the hazardous conditions represented by each accident.

For each hazardous condition listed in Appendix B of this addendum, the following information is provided:

- The accident release category that identifies hazardous conditions that could result in common accident release attributes
- A specific and unique identification number associated with each hazardous condition
- The material at risk
- The hazardous condition that defines a release (information is provided on the location of the release and whether the material is hazardous or toxic)
- The cause of the hazardous condition

- The initial frequency and consequence assessment for an accident associated with a particular hazardous condition (this assessment assumes no controls or active systems were in place)
- A cause group identifier
- A representative accident number that is assigned to a hazardous condition grouping (bin).

3.3.2.2.2 Defense-in-Depth. The hazardous conditions identified for the WRSS are shown in Appendix C of this addendum and are arranged according to consequence category. Where applicable, Defense-in-Depth controls have been allocated to hazardous conditions. In addition, Defense-in-Depth controls have been allocated to the hazardous conditions with significant facility worker consequences. For each accident analyzed, a summary of the structures, systems, and components and Technical Safety Requirements along with the Defense-in-Depth controls are shown in Table 3.3.2-4.

3.3.2.2.3 Facility Worker Protection. In the course of the WRSS hazards analysis process, a number of potential hazardous conditions only affecting the facility worker were identified. These hazardous conditions were divided into radiation protection and occupational safety concerns.

Radiation Protection. This section discusses only potential facility worker radiation exposure not related to the loss of containment of radioactive material. As a result of the hazards analysis performed for WRSS, four potential facility worker radiation exposure concerns specifically associated with WRSS were identified. These potential facility worker radiation exposure hazardous conditions, along with their identifiers and causes, are presented in Table C-5 of Appendix C of this addendum. All WRSS-specific radiation protection issues are currently covered under the Hanford Site radiation protection program.

Occupational Safety. The hazards analysis performed on WRSS and its physical interfaces with other facilities also identified a number of potential facility worker occupational safety concerns. Potential facility worker occupational safety hazardous conditions, along with their identifiers and causes, are presented in Appendix C, Table C-6 of this addendum. All of the identified occupational hazards identified for WRSS are covered under the Hanford Site occupational safety program and are addressed in HNF-SD-WM-HSP-002, *Tank Farms Health and Safety Plan*.

3.3.2.2.4 Environmental Protection. The hazard evaluation included a qualitative assessment of the environmental impact of hazardous conditions that could potentially result in an uncontrolled release of radioactive or hazardous material. The results of this assessment are given in Appendix C, Table C-4 of this addendum. Hazardous conditions with significant environmental consequences (E2 or E3) are identified in the hazard analysis conducted for the WRSS (Table C-4 in Appendix C of this addendum). Section 5.4.4 of the main text of the BIO provides discussion and additional required controls to protect the environment.

The impacts of tank waste leaking to the soil are covered in DOE/EIS-0189, *Final Environmental Impact Statement for the Tank Waste Remediation System*, and in WHC-SD-WM-ES-218, *Engineering Study of Tank Leaks Related to Hydraulic Retrieval of Sludge from Tank 241-C-106*. Multiple options, including the no action which postulates all the waste from 177 tanks leaks to the ground, are reported in DOE/EIS-0189. Appendix F, Table F.2.2.13 of DOE/EIS-0189 gives duration of the contaminant release as occurring over a time period of 2.85 to 158 years. The waste reaches the interface between the vadose zone and the groundwater 140 to 250 years later (DOE/EIS-0189). A postulated 151,400 L (40,000 gal) during sluicing operations is assumed in WHC-SD-WM-ES-218. Travel time to the aquifer is estimated to be 60 years (WHC-SD-WM-ES-218). The effect of the leak to the soil (including previous leaks and spills in the tank farms) may require some form of soil remediation. This will cause future clean up costs to be increased. However, both these studies indicate that there is no short-term risk (1 year or less) to the onsite receptor located at 100 m (328 ft) or the offsite receptor.

Table 3.3.2-1. Project W-320 Hazards Identification.[a]

Energy Classification	Accident Number[b]	
	PT	PE
Corrosive	2,4,5	1,2,4,5
Explosive/pyrophoric	6,7,8	6,7,8
Nuclear criticality	15,16	15
Flammable materials	11,13,14	11,13,14
Thermal radiation	5	N/A
Chemical reactions	1	N/A
Friction	3,5	1,2,3,5
Electrical	3,4,5,6,9,10,11,14,16	3,4,5,6,7,8,9,10,11,12,14,16,18
Kinetic-rotational	2,3,4	2,3,4,7
Kinetic-linear	1,5,7	1,4,5,7
Mass, gravity, height	3,5,11,15,16	2,3,5,10,11,15,16
Pressure-volume	7,9,11	5,6,8,9,11,12
Thermal (except radiant)	N/A	3,6

[a] The hazards identification represents the hazards that could potentially cause an uncontrolled release of radioactive or hazardous materials only. Hazards only resulting in personnel injury are not included.

[b] The numbers correspond to a section number, 3.4.2.x, for example the number "3" refers to Section 3.4.2.3.

N/A = not applicable.
PT = potentially present in the facility.
PE = potentially present elsewhere in/adjacent to facility.

Table 3.3.2-2. Candidate Accidents Versus Analyzed Accidents Used for WRSS Analysis. (2 sheets)

Difference between Representative Accidents and Analyzed Accidents		
Representative Accidents	Analyzed Accidents	Comments
1. Pump Vortices Criticality in Tank	1. Nuclear Criticality	WRSS-specific analysis performed
2. Release through Failed HEPA Filter due to a Tank Bump	2. HEPA Filter Failure - high temperature - high pressure	WRSS-specific analysis performed - source term for WRSS operations different from BIO analysis
3. Ventilation Ducting Breach/Unfiltered Release	3. HEPA Filter Failure - high temperature - high pressure	Consequences bounded by accident 2, above
4. Flammable Gas Ignition in Pit	4. Fuel Fire in Contaminated Area	BIO analysis found to be bounding
5. Caustic Spray Leak	5. Caustic Spray Leak	BIO analysis found to be bounding
6. Tank Failure due to Flooding Dome Load	6. Tank Failure due to Excessive Loads	WRSS-specific analysis performed - analyzed using AWF solids
7. Tank Failure due to Excessive Vacuum	7. Tank Failure due to Excessive Loads	Consequences bounded by accident 6, above
8. Flammable Gas Release Event with Ignition	8. Flammable Gas Deflagrations	BIO analysis (qualitative) adopted
9. Organic Layer Formation and Subsequent Organic Fire	9. Organic Solvent Fire - Pool Fires - Puddle Fires - Wick Stabilized Fires	WRSS-specific analysis performed, analyzed different organic solvent than the BIO
10. In-Tank Propylene Glycol Fire	10. In-Tank Fuel Fire/Deflagrations	Consequences bounded by accident 9, above
11. Steam Bump	11. Tank Bump	WRSS-specific analysis performed - unique to WRSS activities
12. Liner Breach due to Steam between Steel Liner and Concrete Shell in C-106	12. Liner Breach due to Steam between Steel Liner and Concrete Shell in C-106	WRSS-specific analysis performed - accident scenario not part of the BIO
13. Transfer Line Develops Leak and Secondary Casing is Defective	13. Subsurface Leak remaining Subsurface	WRSS-specific analysis performed - transfer line configuration different than that analyzed in the BIO
14. Local Flooding during Transfer/Line Uncovered and Breached	14. Subsurface Leak Resulting in Pool	WRSS-specific analysis performed - higher flow rate/pressure and ULDs than analyzed in the BIO
15. Pipe Break or Leak in Pit, Drain Cover On, Pit Fills and Overflows	15. Surface Leak Resulting in Pool	WRSS-specific analysis performed - higher flow rate/pressure and ULDs than analyzed in the BIO
16. Spray Leak from Flushing Connection in AY-102 Pit during Sluicing Transfer	16. Spray Leak from Structure	WRSS-specific analysis performed - unique WRSS configuration
17. Spray Leak from Waste Transfer Line	17. Spray Leak from an Underground Waste Transfer Line	WRSS-specific analysis performed - higher flow rate/pressure and ULDs than analyzed in the BIO

Table 3.3.2-2. Candidate Accidents Versus Analyzed Accidents Used for WRSS Analysis. (2 sheets)

Difference between Representative Accidents and Analyzed Accidents		
Representative Accidents	Analyzed Accidents	Comments
18. Natural Phenomena - high wind - dust devil - flood - range fire - ash fall - lightning - seismic	18. Natural Phenomena (Note: Not analyzed)	No specific analyses Natural Phenomena were performed. They were considered as potential initiators for the accidents listed above

AWF = Aging Waste Facility.
HEPA = High-efficiency particulate air (filter).
ULD = Unit-liter dose.
WRSS = Waste retrieval sluicing system.

Table 3.3.2-3. Accident Analysis Sections.

Section which addresses analyzed accident			
Number	Analyzed accidents	Addendum Section	Main Text Section
1	Criticality	3.4.2.1	5.3.2.1
2	HEPA Filter Failure Due to Exposure to High Pressure or High Temperature	3.4.2.2	5.3.2.2
3	Unfiltered Release	3.4.2.3	5.3.2.2
4	Fire in Contaminated Area	3.4.2.4	5.3.2.3
5	Caustic Spray Leak	3.4.2.5	5.3.2.9
6	Tank Failure Due to Excessive Loads	3.4.2.6	5.3.2.13
7	Tank Failure Due to Excessive Vacuum	3.4.2.7	5.3.2.13
8	Flammable Gas Deflagration	3.4.2.8	5.3.2.14
9	Organic Solvent Fire	3.4.2.9	5.3.2.15
10	In-Tank Fuel Fire/Deflagration	3.4.2.10	5.3.2.16
11	Tank Bump	3.4.2.11	5.3.2.22
12	Liner Breach Due to Steam Between the Steel Liner and Concrete Shell in 241-C-106	3.4.2.12	N/A
13	Subsurface Leak Remaining Subsurface	3.4.2.13	5.3.2.7
14	Subsurface Leak Resulting in a Pool	3.4.2.14	5.3.2.19
15	Surface Leak Resulting in a Pool	3.4.2.15	5.3.2.18
16	Spray Leak from Structure	3.4.2.16	5.3.2.20
17	Spray Leak from an Underground Waste Transfer Line	3.4.2.17	5.3.2.21
18	Natural Phenomena	3.4.2.18	5.3.2.23

N/A = not applicable.
HEPA = high-efficiency particulate air (filter).

Table 3.3.2-4. Safety SSCs and TSRs and Defense-in-Depth Controls for Representative Accidents. (11 sheets)

#	Representative Accidents BIO Addendum	Structures, Systems, and Components	Technical Safety Requirement	Defense-In-Depth Controls
1.	Nuclear Criticality (3.4.2.1)	None required	SL: None required LCS: None required LCO: None required AC 5.7 Nuclear Criticality Safety - Establish CPSs based on CSERs - Recovery actions if limits exceeded - Criticality training program	None
2.	HEPA Filter Failure-Exposure to High Temperature or Pressure (3.4.2.2)	SS: Continuous air monitor-interlock on 241-A-702 ventilation system SS: Continuous air monitor-interlock on 241-AZ-702 ventilation system SS: Continuous air monitor-interlock on 296-P-16 ventilation system SS: Continuous air monitor-interlock on 296-C-006 ventilation system	SL: None required LCS: None required LCO 3.1.4 Ventilation Stack CAM Interlock Systems AC 5.18 HEPA Filter Controls - Periodic radiation surveillance - Replacement based on accumulation - Aerosol test upon installation (AWF 241-AZ-702) - Periodic aerosol test (AWF 241-AZ-702)	HEPA Filter Delta P - Low Delta P interlock across the HEPA filters on the ventilation system (where provided) - High Delta P alarm across the HEPA filters on the ventilation system - Periodic surveillance of HEPA Delta P and continuous air monitor Record Sampler Heater Over Temperature - Interlock/alarm (where provided) HEPA Filter Replacement - Typically performed at 1 mSv/h (100 mrem/h)
3.	Unfiltered Release (3.4.2.3)	SS: Continuous air monitor-interlock on 241-A-702 ventilation system SS: Continuous air monitor-interlock on 241-AZ-702 ventilation system SS: Continuous air monitor-interlock on 296-P-16 ventilation system SS: Continuous air monitor-interlock on 296-C-006 ventilation system SS: SSCs in BIO Addendum 1, Section 3.4.2.11 (Tank Bump) also apply as Safety Significant	SL: None required LCS: None required LCO: None required AC 5.25 Ventilation Controls - Visual inspection of aboveground recirculation ventilation ductwork for Tank 241-C-106 every 24 hours during sluicing (only applies after 296-C-006 ventilation system is installed) TSR controls in BIO Addendum 1, Sections 3.4.2.2 (HEPA Filter Failure) and 3.4.2.11 (Tank Bump) also apply	Transfer Controls: - Waste compatibility controls Ignition Controls - Speed Limit Controls Plastic sleeves on aboveground ventilation flanges

Table 3.3.2-4. Safety SSCs and TSRs and Defense-in-Depth Controls for Representative Accidents. (11 sheets)

#	Representative Accidents BIO Addendum	Structures, Systems, and Components	Technical Safety Requirement	Defense-In-Depth Controls
4.	Fire in Contaminated Area (3.4.2.4)	None required	SL: None required LCS: None required LCO: None required AC 5.10 Ignition Controls - Vehicle fuel system protection - Physical barriers outside tank farms - Speed limit controls AC 5.14 Emergency Preparedness - Response procedures	Fire Protection Program Radiation Protection Program Contamination Control Program Vehicle positioning spotters Tank Farm fences Vegetation Control Program
5.	Caustic Spray Leak (3.4.2.5)	None required	SL: None required LCS: None required LCO: None required AC 5.23 Caustic Transfer Controls - Plastic sleeving around delivery piping - Caustic delivery system transfer pressure ≤ 125 psig or below sodium hydroxide cargo tanks specified maximum allowable operating pressure whichever is lower - Piping thickness - Sodium hydroxide cargo tanks meet applicable DOT specifications - Traffic barriers around cargo tank	Operator training TWRS Hazardous Material Protection Program Emergency response plans and procedures
6.	Tank Failure Due to Excessive Loads (3.4.2.6)	None required	SL: None required LCS: None required LCO: None required AC 5.16 Dome Loading Controls - Hanford Site Hoisting and Rigging Manual for critical lifts - Limits on load height - Uniform and concentrated load limits	Radiation Protection Program Health and Safety Plan - restricting activities in high winds Job Control System - including requirement to place load absorber material around riser when very heavy loads are installed Operator training Operating procedures Emergency response plans and procedures

Table 3.3.2-4. Safety SSCs and TSRs and Defense-in-Depth Controls for Representative Accidents. (11 sheets)

#	Representative Accidents BIO Addendum	Structures, Systems, and Components	Technical Safety Requirement	Defense-In-Depth Controls
7.	Tank Failure Due to Excessive Vacuum (3.4.2.7)	None required	SL: None required LCS: None required LCO: None required AC: None required	None
8.	Flammable Gas Deflagrations (3.4.2.8)	SC: 241-AY-102 Primary tank ventilation system SC: Primary tank leak detection systems SC: 241-C-106 tank ventilation system	SL: None required LCS: None required LCO 3.2.1 DST and AWF Tank Ventilation Systems LCO 3.2.2 SST Ventilation Systems - Active LCO 3.2.6 Primary Tank Leak Detection Systems AC 5.9 Flammability Controls AC 5.10 Ignition Controls AC 5.11 Flammable Gas Monitoring Controls AC 5.14 Emergency Preparedness - Response Procedures AC 5.18 HEPA Filter Controls - Periodic radiation surveillance - Replacement based on accumulation	Monitor dome pressure in Tanks 241-C-106 and 241-AY-102 during sluicing. Periodic video monitoring of the waste in Tank 241-AY-102. Measure background concentrations in both tanks for 3-4 weeks prior to sluicing. Monitor the ventilation flow rates in both tanks during and after sluicing. Monitor level growth and use barometric pressure evaluation after sluicing. Flammable gas monitoring during sluicing HEPA filter replacement typically performed at 1 mSv/h (100 mrem/h).

Table 3.3.2-4. Safety SSCs and TSRs and Defense-in-Depth Controls for Representative Accidents. (11 sheets)

#	Representative Accidents BIO Addendum	Structures, Systems, and Components	Technical Safety Requirement	Defense-In-Depth Controls
9.	Organic Solvent Fire (3.4.2.9)	None required	SL: None required LCS: None required LCO: None required AC 5.10 Ignition Controls - Lightning (stop intrusive work, secure elevated equipment) - Barrier for hot metal during flame cutting - Vehicle fuel system protection - Physical barriers outside tank farms - Speed limit controls AC 5.12 Transfer Controls - Evaluate impact on organic solvent transfer AC 5.14 Emergency Preparedness - Response procedures AC 5.18 HEPA Filter Controls - Periodic radiation surveillance - Replacement based on accumulation - Aerosol test upon installation (AWF 241-AZ-702) - Periodic aerosol test (AWF 241-AZ-702)	Vehicle positioning spotters Tank farm fences HEPA filter replacement typically performed at 1 mSv/h (100 mrem/h)
10.	In-Tank Fuel Fire/ Deflagration (3.4.2.10)	None required	SL: None required LCS: None required LCO: None required Note: This accident credits the same TSR controls as the Organic Solvent Fire above (3.4.2.9).	Note: This accident credits the same Defense-in-Depth controls as the Organic Solvent Fire above (3.4.2.9)

Table 3.3.2-4. Safety SSCs and TSRs and Defense-in-Depth Controls for Representative Accidents. (11 sheets)

#	Representative Accidents BIO Addendum	Structures, Systems, and Components	Technical Safety Requirement	Defense-In-Depth Controls
11.	Tank Bump (3.4.2.11)	SC: Tank 241-C-106 ventilation system SC: Tank 241-AY-102 annulus ventilation system SC: Tank 241-AY-102 primary tank ventilation system	SL: None required LCO 3.2.1 DST and AWF Ventilation systems LCS/LCO 3.3.1 SST Waste Temperature Controls - Temperature ≤ 91 °C (205 °F) LCS/LCO 3.3.2 DST and AWF Tank Waste Temperature Controls - Temperature ≤ 91 °C (195 °F) (or 91 °C/102 °C [195 °F/215 °F] based on waste level) LCO 3.3.3 Tank 241-AY-102 Annulus Ventilation System - Operability AC 5.12 Transfer Controls - Incremental transfer with material balance after each sluicing batch of 12 hours maximum duration during transfer operations - Ensure final tank state within analyzed conditions AC 5.19 Process Instrumentation and Measuring and Test Equipment - Calibrate and properly maintain AC 5.25 Ventilation Controls - Provide cooling capability for Tank 241-AY-102 after 0.6 m (2 ft) of waste added (primary and annulus ventilation systems)	ALCs will be disabled prior to the start of sluicing Communications between the 241-C-106 and 241-AY-102 control trailers will be maintained during sluicing operations Pump pit and sluice pit cover blocks (including removable plugs) will be in place prior to any sluicing operations and prior to enabling of the sluice or slurry pumps The transfer pumps associated with the sluice and slurry lines will be administratively locked out except as necessary for actual sluicing operations Emergency Response Plan/Procedures

Table 3.3.2-4. Safety SSCs and TSRs and Defense-in-Depth Controls for Representative Accidents. (11 sheets)

#	Representative Accidents BIO Addendum	Structures, Systems, and Components	Technical Safety Requirement	Defense-In-Depth Controls
11.	Tank Bump (3.4.2.11) (Continued)		AC 5.26 Tank 241-C-106 Waste Temperature Controls: - Predict saturation temperatures at the bottom of Tank 241-C-106. Use predicted height of the waste throughout the incremental transfer and periodically monitor the waste temperature. - During the first two 0.3 m (1 ft) transfer increments, the liquid level established before start of each sluicing increment will be maintained throughout the increment.	

Table 3.3.2-4. Safety SSCs and TSRs and Defense-in-Depth Controls for Representative Accidents. (11 sheets)

#	Representative Accidents BIO Addendum	Structures, Systems, and Components	Technical Safety Requirement	Defense-In-Depth Controls
12.	Liner Breach Caused by Steam Between the Steel Liner and Concrete Shell in Tank 241-C-106 (3.4.2.12)	None required	SL: None required LCS/LCO 3.3.1 SST Waste Temperature Controls (prior to start of sluicing) - Temperature ≤ 96°C (205 °F) AC 5.12 Transfer Controls - Ensure final tank state within analyzed conditions AC 5.19 Process Instrumentation and Measuring and Test Equipment - Calibrate and properly maintain AC 5.26 Tank 241-C-106 Waste Temperature Controls - Establish temperature controls that are < T_{sat} for existing tank conditions (applies during and after sluicing)	Active ventilation or other heat removal mechanisms will be maintained Pump pit and sluice pit cover blocks (including removable plugs) will be in place whenever the conditions for initiation of a liner breach are present (i.e., known leaking liner, active ventilation system down indefinitely) Emergency response plan/procedures A material balance after each sluicing batch of 12 hours maximum duration during transfer operations Level monitoring to identify leakage into the liner of Tank 241-C-106 Syphon protection is provided on the slurry distributor and the submersible sluice pump discharge line within Tank 241-C-106 Communication between control rooms for Tanks 241-C-106 and 241-AY-102 will be maintained during sluicing operations Raw water is metered Design feature - The hose is engineered to maintain integrity Design feature - Positive mechanical stops are provided to limit nozzle travel to less than 25° above horizontal Sluicing Controls - Sluice stream not directed at waste near the walls during early stages

Table 3.3.2-4. Safety SSCs and TSRs and Defense-in-Depth Controls for Representative Accidents. (11 sheets)

#	Representative Accidents BIO Addendum	Structures, Systems, and Components	Technical Safety Requirement	Defense-In-Depth Controls
13.	Subsurface Leak Remaining Subsurface (3.4.2.13)	SS: Transfer Line pipe-in-pipe encasement SS: Transfer leak detection systems SS: Tank level detection systems	SL: None required LCS: None required LCO 3.1.3 Transfer Leak Detection Systems AC 5.12 Transfer Controls - Establish communication between control rooms for Tanks 241-C-106 and 241-AY-102 during sluicing operations - Material balance after each sluicing batch of 12 hours maximum duration during transfer operations - Configuration management - Independent transfer route verification AC 5.13 Encasement Seal Loop Controls - Encasement drain line valve not closed AC 5.17 Excavation Controls (3.4.2.17) AC 5.20 Transfer Pump Administrative Lock Controls	Pressure/leak testing of transfer route before material transfer Operator training Operating procedures Emergency response plan/procedures Seismic shutdown switches
14.	Subsurface Leak Resulting in Pool (3.4.2.14)	SC: Transfer Line pipe-in-pipe encasement SC: Transfer leak detection systems SS: Tank level detection systems	SL: None required LCS: None required LCO: 3.1.3 Transfer Leak Detection Systems AC 5.12 Transfer Controls - Material balance after each sluicing batch of 12 hours maximum duration during transfer operations - Establish communications between control rooms for Tanks 241-C-106 and 241-AY-102 during sluicing operations - Configuration management - Independent route verification during transfer setup AC 5.14 Emergency Preparedness - Response procedures	Walkdowns are performed once/shift to detect surface leaks from transfer line WRSS transfer lines are equipped with encasement leak detectors Monitor flow rate Seismic shutdown switches

Table 3.3.2-4. Safety SSCs and TSRs and Defense-in-Depth Controls for Representative Accidents. (11 sheets)

#	Representative Accidents BIO Addendum	Structures, Systems, and Components	Technical Safety Requirement	Defense-In-Depth Controls
15.	Surface Leak Resulting in a Pool (3.4.2.15)	SC: Transfer leak detection system SS: Transfer System Covers SS: Tank level detection systems SC: Primary tank leak detection system SC: Transfer Line pipe-in-pipe encasement SS: Backflow preventers	SL: None required LCS: None required LCO 3.1.1 Transfer System Covers and Entry Doors LCO 3.1.3 Transfer Leak Detection Systems LCO 3.2.6 Primary Tank Leak Detection Systems AC 5.12 Transfer Controls - Material Balance after each sluicing batch of 12 hours maximum duration during transfer operations - Establish communication between control rooms for Tanks 241-C-106 and 241-AY-102 during sluicing operations - Configuration management - Cap/blank nozzles when not in use - Vehicle restrictions around transfer lines AC 5.14 Emergency Preparedness - Response procedures AC 5.17 Excavation Controls (3.4.2.17) AC 5.20 Transfer Pump Administrative Lock Controls AC 5.22 Transfer System Cover Removal Controls	Tank farms are visually surveyed by operators at least once a day Pit drains, where open Encasement leak detectors Backflow preventers Material balance after each sluicing batch of 12 hours maximum duration during transfer operations, including total material transferred and solids loading calculation Seismic shutdown switches

Table 3.3.2-4. Safety SSCs and TSRs and Defense-in-Depth Controls for Representative Accidents. (11 sheets)

#	Representative Accidents BIO Addendum	Structures, Systems, and Components	Technical Safety Requirement	Defense-In-Depth Controls
16.	Spray Leak from Structure (3.4.2.16)	SC: Transfer system covers SS: Backflow preventers SC: Transfer Line pipe-in-pipe encasement SC: Stack CAM and interlock to exhaust fan (241-A-702, 241-AZ-702, 296-P-16, and 296-C-006 Ventilation Systems)	SL: None required LCS: None required LCO 3.1.1 Transfer System Covers and Entry Doors LCO 3.1.4 Ventilation Stack CAM Interlock Systems AC 5.12 Transfer Controls - Configuration management - Independent transfer route verification - Vehicle restrictions AC 5.13 Encasement Seal Loop Controls - Encasement drain line valve not closed AC 5.20 Transfer Pump Administrative Lock Controls AC 5.22 Transfer System Cover Removal Controls	Repositioned jumpers are in service tested during initial sluicing. Cameras lowered through penetrations in the cover block are used to verify initial jumper integrity during the leak test Process pit and vault pit leak detectors Material balance after each sluicing batch of 12 hours maximum duration during transfer operations, including total material transferred and solids loading calculation Encasement leak detectors Isolation valves; manual valve is closed to isolate the flush system when not in use Backflow preventers Seismic shutdown switches
17.	Spray Leak from an Underground Waste Transfer Line (3.4.2.17)	None required	SL: None required LCS: None required LCO: None required AC 5.17 Excavation Controls - An excavation permit shall be required when excavating in areas where waste transfer lines exist - Encased pipe outside of the tank farm boundaries shall be identified with permanent aboveground labels	Access control • T-bars and chains Material balances after each sluicing batch of 12 hours maximum duration during transfer operations, including total material transferred and solids loading calculation Seismic shutdown switches

Table 3.3.2-4. Safety SSCs and TSRs and Defense-in-Depth Controls for Representative Accidents. (11 sheets)

#	Representative Accidents BIO Addendum	Structures, Systems, and Components	Technical Safety Requirement	Defense-In-Depth Controls
17.	Spray leak from an Underground Waste Transfer Line (3.4.2.17 Continued)		- Waste transfers are prohibited through lines uncovered by excavation activities unless compensatory controls are established - Waste transfers shall not be conducted in transfer lines located within approximately 4.6 m (15 ft) of ongoing excavation activities. - Prior to initiation of an excavation activity, identify emergency response actions and establish communications between the excavation site and operations personnel to ensure immediate shutdown of waste transfers when leakage is indicated.	
18.	Natural Phenomena - Seismic Events (3.4.2.18)		SL: None required LCS: None required LCO: None required AC: Refer to BIO main text	Refer to BIO main Text

AC = Administrative control.
ALC = air lift circulator.
AWF = aging waste facility.
BIO = Basis for Interim Operation.
CAM = continuous air monitor.
DOT = Department of Transportation.
DST = double-shell tank.
HEPA = high-efficiency particulate air (filter).
JCO = Justification for Continued Operation.
LCO = Limiting Condition for Operation.
LCS = Limiting Condition for Safety.
SC = Safety-Class.
SL = safety limit.
SS = Safety-Significant.
SST = single-shell tank.
TSR = Technical Safety Requirement.
TWRS = Tank Waste Remediation System.

This page intentionally left blank.

3.4 ACCIDENT ANALYSIS

The following sections describe the results of the analyses of the potential accidents identified in Section 3.3.2. The consequence calculation methods common to the analyses are summarized in Section 5.3.1 of the BIO main text, including a discussion of receptor locations and exposure pathways, radionuclide and hazardous chemical inventories and associated unit liter dose (ULD) and sum-of-fraction values, atmospheric dispersion, and the equations used to calculate downwind radiological and toxicological consequences. Section 3.4.1 describes how the WRSS-unique ULD and sum-of-fraction values were selected.

Results of the evaluation basis accident analyses that are unique to WRSS are presented in Section 3.4.2. Evaluation basis accidents are analyzed to identify the set of Safety-Class and Safety-Significant structures, systems, and components and TSRs. These are identified by performing an analysis in which no credit is taken for preventive or mitigative controls. The results of the analyses without controls are compared to risk guidelines. If the guidelines are exceeded, safety structures, systems, and components and TSRs that reduce the event frequency or consequences are added. Analyses with controls (that assume the identified controls are functioning as intended) are then performed.

This page intentionally left blank.

3.4.1 Methodology

This section summarizes the general calculation methods used to quantify the radiological and toxicological consequences of postulated accidents. The individual analyses, presented in Section 3.4.2, summarize the consequence calculation methods specific to individual postulated accidents. Accidents involving the transfer lines, such as the spray leaks and pool leaks, were evaluated at a flow rate of 28.4 L/s[1] (450 gpm) for normal flow and 41.0 L/s (650 gpm) for flow without restriction. The project requested that the accident analysis use these values to provide a conservative envelope for the anticipated flow rate of approximately 22.1 L/s (350 gpm). In addition, the source term is expected to change over the course of the transfer operations because of factors like dissolution of solids and liquid/solid fractions. To account for these, conservative assumptions have been made (below). Samples will be periodically taken to ascertain that the project is remaining within the analyzed envelope.

3.4.1.1 Radiological Consequence Calculation Methodology.

3.4.1.1.1 Radionuclide Inventory. WHC-SD-WM-SARR-037 discusses in detail the development of the radionuclide inventory. Table 3.4.1-1 lists the radionuclide constituents that make up the individual ULDs that were used in the accident analysis for WRSS operations.

3.4.1.1.2 Exposure Pathways. Two potential radiological exposure pathways (i.e., internal and external) are associated with releases of radioactive materials. The total effective dose equivalent calculated for an individual is equal to the sum of the dose contributions from these two exposure pathways. See Section 5.3.1 of the BIO for more detail.

3.4.1.1.3 Dose Calculation Methods. WHC-SD-WM-SARR-016 presents an overview of (1) the method used to calculate the inhalation dose to the maximum onsite individual, and (2) the inhalation, ingestion, and resuspension dose to the maximum offsite individual. WHC-SD-WM-SARR-037 presents a detailed description of the derivation of ULD values. This section develops the application of specific ULDs and liquid/solid ratios for the WRSS.

Liquid/Solid Ratios. Table 3.4.1-2 lists the liquid/solid waste ratios used in the WRSS analysis. The basis for the 67/33 ratio in Tank 241-C-106 and the slurry line is the expected maximum solids loading during sluicing. It is anticipated that 33% solids in the slurry will be bounding. The same ratio is assumed for the Tank 241-C-106 headspace and HEPA filters because the contamination in these areas originates from the Tank 241-C-106 aqueous phase.

---

[1]Most of the units involved in this project are measured in English units. For example, the flow rate is 450 gpm. The metric conversion for this is 28.4 L/s, that is, this is a "hard" conversion. The values are reported with enough decimal places so that conversion back to the original units results in little if any error. For example, rounding 28.4 L/s to 28 L/s and converting back to English units would give 443.8 gpm; obviously not the correct value. Therefore, to reduce conversion errors, this practice is followed throughout this document.

This is obviously conservative, because loading the headspace and the HEPA filters would take considerable time at 67/33 and the sluicing operation is of limited duration.

The basis for the 90/10 ratio in Tank 241-AY-102 and the sluice line is the same as the 67/33 ratio assumed for Tank 241-C-106. The reduced solids content is assumed because of the large layer of supernate in Tank 241-AY-102 (approximately 9.14 m [30 ft]), and the operational intention to draw the sluice stream from the top of the tank and inject the slurry stream into the bottom of the tank using a slurry distributor. A lower entrainment of solids in the sluice line (i.e., supernate of Tank 241-AY-102) is needed for the sluicing to be successful.

Composite Unit Liter Doses for Liquids and Solids. DOE-STD-3009-94 requires the Evaluation Basis Accidents to be analyzed in an unmitigated format (without administrative controls and active systems) and, if necessary, a mitigated format (taking control strategies into consideration). As part of this approach, two cases were chosen for waste transfer-related accident scenarios to provide ULDs for the liquids and solids. The first is a bounding case intended to provide a conservative estimate of ULDs. The second is a reasonable case that assumes minimal mixing of Tank 241-AY-102 solids, more representative of conditions expected in the controlled incremental sluicing activity of the WRSS. The terms "bounding" and "reasonable" were chosen based upon radiological considerations, not toxicological.

Bounding Case. For the bounding case (or the case without controls), the liquids ULD is assumed to be composed of 100% Aging Waste Facility (AWF) tank liquids, and the solids ULD is assumed to be composed of 100% AWF tank solids (the AWF ULDs are in Table 3.4.1-3). These ULDs are then used with the liquid/solid ratios found in Table 3.4.1-2 to arrive at the composite ULDs used in the unmitigated transfer accident scenarios (the columns labeled "inhalation bounding case" and "ingestion bounding case" in Table 3.4.1-4). The bounding ULDs used in the accident analysis are comprised entirely of AWF solids and AWF liquids. The ULD for the SST liquids is larger than the ULD for AWF liquids. However, the SST liquids ULD is bounded by the composite ULDs used for this project (Table 3.4.1-4). Since Tank 241-C-106 contains mostly sludge, there is very little SST liquid actually available to contribute to the source term. If the SST liquids ULD is used instead of the AWF liquids in the "bounding" case, the results are within 5%. This would not result in any meaningful changes when comparing to guidelines, setting safety structures, systems and components, or developing controls.

Reasonable Case. For the accident consequences with controls a more reasonable source term assumption was used which is more representative of conditions expected in the controlled incremental sluicing activity of the WRSS. It is assumed that the slurry distributor does not significantly mobilize the aging waste solids. This source term assumption will be confirmed during sluicing by calculating the total solids loading transferred after each batch of 12 hours maximum duration. For the reasonable case (or the case with controls), the liquids ULD is modeled as having a composition consisting of 10% SST liquids and 90% AWF tank liquids. This mixture of ULDs accounts for some of the SST liquids to be entrained during sluicing; however, the vast majority of liquids will be from Tank 241-AY-102, which provides the

sluice stream. The solids ULD for the mitigated accident scenarios is modeled as having a composition consisting of 10% AWF solids and 90% SST solids. This is a reasonable mixture, considering the nature of the operations: SST solids (Tank 241-C-106) are to be sluiced and pumped on top of AWF tank solids (Tank 241-AY-102) in a manner that minimizes mixing and disturbance of the Tank 241-AY-102 solids.

Assuming that 10% of the solids entrained in the sluicing operation are AWF tank solids is considered a reasonable upper bound for selection of ULDs. The representation of Tank 241-AY-102 solids by the AWF solids source term is conservative. The solids in Tank 241-AY-102 are much more benign than the AWF solids source term, which is based on a maximized isotopic distribution from sample data representing all four AWF tanks. For example, the significant inhalation dose contributor to the AWF source term dose is ^{241}Am, which represents 76% of the total inhalation dose. The concentration of ^{241}Am from Table 3.4.1-1 is 1.1 E+10 Bq/L. Data from 241-AY-102 (WHC-SD-WM-ER-454) indicate a ^{241}Am concentration of 9.3 E+08 Bq/L. Because of the conservatism in this term, it is only necessary to confirm the total solids loading after each batch during WRSS operations. Confirmation of a total solids loading in the slurry line of less than 33% will provide reasonable assurance that conditions in the field are bounded by the analysis. Historical data from past sluicing indicates that the actual solids loading in the slurry line will normally be below 10%. As a result, a much lower concentration of solids in the sluice line is necessary for sluicing to be successful.

The ULDs from Table 3.4.1-3 multiplied by the ratios discussed above and weighted by the liquid/solid ratios from Table 3.4.1-2 result in the composite ULDs that are used when reasonable accident consequences are estimated (the columns labeled "inhalation reasonable case" and "ingestion reasonable case" in Table 3.4.1-4). Other controls would also be credited at this time to form the total "mitigated" accident consequences.

3.4.1.2 Toxicological Consequence Calculation Methodology.

3.4.1.2.1 Chemical Inventory.

Gases, Liquids and Solids. The chemical composition of tank waste has been determined based on an evaluation of currently available data that characterizes the tank waste. Similar to the approach used for radionuclides, scatter plots for each of the 24 analytes were generated for both solid and liquid single-shell and double-shell tank samples, and the concentrations were reviewed by an expert panel to determine the maximum valid concentration. The scatter plots, along with the supporting data, procedures, and assumptions are documented in WHC-SD-WM-ER-400, *Tank Waste Source Term Inventory Validation.* WHC-SD-WM-SARR-011 presents a detailed discussion of the development of the chemical inventory. Table 3.4.1-5 provides the chemical constituents used to develop the liquid and solid sum-of-fraction of risk guidelines. Table 3.4.1-6 provides the chemical constituents in the released slurry gases used for the gaseous sum-of-fractions of risk guidelines.

3.4.1.2.2 Exposure Pathways. The toxicological source terms resulting from TWRS accidents comprise liquid and solid particulates and gases. The effects of chemical exposure are evaluated based on the airborne pathway only,

because the toxicological risk guidelines are based on the chemical concentration at the location of the maximum onsite and offsite individuals. Inhalation of chemicals, and exposure to the skin and eyes, were considered in developing the risk guidelines.

3.4.1.2.3 Exposure Calculation Methods. The basic sums-of-fractions used in the analysis are taken from WHC-SD-WM-SARR-011. The application of specific sums-of-fractions for the WRSS is developed in this section.

Following the information provided earlier on the liquid/solid ratios and the bounding and reasonable composites, sums-of-fractions were developed for each frequency category and for the case of a continuous release or a puff release. Table 3.4.1-7 provides the values used in this document. As discussed earlier, the terms "bounding" and "reasonable" were chosen based upon radiological considerations, not toxicological. Even though the toxicological sum-of-fractions labeled "bounding" is less than the sum-of-fractions labeled "reasonable," both were used in the calculations and compared against the risk guidelines. The derivation of unit release sum-of-fraction values are discussed in more detail in WHC-SD-WM-SARR-011.

Table 3.4.1-1. Maximum Sample Activity Concentrations for Tank Farms Waste (based on the 100% inventory bounding activity concentrations).

Nuclide	Activity concentration, Bq/L			
	SST Liq	SST Sol	AWF[a] Liq	AWF[a] Sol
^{14}C	1.0 E+05	1.2 E+05	5.8 E+04	1.0 E+05
^{60}Co[d]	9.5 E+06	4.2 E+08	7.7 E+05	4.9 E+08
^{79}Se	[c]	1.7 E+04	[c]	[c]
^{90}Sr[d]	1.1 E+10	1.6 E+12	5.6 E+09	2.9 E+12
^{90}Y[d]	1.1 E+10	1.6 E+12	5.6 E+09	2.9 E+12
^{99}Tc	1.7 E+07	1.2 E+10	1.2 E+07	2.8 E+08
^{106}Ru	9.9 E+02	7.2 E+04	[c]	[c]
^{125}Sb	3.4 E+04	1.8 E+08	[c]	[c]
^{129}I	1.0 E+04	6.4 E+06	4.4 E+01	4.1 E+06
^{134}Cs	1.2 E+05	1.4 E+06	1.3 E+04	[c]
^{137}Cs[d]	2.2 E+10	1.0 E+11	8.8 E+10	9.8 E+10
^{144}Ce	9.1 E+00	3.4 E+02	[c]	[c]
^{147}Pm	[c]	[c]	[c]	[c]
^{154}Eu[d]	2.4 E+09	5.8 E+09	[c]	1.1 E+10
^{155}Eu	5.9 E+07	5.0 E+06	[c]	[c]
^{237}Np[d]	[c]	3.0 E+07	9.2 E+04	9.9 E+08
^{238}Pu[d]	9.2 E+04	1.9 E+08	2.8 E+03	6.7 E+07
^{239}Pu[b,d]	3.6 E+07	4.4 E+08	1.2 E+06	4.4 E+08
^{241}Pu[d]	2.6 E+08	3.2 E+09	3.4 E+05	1.7 E+09
^{241}Am[d]	4.2 E+07	2.3 E+08	1.1 E+06	1.1 E+10
^{242}Cm	[c]	[c]	[c]	2.0 E+02
^{244}Cm[d]	4.2 E+05	2.3 E+06	1.1 E+04	6.1 E+07

[a] Aging waste facility (AWF) tanks (Tank Farms 241-AY and 241-AZ).
[b] The ^{239}Pu activity concentration also includes ^{240}Pu.
[c] No available data. These radionuclides have a negligible impact on the dose calculations due to their low activity concentrations.
[d] Eleven dominant isotopes.
SST = single-shell tank.

Table 3.4.1-2. Project W-320 Analysis Liquid/Solid Ratios.

Location	% Liquid/% solid
Tank 241-C-106 - Headspace	67/33
- Aqueous phase	67/33
- HEPA filters	67/33
Slurry line	67/33
Tank 241-AY-102 - Headspace	90/10
- Aqueous phase	90/10
- HEPA filters	90/10
Sluice line	90/10

HEPA = high-efficiency particulate air (filter).

Table 3.4.1-3. Unit Liter Doses Used in the Waste Retrieval Sluicing System Analyses.

Waste type	Inhalation, Sv/L	Ingestion, Sv/L
SST liquids	1.1 E+04	0.05
SST solids	2.2 E+05	4.10
AWF tank liquids	1.4 E+03	0.09
AWF tank solids	1.7 E+06	8.10

AWF = aging waste facility.
SST = single-shell tank.

Table 3.4.1-4. Project W-320 Analysis Composite Unit Liter Doses.

Location	% Liquid/ % solid	Inhalation bounding case[a], Sv/L	Inhalation reasonable case[b], Sv/L	Ingestion bounding case[a], Sv-m^3/s-L	Ingestion reasonable case[b], Sv-m^3/s-L
Tank 241-C-106 - Headspace	67/33	5.6 E+05	1.2 E+05	2.73	1.54
- Aqueous phase	67/33	5.6 E+05	1.2 E+05	2.73	1.54
- HEPA filters	67/33	5.6 E+05	1.2 E+05	2.73	1.54
Slurry line	67/33	5.6 E+05	1.2 E+05	2.73	1.54
Tank 241-AY-102 - Headspace	90/10	1.7 E+05	3.9 E+04	0.89	0.53
- Aqueous phase	90/10	1.7 E+05	3.9 E+04	0.89	0.53
- HEPA filters	90/10	1.7 E+05	3.9 E+04	0.89	0.53
Sluice line	90/10	1.7 E+05	3.9 E+04	0.89	0.53

[a]Modeled as 100% AWF liquids and 100% AWF solids.
[b]Modeled as 90% AWF and 10% SST liquids, and 10% AWF and 90% SST solids.
AWF = aging waste facility.
HEPA = high-efficiency particulate air (filter).
SST = single-shell tank.

Table 3.4.1-5. Tank Waste Liquids and Solids Analyte Concentrations (Revised). (2 sheets)

Composites concentrations (g/L)				
Analyte	SST solids	SST liquids	DST/AWF solids	DST/AWF liquids
Ammonia (NH3)	3.3 E-01	5.1 E-01	6.6 E+00	7.1 E+00
Antimony (Sb)	1.5 E+00	3.6 E-03	9.2 E-01	6.4 E-03
Arsenic (As)	1.2 E+00	3.0 E-03	5.7 E+00	1.1 E-02
Barium (Ba)	4.0 E+01	5.3 E-02	5.9 E+00	3.3 E-02
Beryllium (Be)	2.6 E-02	3.0 E-04	2.4 E-01	3.8 E-03
Cadmium (Cd)	1.7 E+00	5.0 E-02	2.6 E+01	7.0 E-02
Calcium (Ca)	5.1 E+01	1.1 E+00	2.6 E+01	1.3 E+00
Cerium (Ce)	9.0 E-01	1.8 E+00	2.6 E+00	5.8 E-02
Chromium (Cr+3)	6.9 E+01	[a]	1.5 E+02	[a]
Cobalt (Co)	5.4 E-01	1.3 E-03	4.4 E+00	8.8 E-03
Cyanide (Cn)	8.2 E+00	5.3 E+00	4.7 E-01	9.1 E-02
Dysprosium (Dy)	[a]	[a]	[a]	[a]
Lanthanum (La)	5.0 E+01	1.9 E-01	3.0 E+01	1.0 E+00
Mercury (Hg)	5.4 E+01	3.1 E-01	1.2 E-01	2.4 E-04
Neodymium (Nd)	2.4 E-01	1.4 E-01	7.0 E+00	5.6 E-03
Oxalate (C2O4)	2.8 E+02	3.7 E+00	2.8 E+02	[a]
Selenium (Se)	3.5 E+00	8.2 E-02	1.9 E+00	2.8 E-01
Sodium Hydroxide (NaOH)	2.1 E+02	2.1 E+02	2.3 E+02	2.1 E+02
Sodium (Na) - NaOH[b]	4.8 E+02	2.1 E+02	3.50 E+02	2.1 E+02
Tellurium (Te)	2.0 E-01	[a]	9.3 E-01	2.7 E-03
Thallium (Tl)	1.2 E+00	3.2 E-03	1.5 E+01	3.7 E-02
Total Organic Carbon (TOC) -Oxalate[b]	1.0 E+02	4.0 E+01	7.5 E+01	4.0 E+01

Table 3.4.1-5. Tank Waste Liquids and Solids Analyte Concentrations (Revised). (2 sheets)

Composites concentrations (g/L)				
Analyte	SST solids	SST liquids	DST/AWF solids	DST/AWF liquids
Uranium (U)	2.8 E+02	1.8 E+00	4.4 E+01	1.1 E+01
Vanadium (V)	3.3 E-02	4.1 E-03	1.2 E-01	2.1 E-03

[a]The best available data indicates the concentrations of this analyte in this composite is not significant.
[b]To avoid counting the same analyte twice, the oxalate concentration was subtracted from the TOC concentration and NaOH was subtracted from the Na concentration. Na(table) = Na(sample)-23/40(NaOH sample data)
AWF = Aging Waste Facility.
DST = double-shell tank.
SST = single-shell tank.

Table 3.4.1-6. Headspace Gas Composite Concentrations.

	Slurry gas composite[a]	
Gas	Concentration (ppmv)	Concentration (mg/m^3)[b]
Acetonitrile	13	21.8
Ammonia	61,300	40,000
Benzene	0.4	1.3
1,3 Butadiene	0.1	0.19
Butanol	58	164
Dodecane	45	296
2-Hexanone	0.8	2.7
Methylene chloride	2	22
Nitrous oxide	67,000	110,000
Propanenitrile	5	11
Tributyl phosphate	1	12
Tridecane	50	390

[a]Based on worst case composites including slurry gas released.
[b]The conversion from ppmv to mg/m^3 assumes a temperature of 38 °C (100 °F) and a pressure of 0.1 MPA (740 torr).

Table 3.4.1-7. Composite Sum-of-Fractions Values Used in Project W-320 Analyses.

Composite[a]	% Liquid/% solid					
	67/33	90/10	67/33	90/10	67/33	90/10
	10^{+0} to 10^{-2}		10^{-2} to 10^{-4}		10^{-4} to 10^{-6}	
Onsite continuous, s/L						
Bounding[b]	1.3 E+04	1.1 E+04	1.6 E+03	1.0 E+03	3.5 E+02	2.5 E+02
Reasonable[c]	1.9 E+04	1.2 E+04	6.8 E+03	2.6 E+03	4.5 E+02	2.8 E+02
Onsite puff, 1/L						
Bounding[b]	3.7 E+03	3.1 E+03	4.7 E+02	3.0 E+02	1.0 E+02	7.2 E+01
Reasonable[c]	5.6 E+03	3.7 E+03	2.0 E+03	7.5 E+02	1.3 E+02	7.9 E+01
Offsite continuous, s/L						
Bounding[b]	6.8 E+01	2.7 E+01	1.1 E+01	9.1 E+00	1.3 E+00	8.4 E-01
Reasonable[c]	4.0 E+01	1.8 E+01	1.6 E+01	1.0 E+01	5.6 E+00	2.1 E+00
Offsite puff, 1/L						
Bounding[b]	2.8 E-01	1.1 E-01	4.2 E-02	3.7 E-02	5.3 E-03	3.4 E-03
Reasonable[c]	1.6 E-01	7.1 E-02	6.2 E-02	4.1 E-02	2.3 E-02	8.6 E-03

[a]The labels "bounding" and "reasonable" were chosen based upon the effect of the mixtures (as defined below) on the radiological ULDs. Even though the toxicological sum-of-fractions labeled "bounding" is less than the sum-of-fractions labeled "reasonable," both were used in the calculations and compared against the risk guidelines.
[b]Modeled as 100% AWF tank liquids and 100% AWF tank solids.
[c]Modeled as 90% AWF tank and 10% SST liquids, and 10% AWF tank and 90% SST solids.

This page intentionally left blank.

3.4.2 Evaluation Basis Accidents

This section presents analyses of evaluation basis accidents identified in Table 3.3.2-1. The evaluation basis accidents are analyzed to identify Safety-Class and Safety-Significant SSCs and TSRs.

The first step in the analytical process is to quantify the consequences and frequency of a postulated accident, assuming the absence of existing preventive or mitigative features. As stated in DOE-STD-3009-94 assuming the absence of preventive or mitigative features "does not require denying the physical design of facility structures, systems, and components." Accordingly, credit is taken for certain design features, primarily those that are passive (e.g., in a waste transfer analysis, it is assumed that a waste transfer line is encased).

Understanding that an "analysis without controls" is an evaluation of a hypothetical condition and not an evaluation of the current operational configuration of a subject facility is important. The purpose of performing the analysis without controls is to establish a baseline risk (i.e., a consequence and frequency) that can be compared to the risk guidelines. This comparison puts the relative importance of the need for controls into perspective and defines the need for further analysis.

Consequences for analyses without controls are calculated by not taking credit for mitigative features (e.g., filtered ventilation pathways) during source term development. Frequencies are based on the absence of controls, not the failure of controls at a defined rate, and are therefore equal to the initiating event frequencies. Based on this approach, the frequency of accidents without controls typically falls in the anticipated category (i.e., $>1 \times 10^{-2}$ to $\leq 1 \times 10^{0}$ per year). This should not be misinterpreted to mean that the consequences of an accident without controls can actually occur at a TWRS facility at an anticipated frequency. As already stated, these are evaluations of hypothetical conditions performed to establish a baseline risk.

Once determined, the consequences and frequency of the accident without controls are compared to the risk guidelines. If the consequences are within both the onsite and offsite guidelines at the applicable frequency, no further quantitative analysis is performed to define controls. In such cases, existing controls are typically defined as providing Defense-in-Depth.

If the risk guidelines are exceeded, additional analysis is required to identify Safety-Class or Safety-Significant SSCs and TSRs. In accordance with WHC-CM-4-46[2], *Safety Analysis Manual*, Safety-Class SSCs are required if the offsite guidelines are exceeded. Safety-Significant SSCs are required if the onsite radiological or toxicological guidelines are exceeded.

---

[2]Refer to Appendix F, "Site-wide Controlled Manual Cross Reference Table," of the BIO for the cross-walk between sitewide controlled manuals (e.g., WHC-CM-X-XX) superseded by FDH procedures (e.g., HNF-PRO-XXX).

Consistent with DOE-STD-3009-94, safety SSCs and TSRs are selected using an iterative process in which credit for preferentially selected controls is taken incrementally and the results are compared with the risk guidelines. The result is an "analysis with controls." In these analyses, consequences and frequencies are determined, assuming that the identified controls function as intended. If the controls are mitigative, the accident frequency remains unchanged relative to the analysis without controls, but consequences are reduced. If the controls are preventative, the means by which the controls prevent the accident (or serve to reduce its frequency) are described, but no consequences are calculated. Although these analyses make the assumption that the controls function as intended, it is recognized that each identified SSC and TSR has an associated failure rate.

Controls were selected using the process and control decision criteria discussed in the BIO main text, Section 5.3.2. When comparing the results of analyses with and without controls to the guidelines, consideration was given to the margin by which the guidelines were met and the reliability of the selected controls. For cases in which the margin was small, the need for additional controls was evaluated. In these evaluations, the degree of conservatism in the consequence calculation was considered. Controls known to be of low reliability were not selected. For cases in which the degree of reliability was uncertain, the need for additional controls was evaluated.

The following sections summarize the findings of the evaluation basis accident analyses. A scenario, source term, consequence analysis, and comparison with guidelines are presented for each evaluation basis accident, both without and with controls. Selected safety structures, systems, and components; TSRs; and Defense-in-Depth controls are identified and defined. Each scenario describes the accident progression that links initiating events with other contributing phenomena and, for the analyses with controls, selected preventive or mitigative controls. For operational accidents, the scenario frequencies were developed from TWRS operating history and applicable equipment failure rates and human error probabilities. The frequencies were developed to a level of detail sufficient to place the event in a two-order of magnitude category as defined by the risk guidelines (i.e., 10^{-4} to 10^{-2}/yr).

Source terms and consequences of the postulated accidents were calculated using the method described in Section 3.4.1. The calculations are deterministic. Realistic, yet conservative, values were selected for each parameter used in the source term calculations. The ULDs, sum-of-fractions, and adverse meteorological conditions used in the consequence calculations also add conservatism. Such a compounding of conservatisms results in consequence values which when combined with the event frequency, can overstate the actual risk. This conservatism, however, is relied on to ensure that associated uncertainties are bounded. The sensitivities of key assumptions used in the consequence calculations are presented following the comparison with guidelines.

3.4.2.1 Criticality. The WRSS criticality accident is an internally initiated operational accident.

3.4.2.1.1 Scenario Development. WHC-SD-W320-CSA-001, *Criticality Safety Assessment of the Tank 241-C-106 Remediation*, concludes that an inadvertent criticality as a result of the activities associated with WRSS is not considered possible for the plutonium concentration determined to be in tank waste and the WRSS process to be applied to the tank waste (WHC-SD-W320-CSA-001). The criticality safety evaluation considered the potential settling behavior of the sludge in both tanks, the behavior of the sludge in pumps used in both tanks, and the resultant mixture of sludges in the receiver tank. The following paragraphs summarize the information found in WHC-SD-W320-CSA-001.

Tank 241-C-106 stores a total mass of plutonium that may be higher than in any other waste storage tank on the Hanford Site. For this reason, Tank 241-C-106 has the potential for a higher localized concentration of plutonium than any other waste tank. The best estimate of the highest concentration of plutonium that could be drawn into the transfer pump was identified, and the impact of discharging the fissile material bearing solids into Tank 241-AY-102 was determined.

Because core samples are mixed and homogenized before analysis, the analysis will not detect high plutonium concentration layers in the sludge. If a high plutonium concentration layer is formed and drawn into the discharge pump housing, the possibility exists that a more favorable geometry with respect to criticality might be achieved. Because the composition of the waste currently stored in Tank 241-C-106 and Tank 241-AY-102 cannot be observed, the estimate of the highest concentration of plutonium that may exist was determined largely by comparing historical records, transfer data, sample data, and computer modeling. Worst-case scenarios were chosen to investigate the concentrating mechanisms and the mass/geometry consequences of distributing the solids in both tanks.

Existing documents agree that waste in Tank 241-C-106 consists of four major waste layers. The plutonium concentration in each layer was estimated from a combination of flowsheet and sample information documented in WHC-MR-0132, *A History of the 200 Area Tank Farms*; LA-UR-94-2657, *Hanford Defined Wastes: Chemical and Radionuclide Compositions*; LA-UR-96-3860, *Hanford Tank Chemical and Radionuclide Inventories of HDW Model Rev. 4*; and WHC-EP-0793, *Estimation of Plutonium in Hanford Site Waste Tanks Based on Historical Records*. A review of sample data stored in the waste characterization data files supported the estimated composition of the waste layers.

A value for the highest plutonium concentration that may exist in a layer in the major waste types was based on a study of more than 260 waste transfers from the Plutonium-Uranium Extraction (PUREX) Plant to Tank 241-AZ-101 (HNF-SD-W151-CSA-001, *CSER 96-014: Criticality Safety of Project W-151, 241-AZ-101 Retrieval System Process Test*). Quantified uncertainties about the analogy between Tank 241-C-106 and Tank 241-AY-102 were not attempted, because empirical data on the plutonium concentrations of thin layers of waste in either tank are not available. The information from Tank 241-AZ-101 was used

because both tanks received plutonium-bearing waste in small batches, the waste in each batch was made alkaline before discharge, the plutonium-bearing solids settled out in layers, and the plutonium precipitate is expected to exhibit the same chemical and physical characteristics in both tanks. The highest plutonium concentration in the solid phase of a transfer from PUREX was estimated to be as much as six times greater than the average concentration of a waste layer. However, the layer of solids from a single transfer is estimated to be only a millimeter thick and will be diluted in the sluicing process.

For Hanford Site waste, the plutonium concentration must be at least 2.6 g Pu/L before criticality becomes possible, even in an unlimited volume of waste. This value is based on a uniform mixture of plutonium and other materials. The waste solids are conservatively assumed to match the Rogers Waste Model (WHC-SD-SQA-CSA-20356, *CSER 92-009: An Analytical Model for Evaluating Subcritical Limits for Waste in Hanford Site Storage Tanks*), which defines a minimum neutron absorber composition, assumes a solids density of 1.2 g/cc, and assumes the water content is optimized. This subcritical limit is set for k_∞ not exceeding 0.95 at a 95% confidence level. After considering the uncertainty, the calculated k_∞ is 0.935.

Potential segregation of plutonium-bearing solid particles is a primary concern with the activities associated with WRSS. Computer simulations estimated the segregation of various particle sizes in the pump well in Tank 241-C-106 and in layers settling in Tank 241-AY-102. The segregation of plutonium was evaluated by extrapolating the data from the models with the assumption that the plutonium existed exclusively as one of the particle sizes modeled (5 to 10 μm, 25 to 35 μm, or 50 to 55 μm). The largest particles (50 to 55 μm) are expected to exhibit the greatest degree of particle segregation from the bottom of the hole (pump well) to the top. The finest particles (5 to 10 μm) are the most uniformly distributed; the medium-sized particles and the plutonium-bearing solids in the conservative representation are expected to exhibit only moderate segregation.

The composition of solids and liquids involved in the retrieval operation will affect the behavior of plutonium in the sludges. Both plutonium solubility and plutonium sorption/desorption on the sludge particles are affected by solid and liquid composition. In Tank 241-AY-102, the average concentration of plutonium in the sludge is a factor of 34 lower than the minimum critical concentration of 2.6 g/L. The mass ratios for Fe/Pu and Mn/Pu are 1070 and 147, respectively. The Fe/Pu and Mn/Pu mass ratios are much greater than the minimum critical mass ratios for these neutron absorbers of 160 and 32, respectively. To reach these minimum criticality limits, the average sludge material must undergo a chemical alteration that concentrates the plutonium 34 times and that separates plutonium from iron and manganese by factors of 6.7 and 4.6, respectively.

Any chemical mechanism for concentrating the plutonium in a waste tank would require transport of plutonium from the solid phase to the aqueous liquid phase, and then to a small volume solid phase. Hence, for the first step, sorbed plutonium must be desorbed into the aqueous phase of the waste mixture. Plutonium sorption on oxyhydroxides is known to be mostly irreversible unless the solution composition in contact with the plutonium is

dramatically altered. This would require (1) the addition of organic or inorganic plutonium complexants, (2) a change in the REDOX potential of the solution by adding oxidants, or (3) acidification of the solution. None of these dramatic changes are part of the scope of the WRSS. A primary parameter for ensuring criticality safety is the mass ratios of insoluble absorbers to plutonium, i.e., Fe and Mn. The transport of soluble solids from the solid phase to the sluicing supernate will not impact the mass ratios of Fe/Pu and Mn/Pu. Even though the plutonium concentration per liter of solids may increase, the mixture will be subcritical regardless of the moderation or quantity.

A hole (e.g., pump well) was sluiced into the Tank 241-C-106 waste so that the immersible pump could be installed. The estimated concentration of plutonium in the slurry inside the hole depends on the initial plutonium concentration and the assigned particle size. The concentration of plutonium in all the solids entering the hole was assigned the high concentration of 0.78 g Pu/L of solids. Even though the medium-sized particles (25 to 35 μm) are considered conservative, the plutonium was assigned the coarsest particle dimension to provide a bounding analysis. The plutonium concentration of the slurry was determined to be 0.55 g Pu/L near the bottom of the hole and 0.12 g Pu/L of slurry near the surface of the hole. The other particle sizes were also evaluated and, as predicted, the plutonium concentration is fairly uniform throughout the hole, ranging from 0.12 g Pu/L to 0.2 g Pu/L of slurry. These concentrations are highly subcritical regardless of the geometry, quantity, or moderation.

Assuming that plutonium exists as the largest particle size (50 to 55 μm), the increase in plutonium concentration caused by settling was investigated. The particle segregation predictions discussed in WHC-SD-WM-TI-757, *Fluid Dynamic Particulate Segregation, Chemical Process, and Natural Ore Analog Discussions that Relate to the Potential for Criticality in Hanford Tanks* indicate that, for the most realistic scenarios, the level of segregation of fissile material from neutron absorbers is roughly a factor of 2.5. To bound these conclusions, the plutonium concentration was assumed to be increased by a factor of three. This results in a plutonium concentration of settled solids at the bottom of the pumpout well of 2.34 g Pu/L. Since the quantity of neutron absorber materials present is over 10 times the amount necessary to preclude a criticality, it is concluded that the waste will remain subcritical.

An operational scenario that was evaluated consists of the slurry pump being shut down for a time sufficient enough to allow all the solids in the hole to settle. The assumed retrieval rate of the slurry pump for this scenario is 18.9 L/s (300 gpm), so the slurry entering the hole was assumed to be 18.9 L/s (300 gpm) with a 30 wt% solids, with a mean residence time in the hole of about 1.5 minutes. If the solids entering the hole have a plutonium concentration of 0.78 g Pu/L, then over 1.5 minutes the hole will contain 306.6 L of solids for a total mass plutonium of 239.1 g. Since the minimum critical mass of plutonium is 520 g in idealized plutonium-water conditions, the solids in the hole will be highly subcritical.

The impact of pulling the layer with the highest estimated plutonium concentration into the slurry pump and transferring it to Tank 241-AY-102 was

investigated. Tank 241-AY-102 currently contains some plutonium-bearing solids, but the solids from Tank 241-C-106 are expected to settle in a relatively flat slab across the top of these solids. This evaluation, which was based on the available data, input, and assumptions, did not identify a mechanism for concentrating or segregating plutonium particles into a concentration or geometry sufficient to allow a criticality accident. These results, together with the fact that the quantity of neutron absorber materials present in both tanks is over 10 times the amount necessary to preclude a criticality, establish a reasonable degree of assurance that a criticality will not occur.

3.4.2.1.2 Source Term Analysis. The postulated WRSS criticality accident is considered to be beyond extremely unlikely. Because the accident is considered beyond extremely unlikely, no source term analysis is performed.

3.4.2.1.3 Consequence Analysis. The postulated WRSS criticality accident is considered to be beyond extremely unlikely. Because the accident is considered beyond extremely unlikely, no consequence analysis is performed.

3.4.2.1.4 Comparison to Guidelines. Because the postulated WRSS criticality accident is considered to be beyond extremely unlikely, no comparison to guidelines is performed.

3.4.2.1.5 Summary of Safety Structures, Systems, and Components and Technical Safety Requirement Controls. Because the criticality accident is considered beyond extremely unlikely, no safety structures, systems, and components are required. A TSR control has been identified, however, to protect key assumptions made in the analysis (Table 3.4.2.1-1). These provide reasonable assurance that the waste will remain subcritical during WRSS operations. These criticality safety conclusions are supported by the following evaluations: WHC-SD-W320-SP-001, *Project W-320 Position Paper - Criticality Concern*, and WHC-SD-W320-CSA-001.

Table 3.4.2.1-1. Technical Safety Requirement Control for Nuclear Criticality Accident.

Control	Safety Function	Comments
Nuclear Criticality Safety Program Key Elements • Establish CPSs based on CSERs • Recovery actions if limits are exceeded • Criticality training program	Prevents the occurrence of a nuclear criticality	None

CPS = Criticality Prevention Specification.
CSER = Criticality Safety Evaluation Report.

This page intentionally left blank.

3.4.2.2 High-Efficiency Particulate Air Filter Failure Due to Exposure to High Pressure or High Temperature. Active ventilation is maintained across single-shell Tank 241-C-106 and double-shell aging waste facility Tank 241-AY-102. Chapter 2.0 describes Tank 241-C-106 and Tank 241-AY-102 ventilation systems and facilities. Potential releases of radioactive and hazardous materials resulting from ventilation system failures are evaluated in the following sections. This differs from Section 5.3.2.2 of the main text of the BIO because the unit liter doses for the material at risk for the WRSS are larger.

In the following two sections, potential releases of radioactive and hazardous materials resulting from High-Efficiency Particulate Air (HEPA) filter failures are evaluated. Section 3.4.2.2.1 presents an accident analysis of HEPA filter failure caused by exposure to high temperatures. Section 3.4.2.2.2 presents a nonmechanistic consequence analysis of HEPA filter failure caused by exposure to high pressure. Section 3.4.2.3 presents the accident analysis for an unfiltered release.

3.4.2.2.1 HEPA Filter Failure - Exposure to High Temperature. High temperatures associated with an external fire (occurring in close proximity to the ventilation system) or the failure of an in-line heater (present in some ventilation systems) could degrade the ventilation system filters. If the integrity of the filters were compromised, the inventory on the filters could be released, followed by an unfiltered release from the tank vapor space if the exhaust fans continue to operate.

Scenario Development. The postulated scenario assumes that a fire occurs in or around a ventilation system, the heat from the fire degrades the filters, a fraction of the inventory of tank waste accumulated on HEPA filters and other ventilation system components is released, and an unfiltered release pathway is established. For actively ventilated systems, the exhaust fans continue to run. For one case, releases from the unfiltered pathway are assumed to continue for up to one year.

Table 3.4.2.2-1 includes the conversion factor for calculation of the one year dose. This duration is in contrast to other potential WRSS accidents that have relatively short-term durations (i.e., minutes or hours). The one-year unfiltered release consequences show the sensitivity of the analysis to assumptions regarding release duration, and were used in conjunction with 12- and 24-hour consequences to select the necessary and sufficient set of controls.

The event frequency for this high temperature accident scenario is anticipated ($> 10^{-2}$ yr^{-1} to $\leq 10^{0}$ yr^{-1}) based on the initiating event frequency for either a heater failure or an external fire. Heaters in the ventilation system have failed in the past, resulting in high temperatures in the exhaust air and some degradation of the filters. The failure of the heater to shut off could create an high temperature situation and cause the failure of the filters in the ventilation system. An external fire around the ventilation system would likely cause a filter degradation, as analyzed here. This event frequency is consistent with the analysis presented in Section 3.4.2.4 that evaluates the consequences of a fire in a contaminated area.

Source Term Analysis. The source term and the unit liter doses for the accident analysis are presented in Section 3.4.1. It is assumed that the contamination on the Tank 241-AY-102 ventilation system filters and in the Tank 241-AY-102 headspace air, during sluicing operations and afterwards, is composed of 90% liquids and 10% solids. The contamination on the Tank 241-C-106 filters and in the Tank 241-C-106 headspace air is composed of 67% liquids and 33% solids. For both tanks, the liquid portion of the aerosol is assumed to be a mix of 10% single-shell tank liquids and 90% aging waste facility liquids. The solid portion of the aerosol is assumed to be a mix of 90% single-shell tank solids and 10% aging waste facility solids. The aerosol in Tank 241-AY-102 has a unit liter dose equal to 3.9×10^{4} Sv/L (3.9×10^{6} rem/L). The aerosol in Tank 241-C-106 has a unit liter dose equal to 1.2×10^{5} Sv/L (1.2×10^{7} rem/L).

The material at risk on the HEPA filters was assumed to have a filter housing contact dose rate of less than or equal to 2 mSv/h (200 mrem/h). Because this is an assumption for filter loading, it requires a TSR control. This contact dose rate is based on operational history and bounds the contact dose rates historically used to replace HEPA filters in the tank farms. HNF-SD-WM-CN-099, *Radiological and Toxicological Analyses of Tank 241-AY-102 and Tank 241-C-106 Ventilation Systems*, uses the contact dose rate and conservative sluicing source term to back calculate the inventory on the filters.

The material at risk on the High-Efficiency Gas Adsorber (HEGA) in the 241-AZ-702 ventilation system is assumed to be 100% of the material that passes through the upstream HEPA filter. A TSR control is required to protect the HEGA filter loading assumption in the analysis. To limit the material that could potentially accumulate on the HEGA filter, it will be replaced before the upstream HEPA filter in the associated filter train has been replaced 20 times, or upon indication of degraded HEPA filter performance.

The High-Efficiency Mist Eliminator (HEME) and High-Efficiency Metal Filter (HEMF) on the 296-C-006 ventilation system were assumed to be flushed to limit the dose rate at the radiation detector to less than or equal to 1 mSv/h (100 mrem/h). The radiation detector is set to alarm at a dose rate of 0.2 mSv/h (20 mrem/h) for purposes of personnel radiation protection, independent of the accident analyses. Since the dose rate is an assumption for filter loading, it requires a TSR control. The HEME for the 241-AZ-702 ventilation system is located in a vault and is not subject to internal or external heat sources. The de-entrainers for the 241-AZ-702 and the 296-P-16 ventilation systems are located in caissons and are not subject to internal or external heat sources. Thus, the HEME and de-entrainers do not contribute to the source term for a high temperature or fire condition.

Based on information presented in DOE-HDBK-3010-94, *Airborne Release Fractions/Rates and Respirable Fractions for Non-reactor Nuclear Facilities*, the respirable release fraction for HEPA filters exposed to high temperature or fire is 1.0×10^{-4}. This release fraction is judged to be suitable for the HEME and HEMF for the 296-C-006 ventilation system. The HEGA contains activated carbon for the adsorption of gases in the tank ventilation airstream. It is assumed that 100% of the HEGA inventory may be released as respirable particulate in the event of a fire.

The unfiltered effective continuous release amount was based on the ventilation flow and calculated by multiplying the nominal volumetric flow rate by a partition factor to convert it to an equivalent outflow of radioactive contaminant. An "agitated tank" partition factor of 1.0×10^{-8} was used. The partition factor cited here is based on experiment results published in RHO-RE-SA-216, *Characterization of Airborne Radionuclide Particulates in Ventilated Liquid Waste Tanks*, for agitated (1.0×10^{-8}) and unagitated (1.0×10^{-10}) tanks under active and passive ventilation.

Consequence Analysis. Appropriate dispersion coefficients and breathing rates are applied to the release amounts to calculate the radiological consequences. These consequence calculations are presented in HNF-SD-WM-CN-099.

The total consequences of the HEPA filter failure event without controls are calculated by adding the consequences resulting from the amount of respirable material released during the HEPA filter failure and the subsequent continuous, unfiltered release following the filter failure. Consequences resulting from the unfiltered release pathway were calculated for 12 hours (onsite receptor) and 24 hours (offsite receptor).

Table 3.4.2.2-1 summarizes the onsite and offsite radiological and toxicological consequences, without controls for releases from failed ventilation system filters. The factor for determination of the one-year unfiltered release consequences is also shown in Table 3.4.2.2-1. The one-year consequences indicate the sensitivity of the analysis to assumptions regarding release duration. Table 3.4.2.2-2 presents the consequences with controls.

Comparison to Guidelines. Table 3.4.2.2-1 presents the radiological and toxicological consequences of the accident scenario without controls. The radiological onsite consequences are above the risk guidelines for each of the ventilation systems except for 296-P-16. Table 3.4.2.2-1 shows that, for the 24-hour unfiltered release, the offsite radiological risk guidelines are not exceeded. The onsite and offsite toxicological risk guidelines also are not exceeded. A control has been developed to lower the consequences of the onsite radiological dose. This TSR control requires the active ventilation to be shut off within 10 minutes of detecting an unfiltered release. The consequences summary in Table 3.4.2.2-2 shows that, in the case with controls, the onsite radiological dose is kept at or below the risk guideline. The offsite radiological dose is below the risk guidelines. Toxicological consequences are assumed to be related to peak concentration and the peak concentration occurs at filter failure, any reduction in unfiltered event duration has no effect on the calculated sum-of-fractions of the risk guidelines.

Summary of Safety Structures, Systems, and Components and Technical Safety Requirement Controls.

Safety Structures, Systems and Components. The radiological dose to the onsite receptor exceeds the risk guideline (see Table 3.4.2.2-1) for each system except the 296-P-16 ventilation system. The continuous air monitor interlocks that shut off the ventilation system within 10 minutes for each of

the ventilation systems on Tank 241-AY-102 and Tank 241-C-106 are selected as safety significant components. The continuous air monitor interlock was also identified as safety significant in Section 5.3.2.2 of the main text of the BIO.

Table 3.4.2.2-3 lists the safety structures, systems, and components selected to lower the consequences of HEPA filter failure. For each safety structure, system, and component the safety function is described and additional comments are provided as appropriate.

Technical Safety Requirement Controls. Table 3.4.2.2-4 lists the TSRs selected to lower the consequences of HEPA filter failure. The TSRs require the CAM to detect high radioactivity caused by HEPA filter failure and the interlock to shut down the ventilation system. The filter loading is protected by requiring periodic testing, monitoring, and filter change out criteria.

Defense-in-Depth. In addition to the identified safety structures, systems, and components and TSRs that are further described in Chapters 4.0 and 5.0, respectively, other engineering and administrative controls provide defense-in-depth protection for the public and workers against the risk of HEPA filter failure. The defense-in-depth controls are identified in Table 3.4.2.2-5. The function of the defense-in-depth controls and additional comments are also included in the table, as appropriate.

3.4.2.2.2 HEPA Filter Failure - Exposure to High Pressure. A pressure differential of 2.5 Kpa (0.36 lb/in^2 [10 in. water gauge]) can fail HEPA filters. Upon failure, the inventory on the filters could be released, followed by an unfiltered release from the tank vapor space. The purpose of this analysis is to provide a common set of reference values to be used in analyzing potential accidents that could raise tank pressures to greater than 2.5 Kpa. These accidents include the following: flammable gas deflagrations (Section 3.4.2.8), organic solvent fire (Section 3.4.2.9), in-tank fuel fire/deflagrations (Section 3.4.2.10), tank bump (Section 3.4.2.11) and liner breach in tank 241-C-106 (Section 3.4.2.12).

Scenario Development. An overpressurization event is postulated to occur within a waste tank. All filters in the ventilation system fail because of the pressure increase, a fraction of the inventory of tank waste accumulated on the filters plus the ventilation system ductwork is released, and an unfiltered release pathway is established. The exhaust fan continues to run, releasing aerosols from the tank headspace. The event frequency is based on the initiating event frequency (e.g., tank bump in-tank fuel fire, etc.). The frequencies associated with the initiating event are discussed in the accident analyses in the sections identified above.

Source Term Analysis. The source term and the unit liter doses for the accident analysis are presented in Section 3.4.1 and discussed in Section 3.4.2.2.1.

The dose rate on the HEME for the 241-AZ-702 ventilation system was assumed to be limited to 8 mSv/h (800 mrem/h). Since this dose rate is an assumption for filter loading, it requires a TSR control. The waste inventory

in the de-entrainers for the 241-AZ-702 and the 296-P-16 ventilation system was calculated based on field survey data. Other vent system component loading assumptions are as discussed in Section 3.4.2.2.1.

Bounding values for fiberglass filters are based on information presented in DOE-HDBK-3010-94, *Airborne Release Fractions/Rates and Respirable Fractions for Nonreactor Nuclear Facilities*, for HEPA filters subjected to explosive stresses (e.g., shock, blast, and venting) or thermal stress. The airborne respirable release fraction used to determine the amount of respirable material released from the filter as a result of crushing is 1.0×10^{-2} (DOE-HDBK-3010-94). The cited airborne respirable release fraction for HEPA filters subjected to explosive stresses is considered applicable and conservative for use in this analysis because the fiberglass filters used in tank farm ventilation systems are similar to those empirically evaluated in DOE-HDBK-3010-94.

Consequence Analysis. Appropriate dispersion coefficients and breathing rates are applied to the release amounts to calculate the radiological consequences. Toxicological consequences are calculated using a frequency dependent sum-of-fractions methodology. This analysis presents sum of fractions values based on the assumption that the event falls in the anticipated frequency category.

Table 3.4.2.2-6 summarizes the onsite and offsite radiological and toxicological consequences, without controls for releases from failed ventilation system filters. The consequences associated with the unfiltered release are presented in Section 3.4.2.2.1.

Comparison to Guidelines. Doses calculated for the HEPA filter overpressurization accident are not related to an event frequency nor compared with guidelines limits. This is because the frequencies of the initiating events (e.g., tank bump, etc.) will differ. Thus, different guidelines will apply to each initiating event, since the guidelines are a function of event frequency. The section describing the specific accident scenario will provide such information.

Summary of Safety Structures, Systems, and Components and Technical Safety Requirements Controls.

Safety Structures, Systems, and Components. The safety structures, systems, and components are defined according to the specific accident scenario. Thus, appropriate safety structures, systems, and components are described in the applicable sections discussing the accidents.

Technical Safety Requirements Controls. Technical Safety Requirements controls are developed for specific accident scenarios. Thus, appropriate controls are described in the applicable sections. A Technical Safety Requirement control is established for filter loading (see Table 3.4.2.2-4).

Defense-in-Depth. Additional controls that provide defense-in-depth are determine based on the specific accident scenario that initiates the event (e.g., tank bump, etc.). Thus, appropriate defense-in-depth controls are described in the sections discussing the specific accidents.

Table 3.4.2.2-1. Summary of Consequences and Frequencies for Filter Failure Due to High Temperature Without Controls.

Ventilation System	CONSEQUENCES								Frequency
	Radiological (Sv)				Toxicological (SOF)				
	Calculated Dose		Risk Guideline		Calculated SOF		Risk Guideline		
	Onsite*	Offsite**	Onsite	Offsite	Onsite	Offsite	Onsite	Offsite	
241-A-702									
Unfiltered Release***	5.8 E-02	8.3 E-05			2.5 E-01	3.4 E-04			
Release from Filter Failure	2.9 E-05	2.5 E-08			7.2 E-03	1.0 E-05			
Total	5.8 E-02	8.3 E-05	5 E-03	1 E-03	2.6 E-01	3.5 E-04	1 (ERPG-1)	1 (PEL-TWA)	Anticipated
241-AZ-702									
Unfiltered Release***	2.9 E-02	4.8 E-05			1.2 E-01	1.7 E-04			
Release from Filter Failure	1.0 E-03	8.8 E-07			2.5 E-01	3.5 E-04			
Total	3.0 E-02	9.6 E-05	5 E-03	1 E-03	3.7 E-01	5.2 E-04	1 (ERPG -1)	1 (PEL-TWA)	Anticipated
296-P-16****									
Unfiltered Release***	3.1 E-03	4.5 E-06			6.3 E-03	1.3 E-05			
Release from Filter Failure	6.5 E-05	5.6 E-08			7.6 E-03	1.6 E-05			
Total	3.2 E-03	4.6 E-06	5 E-03	1 E-03	1.4 E-02	2.9 E-05	1 (ERPG-1)	1 (PEL-TWA)	Anticipated
296-C-006									
Unfiltered Release***	1.6 E-02	2.3 E-05			3.2 E-02	6.8 E-05			
Release from Filter Failure	1.6 E-03	1.3 E-06			1.8 E-01	3.8 E-04			
Total	1.8 E-02	2.4 E-05	5 E -03	1 E-03	2.1 E-01	4.5 E-04	1 (ERPG-1)	1 (PEL TWA)	Anticipated

*12-hour Release
**24-hour Release
***Calculated dose can be converted to one-year doses by multiplying by 15.2 and 9.8 for the onsite and offsite receptors respectively.
****296-P-16 ventilation system is not operated during sluicing operations.

Table 3.4.2.2-2. Summary of Consequences and Frequencies for Filter Failure Due to High Temperature With Controls.

CONSEQUENCES									
Ventilation System	Radiological (Sv)				Toxicological (SOF)				Frequency
	Calculated Dose		Risk Guideline		Calculated SOF		Risk Guideline		
	Onsite*	Offsite**	Onsite	Offsite	Onsite	Offsite	Onsite	Offsite	
241-A-702									
Unfiltered Release	5.0 E-03	4.3 E-06			2.5 E-01	3.4 E-04			
Release from Filter Failure	2.9 E-05	2.5 E-08			7.2 E-03	1.0 E-05			
Total	5.0 E-03	4.3 E-06	5 E-03	1 E-03	2.6 E-01	3.5 E-04	1 (ERPG-1)	1 (PEL-TWA)	Anticipated
241-AZ-702									
Unfiltered Release	2.5 E-03	2.2 E-06			1.2 E-01	1.7 E-04			
Release from Filter Failure	1.0 E-03	8.8 E-07			2.5 E-01	3.5 E-04			
Total	3.5 E-03	3.1 E-06	5 E-03	1 E-03	3.7 E-01	5.2 E-04	1 (ERPG -1)	1 (PEL-TWA)	Anticipated
296-P-16**									
Unfiltered Release	2.7 E-04	2.3 E-07			6.3 E-03	1.3 E-05			
Release from Filter Failure	6.5 E-05	5.6 E-08			7.6 E-03	1.6 E-05			
Total	3.3 E-04	2.9 E-07	5 E-03	1 E-03	1.4 E-02	2.9 E-05	1 (ERPG-1)	1 (PEL-TWA)	Anticipated
296-C-006									
Unfiltered Release	1.4 E-03	1.2 E-06			3.2 E-02	6.8 E-05			
Release from Filter Failure	1.6 E-03	1.3 E-06			1.8 E-01	3.8 E-04			
Total	2.9 E-03	2.5 E-06	5 E -03	1 E-03	2.1 E-01	4.5 E-04	1 (ERPG-1)	1 (PEL TWA)	Anticipated

*10-minute Release
**296-P-16 ventilation system is not operated during sluicing operations.

Table 3.4.2.2-3. Safety Structures, Systems, and Components for High-Efficiency Particulate Air Filter Failure.

Structures, systems, or components	Safety classification		Safety function	Comments
	SC	SS		
Continuous air monitor-interlock on ventilation system	--	X	Prevents the unfiltered release from occurring for more than 10 minutes	Applies to the 241-A-702 and 241-AZ-702 ventilation systems for Tank 241-AY-102 and the 296-C-006 and 296-P-16 ventilation system for Tank 241-C-106.

SC = Safety-Class.
SS = Safety-Significant.

Table 3.4.2.2-4. Technical Safety Requirement Controls for High-Efficiency Particulate Air Filter Failure.

Control	Safety function	Comments
Ventilation Stack CAM Interlock System	Detects the high radioactivity and shuts off ventilation within 10 minutes for Tank 241-C-106 and Tank 241-AY-102 ventilation systems. This prevents the potential unfiltered release from occurring for more than a short period of time.	The 10 minute period for the 296-P-16 ventilation system comes from the existing analysis in the main text of the BIO (Section 5.3.2.2).
HEPA Filter Control with the following key elements: - Periodic radiation survey to monitor HEPA, HEME, and HEMF filter loading - HEPA filter replacement per change-out criteria, i.e., ≤ 2 mSv/h (200 mrem/h) - 241-AZ-702 HEME replacement per change out criteria (8 mSv/h (800 mrem/h) - Periodic radiation survey to verify that 296-C-006 HEME/HEMF dose contribution is ≤ 1 mSv/h (100 mrem/h) at location of radiation detector that monitors the HEME/HEMF - Replacement of the 241-AZ-702 HEGA before the upstream HEPA filter has been replaced 20 times, or upon indication of degraded HEPA filter performance - Aerosol test upon installation (AWF 241-AZ-702) - Periodic aerosol test (AWF 241-AZ-702)	Reduces consequences from a possible HEPA filter failure by limiting the inventory available. HEPA filter efficiency testing protects the HEGA filter (241-AZ-702) source term assumption in the analysis.	Applies to HEPA filters upstream of the HEGA filters.

CAM = continuous air monitor
HEGA = high-efficiency gas adsorber
HEME = high-efficiency mist eliminator
HEMF = high-efficiency metal filter
HEPA = high-efficiency particulate air (filter)

Table 3.4.2.2-5. Defense-In-Depth Controls for High-Efficiency Particulate Air Filter Failure.

Control	Function	Comments
Low Delta P interlock across the HEPA filters on the ventilation system	Shuts off the ventilation system to prevent unfiltered release	Where provided
High Delta P (across the HEPA filters) alarm (remotely, at a manned facility) on the ventilation system	Directs the operator to have filters replaced	Workers trained in responding properly to all alarms
Testing of filters following installation and annually, thereafter	Ensures the operability of the filters on the ventilation system	Workers trained in testing the filters
Record sampler	Provides quantitative release amounts reported to state (a higher-than-normal amount would indicate that an unfiltered release is occurring)	Record samplers tested periodically
Interlock/alarm on heater over temperature	Shuts down heater on high temperature indication to protect ventilation system	Interlock/alarms tested periodically, where provided
Periodic surveillance of HEPA Delta P and continuous air monitor	Ensures the operability of the HEPA filters and the filtration monitoring system	None
HEPA filter replacement typically performed at 1 mSv/h (100 mrem/h)	Limits inventory available for release and limit dose rate to workers in the vicinity of the filters	None
Flushing of HEME and/or HEMF on the 296-C-006 ventilation system performed at dose rate of 0.2 mSv/h (20 mrem/h)	Limits inventory available for release and limit dose rate to workers in the vicinity of the filters.	None

HEPA = high-efficiency particulate air (filter).

Table 3.4.2.2-6. Summary of Consequences for Filter Failure Due to High Pressure Without Controls.

CONSEQUENCES				
Ventilation System	Radiological (Sv)		Toxicological (SOF)	
	Calculated Dose		Calculated Dose	
	Onsite*	Offsite**	Onsite	Offsite
241-A-702 Release from Filter Failure	1.6 E-02	1.4 E-05	4.0 E+00	5.5 E-03
241-AZ-702 Release from Filter Failure	1.2 E-02	1.0 E-05	2.9 E+00	4.1 E-03
296-P-16 Release from Filter Failure	2.7 E-02	2.3 E-05	3.1 E+00	6.6 E-03
296-C-006 Release from Filter Failure	2.6 E-01	2.2 E-04	3.0 E+01	6.4 E-02

Note: These consequences are not compared to risk guidelines since they are components of the consequences of the overpressure accidents
*Does not include unfiltered release
**24 Hour Release

This page intentionally left blank.

3.4.2.3 Unfiltered Release. This accident category refers to various failures of the WRSS ventilation systems (existing or new systems [Chapter 2.0]) not associated with the failure of HEPA filters analyzed in Section 3.4.2.2. The WRSS unfiltered release accidents identified in the hazard analysis can be grouped according to the following phenomena:

- **Unfiltered Flow (296-C-006 ventilation system)** — A duct breach in the recirculation loop of the 296-C-006 ventilation system could result in the forced release of unfiltered tank headspace gases if recirculation fans continue to operate.

- **Loss of Vacuum and Cooling (241-A-702, 241-AZ-702 and 296-P-16 ventilation systems)** — A duct breach or exhaust fan failure occurs, resulting in a loss of tank vacuum and a loss of tank cooling (no recirculation cooling is available).

- **Overheating** — The ventilation system continues to operate, but does not provide sufficient waste cooling (because of excess heat load in the tank, excess fluffing of waste, or high sluice water temperature.

- **High pressure** — Miscellaneous transient or minor high pressure events occur (e.g., air in slurry distributor line entering Tank 241-AY-102, a nitrogen line break in Tank 241-C-106).

- **Excess Vacuum** — Excess vacuum in tank headspace (caused by ventilation control or alignment error) causes the inlet seal loop to fail. The tank vacuum cannot be maintained after the vent system error is corrected, resulting in an unfiltered release out the failed seal loop.

- **Degraded Filtration** — Degraded filtration caused by the generation of excess aerosols in the tank dome occurs (may be caused by damage or excess flow to the slurry distributor or sluicer).

3.4.2.3.1 Scenario Development. Each of the scenarios listed above is discussed below.

Loss of vacuum and high temperature. The loss of vacuum and high temperature release scenarios are related to excess bulk waste temperatures. By definition, these scenarios do not result in waste overheating that is severe enough to cause a tank bump. Once cooling is lost, the tank waste will heat up and eventually begin to boil. The following assumptions are made for the loss-of-flow and overheating scenarios:

- The tank begins to boil immediately (or was already boiling as the result of excess heat load)

- Steam generated by the boiling tank does not condense, but escapes unfiltered from the inlet risers or failed ventilation ductwork

- The tank heat load is 52 kW (177,400 Btu/h), corresponding to the heat load in Tank 241-AY-102 after transfer of the maximum quantity of Tank 241-C-106 solids (Section 3.4.2.11).

Using these assumptions, the steam generation rate is roughly as follows (assuming supernate has properties of water):

(177,400 Btu/h)/(201 Btu/lb) * (26.8 ft^3/lb) = approx. 400 ft^3/min (11.3 m^3/min)

This steam generation rate is roughly one-tenth the flow assumed for the unfiltered ventilation release accident analyzed in Section 3.4.2.2. It is assumed that the partition fraction used for the Section 3.4.2.2 scenario also applies to the boiling tank. Therefore, the consequences of the unfiltered release scenario caused by a loss of ventilation are bounded by the scenario described in Section 3.4.2.2.

High pressure. Limited high pressure events result in small unfiltered releases caused by excess pressure generated in the tank dome from a release of noncondensible gas from one of the tank components. Consequences of these events also are bounded by the high pressure scenarios in Section 3.4.2 such as tank bump (3.4.2.11) and organic solvent fire (3.4.2.9). The total flow from the operating ventilation system with failed HEPA filters is much higher than the flow expected from limited high pressure events.

Excess Vacuum. An excess tank vacuum scenario has no consequences unless the ventilation system is shut down after the high-vacuum event. If the ventilation system is shut down, unfiltered releases could occur as the result of passive breathing. The releases during passive breathing would be much less than the release from an operating ventilation system with failed HEPA filters.

Degraded Filtration. The degraded filtration scenario is caused by high levels of aerosol flow through a tank ventilation system caused by a failure in the slurry distributor or sluicer. The large aerosol load builds up on the filters, degrading performance and resulting in the release of high levels of emissions out the stack of the affected ventilation system. The degraded filters would still provide some mitigation of the release, so the consequences would be bounded by the unfiltered release scenario developed in Section 3.4.2.2.1.

3.4.2.3.2 Source Term Analysis. The unfiltered effective continuous release amounts listed in Section 3.4.2.2 were based on the ventilation flow rate and calculated by multiplying the nominal volumetric flow rate by a partition factor to convert it to an equivalent outflow of radioactive contaminant. An "agitated tank" partition factor of 1.0×10^{-8} was used. The partition factor cited here is based on experiment results published in RHO-RE-SA-216, *Characterization of Airborne Radionuclide Particulates in Ventilated Liquid Waste Tanks*, for agitated (1.0×10^{-8}) and unagitated (1.0×10^{-10}) tanks under active and passive ventilation.

3.4.2.3.3 Consequence Analysis. The consequences for an unfiltered release are developed in Section 3.4.2.2 and summarized in Tables 3.4.2.2-1 and 3.4.2.2-2.

3.4.2.3.4 Comparison with Guidelines. Refer to Tables 3.4.2.2-1 and 3.4.2.2-2.

3.4.2.3.5 Summary of Safety Classification and Technical Safety Requirement Controls. Controls developed for the Section 3.4.2.2 scenario are directed at controlling an unfiltered release by shutting down the ventilation system and limiting the inventory on the HEPA filters. Controls directed at shutdown of the ventilation system also apply to the unfiltered release scenarios discussed in this section. Controls for high pressure scenarios are applied to the initiating event (e.g., temperature controls to prevent a tank bump). One scenario addressed in this section is unique and will require a TSR control. A control is needed to inspect the recirculation duct on the 296-C-006 ventilation system. This inspection will provide indication of a duct breach that could lead to an unfiltered release. Note that minor transient overpressures were considered to have acceptable consequences, and no special controls were specified for these events.

Safety Structures, Systems, and Components. For the overheating scenarios, the safety-related structures, systems, and components determined for the Section 3.4.2.11 tank bump scenario are also credited here. Section 3.4.2.11 determines that the Tank 241-AY-102 annulus ventilation system and the primary ventilation systems for Tanks 241-AY-102 and 241-C-106 are Safety-Class structures, systems, and components. The safety function is to provide adequate cooling to prevent sludge or supernatant from reaching the local saturation temperature. See Section 3.4.2.11 for further discussion of structures, systems, and components related to the Tank 241-AY-102 annulus ventilation system.

The structures, systems, and components developed for the Section 3.4.2.2 HEPA filter failure scenario also apply to the degraded filtration scenarios. For the HEPA filter failure accident scenario, CAM interlocks on the 241-A-702 (if returned to service), 241-AZ-702, 296-P-16, and 296-C-006 ventilation systems were credited as Safety-Significant. The safety function of these components is to shut down the ventilation system and limit the duration of forced release of unfiltered headspace gases. Table 3.4.2.3-1 provides a reference to the applicable sections of Addendum 1 for safety structures, systems, and components.

Technical Safety Requirement Controls. The TSR controls developed for the Section 3.4.2.11 tank bump scenario are also credited for the overheating accident scenarios. The controls for the tank bump scenario establish tank waste temperature limits, ensure operability of tank waste temperature monitoring instrumentation, and ensure that waste transfers do not create in-tank conditions conducive to overheating. See Section 3.4.2.11 for further discussion of TSRs related to temperature control.

The TSRs developed for the Section 3.4.2.2 HEPA filter failure scenario also apply to the degraded filtration scenarios. The CAM interlock operation controls were also credited as a TSR that mitigates accident consequences. See Section 3.4.2.2 for further discussion regarding these controls.

For the unfiltered-flow and loss-of-vacuum scenarios, a ventilation control program requiring daily visual inspection of the aboveground recirculation ventilation ductwork for Tank 241-C-106 (during sluicing) is credited as a TSR that prevents continued operation of a breached duct found during sluicing (Table 3.4.2.3-2). The ventilation control only applies to the operation of the 296-C-006 ventilation system.

Defense-in-Depth. The Defense-in-Depth controls developed for the Section 3.4.2.2 HEPA filter failure scenario also apply to the degraded filtration scenarios. Table 3.4.2.3-3 summarizes these controls.

For the unfiltered-flow and loss-of-vacuum scenarios, an ignition control for limiting vehicle speed was credited as a Defense-in-Depth feature preventing a vehicle accident from damaging ventilation ductwork.

Another possible cause identified in the hazard analysis for unfiltered flow and loss of vacuum was excessive corrosion of the ventilation ductwork caused by aerosols of the new waste introduced into Tank 241-AY-102. A transfer control that includes waste compatibility controls provides Defense-in-Depth against excessive corrosion caused by adding waste to Tank 241-AY-102.

Table 3.4.2.3-1. Safety Structures, Systems, and Components for Unfiltered Releases.

Safety Structures, Systems, and Components in BIO Addendum 1, Sections 3.4.2.2 (HEPA Filter Failure) and 3.4.2.11 (Tamk bump) apply as safety significant for unfiltered releases.

Table 3.4.2.3-2. Technical Safety Requirement Control for Unfiltered Releases.

Control	Safety function	Comments
Ventilation Controls with the following key elements: - Visual inspection of the aboveground ductwork for Tank 241-C-106 every 24 hours during sluicing (only applies to operation of the 296-C-006 ventilation system).	Prevent continued operation of a damaged ventilation duct (during sluicing)	The recirculation ducts could be breached without affecting the rest of the system, therefore an inspection is required.

Note: TSR controls credited in Sections 3.4.2.2 and 3.4.2.11 also apply.

Table 3.4.2.3-3. Defense-in-Depth Controls for Unfiltered Releases.

Control	Safety function	Comments
Transfer controls with the following key element: - Waste compatibility controls	Prevents excessive corrosion of the ductwork caused by the addition of new waste to Tank 241-AY-102	--
Ignition Controls with the following key element: - Speed limit controls	Prevents damage to exposed ductwork	--

This page intentionally left blank.

3.4.2.4 Fire in Contaminated Area. This accident analysis addresses possible WRSS fire scenarios in contaminated areas. The basis for the scenarios includes the hazards analysis found in Section 3.3, Section 5.3.2.3 in the main text of the BIO and in WHC-SD-WM-CN-056, *Fire in a Contaminated Area.* The WHC-SD-WM-CN-056 analysis bounds fires in contaminated areas by investigating vehicle fuel fires, which is the most severe type of fire. The hazards analysis in Section 3.3 identifies flammable gas deflagrations and propylene glycol fires as additional potential fire scenarios.

3.4.2.4.1 Scenario Development. The three basic scenarios considered in the WRSS fire in a contaminated area analysis are a vehicle fuel pool fire, propylene glycol fire, and flammable gas deflagration.

Vehicle Pool Fire. The vehicle fuel pool fire is the same as discussed in Section 5.3.2.3 of the main text of the BIO.

Propylene Glycol Fire. The possibility of a propylene glycol fire in a contaminated area is not a significant hazard. Propylene glycol is present in two pits that are associated with WRSS sluicing operations, the sluice pump pit and the Tank 241-C-106 ventilation system pit. The two chillers are designed to cool the sluice pump associated with Tank 241-AY-102 and to cool air flowing through the Tank 241-C-106 ventilation system. The propylene glycol in the chillers is present as a solution in water (46% propylene glycol and 54% water) and is not significantly volatile or ignitable. The propylene glycol in the chillers presents little hazard to the potential contamination present in a pit and is, therefore, not addressed further in this analysis.

Flammable Gas Deflagration in a Pit. A fire in a contaminated area in Tank 241-AY-102 or Tank 241-C-106 as a result of flammable gas (e.g., hydrogen) generated within the tank is addressed in Section 3.4.2.8.

Accident Frequency Without Controls. See main text of the BIO, Section 5.3.2.3.

Accident Frequency With Controls. See main text of the BIO, Section 5.3.2.3.

3.4.2.4.2 Source Term Analysis. See main text of the BIO, Section 5.3.2.3.

3.4.2.4.3 Consequence Analysis. The radiological consequences for this analysis are presented in Table 3.4.2.4-1. The consequences shown in the table for the fire are taken directly from WHC-SD-WM-CN-056.

The toxicological consequences for this analysis are presented in Table 3.4.2.4-2. The source terms are taken from the source term analysis and the sum-of-fractions values are taken from Section 3.4.1, excluding headspace gases. Note that the source term for the fire scenario is taken from WHC-SD-WM-CN-056.

3.4.2.4.4 Comparison to Guidelines.

Comparison to Guidelines Without Controls. Table 3.4.2.4-3 compares the calculated consequences to the onsite and offsite evaluation guidelines. As can be seen from Table 3.4.2.4-3, all onsite radiological and toxicological guidelines are exceeded; no offsite guidelines are exceeded.

Comparison to Guidelines With Controls. Because the accident scenarios are prevented as well as mitigated in the scenario with controls, no consequences were calculated, so no comparison to guidelines is possible for the scenario with controls.

3.4.2.4.5 Summary of Safety Structures, Systems, and Components and Technical Safety Requirements.

Safety Structures, Systems, and Components. No safety structures, systems and components have been identified for this event.

Technical Safety Requirement Controls. The TSR controls related to this accident are described in Table 3.4.2.4-4. The TSRs that prevent a vehicle fuel fire from occurring are a multiple control strategy for ignition prevention. This strategy requires a program for protection of the vehicle fuel system, physical barriers, and speed limit controls. The strategy also requires emergency plans to mitigate the consequences of a fire.

Defense-in-Depth. Additional controls that provide Defense-in-Depth are described in Table 3.4.2.4-5. These include a fire protection program, a radiation protection program, a contamination control program, vehicle position spotters, tank farm fences, and a vegetation control program.

Table 3.4.2.4-1. Fire in a Contaminated Area Radiological Consequences.

Case	Source term (L)	Inhalation ULD[c] (Sv/L)	Breathing rate[a] (m^3/s)	Onsite		Offsite	
				χ/Q^a_3 (s/m^3)	Dose[b] Sv (rem)	χ/Q^a_3 (s/m^3)	Dose[b,c] Sv (rem)
Pool fire	0.084[a]	5.6 E+05	3.3 E-04	3.41 E-02	5.3 E-01 (5.3 E+01)	2.83 E-05	4.4 E-04 (4.4 E-02)

[a]Taken from WHC-SD-WM-CN-056, 1996, Fire in a Contaminated Area, Rev. 2, Westinghouse Hanford Company, Richland, Washington.
[b]The dose is calculated as (source term)*(ULD)*(breathing rate)*(χ/Q).
[c]Offsite ingestion doses were taken to be negligible and were excluded.
ULD = unit liter dose.

Table 3.4.2.4-2. Fire in a Contaminated Area Toxicological Consequences.

Case	Source term[a] (L)	Onsite		Offsite	
		SOF multiplier[b] (1/L)	SOF[c]	SOF multiplier[b] (1/L)	SOF[c]
Pool fire	0.084[d]	450	38	5.6	0.47

[a]Includes only the respirable source term.
[b]Taken from Section 3.4.1 for the "extremely unlikely" frequency category. The pool fire is treated as continuous and the deflagration and detonation are treated as puffs.
[c]Sum-of-fractions of risk guidelines calculated as (source term)*(SOF multiplier).
[d]Taken from WHC-SD-WM-CN-056, 1996, Fire in a Contaminated Area, Rev. 2, Westinghouse Hanford Company, Richland, Washington.
SOF = sum-of-fractions.

Table 3.4.2.4-3. Summary of Consequences and Frequencies for Fire in a Contaminated Area Without Controls.

Accident	Consequences								Frequency
	Radiological, Sv (rem)				Toxicological				
	Onsite		Offsite		Onsite		Offsite		
	Calculated dose	Risk guideline	Calculated dose	Risk guideline	Calculated SOF	Risk guideline	Calculated SOF	Risk guideline	
Pool fire	5.3 E-01 (5.3 E+01)	1.0 E-01 (1.0 E+01)	4.4 E-04 (4.4 E-02)	4.0 E-02 (4.0 E+00)	38	1	0.47	1	Extremely Unlikely

SOF = sum-of-fractions.

Table 3.4.2.4-4. Technical Safety Requirement Controls for Fire in Contaminated Area.

Control	Safety function	Comments
Ignition Controls with the following key elements: - Vehicle access within the tank farms shall be limited to vehicles whose fuel systems are protected from damage caused by potential collisions with tank structures - Physical barriers shall restrict vehicle access to those aboveground structures outside of tank farm boundaries that can direct liquids into waste tanks. Only vehicles with protected fuel systems will be allowed within barriers - Speed limit controls	Prevent vehicle fuel system damage in the event of collisions with tank structures within the tank farms. Outside the tank farms where vehicle access can not be controlled, prevent vehicle access to tank structures	--
Emergency Preparedness with the following key element: - Response procedures for fire in contaminated area	Mitigates the consequences of a fire in contaminated area	--

Table 3.4.2.4-5. Defense-In-Depth Controls for Potential Fire in Contaminated Area.

Control	Safety function	Comments
Fire protection program	Fire prevention	Program contains a number of provisions that would prevent fires in a pit from causes other than ruptured fuel tanks
Radiation protection program	Facility workers will use masks when working in areas with the potential for airborne contamination	Provides protection for facility workers that would be closest to the accident location
Contamination control program	Survey and cleanup of areas with loose surface contamination	For the scenario analyzed, would reduce the concentration and quantity of contamination in the valve pit
Vehicle positioning spotters	Spotters provide additional level of control in positioning cranes/vehicles	Reduces probability of analyzed accident
Tank farm fences	Provide line of demarcation within which Ignition Control Program key elements related to vehicle fuel systems must be met	Fence gates are typically closed and locked
Vegetation control program	Prevents range fires from impacting Tank Farm facilities	None

3.4.2.5 Caustic Spray Leak. Sodium hydroxide is used to adjust the concentration of hydroxide (OH-) ions in the waste tank contents to minimize corrosion. A pressurized spray leak of caustic solution during a transfer to a waste tank could disperse a significant amount of respirable sodium hydroxide particles. These particles could cause potentially significant onsite or offsite toxicological consequences.

Because quantitative analysis does not exist for overpressurization of a sodium hydroxide carrying cargo tank, qualitative results are presented here and are used as the basis for deriving controls. The qualitative analysis of a pressurized cargo tank rupture and spray leak is presented in HNF-SD-WM-CN-065, *Consequence Analysis of NaOH Solution Spray Release During Addition to Waste Tank*. The main text of the BIO will incorporate this analysis in a future revision. No radioactive materials are associated with this event.

3.4.2.5.1 Scenario Development.

Sequence of Events. Sodium hydroxide is either procured from an offsite vendor and transported in tanker trucks to the tank farms or mixed onsite. The caustic solution may be as strong as 19 M (50 wt%). The solution may be transferred into a given waste tank using a mixer pump or transferred directly through an available riser.

The initiating event is assumed to be a overpressurization of a sodium hydroxide cargo tank. In the worst case scenario, this overpressurization causes the tank to rupture, spraying its contents. Other possible initiators of a spray leak include a crack developing in the cargo tankers and the transfer piping. However, the consequences of the rupture case are assumed to be bounding.

It is important to note that the system analyzed here consists of a pressurized cargo tank, fittings, and flexible polyethylene hose sections. The volume of the analyzed cargo tank is 26,500 L (7,000 gal). This will be the system used to add sodium hydroxide during WRSS operations. The scenario analyzed in Section 5.3.2.9 of the main text of the BIO is another possible system of caustic addition. The main text scenario involves a 208 L (55 gal) drum, a pump, hard piping, and hose.

Accident Scenario Without Controls. For the accident scenario without controls, the sodium hydroxide cargo tank was postulated to rupture after becoming overpressurized, forming an atomizing spray. The pressure inside the cargo tank is assumed to be 862 kPa (125 psi), based on the maximum pressure attainable by the plant air supply, which could be used to pressurize the tank. The vendor could also supply an air compressor, which is assumed to provide less than 862 kPa (125 psi). A rupture of the tanker truck caused by a failure during overpressure was also analyzed.

Accident Frequency Without Controls. The frequency without controls of a cargo tank rupture has not yet been ascertained.

Accident Scenario With Controls. The controls selected for the caustic spray leak are preventive as well as mitigative and are presented in

Section 3.4.2.5.4. These controls prevent overpressurization and leaks, therefore no release scenario is postulated for the case with controls.

Accident Frequency With Controls. With the controls identified for the caustic spray leak in Section 3.4.2.5.4, the accident is prevented although controls are also specified to mitigate the accident.

3.4.2.5.2 Source Term Analysis.

Accident Source Term Without Controls. The main text of the BIO (Section 5.3.2.9) presents the results of the analysis of a spray leak in caustic transfer piping (of the skid system) caused by a crack with a minimum depth of 2.77 mm (0.109 in.) and a maximum length of 25 mm (1 in.). The results of this analysis can be found in HNF-SD-WM-CN-065. The SPRAY Code, Version 3.0, was used to calculate leak rates and small particle fractions for an assumed break in the liquid containment boundary. The crack width was optimized to produce the highest respirable particle fraction using the SPRAY Code (WHC-SD-GN-SWD-200007, *A Model for Predicting Respirable Releases from Pressurized Leaks*).

Particles less than about 10 μm tend to remain suspended in the air for long distances, but particles larger than 10 μm released from a non-elevated source tend to fall out within the first 50 to 100 m (164 to 328 ft) of travel. The size of the liquid particles will decrease in transit by evaporation of the liquid component. Ultimately, only smaller particles of the solid material previously in liquid solution will remain. Therefore, the small particle fraction of the spray release, which is a function of solution concentration and crack width, was determined using the initial diameter of a solution particle (with the given solid fraction) that will shrink to 10 μm by evaporation. The leak rate and atomization efficiency increase with decreasing viscosity and increasing temperature. Therefore, the high end of the temperature range for this liquid (50 °C [122 °F]) was assumed.

A parametric study was then performed using the SPRAY Code to determine the worst case solution concentration within a range of 5% to 50% NaOH to be used for tank additions. The worst case small particle release rate was calculated over a range of NaOH concentrations. These calculations accounted for variation in viscosity and density with concentration. Results of the calculations indicated that a 12% solution was optimal for small particle generation. For this case, the unevaporated particle size range was less than or equal to 20.3 μm and the respirable NaOH release rate was 1.68 g/s. Standard roughness and flow parameters for steel pipe were assumed. For the cases where critical flow developed in the crack, friction factors for laminar flow were assumed for conservatism.

The source term for this accident has been analyzed qualitatively in HNF-SD-WM-CN-065. This analysis shows that a crack in the cargo truck can result in caustic concentrations at the offsite receptor that exceed the risk guidelines. The analysis for tank rupture also shows that caustic concentrations at the offsite receptor can exceed the risk guidelines. In addition, if the offsite guidelines are exceeded, so are onsite guidelines. The caustic spray leak scenario frequency is anticipated (HNF-SD-WM-CN-065).

Accident Source Term with Controls. No source term with controls was derived because the accident controls are preventive as well as mitigative.

3.4.2.5.3 Consequence Analysis. The onsite and offsite toxicological exposures in HNF-SD-WM-CN-065 were determined qualitatively.

Analysis Results.

Consequences Without Controls. The toxicological consequences of the rupture release are qualitatively presented in Table 3.4.2.5-1. A quantitative analysis has not yet been performed (HNF-SD-WM-CN-065).

Consequences With Controls. No consequences with controls were derived because the accident controls are preventive as well as mitigative.

3.4.2.5.4 Comparison to Guidelines. Table 3.4.2.5-1 compares caustic spray leak consequences to risk guidelines. The criterion is exceeded at the onsite receptor location and the offsite receptor location.

3.4.2.5.5 Summary of Safety Structures, Systems, and Components and Technical Safety Requirement Controls.

Safety Structures, Systems, and Components. No safety structures, systems, and components are required.

Technical Safety Requirement Controls. The TSR controls for the caustic spray leak accident analysis are listed in Table 3.4.2.5-2.

Defense-in-Depth. Defense-in-Depth controls for the caustic spray leak accident are listed in Table 3.4.2.5-3.

Table 3.4.2.5-1. Qualitative Consequences of a Caustic Spray Leak Assuming No Controls.

Accident	Consequences								Frequency
	Radiological, Sv (rem)				Toxicological				
	Onsite		Offsite		Onsite		Offsite		
	Calculated dose	Risk guideline	Calculated dose	Risk guideline	Calculated SOF	Risk guideline	Calculated SOF	Risk guideline	
Caustic Spray Leak from the Tanker Truck	N/A	N/A	N/A	N/A	Above guidelines	1	Above guidelines	1	Anticipated
Caustic Release from Rupture of the Tanker Truck	N/A	N/A	N/A	N/A	Above guidelines	1	Above guidelines	1	Anticipated

N/A = not applicable.
SOF = sum-of-fractions.

Table 3.4.2.5-2. Technical Safety Requirement Control* for Caustic Spray Leak.

Control	Safety function	Comments
Caustic Transfer Controls with the following key elements:		
- Plastic sleeving around delivery piping	Prevents or mitigates the consequences of a spray leak	Sleeving shall have a thickness ≥ 4 mil
- Caustic delivery system pressure ≤ 125 psig or below sodium hydroxide cargo tanks specified maximum allowable operating pressure, whichever is lower	Reduces the consequences of a leak by reducing the leak rate. Ensures that sodium hydroxide tanks will not be subject to overpressurization	Overpressurization of sodium hydroxide cargo tanks could result in tank rupture
- Steel pipe shall be Schedule 10 or heavier wall thickness; polyethylene hose or other delivery pipe shall be designed for appropriate pressure delivery. Caustic transfer piping will have a wall thickness of ≥ 0.109 in	Prevents or mitigates the consequences of a leak by reducing the leak rate	A thinner walled pipe would have worse consequences
- Vendors will be required to provide documentation that the sodium hydroxide cargo tanks to be used for caustic transfers meet Department of Transportation Specifications	Ensures that tank relief valves are operable, ensures that minimum wall thickness is at least 0.100 in., and provides for inspections of cargo tanks. This prevents or mitigates release from cracks or ruptures of the tank	
- Traffic barriers shall surround the cargo tank (e.g., traffic cones or stanchions and chains)	Reduces the probability of a caustic leak	

*Note: Controls analyzed are for a skid system and for a cargo tank system, as applicable (e.g., the cargo tank truck does not use steel pipe).

Table 3.4.2.5-3. Defense-in-Depth Controls for Caustic Spray Leaks.

Control	Safety function	Comments
Operator training	Prevents or minimizes the effects of a leak	The operating procedures contain a number of checks to ensure that piping connections are secure and equipment functioning properly. Regular instrument checks during transfers minimize consequences of a leak
TWRS Hazardous Material Protection Program	Prevents or minimizes consequences to a worker from a hazardous material release	The TWRS HMP program is a collection of industrial hygiene programs designed to protect workers against the type and magnitude of hazards identified in Chapter 5.0, "Safety Analysis." See Chapter 4.0, "Safety Management," for a discussion of the HMP program
Emergency response plans and procedures	Mitigates the consequences of leaks or spills	Emergency response plans and procedures are in place to respond to and mitigate the consequences of accidental leaks or spills of hazardous material. See Chapter 4.0, "Safety Management," for a discussion of the emergency preparedness program

WHC-SD-WM-CN-065, 1997, Consequence Analysis of a NaOH Solution Spray Release During Addition to Waste Tank, Rev. 1, Westinghouse Hanford Company, Richland, Washington.
HMP = Hazardous Material Protection.
TWRS = Tank Waste Remediation System.

3.4.2.6 **Tank Failure Caused by Excessive Loads.** This accident category refers to structural failures of Tank 241-AY-102 or Tank 241-C-106 caused by the excess loads discussed in the following paragraphs. The load drop accident scenario analyzed here is analogous to the scenario analyzed in Section 5.3.2.13 of the main text of the BIO. It is argued that the mixer pump used in the main text load drop analysis causes more damage than the heavy equipment specific to WRSS. However, the main text consequence analysis was modified to account for the possibility that aging waste solids could be aerosolized in the hypothetical accident. The main text analyzed consequences of a load drop using non-AWF double-shell tank solids.

Load Drop. A load drop could occur during a crane lift of heavy equipment that is being installed or removed from Tank 241-AY-102 or Tank 241-C-106. The following equipment is of concern for the WRSS:

- Concrete cover blocks (several types, all under 14,514 kg [32,000 lb])
- Two booster pumps (1,814 kg [4,000 lb] each)
- One sluicer assembly (771 kg [1,700 lb])
- One winch pump assembly (3,016 kg [6,650 lb]).

The consequences of dropping these pieces of equipment are bounded by the consequences of dropping the 101-SY mixer pump (9,100 kg [20,000 lb]) vertically into a tank pump pit from the maximum crane lift height (for further details on the mixer pump drop, see discussion in the scenario development section). The mixer pump represents the combination of large total mass with a small cross-sectional area of impact that would produce maximum damage to the tank dome. Concrete cover blocks dropped from a similar height would not penetrate the dome because of their large cross-sectional area (see further discussion in the scenario development section). The booster pumps also have a large cross-sectional area and would cause much less damage than the cover blocks because they weigh much less. The sluicer assembly and winch pump assembly have cross-sectional areas comparable to the mixer pump, but have much less mass and would generate a smaller source term even if it is assumed that they could penetrate the tank dome if dropped.

3.4.2.6.1 **Scenario Development.** Load drops will cause localized structural damage to a riser pit floor and the tank dome if drop heights are great enough and if the items dropped are rigid enough. The failure mode for equipment drops at heights > 6.1 m (20 ft) is the result of excess local shear stresses in the dome. A load drop event can occur as a result of the following:

- Drop of the load as the result of cable failure, brake failure, or operator error
- Drop of the boom (with or without the load) as the result of boom or boom cable failure.

The load can drop onto the soil cover over Tank 241-AY-102 or Tank 241-C-106, onto the pits over the tank, primarily the pump pit, or onto a riser. The worst case is a load drop into a pump pit because, of all the possible drop locations that could result in the load reaching the tank waste, the pump pit is structurally the weakest.

All load drop accidents are bounded by the consequences of a mixer pump drop. Although a mixer pump will not be used for WRSS operations, a mixer pump drop was used in the analysis to provide an upper bound on the consequences of dropping the heavy equipment that will be used in the project sluicing operations. The WRSS accident scenario assumes that a 9,100 kg (20,000 lb) mixer pump (the weight of the lifting hardware is ignored) is dropped into the pump pit of Tank 241-AY-102 or Tank 241-C-106. Although some cover blocks are heavier than mixer pumps, the cover block drop height necessary to damage the dome is at least 10 times greater (WHC-SD-WM-TI-775, *Structural Assessment of Accident Loads*) than for a mixer pump. The factor of 10 is directly related to the impact area. The impact area for the cover block is 0.13 m^2 (200 in^2); for the pump the impact area is 0.023 m^2 (36 in^2). Another reason the mixer pump drop is considered to be the worst case drop is the orientation of the equipment during the lift. The pump would be lifted so that the axis is vertical. The cover block would be lifted flat.

Accident Scenario Without Controls. See main text of the BIO, Section 5.3.2.13.

Accident Frequency Without Controls. Because the pumps and heavy equipment assemblies are already installed in Tank 241-AY-102 and Tank 241-C-106, pump replacement is not planned during WRSS operations unless a pump unit fails during sluicing operations. However, as a worst case or upper bound on the load drop frequency, it is assumed that both the sluicer and winch pump assemblies must be replaced annually because of operator error or a delay in the start of the WRSS operations.

Installation of large loads in the tank requires several critical lifts. Replacing a pump assembly requires removal of the cover blocks, booster pump, and sluicer or winch pump assembly, then replacement with the new parts. A drop of the cover blocks or booster pumps will not penetrate the tank dome because of the relatively large surface area of impact. This leaves four critical lifts that may penetrate the tank dome during replacement of the sluicer and winch pump assemblies. Thus, the upper bound on the dome penetration frequency (per year) is four times the probability of dropping an object during a critical lift.

The frequency of a heavy load drop for the WRSS operations is in the "unlikely" category, as in Section 5.3.2.13 of the main BIO text.

Accident Scenario With Controls. See main text of the BIO, Section 5.3.2.13.

Accident Frequency With Controls. See main text of the BIO, Section 5.3.2.13.

3.4.2.6.2 Source Term Analysis. This section quantifies the material released should a load drop occur.

Source Term Without Controls. As discussed in the main text of the BIO, the total waste made respirable is 0.51 L (0.126 gal). After accounting for the amount that is suspended and the amount that is removed from the tank, a total of 0.005 L of respirable material is released.

Source Term With Controls. Because the accident is prevented with controls in place, there is no source term with controls.

3.4.2.6.3 Consequence Analysis. The consequences of the load drop scenario were calculated in accordance with the methodology presented in Section 3.4.1.

The radiological consequences are based on the unit liter dose for aging waste facility tank solids. As previously discussed, use of the dry salt cake source term with the unit liter dose for aging waste facility tank solids does not realistically represent an object drop into sludge or slurry in Tank 241-AY-102 or Tank 241-C-106. Rather, the aging waste facility tank unit liter dose source term should be interpreted as an upper bound on the more realistic source term from a drop into liquid.

Consequences Without Controls. Table 3.4.2.6-1 summarizes the radiological and toxicological consequences of the load drop scenario without controls. The doses were calculated using the bounding χ/Q' values.

$$EDE_{onsite} = (0.005\ L)\left(3.41 \times 10^{-2}\ \frac{s}{m^3}\right)\left(3.3 \times 10^{-4}\ \frac{m^3}{s}\right)\left(1.7 \times 10^{6}\ \frac{Sv}{L}\right)$$

$$= 0.096\ Sv$$

$$\approx 0.1\ Sv$$

$$EDE_{offsite} = (0.005\ L)\left(2.83 \times 10^{-5}\ \frac{s}{m^3}\right)\left(3.3 \times 10^{-4}\ \frac{m^3}{s}\right)\left(1.7 \times 10^{6}\ \frac{Sv}{L}\right)$$

$$+ (0.005\ L)\left(2.83 \times 10^{-5}\ \frac{s}{m^3}\right)\left(8.1\ \frac{Sv \cdot m^3}{s \cdot L}\right)$$

$$= 8.1 \times 10^{-5}\ Sv$$

The "all solids" toxicological sum-of-fractions was chosen to bound the toxicological consequences (see Section 5.3.1 of the main text of the BIO). The accident happens in a short period of time, so the sum-of-fractions for a puff release is assumed. The frequency of this event is in the "unlikely" category as discussed above.

$$T_{onsite} = (0.005\ L)\left(6.6 \times 10^{3}\ \frac{1}{L}\right)$$

$$= 33$$

$$T_{offsite} = (0.005\ L)\left(1.7 \times 10^{-7}\ \frac{1}{L}\right)$$

$$= 8.5 \times 10^{-4}$$

Consequences With Controls. Because the accident is prevented with controls, there are no consequences with controls.

Sensitivity of the Results to Key Parameters and Assumptions. See BIO, Section 5.3.2.13.

3.4.2.6.4 Comparison with Guidelines. The onsite radiological consequences without controls of 0.1 Sv (10 rem) is above the onsite evaluation guidelines of 0.05 Sv (5 rem) for an "unlikely" event (Table 3.4.2.6-1). The offsite guidelines of 0.005 Sv (0.5 rem) are easily met. The onsite toxicological consequences without controls of 33 exceed the onsite guidelines of 1.0. The offsite guidelines are met.

With controls, the event is prevented; therefore no consequences are calculated.

3.4.2.6.5 Summary of Safety Structures, Systems, and Components and Technical Safety Requirement Controls. The following paragraphs present safety classification and TSR controls for the load drop accident. They also cover Safety-Class SSCs and TSR controls for uniform and concentrated load scenarios.

Safety Structures, Systems, and Components. No Safety-Class or Safety-Significant equipment is specified for this accident. Instead, the controls focus on TSRs that prevent the accident.

Technical Safety Requirement Controls. Table 3.4.2.6-2 summarizes the TSR controls. The TSR control chosen for the load drop event is an administrative control that states the height to which a load is raised shall not exceed the critical height of 6.1 m (20 ft) above the soil at grade or the floor of the pits. Justification for a 6.1 m (20 ft) drop is provided in WHC-SD-WM-TI-782, *Load Drop Evaluation*. The pit floors are chosen because the cover blocks over the pits do not provide much resistance to a load drop. The numerical value of the critical height is based on the lack of penetration of the worst case hypothetical load (the Tank 241-SY-101 mixer pump) dropped onto the weakest point that could result in dome penetration (the pump pit). Details are in the load drop calculations presented in WHC-SD-WM-TI-782. Load drops from the critical height will not result in penetration of the dome.

Another element of the Technical Safety Requirement requires use of DOE/RL-92-36, *Hanford Site Hoisting and Rigging Manual*, which provides guidelines for inspection, personnel qualification, training, equipment to be used, and critical lift procedures for lifts over all TWRS facilities.

It has previously been demonstrated that dome or roof collapse caused by excessive loads is not credible. However, because different cranes can be brought to the Site, a control is required to protect the assumption. The maximum loads above which the dome or roof could fail are presented in WHC-SD-WM-TI-775 and WHC-SD-TWR-RPT-002, *Structural Integrity and Potential Failure Modes of the Hanford High-Level Waste Tanks.* The Technical Safety Requirement load limits must be set well below the failure loads because the stresses caused by the loads must meet code allowables.

The concentrated load shall not exceed 90,800 kg (100 tons) over Tank 241-AY-102 or Tank 241-C-106 either permanently or temporarily (WHC-SD-WM-TI-775).

Defense-in-Depth. Defense-in-Depth features are those operational practices that also serve to prevent an accident or mitigate its consequences (Table 3.4.2.6-3). The load drop event has six Defense-in-Depth features including a radiation protection program, a facility Health and Safety Plan, a Job Control System, operator training, operating procedures, and emergency response plans/procedures.

Table 3.4.2.6-1. Consequences of a Load Drop Assuming No Controls.

Accident	Consequences								Frequency
	Radiological, Sv (rem)				Toxicological				
	Onsite		Offsite		Onsite		Offsite		
	Calculated dose	Risk guideline	Calculated dose	Risk guideline	Calculated SOF	Risk guideline	Calculated SOF	Risk guideline	
Load Drop Without Controls	1.0 E-01 (1.0 E+01)	5.0 E-02 (5.0 E+00)	8.1 E-05 (8.1 E-03)	5.0 E-03 (5.0 E-01)	33	1	0.00085	1	Unlikely

SOF = sum-of-fractions.

Table 3.4.2.6-2. Technical Safety Requirement Control for Load Drops.

Control	Safety function	Comment
Dome Loading Control with the following key elements:		Critical lifts are defined in the Hanford Site Hoisting and Rigging Manual
- For critical lifts over SSTs and DSTs:		
• Hanford Site Hoisting and Rigging Manual requirements shall be met	Prevents load drop accidents (i.e., reduces the frequency of load drops)	The cover blocks offer little resistance to load drops due to their failure at low bending moments and are not considered in determining compliance with the (6.1 m) 20 ft limit. The (6.1 m) 20 ft limit considers the largest mixer pump (9,100 kg [20,000 lbs]) and cover blocks as the limiting loads
• Height of the bottom of the load shall not exceed 6.1 m (20 ft) over the soil or pit floor	Limits load handling over a tank so that in the event the load is dropped the tank dome would not collapse	
- External load on the tank dome:	Prevents exceeding external loads that may cause tank dome failure	
• SST uniform load shall not be modified		
• DST uniform loads shall be below 2.5 m (8.3 ft) of soil (AY and AZ tank farms, and 2.3 m (7.5 ft) of soil (SY, AW, AN, AP tank farms)		
• 100 series SST and DST concentrated load shall not exceed 90,800 kg (100 tons) on a temporary or permanent basis		

DOE/RL-92-36, 1996, Hanford Site Hoisting and Rigging Manual, U.S. Department of Energy, Richland Operations Office, Richland, Washington.

DST = double-shell tank.
SST = single-shell tank.

Table 3.4.2.6-3. Defense-in-Depth Controls for Load Drops.

Control	Safety function	Comments
A Radiation Protection Program will be established and implemented consistent with applicable procedures	Provides radiological controls to protect onsite and facility workers	--
A facility Health and Safety Plan will be established and implemented consistent with applicable procedures	Provides for worker protection by restricting activities in high winds	--
A Job Control System will be established and implemented consistent with applicable procedures	Provides assurance that work activities including appropriate controls are planned and approved. This includes requirements to place load absorber material around the riser when very heavy loads are installed	--
Operator Training is required prior to performance of activities affecting safety	Provides assurance that operation of facilities are by Hanford Site experienced crews with specific training in these activities	--
Operating procedures will be established and implemented for activities affecting safety	Provides assurance that operations are performed to approved plant procedures	--
Emergency Response Plan/Procedures will be established and implemented consistent with applicable procedures	Provides assurance that plans and procedures are in place to respond to emergency conditions	--

3.4.2.7 Tank Failure Caused by Excessive Vacuum. This accident category refers to structural failures of Tank 241-AY-102 or Tank 241-C-106 caused by excess vacuum in the tank headspace. The excess vacuum hazards discussed are analogous to those analyzed in Section 5.3.2.13 of the main text of the BIO. Excess vacuum events specific to the WRSS have been identified in the WRSS hazard analysis. Special consideration has been given to the new ventilation systems that will be installed in the tanks before the WRSS starts up. This accident scenario is bounded by the analysis in Section 3.4.2.6.

Tank failure refers to loads or conditions that could result in dome or roof collapse; dome or roof settling (wall failure); or dome, roof, wall, or bottom perforation that can result in the release of radioactive waste to the environment through openings in the walls, the bottom, or the dome of a tank. The following accidents were identified in the WRSS hazard analysis as those that could lead to structural failure as the result of excessive vacuum in the tank headspace (Section 3.2).

- Fan controller failure or operator error increases fan speed
- Inlet ventilation damper accidentally closes
- Inlet ventilation plugged by ice (as the result of chiller malfunction or weather) or ash
- Incorrect ventilation system alignment reduces inflow
- Cold water spray into tank causes condensation in headspace
- Cool down of tank headspace after an in-tank fire.

The analysis in WHC-SD-TWR-RPT-002 for high internal vacuum states that single-shell and double-shell tanks can withstand -55 kPa (-8 psig) of vacuum. Vacuum due to fire, existing ventilation system failure (i.e., exhaust fan with all flow paths blocked), and vacuum cooling the dome space due to water spray cannot reach -55 kPa (-8 psig).

The new ventilation systems that will be installed in Tank 241-AY-102 and Tank 241-C-106 before startup of WRSS sluicing operations also cannot create a vacuum approaching -55 kPa (-8 psig). Assuming that all infiltration pathways into the tank headspace are blocked, the greatest vacuum that can be created with the new exhaust fans running at maximum design speed in either Tank 241-AY-102 or Tank 241-C-106 is less than 14 kPa (2 psig), as discussed in Chapter 2.0. Higher than design fan speeds would require some failure in the fan motor controller system (combined with blocked inlet pathways). To reach motor speeds much higher than the design speed, the overcurrent protection on the fan motor also would have to fail. Even if all the preceding controller failures occurred, the fan motor could not credibly reach speeds required to generate a vacuum of -55 kPa (-8 psig) before the motor circuits failed as the result of excess current.

Although structural failure is not deemed credible, an excessive vacuum event could result in failure of the ventilation system seal loops and small unfiltered releases because of inability to maintain tank headspace vacuum at nominal flow rates. Unfiltered release events resulting from excess vacuum are analyzed in Section 3.4.2.3 of this addendum.

3.4.2.7.1 Scenario Development. No credible tank failure resulting from an excessive vacuum scenario has been identified.

3.4.2.7.2 Source Term Analysis. Not applicable.

3.4.2.7.3 Consequence Analysis. Not applicable.

3.4.2.7.4 Comparison with Guidelines. Not applicable.

3.4.2.7.5 Summary of Safety Structures, Systems, and Components and Technical Safety Requirement Controls. Safety structures, systems, and components and TSR controls need not be designated because excess vacuum cannot cause tank failure leading to an airborne release of radioactive material.

3.4.2.8 Flammable Gas Deflagration. This analysis addresses the hazards and controls associated with the generation, storage, release, and postulated combustion of flammable gases in Tank 241-AY-102, a double-shell AWF tank; Tank 241-C-106, a SST; and the associated transfer systems. This hazard was first identified as an unreviewed safety question (USQ) in 1990. This USQ was updated on November 1, 1996 (TF-96-0433, *Consolidation of Flammable Gas/Slurry Growth Unreviewed Safety Question Issues*) to account for increased understanding of the nature of the hazard and the affected facilities. The updated USQ addresses potential flammable gas hazards in the AWF tanks. The flammable gas USQ remains open for the facilities associated with WRSS operations as of this writing.

This BIO Addendum affirms the applicability of the U.S. Department of Energy, Richland Operations Office approved controls for the performance of WRSS operations (HNF-SD-WM-TSR-006, *Tank Waste Remediation System Technical Safety Requirements*). This affirmation is required for several reasons.

- The ventilation system on Tank 241-C-106 is being modified in a manner that will reduce flow rate from a nominal 67.9 m^3/min (2400 ft^3/min) to 10.2 m^3/min (360 ft^3/min). The reduction in ventilation flow rate will result in an increase in the flammable gas concentration in the tank headspace.

- The sluicing of the sludge in Tank 241-C-106 has the potential to release the flammable gas that has accumulated in the waste matrix and is trapped beneath the waste surface.

- The addition of Tank 241-C-106 sludge to Tank 241-AY-102 will increase the gas generation rate in this tank. This results in an increase in the chronic (or "steady state") gas release rate to the tank vapor space, and thus an increase in the gas concentration.

- The gas retention and release behavior of the sludge may be changed after it is moved from Tank 241-C-106 to Tank 241-AY-102. This may result from changes in gas generation rates, waste sludge rheology, and waste configuration where the sludge will be stored under a large amount of supernatant liquids in Tank 241-AY-102, whereas little supernate is currently contained in Tank 241-C-106. These changes may result in an increased likelihood of a buoyant displacement gas release event (GRE).

Evaluation Methodology. The sluicing and transfer of sludge from Tank 241-C-106 to Tank 241-AY-102 and subsequent storage of the sludge in Tank 241-AY-102 is evaluated by determining the impact of this sluicing and subsequent storage on key flammable gas phenomena as described in the main text of the BIO. Controls specified for current operations and storage are justified as being adequate or are modified to be adequate for the sluicing and subsequent storage conditions.

Radioactive waste generates hydrogen through the radiolysis of water, thermolytic decomposition of organic compounds, and corrosion of the tank's carbon steel walls. Radiolysis and thermolytic decomposition also generate ammonia. Additional flammable gases (such as methane) and an oxidizer

(e.g., nitrous oxide) are generated by chemical reactions between various degradation products of organic chemicals originally present in the tank. Volatile or semi-volatile organic chemicals also produce organic vapors.

The gas generated through these processes may be released continually to the tank vapor spaces (historically referred to as steady state flammable gas generation) or be retained by the tank's waste matrix, potentially resulting in an episodic GRE. Steady state flammable gas generation from radiolysis, chemical decomposition, and corrosion is expected from all of the wastes in the Hanford Site underground storage tanks. With a GRE, gas is retained in the tank's waste matrix until it is spontaneously released or a release is induced during waste disturbing activities, such as waste sluicing operations.

An accident scenario for a representative flammable gas deflagration resulting from a GRE in an AWF tank is provided in the BIO, Section 5.3.2.14. The representative GRE accident analysis assumes the release and ignition of sufficient trapped gas such that the resulting energy creates unfiltered release paths, but is insufficient to collapse the tank dome. A gas release of this size has never been observed, and is not expected for the current waste contents of either Tank 241-C-106 or Tank 241-AY-102. Therefore, the energy associated with the deflagration of such a release is considered bounding for these two tanks with their current waste contents.

The source terms selected for the representative GRE accident analysis in the BIO are based on the current waste storage conditions. Changes to the source term may occur as a result of WRSS operations including: (1) bringing AWF waste slurries into Tank 241-C-106 via the sluicing line and (2) creating a slurry in Tank 241-AY-102 as a result of slurry transfer from Tank 241-C-106. The analysis in the main text of the BIO assumes that the material released from an SST has a source term consistent with SST solids. The analysis in the BIO assumes that the material released from an AWF tank has a source term consistent with AWF liquids. As seen in WHC-SD-WM-SARR-016, *Tank Waste Compositions and Atmospheric Dispersion Coefficients for use in Safety Analysis Consequence Assessments*, release of AWF slurries (a combination of liquids and solids) from Tank 241-C-106 rather than the assumed SST solid wastes could result in an increased radiological dose at the receptor locations. Additionally, the existence of a solids component in the material released from Tank 241-AY-102 would also result in an increased radiological dose over that when only AWF liquids are assumed to be released. Determination of the fraction of liquid versus solids that may be entrained in the release is an additional uncertainty associated with this event that is not associated with the flammable gas USQ.

As indicated in the BIO, the consequence analysis for the representative GRE is not considered bounding. However, at this point in the resolution process of the open USQ, the analysis serves to indicate the need for an authorization basis control strategy. As provided in the BIO, Appendix E, the control strategy is prevention. Controls related to monitoring and ignition sources are assigned to specific facilities and tanks on the basis of observed and estimated gas release behavior. These controls are not specifically derived from GRE consequence analysis, and would not be changed by variations in the magnitude of the calculated consequences presented in the BIO. The BIO

analysis results are discussed in detail in Section 5.3.2.14 and summarized in Table 5.3.2.14-1 of the BIO main text. The results of the consequence analysis are not tabulated in this addendum.

Applicability of Flammable Gas Controls. The specific monitoring and ignition source controls applicable to the sluicing operation in Tank 241-C-106 are driven by assignment of this tank to flammable gas Facility Group 3 (BIO, Appendix E) and the nature of activities and operations performed. The sluicing operation does not alter the assignment of Tank 241-C-106 to Facility Group 3. In addition, performance of the sluicing operation falls within the authorization basis definitions for the nature and location of activities and operations. Therefore, with respect to GRE behavior that may be associated with operation of the WRSS, the existing authorization basis monitoring and ignition source controls continue to apply.

The specific monitoring and ignition source controls applicable to the use of supernatant liquids from Tank 241-AY-102 as the sluicing fluid and the transfer and storage of sludge from Tank 241-C-106 to Tank 241-AY-102 are driven by assignment of Tank 241-AY-102 to flammable gas Facility Group 2 (main text of the BIO, Appendix E) and the nature of activities and operations performed. The sluicing operation does not alter the assignment of Tank 241-AY-102 to Facility Group 2. In addition, performance of the sluicing operation falls within the authorization basis definitions for the nature and location of activities and operations. Therefore, with respect to GRE behavior that may be associated with the sluicing operation, the existing authorization basis monitoring and ignition source controls continue to apply. The impact of storing additional sludge in Tank 241-AY-102 on the flammable gas Facility Group assignment is discussed in the Gas Release Event evaluation section which follows.

The strategy to prevent or mitigate potential hazards associated with flammable gas in Tank 241-C-106 and Tank 241-AY-102 during the performance of the sluicing operation involves implementation of the controls detailed in the BIO TSR (HNF-SD-WM-TSR-006). The BIO, Appendix E strategy is to expeditiously implement achievable and practical controls to manage postulated flammable gas risks. While doing so, progress towards safety issue resolution and USQ closure will continue to concentrate on remaining uncertainties regarding the quantification of risk and effectiveness of control strategies.

The controls are aimed primarily at prevention of ignition of flammable gas (although certain aspects of the control strategy are mitigative in nature). Provisions for ventilation serve to prevent accumulation of chronically released gases and possibly reduce the time at risk assuming the occurrence of a spontaneous or induced gas release. Flammable gas monitoring requirements serve to validate ventilation effectiveness as well as prevent or halt manned activities when margin of safety is considered to be insufficient (i.e., conditions are such that the flammable gases exist in concentrations greater than 25% of the lower flammability limit [LFL]). Ignition controls related to work practices and equipment requirements serve to eliminate, to the greatest extent practical, ignition sources.

This three-pronged control strategy (ventilation, monitoring, and ignition source control) is effective in preventing the accumulation of flammable gases where ignition sources may be present or to eliminate ignition sources where flammable gases may potentially be present. Neither the BIO nor this addendum present analysis results that quantitatively demonstrate the effectiveness of these controls to prevent flammable gas deflagrations. Quantitative demonstration of the effectiveness of controls will be accomplished as part of the flammable gas USQ closure process.

3.4.2.8.1 Steady State Generation.

Tank 241-C-106. Sluicing operations in Tank 241-C-106 will not increase the steady state generation of flammable gases. Steady state flammable gas generation is dependent on several parameters including waste volume, decay heat load, waste temperature, organic complexant chemical concentrations, and nitrate/nitrite concentration. Removing sludge from Tank 241-C-106 will decrease the gas generation rate.

Implementation of WRSS operations, however, does include modifications to the ventilation system provided to Tank 241-C-106. These modifications result in a ventilation flow rate reduction from a nominal 67.9 m^3/min (2400 ft^3/min) to 10.2 m^3/min (360 ft^3/min). Currently, Tank 241-C-106 is estimated to be generating and releasing hydrogen at a best estimate rate of 0.18 m^3/day (6.5 ft^3/day) (HNF-SD-WM-CN-114, *Project W-320 Primary Ventilation Air Flow Requirements for Mitigation of Steady State Flammable Gas Concentrations in the Headspaces of Tanks 241-C-106 and 241-AY-102*). This release rate requires 5.0×10^{-3} m^3/min (0.18 ft^3/min) ventilation flow rate to keep the headspace below 100% of the LFL, and 2.0×10^{-2} m^3/min (0.7 ft^3/min) ventilation flow rate to keep the headspace below 25% of the LFL. Using an upper bound hydrogen generation rate of 0.19 m^3/day (6.7 ft^3/day), the required ventilation flow rates are 5.1×10^{-3} and 2.1×10^{-2} m^3/min (0.18 and 0.74 ft^3/min) to keep the headspace below 100% and 25% of the LFL, respectively. If active ventilation were completely lost, the 2690 m^3 (95,000 ft^3) headspace of Tank 241-C-106 would reach 25% of the LFL in 117 days using the best estimate hydrogen generation rate and 113 days using the upper bound rate (HNF-SD-WM-CN-114).

Based on gas concentration measurements taken under high flow rate conditions, the current ventilation system is proven to provide adequate ventilation to sweep out the steady state generated gases. The new system has no operational history upon which to base the claim it will also provide adequate ventilation. However, analysis of the steady state hydrogen concentration in the headspace of Tank 241-C-106 indicates that only 2.1×10^{-2} m^3/min (0.74 ft^3/min) of ventilation airflow is needed to ensure that the flammable gas concentration in the headspace remains less than 25% of the LFL (HNF-SD-WM-CN-114). To confirm this, flammable gas monitoring will be used for a short time after full startup (steady state conditions attained) of the new ventilation system to confirm the system's ability to keep flammable gas concentrations below 25% of the LFL. As a backup, the higher capacity system will be maintained in an available condition until the monitoring is complete.

Tank 241-AY-102. Adding sludge to Tank 241-AY-102 will increase the gas generation rate in this tank. The implementation of the BIO, Appendix E control strategy to Tank 241-AY-102 during and following WRSS operations, provides ventilation to prevent accumulation resulting from a steady state gas release. However, the safety margin provided by compliance with the ventilation requirements of the BIO TSRs (HNF-SD-WM-TSR-006) may be decreased as a result of the sludge addition. This is due to the expected increases in waste volume, decay heat load, and waste temperature resulting from the added high heat load waste.

In order to provide some degree of confidence that the ventilation flow and AWF TSRs for ventilation restoration are adequate to prevent a flammable gas deflagration resulting from the increased gas generation rate, available gas monitoring and ventilation data were reviewed and a scoping analysis was performed via an engineering Calculation Note (HNF-SD-WM-CN-114).

This calculation note determined that Tank 241-AY-102 is generating and releasing hydrogen at the best estimate rate of 0.39 m^3/day (14 ft^3/day) (HNF-SD-WM-CN-114). The upper bound hydrogen generation rate is 0.57 m^3/day (20 ft^3/day). If all the waste in Tank 241-C-106 is transferred to Tank 241-AY-102, a best estimate is that Tank 241-AY-102 would generate 0.58 m^3/day (20.5 ft^3/day) hydrogen, with an upper bound of 0.75 m^3/day (26.7 ft^3/day) (HNF-SD-WM-CN-114). A second conservative assumption is that the headspace volume of Tank 241-AY-102 is limiting at 930 m^3 (33,000 ft^3) (HNF-SD-WM-CN-114).

Under the upper bound hydrogen generation rate conditions, a ventilation flow rate of 8.3 x 10^{-2} m^3/min (2.95 ft^3/min) is sufficient to ensure the headspace remains below 25% LFL. The minimum design flow rate provided by the upgraded AY/AZ vent system (241-AZ-702), 2.8 m^3/min (100 ft^3/min) per tank, exceeds the 25% LFL ventilation requirement by an order of magnitude. This evaluation provides some confidence in the adequacy of the ventilation system to prevent the steady state accumulation of flammable gas to levels above the LFL since the minimum ventilation flow rate provided by the existing 241-A-702 ventilation system ranges from approximately 11.3 to 17.0 m^3/min (400 to 600 ft^3/min) and the minimum ventilation flow rate provided by the 241-AZ-702 ventilation system is approximately 2.8 m^3/min (100 ft^3/min). To confirm this, flammable gas monitoring will be used for a short time after completing the sludge transfer to Tank 241-AY-102 (steady state conditions attained) to confirm the system's ability to keep flammable gas concentrations below 25% of the LFL. The risk of this approach is low since the calculations show a large margin between what is required (6.8 x 10^{-2} m^3/min) and what is provided (at least 2.8 m^3/min).

The scoping analysis then determined the flammable gas concentration increase transient, assuming a loss of forced ventilation. Based on the estimated gas generation rate after the addition of Tank 241-C-106 sludge, the amount of time with no forced ventilation flow before the dome space concentration would exceed 25% of the LFL is approximately 7.7 days, using upper bound generation rates (HNF-SD-WM-CN-114). In addition, the amount of time with no ventilation flow before exceeding the LFL is more than 33 days. This evaluation provides some confidence in the adequacy of the BIO TSRs

(HNF-SD-WM-TSR-006) to prevent the steady state accumulation of flammable gas to levels above the LFL because ventilation restoration is required immediately, and gas monitoring is required to be initiated within 72 hours.

The implementation of the main text of the BIO, Appendix E control strategy in conjunction with the application of the BIO TSRs (HNF-SD-WM-TSR-006) provides adequate controls to prevent a flammable gas deflagration as a result of steady state flammable gas generation.

3.4.2.8.2 Gas Release Event.

Gas Release Events in Tank 241-C-106. The sluicing operation disturbs the waste sludge which could potentially result in a GRE. Sluicing is conservatively defined as a globally waste disturbing operation (BIO, Appendix E). Waste disturbing activities represent the primary means of releasing gas retained in the waste matrix resulting in a GRE.

The controls required by BIO TSRs (HNF-SD-WM-TSR-006) are graded based on the tank Facility Group assignment and the nature of the operation or activity. Tank 241-C-106 is assigned Facility Group 3 status. This facility assignment means that GRE controls are focused on waste intrusive regions during normal storage when no waste disturbing operations are being performed. Gas release event controls are extended to the dome space intrusive regions during waste disturbing operations. Controls are <u>not</u> extended to ex-tank intrusive regions during globally waste disturbing operations (as would be the case for tanks assigned to Facility Group 2). The sluicing operation involves mobilizing portions of the sludge with a jet of liquid waste and pumping the resultant slurry out of the tank. This operation, therefore, is waste disturbing and GRE controls are required in the dome intrusive region during operation of the WRSS.

The equipment, materials, and work practices associated with the equipment used in Tank 241-C-106 for WRSS operations have been evaluated by the Flammable Gas Equipment Advisory Board (FGEAB) to verify that they are in compliance with the Ignition Source Control Sets #1 and #2 as detailed in BIO TSR AC 5.10 (HNF-SD-WM-TSR-006). The FGEAB evaluation of the equipment, materials, and work practices associated with this project determined that the applicable Ignition Source Control Sets could be satisfied in all cases by implementing several design modifications. The required design modification will be verified to have been implemented during Operational Readiness Review.

Comprehensive compliance with the applicable Ignition Source Control Sets minimizes the potential for an ignition source in regions that could be flammable as a result of a small induced GRE. This control implementation is adequate for the performance of WRSS operations as a large GRE is not expected or postulated. These expectations are based on the following information.

- Small amounts of retained gas (WHC-SD-WM-ER-526, *Evaluation of Hanford Tanks for Trapped Gas*)

- Slurry growth and GRE behavior are associated with tanks that contain large quantities of organic complexants. Although Tank 241-C-106 might have contained organic complexant waste in the

past, samples indicate that almost all the complexants have decomposed to oxalate.

- No supernate to drive buoyant displacement GREs.

Thus, the implementation of the main text of the BIO, Appendix E control strategy during sluicing in Tank 241-C-106 provides adequate control to prevent a flammable gas deflagration as a result of a GRE.

Gas Release Events in Tank 241-AY-102. Gas release events are postulated to occur in DST and AWF tanks spontaneously or as a result of waste disturbing operations and activities. The controls required by the BIO TSRs (HNF-SD-WM-TSR-006) are graded based on the tank Facility Group assignment and the nature of the operation or activity. Tank 241-AY-102 is assigned Facility Group 2 status. This facility assignment means that GRE controls are focused on dome space intrusive and waste intrusive regions during non-waste disturbing or locally waste disturbing operations. Controls are extended to ex-tank intrusive regions during global waste disturbing operations. WRSS involves waste addition/removals or transfers in Tank 241-AY-102 which are defined as global waste disturbing operations. Therefore, the expanded controls are required during WRSS transfers.

The assignment of Facility Group 2 is based on consideration for future use of the tanks rather than current waste inventory or current observation of GRE behavior. All DST and AWF tanks are assigned to Facility Group 2 unless they have observed large spontaneous GRE behavior, in which case they are assigned Facility Group 1 status. The DSTs and AWFs are within their design life and are integral to the safe waste storage and disposal mission. They will receive new waste from other Hanford Site facilities and will undergo liquid reductions, waste consolidation, multiple transfers, and mixing.

Procedures are in place to minimize the likelihood that these operations would create conditions resulting in large spontaneous gas release behavior. However, it is recognized that some operations may result in increased gas generation and retention. Therefore, it is appropriate to categorize these facilities in Facility Group 2 or higher. In the unlikely event that significant GRE behavior develops in Facility Group 2 tanks, they will be moved to Facility Group 1 (main text of the BIO, Appendix E). Therefore, Tank 241-AY-102 will remain assigned to Facility Group 2 unless large spontaneous GRE behavior is observed as a result of WRSS or any other waste transfers to this tank. If large spontaneous GRE behavior is anticipated or observed, the GRE behavior can be at least partially mitigated by removal of the supernatant liquid. Removal of the supernatant liquid mitigates GREs by reducing waste buoyant displacements and increases the tank dome space available for dilution of the released gas.

The equipment, materials, and work practices associated with this project were evaluated by the FGEAB to verify that the equipment and materials used in and around Tank 241-AY-102 are in compliance with the Ignition Source Control Sets #1 and #2 as detailed in BIO TSR AC 5.10 (HNF-SD-WM-TSR-006). The FGEAB evaluation of the equipment, materials, and work practices associated with this project determined that the applicable Ignition Source Control Sets could

be satisfied in all cases by implementing several design modifications. The required design modification will be verified to have been implemented during Operational Readiness Review.

Comprehensive compliance with the applicable Ignition Source Control Sets not only minimizes the potential for an ignition source following a steady state gas release, but also minimizes the potential for an ignition source following a GRE. This control implementation provides an additional level of safety in order to prevent a flammable gas deflagration even if a large GRE were to occur. However, a large GRE is not expected to occur during or following WRSS operation. These expectations are based on the following information.

- LA-UR-97-1330, *Discussion of Flammable Gas Issues for Project W-320*, states that since Tank 241-AY-102 does not contain any organic complexants and is very dilute in terms of nitrates and nitrites, the volume of retained gas in the sludge following the transfer should be small (retained gas void fraction is estimated to be less in Tank 241-AY-102 than currently exists in Tank 241-C-106).

- Because the retained gas void fraction is expected to be low, and the neutral-buoyancy void fraction is estimated to be > 20%, episodic releases (rollovers) are not expected in Tank 241-AY-102 (LA-UR-97-1330, Appendix B).

- Because the makeup of Tank 241-AY-102 will be principally Tank 241-C-106 sludge and GRE behavior is not observed in Tank 241-C-106, GRE behavior is not anticipated in Tank 241-AY-102.

The implementation of the main text of the BIO, Appendix E control strategy during WRSS operation in Tank 241-AY-102 provides adequate control to prevent a flammable gas deflagration as a result of a GRE, even though a GRE is not expected to occur.

3.4.2.8.3 Controls. This section summarizes the adequacy of existing controls for the implementation of WRSS operations, and summarizes any required new controls.

Safety Structures, Systems, and Components. Because of the open status of the USQ and the technical uncertainties associated with the flammable gas safety issue, it is assumed that installed equipment that performs a critical safety function to prevent or mitigate risk from flammable gas deflagrations merits a safety class designation. Additional analysis provided by the final safety analysis report or in support of safety issue resolution and USQ closure may provide refinement to this approach. As indicated in the BIO, the ventilation safety function is designated as Safety Class. The new ventilation system to be utilized on Tank 241-C-106, therefore, is designated safety class. There are no unique new safety functions needed or provided by WRSS operations, and therefore the safety SSCs as stated in the main text of the BIO remain applicable. The SSCs credited with managing risk from flammable gas deflagrations are repeated in Table 3.2.4.8-1.

Technical Safety Requirement Controls. The fundamental control strategy for all affected facilities is contained in the BIO TSRs (HNF-SD-WM-TSR-006). WRSS operations relies on these TSRs for management of flammable gas hazards. There are no unique new safety requirements needed for, or provided by, WRSS operations, and therefore the BIO TSRs remain applicable. The TSRs credited in the BIO for managing risk from flammable gas deflagrations are repeated in Table 3.4.2.8-2.

Defense in Depth. There are unique and specific Defense-in-Depth measures that apply to the risk management of the flammable gas hazard for WRSS operations. These are included in the Process Control Plan, which is described in Section 2.5. Key Defense-in-Depth items are listed in Table 3.4.2.8-3.

Relative to managing risk from GREs in Tank 241-C-106 during sluicing, the Process Control Plan includes monitoring the headspace concentrations in Tank 241-C-106 and stopping sluicing if concentrations exceed 25% of the LFL.

Relative to managing risk from the ignition of GREs during operation of the WRSS, flammable gas concentrations will be monitored in Tank 241-AY-102 and WRSS will be stopped if concentrations exceed 25% of the LFL.

Relative to managing future GRE behavior in Tank 241-AY-102, the Process Control Plan collects data in order to avoid making Tank 241-AY-102 into a tank that experiences large episodic releases of flammable gas. The Process Control Plan requires baseline hydrogen concentration data from both tanks, and a series of stages where a transfer of waste is made. Monitoring occurs during a waiting period and a decision is made about whether another transfer stage should be done. In addition, a step-by-step contingency plan to remove the supernate out of Tank 241-AY-102 is included to mitigate GRE behavior if retained gas void fractions are estimated to approach neutral-buoyant void fractions.

Table 3.4.2.8-1. Safety Structures, Systems, and Components for Flammable Gas Deflagrations.

Structures, systems, or components	Safety classification		Safety function	Comments
	SC	SS		
Active ventilation	X	--	Maintains flammable gas concentrations in tank dome spaces, due to steady state releases, below 25% of the LFL	Applies to Tanks 241-C-106 and 241-AY-102
Primary tank leak detection system	X	--	Provides indication that corrective action is required to avoid accumulation and deflagration of waste gas in the annulus space	--

LFL = lower flammability limit.
SC = Safety-Class.
SS = Safety-Significant.

Table 3.4.2.8-2. Technical Safety Requirement Controls for Flammable Gas Deflagrations.

Control	Safety function	Comments
DST and AWF Tank Ventilation Systems	Prevents the accumulation of flammable gases due to steady-state releases and reduce the time at risk due to a gas release event	Flow must be verified OR flow monitoring must be performed OR pressure monitoring must occur
SST Ventilation Systems - Active	Applies to Tank 241-C-106 during transfer operations because an active ventilation system is required to remove accumulations of flammable gases produced during activities	Flow must be verified OR flow monitoring must be performed OR pressure monitoring must occur
Primary Tank Leak Detection System	Provides indication that corrective action is required to avoid accumulation and deflagration of waste gas in the annulus space	--
Flammability controls	A program will be established, implemented, and maintained to manage flammable gas hazards	During the performance of WRSS transfer operations there is the possibility of flammable conditions developing as a result of waste disturbing activities
Ignition controls	A program will be established, implemented, and maintained to manage potential ignition sources that can initiate a fire or flammable gas deflagration	Ignition controls for the annulus includes leak detection systems
Flammable gas monitoring	A program will be established, implemented, and maintained to monitor flammable gas concentrations to prevent deflagrations	
Emergency Preparedness - Response procedures	A program will be established, implemented, and maintained to ensure that emergency response plans are developed to direct facility actions in the event of a deflagration/detonation	--
HEPA filter controls - Periodic radiation surveillance - Replacement based on accumulation	Reduce consequences from a possible HEPA filter failure by limiting the inventory available for release.	--

AWF = aging waste facility.
DST = double-shell tank.
HEPA = high-efficiency particulate air (filter).
LFL = lower flammability limit.
SST = single-shell tank.
TWRS = Tank Waste Remediation System.
WRSS = Waste retrieval sluicing system.

Table 3.4.2.8-3. Defense-in-Depth Controls for Flammable Gas Deflagrations.

Control	Safety function	Comments
Monitor dome pressure in Tank 241-C-106 and Tank 241-AY-102 during sluicing	To determine if gas release events are occurring	A positive pressure increase indicates a release
Periodic video monitoring of the waste in Tank 241-AY-102	Foaming can cause enhanced retention of flammable gases. In addition, the foam could cause the high-level detector to function introducing an intermittent spark source	--
Measure background concentrations in both tanks for 3-4 weeks prior to sluicing	To determine the baseline generation rates and types of flammable gases in the tanks	Supports the Process Control Plan
Monitor the ventilation flow rates in both tanks during and after sluicing	This is used to help determine how much flammable gas is released versus how much gas is retained	Supports the Process Control Plan
Monitor level growth and use barometric pressure evaluation after sluicing	This determines whether Tank 241-AY-102 will become a tank that undergoes gas release events (often called rollovers)	Supports a decision on whether the contingency plan for removal of supernate from Tank 241-AY-102 if evaluation of conditions indicates a potential for rollover needs to be implemented
Flammable gas monitoring during sluicing	Determines if release events are occurring and provides evidence of gas retention	Stopping transfer activities between Tank 241-C-106 and Tank 241-AY-102 immediately if the concentration of flammable gas is > 25% of the LFL and transfer operations are in progress provides protection for the worker, minimizes activities that can produce an ignition source, and ensures the sluicing operation remains safe
HEPA filter replacement typically performed at 1 mSv/h (100 mrem/h)	Limit inventory available for release and limit dose rate to workers in the vicinity of the filters	--

HEPA = high-efficiency particulate air (filter)
LFL = lower flammability limit.

3.4.2.9 Organic Solvent Fire. This section evaluates risks associated with the presence of separable-phase organic solvents in Tank 241-AY-102 and Tank 241-C-106 during and after WRSS operations. Both tanks have been identified as potentially containing a separate organic solvent phase capable of sustained burning (WHC-SD-WM-CN-032, *Analysis of Consequences of Postulated Solvent Fires in Hanford Site Waste Tanks*). If a separable organic liquid phase exists or is created by sluicing and is subsequently ignited, energy sufficient to release hazardous materials from the tanks could be liberated.

The analysis for an organic solvent fire contained in WHC-SD-WM-CN-032 is almost entirely applicable to Tank 241-AY-102 and Tank 241-C-106. The ventilation rate considered is 0.047 m^3/s (100 cfm). Therefore, the following sections are based on the analysis in WHC-SD-WM-CN-032 with modifications only to the extent necessary for their application to sluicing of Tank 241-C-106. The type of organic material involved in this accident is bis(2-ethylhexyl) phosphate instead of the tri-butyl phosphate (TBP) and normal paraffin hydrocarbon analyzed in the main text.

This analysis also closely follows that found in Section 5.3.2.15 of the main text. When the discussions between Section 5.3.2.15 of the BIO overlap with the discussions in this analysis, only a summary is presented here.

WHC-SD-WM-CN-032 evaluates the frequency and consequences of the following three basic fire scenarios.

- **Pool Fires**—Pools are a layer of solvent floating on top of liquid waste or a layer that is trapped in a depression on top of solid waste. Neither Tank 241-AY-102 nor Tank 241-C-106 currently has a solid layer on top of the waste, but the analysis bounds such a possibility. The solids layer might occur on top of the waste if, for example, Tank 241-C-106 were to lose water and expose the solids at the bottom of the tank. The organic solvent pool has an area greater than 1 m^2 (10.8 ft^2).

- **Puddle Fires**—Puddles are 1 m^2 (10.8 ft^2) or less in area and would exist only in a depression in a solid waste surface. A puddle could occur in Tank 241-C-106 if the water layer were lost.

- **Wick-Stabilized Fires**—A wick-stabilized fire configuration would be a sludge or salt cake permeated with solvent. As the solvent burned, the sludge or salt cake would act as a wick. This case applies only to Tank 241-C-106 if the water layer in the tank were lost.

In addition to the accident scenarios identified in WHC-SD-WM-CN-032, the hazards analysis documented in Section 3.3 identifies several accident sequences specific to Tank 241-AY-102, Tank 241-C-106, and WRSS operations. The dominant sequences include the creation of a separable organics phase as a result of pumping and sluicing operations and subsequent ignition of the separated organic solvent. Less likely event sequences include inadvertently allowing the solids to become exposed and the organic components subsequently igniting.

The possibility of an organic solvent pool resulting in significant headspace flammability concerns is addressed in WHC-SD-WM-CN-032. The conclusion from WHC-SD-WM-CN-032 is that the low-volatility compounds in the waste pose little flammable vapor hazard, even if a separable organics phase forms. The organophosphates found in Tank 241-C-106 are bounded, in terms of volatility, by the organophosphates assumed in WHC-SD-WM-CN-032. Therefore, a flammable vapor deflagration resulting from formation of a separable organics phase in Tank 241-AY-102 or Tank 241-C-106 is not evaluated as a separate event.

3.4.2.9.1 Scenario Development. Four cases from WHC-SD-WM-CN-032 were found to bound organic solvent fires for sluicing operations.

- **Case G**—Bounding radiological accident for a single-shell tank fire (Tank 241-C-106).
- **Case K**—Bounding radiological accident for a double-shell tank fire (Tank 241-AY-102).
- **Case H**—Bounding toxicological accident for a single-shell tank fire (Tank 241-C-106).
- **Case L**—Bounding toxicological accident for a double-shell tank fire (Tank 241-AY-102).

The letter designator for each "case" is taken from the spreadsheet calculations in WHC-SD-WM-CN-032. The designators are maintained throughout this analysis to ease cross-referencing to the source document.

Scenarios Without Controls

- **Initiators**—An evaluation of potential initiators, including results from testing laboratories, is given in WHC-SD-WM-CN-032. For the cases involving pool and puddle fires, the only initiators with sufficient energy to cause ignition are lightning strikes and vehicle fuel fires. However, a wick-stabilized fire was found to require less energy to initiate and less energy to maintain the necessary conditions for combustion. For a wick-stabilized fire, initiators include hot metal from cutting torches, but not sparks or slag from welding; lightning strikes; and vehicle fuel fires.

  A flammable gas deflagration is also a potential initiator to an organic solvent fire in a tank. However, the consequences of a flammable gas deflagration (Section 3.4.2.8) are evaluated as a separate accident and applicable controls have already been developed for them.

- **Bounding Radiological and Toxicological Wick-Stabilized Fire in Single-Shell Tank, Case Q** WHC-SD-WM-CN-032 indicates that solvent could intrude into the underlying sludge or salt cake in a single-shell tank following salt well pumping of drainable liquids from a tank. This condition also applies to Tank 241-C-106 during sluicing operations if the water is inadvertently drained from the tank by the slurry pump, or makeup cooling water is not provided. Exposed solids saturated with solvent could burn like a candle using the solids as a wick. The burning surface would slowly increase and could eventually cover approximately 40 m^2 (431 ft^2).

- **Bounding Radiological Single-Shell Tank Fire, Case G** WHC-SD-WM-CN-032 indicates that in this scenario a pool of solvent is postulated to burn on the waste surface of an actively ventilated single-shell tank. The active ventilation system results in more radioactive material being exhausted from the tank, even after the fire is extinguished, and applies to Tank 241-C-106.

- **Bounding Radiological Double-Shell Tank Fire, Case K** WHC-SD-WM-CN-032 indicates that a puddle fire (1 m^2 [10.8 ft^2]) is bounding for radiological releases from double-shell tanks (e.g., Tank 241-AY-102). A puddle fire assumes that the solvent collects in a small area on a solids surface. Tank 241-AY-102 does not have a known solids layer on top of the liquid layer, but the supernate in Tank 241-AY-102 could be almost completely removed following cessation of WRSS operations. In that case, inadvertent exposure of the solids in Tank 241-AY-102 would be more likely. Therefore, Case K is retained as the bounding case for Tank 241-AY-102.

- **Bounding Toxicological Single-Shell Tank Fire, Case H** WHC-SD-WM-CN-032 indicates that this case is a passively ventilated pool fire with the large vent path model (9.5cm [3.75in.]) orifice and a 1.27m (50in.) orifice. The large vent path results in the toxic material in the headspace being rapidly ejected from the tank. Because toxicological guidelines are based on concentration, this case produces the largest toxicological consequence.

- **Bounding Toxicological Double-Shell Tank Fire, Case L** WHC-SD-WM-CN-032 indicates that a pool fire (210 m^2 [2,260 ft^2]), an active ventilation system, and a large vent path (1.27m [50in.]) orifice and a 0.24m (9.6in.) orifice is bounding for this case. This case applies to all double-shell tanks, including Tank 241-AY-102. The large vent path results in the toxic material in the headspace being rapidly ejected from the tank. Because toxicological guidelines are based on concentration, this case produces the largest toxicological consequence.

Accident Frequencies Without Controls. The accident frequency without controls is assigned based on the frequency of the initiating event. For an organic solvent fire in Tank 241-AY-102 or Tank 241-C-106, the accident frequency is the sum of the frequencies of lightning strikes, vehicle fuel

fires, and the presence of hot metal from cutting torches. WHC-SD-WM-CN-032 shows that these are the only potential ignition sources that also have sufficient energy to start a fire.

- **Lightning**—The frequency of lightning strikes is determined in WHC-SD-WM-CN-032 as 3×10^{-5} per year per tank. This frequency applies directly to WRSS operations.

- **Vehicle Fuel Fire**—WHC-SD-WM-CN-032 determined that the frequency of a vehicle collision with an aboveground structure is 7×10^{-5} per tank per year. This frequency applies directly to WRSS sluicing operations.

- **Flame or Torch Cutting**—Flame or torch cutting on a tank or its attachments (i.e., a riser or a ventilation duct) where hot chunks of metal could fall to the waste surface is not a common activity. For the sluicing operations, no more than five flame or torch cutting operations per year per tank are expected, excluding the initial facility modifications. The basic human error probability of 1×10^{-2} is assumed in estimating the likelihood of dropping hot metal into a tank during a cutting operation. The resulting frequency of an event during a cutting activity is then

  $$(5) \times (1 \times 10^{-2}) = 5 \times 10^{-2} \text{ per year per tank.}$$

  The only case where hot metal from a cutting operation could initiate a fire is for the wick-stabilized condition. The probability of igniting solvent-permeated sludge is estimated at 1×10^{-1} (WHC-SD-WM-CN-032). The probability of draining Tank 241-C-106 to obtain an exposed solids layer is taken to be 1×10^{-2} for human error to inadvertently drain the tank and not correct the loss of water condition. Therefore, the overall frequency without controls of having a wick-stabilized solvent fire resulting from torch cutting is

  $$(5 \times 10^{-2}) \times (1 \times 10^{-1}) \times (1 \times 10^{-2}) = 5 \times 10^{-5} \text{ per year per tank.}$$

  Although WHC-SD-WM-CN-032 indicates that hot metal from cutting torches would not initiate a fire in a double-shell tank (Tank 241-AY-102), the possibility of exposing the solids layer in Tank 241-AY-102 must be considered. The supernate in Tank 241-AY-102 could be substantially reduced following cessation of sluicing operations. This configuration increases the likelihood of inadvertently exposing the solids layer. Furthermore, inclusion of the frequency of hot metal as an initiator does not alter the conclusions of the frequency analysis. The frequency category is the same with or without the frequency of the hot metal initiator.

- **Overall Frequencies**—For Tank 241-AY-102 and Tank 241-C-106, the sum of the frequencies for lightning, vehicle fuel fire, and torch cutting scenarios is the overall frequency of an organic solvent fire. This frequency is $(3 \times 10^{-5}) + (7 \times 10^{-5}) + (5 \times 10^{-5}) = 1.5 \times 10^{-4}$ per tank per year, times one tank (241-AY-102 or 241-C-106), for a frequency of

1.5 x 10^{-4} per year for either tank. These frequencies fall into the range of "unlikely" (10^{-4} to 10^{-2} per year) for determining risk evaluation guidelines.

Note that if the torch-cutting scenario is excluded from the frequency for Tank 241-AY-102, the overall frequency would be 1 x 10^{-4} per year, which still falls within the "unlikely" category.

Scenarios With Controls. The controls specified in this analysis eliminate two of the three possible initiators: vehicle fuel spills and flame cutting. The scenario with controls is, therefore, an organic solvent fire initiated by a lightning strike.

Frequencies With Controls. The frequency bin for the accidents without controls is "unlikely." The multiple control strategy for protection of fuel and prevention of ignition sources eliminates vehicle fuel fires and flame cutting as initiators. Failure of these controls is considered a beyond design basis event. Only lightning remains, with an initiating event frequency of 3 x 10^{-5} per year. For both tanks this results in a frequency designation of "extremely unlikely" for the accident scenarios with controls.

3.4.2.9.2 Source Term Development. The source terms from an organic solvent fire in Tank 241-AY-102 or Tank 241-C-106 are based on the source term models developed in WHC-SD-WM-CN-032.

The radiological material inventory for ventilation system components is summarized in HNF-SD-WM-CN-099. Of the three material inventories from the fire, only the HEPA filter source term is different than that calculated in WHC-SD-WM-CN-032. The different material inventory for the HEPA filters is discussed below.

HNF-SD-WM-CN-099 also lists the toxicological material inventory. Of the toxicological material inventories, only phosphorous pentoxide (P_2O_5) differs from that calculated in WHC-SD-WM-CN-032. Because of recent test data on the organic content of Tank 241-C-106, the assumptions pertaining to the types and quantities of organophosphates are different from those in WHC-SD-WM-CN-032. The material inventory calculations (emission factor) for the solvent smoke in this analysis address the new P_2O_5 inventory.

Filters. The air filter material inventories for the bounding ventilation systems for Tanks 241-AY-102 and 241-C-106 are taken from HNF-SD-WM-CN-099. The values in WHC-SD-WM-CN-032 are not appropriate because the difference in ULDs results in different filter loadings. The filter loadings are calculated from radiation readings near the surface of the filter housings (based on the filter change-out requirements), and different ULDs comprise different mixtures of isotopes. Selecting different ULDs results in altering the isotopic distribution on the filters and, subsequently, the radiological loadings on the filters.

HNF-SD-WM-CN-099 reports air filter loadings and subsequent inventory released following an overpressure event for both tanks and the various possible ventilation configurations.

The bounding HEPA filter material releases (based on the liquid/solid split discussed in Section 3.4.1) from HNF-SD-WM-CN-099 are as follows:

- Tank 241-C-106, 1.91×10^{-1} L; 296-C-006 system
- Tank 241-AY-102, 3.66×10^{-2} L; 241-A-702 system.

These releases are based on pressure failure of the filters, which bounds temperature failure (HNF-SD-WM-CN-099). These inventories are used in Table 3.4.2.9-1 to calculate dose consequences.

Solvent Smoke. The inventories arising from the solvent smoke (combustion products) are taken from WHC-SD-WM-CN-032. The radiological inventories are as follows:

- Case G, Tank 241-C-106; 4.38 kg (9.66 lb) of Tank 241-C-106 tank waste
- Case K, Tank 241-AY-102; 13.2 kg (29.1 lb) of Tank 241-AY-102 tank waste.

These inventories are used in Table 3.4.2.9-1 to calculate dose consequences.

The toxic materials produced by the organic solvent fire are modeled in WHC-SD-WM-CN-032 as CO, NO_2, and P_2O_5. These materials represent the predominant combustion species that can be expected to form when hydrocarbon liquids and organophosphates are burned.

The inventories for CO and NO_2 are appropriate for a fire in either Tank 241-C-106 or Tank 241-AY-102 and are used from WHC-SD-WM-CN-032 without modification. The inventory for P_2O_5 in WHC-SD-WM-CN-032 is based on the combustion, and subsequent emission factor, of TBP found in Tank 241-C-103. Recent test data documented in HNF-SD-WM-TI-756, *Chemical and Chemically Related Issues Associated with Sluicing Tank C-106 Waste to Tank AY-102*, indicates that Tank 241-C-106 contains a significant amount of bis(2-ethylhexyl) phosphate. Therefore, a new emission factor must be calculated for the P_2O_5. The method used to calculate the new emission factor is identical to that used in WHC-SD-WM-CN-032.

The stoichiometry for the oxidation of bis(2-ethylhexyl) phosphate is

$$C_{16}H_{35}O_4P + 24\ O_2 = 16\ CO_2 + 17.5\ H_2O + 0.5\ P_2O_5.$$

Using molecular weights of 322.48 g/mol for bis(2-ethylhexyl) phosphate and 142 g/mol for P_2O_5, the mass ratio of P_2O_5 to bis(2-ethylhexyl) phosphate is 0.22. HNF-SD-WM-TI-756 indicates that a minimum of 82% (by mass) of the solvent is made up of organophosphate compounds, but does not list the composition of the remaining 18%. Because the remaining 18% of the solvent could be organophosphate compounds, it is assumed that 100% by mass of the solvent is organophosphates. While this assumption seems overly conservative, a reduction of 18% in the calculated toxicological consequences has no impact on the conclusions reached in this analysis. The emission factor is, therefore, 0.22 kg P_2O_5 formed per kilogram of solvent burned.

The emission factor calculated based on the Tank 241-C-106 waste is bounding for Tank 241-AY-102 because few organophosphate hazards are expected from Tank 241-AY-102 waste.

Aqueous Boil-Off. The radiological inventory arising from the aqueous waste are taken from WHC-SD-WM-CN-032 for the bounding cases and are as follows:

- Case G, Tank 241-C-106; 0.368 kg (0.81 lb) of Tank 241-C-106 tank waste
- Case K, Tank 241-AY-102; 0.333 kg (0.73 lb) of Tank 241-AY-102 tank waste.

These inventories are used in Table 3.4.2.9-1 to calculate dose consequences. The toxicological inventories from the aqueous boil-off and tank headspace are used as modeled in WHC-SD-WM-CN-032.

3.4.2.9.3 Consequence Analysis. The consequence analysis is taken from WHC-SD-WM-CN-032 except for modifications for the ULDs, waste densities, and new P_2O_5 emission factor.

The different ULDs arise from the difference between the operations used as the basis of WHC-SD-WM-CN-032 and those to be performed in sluicing. In WHC-SD-WM-CN-032, it was assumed that no mixing occurred and that the tanks are in essentially a quiescent or static condition. This is not true for sluicing operations, where active mobilization and transport of Tank 241-C-106 solids and potential mobilization and transport of Tank 241-AY-102 solids will occur. Therefore, the ULDs listed in Section 3.4.1 are used in this analysis.

WHC-SD-WM-CN-032 also assumed a waste density of 1 kg/L when multiplying inventories (mass) by ULDs (dose per unit volume). The wastes in Tank 241-C-106 and Tank 241-AY-102 have a density of greater than 1 kg/L. The waste densities of 1.27 kg/L (10% solids and 90% liquids) and 1.41 kg/L (33% solids and 66% liquids) are used in this analysis for fires in Tank 241-AY-102 and Tank 241-C-106, respectively. These densities are used to convert the appropriate ULDs to a mass basis.

Table 3.4.2.9-1 shows the consequences for the cases without controls. Consequences with controls are shown in Table 3.4.2.9-2. The case without controls corresponds to the worst-case frequencies of the bounding fire. The case with controls corresponds to a frequency reduction to "extremely unlikely." The values presented in Table 3.4.2.9-2 are validated in HNF-SD-WM-CN-099, Attachment 6.

The remaining parameters, the breathing rate, and the onsite and offsite atmospheric dispersion factors are taken from WHC-SD-WM-CN-032.

3.4.2.9.4 Comparison with Guidelines. Tables 3.4.2.9-1 and 3.4.2.9-2 compare the accident consequences (without and with controls) to the appropriate risk evaluation guidelines. As can be seen from Tables 3.4.2.9-1 and 3.4.2.9-2, all offsite consequences (radiological and toxicological with

and without controls) are below offsite evaluation guidelines. The table also shows that all onsite consequences (radiological and toxicological with and without controls) are above the onsite evaluation guidelines.

3.4.2.9.5 Summary of Safety Structures, Systems, and Components and Technical Safety Requirements.

Safety Structures, Systems, and Components. No Safety-Class or Safety-Significant structures, systems, and components have been identified in this analysis.

Technical Safety Requirement Controls. Controls that act to prevent (reducing the likelihood) or mitigate the consequences of an organic solvent fire are provided in Table 3.4.2.9-3. The TSRs include ignition controls to prevent igniting an organic pool, transfer controls, emergency preparedness, and HEPA filter controls.

Defense-in-Depth. Defense-in-Depth controls are identified in Table 3.4.2.9-4. These include vehicle positioning spotters, tank farm fences, and HEPA filter replacement.

Table 3.4.2.9-1. Summary of Consequences and Frequencies for Organic Solvent Fire Without Controls.

Accident	Consequences								Frequency
	Radiological, Sv (rem)				Toxicological				
	Onsite		Offsite		Onsite		Offsite		
	Calculated dose	Risk guideline	Calculated dose	Risk guideline	Calculated SOF	Risk guideline	Calculated SOF	Risk guideline	
Organic Solvent Fire in Tank 241-C-106	7.1 E-01 7.1 E+01	5.0 E-02 (5.0 E+00)	5.9 E-04 5.9 E-02	5.0 E-03 (5.0 E-01)	20.4	1	0.22	1	Unlikely
Organic Solvent Fire in Tank 241-AY-102	1.8E-01 1.8E+01	5.0 E-02 (5.0 E+00)	1.5 E-04 1.5 E-02	5.0 E-03 (5.0 E-01)	20.0	1	0.22	1	Unlikely

SOF = sum-of-fractions.

Table 3.4.2.9-2. Summary of Consequences and Frequencies for Organic Solvent Fire With Controls.

Accident	Consequences								Frequency
	Radiological, Sv (rem)				Toxicological				
	Onsite		Offsite		Onsite		Offsite		
	Calculated dose	Risk guideline	Calculated dose	Risk guideline	Calculated SOF	Risk guideline	Calculated SOF	Risk guideline	
Organic Solvent Fire in Tank 241-C-106	7.1 E-01 (7.1 E+01)	1.0 E-01 (1.0 E+01)	5.9 E-04 (5.9 E-02)	4.0 E-02 (4.0 E-00)	20.4	1	0.22	1	Extremely Unlikely
Organic Solvent Fire in Tank 241-AY-102	1.8 E-01 (1.8 E+01)	1.0 E-01 (1.0 E+01)	1.5 E-04 (1.5 E-02)	4.0 E-02 (4.0 E+00)	20.4	1	0.22	1	Extremely Unlikely

SOF = sum-of-fractions.

Table 3.4.2.9-3. Technical Safety Requirement Controls for Organic Solvent Fires. (2 sheets)

Control	Safety function	Comments
Ignition Controls with the following key elements: - Vehicle access within the tank farms shall be limited to vehicles whose fuel systems are protected from damage caused by potential collisions with tank structures - Physical barriers shall restrict vehicle access to those aboveground structures outside of tank farm boundaries that can direct liquids into waste tanks. Only vehicles with protected fuel systems shall be allowed within barriers - Speed limit controls - Stop intrusive activities in Tank 241-AY-102 and 241-C-106 when lightning is identified within a 80.5 km (50-mile) radius of the tank farm - Secure equipment in lowest position (e.g., lay down equipment elevated above the tanks and lower crane boom) if lightning is identified within 80.5 km (50 miles) of the tank farm - If flame cutting is performed in a location where debris from the cutting could fall on the waste surface in a tank, a device that is capable of catching and holding hot metal debris from the cutting shall be inserted between the cutting operation and the waste surface. This does not apply to sparks or slag from welding	Prevents vehicle fuel system damage in the event of collisions with tank structures within the tank farms. Outside the tank farms where vehicle access can not be controlled, prevent vehicle access to tank structures Pieces of hot metal from flame cutting may be capable of igniting salt cake or sludge that has entrained organic solvent in it	--
Transfer Controls with the following key elements: - All waste transfers shall be evaluated to ensure that the waste transfer does not create an organic solvent hazard outside the BIO safety envelope	Ensures that waste transfers do not create an organic solvent hazard outside the safety envelope established by the BIO (i.e., prevent creation of a new tank with an organic solvent hazard unless the required organic solvent controls are extended to the tank)	--
Emergency Preparedness with the following key element: - Response procedures	Mitigates the consequences of a fire	--

Table 3.4.2.9-3. Technical Safety Requirement Controls for Organic Solvent Fires. (2 sheets)

Control	Safety function	Comments
HEPA Filter Controls with the following key elements: - Periodic radiation survey to monitor HEPA filter loading - HEPA filter replacement per change-out criteria (i.e., ≤ 2 mSv/h [200 mrem/h]) - 241-AZ-702 HEME replacement per change-out criteria (8 mSv/h (800 mrem/h) - Periodic radiation survey to verify that 296-C-006 HEME/HEMF dose contribution is ≤ 1 mSv/h (100 mrem/h) at location of radiation detector that monitors the HEME/HEMF - Replacement of the 241-AZ-702 HEGA before the upstream HEPA filter has been replaced 20 times, or upon indication of degraded HEPA filter performance	Reduces consequences from a possible HEPA filter failure by limiting the inventory available	Applies to all HEPA filters and prefilters in the ventilation system
- Aerosol test upon installation (AWF 241-AZ-702) - Periodic aerosol test (AWF 241-AZ-702)	HEPA filter efficiency testing protects the HEGA filter source term assumption in the analysis	Applies to HEPA filters upstream of the HEGA filters

HEGA = high-efficiency gas adsorber
HEME = high-efficiency mist eliminator
HEMF = high-efficiency metal filter
HEPA = high-efficiency particulate air (filter).

Table 3.4.2.9-4. Defense-in-Depth Controls for Organic Solvent Fire.

Control	Safety function	Comments
Vehicle positioning spotters	Spotters provide additional level of control in positioning cranes/vehicles	Reduces probability of analyzed accident
Tank farm fences	Provide line of demarcation within which Ignition Control Program key elements related to vehicle fuel systems must be met	Fence gates are typically closed and locked
HEPA filter replacement typically performed at 1 mSv/h (100 mrem/h)	Limits inventory available for release, limits dose rate to workers in vicinity of the filters	Doses from HEPA filters were minimal compared to the overall doses

HEPA = high-efficiency particulate air (filter).

This page intentionally left blank.

3.4.2.10 In-Tank Fuel Fire/Deflagration. This accident addresses the possibility that a combustible fuel is inadvertently added to either Tank 241-AY-102 or Tank 241-C-106 during or after sluicing operations. This scenario is the same as in Section 5.3.2.16 of the main text of the BIO except that the material risk can include AWF solids. Even though increased consequences could occur, the control strategy is prevention. The controls are not specifically derived from the consequences and would not be changed by variations in the magnitude of the calculated consequences.

3.4.2.10.1 Scenario Development. In assessing the results of fuel spills into tanks, two possible scenarios are considered. The first scenario is a pool fire in which the fuel burns on the surface of the waste (Section 3.4.2.9, Organic Solvent Fire). The second scenario is a headspace deflagration in which vaporized fuel causes the headspace volume to reach the lower flammability limit, and the vaporized fuel is ignited (Section 3.4.2.8, Flammable Gas Deflagration). The difference between the two scenarios is the physical state of the fuel when ignition occurs.

Accident Scenarios Without Controls. The fuel spills are initiated by vehicle accidents and by propylene glycol spills into the tank. The vehicle accident would be an impact into an above grade structure (e.g., a riser) and the subsequent spill of the vehicle fuel into the structure. Because many of the aboveground tank structures have penetrations into the tank, the fuel is assumed to leak into the tank and also spill into the pits. The case where the spill is contained (and catches fire) in the aboveground structure is addressed in Section 3.4.2.4 (Fire in Contaminated Area). The maximum amount of vehicle fuel available in an accident is 227 L (60 gal) (i.e., the capacity of the largest fuel tank on any vehicle that enters the tank farms). Some of the spilled fuel could enter the waste tank through the damaged structure, while some of the fuel would vaporize as the fuel drained into the tank. Section 5.3.2.16 of the main text of the BIO describes the vehicle accident scenario.

The propylene glycol spills could be initiated by a failure associated with either the pit or process chiller. The pit chiller is associated with the Tank 241-AY-102 pump pit and is designed to provide cool air to the pit to remove heat generated by the pump. The process chiller is associated with the ventilation systems of Tank 241-C-106. Before sluicing, the process chiller will be used to precool the waste and minimize the possibility of releasing steam from the waste after sluicing operations begin. After sluicing operations have begun, the process chiller will be used on the recirculation line of the new ventilation system as part of the moisture removal system to prevent the formation of fog in the tank.

The propylene glycol from either chiller would not present a significant fire or deflagration hazard in the tank. Propylene glycol is present in the chillers as a solution in water (46% propylene glycol and 54% water). Therefore, the possibility that a propylene glycol spill results in a fire inside either Tank 241-AY-102 or Tank 241-C-106 is not addressed further.

Accident Frequency Without Controls. The frequency category assigned is "extremely unlikely" based on the analysis in Section 3.4.2.4.

Accident Scenario With Controls. The multiple control strategy specified in Section 3.4.2.10.5 prevents the accident by controlling the fuel and ignition sources. Because the accident is prevented by the specified controls, no release scenarios are postulated for the case with controls. The failure of the multiple control strategy is considered a beyond design basis event.

Accident Frequency With Controls. No release scenarios are postulated assuming success of the credited controls. Therefore, no accident frequency is developed for this case.

3.4.2.10.2 Source Term Analysis.

Accident Source Term Without Controls. The source term for the vehicle fuel pool fire is bounded by the source term calculated for the organic solvent pool fire in Section 3.4.2.9 and is not repeated here.

Accident Source Term With Controls. No release scenarios are postulated assuming success of the credited controls; therefore, no source term is developed for this case.

3.4.2.10.3 Consequence Analysis. As discussed in the scenario development, the potential radiological and toxicological consequences associated with a vehicle fuel spill into a tank are bounded by the consequences of an organic solvent pool fire consequences presented in Section 3.4.2.9 and are outlined in Tables 3.4.2.9-1 and 3.4.2.9-2.

3.4.2.10.4 Comparison with Guidelines. It can be seen from Table 3.4.2.9-2 that the consequences of a pool fire are outside all onsite evaluation guidelines. However, the pool fire is within all offsite evaluation guidelines.

3.4.2.10.5 Summary of Safety Structures, Systems, and Components and Technical Safety Requirements.

Safety Structures, Systems, and Components. No Safety-Class or Safety-Significant structures, systems, and components have been identified to prevent or mitigate this accident.

Technical Safety Requirement Controls. Because the potential consequences identified for this accident exceed evaluation guidelines, TSR controls have been developed. The controls specified in Section 3.4.2.9.5 for the organic solvent fire are designed to prevent the inadvertent spill of vehicle fuel into a tank, provide emergency response if necessary, and limit the release from the high-efficiency particulate air filters. These controls apply to both a fuel fire and deflagration.

To avoid repeating controls and possible inconsistencies, the reader is referred to Section 3.4.2.9.5 for the TSR controls for this accident.

Defense-in-Depth. As with the TSR controls, several features that provide Defense-in-Depth are listed in Section 3.4.2.9.5.

3.4.2.11 Tank Bump. A tank bump could occur if operations related to the tanks produce any of the following conditions without compensating measures being taken.

- Removal of supernate from a tank and the resulting reduction in liquid level will reduce the hydrostatic pressure in the sludge layer and consequently decrease the saturation temperature of the interstitial solution (primarily concerns Tank 241-C-106).
- Increasing the heat load in a tank by adding insoluble solids to Tank 241-AY-102 and/or operating high power pumps.
- Increase of the sludge layer thickness either by fluffing of the current sludge or adding additional sludge (concerns Tank 241-AY-102).
- Inadequately cooling the tank for an extended period (concerns both tanks).

The first three conditions may occur during the WRSS transfer of material from Tank 241-C-106 to Tank 241-AY-102. The fourth condition could occur as the result of ventilation system failure or operational error. The presence of an organic oil film on the top of the supernate layer, due to mobilization of the organics currently dispersed in the waste, could impede evaporative cooling of the tank.

Tank 241-C-106 is one of several SSTs with the proper initial conditions conducive to a tank bump. Tank 241-C-106 contains 746,000 L (197,000 gal) (about 1.75 m [69 in.]) of soft sludge with a total heat load estimated at 38.8 kW (132,400 Btu/h) (as of June 1994) (HNF-SD-W320-ER-004, *Project W-320 SAR and Process Control Thermal Analysis*). The total heat load and the heat load distribution determine the peak temperature in the sludge. If this peak sludge temperature exceeds the local saturation temperature, the potential for a tank bump will increase. Tank 241-C-106 is on the High Heat Watch List and must receive periodic water additions to maintain the waste temperatures within allowable limits. Currently, forced ventilation with added water to promote thermal conductivity and evaporative cooling is used for heat removal.

Tank 241-AY-102, a double-shell tank, contains 121,000 L (30,000 gal) (about 305 mm [12 in.]) of sludge and 3.1 million L (812,000 gal) of supernate for a total waste depth of about 9.1 m (30.0 ft). The estimated heat load of Tank 241-AY-102 is 13.2 kW (45,000 Btu/h) (HNF-SD-W320-ER-004).

The waste transferred into Tank 241-AY-102 will add to that tank's heat load and cause an increase in the sludge temperatures. In addition, the sludge from Tank 241-C-106 will probably not settle back immediately to its original volume, but will initially remain "fluffed" to some greater volume and depth. This increased volume will increase the distance over which heat transfer must take place and further increase the temperature in the sludge. The amount of fluffing (the fluff factor) to be expected is uncertain. A fluff factor of 2 is being assumed as bounding (HNF-SD-W320-ER-004). Thermal analyses have been performed for waste addition to Tank 241-AY-102 to confirm adequate heat removal capability. Analysis results indicate that

waste temperatures will remain below saturation for waste transfers of up to 0.6 m (2 ft). The analysis assumes 4.3 m^3/min (150 ft^3/min) flow to the cooling channels under the tank floor, and operable primary ventilation (these assumptions are valid for both 241-A-702 and 241-AZ-702). After the first campaign to transfer 0.6 m (2 ft) of sludge from Tank 241-C-106, temperatures will not reach their new steady-state values for some time (about 300 days for 0.6 m (2 ft) of sludge transfer) (HNF-SD-W320-ER-004). Real-time temperature data on the tank contents will be entered into a thermal model in the form of an initial temperature history to project thermal response of the sludge. The results will be used to calibrate the model, establish hold times between transfers, and further evaluate cooling requirements for sludge transfers.

The analysis presented here uses a mixture of AWF solids and AWF liquids to develop consequences. A similar mixture of SST solids and SST liquids would have a much lower ULD, thus consequences from an SST tank bump are bounded by the tank bump in Tank 241-AY-102. Therefore, for purposes of establishing the need for controls, only analysis specific to Tank 241-AY-102 is performed.

3.4.2.11.1 Scenario Development. The WRSS accident scenario assumes that heat removal is insufficient to maintain acceptable operating temperatures and that saturation temperature has been reached. This condition is postulated to have been reached as a result of any one or a combination of the four conditions discussed in Section 3.4.2.11.

The analysis uses the following assumptions. Details of the analysis and scenario choice are described in HNF-SD-WM-CN-098, *Consequences of a Postulated Tank Bump Related to Project W-320.*

- In the tank bump analysis (WHC-SD-WM-CN-022), 1.45 m (4.75 ft) of sludge was assumed to have been transferred from Tank 241-C-106 to Tank 241-AY-102, producing a total sludge depth of 3.35 m (11 ft) in Tank 241-AY-102 (fluff factor of 2). The total pool depth was assumed to be maintained at 9.1 m (30 ft).

- For loss of ventilation, a "best estimate" temperature profile (corresponding to the thermal model for 1.45 m [4.75 ft] of sludge and a fluffing factor of 2) was assumed for the sludge layer corresponding to conditions leading to an initial bump caused by inadequate cooling (loss of primary and annulus ventilation) for the heat load over an extended period.

- Only saturated sludge becomes involved in a tank bump. Therefore, the severity of the tank bump is directly related to the volume of saturated sludge. The tank sludge is expected to first reach saturation temperature in the bottom center of the tank. The fraction of sludge that is saturated in this situation is much less than 1. In this case, where the tank is a subject of ongoing operations and is constantly monitored, a tank bump is assumed to be initiated when such a temperature profile exists.

- The vent path configuration that allowed the greatest aerosol release and therefore produced the greatest consequence to onsite and offsite receptors was used.

- No credit was taken for condensation of steam in the supernate layer overlying the sludge.

Accident Scenario Without Controls. For the accident scenario without controls, it was postulated that active ventilation would be lost for an indefinite period. The temperature of the tank waste near the bottom of the tank was modeled to exceed local saturation temperature.

Accident Frequency Without Controls. The frequency of a tank bump without controls was categorized as "anticipated."

Accident Scenario With Controls. The controls selected for the tank bump scenario are preventive and are presented in Section 3.4.2.11.5. The controls prevent tank waste from reaching saturation temperatures, thereby precluding a tank bump.

Accident Frequency With Controls. With the controls identified in Section 3.4.2.11.5, the accident is assumed to be prevented.

3.4.2.11.2 Source Term Analysis. The Tank 241-AY-102 waste conditions were modeled with the GOTH thermal hydraulics computer code, a transient computer program used to model multi-phase flow (WHC-SD-WM-CN-022). The GOTH code presented the mass of waste released (the release fraction and inventory at risk are included in the code). The waste types assumed for radiological dose consequence calculations were AWF tank liquids and solids. The waste types assumed for toxicological consequences were double-shell tank liquids (the toxicological sum-of-fractions for double-shell tank liquids includes AWF liquids) and double-shell tank solids (the toxicological sum-of-fractions for double-shell tank solids includes AWF solids). These are bounding assumptions for a release due to a steam bump in either Tank 241-AY-102 or Tank 241-C-106.

Accident Source Term Without Controls. GOTH model estimates showed that for the worst case tank vent configuration, a tank bump in Tank 241-AY-102 would eject 35.4 kg (78 lbm) of solids and 280 kg (620 lbm) of liquids directly out of the pit drains along with 180 kg (400 lbm) of steam over about 3 seconds (WHC-SD-WM-CN-022). Because this is such a short-duration release, the steam release would initially form a cloud over the release point with the waste material suspended as an aerosol. The loading of this much waste material in this amount of steam would amount to more than a kilogram per cubic meter. Even with some turbulent mixing with air, this is far too great a load to be sustained for even a short time. The material would rapidly fall out of the cloud until the air loading decreased to some short-term sustainable value. The GOTH simulation also shows 770 kg (1700 lbm) of steam issuing from the tank vent at the same time the release from the pit occurs. This magnitude of pressure pulse will easily blow out the filters (HEPA, HEGA and HEME) in the ventilation system. No credit was taken for cover blocks being in place because they would have little effect on the material released.

The maximum sustainable loading of an aerosol mist in air is normally assumed to be 100 mg/m^3 (6.23x10^{-6} lb/ft^3) (ANSI N46.1, *American National Standard - Guidance for Defining Safety-Related Features of Nuclear Fuel Cycle Facilities*). However, because the air loading here is for a fast transient condition until turbulent mixing with the surrounding air and enough evaporation of the water portion of the liquid release can occur, 10 times this value (1 g/m^3) (6.23x10^{-5} lb/ft^3) is assumed for conservatism. For the WRSS accident, all the transportable aerosol that could affect a downwind receptor is assumed to be carried by the released steam at a transient loading of 1 g/m^3 (6.23x10^{-5} lb/ft^3).

The maximum total steam release for any scenario considered was 950 kg (2100 lbm). Assuming the liquid-solid ratio described above (280 kg [620 lbm] liquid and 35.4 kg [78 lbm] solids), the net transportable releases are 9.63 x 10^{-2} L (2.54 x 10^{-3} gal) of solids and 1.17 L (0.31 gal) of liquids (HNF-SD-WM-CN-098). The 1 g/m^3 (6.23x10^{-6} lb/ft^3)initial loading includes the water portion of the liquid waste component that would rapidly evaporate during transport leaving only the dissolved solids. Therefore, in this case, the usual maximum air loading of 100 mg/m^3 (6.23x10^{-6} lb/ft^3) at the receptor cannot be used to assume additional fallout.

The analysis showed the tank headspace pressure to reach a peak of about 28 kPa gauge (4.1 psig) in Tank 241-AY-102 (WHC-SD-WM-CN-022). More available headspace and lower hydrostatic head would result in a lower peak pressure in Tank 241-C-106 than Tank 241-AY-102.

The pressure pulse of 28 Kpa gauge (4.1 psig) is approximately 10 times the minimum pressure required for high-efficiency particulate air filter blow out. Therefore, the filters (HEPA, HEME, and HEGA) in the AY/AZ farm ventilation systems should be expected to fail during a tank bump. Thus, the consequences of the tank bump are increased by the dose contribution from filter blow out and subsequent unfiltered release. However, the dose contribution of filter blow out and unfiltered release is insignificant compared to the dose consequences of the tank bump itself. For example, the 241-A-702 ventilation system represents the bounding case for Tank 241-AY-102 (refer to Sections 3.4.2.2 and 3.4.2.3). For the 241-A-702 system, the combined onsite consequence of 2.1 E-02 Sv for the filter failure and unfiltered release is two orders of magnitude lower than the 1.9 Sv onsite consequences of a tank bump. In addition, the initial headspace air with its normal loading of waste material is assumed to be displaced out of the tank by the steam release. The dose contribution resulting from this effect is negligible compared to the dose consequences of the bump itself (WHC-SD-WM-CN-043, *Tank Bump Consequence Analysis*).

Accident Source Term With Controls. No source term with controls was derived because the accident controls are preventative.

3.4.2.11.3 Consequence Analysis. The onsite and offsite dose consequences and toxicological exposures were determined using the method discussed in Section 3.4.1.

Analysis Results.

Consequences Without Controls. The radiological and toxicological consequences of this release are presented in Table 3.4.2.11-1.

Consequences With Controls. No consequences with controls were derived because the accident controls are preventative.

3.4.2.11.4 Comparison to Guidelines. Table 3.4.2.11-1 compares the tank bump consequences to risk guidelines. Onsite consequences without controls for both radiological and toxicological exposure are above risk guidelines. Offsite radiological consequences are also above risk guidelines. Therefore, to protect the onsite worker and members of the public from both radiological and toxicological hazards of a tank bump, the event must be controlled.

Note that increasing the amount of sludge transferred beyond the 1.45 m (4.75 ft) assumed in the bump simulation from WHC-SD-WM-CN-022 that was used as the basis of this analysis would increase the severity of the bump and the consequent releases. The scenario analyzed here already produces consequences above the onsite and offsite boundary risk guidelines. Increasing the amount of sludge transferred and hence increasing the potential severity of the accident would, therefore, have no effect on the conclusions.

3.4.2.11.5 Summary of Safety Structures, Systems, and Components and Technical Safety Requirement Controls.

Safety Structures, Systems, and Components. Because both the onsite and offsite guidelines are exceeded, Safety-Class structures, systems, and components are required (Table 3.4.2.11-2).

The primary and annulus ventilation systems for Tank 241-AY-102 remove a major portion of the heat generated in the primary tank. The safety function provides the means to maintain tank waste below local steam saturation temperature. The safety function of both these systems is to maintain the tank waste temperatures below the saturation temperature. The ventilation system for Tank 241-C-106 removes heat from the waste and its safety function is also to maintain the tank waste temperatures below the saturation temperature.

Technical Safety Requirement Controls. The TSR controls selected to prevent tank bumps are listed in Table 3.4.2.11-3. These controls establish tank waste temperature limits, and ensure that waste transfers do not create in-tank conditions conducive to bump initiation.

Tank 241-C-106. Tank waste temperature limits are set for Tank 241-C-106 to prevent the waste in the tank from reaching saturation temperatures. The temperature limits will be lowered as WRSS operations proceed, since the hydraulic head, and thus the saturation temperature, is reduced from waste transfer.

The liquid level in Tank 241-C-106 will be maintained at a pre-determined level for the first two increments (defined as 0.3 m of sludge) of waste transfer, to avoid affecting the sub-cooling provided by the hydraulic head of

the liquid in the tank. The control of the liquid level in Tank 241-C-106 can not be monitored using the ENRAF liquid level instrument because this instrument will be shut down during sluicing operations to avoid damage by the sluice stream. Therefore, the control uses the lower liquid level sensor on the submersible slurry pump. The minimum liquid cover/hydraulic head control requirement will be eliminated after the first sluicing campaign as discussed in HNF-SD-W320-ER-004.

Tank 241-AY-102. To prevent the transfer of heat generating sludge to Tank 241-AY-102 beyond its cooling capacity, a step-wise transfer of waste is required. Waste will be transferred in three campaigns, each consisting of two transfer increments of 0.3 m (1 ft.). Each transfer increment will be followed by a hold period to monitor waste parameters and thermal response. Transfer increments can comprise one or several batches of waste. The sluicing batch durations will be limited by two factors: (1) the mass flow meter totalizer reading (estimated volume of sludge transferred), and (2) a maximum time duration established based on mass flow meter instrument detection level. These two values will be established in the WRSS process control plan. The values may be subsequently modified based on WRSS operational experience.

During the monitoring period between transfer increments, the volume of Tank 241-C-106 sludge transferred to Tank 241-AY-102 will be calculated using ENRAF densitometer density profile data and Tank 241-AY-102 grab samples analysis results. This estimate will be compared with the mass flow meter totalizer readings. The monitoring period duration may also be extended until adequate confidence is established in the estimated sludge volume/heat load transferred.

The sludge volume transferred from Tank 241-C-106 to Tank 241-AY-102 is monitored in real time using the mass flow meter located in pit 241-AY-02A. This solids volume transferred is used to estimate the approximate heat load transferred. After each sluicing campaign, the heat load transfer monitoring is accomplished by performing a heat balance on each of the two tanks to refine the thermal analysis baseline and verify that subsequent sluicing operations can be accomplished safely.

Defense-in-Depth. Existing prevention and mitigation features support Defense-in-Depth as shown in Table 3.4.2.11-4.

Table 3.4.2.11-1. Consequences of a Tank Bump Assuming No Controls.

Accident	Consequences								Frequency
	Radiological, Sv (rem)				Toxicological				
	Onsite		Offsite		Onsite		Offsite		
	Calculated dose	Risk guideline	Calculated dose	Risk guideline	Calculated SOF	Risk guideline	Calculated SOF	Risk guideline	
Tank Bump in 241-AY-102	1.9 E+00 (1.9 E+02)	5.0 E-03 (5.0 E-01)	1.6 E-03 (1.6 E-01)	1.0 E-03 (1.0 E-01)	3,900	1	0.11	1	Anticipated

SOF = sum-of-fractions.

Table 3.4.2.11-2. Safety Structures, Systems, and Components for Tank Bumps.

Control	Safety classification		Safety function	Comments
	SC	SS		
Tank 241-AY-102 primary ventilation system	X	--	Provides the means to maintain tank waste below local saturation temperature	If saturation temperatures are reached a tank bump could occur
Tank 241-AY-102 annulus ventilation system	X	--	Prevents Tank 241-AY-102 from reaching the saturation temperature	If saturation temperatures are reached a tank bump could occur
Tank 241-C-106 ventilation system	X	--	Provides the means to maintain tank waste below local saturation temperature	If saturation temperatures are reached a tank bump could occur

SC = Safety-Class.
SS = Safety-Significant.

Table 3.4.2.11-3. Technical Safety Requirement Controls for Tank Bumps. (2 sheets)

Control	Safety function	Comments
SST Waste Temperature Controls with the following tank waste temperature limit: For Tank 241-C-106, ≤ 205 °F (96 °C)	Ensures that tank waste temperatures at which a tank bump or steam release event could occur are not reached	The specific waste temperature limit for Tank 241-C-106 applies prior to sluicing operations
DST and AWF Tank Waste Temperature Controls with the following tank waste temperature limits: For Tank 241-AY-102, ≤ 195 °F (91 °C), for all waste levels OR ≤ 195 °F (91 °C) in the top 4.6 m (15 ft) of the waste AND ≤ 215 °F (102 °C) in the waste below 4.6 m (15 ft)	Ensures that tank waste temperatures at which a tank bump or steam release event could occur are not reached	The specific waste temperature limits for Tank 241-AY-102 applies prior to, during, and after sluicing operations
Tank 241-AY-102 Annulus Ventilation System - Operability	Ensures operability of the Tank 241-AY-102 annulus ventilation system	Applies to Tank 241-AY-102 after 0.6 m (2 ft) of sludge from Tank 241-C-106 has been transferred
Transfer Controls with the following key elements: - Incremental waste transfer with material balance after each sluicing batch of 12 hours maximum duration during transfer operations, including total material transferred and solids loading calculation - All waste transfers shall be evaluated to ensure that the waste transfer does not create a tank bump hazard outside the BIO safety envelope	Ensures that conditions in Tank 241-AY-102 remain within analyzed envelope at all times Ensures that the waste transfer does not create a tank bump hazard outside the safety envelope (i.e., prevent creation of a new tank with a tank bump hazard unless the required tank bump controls are extended to the tank)	During the monitoring period, volume of Tank 241-C-106 transferred will be calculated using the ENRAF densitometer and Tank 241-AY-102 grab samples analysis results The sludge transferred from Tank 241-C-106 is monitored real time using the mass flow meter on the transfer line
Process Instrumentation and Measuring and Test Equipment with the following key element: - Equipment must be calibrated and properly maintained	Ensures instrumentation used to monitor temperature, tank levels, and transfer line flow is maintained	--
Ventilation Controls with the following key element: - Provide adequate cooling capacity for Tank 241-AY-102, through the primary and annulus ventilation systems, after 0.6 m (2 ft.) of sludge is transferred into the tank	Ensures that adequate cooling capacity is available to keep waste in Tank-241-AY-102 from reaching saturation temperature for each sluicing campaign	--

Table 3.4.2.11-3. Technical Safety Requirement Controls for Tank Bumps. (2 sheets)

Control	Safety function	Comments
Tank 241-AY-102 Primary Ventilation System	Provides adequate cooling capacity in Tank 241-AY-102 in conjunction with Annulus Ventilation System	Applies to Tank 241-AY-102 after 0.6 m (2 ft) of sludge from Tank 241-C-106 has been transferred
Tank 241-C-106 Waste Temperature Controls: - Predict saturation temperatures at the bottom of Tank 241-C-106. Use predicted height of the waste throughout the incremental transfer and periodically monitor the waste temperature	Ensures that tank waste temperatures at which a tank bump or steam release event could occur are not reached	--
- During the first two 0.3 m (1.0 ft) transfer increments, the liquid level established before start of each sluicing increment will be maintained throughout the increment	Prevents a steam flash in Tank 241-C-106 resulting from loss of hydraulic head	

AWF = aging waste facility.
DST = double-shell tank.
SST = single-shell tank.
TSR = Technical Safety Requirement.

Table 3.4.2.11-4. Defense-in-Depth Controls for Tank Bumps.

Control	Safety function	Comments
The airlift circulators in Tank 241-AY-102 will be disabled prior to the start of sluicing operations	Prevents inadvertent transfer of heat generating materials to Tank 241-C-106 and prevents ALC initiation of tank bump in Tank 241-AY-102	Transfer of large amounts of sludge to Tank 241-C-106 via the sluice line could increase the heat load in Tank 241-C-106 to greater than the analyzed range, possibly causing a tank bump in Tank 241-C-106
Communications between the Tank 241-C-106 and Tank 241-AY-102 control trailers will be maintained during sluicing operations	Coordinates operations at the two tanks and to detect flow imbalances or other unexpected conditions	--
Pump pit and sluice pit cover blocks (including removable plugs) will be in place prior to any sluicing operations and prior to enabling of the sluice or slurry pumps	Provides containment and confinement function in the event of a tank bump or spray leak within the pit, and limit onsite and offsite radiological and toxicological exposures	Camera installation through the cover plug camera port is allowed
The transfer pumps associated with the sluice and slurry lines must be administratively locked out except as necessary for actual sluicing operations and maintenance	Prevents inadvertent initiation of sluice or slurry flow which could result in a sludge configuration leading to tank bump conditions	Unexpected operation of a transfer pump when the transfer system is not in a proper lineup for sluicing operations could lead to an accidental release or injury to personnel
Emergency response plan/procedures	Protects onsite personnel and facility workers from unnecessary radiological and toxicological exposure in the event of a tank bump	--

ALC = air lift circulator.

This page intentionally left blank.

3.4.2.12 Liner Breach Caused by Steam Between the Steel Liner and Concrete Shell in Tank 241-C-106. A liner breach caused by steam under the liner can cause a rapid steam pressurization of the tank headspace, similar to that caused by a tank bump. A liner breach is a safety concern because of the potential for a release of aerosolized waste into the environment and/or an insult to the environment from tank leakage.

Water could get between the steel liner of Tank 241-C-106 and the concrete shell by four methods. These include water in the concrete itself, spillage during liner filling, rainfall during construction, or a leak. Water from the concrete, from spillage, or from rainfall, is assumed to have vaporized in the 1970s, when the tank temperatures were at their highest.

During sluicing operations, a stream of supernate may be directed at the carbon steel tank liner. This supernate jet could strike an area of the tank liner that has been weakened by corrosion, thus causing a leak. Other leak possibilities exist (they are listed in the WRSS hazard analysis [see Section 3.2]), but the same consequences are yielded. Raw water or supernate could leak under the bottom of the liner and the grout that covers the asphalt layer over the concrete base of the tank. This liquid could become trapped if the liner were to expand during a temperature increase. The heated asphalt under the liner provides another method of entrapment.

The current measured temperature in Tank 241-C-106 is about 63 °C (145 °F). Thermal modeling indicates that the maximum temperature in the bottom center of Tank 241-C-106 is about 109 °C (228 °F). Before sluicing, the tank will be chilled to about 107 °C (224 °F) (HNF-SD-W320-ER-004). The saturation temperature of water is pressure dependent. Hydrostatic head (i.e., the pressure caused by the weight of the waste) for the total waste height (including sludge) increases local pressure and, therefore, local saturation temperature. At the current level of waste, the saturation temperature needed under the liner to create steam is about 110 °C (230 °F). The saturation temperature of water at atmospheric pressure is 100 °C (212 °F). Waste temperature rising above the saturation temperature would create a steam bubble between the liner and the concrete base of the tank. A sufficiently energetic steam bubble could breach the liner and possibly initiate a tank bump. This liner breach would eject steam containing contamination into both the atmosphere and the soil.

The tank bump scenario is specifically addressed in Section 3.4.2.11; the supporting documents for that analysis are WHC-SD-WM-CN-022 and WHC-SD-WM-CN-043. The tank bump scenario covers the response of steam travelling through waste in more detail. The response of steam created by a liner breach would be similar to the bump.

Drying waste will experience a temperature peak caused by decreased conductivity, but the waste will eventually cool down as radioactive isotopes decay. If enough waste is removed, the remaining waste temperatures will remain below the saturation temperature of water, eliminating the possibility of a liner breach.

Water entrapment under the liner is only a concern in single-shell tanks. Tank 241-C-106 is a SST containing 746,000 L (197,000 gal) (about 1.75 m [69 in.]) of soft sludge with a total heat load estimated at 38.8 kW (132,400 Btu/h) as of June 1994. This tank is on the high heat watch list and must have periodic water additions to maintain the waste temperatures within allowable limits by means of evaporative cooling using active ventilation.

On January 28, 1965, a steam release event occurred in Tank 241-A-105. After the event, it was determined that the bottom of the steel liner was displaced from the concrete pad and bulged upward to a maximum of 2.6 m (8.5 ft). It was determined that the cause of the event was an amount of liquid between the liner and concrete reached the saturation temperature, converted to steam, and pushed the liner upward. Subsequently, this displacement caused the liner to fail and leak some amount of waste to the space between the liner and the concrete (Bander et al. 1994, *Assessment of Possibility of Deformation of the Bottom Steel Liner of Tank 241-C-106*).

3.4.2.12.1 Scenario Development. Engineered heat removal methods are implemented when heat removal by natural conduction to the soil is insufficient to maintain acceptable operating temperatures. The most common heat removal method is active ventilation of the tank headspace. An initiating event is the result of equipment failures or operational errors that result in impaired heat transfer from the sludge to the supernate or heat transfer from the supernate to the tank ventilation system. The other initiating event is operational errors that increase the heat generation capacity of the waste to above the heat removal capacity of the tank.

Tank waste temperature begins to rise when the engineered heat removal mechanism (e.g., active ventilation) is lost or certain operational errors occur. The rate of the temperature increase depends on the heat generation rate and the quantity of waste involved.

The following assumptions were made to ensure conservative results (HNF-SD-W320-CN-004, *Consequence Analysis of a Liner Breach Due to Steam Under the Liner*).

1. A total of 1.25 m (4.1 ft) of sludge has been transferred from Tank 241-C-106 to Tank 241-AY-102 with a total sludge depth of 0.79 m (2.6 ft) left in Tank 241-C-106. This value was chosen based on analysis discussed in HNF-SD-W320-ER-004, which shows that without ventilation, 0.79 m (2.6 ft) of dry waste in Tank 241-C-106 will result in temperatures above saturation. Less remaining waste would result in lower temperatures; however, temperature models would be necessary to determine what level of waste would yield temperatures below saturation.

2. A small amount of liquid (just under 26.5 L [7 gal]) is trapped under the liner, turns to steam, and expands the liner until just before breaching. If the steam cools, a 1400 ft^3 void is created under the liner (Bander et al. 1994).

3. Water fills the void completely.

4. The tank reaches the saturation temperature of water and the trapped water under the liner turns to steam and breaches the liner. A differential pressure of 22.1 kPa (3.2 psi) will breach the liner. This pressure differential could be created by the presence of about 26.5 L (7 gal) of water under the liner that is converted to steam (Bander, et al. 1994).

5. The liner breach causes a pressure drop. Saturation temperatures drop with the pressure drop and a certain amount of liquid under the liner flashes to steam and is released out of the liner breach. This amount can be determined using energy conservation.

6. All steam released is assumed to be involved in the accident, with no effect from condensation. Condensation would have a minimal effect because the supernate is at approximately the same temperature as the sludge.

7. If a liner breach occurred during sluicing or before dry-out of the waste, the consequences would be lower than if the event happens after sluicing is finished and the remaining waste material has dried out. This is because the moist waste would have a greater density, and consequently the source term would be lowered.

8. The worst case source term is 100% dry solids, with the maximum amount of water trapped under the liner. The waste moisture content and level have little effect on the consequences.

Accident Scenario Without Controls. For the accident scenario without controls, the temperature of water trapped under the liner of Tank 241-C-106 was postulated to rise above local saturation.

Accident Frequency Without Controls. The frequency without controls of a liner breach was categorized as "anticipated" in the hazards analysis.

Accident Scenario With Controls. The controls selected for the liner breach scenario are preventive and are presented in Section 3.4.2.12.5. These controls prevent the water trapped beneath the liner of Tank 241-C-106 from reaching saturation temperatures, thereby precluding the liner breach event. Should a rising temperature trend be detected, potential heat sources (e.g., pumps) would be eliminated and waste cooling techniques (e.g., ventilation, water addition) would be restored or initiated.

Accident Frequency With Controls. With the controls identified for the liner breach scenario in Section 3.4.2.12.5, the accident is prevented.

3.4.2.12.2 Source Term Analysis. The amount of steam released into Tank 241-C-106 during both the liner breach and the resultant steam flash was calculated to find the entrained waste release. The waste types assumed for radiological dose consequence calculations were single-shell tank solids. The waste types assumed for toxicological consequences were SST solids.

Accident Source Term Without Controls. A liner breach in Tank 241-C-106 would release 0.47 L (0.12 gal) of respirable solids (HNF-SD-W320-CN-004). The entire volume of steam created is assumed to be released during the event.

As noted previously, the release of steam from under the liner is similar to a tank bump event. Therefore, the source term model used in HNF-SD-W320-CN-004 is based on the tank bump calculations in WHC-SD-WM-CN-043 and WHC-SD-WM-CN-022 (Section 3.4.2.11).

Damage to the ventilation system filters should be expected during a liner breach event. The dose contributions of filter blow out and subsequent unfiltered release are added to the dose consequences of the steam release itself. The contribution of the filter blow out and unfiltered release are included in the consequences presented in Table 3.4.2.12-1, and are quantified in Section 3.4.2.2. and 3.4.2.3.

Accident Source Term With Controls. No source term with controls was derived because the accident controls are preventive.

3.4.2.12.3 Consequence Analysis. The onsite and offsite dose consequences and toxicological exposures were taken from HNF-SD-W320-CN-004.

Analysis Results.

Consequences Without Controls. The radiological and toxicological consequences of this release are presented in Table 3.4.2.12-1.

Consequences With Controls. No consequences with controls were derived because the accident controls are preventive.

Key Parameters and Assumptions. A major assumption includes the transportable and respirable releases. The transportable (able to reach a receptor at least 100 m downwind) and respirable source term for this accident was formulated by assuming all the steam issuing from the tank to be carrying a short-term transient air loading (1 g/m^3) of waste material (HNF-SD-W320-CN-004).

3.4.2.12.4 Comparison to Guidelines. Table 3.4.2.12-1 compares liner breach consequences to risk guidelines. Onsite consequences without controls for both radiological and toxicological exposure are above risk guidelines. Offsite radiological consequences are also above risk guidelines. To protect the onsite worker from both radiological and toxicological hazards of a liner breach, the event must be controlled.

3.4.2.12.5 Summary of Safety Structures, Systems, and Components and Technical Safety Requirement Controls.

Safety Structures, Systems, and Components. No safety structures, systems, and components were identified in this analysis.

Technical Safety Requirement Controls. The TSR controls selected to prevent a liner breach are listed in Table 3.4.2.12-2. These controls establish tank waste temperature limits, ensure operability of tank waste

temperature monitoring instrumentation, and ensure that waste transfers do not create in-tank conditions conducive to liner breach initiation. It should be noted that AC 5.26 provides a more restrictive temperature control on Tank 241-C-106 than is imposed by LCO 3.3.1. This is primarily because the sluicing operation will lower the local saturation temperature through removal of hydraulic head. In addition, an element has been added to the Administrative Controls (AC 5.26) to require a recovery plan if the temperature is exceeded.

Defense-in-Depth. Existing prevention and mitigation features support Defense-in-Depth, as shown in Table 3.4.2.12-3.

Table 3.4.2.12-1. Consequences of a Liner Breach Assuming No Controls.

Accident	Consequences								Frequency
	Radiological, Sv (rem)				Toxicological				
	Onsite		Offsite		Onsite		Offsite		
	Calculated dose*	Risk guideline	Calculated dose*	Risk guideline	Calculated SOF*	Risk guideline	Calculated SOF*	Risk guideline	
Liner Breach	5.4 E+00 (5.4 E+02)	5.0 E-03 (5.0 E-01)	4.4 E-03 4.4 E-01	1.0 E-03 (1.0 E-01)	2.6 E+04	1	8.2 E-01	1	Anticipated

SOF = sum-of-fractions.

* Note: The radiological and toxicological dose is based on consequences identified in 98-TWR-025, Contract No. DE-AC06-96RL13200 - Addendum To Safety Evaluation Report (SER) For Project W-320, Tank 241-C-106 Sluicing (Letter from J. D. Wagoner, RL, to R. D. Hanson, FDH), dated September 25, 1998.

Table 3.4.2.12-2. Technical Safety Requirement Controls for Liner Breaches.

Control	Safety function	Comments
SST Waste Temperature Controls with the following key element (prior to start of sluicing): - Temperature ≤ 205°F	Ensures that tank waste temperature monitoring system is operable and that temperatures at which a liner breach event could occur are not reached	Temperatures must be maintained below those that could result in creation of steam under the liner
Tank 241-C-106 Waste Temperature Controls with the following key element: - Establish temperature controls that are < T_{sat} for existing tank conditions (during and after sluicing)	Ensures that tank waste temperature monitoring system is operable and that temperatures at which a liner breach event could occur are not reached	The specific waste temperature limits will depend on the amount of waste remaining in Tank 241-C-106, since T_{sat} under the liner varies with pressure. Temperatures must be maintained below those that could result in creation of steam under the liner
Transfer Controls with the following key element: - All waste transfers will be evaluated to ensure that the waste transfer does not create a liner breach hazard outside the BIO safety envelope	Ensures that waste transfers do not create a liner breach hazard outside the safety envelope established by the BIO (i.e., prevent creation of a new tank with a liner breach hazard unless the required liner breach controls are extended to the tank)	--
Process Instrumentation and Measuring and Test Equipment with the following key element: - Equipment must be calibrated and properly maintained	Ensures instrumentation used to monitor temperature, tank levels, and transfer line flow is maintained	--

AWF = Aging Waste Facility.
DST = double-shell tank.
SST = single-shell tank.
TSR = Technical Safety Requirement.

Table 3.4.2.12-3. Defense-in-Depth Controls for Liner Breaches.

Control	Safety function	Comments
Active ventilation or other heat removal mechanisms will be maintained	Maintains sludge and supernatant temperatures below the required control levels for tanks with a potential for a liner breach	--
Pump pit and sluice pit cover blocks (including removable plugs) will be in place whenever the conditions for initiation of a liner breach are present (i.e., known leaking liner, active ventilation system down indefinitely)	Provides containment and confinement function in the event of a liner breach	WHC-SD-WM-CN-043 quantifies the reduction of a tank bump, similar to a liner breach, in consequences provided by cover blocks
Emergency response plan/ procedures	Protects onsite personnel and facility workers from unnecessary radiological and toxicological exposure in the event of a liner breach	--
A material balance will be performed after each sluicing batch of 12 hours maximum duration during transfer operations, including total material transferred and solids loading calculation	Ensures that the introduction of tank solids into the sluice line is ≤ 10%	An inadvertent deviation of Tank 241-C-106 conditions outside the analyzed envelope could result in a liner breach
Syphon protection is provided on the slurry distributor and the submersible sluice pump discharge line within Tank 241-AY-102	Prevents establishing a syphon when slurry pumps or sluice pumps are shut down	A syphon, if established, could drain back from Tank 241-AY-102 to Tank 241-C-106 and could result in overfilling Tank 241-C-106, allowing liquid to leak under the liner
Material balance including level monitoring to identify leakage into the liner	Tank 241-AY-102 level measurement and slurry line mass flow measurement	--
Raw water is metered	Used in coordination with material balance and 241-AY-102 level monitoring, detects large raw water leakages	--
Communication between Tank 241-C-106 and Tank 241-AY-102 control trailers will be maintained during sluicing operations	Coordinates operations at the two tanks and detects flow imbalances or other unexpected conditions (e.g., power failure)	--
Sluicing controls	Sluicing controls are in the process control plan. During the early stages of sluicing, the sluice stream will not be directed at the waste near the walls	During the later stages of sluicing, the sluice stream will be directed toward the wall to ensure effective recovery of the Tank 241-C-106 waste
Design feature - The stiff hose is engineered to maintain integrity	Prevents sluicer hose from breaking off and causing liner breach	--
Design feature - Positive mechanical stops are provided to limit nozzle travel to less than 25° above horizontal	Prevents the sluice stream from impinging on an area above the steel liner. Prevents sluice from leaking into the liner from top of liner	--

WHC-SD-WM-CN-043, 1996, Tank Bump Consequence Analysis, Rev. 2, Westinghouse Hanford Company, Richland, Washington.

3.4.2.13 Subsurface Leak Remaining Subsurface. This accident category refers to low-energy subsurface leaks that remain subsurface and are not visually detected. A subsurface leak that forms a surface pool and is visually detectable is analyzed in Section 3.4.2.14. The analyzed leak is similar to the subsurface leak remaining subsurface scenario analyzed in the main text of the BIO. However, the presence of the berm over the transfer lines in the WRSS makes the worst case leak geometry different from that described in Section 5.3.2.7 of the main text of the BIO. The direct dose from waste in the berm is much larger than the direct doses for below ground waste calculated in the main text, which is primarily caused by the long path through the soil that attenuates the direct radiation. The shielding provided by the soil is not as great as in the WRSS analysis. Secondary factors that also changed doses compared to those in the main text were a larger transfer flow rate for WRSS and a different waste for the source term for WRSS (Section 3.4.1).

Possible causes of a subsurface leak identified in the hazard analysis include the following:

- Failure of an encased transfer line during sluicing operations (caused by corrosion or aging)
- Excavation accident that damages a waste transfer line
- Leak from a cracked or broken pump or valve or a related transfer pit failure
- Structural failure of a tank wall or bottom.

Tank structural failure could result in a large subsurface leak, but the subsurface plume would have no immediate consequences to facility workers or offsite receptors because of the large amount of soil shielding above the liquid in the tanks; therefore, this scenario was not analyzed. Leaks into a transfer pit are analyzed in Section 3.4.2.16. Excavation accidents are analyzed in Section 3.4.2.17. Therefore, failure of an encased waste transfer line was chosen as the worst case subsurface leak and is analyzed in the following subsections.

3.4.2.13.1 Scenario Development. The worst case subsurface leak remaining subsurface accident scenario is a subsurface leak from a waste transfer line during WRSS operations. The following assumptions are used to calculate dose consequences for the scenario with and without controls.

- The leak occurs in the slurry line because the heavy solid loading will make doses higher in the slurry line than in the sluicing line.
- The burial depth of the slurry transfer line varies depending on location, but the worst consequences are obtained if the leak occurs near Tank 241-C-106 where the line is buried just below the surface and is bermed.
- The berm near Tank 241-C-106 is 0.76 m (2.5 ft) high and 2.44 m (8 ft) wide.

- The leak remains below the surface (not visually detectable) and no airborne radioactive or toxic materials are released.
- The total radiological dose to the onsite receptor is comprised of direct (line of sight), skyshine, and associated bremstrahlung radiation components for 12 hours, which is consistent with the method presented in the main text of the BIO (Section 5.3.1.1.1).
- Uncontaminated soil cover of 152.4 mm (6 in.) remains as shielding over the leak area.
- Leaking waste completely saturates a region of the soil around the leak site.
- The soil void fraction is 40%.
- The soil density is 1.6 g/cm^3 (100 lb/ft^3).
- The slurry line waste density is 1.4 g/cm^3 (87 lb/ft^3).
- The worst case leak geometry is a disk representing a leak into the soil under the berm or a rectangular region saturating a section of the berm to within 152.4 mm (6 in.) of the surface.

Accident Scenario Without Controls. The following parameters were used in the accident scenario without controls.

- The transfer line flow rate is 28.4 L/s (450 gpm).
- A leak rate of 5% of the total flow (a higher leak rate would become the subsurface leak resulting in a pool [Section 3.4.2.14] or the spray leak from an underground waste transfer line [Section 3.4.2.17]).
- The duration of the leak is assumed to be 12 hours (maximum sluicing batch duration).
- The source term is two parts AWF tank liquids and one part AWF tank solids (Section 3.4.1 for the radionuclide composition of these sources) corresponding to the worst case slurry line source term discussed in Section 3.4.1.

Accident Frequency Without Controls. The frequency category for a subsurface leak accident without controls is "anticipated." Pipeline failures occurred during earlier operations and are documented in the Hanford Site occurrence reporting database.

Accident Scenario With Controls. The accident scenario with controls is the same as that without controls except that the solids loading in the source term is assumed to be 90% solids from Tank 241-C-106 (instead of 100% solids from Tank 241-AY-102). The source term is 2 parts SST liquid, 18 parts AWF tank liquid, 9 parts SST solid, and 1 part AWF tank solid. (See Section 3.4.1 for a discussion of the mitigated [or with controls] source term.)

Accident Frequency With Controls. The frequency of a pipe failure resulting from aging or corrosion is reduced to "unlikely" by taking credit for the encasement as a second and independent barrier to corrosion or aging induced failure. The failure rate for the primary transfer line is estimated to be 3.3×10^{-9} leaks/m/h (1×10^{-9} leaks/ft/h) (WHC-IP-0690, *Safety Analysis and Regulation Manual*). The length of transfer pipe is 0.5 km (0.3 mi). This gives a 1.4×10^{-2}/yr failure rate for the primary pipe. The failure rate for both primary and secondary pipes is assumed to be lowered to place the overall frequency in the "unlikely" category.

3.4.2.13.2 Source Term Analysis. The source term calculations for this event are documented in HNF-SD-WM-CN-104, *Calculation Notes for an Underground Leak which Remains Underground*.

Source Term Without Controls. The total volume of material released in the assumed 12-hour leak is 60,570 L (16,000 gal). The worst case geometry was found to be a saturated length of the berm because of the increased direct dose from waste in the berm compared to an underground "disk" model. The mixture of isotopes present in the release without controls is presented in HNF-SD-WM-CN-104. No airborne radioactive or toxic materials are released because the leak is subsurface.

Source Term With Controls. The total volume of material released and worst case geometry in the scenario with controls is the same as for the scenario without controls. The mixture of isotopes present in the release with controls is discussed in HNF-SD-WM-CN-104 and reflects a smaller percentage of AWF tank solids loading, as discussed in Section 3.4.1.

3.4.2.13.3 Consequence Analysis. This section presents the dose consequences associated with the radiation field created by the subsurface leak. For each assumed geometry, radiation dose rates are calculated for the onsite receptor (a receptor located at 100 m [328 ft] from the leak point). Line-of-sight and bremstrahlung and skyshine dose rate contributions were calculated using the ISO-PC (WHC-SD-WM-UM-030, *ISO-PC Version 1.98 - User's Guide*) and MICROSKYSHINE (Grove 1987, *MICROSKYSHINE*) computer codes, respectively. Details of the calculations are presented in HNF-SD-WM-CN-104. The worst case geometry with controls and without controls was found to be a saturated section of the berm. The receptor dose starts after the full subsurface plume has been created. The dose to the offsite receptor is insignificant because of the large distance between the source and receptor.

Consequence Without Controls. Dose to the onsite receptor is 0.011 Sv (1.1 rem) in the scenario without controls. No significant toxicological consequences or offsite radiological consequences would occur (Table 3.4.2.13-1).

Consequences With Controls. Dose to the onsite receptor in the accident scenario with controls is 0.01 Sv (1.0 rem). No significant toxicological consequences or offsite radiological consequences would occur (Table 3.4.2.13-2).

3.4.2.13.4 Comparison With Guidelines. The dose to the onsite receptor in the scenario without controls, 0.011 Sv (1.1 rem), is above the onsite risk

guideline (0.005 Sv [0.5 rem]) for an "anticipated" event. The dose to the onsite receptor with controls, 0.01 Sv (1.0 rem), is below the onsite risk guideline (0.05 Sv [5 rem]) for an "unlikely" event. No significant toxicological consequences or offsite radiological consequences would occur.

3.4.2.13.5 Summary of Safety Classification and Technical Safety Requirement Controls. Safety classification, TSR controls, and Defense-in-Depth features for the subsurface leak accident are summarized in the following paragraphs.

Safety Structures, Systems, and Components. The secondary piping is credited as a Safety-Significant component that provides a redundant leak barrier that reduces the likelihood of a leak resulting from corrosion or aging. The transfer leak detection systems and tank level detection systems (shown in Table 3.4.2.13-3) have also been designated as Safety-Significant for protection of the facility worker.

Technical Safety Requirement Controls. Technical Safety Requirement controls are in place to prevent or mitigate a subsurface leak. Table 3.4.2.13-4 summarizes these controls. The TSRs include excavation controls, transfer controls, encasement seal loop controls, transfer leak detection systems, and transfer pump administrative lock controls.

Defense-in-Depth. Table 3.4.2.13-5 summarizes the Defense-in-Depth features applicable to the subsurface leak accident. Defense-in-Depth controls include pressure/leak testing, operator training, operating procedures, seismic shutdown switches and emergency response.

Table 3.4.2.13-1. Summary Consequences and Frequencies for a Subsurface Leak Remaining Subsurface Without Controls.

Accident	Consequences								Frequency
	Radiological, Sv (rem)				Toxicological				
	Onsite		Offsite		Onsite		Offsite		
	Calculated dose	Risk guideline	Calculated dose	Risk guideline	Calculated SOF	Risk guideline	Calculated SOF	Risk guideline	
Subsurface Leak Remaining Subsurface	1.1 E-02 (1.1 E+00)	5.0 E-03 (5.0 E-01)	N/A	1.0 E-03 (1.0 E-01)	N/A	1	N/A	1	Anticipated

N/A = not applicable.
SOF = sum-of-fractions.

Table 3.4.2.13-2. Summary Consequences and Frequencies for a Subsurface Leak Remaining Subsurface With Controls.

Accident	Consequences								Frequency
	Radiological, Sv (rem)				Toxicological				
	Onsite		Offsite		Onsite		Offsite		
	Calculated dose	Risk guideline	Calculated dose	Risk guideline	Calculated SOF	Risk guideline	Calculated SOF	Risk guideline	
Subsurface Leak Remaining Subsurface	1.0 E-02 (1.0 E+00)	5.0 E-02 (5.0 E+00)	N/A	1.0 E-02 (1.0 E+00)	N/A	1	N/A	1	Unlikely

N/A = not applicable.
SOF = sum-of-fractions.

Table 3.4.2.13-3. Safety Structures, Systems, and Components for Subsurface Leaks Remaining Subsurface.

Structure, system, or component	Safety classification		Safety function	Comments
	SC	SS		
Waste transfer pipe-in-pipe encasement	--	X	Ensure that a leak in the primary waste transfer system piping is directed to a waste transfer-associated structure	Mitigates frequency of leaks
Transfer leak detection systems	--	X	Detects leaks in transfer-associated structures and activates an alarm, leading to operator shutdown of the transfer	Prevents/mitigates significant facility worker hazard
Tank level detection systems	--	X	Provide indication of tank waste level to support performance of periodic material balance during waste transfers to detect leaks or misroutes	Prevents/mitigates significant facility worker hazard

SC = Safety-Class.
SS = Safety-Significant.

Table 3.4.2.13-4. Technical Safety Requirement Controls for Potential Subsurface Leaks Remaining Subsurface.

Control	Safety function	Comments
Transfer Leak Detection Systems	Detects leaks in transfer-associated structures and activates an alarm, leading to operator shutdown of the transfer	Ensure leak detector alarms are operable during transfer
Transfer Controls with the following key elements: - Material Balance after each sluicing batch of 12 hours maximum duration during transfer operations, including total material transferred and solids loading calculation - Configuration management: control of jumper and valve configuration - Establish communications between 241-C-106 and 241-AY-102 control room during sluicing operations - Transfer path verification - independent route verification during transfer setup	Prevent/mitigate significant facility worker hazard	--
Encasement Seal Loop Controls with the following key element: - Ensure the encasement seal loop valves are not in the closed position	Ensure that if the primary pipe leaks during waste transfer, the encasement will drain to the waste transfer-associated structure	--
Excavation control	Prevents pipe rupture caused by excavation activities	See Section 3.4.2.17
Transfer Pump Administrative Lock Controls	Eliminate motive force for unplanned transfers	--

Table 3.4.2.13-5. Defense-in-Depth Controls for Subsurface Leaks Remaining Subsurface.

Control	Function	Comments
Pressure/leak testing of transfer route before material transfer	Provides a greater level of assurance of transfer line integrity before actual transfer of waste	Enhanced NDE used for final welds
Operator training	Operations of facilities are performed by Hanford Site experienced crews with specific training in these activities	--
Operating procedures	Operations are performed to approved plant operating procedures	--
Emergency response plan/ procedures	Plans and procedures are in place to respond to emergency conditions	--
Seismic shutdown switches	Shut down transfer pumps upon detection of a seismic event	--

NDE = nondestructive examination.

3.4.2.14 Subsurface Leak Resulting in a Pool. A subsurface leak resulting in a pool accident is analyzed in Section 5.3.2.19 of the BIO main text. This analysis is different than that presented in the main text of the BIO because the flow rate of the WRSS pumps is greater than the flow rate used in the BIO, and the waste composition is different.

The specific hazardous conditions that can result in waste leaks directly to the soil surface are identified in the hazard analysis. A leak from the transfer line could result in washing away of the soil berm and the formation of a pool. The line could be uncovered by localized flooding and subsequently failed by corrosion or stress. In addition, an excavation accident could result in a break of a line and the formation of a pool.

3.4.2.14.1 Scenario Development. A breach of the slurry transfer line was selected as the bounding, representative accident for detailed analysis. Because an unconstrained pipe break permits waste to flow at 41 L/s (650 gpm), the scenario produces the largest surface pool. Local flooding is assumed to uncover the line during transfer operations, the line is breached, and the waste spills directly on the ground.

The unmitigated scenario assumes that the leak is detected after 7 hours, any onsite personnel are evacuated immediately, and the leak cannot be stopped until the pumping is terminated after 12 hours. This accident scenario was qualitatively assigned a frequency of "anticipated" (1 to 10^{-2}/year). The frequency was based on the tank farms operational history. The occurrence reporting database has documented previous related pipe failures.

The mitigated accident scenario assumes that the spilled slurry content is different from the unmitigated slurry because it more realistically reflects the average mixed content of Tank 241-AY-102 (Section 3.4.1). The operator more promptly detects the leak, the pump is turned off, and any onsite personnel are immediately evacuated. The frequency of the mitigated accident scenario is taken to be the same as the unmitigated accident scenario.

3.4.2.14.2 Source Term Analysis. The composition, ULD, and sum-of-fractions for the slurry mixtures used in this analysis are detailed in Section 3.4.1. Details of the supporting source term calculations are documented in HNF-SD-WM-CN-110, *Consequences of a Radioactive Surface Pool Resulting From Waste Transfer Operations Between Tanks 241-C-106 and 241-AY-102*.

The waste is assumed to flow onto the ground at the maximum capacity of the pump, 41 L/s (650 gpm). Therefore, in 12 hours, 12 x 60 x 60 x 41 = 1,771,600 L (468,000 gal) are spilled onto the ground. Soil conditions are assumed to be such that the growing pool remains a free-standing liquid for 12 hours. This maximizes the spread of the pool and creates the largest surface area available for aerodynamic resuspension by the wind. A "spreading factor" (i.e., surface area of soil affected divided by the spill volume) equal to 8.7 per linear foot is used in this analysis, consistent with WHC-SD-WM-CN-049, *Calculation Notes for Surface Leak Resulting in Pool, TWRS FSAR Accident Analysis.* A final pool size of 127 m (417 ft) radius and area of 5.06 x 10^4 m^2 (5.45 x 10^5 ft^2) is calculated to form.

A resuspension flux (from DOE-HDBK-3010-94, equal to 2×10^{-10} kg/m^2) is used to estimate the rate that aerosols are generated by the wind. The waste density is 1.4 kg/L, so 1.4×10^{-10} L/m^2-s is generated by the wind while the pool is liquid. The unmitigated aerosol amount released during these 12 hours is 0.156 L. The peak release rate, 7.2×10^{-6} (L/s), occurs at the end of pool formation.

After the transfer pump is shut off, the waste will soak into the soil, leaving entrained salts and entrained solids behind as surface contamination. The contaminated soil is assumed to be immediately available as dry soil for resuspension by the wind. The respirable release fraction, 8.4×10^{-5}, is taken from Section 3.2.4.4 in DOE-HDBK-3010-94. This release takes place in the 12- to 24-hour period. The unmitigated amount of contaminated soil that is resuspended during these 12 hours is 148.7 L (39 gal). The peak release rate, 2×10^{-3} (L/s), occurs at the onset of soil resuspension. Note that the offsite consequences will be dominated by the material resuspended from the contaminated soil phase.

As a limiting case to determine the maximum available operator response time, without consequences exceeding risk guidelines, a detection time of 43 minutes was used to calculate mitigated consequences. This corresponds to 106,000 L (28,000 gal) of material released. Actual operator response time is expected to be significantly less than 43 minutes. In this case, the pool only grows to a radius of 31 m (102 ft) and reaches a final surface area of 3.03×10^3 m^2. The amount of material released during pool formation is limited to 3.4×10^{-2} L at a peak rate of 4.3×10^{-7} (L/s). The amount of material released as contaminated soil is less than 0.9 L (0.2 gal), at a peak rate of 1.2×10^{-5} (L/s).

3.4.2.14.3 Consequence Analysis. Table 3.4.2.14-1 summarizes the consequences of spills without control and Table 3.4.2.14-2 summarizes the consequences of spills with controls. The unmitigated scenario at a worst case composition has a ULD equal to 5.6×10^5 Sv/L, a sum-of-fractions multiplier (onsite) equal to 1.3×10^4 s/L, and a sum-of-fractions multiplier (offsite) equal to 68 s/L. The mitigated scenario uses a reasonable mixture of the liquid and solid source terms in Tank 241-C-106 and Tank 241-AY-102 and has a smaller ULD equal to 1.2×10^5 Sv/L, a sum-of-fractions multiplier (onsite) equal to 1.9×10^4 s/L, and a sum-of-fractions (offsite) multiplier equal to 40 s/L.

The radiological dose consequences without controls are 3.0 Sv (3.0×10^2 rem) for the onsite receptor, which includes shine from the growing pool, and 8.0×10^{-1} Sv (8.0×10^1 rem) for the offsite receptor. The toxicological sum-of-fractions are 0.09 and 0.13 for the onsite and offsite receptors, respectively.

The radiological dose consequences with controls are 1.3×10^{-2} Sv (1.3 rem) for the onsite receptor, which includes shine from the growing pool, and 1.0×10^{-3} Sv (1.0×10^{-1} rem) for the offsite receptor. The toxicological sum-of-fractions are 8.3×10^{-3} and 5.0×10^{-4} for the onsite and offsite receptors, respectively.

3.4.2.14.4 Comparison to Guidelines. Table 3.4.2.14-1 provides the radiological and toxicological consequences of the accident scenario without controls. The radiological onsite and offsite consequences without controls are well above the risk guidelines. The toxicological sum-of-fractions for the risk guidelines is less than 1 (within risk guidelines) for both the onsite and offsite receptors.

Table 3.4.2.14-2 shows the results of the accident scenario with controls. The radiological onsite dose consequence is above the risk guideline; however, the offsite dose consequence meets the risk guideline. The toxicological sum-of-fractions for the risk guidelines is less than 1 (within risk guidelines) for both the onsite and offsite receptors.

3.4.2.14.5 Summary of Safety Structures, Systems, and Components and Technical Safety Requirement Controls. Tables 3.4.2.14-3 and 3.4.2.14-4 summarize the safety structures, systems, and components and TSR controls selected to prevent and mitigate subsurface leaks from the transfer lines used in the operations involving Tank 241-C-106 and Tank 241-AY-102. For each control, the safety function required is described. Clarifying comments are provided as necessary.

Safety Structures, Systems, and Components. For pipe-in-pipe encased transfer lines, the encasements were designated Safety-Class. The safety function of the encasements is to contain and route waste leaked from the primary line back to transfer structures (e.g., process pits). The transfer line leak detection system has been designated as Safety-Class to prevent pit overflows during transfers. The system prevents pit overflows by alarming and alerting operators to shut down the transfer pump.

Tank level detection systems were designated as Safety-Significant to support the performance of periodic material balances during transfers. Material balances are important to back up leak detectors and limit the amount of waste that can be released to the environment.

Technical Safety Requirement Controls. A transfer leak detection system control is required to stop the transfer if a leak is found, and to prevent transfer-associated structures from overflowing.

A waste transfer control program was developed to limit the potential consequences of leaks from subsurface transfer lines. Material balances are required as part of the transfer control program to limit the volume of waste potentially leaked to the soil column (without surfacing) as a backup detection for leaks into encased lines that drain back to transfer structures containing Safety-Class pit leak detectors. Material balances are required to be performed after each sluicing batch of 12 hours maximum duration during the transfer. The material balances are especially important; over an extended period, the skyshine from pools smaller than those analyzed in the representative accident can give integrated doses approaching the evaluation guideline for the onsite receptor. Other key elements of the waste transfer control program include configuration management and independent route verification during transfer. These key elements are required to prevent misroutes into potentially compromised transfer lines.

Establishing communication between the Tank 241-C-106 and Tank 241-AY-102 control rooms during transfers is another key element of the transfer control. Detection of a leak allows for the transfer to be stopped to minimize the amount of leakage. Table 3.4.2.14-4 describes the TSR controls for subsurface leaks resulting in pools.

A TSR control also is necessary to ensure that the appropriate emergency response procedures are implemented when a surface waste pool is detected. Emergency response plans for a waste leak shall include response procedures with a graded approach based on the magnitude of the leak to protect the offsite public, onsite worker, and facility worker (e.g., transfer termination, leakage containment and removal, and site evacuation).

Defense-in-Depth. Table 3.4.2.14-5 summarizes hardware and existing tank farm procedures that provide Defense-in-Depth protection against leaks from buried or bermed transfer lines. These include a walkdown of the transfer lines, encasement leak detectors, seismic shutdown switches, and flow rate monitoring.

Table 3.4.2.14-1. Summary of Consequences and Frequencies for Subsurface Leak Resulting in a Pool without Controls.

Accident	Consequences								Frequency
	Radiological, Sv (rem)				Toxicological				
	Onsite*		Offsite**		Onsite*		Offsite**		
	Calculated dose	Risk guideline	Calculated dose	Risk guideline	Calculated SOF	Risk guideline	Calculated SOF	Risk guideline	
Subsurface leak resulting in a pool	3.0 E+00 (3.0 E+02)	5.0 E-03 (5.0 E-01)	8.0 E-01 (8.0 E+01)	1.0 E-03 (1.0 E-01)	0.09	1	0.13	1	Anticipated

*Exposure time of 7 hours.
**Exposure time of 24 hours.
SOF = sum-of-fractions.

Table 3.4.2.14-2. Summary of Consequences and Frequencies for Subsurface Leak Resulting in a Pool with Controls.

Accident	Consequences								Frequency
	Radiological, Sv (rem)				Toxicological				
	Onsite*		Offsite*		Onsite*		Offsite*		
	Calculated dose	Risk guideline	Calculated dose	Risk guideline	Calculated SOF	Risk guideline	Calculated SOF	Risk guideline	
Subsurface Leak Resulting in a Pool	1.3 E-02 (1.3 E+00)	5.0 E-03 (5.0 E-01)	1.0 E-03 (1.0 E-01)	1.0 E-03 (1.0 E-01)	8.3 E-03	1	5.0 E-04	1	Anticipated

*Exposure time of 43 minutes, which is longer than expected response time.
SOF = sum-of-fractions.

Table 3.4.2.14-3. Safety Structures, Systems, and Components for Subsurface Leaks Resulting in Pools.

Control	Safety classification		Safety function	Comments
	SC	SS		
Waste transfer pipe-in-pipe encasement	X	--	Ensure that a leak in the primary waste transfer system piping is contained and directed to a waste transfer-associated structure	See controls for surface leak resulting in pools
Transfer leak detection systems	X	--	Detects leaks in transfer-associated structures and activates an alarm, leading to operator shutdown of the transfer	Ensure leak detector alarms are operable during transfers
Tank level detection systems	--	X	Provide indication of waste level to support performance of periodic material balances during waste transfers to detect waste leaks or misroutes	Applicable to Tanks 241-C-106 and 241-AY-102

SC = Safety-Class.
SS = Safety-Significant.

Table 3.4.2.14-4. Technical Safety Requirement Controls for Subsurface Leaks Resulting in Pools.

Control	Safety function	Comments
Transfer leak detection systems	Detects leaks in transfer-associated structures and activates an alarm, leading to operator shutdown of the transfer	Ensure leak detector alarms are operable during transfers
Transfer Controls with the following key elements: - Establish communication between control rooms for Tank 241-C-106 and Tank 241-AY-102 during sluicing operations - Material balance after each sluicing batch of 12 hours maximum duration during transfer operations, including total material transferred and solids loading calculation - Configuration management - Independent route verification during transfer setup	 Stops transfer to limit the volume of waste leaked Detects waste transfer line leaks and misalignments; limit volume of waste leaked Prevents misalignments Prevents misrouting	--
Emergency Preparedness with the following key element: - Response procedures	Mitigates consequences to onsite personnel	--

Table 3.4.2.14-5. Defense-in-Depth Controls for Subsurface Leaks Resulting in Pools.

Control	Safety function	Comments
Walkdowns are performed once/shift to detect surface leaks from transfer line	Provides backup to material balance for leaks that might surface	--
WRSS pipe-encased transfer lines are equipped with encasement leak detectors	Detect leak during transfer, provide backup to pit leak detection	Can also be used as Safety-Class substitute for pit leak detection
Monitor flow rate	Provides evidence of a leak. If flow data indicates leakage, stop the transfer and determine the cause	Necessary for material balance
Seismic shutdown switches	Shut down transfer pumps upon detection of a seismic event	

WRSS = Waste retrieval sluicing system.

3.4.2.15 Surface Leak Resulting in a Pool. A subsurface leak resulting in a pool is analyzed in Section 5.3.2.18 of the BIO main text. This analysis is different than that analyzed in the BIO main text because the pump flow rate of the WRSS pumps is higher than that used in the BIO, and the waste composition is different. The consequences of this accident are bounded by the subsurface leak resulting in a pool analyzed in Section 3.4.2.14 of this addendum.

3.4.2.15.1 Scenario Development. The breach of the slurry transfer line was selected as the bounding representative accident for detailed analysis of surface pools. Because an unconstrained pipe break permits waste to flow at 41 L/s (650 gpm), the subsurface-originating leak produces the largest surface pool in 12 hours (Section 3.4.2.14).

Surface-originating leaks, such as an overflow of the pit with its cover block on, would constrain the waste flow to less than 28.4 L/s (450 gpm) and a smaller surface pool would form within the 12 hours.

The frequency category of the accident without controls is determined on the basis of the likelihood of the initiating event. Tank farm operating experience indicates that waste leaks into process pits are "anticipated" events. Between 1972 and 1996, the occurrence reporting database includes five accounts of waste being misrouted through compromised transfer paths into process pits. The frequency of the accident with controls is the same as the accident without controls.

3.4.2.15.2 Source Term Analysis. See Section 3.4.2.14.2.

3.4.2.15.3 Consequence Analysis. Surface leak consequences are bounded by the consequences postulated for subsurface leaks (Section 3.4.2.14.3).

3.4.2.15.4 Comparison to Guidelines. See Table 3.4.2.14-1 in Section 3.4.2.14.

3.4.2.15.5 Summary of Safety Structures, Systems, and Components and Technical Safety Requirement Controls. Tables 3.4.2.15-1 and 3.4.2.15-2 summarize the safety structures, systems, and components and TSR controls selected to prevent or mitigate surface pool leaks throughout the TWRS. For each safety structure, system, and component and TSR control, the safety function required is described in Chapter 4.0 of this addendum.

Technical Safety Requirement Controls. Technical safety requirement controls are listed in Table 3.4.2.15-2 and detail relating to their safety function are listed in HNF-SD-WM-TSR-006, *Tank Waste Remediation System Technical Safety Requirements*, and Section 5 of this addendum. A key element for communications between the control locations for Tank 241-AY-102 and Tank 241-C-106 was added to AC 5.12, Transfer Controls, to mitigate this accident.

Defense-in-Depth Controls. Table 3.4.2.15-3 identifies the Defense-in-Depth controls.

Table 3.4.2.15-1. Safety Structures, Systems, and Components for Surface Leak Resulting in Pool.

Control	Safety classification		Safety function	Comments
	SC	SS		
Transfer leak detection system	X	--	Detects leaks in transfer-associated structures and activates an alarm, leading to operator shutdown of the transfer	Ensure leak detector alarms are operable during transfers
Transfer System Covers	--	X	Limit release of aerosols generated by splatter inside the pit*; limit shine and skyshine dose to onsite receptor	Pit structure and covers provide confinement safety function. Pit structure also required to support the pit covers
Tank level detection systems	--	X	Supports periodic material balances during transfers	See material balance TSR AC (next table)
Primary tank leak detection system	X		Provides indication of infiltration into the annulus of Tank 241-AY-102	--
Transfer line pipe in pipe encasement	X	--	Provide secondary confinement for leaks from primary line; route leak from primary line back to process pit*	--
Back flow preventers	--	X	Prevent back flow of waste	Safety significant to prevent general contamination of service water supply systems, e.g., the tanker truck

* Includes valve pits, central and feed pump pits, sluice pits, leak detection pits, annulus pump pits, flush pits, catch tank pump pits, diversion boxes, vault pits, vent station nozzle pit.

AC = Administrative Control.
SC = Safety-Class.
SS = Safety-Significant.
SST = single-shell tank.
TSR = Technical Safety Requirement.

Table 3.4.2.15-2. Technical Safety Requirement Controls for Surface Leak Resulting in Pool.

Control	Safety function	Comments
Transfer system covers	Limit release of aerosols generated by splatter inside the pit; limit shine and skyshine dose to onsite receptor	Ensures pits physically connected to transfer route are covered during transfers
Transfer Leak Detection Systems	Detects leaks in transfer-associated structures and activates an alarm, leading to operator shutdown of the transfer	Ensure leak detector alarms are operable during transfers
Primary Tank Leak Detection System	Ensures primary tank leak detection systems on tanks physically connected to the transfer route are operable to detect misroutes into the annulus of Tank 241-AY-102	--
Transfer Controls with the following key elements: - Material balance after each sluicing batch of 12 hours maximum duration during transfer operations, including total material transferred and solids loading calculation - Configuration management: control of jumper and valve configuration - Establish communications between 241-C-106 and 241-AY-102 control room during sluicing operations - Cap/blank nozzles when not in use - Vehicle restrictions around transfer lines	Provides confirmation of analysis assumptions Prevents misroutes of waste and prevents jumpers from being grossly misaligned or from falling off during transfers Detects a waste transfer line leak; limits volume of waste leaked Prevents leak through open nozzles Ensures that the transfer line is protected from vehicle collisions that could result in a loss of integrity of the primary and encasement pipes	High flow rate leaks into pits can overflow the pits before transfer pumps can be manually shut down after leak detector alarm activates (if pit drain plugged)
Emergency Preparedness with the following key element: - Response procedures	Provides response procedures to mitigate structure overflow.	--
Excavation Control Program	Prevents pipe rupture caused by excavation activities.	See Section 3.4.2.17
Transfer Pump Administrative Lock Controls with the following key element: - The administrative lock of a waste transfer pump is demonstrated by removing and securing the motive force from the pump (e.g., electrical power, steam, water, or air)	Eliminate motive force for unplanned transfers	--
Transfer System Cover Removal Controls	Ensure structures physically connected to the transfer route are covered during transfers and provide compensatory measures for cover removal during transfers	--

Table 3.4.2.15-3. Defense-in-Depth Controls for Surface Leak Resulting in Pool.

Control	Safety function	Comments
Tank farms are visually surveyed by operators at least once a day	Surveys are performed to check for general problems (e.g., animal or water intrusion, etc.)	Surveys will detect surface pools of waste due to all causes. Surveys provide backup detection to leak detectors and material balances of water
Pit drains, where open	Allow leak to drain back to storage or catch tank; prevents overflow of pit to soil surface	High capacity pit drains are designed to accommodate maximum flow from the line
Encasement leak detectors	Detect leaks from primary line; limit leak volume	Redundant to interfacing pit leak detectors
Backflow preventers	Prevent backflow	--
Material balance after each sluicing batch of 12 hours maximum duration during transfer operations, including total material transferred and solids loading calculation	Limit duration of pool release	Material balances are typically performed by comparing level changes in the source and receipt tanks. The material balances will eventually discover the discrepancy caused by the pool leak
Seismic Shutdown switches	Shut down transfer pumps upon detection of a seismic event	--

3.4.2.16 Spray Leak from Structure. Only one spray leak accident related to WRSS operations has not been previously considered in the safety documentation for the main text of the BIO that is needed for WRSS analysis. This is an accident associated with the sluice line and slurry line flush connections located in pits over Tank 241-AY-102 (the highest elevation in the system). These connections are 5.1 cm (2 in.) diameter (nominal) pipes directed vertically upward under removable plugs in the pit cover blocks. The flush connections are normally closed by blanked jumper-type connectors. The flush line spray leak without controls assumes that the blank connector and the removable plug in the pit cover block have been removed so that the maximum system flow is directed vertically out the open 5.1 cm (2 in.) line into the air above the pit. The spray scenario with controls assumes that the removable plug is in place and the flow is directed against the underside of the pit cover block. Analysis has shown that maximum flow from the connection is not sufficient to lift the 159 kg (350 lb) removable plug.

3.4.2.16.1 Scenario Development. Two bounding accident scenarios have been chosen to represent the range of flush connector spray leaks that could occur in the sluice and pump pits over Tank 241-AY-102 during WRSS operations. These scenarios were analyzed for both the sluice line (high flow rate, low solids content) and the slurry return line (lower flow, high solids content) to determine worst case radiological and toxicological consequences. Details of the scenario development and analysis can be found in HNF-SD-WM-CN-102, *Radiological and Toxicological Consequences of a Worst-Case Spray Leak Related To Project W-320*.

Accident Scenario Without Controls. For the accident scenario without controls, the pit cover plug over the flush connection was assumed to be removed and the stream was assumed to be directed vertically upward. A slurry line release from pump pit 241-AY-02A and a sluice line release from sluice pit 241-AY-02E were evaluated to determine the worst case. Both flush connections are nominal 5.1 cm (2 in.) Schedule 40 pipe with an inside diameter of 5.25 cm (2.067 in.). In the case of the sluice line, the pump was assumed to be very close to the open flush connection and to be running at maximum speed (3056 rpm) with no discharge head. The maximum flow rate under these conditions is 41.0 L/s (650 gpm) with a discharge velocity of 19.9 m/s (65.3 ft/s) at the flush connection.

For the slurry line returning from Tank 241-C-106, the flush connection was assumed to be elevated 10.7 m (35.10 ft) higher than the slurry pump and the material was assumed to traverse about 600 m (656 yd) of pipe run. The flush connection actually is very close to but at a higher elevation than the slurry distribution nozzles in Tank 241-AY-102. The flow from the flush connection is therefore expected to be about the same as the normal 22.1 L/s (350 gpm) flow rate for the slurry line. For this analysis, however, the flow was conservatively assumed to be 28.4 L/s (450 gpm), or about 6.3 L/s (100 gpm) above the expected flow rate. The corresponding flow velocity from the flush connection was estimated to be 13.8 m/s (45.3 ft/s). Consistent with previous spray release analyses in the main text, the flush connection release was assumed to continue unabated for 24 hours.

Accident Frequency Without Controls. The accident frequency without controls is assigned based on the frequency of the initiating event. In this case, the initiating event is the failure or absence of the blank connector that closes off the flush connection. This causes a pressurized spray release during a transfer. The initiating event frequency is considered to be "anticipated" (1 event/year - 1.0×10^{-2} events/year) consistent with Section 5.3.2.20 of the main text of the BIO.

Accident Scenario With Controls. The conditions for the release scenario with controls are the same as assumed for the scenario without controls except that the removable plug in the pit cover block over the flush connection was assumed to be in place. A slurry line release in pump pit 241-AY-02A and a sluice line release in sluice pit 241-AY-02E were evaluated to determine the worst case. Consistent with WHC-SD-WM-CN-048, *Calculation Notes in Support of TWRS FSAR Spray Leak Accident Analysis*, the impact of the stream on the underside of the pit cover was assumed to saturate the air in the pit to the maximum sustainable air loading of 100 mg/m^3 (ANSI N46.1). The direct aerosol release was then assumed to be carried with the air displaced from the pit while the pit fills with slurry.

After the pit fills, the spray release ends and the slurry spreads over the ground above the pit as a pool. Pool releases are covered in Sections 3.4.2.14 and 3.4.2.15 and are outside the scope of this scenario. Pits 241-AY-02A and 241-AY-02E are equipped with 152mm (6in.) high-capacity drains emptying directly into Tank 241-AY-102. These drains are designed to handle the maximum flow from an open transfer line. In addition, both pits are equipped with leak detectors that alarm before the liquid reaches the levels of the high-capacity drains. For purposes of this bounding analysis, the high-capacity drains were assumed to be blocked and no credit was taken for the leak detectors. Because a negative pressure is maintained in the pits via the drains to Tank 241-AY-102, the consequences with the drains open would be far less severe.

Accident Frequency With Controls. The accident with controls frequency category is "anticipated." No safety structures, systems, and components or TSR controls are credited with reducing the likelihood of the initiating event.

3.4.2.16.2 Source Term Analysis. The method and detailed calculations used to determine the airborne aerosol release volumes in the accident analyses without and with controls are documented in HNF-SD-WM-CN-102. The following sections summarize the source term analyses.

Source Term Without Controls. Based on the total solids and liquids in both tanks, the solid and liquid components of the slurry circulating in both directions between Tank 241-C-106 and Tank 241-AY-102 in the sluice line and slurry line were determined to have the following best estimate compositions:

- **Liquids**—10% SST liquids and 90% AWF tank liquids
- **Solids**—90% SST solids and 10% AWF tank solids.

The sluice supernate being pumped from Tank 241-AY-102 to Tank 241-C-106 was assumed to contain 10% solids and 90% liquids, while the slurry being pumped back from Tank 241-C-106 was assumed to contain 33% solids and 67% liquids.

Two sources of aerosolization were evaluated: direct production by edge shear during slurry flow out of the nozzle and instability/shear stress at the surface of the liquid during the fall from its maximum height and impact on the ground (assumed to be a hard surface). The passage of the falling material through the air creates airflow patterns and turbulence that aid in suspension of the slurry. The sluice supernate and slurry return flows were investigated to determine the worst case.

The direct spray releases from the nozzle and from the pool formed on the ground were found to be negligible compared to the respirable releases produced by the fall and impact of the stream after reaching maximum height above the pit cover. The respirable aerosol release produced by the fall and impact of the liquid stream was calculated using the method recommended in DOE-HDBK-3010-94. Neglecting effects of air resistance, a vertical stream with an initial velocity of 19.9 m/s (65.3 ft/s) can reach a height of 20.2 m (66.3 ft). The airborne release fraction of slurry falling and impacting on a hard surface from a height of 20.2 m (66.3 ft) was determined to be 1.18×10^{-3}. As recommended in DOE-HDBK-3010-94 for this type of release, the respirable fraction was assumed to be one. The resulting respirable release rate is 4.84×10^{-2} L/s (0.77 gpm). The corresponding 12- and 24-hour respirable releases are 2.09×10^{3} L (552 gal) and 4.18×10^{3} L (1,100 gal).

Source Term With Controls. In the accident with controls, the pit cover provides an impaction surface that prevents aerosols from jetting directly into the atmosphere. The covers also create a relatively stagnant air volume that fosters agglomeration and rainout of aerosols within the pit. Aerosol removal also occurs as the result of condensation on the pit walls and the underside of the cover blocks. Aerosol is further removed from any air expelled from the pit through the cover block gaps because the leakage paths are tortuous and provide additional surfaces for impingement and condensation.

It was assumed (consistent with WHC-SD-WM-CN-048) that the impact of the stream on the underside of the pit cover saturates the air in the pit to the maximum sustainable air loading of 100 mg/m^3 (ANSI N46.1). The direct aerosol release is then carried with the air displaced from the pit as the pit fills with slurry. No credit was taken in this bounding analysis for the leak detectors or the 1.5 cm (6 in.) diameter high-capacity drains in the pits. Note that once the pit fills and overflows, the slurry will form a pool on the ground above. The releases from such a pool are addressed in Sections 3.4.2.14 and 3.4.2.15.

The sluice line flush connection is in pit 241-AY-02E with inside dimensions of 2.4 m x 1.8 m x 2.1 m (8 ft x 6 ft x 7 ft) giving an interior volume of 9.5 m^3 (336 ft^3). The total volume displaced while the pit is filling with slurry is this volume plus an additional 35% from heating of the air in the pit and addition of water vapor up to 100% relative humidity (WHC-SD-WM-CN-048). The total air volume displaced from the pit through crevices and small openings is then 12.8 m^3 (452 ft^3), implying a slurry aerosol release of 1.28 g (2.82×10^{-3} lbm). Using the sluice supernate

density (1.27 g/cm^3 [75.5 lbm/ft^3]) the equivalent slurry volume was calculated to be 1.01 x 10^{-3} L (2.67 x 10^{-4} gal). At a slurry addition rate of 41.0 L/s (65.2 gpm) or 4.10 x 10^{-2} m^3/s (1.45 ft^3/s), the pit will fill in 232 seconds or 3.86 minutes. No credit was taken for pit volume occupied by piping and machinery. The slurry aerosol release rate resulting from volume displacement is then 4.35 x 10^{-6} L/s (6.92 x 10^{-5} gpm).

The slurry line flush connection is in pit 241-AY-02A, which has inside dimensions of 3.7 m x 2.4 m x 1.5 m (12 ft x 8 ft x 5 ft) giving an interior volume of 13.6 m^3 (480 ft^3). The total volume displaced while the pit is filling with slurry is this volume plus an additional 35% from heating of the air in the pit and addition of water vapor up to 100% relative humidity (WHC-SD-WM-CN-048). The total air volume displaced out of the pit through crevices and small openings is 18.4 m^3 (650 ft^3), implying a slurry aerosol release of 1.84 g (4.06 x 10^{-3} lbm). Using the return slurry density (1.41 g/cm^3 [88.0 lbm/ft^3]), the equivalent slurry volume was calculated to be 1.30 x 10^{-3} L (3.43 x 10^{-4} gal). At a slurry addition rate of 28.4 L/s (452 gpm) or 2.84 x 10^{-2} m^3/s (1.00 ft^3/s), the pit will fill in 479 seconds or 7.98 minutes. No credit was taken for pit volume occupied by piping and machinery. The slurry aerosol release rate resulting from volume displacement is then 2.71 x 10^{-6} L/s.

3.4.2.16.3 Consequence Analysis. The onsite and offsite inhalation dose consequences and toxicological exposures were determined using the method discussed in Section 3.4.1. (See HNF-SD-WM-CN-102 for the detailed dose calculations.) The radiological and toxicological consequences for the accident scenarios without and with controls are summarized in Tables 3.4.2.16-1 and 3.4.2.16-2, respectively.

For the flush connection spray leak without controls, the sluice line release was found to be more limiting with the dose to the onsite receptor determined to be 150 Sv (15,000 rem) (50-year committed effective dose equivalent). The dose to the offsite receptor was found to be 0.21 Sv (21 rem). The toxicological sum-of-fractions for the onsite and offsite receptors were found to be 620 and 0.87, respectively.

For the flush connection spray leak with controls, the slurry return line release was found to be more limiting with the dose to the onsite receptor determined to be 1.8 x 10^{-3} Sv (0.18 rem). The dose to the offsite receptor was found to be 1.6 x 10^{-6} Sv (1.6 x 10^{-4} rem). The toxicological sum-of-fractions for the onsite and offsite receptors were found to be 5.8 x 10^{-2} and 1.1 x 10^{-4}, respectively.

Key Parameters and Assumptions—Accident Analysis Without Controls. The consequences for the accident scenario assuming no controls were calculated conservatively. The sensitivity of the analysis results to key parameters and assumptions used in the analyses are addressed in this section.

1. **Waste Flow Rate**—Maximum flow rate from the sluice line with the flush connection open was assumed to be 41.0 L/s (650 gpm) (maximum pump flow with no discharge head). Maximum flow rate from the slurry line with the flush connection open was assumed to be 28.4 L/s (450 gpm) (normal flow rate plus 6.29 L/s [100 gpm]). This

flow rate is considered to be very conservative for the slurry line because of the elevation of the flush connection above the slurry pump and the much longer run of pipe involved. The flow rate from the flush connection determines the upward flow velocity, hence the height to which the stream of liquid will rise before falling back to earth. The dominant release mechanism here is the aerosolization of the slurry by instability/shear stress at the surface of the liquid during the fall from maximum height and the effects of ground impact (assumed to be on a hard surface).

2. **Slurry Mixes and Unit Liter Doses**—Based on the amounts of the various waste components in Tank 241-C-106 and Tank 241-AY-102, the radiological ULDs and toxicological unit sum-of-fractions were based on a best estimate composition for the liquid and solid components of the sludge being circulated between the two tanks. In the sluice stream or the slurry stream, the liquid component was assumed to be 10% SST liquid and 90% AWF tank liquid while the solid component was assumed to be 90% SST solids and 10% AWF tank solids. The sluice stream from Tank 241-AY-102 to Tank 241-C-106 was assumed to be 10% solids and 90% liquids, while the slurry stream from Tank 241-C-106 to Tank 241-AY-102 was assumed to be 33% solids and 67% liquids. These are both maximum expected values for the amount of solids. Based on the sluice line composition (limiting from a release consequence point of view), using the ULD for pure AWF tank components increases the consequences by about a factor of 4. This would not be realistic, however, because uniformly mixing the contents of Tank 241-AY-102 would produce a slurry with only about 4% AWF tank solids.

3. **Release Mechanisms**—The dominant release mechanisms for the scenario without controls are the processes associated with the fall and impact of the slurry from the maximum height reached by the liquid stream issuing from the flush connection. These processes were modelled as recommended in DOE-HDBK-3010-94. Also as recommended, the respirable fraction for the aerosol release was assumed to be one. Releases from direct aerosolization at the exit nozzle were found to be negligible.

4. **Accident Duration**—The spray leak accident without controls is assumed to continue undetected for 24 hours. The total respirable aerosol release is directly proportional to the assumed accident duration. However, changing wind direction, wind speed, and atmospheric stability results in a logarithmically decreasing χ/Q' as a function of time. The decreasing χ/Q' value somewhat offsets the increase in release quantity over increasing accident durations. Therefore, the 24-hour dose to the offsite receptor was found to be only a factor of 2.6 times larger than for a 2-hour release at the same leak rate. The onsite receptor is assumed in the accident analysis to be exposed during the first 12 hours of the accident. The 12-hour onsite dose was found to be only 66% larger than the dose for a 2-hour exposure.

Key Parameters and Assumptions—Accident Analysis With Controls. The analysis with controls has the same sensitivities to accident duration and assumed solids content as the analysis without controls. Key parameters to which the analysis with controls is sensitive are discussed as follows.

- **Aerosol concentration of air expelled from the pit**—In the accident analysis with controls, the air displaced from the pit is assumed to be limited in aerosol concentration to a value of 100 mg/m^3 (6.24×10^{-6} lbm/ft^3), comparable to fog. The fog value provides an upper bound for the analysis. The dose is proportional to the assumed aerosol concentration.

- **Temperature and humidity change**—The analysis assuming controls estimates an initial volumetric expansion of the pit air based on a temperature and humidity change from -1 °C (30 °F), 15% relative humidity to 49 °C (120 °F), 100% relative humidity. From psychrometric charts, the volume expansion results in a pit air exchange equal to 35% of the pit volume. This volume expansion is conservative because the initial temperature of the pit at the start of the spray leak would normally be much higher than -1 °C (30 °F) and the final pit air temperature was set equal to the maximum expected waste temperature (i.e., no heat transfer into the walls of the pit was assumed).

- **Leak flow rate**—For this type of release, the covered pit would fill very quickly, limiting the total spray release to the waste entrained in the air displaced from the pit. The direct radiological consequences of the spray release are therefore independent of the leak flow rate. The maximum release rate, and therefore the toxicological consequences are proportional to the leak flow rate. In the scenario with controls, the slurry stream would normally be expected to return to Tank 241-AY-102 via the high capacity 15.2 cm (6 in.) drain in the pit producing very little release. For this analysis, however, the pit drain was assumed to become plugged. Once the pit fills and runs over, the accident becomes a surface pool release (analyzed in Section 3.4.2.17).

3.4.2.16.4 Comparison with Guidelines. The accident doses and toxicological exposures without and with controls are compared with the offsite and onsite risk guidelines in Tables 3.4.2.16-1 and 3.4.2.16-2. The accident radiological doses without controls are above both the offsite and onsite evaluation guidelines. Both offsite and onsite doses from the spray leak assuming controls are shown to be well below the risk guidelines.

The toxicological sum-of-fractions is well over one for the accident without controls at the onsite receptor location. The toxicological consequences therefore exceed the onsite risk guidelines. The offsite toxicological consequences for the accident without controls are below risk evaluation guidelines. The toxicological sum-of-fractions for the accident with controls is well below one, hence well below the risk guidelines, for both the onsite and offsite receptors.

3.4.2.16.5 Summary of Safety Structures, Systems, and Components and Technical Safety Requirement Controls. No changes in Safety structures, systems, and components and no new TSR controls are required for this accident (Tables 3.4.2.16-3 through 3.4.2.16-5).

Safety Structures, Systems, and Components. Table 3.4.2.16-3 summarizes the safety structures, systems, and components selected to prevent or mitigate the spray leak from a structure. These include the transfer system covers, backflow preventers, the pipe-in-pipe encasements, and the stack CAM and interlock.

Technical Safety Requirement Controls. The TSRs selected to prevent or mitigate the spray leak from a structure include the transfer system cover controls; the ventilation stack CAM interlock system on 241-A-702, 241-AZ-702, 296-P-16, and 296-C-006 Ventilation Systems; transfer controls; the encasement seal loop controls; the transfer pump administrative lock controls; and the transfer system cover removal controls.

Defense-in-Depth. The Defense-in-Depth controls to prevent or mitigate the spray leak from a structure encompass service testing of repositioned jumpers, process pit and vault pit leak detectors, material balance, encasement leak detectors, isolation valves, seismic shutdown switches, and backflow preventers.

Table 3.4.2.16-1. Summary of Consequences and Frequencies Without Controls.

Accident	Consequences								Frequency
	Radiological, Sv (rem)				Toxicological				
	Onsite		Offsite		Onsite		Offsite		
	Calculated dose	Risk guideline	Calculated dose	Risk guideline	Calculated SOF	Risk guideline	Calculated SOF	Risk guideline	
Spray leak from flush connection	1.5 E+02 (1.5 E+04)	5.0 E-03 (5.0 E-01)	2.1 E-01 (2.1 E+01)	1.0 E-03 (1.0 E-01)	620	1	0.87	1	Anticipated

SOF = sum-of-fractions.

Table 3.4.2.16-2. Summary of Consequences and Frequencies With Controls.

Accident	Consequences								Frequency
	Radiological, Sv (rem)				Toxicological				
	Onsite		Offsite		Onsite		Offsite		
	Calculated dose	Risk guideline	Calculated dose	Risk guideline	Calculated SOF	Risk guideline	Calculated SOF	Risk guideline	
Spray leak from waste transfer system	1.8 E-03 (1.8 E-01)	5.0 E-03 (5.0 E-01)	1.6 E-06 (1.6 E-04)	1.0 E-03 (1.0 E-01)	0.052	1	1.1 E-04	1	Anticipated

SOF = sum-of-fractions.

Table 3.4.2.16-3. Safety Structures, Systems, and Components for Spray Leaks.

Control	Safety classification		Safety function	Comments
	SC	SS		
Transfer system covers	X	--	Knockdown spray, limit release of aerosols to the atmosphere	Waste transfer-associated structure covers are also a mitigative feature for other accidents and provide radiation protection (i.e., shielding) for facility workers
Backflow preventers in service water system connections to the waste transfer system	--	X	Prevent contamination of the service water system, e.g., the tanker truck, via backflow of waste into service water line, e.g., the hose	The hazardous condition of concern is a spray leak, a rupture of the tanker truck, or simply exposure of the workers
Transfer line pipe-in-pipe encasement	X	--	Confine leak from the primary piping and ensure that a leak is directed to the encasement leak detection system	The pipe-in-pipe encasement shall be designed to withstand the design basis earthquake and high wind
Stack CAM and interlock to exhaust fan (241-A-702, 241-AZ-702, 296-P-16, and 296-C-006 Ventilation Systems)	X	--	Ensure exhaust fan is shut down should exhaust HEPA filters break through (Prevent unfiltered release from occurring for more than 10 minutes)	Aerosol-laden air could eventually saturate the HEPA filters, resulting in their failure

CAM = continuous air monitor.
HEPA = high-efficiency particulate air (filter).

Table 3.4.2.16-4. Technical Safety Requirement Controls for Spray Leaks.

Control	Safety function	Comments
Transfer system covers	Operable covers mitigate spray leak by knocking down/confining the spray. This control ensures covers are operable when the waste transfer-associated structure is physically connected to the waste transfer piping during waste transfer	An exception is allowed if the waste transfer-associated structure is separated by two locked valves and continuous monitoring for spray leaks is provided
Ventilation stack CAM interlock system	Ensures interlock is operable during transfers out of the facility and during tank farm transfers through routes physically connected to the unloading facility	--
Transfer Controls with the following key elements: - Configuration management shall be applied to waste transfer routes - The waste transfer route configuration shall be independently verified prior to transfers - Use of vehicle restrictions around transfer lines	 Configuration management and independent verification of waste transfer routes serves to prevent mistransfers Ensure that the transfer line is protected from vehicle collisions that could result in a loss of integrity of the primary and encasement pipes	--
Encasement Seal Loop Controls with the following key element: - Encasement valve on encasement drain line will not be closed	Ensure that if the primary pipe leaks during waste transfer, the encasement will drain to the waste transfer-associated structure	Control prevents pressurizing encasement risers which could result in abovegrade spray release
Transfer Pump Administrative Lock Controls	Eliminate motive force for unplanned transfers	To address spray leaks that may occur during inadvertent waste transfer pump starts, either the waste transfer-associated covers will be operable or the waste transfer pump(s) physically connected to waste transfer-associated structures will be locked out
Transfer System Cover Removal Controls	Provide compensatory measures for cover removal during transfers	--

Table 3.4.2.16-5. Defense-in-Depth Controls for Transfer System Spray Leaks.*

Control	Safety function	Comments
Repositioned jumpers are in service tested during initial sluicing. Cameras lowered through penetrations in the cover block are used to verify initial jumper integrity during the leak test	Reduce the likelihood of a spray leak from a failed or misaligned jumper	--
Process pit and vault pit leak detectors	Limit duration of spray release. The liquid fraction of the release will drain past the leak detector	Leaks that produce low flow rates of liquid may not be detected
Material balance after each sluicing batch of 12 hours maximum duration during transfer operations, including total material transferred and solids loading calculation	Limit duration of spray release	Material balances are typically performed by comparing level changes in the source and receipt tanks and adjusting for line holdup. The material balances will eventually discover the discrepancy caused by the spray leak
Encasement leak detectors	Ensure transfer pump is shutdown upon detection of leak from primary transfer pipe. Prevents pressurization and potential spray leak from test riser	--
Isolation valves; manual valve is closed to isolate the flush system when not in use	Prevent backflow of waste into the raw water supply	Isolation valves are not effective at preventing backflows during flushing operations as the valves will be open
Backflow preventers	Prevent backflow of waste into the raw water supply	--
Seismic shutdown switches	Shut down transfer pumps upon detection of a seismic event	

*Some of the controls in this list may be determined to be Safety-Class or Safety-Significant for other accidents.
CAM = continuous air monitor.

This page intentionally left blank.

3.4.2.17 Spray Leak from an Underground Waste Transfer Line. This analysis addresses the potential of WRSS operations to break an underground transfer line before or during sluicing operations. This accident is different than that analyzed in Section 5.3.2.21 of the main text of the BIO because the pump flow rate of the WRSS pumps is higher than that used in the BIO and the waste composition is different. Although the consequences of an underground transfer line failure are developed in other WRSS accident analyses, unique event sequences are identified in this analysis. The need for controls applicable to these unique event sequences is also identified.

3.4.2.17.1 Scenario Development. The accident scenarios for spray leaks from an underground transfer line are described in the main text of the BIO.

Other event initiators identified in the hazard analysis in Section 3.3 include a seismic event and light aircraft crash. The excavation activity is the dominant initiator because the consequence analyses are already bounding and the likelihood of an excavation error is greater than a seismic event or an aircraft crash.

An impact to a transfer line could result in two basic release scenarios: a spray leak and formation of a surface pool. The formation of a surface pool is addressed in Sections 3.4.2.14 and 3.4.2.15, and spray leaks are addressed in Section 3.4.2.16. The source terms and consequences in those sections are bounding for the possible releases postulated in this event. Comparing the consequences of (and recovery from) a surface pool and a spray leak shows that the spray leak is bounding over the surface pool. Therefore, the consequences in this analysis are taken from the consequences of a spray leak from an aboveground structure. The possible formation of a surface pool is not considered further.

The bounding frequency category assigned to this event is "anticipated." This frequency is assigned in the main text of the BIO to excavation impacts to underground waste transfer lines and applies to the transfer lines associated with Tank 241-C-106 sluicing operations.

3.4.2.17.2 Source Term Analysis. The source term for this event is bounded by the source term calculated in the main text and in Section 3.4.2.16.

3.4.2.17.3 Consequence Analysis. The consequences for this event are bounded by the consequences calculated in the main text and in Section 3.4.2.16. The consequences are mitigated or prevented for the scenario with controls.

3.4.2.17.4 Comparison to Guidelines. The consequences calculated in the main text and in Section 3.4.2.16 for a spray leak without controls exceed the onsite and offsite radiological risk guidelines and the onsite toxicological risk guidelines, and require controls. The consequences are mitigated or prevented for the scenario with controls.

3.4.2.17.5 Summary of Safety-Class Structures, Systems, and Components and Technical Safety Requirements.

Safety Structures, Systems, and Components. No safety structures, systems, and components have been identified for this event.

Technical Safety Requirement Controls. Table 3.4.2.17-1 lists the controls relied on to prevent impacts to the underground transfer lines. In addition to the preventive controls, a mitigative control is listed as a key element in Table 3.4.2.17-1. The TSRs selected are excavation controls to prevent damaging the transfer line and transfer controls to protect the transfer line integrity.

Defense-in-Depth. The Defense-in-Depth controls for this event are listed in Table 3.4.2.17-2. The Defense-in-Depth controls are barriers to restrict access to the transfer line, seismic shutdown switches, and transfer controls.

Table 3.4.2.17-1. Technical Safety Requirement Controls for Spray Leak from Underground Waste Transfer Lines.

Control	Safety function	Comments
Excavation Controls with the following key elements: - An excavation permit shall be required when excavating in areas where waste transfer lines exist	Prevents leaks in waste transfer lines caused by excavation activities by ensuring: • Excavation activities are not inadvertently performed near waste transfer lines • Excavation activities are carefully controlled when required near waste transfer lines	--
- Waste transfers are prohibited through lines uncovered by excavation activities unless compensatory controls are established	Prevents transfers through waste transfer lines that are uncovered by excavation activities that could cause worker radiation doses exceeding limits established by the radiation protection program	
- Waste transfers shall not be conducted in transfer lines located within approximately 5 m (15 ft) of ongoing excavation activities	Prevents leaks in waste transfer lines caused by excavation activities by ensuring that excavation activities are not performed near waste transfer lines during waste transfers	
- Prior to initiation of an excavation activity, identify emergency response actions and establish communications between the excavation site and operations personnel to ensure immediate shutdown of waste transfers when leakage is indicated.	Mitigates waste transfer leaks caused by excavation activities by prompt shutdown of the waste transfer pump	
- Encased pipe outside of the tank farm boundaries shall be identified with permanent aboveground labels	Prevents leaks in waste transfer lines caused by excavation activities by ensuring that excavation activities are not inadvertently performed near waste transfer lines outside of tank farms	

Table 3.4.2.17-2. Defense-in-Depth Controls for Spray Leak from Underground Waste Transfer Lines.

Control	Safety function	Comments
T-bars and chains	Restrict access to transfer lines	--
Material balance after each sluicing batch of 12 hours maximum duration during transfer operations, including total material transferred and solids loading calculation	Prevents a leak from a transfer line by monitoring the flow through the lines	A small leak, such as a spray leak, is difficult to detect by the material balance equipment
Seismic shutdown switches	Shut down transfer pumps upon detection of a seismic event	

3.4.2.18 Natural Phenomena. The following natural phenomena events were identified in the hazard analysis: seismic events, ice storms, rainfall, local flooding, volcanic activity, and high winds/dust devils. These phenomena are initiators for several of the accidents analyzed in detail in Section 3.4.2. They do not pose any unique accident scenarios different from those in Section 3.4.2 or the main text of the BIO.

This page intentionally left blank.

3.4.3 Beyond Evaluation Basis Accidents

The results of an assessment of beyond evaluation basis accidents analyzed to provide a perspective of the residual risk associated with tank farm operations (including WRSS) is provided in the main text of the BIO. Beyond valuation basis accidents are not analyzed specific to WRSS.

This page intentionally left blank.

3.5 REFERENCES

This section contains the references for all of Chapter 3.0.

98-TWR-025, *Contract No. DE-AC06-96RL13200 - Addendum To Safety Evaluation Report (SER) For Project W-320, Tank 241-C-106 Sluicing* (Letter from J. D. Wagoner, RL, to R. D. Hanson, FDH), dated September 25, 1998.

ANSI N46.1, 1980, *American National Standard - Guidance for Defining Safety-Related Features of Nuclear Fuel Cycle Facilities*, American Nuclear Society, La Grange Park, Illinois.

Bander, T. J., Crea, B. A., and R. S. Marlow, 1994, *Assessment of Possibility of Deformation of the Bottom Steel Liner of Tank 241-C-106*, Internal Memo, Westinghouse Hanford Company, Richland, Washington.

DOE 5480.22, 1996, *Technical Safety Requirements*, Change 2, U.S. Department of Energy, Washington, D.C.

DOE 5480.23, 1994, *Nuclear Safety Analysis Reports*, Change 1, U.S. Department of Energy, Washington, D.C.

DOE/EIS-0189, 1996, *Final Environmental Impact Statement for the Tank Waste Remediation System*, U.S. Department of Energy, Washington, D.C., and Washington State Department of Ecology, Olympia, Washington.

DOE/RL-92-36, 1993, *Hanford Site Hoisting and Rigging Manual*, U.S. Department of Energy, Richland Operations Office, Richland, Washington.

DOE-HDBK-3010-94, 1994, *Airborne Release Fractions/Rates and Respirable Fractions for Nonreactor Nuclear Facilities*, U.S. Department of Energy, Washington, D.C.

DOE-STD-1027-92, 1992, *Hazard Categorization and Accident Analysis Techniques for Compliance with DOE Order 5480.23, Nuclear Safety Analysis Reports*, U.S. Department of Energy, Washington, D.C.

DOE-STD-3009-94, 1994, *Preparation Guide for U.S. Department of Energy Nonreactor Nuclear Facility Safety Analysis Reports*, U.S. Department of Energy, Washington, D.C.

Grove, 1987, *MICROSKYSHINE*, Grove Engineering, Inc., Rockville, Maryland.

HNF-SD-W151-CSA-001, 1997, *CSER 96-014: Criticality Safety of Project W-151, 241-AZ-101 Retrieval System Process Test*, Rev. 1, Duke Engineering and Services Hanford, Richland, Washington.

HNF-SD-W320-CN-004, 1997, *Consequence Analysis of a Liner Breach due to Steam Under the Liner*, Rev. 0, Duke Engineering and Services Hanford, Richland, Washington.

HNF-SD-W320-ER-004, 1998, *Project W-320 SAR and Process Control Thermal Analysis*, Rev. 1, Numatec Hanford Corporation, Richland, Washington.

HNF-SD-WM-CN-065, 1997, *Consequence Analysis of NaOH Solution Spray Release During Addition to Waste Tank*, Rev. 2, Fluor Daniel Northwest, Inc., Richland, Washington.

HNF-SD-WM-CN-098, 1997, *Consequences of a Postulated Tank Bump Related to Project W-320*, Rev. 0, Fluor Daniel Northwest, Inc., Richland, Washington.

HNF-SD-WM-CN-099, 1998, *Radiological and Toxicological Analyses of Tank 241-AY-102 and Tank 241-C-106 Ventilation Systems*, Rev. 1A, Fluor Daniel Northwest, Inc., Richland, Washington.

HNF-SD-WM-CN-102, 1997, *Radiological and Toxicological Consequences of a Worst-Case Spray Leak Related To Project W-320*, Rev. 0, Fluor Daniel Northwest, Inc., Richland, Washington.

HNF-SD-WM-CN-104, 1998, *Calculation Notes for an Underground Leak which Remains Underground*, Rev. 0, Fluor Daniel Northwest, Inc., Richland, Washington.

HNF-SD-WM-CN-110, 1997, *Consequences of a Radioactive Surface Pool Resulting From Waste Transfer Operations Between Tanks 241-C-106 and 241-AY-102*, Rev. 0, Fluor Daniel Northwest, Inc., Richland, Washington.

HNF-SD-WM-CN-114, 1997, *Project W-320 Primary Ventilation Air Flow Requirements for Mitigation of Steady State Flammable Gas Concentrations in the Headspaces of Tanks 241-C-106 and 241-AY-102*, Rev. 1, Lockheed Martin Hanford Corporation, Richland, Washington.

HNF-SD-WM-HSP-002, 1998, *Tank Farms Health and Safety Plan*, Rev. 3, Lockheed Martin Hanford Corporation, Richland, Washington.

HNF-SD-WM-TI-756, 1997, *Chemical and Chemically Related Issues Associated with Sluicing Tank C-106 Waste to Tank AY-102*, Rev. 2, Fluor Daniel Hanford, Inc., Richland, Washington.

HNF-SD-WM-TSR-006, 1997, *Tank Waste Remediation System Technical Safety Requirements*, Rev. 0, Fluor Daniel Hanford, Inc., Richland, Washington.

LA-UR-94-2657, 1994, *Hanford Defined Wastes: Chemical and Radionuclide Compositions*, Los Alamos National Laboratory, Los Alamos, New Mexico.

LA-UR-96-3860, 1997, *Hanford Tank Chemical and Radionuclide Inventories of HDW Model Rev. 4*, Los Alamos National Laboratory, Los Alamos, New Mexico.

LA-UR-97-1330, 1997, *Discussion of Flammable Gas Issues for Project W-320*, Rev. 0, Los Alamos National Laboratory, Los Alamos, New Mexico.

LA-UR-97-1581, 1997, *Preliminary Hazard Analysis for Project W-320*, Los Alamos National Laboratory, Los Alamos, New Mexico.

RHO-RE-SA-216, *Characterization of Airborne Radionuclide Particulates in Ventilated Liquid Waste Tanks*, Rockwell Hanford Operations, Richland, Washington.

TF-96-0433 (USQ Tracking No.), 1996, *Consolidation of Flammable Gas/Slurry Growth Unreviewed Safety Question Issues*, Westinghouse Hanford Company, Richland, Washington.

WHC-CM-4-46, 1996, *Safety Analysis Manual*, Westinghouse Hanford Company, Richland, Washington.

WHC-EP-0793, 1994, *Estimation of Plutonium in Hanford Site Waste Tanks Based on Historical Records*, Rev.0, Westinghouse Hanford Company, Richland, Washington.

WHC-IP-0690, 1992, *Safety Analysis and Regulation Manual*, Rev. 2, Westinghouse Hanford Company, Richland, Washington.

WHC-MR-0132, 1990, *A History of the 200 Area Tank Farms*, Westinghouse Hanford Company, Richland, Washington.

WHC-SD-GN-SWD-200007, 1994, *A Model for Predicting Respirable Releases from Pressurized Leaks*, Rev. 0, Westinghouse Hanford Company, Richland, Washington.

WHC-SD-SQA-CSA-20356, 1993, *CSER 92-009: An Analytical Model for Evaluating Subcritical Limits for Waste in Hanford Site Storage Tanks*, Rev. 0, Westinghouse Hanford Company, Richland, Washington.

WHC-SD-TWR-RPT-002, 1996, *Structural Integrity and Potential Failure Modes of the Hanford High-Level Waste Tanks*, Rev. 0, Westinghouse Hanford Company, Richland, Washington.

WHC-SD-W320-CSA-001, 1997, *Criticality Safety Assessment of the Tank 241-C-106 Remediation*, Rev. 1, Westinghouse Hanford Company, Richland, Washington.

WHC-SD-W320-SP-001, 1996, *Project W-320 Position Paper - Criticality Concern*, Rev. 0, Westinghouse Hanford Company, Richland, Washington.

WHC-SD-WM-CN-022, 1996, *Evaluation of Potential Consequences of Steam Bump in High Heat Load Waste Tanks and Assessment and Validation of GOTH Computer Code*, Rev. 0, Westinghouse Hanford Company, Richland, Washington.

WHC-SD-WM-CN-032, 1996, *Analysis of Consequences of Postulated Solvent Fires in Hanford Site Waste Tanks*, Rev. 0-A, Westinghouse Hanford Company, Richland, Washington.

WHC-SD-WM-CN-043, 1996, *Tank Bump Consequence Analysis*, Rev. 2, Westinghouse Hanford Company, Richland, Washington.

WHC-SD-WM-CN-048, 1996, *Calculation Notes in Support of TWRS FSAR Spray Leak Accident Analysis*, Rev. 1, Westinghouse Hanford Company, Richland, Washington.

WHC-SD-WM-CN-049, 1996, *Calculation Notes For Surface Leak Resulting in Pool, TWRS FSAR Accident Analysis*, Rev. 0, Westinghouse Hanford Company, Richland, Washington.

WHC-SD-WM-CN-056, 1996, *Fire in a Contaminated Area*, Rev. 2, Westinghouse Hanford Company, Richland, Washington.

WHC-SD-WM-CN-062, *1996, HEPA Filter Failure by Fire or Heater Overtemperature and Subsequent Unfiltered Release*, Rev. 2, Westinghouse Hanford Company, Richland, Washington.

WHC-SD-WM-CN-063, *1996, Releases From Failed HEPA Filters Due to an Overpressurization*, Rev. 2, Westinghouse Hanford Company, Richland, Washington.

WHC-SD-WM-ER-400, 1995, *Tank Waste Source Term Inventory Validation*, Rev. 0, Westinghouse Hanford Company, Richland, Washington.

WHC-SD-WM-ER-454, 1997, *Tank Characterization Report for Double Shell Tank 241-AY-102*, Rev. 0B, Westinghouse Hanford Company, Richland, Washington.

WHC-SD-WM-ER-526, 1997, *Evaluation of Hanford Tanks for Trapped Gas*, Rev. 1B, Fluor Daniel Hanford, Inc., Richland, Washington.

WHC-SD-WM-ES-218, 1993, *Engineering Study of Tank Leaks Related to Hydraulic Retrieval of Sludge from Tank 241-C-106*, Rev. 1, Westinghouse Hanford Company, Richland, Washington.

WHC-SD-WM-SARR-011, 1996, *Toxic Chemical Considerations for Tank Farm Releases*, Rev. 2, Westinghouse Hanford Company, Richland, Washington.

WHC-SD-WM-SARR-016, 1996, *Tank Waste Composition and Atmospheric Dispersion Coefficients for Use in Safety Analysis Consequence Assessments*, Rev. 2, Westinghouse Hanford Company, Richland, Washington.

WHC-SD-WM-SARR-037, 1996, *Development of Radiological Concentrations and Unit Liter Doses for TWRS FSAR Radiological Consequence Calculations*, Rev. 0, Westinghouse Hanford Company, Richland, Washington.

WHC-SD-WM-TI-757, 1996, *Fluid Dynamic Particulate Segregation, Chemical Process, and Natural Ore Analog Discussions that Relate to the Potential for Criticality in Hanford Tanks*, Rev. 0, Westinghouse Hanford Company, Richland, Washington.

WHC-SD-WM-TI-775, 1996, *Structural Assessment of Accident Loads*, Rev. 0, Westinghouse Hanford Company, Richland, Washington.

WHC-SD-WM-TI-782, 1996, *Load Drop Evaluation*, Rev. 0, Westinghouse Hanford Company, Richland Washington.

WHC-SD-WM-UM-030, 1995, *ISO-PC Version 1.98 - User's Guide*, Rev. 0, Westinghouse Hanford Company, Richland, Washington.

CHAPTER 4.0
SAFETY STRUCTURES, SYSTEMS, AND COMPONENTS

This page intentionally left blank.

CHAPTER 4.0
SAFETY STRUCTURES, SYSTEMS, AND COMPONENTS

CONTENTS

4.0 SAFETY STRUCTURES, SYSTEMS, AND COMPONENTS 4-1
4.1 INTRODUCTION 4-1
4.2 REQUIREMENTS 4-1
4.3 SAFETY-CLASS STRUCTURES, SYSTEMS, AND COMPONENTS 4-2
4.3.1 Annulus Ventilation System (Tank 241-AY-102) 4-2
4.3.2 Primary Tank Ventilation System (241-AY-102 & 241-C-106) 4-3
4.3.3 Primary Tank Leak Detection System (241-AY-102) 4-6
4.3.4 Transfer Line Pipe-in-Pipe Encasement 4-7
4.3.5 Transfer Leak Detection Systems 4-8
4.3.6 Transfer System Covers 4-9
4.3.7 Stack Continuous Air Monitor and Interlock to Exhaust Fan 4-10
4.4 SAFETY-SIGNIFICANT STRUCTURES, SYSTEMS, AND COMPONENTS 4-11
4.4.1 Stack Continuous Air Monitor Interlocks 4-11
4.4.2 Tank Level Detection System 4-12
4.4.3 Backflow Preventers 4-13
4.5 REFERENCES 4-13

LIST OF TABLES

4-1 Safety-Class Structures, Systems, and Components T4-1

4-2 Safety-Significant Structures, Systems, and Components T4-2

This page intentionally left blank.

4.0 SAFETY STRUCTURES, SYSTEMS, AND COMPONENTS

4.1 INTRODUCTION

The purpose of this chapter is to provide details on structures, systems, and components (SSCs) utilized by Project W-320 that are necessary for Waste Retrieval Sluicing System (WRSS) activities to satisfy accident consequence guidelines, provide Defense-in-Depth, and aid in ensuring worker safety. Descriptions of the attributes required (1) to support the safety functions identified in the hazard and accident analyses, and (2) to support subsequent derivation of the Technical Safety Requirements (TSRs), are provided.

4.2 REQUIREMENTS

The following lists the current standards, regulations, and U.S. Department of Energy (DOE) orders that establish the requirements in support of safety analysis and design.

- DOE 5480.28, *Natural Phenomena Hazard Mitigation*[1] (1994)
- DOE 6430.1A, *General Design Criteria*[2] (1989)
- HP-SDC-4.1, *Standard Architectural-Civil Design Criteria*[3] (1988)

The existing WRSS SSCs that are designated as Safety-Class and Safety-Significant in this addendum, were not designed and constructed to meet Safety-Class criteria.

An engineering analysis was performed for each Safety Class and Safety Significant system of the WRSS to ensure that it is able to perform its safety function. The results of this evaluation are provided in HNF-2050, *Project W-320 Safety Class and Safety Significant Equipment Engineering Evaluation.* The engineering analysis defined the project strategy for meeting the system safety functions(s) and evaluated the system compliance with safety design requirements. The evaluation includes failure modes and effects analysis, allowed outage times and operational attributes and critical characteristics. The evaluation discusses the results of the reliability analyses for the Tank 241-AY-102 primary and annulus ventilation systems and Tank 241-C-106

---

[1] DOE 5480.28 was canceled by DOE N 251.4 and DOE O 420.1. As of July 2, 1996, the new orders were not transmitted for compliance; therefore, compliance with DOE 5480.28 is required by clause 1-97(a).

[2] Non safety-related portions of DOE 6430.1A will be phased out/canceled upon meeting the implementation conditions of DOE O 430.1. The portions of DOE 6430.1A related to nuclear safety for nonreactor nuclear facilities are canceled by DOE O 420.1. As of July 2, 1996, the new orders were not transmitted for compliance; therefore, compliance with DOE 6430.1A is required.

[3] Refer to Appendix F, "Site-wide Controlled Manual Cross Reference Table," of the BIO for cross-walk between Site-wide controlled manuals (e.g., WHC-CM-X-XX) superseded by Fluor Daniel Hanford, Inc., FDH Procedures (e.g., HNF-PRO-XXX).

primary ventilation system. The evaluation provides the basis for establishing the spare parts requirements for the Safety Class and Safety Significant systems. Acceptance and operational testing is underway, and will demonstrate, where practical, that safety functions and requirements can be met.

4.3 SAFETY-CLASS STRUCTURES, SYSTEMS, AND COMPONENTS

This section provides information about the Safety-Class SSCs identified in Chapter 3.0 "Hazard Evaluations and Accident Analyses." Table 4-1 provides a summary list of those SSCs. Details of each Safety-Class SSC correlating to the information in Table 4-1 follow.

4.3.1 Annulus Ventilation System (Tank 241-AY-102)

The annulus ventilation system of Tank 241-AY-102 is identified as a Safety-Class SSC for the tank bump (Section 3.4.2.11 "Tank Bump") accident scenario and is credited as Safety Significant for the unfiltered release (Section 3.4.2.3 "Unfiltered Release") accident scenario.

4.3.1.1 Safety Function. The safety function of the Tank 241-AY-102 annulus ventilation system is to provide adequate cooling to prevent the sludge or supernate in the tank from reaching the local saturation temperature in the scenarios of Sections 3.4.2.3 and 3.4.2.11.

4.3.1.2 System Description. The Tank 241-AY-102 annulus ventilation system draws outside air into the tank annulus area, where heat being conducted through the tank inner liner is absorbed, before the air is filtered and exhausted to the environment.

The annulus space in Tank 241-AY-102 is ventilated by a dedicated, independent ventilation system. A portion of the annulus ventilation system has been blocked to increase the under-floor flow rate. If needed, any combination of an increased vacuum exhaust fan, an inlet system blower, and an inlet system chiller may be installed to enhance the cooling capacity of the annulus ventilation system and meet the cooling requirements of the tank. Cooling requirements depend on thermal analysis of the actual transferred waste conditions (i.e., volume, fluffing factor, and tank temperature response). A supporting SSC is the electrical system that supplies power to the ventilation fans.

4.3.1.3 **Functional Requirements.** The annulus ventilation system shall maintain a flow rate to control tank waste temperature within the following limits:

≤195 °F (91 °C), for all waste levels

OR

≤195 °F (91 °C) in the top 4.6 m (15 ft) of the waste

AND

≤215 °F (102 °C) in the waste below 4.6 m (15 ft)

Tank waste temperatures must be controlled below those temperatures that could lead to waste boiling, steam generation, overpressurization conditions, and unfiltered releases.

4.3.1.4 **System Evaluation.**

Performance Criteria: To meet its safety function, the annulus ventilation system must provide the sufficient cooling capacity to maintain waste temperatures below the limits described above. Under analyzed base case conditions, the system will require a flow rate capability of 61 m^3/min (2150 ft^3/min) and provision of 4 °C (40 °F) inlet air (HNF-SD-W320-ER-004, *Project W-320 SAR and Process Control Thermal Analysis*). Final determination will be made based on data from the first sluicing campaign.

Analytical results (HNF-SD-W320-ER-004) for worst-case thermal transients indicate that the maximum allowable outage time of this system is 25 days.

System Evaluation: The Tank 241-AY-102 annulus ventilation system is existing and operational. This system was evaluated, as described in Section 4.2, to determine any needed functional upgrades and/or requirements for spares. The system may be upgraded, as described in Section 4.3.1.2, if required for increased cooling capacity. Designs for new equipment upgrades will be performed to DOE 6430.1A criteria.

During WRSS operations, the operability of the annulus ventilation systems shall be verified at a surveillance frequency of 10 days.

4.3.1.5 **Controls (TSRs).**

The assumption in the analyses presented in Sections 3.4.2.3 and 3.4.2.11 is that the annulus ventilation system provides adequate cooling capacity to ensure that the Tank 241-AY-102 waste saturation temperatures are not exceeded for the potential tank bump and unfiltered release.

4.3.2 **Primary Tank Ventilation System (241-AY-102 & 241-C-106)**

The primary ventilation systems of Tanks 241-AY-102 and 241-C-106 are identified as Safety-Class SSCs for the flammable gas deflagration

(Section 3.4.2.8) accident scenario, and the tank bump (3.4.2.11) accident scenario and are credited as Safety-Significant for the unfiltered release (3.4.2.3) accident scenario.

4.3.2.1 Safety Function. The safety functions of the primary ventilation systems of Tanks 241-AY-102 and 241-C-106 are to (1) dilute gases released from the waste in a chronic (steady state) manner such that flammable gas concentrations in tank dome spaces remain below 25% of the lower flammability limit (LFL) and (2) to help remove heat to maintain the tank waste temperatures below the saturation temperature. Another safety function of the Tank 241-C-106 primary system is to cool the tank and prevent a steam release by eliminating thermal saturation zones.

4.3.2.2 System Description. The primary ventilation systems of Tanks 241-AY-102 and 241-C-106 draw outside air into the tanks, mixing and displacing the flammable gases produced by the waste. The air/gas mixture is then removed from the tanks, filtered to remove radioactive particulates, and exhausted to the environment.

Specifically, the Tank 241-C-106 ventilation system (296-C-006) is a combination recirculation and exhaust system. The ventilation system serves to (1) cool the tank, and (2) dilute flammable gas generated in the sludge, which discharges a thoroughly decontaminated ventilation stream to the atmosphere. The recirculation portion of the system is used to provide the needed cooling. The exhaust portion of the system maintains headspace below flammable conditions.

An older heating, ventilating, and air-conditioning (HVAC) system (296-P-16) also serves Tank 241-C-106. The older system will be maintained in an operational standby status as a backup system for cooling Tank 241-C-106. Its main function, however, will be to subcool Tank 241-C-106 waste before initiation of sluicing to reduce the potential for a steam release event during the retrieval activity and to provide a high flow exhaust system to support Tank 241-C-106 open riser maintenance activities.

The primary ventilation system (241-A-702) of Tank 241-AY-102, serves to (1) cool the tank, (2) maintain the tank at a negative pressure while discharging a decontaminated ventilation stream to the atmosphere, and (3) dilute flammable gas generated in the sludge. A backup ventilation system is also available for the 241-A-702 ventilation system. The supporting SSC is the electrical system that provides power to the ventilation fans.

The 241-AZ-702 ventilation system, which will replace the 241-A-702 system, uses separate systems for cooling and/or confinement and for exhausting (Figure 2-9). However, 241-AZ-702 and the existing ventilation system (241-A-702) both rely on evaporative cooling to maintain waste temperatures. The exhaust system contains HEPA filtration and stacks similar to the existing design. A separate recirculating system is added for cooling and confinement. This additional system greatly reduces the amount of air vented out the stack. The 241-AZ-702 system will have three operating modes available: recirculation, high heat, and by-pass.

4.3.2.3 Functional Requirements. The active primary ventilation systems of Tanks 241-AY-102 and 241-C-106 shall prevent the accumulation of flammable gases from steady-state releases by (1) providing a minimum flow rate, and (2) limiting a loss of ventilation upset to a timeframe where gases cannot build to more than the LFL. Definition of 25% LFL is provided in Appendix E, "Flammable Gas/Slurry Growth Unreviewed Safety Question: Justification for Continued Operation for the Tank Farms at the Hanford Site," of the BIO main text.

The primary active ventilation system on Tank-C-106 (296-C-006 or 296-P-16) must also provide sufficient cooling capacity to maintain the waste below 96 °C (205 °F).

4.3.2.4 System Evaluation.

Performance Criteria: To meet its safety function, the primary ventilation system must maintain flammable gas concentrations in tank dome spaces below 25% of the LFL. The minimum flow rate to maintain the headspace below 25% of the LFL has been evaluated in (HNF-SD-WM-CN-114) *Calculation Note: Project W-320 Primary Ventilation Air Flow Requirements for Mitigation of Steady State Flammable Gas Concentrations in the Headspaces of Tanks 241-C-106 and 241-AY-102* for both tanks. For Tank 241-C-106, this flow rate is 2.7E-02 m^3/min (0.74 ft^3/min), using an upper bound hydrogen generation rate of 0.19 m^3/day (6.7 ft^3/day). For Tank 241-AY-102, this flow rate is 8.3E-02 m^3/min (2.95 ft^3/min), using an upper bound hydrogen generation rate of 0.75 m^3/day (26.9 ft^3/day).

The 296-P-16 system must provide 4 °C (40 °F) inlet air through the air inlet station to pre-cool the waste below saturation temperatures (HNF-SD-W320-ER-004).

The Tank 241-AY-102 system must provide 14.2 m^3/min (500 ft^3/min) at 24 °C (76 °F), as noted in HNF-SD-W320-ER-004.

Following sluicing, the 296-P-16 system must maintain any remaining waste in Tank 241-C-106 below saturation temperature (Section 3.4.2.12, "Liner Breach Due to Steam Between the Steel Liner and Concrete Shell in Tank 241-C-106"). This function may not be required if enough waste material is removed from the tank.

System Evaluation: The Tank 241-AY-102 primary ventilation system is existing and operational. This system will be evaluated, as described in Section 4.2 above, to determine any needed functional upgrades and/or requirements for spares. The nominal flow rate of the 241-A-702 system, 17 m^3/min (600 ft^3/min), is more than adequate to maintain the headspace below 25% of the LFL. There is an existing backup ventilation system available for use in the event of a ventilation outage.

The 241-AZ-702 system has been constructed, but not yet operational. This system will also be evaluated, as described in Section 4.2. The nominal flow rate of the 241-AZ-702 system, 2.8 m^3/min (100 ft^3/min), is also more than adequate to maintain the headspace of Tank 241-AY-102 below 25% of the LFL.

The existing Tank 241-C-106 primary ventilation system (296-P-16) is operational. This system has been upgraded to meet flammable gas ignition control requirements (BIO Appendix E). This system will be evaluated as described in Section 4.2. The nominal flow rate of the 296-P-16 system, 68 m^3/min (2400 ft^3/min), is more than adequate to maintain the headspace of Tank 241-C-106 below 25% of the LFL.

The new Tank 241-C-106 primary ventilation system (296-C-006) has been designed, constructed, and installed, but is not yet operational. This system was evaluated as described in Section 4.2. The nominal flow rate of the 296-C-006 system, 5.7 m^3/min (200 ft^3/min), is also more than adequate to maintain the headspace of Tank 241-C-106 below 25% of the LFL. When this system is operational, the 296-P-16 system will serve as a back-up system for both cooling and flammable gas dilution functions.

4.3.2.5 Controls (TSR). The assumption in the Sections 3.4.2.3, 3.4.2.8, and 3.4.2.11 accident analyses is that the ventilation systems are operable and operating during WRSS operations. The operability assumption includes (1) monitoring of the differential pressure across the ventilation system's HEPA filters, or (2) monitoring of the tank pressures, or (3) verification of the flow.

4.3.3 Primary Tank Leak Detection System (241-AY-102)

The primary tank leak detection system for Tank 241-AY-102 is identified as a Safety-Class SSC for the flammable gas deflagration accident (Section 3.4.2.8) and the surface leak resulting in pool accident (Section 3.4.2.15).

4.3.3.1 Safety Function. The safety function of the primary tank leak detection system is to provide an indication of leakage of waste to the annulus space of Tank 241-AY-102.

4.3.3.2 System Description. The primary tank leak detection system includes (1) conductivity probes that detect the presence of liquid in the tank annulus, and (2) a CAM that detects the presence of airborne radionuclides in the annulus ventilation exhaust stream.

4.3.3.3 Functional Requirements. The annulus conductivity probes must be able to detect a specified depth of waste in the bottom of the annulus, and must provide an audible alarm signal and an annunciator panel light upon the detection of waste.

If the conductivity probe is not in service, the annulus ventilation system's CAMs must operate continuously while the annulus ventilation system is operating, and must alarm when radiation levels exceeding a preset level are detected.

4.3.3.4 System Evaluation.

Performance Criteria: To meet their safety function, the primary tank leak detectors must be continuously operational or fail in a fail-safe mode (alarming). Liquid waste contact with the annulus leak detector will activate alarms and annunciator panel lights. The CAM will alarm if the radiation level exceeds a preset level. Failure of the CAMs will activate audible and visible alarms.

System Evaluation: The primary leak detectors on Tank 241-AY-102 are in place, and are operational, and were evaluated as described in Section 4.2. The operability of the liquid waste detectors must be verified by a system functional test prior to WRSS operations.

4.3.3.5 Controls (TSRs). The assumption in the Sections 3.4.2.8, "Flammable Gas Deflagration," and 3.4.2.15, "Surface Leak Resulting in a Pool," analyses is that the annulus liquid waste detectors are operable.

4.3.4 Transfer Line Pipe-in-Pipe Encasement

The transfer line pipe-in-pipe system, and specifically the encasement, has been designated as Safety-Class SSC for the subsurface leak resulting in a pool (Section 3.4.2.14), surface leak resulting in a pool (Section 3.4.2.15), and spray leak from structure (Section 3.4.2.16) scenarios, and is credited as Safety-Significant for the subsurface leak remaining subsurface (Section 3.4.2.13)scenario.

4.3.4.1 Safety Function. The safety function of the transfer line pipe-in-pipe system is to ensure that a leak in the primary waste transfer system piping will be contained and directed to a waste transfer-associated structure, where the leak will be detected, subsequently resulting in operator shutdown of the transfer operation.

4.3.4.2 System Description. The transfer line pipe is fabricated as a pipe within a pipe, with an inner or primary pipe that is surrounded by an encasement or secondary pipe. The encasement pipe forms a sloped annular drain channel, and any leaked waste from a primary pipe will flow by gravity from the leak site along this annular channel to a detector.

4.3.4.3 Functional Requirements. The transfer line pipe-in-pipe system shall contain and route the waste leaked from the primary pipe to a structure at which the leak can be detected. The encasement shall provide an unobstructed flow path to the structure.

4.3.4.4 System Evaluation.

Performance Criteria: To meet its safety function, the transfer lines must be capable of withstanding maximum system pressures, temperatures, and transients. It must withstand credible natural phenomena (i.e., high winds, earthquakes) and must not fail by corrosion for the life of the project.

System Evaluation: The WRSS transfer lines have been constructed and are ready for operation. The transfer lines are designed to Safety-Significant requirements per the U.S. Department of Energy, Richland Operations Office (RL), approved (HNF-SD-W320-FDC-001, *Functional Design Criteria for Tank 241-C-106 Waste Retrieval, Project W-320*). The encased lines are provided with cathodic protection to reduce the possibility of corrosion failure, as well as seismic switches to trip the pumping systems in the event of a significant earthquake (0.1 g). The lines will only be used a total of 10-20 days over a 1-year period.

The transfer line leak accidents analyzed in Section 3.4.2 rely primarily on leak detection and operator shutdown of the transfer pumps to mitigate potential accident consequences. The transfer lines are assumed to fail in both the unmitigated and mitigated accident scenarios. An additional margin of safety is provided by the seismic shutdown switches which are credited as Defense-in-Depth. The seismic trip system will have setpoints that shut down the slurry pump, sluice pump, and booster pumps at ground accelerations less than the current Safety-Significant design seismic loads for the pipe-in-pipe system. If such an event were to occur, the pipe-in-pipe system would require engineering inspection and structural reanalysis prior to further use.

Considering the design of the system and its limited use, it is judged to meet its safety function. The drain path into the pit(s) from the annulus of the encased piping system shall be verified to be free of obstructions prior to the start of a waste transfer.

4.3.4.5 Controls (TSRs). The accident analyses presented in Sections 3.4.2.13, "Subsurface Leak Remaining Subsurface," through 3.4.2.16, "Spray Leak from Structure," assume that the encasement is unobstructed and operable before a waste transfer and remains operable throughout the WRSS operation. The operability assumption includes that the encasement seal loop valves are in their operating position.

4.3.5 Transfer Leak Detection Systems

The transfer leak detection systems, including leak detectors in interfacing pits and their alarms are identified as Safety-Class SSCs for the Subsurface Leak Resulting in a Pool (Section 3.4.2.14) and "Surface Leak Resulting in a Pool," Section 3.4.2.15 accident scenarios, and are credited as Safety-Significant for the "Subsurface Leak Remaining Subsurface" (Section 3.4.2.13) scenario.

4.3.5.1 Safety Function. The safety function of the transfer line leak detection system, and specifically the leak detectors in the pits, is to provide warning of liquid within the transfer line encasement, and routine waste accumulation to prevent transfer pits from overflowing as the result of equipment leaks.

4.3.5.2 System Description. The pits and transfer line encasements are provided with leak detectors located in the lowest part of the structures. The leak detectors have electrodes, at different electrical potentials, which are short-circuited by a conductive medium (i.e., liquid waste) and cause a

change in state of the monitoring circuitry. When liquid waste short-circuits the leak detector electrodes, an alarm is generated.

4.3.5.3 Functional Requirements. A leak detector must be capable of detecting a predetermined depth of liquid accumulation. The leak detection system is required to activate an alarm when a leak is detected.

4.3.5.4 System Evaluation.

Performance Criteria: To meet their safety function, leak detectors must be continuously operational or fail in a fail-safe mode (alarming). When the detectors are contacted by liquid waste, an alarm will activate, leading to operator shutdown of the transfer system.

System Evaluation: The leak detectors associated with the WRSS are installed and operational. These leak detectors have been modified to meet flammable gas ignition control requirements (BIO Appendix E) and provide fail-safe alarm capability. The leak detectors were evaluated as described in Section 4.2. The operation of the leak detector and the associated alarm shall be verified prior to WRSS operations.

4.3.5.5 Controls (TSRs). The assumption in Sections 3.4.2.13, 3.4.2.14, and 3.4.2.15 is that the leak detector systems will be operable and operating during WRSS operations. The operability assumptions include ensuring (1) that the leak detection system is operational, and (2) that the alarm and control functions activated by the leak detector are routinely verified. The specific bases and controls protecting the operability assumptions are developed in Chapter 5.0.

4.3.6 Transfer System Covers

The transfer system covers are identified as Safety-Class SSCs for the spray leak from structure (Section 3.4.2.16) accident scenario, and are credited as Safety-Significant for the surface leak resulting in a pool (Section 3.4.2.15) scenario.

4.3.6.1 Safety Function. The safety function of the transfer system covers is to mitigate the effects of a spray release (i.e., knock down the spray) from the pressurized transfer line and limit the release of aerosols to the atmosphere. Transfer system covers also limit shine and skyshine dose to the onsite receptor.

4.3.6.2 System Description. The transfer system covers are concrete and have been positioned over the pits to form a barrier.

4.3.6.3 Functional Requirements. The transfer system covers must be capable of limiting the splatter of a spray release and mitigating the release of aerosols, as well as limiting shine and skyshine dose to the onsite receptor.

4.3.6.4 System Evaluation.

Performance Criteria: To meet their safety function, the transfer system covers must be in place, must be structurally sound for their design life, and must cover the pit openings such that an undiverted spray to the atmosphere is not possible.

System Evaluation: The transfer system covers are all currently installed and were evaluated as described in Section 4.2. The 241-C-06A and 241-C-06C cover blocks were recently upgraded due to structural concerns, and the 241-AY-02A pit cover block was designed to DOE 6430.1A criteria. The covers shall be verified to be in place during transfers.

4.3.6.5 Controls (TSRs). The Sections 3.4.2.15 and 3.4.2.16 accident analyses assume that the covers and cover assemblies will be operable prior to WRSS operations and will remain operable throughout the WRSS operation to provide a tortuous leak path for a spray leak.

Each time a transfer system cover is opened, the pit structure and its covers shall be visually inspected for damage and/or degradation in structural integrity. The exterior of the transfer system covers shall be visually inspected prior to WRSS operation to ensure that (1) covers are installed and operable, and (2) cover plugs are installed and operable.

4.3.7 Stack Continuous Air Monitor and Interlock to Exhaust Fan

The primary exhaust stack CAM, and interlock to the exhaust fan are identified as a Safety-Class SSC for the spray leak from structure (Section 3.4.2.16) accident scenario.

4.3.7.1 Safety Function. The safety function of the stack CAM interlock to the exhaust fan is to ensure that the fan will be shut down in the event of HEPA exhaust filters break through.

4.3.7.2 System Description. If the stack CAMs on the ventilation exhaust stack detect a predetermined radiation level, the interlock signals an alarm and transmits a signal to a relay that interrupts the electrical power to the exhaust fan motor.

Supporting SSCs include the electrical power for the CAM, the interlock, the alarm, any instrument cabinet heaters, and freeze protection for the CAM gas tubing.

4.3.7.3 Functional Requirements. The stack CAM must operate continuously while the exhaust systems are operating and must be capable of alarming and shutting down the exhaust fan when radiation levels above background are detected in the stack.

4.3.7.4 System Evaluation.

Performance Criteria: The stack CAMs shall operate continuously during ventilation system operation and shall actuate the alarm on failure. Interlocks shall be operational at all times the system is functional.

System Evaluation: The stack CAMs and interlocks are existing and operational on the operating exhausters associated with the WRSS. All WRSS-related stack CAMs and interlocks have been upgraded to meet flammable gas ignition control requirements (BIO Appendix E). CAMs and interlocks will be evaluated as described in Section 4.2. The CAMs and interlocks shall be calibrated and verified to be operable prior to waste transfers. The interlocks must be ensured operable during transfers out of the facility and during tank farm transfers through routes physically connected to the unloading facility.

4.3.7.5 Controls (TSRs). The assumptions in the Section 3.4.2.16 accident analysis are that the CAMs with interlocks are provided on all ventilation stacks, and that the CAMs and their associated alarms and interlocks are operable and operating during and following a spray leak from the structure that results in damage to the HEPA filters. The operability function includes (1) the vacuum pump operates as designed, (2) isokinetic sampling conditions are maintained, (3) the CAMs accurately measure radionuclide levels in the sample, (4) the CAMs are properly set to actuate interlocks when high radionuclide levels are detected, (5) the interlocks perform as required, and (6) local and remote alarms, both visual and audible, are actuated by failure of the CAMs.

4.4 SAFETY-SIGNIFICANT STRUCTURES, SYSTEMS, AND COMPONENTS

This section provides information about the Safety-Significant SSCs identified in Chapter 3.0. Refer to Section 4.3 for the description of Safety-Significant SSCs that are also designated as Safety-Class SSCs with a common safety function. Table 4-2 provides a summary list of the Safety-Significant SSCs. Details of each unique Safety-Significant SSC, correlating to the information in Table 4-2, follow.

4.4.1 Stack Continuous Air Monitor Interlocks

The stack CAM interlocks are designated as Safety-Significant for the "HEPA Filter Failure Due to Exposure to High Pressure or High Temperature," Section 3.4.2.2 and "Unfiltered Release" (Section 3.4.2.3) accident scenarios.

4.4.1.1 Safety Function. The safety function of the stack CAM interlock systems for the accident scenarios presented in Sections 3.4.2.2 and 3.4.2.3 is to prevent the unfiltered ventilation system release from occurring for more than 10 minutes for the 241-A-702 (if returned to service), and 241-AZ-702 ventilation systems on Tank 241-AY-102, and for more than 10 minutes for the 296-C-006 and 296-P-16 ventilation systems on Tank 241-C-106.

4.4.1.2 System Description. The stack CAMs continuously monitor the exhaust air while the ventilation systems are in operation. The CAMs measure the radiation level in the exhaust stream and shut down (through an interlock) the appropriate ventilation system when a predetermined level is reached. The CAMs shall also activate an alarm or shut down the exhaust system in the event of CAM failure.

Supporting SSCs include the electrical power for the CAM, the interlock, the alarm, any instrument cabinet heaters, and freeze protection for the CAM gas tubing.

4.4.1.3 Functional Requirements. The stack CAMs must operate continuously while the exhaust systems are operating. The CAM interlocks are located some distance downstream of the filter location and are expected to be unaffected by the initiator of the HEPA filter failure. The ventilation stack CAMs shall be interlocked to the fans to ensure ventilation system shut-off within 10 minutes for the Tank 241-AY-102 and Tank 241-C-106 ventilation systems.

4.4.1.4 System Evaluation. The stack CAMs shall be calibrated prior to WRSS operations and periodically as required.

4.4.1.5 Controls (TSRs). The assumptions in the HEPA filter failure accident described in Section 3.4.2.2 and credited in Section 3.4.2.3 are that the CAMs are provided on all exhaust stacks, and that the CAMs and their associated alarms and interlocks are operable and operating. The operability assumptions include (1) vacuum pumps operate as designed, (2) isokinetic sampling conditions are maintained, (3) CAMs accurately measure radionuclides in the sample, (4) CAMs are properly set to actuate interlocks when high radionuclide levels are detected, (5) interlocks perform as required, and (6) local and remote alarms, both visual and audible, are actuated by failure of the CAMs.

4.4.2 Tank Level Detection System

The primary tank level detection systems are designated as Safety-Significant SSCs for the subsurface leak remaining subsurface (Section 3.4.2.13), subsurface leak resulting in a pool (Section 3.4.2.14), and surface leak resulting in a pool (Section 3.4.2.15) accident scenarios.

4.4.2.1 Safety Function. The safety function of the tank (primary) level measurement system is to provide measurements used in the performance of material balance calculations between transfer batches. The calculations are used to detect discrepancies during transfers to detect leaks or misroutes.

4.4.2.2 System Description. Each system includes at least one level detector, which may be a manual tape, an FIC gauge, an ENRAF gauge, or a set of dip tubes.

4.4.2.3 Functional Requirements. The level detection systems are required to measure tank waste levels and to transmit the data to local and/or remote level indicators.

4.4.2.4 System Evaluation. Tank level detection systems shall measure waste levels with an accuracy of ±1.3 cm (±0.5 in.) and will be verified operable prior to WRSS operations.

4.4.2.5 Controls (TSRs). The assumption in the Chapter 3.0 accident analyses is that the level monitoring systems will be operable and operating when they are needed to perform their safety function. The operability assumption includes (1) calibration of level detection instruments and indicators is properly performed and is kept current, and (2) level readings are taken and/or recorded at intervals that will allow early detection of leaks or misroutes into Tanks 241-C-106 and 241-AY-102. NOTE: The level detection system for Tank 241-C-106 will be raised during this operation.

4.4.3 Backflow Preventers

The backflow preventers for the slurry from Tank 241-AY-102 are identified as Safety-Significant SSCs for the surface leak resulting in a pool (Section 3.4.2.15) and spray leak from structure (Section 3.4.2.16) accident scenarios.

4.4.3.1 Safety Function. The safety function of the backflow prevention devices is to prevent back flow of waste into the service water system (e.g., tankers, trucks).

4.4.3.2 System Description. The backflow preventer consists of two valves that prevent backflow into the service water system. At the AY Farm, a temporary manual valve and check valve are added to the connection.

4.4.3.3 Functional Requirements. Backflow prevention devices shall be installed in accordance with the manufacturer's instructions. The rated pressure of the backflow preventer shall exceed the maximum pressure of the system in which it is installed.

4.4.3.4 System Evaluation. They shall be operated within their design limits (e.g., maximum operating pressure) as certified by the manufacturer.

4.4.3.5 Controls (TSRs). TSR controls are not required to ensure the functionality of backflow preventers (Section 5.3.3.3).

4.5 REFERENCES

DOE 5480.28, 1994, *Natural Phenomena Hazard Mitigation*, U.S. Department of Energy, Washington, D.C.

DOE 6430.1A, 1989, *General Design Criteria*, U.S. Department of Energy, Washington, D.C.

HNF-2050, 1998, *Project W-320 Safety Class and Safety Significant Equipment Engineering Evaluation*, Rev. 0, Numatec Hanford Company, Richland, Washington.

HNF-SD-WM-CN-114, 1997, *Calculation Note: Project W-320 Primary Ventilation Air Flow Requirements for Mitigation of Steady State Flammable Gas Concentrations in the Headspaces of Tanks 241-C-106 and 241-AY-102*, Rev. 1, Lockheed Martin Hanford Corporation, Richland, Washington.

HNF-SD-W320-ER-004, 1998, *Project W-320 SAR and Process Control Thermal Analysis*, Rev. 1, Numatec Hanford Company, Richland, Washington.

HNF-SD-W320-FDC-001, 1998, *Functional Design Criteria for Tank 241-C-106 Waste Retrieval, Project W-320*, Rev. 5, Fluor Daniel Hanford, Inc., Richland, Washington.

HPS-SDC-4.1, 1988, *Standard Architectural-Civil Design Criteria*, Westinghouse Hanford Company, Richland, Washington.

Table 4-1. Safety-Class Structures, Systems, and Components.

SSC	Accident(s)	Safety Functions	Functional Requirements	Operability criteria for TSRs
Annulus ventilation system (Tank 241-AY-102)	Tank Bump, Section 3.4.2.11.	Provides waste temperature cooling ability to maintain tank waste temperatures below local saturation temperature.	Provide annulus space ventilation flow for cooling of the waste in Tank 241-AY-102.	The operability of the annulus ventilation system shall be verified prior to sluicing and periodically thereafter.
Primary tank ventilation systems (Tank 241-C-106/ 241-AY-102)	Flammable Gas Deflagration, Section 3.4.2.8; Tank Bump, Section 3.4.2.11.	Maintain flammable gas concentrations below 25% of the LFL. Provides waste temperature cooling ability to maintain tank waste temperatures below local saturation temperature.	Maintain the ventilation flow rates as required by operational procedures. Provide ventilation flow for cooling.	Operability must be verified prior to WRSS operations.
Primary tank leak detection system	Flammable Gas Deflagration, Section 3.4.2.8; Surface Leak Resulting in a Pool, Section 3.4.2.15.	Provides indication that waste has leaked into the annulus space.	Detect a specified depth of waste in the annulus area and provide an audible alarm signal and annunciator panel light.	Operability must be verified prior to WRSS operations.
Transfer line pipe-in-pipe encasement	Subsurface Leak Resulting in a Pool, Section 3.4.2.14; Surface Leak Resulting in a Pool, Section 3.4.2.15; Spray Leak from Structure, Section 3.4.2.16.	Ensures that a leak in the primary waste transfer system piping is contained and directed to a waste transfer-associated structure.	Route the waste from the leaking primary pipe to the pit.	Shall be verified operable prior to WRSS operations.
Transfer leak detection system	Subsurface Leak Resulting in a Pool, Section 3.4.2.14;Surface Leak Resulting in a Pool, Section 3.4.2.15.	Detect leaks in transfer associated structures (pits).	Shall be capable of detecting leak and activating an alarm leading to operator shutdown of the transfer	Shall be verified operable prior to WRSS operations.
Transfer system covers	Spray Release from Structure, Section 3.4.2.16.	Mitigate the effect of a spray leak within the transfer pits. Limit release of aerosols generated by splatter inside the pit; limit shine and skyshine dose to onsite receptor.	The covers must be capable of limiting the splatter of a spray release and mitigating the release of aerosols.	Transfer system covers must be installed during waste transfers.
Stack CAM and interlock to exhaust fan 241-A-702/ 241-AZ-702 296-P-16/296-C-006)	Spray Leak From Structure, Section 3.4.2.16.	Shut down exhaust fan should exhaust HEPA filters break through.	Shall be capable of detecting a predetermined level of radiation in the exhaust stream and shut down the ventilation system.	Shall be calibrated and verified operable prior to WRSS operations.

CAM = continuous air monitor. HEPA = high-efficiency particulate air (filter). TSR = Technical Safety Requirement. WRSS = Waste Retrieval Sluicing System.

Table 4-2. Safety-Significant Structures, Systems, and Components. (2 sheets)

SSC	Accident(s)	Safety Functions	Functional Requirements	Operability Criteria for TSRs
Annulus ventilation system (Tank 241-AY-102)	Unfiltered release 3.4.2.3	Provides waste temperature cooling ability to maintain tank waste temperatures below local saturation temperature.	Provide annulus space ventilation flow for cooling of the waste in Tank 241-AY-102.	The operability of the annulus ventilation system shall be verified prior to sluicing and periodically thereafter.
Primary tank ventilation systems (Tank 241-C-106/ 241-AY-102)	Unfiltered Release 3.4.2.3	Provides waste temperature cooling ability to maintain tank waste temperatures below local saturation temperature.	Maintain the ventilation flow rates as required by operational procedures Provide ventilation flow for cooling	Operability must be verified prior to WRSS operations
CAM interlocks on ventilation systems (241-A-702/ 241-AZ-702/ 296-P-16/ 296-C-006)	HEPA Filter Failure, Section 3.4.2.2; Unfiltered Release, Section 3.4.2.3.	Shut down the ventilation system in the event that a HEPA filter fails, and prevent an unfiltered release to the atmosphere for more than a specified time.	Continuously monitor exhaust air while the ventilation system is in operation. Measure the radiation level in the exhaust stream and shut down the ventilation system when a predetermined level is reached. The CAMs shall also activate an alarm or shut down the exhaust system in the event of CAM failure.	CAMs shall be inspected and tested in accordance with existing Hanford Site procedures.
Tank level detection systems	Subsurface Leak Remaining Subsurface, Section 3.4.2.13; Subsurface Leak Resulting in a Pool, Section 3.4.2.14; Surface Leak Resulting in a Pool, Section 3.4.2.15.	Provide tank level indication to support material balance calculations between transfer batches.	Provide level readouts within a specified tolerance.	Shall be verified operable prior to WRSS operations.
Transfer leak detection systems	Subsurface Leak Remaining Subsurface, Section 3.4.2.13	Detect leaks in transfer associated structures (pits).	Shall be capable of detecting leak, and activating an alarm, leading to operator shutdown of the transfer.	Shall be verified operable prior to WRSS operations.
Transfer line pipe-in-pipe encasement	Subsurface Leak Remaining Subsurface, Section 3.4.2.13	Ensures that a leak in the primary waste transfer system piping is contained and directed to a waste transfer-associated structure.	Route the waste from the leaking primary pipe to the pit.	Shall be verified operable prior to WRSS operations.
Transfer system covers	Surface Leak Resulting in a Pool, Section 3.4.2.15	Limit release of aerosols generated by splatter inside the pit; limit shine and skyshine dose to onsite receptor	Pit structures and covers provide a mitigative safety function to limit releases.	Shall be in place during WRSS operations.

Table 4-2. Safety-Significant Structures, Systems, and Components. (2 sheets)

SSC	Accident(s)	Safety Functions	Functional Requirements	Operability Criteria for TSRs
Backflow preventers	Surface Leak Resulting in a Pool, Section 3.4.2.15; Spray Leak from Structure Section 3.4.2.16.	Safety-Significant to prevent general contamination of service water supply systems.	Backflow prevention devices shall be installed in accordance with the manufacturer's instructions. The rated pressure of the backflow preventer shall exceed the maximum pressure of the system in which it is installed.	Backflow prevention devices shall be functionally tested and shall be verified to be operating correctly.

CAM = continuous air monitor.
HEPA = high-efficiency particulate air (filter).
SSC = structure, system, and component.
TSR = Technical safety requirement.
WRSS = Waste Retrieval Sluicing System.

This page intentionally left blank.

This document was too large to scan as a single document; therefore, it has been divided into smaller sections.

Section 8 of 10

Document Information			
Document #	SD-WM-BIO-001	Revision	1
Title	TWRS BASIS FOR INTERIM OPERATION		
Date	10/28/1998		
Originator	Y.G. NOORANI	Originator Co.	FDH
Recipient		Recipient Co.	
References	ECN-644566		
Keywords	AUTHORIZATION BASIS		
Projects	BIO,TWRS,TFARM,W-320		
Other Information	THIS SECTION CONTAINS CHAPTER 5 OF VOLUME 4 ADDENDUM 1		

CHAPTER 5.0

DERIVATION OF TECHNICAL SAFETY REQUIREMENTS

This page intentionally left blank.

CHAPTER 5.0
DERIVATION OF TECHNICAL SAFETY REQUIREMENTS

CONTENTS

5.0 DERIVATION OF TECHNICAL SAFETY REQUIREMENTS 5-1
5.1 INTRODUCTION 5-1
5.2 REQUIREMENTS 5-2
5.3 TECHNICAL SAFETY REQUIREMENTS COVERAGE 5-2
5.3.1 Summary 5-2
5.3.2 Criteria 5-2
5.3.3 Safety Structures, Systems, and Components Not Provided With Explicit Technical Safety Requirement Coverage . . 5-4
5.4 DERIVATION OF FACILITY MODES 5-4
5.4.1 Operational Modes 5-4
5.4.2 Minimum Staffing Levels 5-5
5.5 TECHNICAL SAFETY REQUIREMENT DERIVATION 5-5
5.5.1 Level of Control Criteria 5-6
5.5.2 LCO 3.1.1—Transfer System Covers and Entry Doors . . . 5-8
5.5.3 LCO 3.1.3—Transfer Leak Detection Systems 5-8
5.5.4 LCO 3.1.4—Ventilation Stack Continuous Air Monitor Interlock Systems 5-9
5.5.5 LCO 3.2.1—Double-Shell Tank and Aging Waste Facility Tank Ventilation Systems 5-10
5.5.6 LCO 3.2.2—Single-Shell Tank Ventilation Systems-Active 5-11
5.5.7 LCO 3.2.6—Primary Tank Leak Detection Systems 5-11
5.5.8 LCS/LCO 3.3.1—Single-Shell Tank Waste Temperature Controls 5-12
5.5.9 LCS/LCO 3.3.2—Double-Shell Tank and Aging Waste Facility Tank Waste Temperature Controls 5-13
5.5.10 LCO 3.3.3-Tank 241-AY-102 Annulus Ventilation System 5-14
5.5.11 AC 5.7—Nuclear Criticality Safety 5-15
5.5.12 AC 5.9—Flammability Controls 5-15
5.5.13 AC 5.10—Ignition Controls 5-16
5.5.14 AC 5.11—Flammable Gas Monitoring Controls 5-17
5.5.15 AC 5.12—Transfer Controls 5-18
5.5.16 AC 5.13—Encasement Seal Loop Controls 5-20
5.5.17 AC 5.14—Emergency Preparedness 5-20
5.5.18 AC 5.16—Dome Loading Controls 5-21
5.5.19 AC 5.17—Excavation Controls 5-21
5.5.20 AC 5.18—High-Efficiency Particulate Air Filter Controls 5-22
5.5.21 AC 5.19—Process Instrumentation and Measuring and Test Equipment 5-22
5.5.22 AC 5.20—Transfer Pump Administrative Lock Controls 5-23

CONTENTS (Cont'd)

5.5.23 AC 5.22—Transfer System Cover Removal Controls 5-24
5.5.24 AC 5.23—Caustic Transfer Controls 5-24
5.5.25 AC 5.25—Ventilation Controls 5-24
5.5.26 AC 5.26—Tank 241-C-106 Waste Temperature Controls . . 5-25
5.6 DESIGN FEATURES 5-26
5.6.1 Waste Retrieval Sluicing System 5-27
5.7 INTERFACES WITH TECHNICAL SAFETY REQUIREMENTS FROM OTHER FACILITIES 5-27
5.8 REFERENCES 5-28

LIST OF TABLES

5-1 Hazard and Accident Analyses and Technical Safety Requirement Cross-Reference T5-1

5-2 BIO Addendum Chapter and Administrative Control Technical Safety Requirement Cross-Reference T5-8

5.0 DERIVATION OF TECHNICAL SAFETY REQUIREMENTS

5.1 INTRODUCTION

The necessary preventive and mitigative features determined to be essential for the Waste Retrieval and Sluicing System (WRSS) in Chapter 3.0 and from the designation of Safety-Class and Safety-Significant features in Chapter 4.0 of this Addendum are identified in this chapter. Information necessary for preparing the separate Technical Safety Requirement (TSR) document (HNF-SD-WM-TSR-006, *Tank Waste Remediation System Technical Safety Requirements*) required by DOE 5480.22, *Technical Safety Requirements*, is also provided in this chapter.

TSRs define acceptable conditions, safe boundaries, and management or Administrative Controls (ACs) that ensure safe operation of a nuclear facility and reduce the potential risk to the public and onsite workers from uncontrolled releases of radioactive or other hazardous material or from radiation exposures caused by inadvertent criticality (DOE 5480.22).

This chapter consists of summaries and references to pertinent sections of the main text of the BIO and this Addendum that describe design and Administrative Control (AC) features needed to prevent or reduce the consequences of an accident specific to the WRSS. The Safety Limits (SLs), Limiting Control Settings (LCSs), Limiting Conditions for Operation (LCOs), Surveillance Requirements, ACs, and Design Features form the basis of the TSR document and provide the logical link between the TSRs and the main text of the BIO and this Addendum.

This chapter includes the following:

- Qualitative and quantitative TSR selection criteria
- Operational modes that designate distinguishable facility configurations
- Derivation of minimum staffing levels for each operational mode
- Derivation discussion of the TSR controls selected
- A list of design features not covered by the TSRs
- Identification of TSR interfaces with other Tank Waste Remediation System (TWRS) and Hanford Site facilities and the controls
- Tables that link the hazard and accident analyses and the TSRs
- A table that provides cross-references to other chapters in this Addendum

5.2 REQUIREMENTS

The primary requirements specific for this chapter, the hazard and accident analyses, and the TSR document are included in DOE 5480.22 and DOE 5480.23, *Nuclear Safety Analysis Reports*.

5.3 TECHNICAL SAFETY REQUIREMENTS COVERAGE

5.3.1 Summary

The suite of TSRs for analyzed hazards/accidents for the WRSS operations is summarized in Table 5-1. This table lists TSR controls per the accident analyses in Chapter 3.0 and the evaluation of safety structures, systems, and components (SSCs) in Chapter 4.0, "Safety Structures, Systems, and Components," of this Addendum. It also provides a brief derivation basis for each control related to the specific accident. Table 5-1 is written to provide a road-map to the respective accident analysis section or to Section 5.5, "Technical Safety Requirement Derivation," where derivation details are arranged by TSR control.

The required TSR controls for the WRSS are necessary and prudent for public safety, significant Defense-in-Depth, significant worker safety, and for preventing and mitigating radiological and toxicological consequences.

Worker safety for the WRSS is covered by integrated safety management programs (e.g., HNF-SD-WM-HSP-002 *Tank Farms Health and Safety Plan* [HASP]). These safety programs described in the HASP reduce the likelihood and potential impacts of events and are covered by their respective regulatory and contractual systems of basic requirements. Therefore, these programs are not repeated as AC programs in the TSR document. A cross-reference to the other chapters in this Addendum is provided in Table 5-2. DOE 5480.22 requires the TSR document to include AC programs for nuclear criticality safety, organization and management (including minimum staffing), and occurrence reporting at a minimum.

5.3.2 Criteria

The Executive Summary and other appropriate sections of the BIO main text discuss the control selection process from initial hazard analysis identification to selection of hardware or administrative programs for controls. The section below outlines the criteria that were considered in control selection. These criteria were also used for the WRSS.

5.3.2.1 Control Selection Criteria. The following elements were considered in selection of controls for the WRSS to the extent practical.

- **Contractor Management Directives, Policies, and Procedures**—Controls were not selected for environmental-only hazards unless the radiological or toxicological consequences exceed offsite or onsite

risk guidelines. Environmental controls for the WRSS are, however, discussed in Section 3.3.2.3.4 and listed in Table C-4 of this Addendum.

- **Analysis Assumptions**—Controls were selected to protect major assumptions that could be affected by an operating activity or equipment operation.
- **Sensitivity Analysis**—Controls were selected for less significant analysis assumptions if variability of the assumption significantly affected consequences.
- **Reliability**—Controls were selected for equipment systems that have demonstrated high reliability in the tank farm environment.
- **Optimization**—Controls were selected that could address multiple accidents to minimize implementation costs.
- **Priorities**—Controls were selected first, to prevent, then to mitigate; first, to involve passive systems, then actively engineered systems; and first, to use engineered controls, then administrative programs.
- **Practical Safety-Class/Safety-Significant Designation**—Controls were selected that would have value in being designated Safety-Class or Safety-Significant.
- **Risk Guidelines**—Controls were identified that would bring the frequency or consequences within acceptable risk guideline values when possible; the process was iterative and may require more than one control.
- **Conservatism**—Controls were selected to drive consequences further below risk guidelines for additional risk reduction.
- **Facility Worker Safety**—Controls were selected that would not significantly increase radiological or toxicological exposures to the facility worker.
- **Significant Defense-in-Depth**—Controls were selected from the suite of Defense-in-Depth items if they significantly minimized risk.
- **Operational Flexibility**—Controls were selected that minimized the need for additional operators or maintenance personnel.
- **Procedure Minimization**—Controls were selected that minimized the need for new or significantly modified operational or ACs.
- **Existing Hardware**—Controls were selected primarily for equipment systems that were in place.
- **Cost/Benefit**—Controls were selected, when new systems were needed, that minimized costs on a qualitative basis.

- **Impacts on TWRS Mission**—Controls were selected that minimized impact to characterization and stabilization activities.

- **Applicability/Consistency**—Controls were selected if they mirrored activities already in progress in the field.

5.3.3 Safety Structures, Systems, and Components Not Provided With Explicit Technical Safety Requirement Coverage

The Safety-Class and Safety-Significant SSCs for the WRSS that have not been provided with explicit TSR coverage include the WRSS Transfer System level detection, and backflow prevention. All other safety SSCs are provided with TSR coverage with an LCO or are included in an AC program. The bases for not providing TSR coverage are provided in the following paragraphs.

5.3.3.1 WRSS Transfer System. The WRSS transfer encasements are Safety-Class SSCs. There are no TSR controls for these safety SSCs, because they are passive Design Features, and their safety function is managed by configuration control processes. These SSCs were not credited as a control in the analysis but were identified as a key assumption in maintaining their encasements, directing leakage to leak detection systems. Leak detection systems are managed by the TSR control LCO 3.1.3, "Transfer Leak Detection Systems."

5.3.3.2 Tank Level Detection Systems. Tank level detection systems are Safety-Significant SSCs. There are no TSR controls for these safety SSCs because the accident analyses identified these as being needed only to support performance of material balance calculations during waste transfers according to AC 5.12, "Transfer Controls." Process and measuring and test equipment are further managed by AC 5.19, "Process Instrumentation and Measuring and Test Equipment."

5.3.3.3 Backflow Prevention. Backflow prevention devices are Safety-Significant. Requirements for backflow prevention devices are implemented by the Industrial Hygiene Program described in Chapter 8.0, "Hazardous Material Protection."

5.4 DERIVATION OF FACILITY MODES

5.4.1 Operational Modes

The operational modes (Operation and Limited) for TWRS facilities are included in the TSR document (HNF-SD-WM-TSR-006). The modes for Tank 241-C-106 and Tank 241-AY-102 during WRSS operations are the same as other single-shell and Aging Waste Facility (AWF) tanks and are defined as follows:

- **Operation**—Waste is being stored. Waste transfers to or from any tank are authorized. Routine operational and maintenance activities may be performed.

- **Limited**—Waste is being stored. Waste transfers to or from any tank are not authorized except in accordance with an approved recovery plan. Routine operational and maintenance activities may be performed.

A mode is the state of an individual tank at a given time. A particular support system may provide services for several individual tanks, with each tank operating in a different mode. Under these circumstances, the applicable mode for the support system is the most restrictive mode applicable to any of the tanks being provided with supporting services.

5.4.2 Minimum Staffing Levels

The minimum operations shift complement in the Operation and Limited Modes for TWRS facilities are included in the TSR document. They are one shift manager/operational engineer, five nuclear operators, two Radiological Control Technicians, and the Emergency Control Center staff. This minimum staff in each mode is considered adequate to perform the minimum safety functions necessary to protect the health and safety of the public, onsite workers, and the environment during normal operations, and abnormal and emergency conditions. The minimum staff does not include individuals necessary to support WRSS operations, therefore additional staff is required. Additional staff is necessary to establish continuous communications between the control rooms for Tanks 241-C-106 and 241-AY-102 during WRSS activities. During sluicing operations in accordance with AC requirements additional staff are required to perform additional surveillances in support of AC 5.18.

5.5 TECHNICAL SAFETY REQUIREMENT DERIVATION

This section details the level of control and derivation bases for the TSRs organized by control for WRSS. It can be used as an interface to link the accident analyses and the TSRs. It defines why WRSS controls were chosen.

Tables 5-1 and 5-2 provide road maps to controls or accident summaries depending on starting points. Table 5-1 is applicable if starting from accidents or Chapter 3.0 of this Addendum. Table 5-2 is applicable if starting from an overall summary of the remaining BIO Addendum chapters.

All controls are discussed below except for ACs 5.1 through 5.6. Sections AC 5.1, "Purpose," AC 5.2, "Contractor Responsibility," and AC 5.3, "Compliance," define the need for the following AC provisions, and clarify responsibility per good management practice. These three controls could be rewritten as a preface to the AC section, but they were included in this format because they are recognizable to Operations personnel from past Operational Safety Requirements (OSRs). Sections AC 5.4, "Technical Safety Requirement Violation," AC 5.5, "Occurrence Reporting," and AC 5.6, "Organization," satisfy the requirements of DOE 5480.22, Section 9.3.(5). This DOE order section requires ACs for reporting deviations and identifying staffing requirements.

5.5.1 Level of Control Criteria

The section below outlines the criteria for determining the level of control; for example, when an AC is chosen over a Limiting Condition for Operation control. Generalized criteria may be found in U.S. Department of Energy (DOE) orders. The following criteria, while considered to meet the generalized order criteria, reflect an interpretive base determined by coordination with other DOE Site TSR writing personnel, a DOE-sponsored TSR training course, contractor procedures, reactor standard technical specifications (NUREG 1431, *Standard Technical Specifications, Westinghouse Plants*), the proposed TSR rule, and Site expertise. The criteria were used for the BIO TSRs and for the WRSS TSRs.

5.5.1.1 Safety Limits/Limiting Control Settings. There are no additional SLs for WRSS specific accidents. The criteria for selection of the SLs are:

- A primary passive barrier failed (e.g., tank, piping).
- Passive barrier failure was the direct result of exceeding a physical parameter.
- This physical parameter can be directly measured by field personnel.
- Radiological or toxicological consequences without controls exceeded offsite and onsite risk guidelines.

LCSs are setpoints on safety systems that control process variables to prevent exceeding SLs. The specific setpoints are chosen so that, if exceeded, sufficient time is available to automatically or manually correct the condition before exceeding SLs. The LCSs are usually combined with their respective LCOs. By combining the LCSs with the LCOs, the LCS setpoint becomes part of the operability of the system. Furthermore, placing the applicability, actions, and surveillances for a system in a single location enhances safety and reduces the complexity of the TSR document.

5.5.1.2 Limiting Conditions for Operation Versus Administrative Controls. Accidents/hazards exceeding offsite or onsite risk guidelines, that are not candidates for SLs per the criteria listed above, are candidates for either LCOs or ACs. ACs are considered as important to the control philosophy as LCOs; they are not treated as less meaningful controls for safety. An AC is selected over an LCO if the control is better controlled by a program than a direct measurement and ensuing action. The following comparison identifies the process used in determining the proper type of control for reduction of risk. This approach is consistent with the guidance in DOE-STD-3009-94, *Preparation Guide for U.S. Department of Energy Nonreactor Nuclear Facility Safety Analysis Reports*, which states: "The decision as to whether an operating limit (such as an LCO) or a TSR AC is more appropriate is left to the judgment of the SAR Preparer."

- Parameter Measurement

  LCO—A process parameter or hardware is available for measurement by field operating or maintenance personnel and is available in real time or near to real time.

  AC—The control involves several parameters required for the accident to occur, or requires an analysis of field parameters by engineering or management personnel, or involves a parameter obtainable only by physical sampling requiring analytical delay time, or no measurement equipment is available.

- Control of Field Condition

  LCO—Hazard/accident results solely from exceeding a physically monitored parameter (e.g., continuous air monitor [CAM] interlock actuation).

  AC—Hazard/accident does not occur as a result of exceeding a physically monitored parameter but requires a combination of conditions to occur. Examples are: noncompliance with procedures, involvement of multiple organizations or personnel, or involving solely the corroboration of field information to protect accident analysis assumptions, or programmatic deficiencies.

- Response Action

  LCO—Exceeding a specific parameter requires immediate actions to reduce risk that are achievable through field personnel and resulting operating or maintenance procedures.

  AC—Exceeding parameter or condition either requires no immediate applicable actions to reduce risk, or actions are complex requiring evaluation and possible further data gathering, or actions solely involve emergency response personnel for mitigation.

- Surveillances

  LCO—Equipment or instrumentation is required to monitor a specific parameter, and it is appropriate to have surveillances to demonstrate operability.

  AC—Conditions leading to accident either cannot be measured by instrumentation; or surveillance intervals may be long because parameter of concern changes slowly; or a condition does not require immediate action, and sufficient recovery time exists to permit response action.

- Prior Control Method

  LCO—Hazard is currently controlled by an LCO or a lower-tiered control involving system(s) measurement and response.

  AC—Hazard is currently managed by an AC or other program.

5.5.2 LCO 3.1.1—Transfer System Covers and Entry Doors

5.5.2.1 Purpose. This control to ensure Transfer System Covers and Entry Doors operability is derived from the "Surface Leak Resulting in a Pool" accident in Section 3.4.2.15, and "Spray Leak from Structure accident in Section 3.4.2.16, for WRSS. The release of radioactive material without controls exceeds offsite and onsite radiological risk guidelines for both accidents. The release of toxicological material without controls exceeds the onsite risk guidelines for the spray leak from structure accident. Ensuring that transfer system covers are placed correctly over their associated structures (and the removable plugs are installed), in conjunction with the other controls selected, reduces the offsite consequences to meet or be within risk guidelines for both accidents and reduces the onsite consequences to within risk guidelines for the spray leak from structure by containing sprayed/splashed materials within the transfer system structure. The analysis in Sections 3.4.2.15 and 3.4.2.16 takes specific credit for the Transfer System Covers and Entry Doors when calculating consequences with controls.

This control is closely associated with "Transfer Pump Administrative Lock Controls" (AC 5.20) and "Transfer System Cover Removal Controls" (AC 5.22). Since surface leaks and spray leaks are improbable when their motive force is removed via administrative locks on pumps, as outlined within AC 5.20, Transfer System Cover operability controls are relaxed (i.e., not applicable) under these conditions. Surface leaks and spray leaks are likewise improbable when multiple isolation valves separate the transfer path and the structure of concern. In this situation, an alternate (and less stringent) control, as outlined within AC 5.22, is allowed in lieu of the Transfer System Cover and Entry Doors control.

5.5.2.2 Derivation Criteria. This control was selected because it takes advantage of existing hardware; Transfer system covers are already an integral part of transfer structure design. In addition, implementation of this control minimizes modifications needed to administrative procedures, as the process for the inspection of Transfer system covers associated with planned transfers is already a part of existing procedures.

5.5.3 LCO 3.1.3—Transfer Leak Detection Systems

5.5.3.1 Purpose. This control is required for the "Subsurface Leak Remaining Subsurface," Section 3.4.2.13, the "Subsurface Leak Resulting in Pool," Section 3.4.2.14 and the "Surface Leak Resulting in a Pool," Section 3.4.2.15 accidents for WRSS. Ensuring that transfer leak detection systems are operable reduces offsite consequences of the surface leak accident to meet the risk guidelines by limiting the amount of waste material released. This is

accomplished by a combination of alarm and operator response to shut down associated transfer pumps, thus removing the motive force behind the leak and limiting further leakage. The onsite consequences still remain above risk guidelines for the surface leak resulting in a pool. This control reduces the consequences to below the onsite radiological risk guidelines for the subsurface leaks.

This control is closely associated with the "Transfer Pump Administrative Lock Controls" (AC 5.20). Since subsurface leaks and surface leaks are improbable when their motive force is removed via administrative locks on pumps, as outlined within AC 5.20, transfer leak detection system operability controls are relaxed (i.e., not applicable) under these conditions.

5.5.3.2 Derivation Criteria. This control was selected because it protects the analysis assumptions and uses existing hardware. Transfer leak detection systems are already installed in all transfer-related structures.

5.5.4 LCO 3.1.4—Ventilation Stack Continuous Air Monitor Interlock Systems

5.5.4.1 Purpose. This control applies to the following accident scenarios: (1) spray leak from structure in Section 3.4.2.16; (2) high-efficiency particulate air (HEPA) filter failure—exposure to high temperature or pressure in Section 3.4.2.2; and (3) unfiltered release in Section 3.4.2.3. Based on the results of the spray leak analysis, the release of radioactive material without controls could exceed offsite and onsite risk guidelines and the onsite risk guidelines for the release of toxicological material. The ventilation stack CAM interlock to the ventilation system exhaust fan is credited in the analysis with stopping the ventilation system thereby terminating an unfiltered release. This control applies to spray leaks inside actively ventilated tanks. This action reduces the potential consequences of a pressurized spray leak event during transfers to maintain radiological consequences below risk guidelines.

Based on the results of the HEPA filter failure analysis and the unfiltered release analysis, the release of radioactive material without controls could exceed onsite risk guidelines. The ventilation stack CAM interlock that detects potential HEPA filter failure and unfiltered release and shuts off the ventilation system exhaust fan within 10 minutes for Tank 241-C-106 is credited in the analysis with stopping the ventilation system and terminating an unfiltered release. This action reduces the potential consequences of an unfiltered release to maintain radiological consequences equal to or below risk guidelines when a HEPA filter fire occurs or a high-pressure event occurs that impacts the HEPA filter.

A related control is AC 5.18, "HEPA Filter Controls." It requires verification that the HEPA filter and prefilter housing radiation levels are less than or equal to 200 mrem/h. This control also requires verification that the radiological dose contribution of the 296-C-006 HEME and HEMF is below 100 mrem/h, requires the 241-AZ-702 system HEGA filters to be changed before the upstream HEPA filter in the associated filter train has been replaced 20 times, or upon indication of degraded HEPA filter performance, and

requires efficiency testing of the HEPA filters upstream of the HEGA filters. This protects a key accident analysis assumption used to calculate the quantity of waste material accumulated on the filters based on the radionuclide content, thereby limiting the inventory on the filters available for release.

5.5.4.2 Derivation Criteria. The ventilation stack CAM interlock systems were selected as the controls because the analysis with controls assumes the ventilation system shuts off within 10 minutes, thereby terminating the unfiltered release. Based on human factor considerations, it is not feasible to have operator monitoring and subsequent response actions within 10 minutes, therefore, it was necessary to rely on an automatic feature to shutdown the ventilation flow through an unfiltered pathway. The CAM interlock was selected because it exists for the majority of applications where the control is required or could be installed where only a CAM alarm currently is available.

Although the accident analysis did not assume a specific setpoint for CAM interlock actuation it did assume that the CAM interlock will actuate on increasing radiation level. The functional requirement is that the CAM activates an interlock after detecting a radiation level that exceeds the preset level based on normal operating practices. Since a specific setpoint was not identified in the analysis, a setpoint of 10,000 cpm was selected, based on normal operating practice and to allow flexibility in adjustment of the setpoint based on radon decay products. Normal setpoint ranges are 4,000-6,000 cpm to allow activation just above background.

5.5.5 LCO 3.2.1—Double-Shell Tank and Aging Waste Facility Tank Ventilation Systems

5.5.5.1 Purpose. This control derives from the flammable gas deflagrations accident in Section 3.4.2.8 for the WRSS and the main text of the BIO. The release of radioactive material without controls could exceed onsite risk guidelines and offsite risk guidelines for certain scenarios. Maintaining the 241-AY-102 primary tank ventilation system in conjunction with the "Primary Tank Leak Detection Systems" (LCO 3.2.6), "Flammability Controls" (AC 5.9), "Ignition Controls" (AC 5.10), "Flammable Gas Monitoring Controls" (AC 5.11), and "Emergency Preparedness" (AC 5.14) reduces the risk from the steady state release, accumulation and ignition of flammable gases. Due to technical uncertainties related to this hazard, and the nature of the analysis contained in the main text of the TWRS BIO, the risk reduction in unquantified. In addition, for "Tank Bump" accident (Section 3.4.2.11) and "Unfiltered Release" accident (Section 3.4.2.3), primary tank ventilation provides adequate cooling capacity in Tank 241-AY-102 in conjunction with the LCO 3.3.3, "Tank 241-AY-102 Annulus Ventilation System" and AC 5.25, "Ventilation Controls." Maintaining temperature below local saturation temperature prevents the tank bump and unfiltered release accidents.

5.5.5.2 Derivation Criteria. Although the historical requirements related to active ventilation of the primary tanks were not established to control flammable gases, available gas sample results indicate that flammable gas concentration in all sampled tanks are less than 5% of the lower flammability

limit (LFL). These controls require near constant operation of the exhausters for the primary tank ventilation system for DSTs and AWF tanks. Therefore, one of the key elements of the flammable gas control strategy is the use of currently installed active ventilation systems on the primary tanks to dilute and remove flammable gases that are continuously released from stored waste. The DST and AWF tank ventilation systems were selected because the existing systems have demonstrated the necessary operational performance. The ventilation system is credited with providing a flow rate in the headspace that maintains the steady-state flammable gas concentration well below the LFL.

5.5.6 LCO 3.2.2—Single-Shell Tank Ventilation Systems-Active

5.5.6.1 Purpose. This control applies to the flammable gas deflagrations accident in Section 3.4.2.8 for the WRSS. The release of radioactive material without controls could exceed onsite risk guidelines and offsite risk guidelines for certain scenarios. Maintaining the active SST ventilation systems in conjunction with "Flammability Controls" (AC 5.9), "Ignition Controls" (AC 5.10), "Flammable Gas Monitoring Controls" (AC 5.11), and "Emergency Preparedness" (AC 5.14) reduces the risk of a flammable gas deflagration, but due to the technical uncertainties related to this hazard, and the nature of the analysis contained in the main text of the BIO, the risk reduction is unquantified. In addition, for "Tank Bump" accident (Section 3.4.2.11) and "Unfiltered Release" accident (Section 3.4.2.3), Tank 241-C-106 Ventilation System provides cooling capacity in conjunction with AC 5.26, "Tank 241-C-106 Waste Temperature Controls."

5.5.6.2 Derivation Criteria. This control was selected because it took credit for an existing system that had demonstrated the necessary operational performance. Although the historical requirements related to active ventilation of the SSTs with active ventilation systems were not established to control flammable gases, available gas sample results indicate that flammable gas concentrations in all sampled tanks are less than 5% of the LFL. These controls require near-constant operation of the exhausters for the SSTs with active ventilation systems. Therefore, one of the key elements of the flammable gas control strategy is the use of currently installed active ventilation systems on the tanks to dilute and remove flammable gases that are continuously released from stored waste. The ventilation system is credited with maintaining the steady-state flammable gas concentration well below the LFL.

5.5.7 LCO 3.2.6—Primary Tank Leak Detection Systems

5.5.7.1 Purpose. This control is applicable to two accident scenarios: flammable gas deflagrations in Section 3.4.2.8, and surface leak resulting in a pool in Section 3.4.2.15 for the WRSS. For flammability scenarios the release of radioactive material without controls could exceed onsite risk guidelines and offsite risk guidelines for certain scenarios. Maintaining the primary tank leak detection systems in conjunction with the "DST and AWF Tank

Ventilation Systems" (LCO 3.2.1), "Flammability Controls" (AC 5.9), "Ignition Controls" (AC 5.10), "Flammable Gas Monitoring Controls" (AC 5.11), and "Emergency Preparedness" (AC 5.14) reduces risk but due to technical uncertainties related to this hazard, and the nature of the analysis contained in the main text of the BIO, the risk reduction is unquantified.

Based on the results of the analysis for the surface leak resulting in a pool, the release of radioactive material without controls could exceed the offsite and onsite radiological risk guidelines. Maintaining the primary tank leak detection systems in conjunction with the "Transfer Controls" (AC 5.12), "Transfer System Covers and Entry Doors" (LCO 3.1.1), "Transfer Leak Detection Systems" (LCO 3.1.3), "Emergency Preparedness" (AC 5.14), "Excavation Controls" (AC 5.17), "Transfer Pump Administrative Lock Controls" (AC 5.20), and "Transfer System Cover Removal Controls" (AC 5.22) reduces the consequences to meet the risk guidelines for offsite, and the onsite radiological consequences are still above the risk guidelines. Primary tank leakage detection controls are credited in the analysis to provide operators information on potential waste accumulation in the annulus from a transfer system leak. This allows termination of the transfer before the annulus overflows to produce a surface pool.

5.5.7.2 Derivation Criteria. The primary tank leak detection systems were selected as the controls because they took credit for an existing system that had demonstrated the necessary operational performance. The primary tank leak detection system consists of either a CAM that detects the presence of airborne radionuclides in the annulus ventilation exhaust stream or a conductivity probe leak detection system installed in the annulus between the primary and secondary tanks on DSTs and AWF tanks. The primary tank leak detection system will detect primary tank leakage as well as waste infiltration to the annulus.

5.5.8 LCS/LCO 3.3.1—Single-Shell Tank Waste Temperature Controls

5.5.8.1 Purpose. These controls for Tank 241-C-106 are required based on the accident analysis for a tank bump in Section 3.4.2.11, liner breach caused by steam between the liner and concrete shell in Tank 241-C-106 accident scenario in Section 3.4.2.12, and unfiltered release in Section 3.4.2.3. For the tank bump and liner breach accidents, consequences could exceed offsite and onsite radiological risk guidelines and exceed onsite toxicological guidelines. For the unfiltered release accident, consequences could exceed onsite radiological risk guidelines. Temperature controls for Tank 241-C-106 during and after WRSS operations to prevent an unfiltered release or a liner breach due to steam between the steel liner and concrete shell are included in AC 5.26, "Tank 241-C-106 Waste Temperature Controls." A liner breach because of steam under the liner could cause a rapid steam pressurization of the tank headspace. AC 5.26 establishes a new saturation temperature during and after WRSS operations to prevent a liner breach. An unfiltered release could occur because of overheating of the tank. Ventilation controls to inspect portions of the ventilation ductwork on Tank 241-C-106, to prevent an unfiltered release, are included in AC 5.25, Ventilation Controls."

The controls for waste temperature prevent exceeding temperatures at which tank bumps (including steam release events) could occur. Temperature controls reduce the probability of the accident. The waste temperature controls consist of waste temperature limits and monitoring. The monitoring systems provide operators with information on waste temperatures in tanks susceptible to a tank bump, and alert them to take actions necessary to prevent exceeding temperatures at which tank bumps can occur. Programmatic controls for the temperature monitoring systems in AC 5.19 are discussed in Section 5.5.21.

This control is closely associated with "SST Ventilation Systems-Active" (LCO 3.2.2). The active ventilation system for Tank 241-C-106 is one method to control waste temperature by removing heat from the tank headspace.

This control is also associated with "Transfer Controls" (AC 5.12). Transfer controls are imposed during WRSS operations to ensure that planned transfer parameters such as level and heat generation rate are consistent with existing tank conditions.

5.5.8.2 Derivation Criteria. Waste temperature controls were selected because temperature is the parameter of concern, is under the control of operations, and is monitored with existing systems. In addition, implementation of temperature controls minimizes modifications needed to administrative procedures, as the process for monitoring temperatures is already a part of existing procedures. Temperature can be controlled by a variety of methods (e.g., ventilation, engineered heat removal, limiting activities in the tank).

5.5.9 LCS/LCO 3.3.2—Double-Shell Tank and Aging Waste Facility Tank Waste Temperature Controls

5.5.9.1 Purpose. These controls for Tank 241-AY-102 are required based on the accident analyses for a tank bump in Section 3.4.2.11 (in this addendum) and unfiltered release in Section 3.4.2.3 (in this addendum). For the tank bump accident, consequences could exceed offsite and onsite radiological risk guidelines and onsite toxicological risk guidelines. For the unfiltered release accident, consequences could exceed onsite risk guidelines. An unfiltered release could occur because of overheating of the tank. Ventilation controls for Tank 241-AY-102 to prevent a tank bump (and unfiltered release) are included in AC 5.25, "Ventilation Controls."

The controls for waste temperature prevent exceeding temperatures at which tank bumps (including steam release events) could occur. Temperature controls reduce the probability of the accident. The waste temperature controls consist of waste temperature limits and monitoring. The monitoring systems provide operators information on waste temperatures in tanks susceptible to a tank bump, and alert them to take actions necessary to prevent exceeding temperatures at which tank bumps can occur. Programmatic controls for the temperature monitoring systems in AC 5.19 are discussed in Section 5.5.21.

This control is closely associated with "DST and AWF Tank Ventilation Systems" (LCO 3.2.1), and "Tank 241-AY-102 Annulus Ventilation System" (LCO 3.3.3). The active ventilation systems for Tank 241-AY-102 are the primary method to control waste temperature by removing heat from the tank headspace, sides, and bottom.

This control is also associated with "Transfer Controls" (AC 5.12). Transfer controls are imposed during WRSS operations to ensure that planned transfer parameters such as level and heat generation rate are consistent with existing tank conditions.

5.5.9.2 Derivation Criteria. Waste temperature controls were selected because temperature is the parameter of concern, is under the control of operations, and is monitored with existing systems. In addition, implementation of temperature controls minimizes modifications needed to administrative procedures, as the process for monitoring temperatures is already a part of existing procedures. Temperature can be controlled by a variety of methods (e.g., ventilation, engineered heat removal, limiting activities in the tank).

5.5.10 LCO 3.3.3-Tank 241-AY-102 Annulus Ventilation System

5.5.10.1 Purpose. This control for tank 241-AY-102 is required based on the accident analyses for a tank bump in Section 3.4.2.11 and unfiltered release in Section 3.4.2.3. For the tank bump accident, consequences could exceed offsite and onsite radiological risk guidelines and onsite toxicological risk guidelines. For the unfiltered release accident, consequences could exceed onsite radiological risk guidelines. An unfiltered release could occur because of overheating of the tank. Ventilation controls for Tank 241-AY-102 to prevent a tank bump (and unfiltered release) are included in AC 5.25, "Ventilation Controls."

The controls for waste temperature (LCO 3.3.2) prevent exceeding temperatures at which tank bumps (including steam release events) could occur. Temperature controls reduce the probability of the accident to within acceptable offsite and onsite risk guidelines. The waste temperature controls consist of waste temperature limits and monitoring. The annulus ventilation system provides a means to control waste temperature. The monitoring systems provide operators information on waste temperatures in tanks susceptible to a tank bump, and alert them to take actions necessary to prevent exceeding tank bump, and alert them to take actions necessary to prevent exceeding temperatures at which tank bumps can occur. Programmatic controls for the temperature monitoring systems in AC 5.19 are discussed in Section 5.5.21.

This control is closely associated with "DST and AWF Tank Ventilation Systems" (LCO 3.2.1). The active ventilation systems for Tank 241-AY-102 are the primary method to control waste temperature by removing heat from the tank headspace, sides, and bottom.

This control is also associated with "Transfer Controls" (AC 5.12). Transfer controls are imposed during WRSS operations to ensure that planned transfer parameters such as level and heat generation rate are consistent with existing tank conditions.

5.5.10.2 Derivation Criteria. This control is selected because the annulus ventilation system is used to control the temperature of the waste in Tank 241-AY-102. Temperature is the parameter of concern, is under the control of operations, and is monitored with existing systems. Temperature can be controlled by a variety of methods (e.g., ventilation, engineered heat removal, limiting activities in the tank).

5.5.11 AC 5.7—Nuclear Criticality Safety

5.5.11.1 Purpose. This control protects the accident analysis assumptions of the nuclear criticality accident in Section 3.4.2.1 for the WRSS. The bounding nuclear criticality accident is considered beyond extremely unlikely, therefore a quantitative accident analysis was not performed. Initial assumptions that were key to this conclusion were identified. The controls protect these initial condition assumptions.

5.5.11.2 Derivation Criteria. Several initial conditions were noted in the accident analysis. The controls included in the TSR represent those initial conditions necessary to protect key analysis assumptions, specifically, plutonium concentration subcriticality limit. An AC was appropriate because the controls apply to documenting criticality limits and controls in Criticality Safety Evaluation Reports and implementation in Criticality Prevention Specifications and procedures which are not under the direct control of the tank farm operator.

A nuclear criticality program is also required per DOE 5480.22, Section 9.e.(5) as one of the standard ACs. This control meets the intent of that requirement.

5.5.12 AC 5.9—Flammability Controls

5.5.12.1 Purpose. This control is required for the flammable gas deflagration accident in Section 3.4.2.8 for the WRSS. However, no change to this BIO control was identified as a result of the WRSS accident analysis. Based on the results of the analysis for the flammable gas deflagrations in DSTs, the release of radioactive material without controls could exceed onsite risk guidelines and offsite risk guidelines for certain scenarios. Maintaining the flammability controls in conjunction with the "DST and AWF Tank Ventilation Systems" (LCO 3.2.1), "Primary Tank Leak Detection Systems" (LCO 3.2.6), "Ignition Controls" (AC 5.10), "Flammable Gas Monitoring Controls" (AC 5.11), and "Emergency Preparedness" (AC 5.14) reduces risk but due to technical uncertainties related to this hazard, and the nature of the analysis contained in the main text of the BIO, the risk reduction is unquantified.

Based on the results of the analysis for the flammable gas deflagrations in SSTs, the release of radioactive material without controls could exceed onsite risk guidelines and offsite risk guidelines for certain scenarios. Maintaining the flammability controls in conjunction with the active SST ventilation systems (LCO 3.2.2), "Ignition Controls" (AC 5.10), "Flammable Gas Monitoring Controls" (AC 5.11), and "Emergency Preparedness" (AC 5.14) reduces risk but due to technical uncertainties related to this hazard, and the nature of the analysis contained in the main text of the BIO, the risk reduction is unquantified.

5.5.12.2 Derivation Criteria. The administrative program for flammability controls is credited in the reduction of frequency of a flammable gas deflagration. This control identifies flammable gas Facility Group assignments for Tank 241-AY-102 and Tank 241-C-106.

5.5.13 AC 5.10—Ignition Controls

5.5.13.1 Purpose. This control applies to several WRSS accidents: fire in contaminated area in Section 3.4.2.4, flammable gas deflagrations in Section 3.4.2.8, organic solvent fire in Section 3.4.2.9, and in-tank fuel fire/deflagration in Section 3.4.2.10.

Based on the results of the analysis for the fire in contaminated area, the release of radioactive and toxic material without controls could exceed onsite risk guidelines. Maintaining the ignition controls in conjunction with "Emergency Preparedness" (AC 5.14) reduces the accident frequency below the risk guidelines.

Based on the results of the analysis for the flammable gas deflagrations, the release of radioactive material without controls could exceed onsite and offsite risk guidelines for most cases. Maintaining the ignition controls in conjunction with the "DST and AWF Tank Ventilation Systems" (LCO 3.2.1), the active SST ventilation systems (LCO 3.2.2), "Primary Tank Leak Detection Systems" (LCO 3.2.6), "Flammability Controls" (AC 5.9), "Flammable Gas Monitoring Controls" (AC 5.11), and "Emergency Preparedness" (AC 5.14) reduces risk but due to technical uncertainties related to this hazard, and the nature of the analysis contained in the main text of the BIO, the risk reduction is unquantified.

Based on the results of the organic solvent fire analysis, the release of radioactive and toxic materials without controls could exceed onsite risk guidelines. Maintaining the ignition controls in conjunction with "Transfer Controls" (AC 5.12), "Emergency Preparedness" (AC 5.14), and "HEPA Filter Controls" (AC 5.18) does not reduce the accident frequency or consequences below the risk guidelines for all scenarios.

Based on the results of the analysis for the in-tank fuel fire/ deflagration, the release of radioactive and toxic materials without controls could exceed onsite risk guidelines. Maintaining the ignition controls in conjunction with Transfer Controls" (AC 5.12), "Emergency Preparedness" (AC 5.14), and "HEPA Filter Controls" (AC 5.18) does not reduce the frequency or consequences of the event to within risk guidelines.

5.5.13.2 Derivation Criteria. The administrative program to control ignition sources is credited primarily in the reduction of frequency of the accident scenarios for which the control was selected. The controls apply to fire in contaminated area, reducing the frequency to within risk guidelines; to flammable gas deflagrations, reducing the frequency; to organic solvent fire, reducing the frequency and protecting the facility worker with significant Defense-in-Depth key elements; and to in-tank fuel fire/deflagration, reducing the frequency and protecting the facility worker with significant Defense-in-Depth key elements.

5.5.14 AC 5.11—Flammable Gas Monitoring Controls

5.5.14.1 Purpose. This control applies to the flammable gas deflagration accident analysis presented in Section 3.4.2.8. The results of the analysis for the flammable gas deflagrations in DSTs indicate that the release of radioactive material without controls could exceed onsite risk guidelines and offsite risk guidelines for certain scenarios. Maintaining the flammable gas monitoring controls in conjunction with the "DST and AWF Tank Ventilation Systems" (LCO 3.2.1), "Primary Tank Leak Detection Systems" (LCO 3.2.6), "Ignition Controls" (AC 5.10), "Flammability Controls" (AC 5.9), and "Emergency Preparedness" (AC 5.14) reduces risk but due to technical uncertainties related to this hazard, and the nature of the analysis contained in the main text of the BIO, the risk reduction is unquantified.

Based on the results of the analysis for the flammable gas deflagrations in SSTs, the release of radioactive material without controls could exceed onsite risk guidelines and offsite risk guidelines for certain scenarios. Maintaining the flammable gas monitoring controls in conjunction with the active SST ventilation systems (LCO 3.2.2), "Ignition Controls" (AC 5.10), "Flammability Controls" (AC 5.9), and "Emergency Preparedness" (AC 5.14) reduces risk but due to technical uncertainties related to this hazard, and the nature of the analysis contained in the main text of the BIO, the risk reduction is unquantified.

5.5.14.2 Derivation Criteria. Flammable gas monitoring is used as part of the flammable gas hazard management strategy. These controls prevent the introduction of an uncontrolled or errant spark source into a location when and where flammable gas concentrations are above a level of concern for a fire, deflagration, or detonation. Therefore, flammable gas monitoring is required during manned activities, during certain unmanned activities, and upon loss of ventilation. These controls are credited in reducing the frequency of the flammable gas deflagration scenario and represents activities currently in progress in the tank farms.

The applicable key elements of AC 5.11 for WRSS are (a), (b) and (c). Key element (d) protects a key assumption associated with double-contained receiver tanks and does not apply to WRSS.

Key element (e) represents ignition control methodologies specific for WRSS operations. These actions are added because of the continued potential significant consequences of the flammable gas deflagration accident. The actions specified do not quantitatively control the consequences to below risk guidelines, but enhance facility worker protection.

5.5.15 AC 5.12–Transfer Controls

5.5.15.1 Purpose. This control applies to several WRSS accidents. The controls apply to organic solvent fire in Section 3.4.2.9, in-tank fuel fire in Section 3.4.2.10, tank bump in Section 3.4.2.11, liner breach due to steam between steel liner and concrete shell in Tank 241-C-106 in Section 3.4.2.12, subsurface leak remaining subsurface in Section 3.3.2.13, subsurface leak resulting in pool in Section 3.4.2.14, surface leak resulting in a pool in Section 3.4.2.15, and spray leak from structure in Section 3.4.2.16.

Based on the results of the in tank fuel fire and organic solvent fire analyses, the release of radioactive and toxic materials without controls could exceed onsite risk guidelines. Maintaining the transfer controls in conjunction with "Ignition Controls" (AC 5.10), "Emergency Preparedness" (AC 5.14), and "HEPA Filter Controls" (AC 5.18) does not reduce the accident frequency or consequences below the risk guidelines for all scenarios. The transfer controls include a compatibility evaluation to minimize the potential for introducing organic solvents into tanks.

Based on the results of the tank bump analysis, the release of radioactive material without controls could exceed onsite risk guidelines and offsite radiological risk guidelines. Maintaining the transfer controls (which require compatibility analysis and periodic evaluation of the amount of the heat-generating material transferred) in conjunction with "DST and AWF Ventilation Systems" (LCO 3.2.1), "SST Waste Temperature Controls" (LCO 3.3.1), "DST and AWF Tank Waste Temperature Controls" (LCO 3.3.2), "Tank 241-AY-102 Annulus Ventilation System" (LCO 3.3.3), "Ventilation Controls" (AC 5.25), "Process Instrumentation and Measuring and Test Equipment" (AC 5.19), and "Tank 241-C-106 Waste Temperature Controls" (AC 5.26) prevents the accident. The transfer controls include a compatibility evaluation to ensure that transfers do not produce conditions in a tank (e.g., high-sludge level and high heat load) so that, if tank cooling were inoperable, there would be a possibility of creating a tank bump before cooling was restored. The transfer controls also include a material balance after each sluicing batch of 12 hours maximum duration during sluicing to ensure that planned transfer parameters, such as level and heat generation rate, are consistent with existing tank conditions.

Based on the results of the liner breach due to steam between steel liner and concrete shell in Tank 241-C-106 accident, the consequences without controls could exceed onsite and offsite radiological risk guidelines and onsite toxicological risk guidelines. Maintaining transfer controls in conjunction with the "SST Waste Temperature Controls" (LCO 3.3.1), "Process Instrumentation and Measuring and Test Equipment" (AC 5.19), and

"Tank 241-C-106 Waste Temperature Controls" (AC 5.26) reduces the consequences below the risk guidelines. The transfer controls include a requirement to ensure that the final tank state is within analyzed conditions.

Based on the results of the subsurface leak remaining subsurface analysis, the release of radioactive material without controls exceeds onsite radiological risk guidelines. Maintaining the transfer controls in conjunction with "Transfer Leak Detection Systems" (LCO 3.1.3), "Encasement Seal Loop Controls" (AC 5.13) and "Transfer Pump Administrative Lock Controls" (AC 5.20), "Excavation Controls" (AC 5.17), and the design feature of the double-encased pipe reduce the consequences below the risk guidelines. The transfer controls include material balances, configuration management, independent route verification, and establishing communications between the control rooms for Tanks 241-C-106 and 241-AY-102. These controls minimize the potential for a misrouting and facilitate the detection of leakage.

Based on the results of the subsurface leak resulting in a pool analysis, the release of radioactive material without controls could exceed the offsite and onsite radiological risk guidelines. Maintaining the transfer controls in conjunction with "Transfer Leak Detection System," (LCO 3.1.3) and "Emergency Preparedness" (AC 5.14) reduces the consequences to meet the risk guidelines for offsite, and the onsite radiological consequences are still above the risk guidelines. The transfer controls include material balances, configuration management, independent route verification, and establishing communications between the control rooms for Tanks 241-C-106 and 241-AY-102. These controls minimize the potential for a misrouting and facilitate the detection of leakage.

Based on the results of the analysis for the surface leak resulting in a pool, the release of radioactive material without controls could exceed the offsite and onsite radiological risk guidelines. Maintaining the transfer controls in conjunction with the "Transfer System Covers and Entry Doors" (LCO 3.1.1), "Transfer Leak Detection Systems" (LCO 3.1.3), "Primary Tank Leak Detection Systems" (LCO 3.2.6), "Emergency Preparedness" (AC 5.14), "Excavation Controls" (AC 5.17), "Transfer Pump Administrative Lock Controls" (AC 5.20), and "Transfer System Cover Removal Controls" (AC 5.22) reduces the consequences to meet the risk guidelines for offsite, and the onsite radiological consequences are still above the risk guidelines. The transfer controls include material balances, configuration management, vehicle restrictions, cap/blanks on open nozzles, and establishing communications between the control rooms for Tanks 241-C-106 and 241-AY-102. These controls minimize the potential for a misrouting, overflows from a misrouting, and facilitate the detection of leakage.

Based on the results of the spray leak from structure analysis, the release of radioactive material without controls exceeds the offsite and onsite radiological risk guidelines and onsite toxicological risk guidelines. Maintaining the transfer controls in conjunction with the "Transfer System Covers and Entry Doors" (LCO 3.1.1), "Ventilation Stack CAM Interlock Systems" (LCO 3.1.4), "Encasement Seal Loop Controls" (AC 5.13), "Transfer Pump Administrative Lock Controls" (AC 5.20), and "Transfer System Cover Removal Controls" (AC 5.22) reduces the consequences below the risk guidelines. The transfer controls include configuration management, vehicle restrictions, and

independent route verification. These controls minimize the potential for a misrouting, facilitate the detection of leakage and protect the transfer lines from vehicle damage.

5.5.15.2 Derivation Criteria. The transfer controls were selected to reduce consequences below risk guidelines where possible, reflect current operational practices, protect the analysis assumptions, and use existing systems to the maximum extent possible.

5.5.16 AC 5.13—Encasement Seal Loop Controls

5.5.16.1 Purpose. This reduces the consequences of a leak in the primary piping by ensuring that material is directed into the pit and activates transfer leak detection. This protects key assumptions in the following two accidents: subsurface leak remaining subsurface (Section 3.4.2.13) and spray leak from structure (Section 3.4.2.16). This control ensures that if a leak occurred in primary piping it would be directed toward pit leak detection, and would not pressurize the encasement, causing a spray through abovegrade encasement test riser extensions or WRSS transfer system extensions.

5.5.16.2 Derivation Criteria. Leak detection, cover blocks, and transfer controls are the primary controls for the noted accidents. This control is specific since it protects a key assumption of plant configuration in the analysis; namely, that leaked material will be detected or that it will not cause pressurized conditions.

5.5.17 AC 5.14—Emergency Preparedness

5.5.17.1 Purpose. This control is required to respond to leaks on the surface to limit pool sizes per the subsurface leak resulting in a pool accident as specified in Section 3.4.2.14. This is the only accident where emergency response is required to reduce consequences. This control works together with LCO 3.1.3, "Transfer Leak Detection Systems" and AC 5.12, "Transfer Controls," to ensure minimal pool size and proper emergency response.

The control also represents a significant Defense-in-Depth item that is justifiably elevated to control status for mitigating the following pool and fire accidents: "Fire in Contaminated Area" (Section 3.4.2.4), "Flammable Gas Deflagrations" (Section 3.4.2.8), "Organic Solvent Fire" (Section 3.4.2.9), "In-Tank Fuel Fire/Deflagration" (Section 3.4.2.10), and "Surface Leak Resulting in a Pool" (Section 3.4.2.15). Because this control was originally a Defense-in-Depth item for these accidents, actual mitigation results are not quantified in the analyses.

5.5.17.2 Derivation Criteria. The subsurface leak resulting in a pool accident takes credit for evacuation of personnel from the vicinity of the pool. This activity is a programmatic response rather than an operator-directed event. It involves the coordination of several operational organizations and maintenance crafts, thus making emergency preparedness a logical programmatic control.

This control is also applied to those accidents where site conditions and controls degrade. Fire is an example of a situation where emergency responses activate facility worker protection controls (e.g., safety equipment) and protect Site personnel through fire-fighting and evacuation procedures. This control was selected for all of the fire-related accidents because, in a fire event, it is necessary to protect personnel before attempting to determine cause and subsequent actions. Likewise, for waste leak pools on the surface, this control helps isolate personnel to minimize exposures to radioactive and hazardous material. Lastly, this control requires the development of responses to earthquakes, thus ensuring proper protection of personnel and property and the public when earthquakes produce indeterminate damage or disrupt normal communications and safety controls.

5.5.18 AC 5.16–Dome Loading Controls

5.5.18.1 Purpose. This control minimizes the risk of dropping objects through pit floors and tank domes. This relates to the tank failure due to excessive loads (Section 3.4.2.6). Based on the results of the tank failure due to excessive loads analysis, the release would exceed the onsite radiological and toxicological guidelines without controls. The dome loading controls prevent the accident scenario from occurring.

5.5.18.2 Derivation Criteria. The controlling of lifted loads was detailed as an AC because the varied methodologies for control are limited to the use of streamers (tag lines), temporary barriers to restrict lift height, and the need for restrictions over certain vessels. Because the control requires several parameters, and because of the conservatisms in the analysis, exceeding 6 m (20-ft) does not directly cause the accident (e.g., no credit taken for piping or pumps within the pit). This is consistent with several of the criteria noted in Section 5.3.2.1. This control was chosen because of its minimal impact on operational activities.

The dome loading controls in AC 5.16 are a realistic summary. For example, there are no specific controls on snow or ash loading because these were noted in the analysis as being insignificant. Of great value for the analysis, however, is the requirement for baselining and managing changing loads. This detail protects the assumptions of the analysis.

5.5.19 AC 5.17–Excavation Controls

5.5.19.1 Purpose. This control protects the facility worker, as well as onsite and offsite personnel, from spray or pool consequences while excavating piping systems during a transfer. The WRSS accidents related to this control are subsurface leak remaining subsurface (Section 3.4.2.13), surface leak resulting in a pool (Section 3.4.2.15) and spray leak from an underground waste transfer line (Section 3.4.2.17). This accident is associated with the spray and pool scenarios, and the control strategy is preventive to minimize the probability of the excavation accident and mitigative to reduce consequences below risk guidelines.

5.5.19.2 Derivation Criteria. The control represents a broad selection of current operational activities to cover the varied contingencies during excavation activities. It does not rely solely upon an excavation permit process, since transfers could be initiated after proper completion of permitting. These activities involve a variety of field personnel and include several activities prior to actual excavation, thus qualifying this control as administrative.

5.5.20 AC 5.18—High-Efficiency Particulate Air Filter Controls

5.5.20.1 Purpose. These controls apply to several accidents for the WRSS. The controls apply to HEPA filter failure-exposure to high temperature or pressure (Section 3.4.2.2), unfiltered release (Section 3.4.2.3), flammable deflagrations (Section 3.4.2.8), organic solvent fire (Section 3.4.2.9) and in-tank fuel fire/deflagration (Section 3.4.2.10) to limit the radioactive inventory available for release from the HEPA filters that is assumed in the accident analysis.

Based on the results of the HEPA filter failure analysis and unfiltered release analysis, the release of radioactive material without controls could exceed onsite risk guidelines for DSTs and SSTs with active ventilation. The consequences are reduced by: (1) maintaining the HEPA filter and prefilter housing contact dose radiation level at less than or equal to 200 mrem/h; verifying that the radiological dose contribution of the 296-C-006 HEME and HEMF is below 100 mrem/h; requiring the 241-AZ-702 system HEGA filters to be changed before the upstream HEPA filter in the associated filter train has been replaced 20 times, or upon indication of degraded HEPA filter performance; and performing efficiency testing of the HEPA filters upstream of the HEGA filters, and (2) an operable CAM interlock, per LCO 3.1.4, that stops the ventilation system.

Based on the results of the organic solvent fire analysis and in-tank fuel fire/deflagration analysis, the release of radioactive material without controls could exceed onsite risk guidelines. Monitoring the ventilation system filter dose rates in conjunction with "Ignition Controls" (AC 5.10), "Transfer Controls" (AC 5.12), and "Emergency Preparedness" (AC 5.14) does not reduce the accident frequency or consequences below the risk guidelines for all scenarios.

5.5.20.2 Derivation Criteria. The HEPA filter control on radioactive loading was selected because it was a key analysis assumption and reflected current practices for filter monitoring and replacement. The control also applied to multiple accidents and reduced the consequence to within acceptable risk guidelines where possible.

5.5.21 AC 5.19—Process Instrumentation and Measuring and Test Equipment

5.5.21.1 Purpose. This provides a support control for the process instrumentation and measuring and test equipment used to verify that process

parameters comply with the TSRs when specific instrumentation and associated surveillances are not included in the TSR for the WRSS. This provides controls for the instrumentation used to monitor temperatures to comply with the tank bump analysis (Section 3.4.2.11), unfiltered release (Section 3.4.2.3) and the liner breach due to steam between steel liner and concrete shell in Tank 241-C-106 (Section 3.4.2.12), as well as instrumentation used to verify process parameters for the ACs in the TSR. This control on the process instrumentation and measuring and test equipment ensures that process parameters are properly monitored.

5.5.21.2 Derivation Criteria. This control was included because for some process parameters included in the TSR, it is not essential to specify the particular instrumentation or measuring equipment to demonstrate compliance with the process parameter, provided the instrumentation or equipment used to monitor the parameter is maintained. If the analysis credits a specific process parameter (e.g., temperature) but does not require specific instrumentation (e.g., credit is not taken for interlock actuation upon reaching the setpoint), then any instrumentation or measuring equipment can be used, provided it has the capability to monitor the required parameter. This support control was selected because it provides operational flexibility to use various instrumentation and equipment to measure TSR parameters, provided it complies with requirements of AC 5.19 while ensuring the safety functions assumed in the accident analysis are met.

5.5.22 AC 5.20—Transfer Pump Administrative Lock Controls

5.5.22.1 Purpose. The control to establish a program for administrative lock controls on waste transfer pumps is prompted by the WRSS accident analysis for a subsurface leak remaining subsurface (Section 3.4.2.13), surface leak resulting in a pool (Section 3.4.2.15), and spray leak from structure (Section 3.4.2.16).

When active transfer pumps are under administrative lock, the potential for pressurizing the transfer system is significantly decreased. This greatly reduces the risk of all three accidents identified above, as the motive force behind the accidents (i.e., a pressurized system) is eliminated.

This control is closely associated with a number of other controls: "Transfer System Covers" (LCO 3.1.1), and "Transfer Leak Detection Systems" (LCO 3.1.3). These controls are established based on the potential for leaks caused by the pressurization of the waste transfer system. Since leaks are improbable when their motive force is removed, these controls are relaxed (i.e., not applicable) when all physically connected transfer pumps are administratively locked per AC 5.20.

5.5.22.2 Derivation Criteria. An AC was selected because it is applicable to multiple accident scenarios, and is implemented and monitored similar to other lock programs onsite. This control reduces implementation costs, and allows operational flexibility, because implementation of this control allows relaxation of other transfer system leak-related controls while transfer pumps are administratively locked.

5.5.23 AC 5.22—Transfer System Cover Removal Controls

5.5.23.1 Purpose. The Transfer System Cover removal controls program is applicable to a surface leak resulting in a pool (Section 3.4.2.15), and spray leak from structure (Section 3.4.2.16). Without controls, the surface leak resulting in a pool and the spray leak have unacceptable onsite and offsite consequences.

When two or more closed valves in series separate the waste transfer route and a transfer system structure, the potential for waste leakage through the valves with sufficient pressurization of the piping to cause significant leakage within the structure is minimal. This greatly reduces the probability of the accidents identified above from occurring within the structure. In this situation, an alternative (and less stringent) control, using the Transfer System Cover removal control program, is allowed in lieu of the Transfer System Cover control.

5.5.23.2 Derivation Criteria. This control was selected because it allows operational flexibility through the relaxation of Transfer System Cover operability controls when a minimum of two closed valves in series separates the transfer route and the structure of concern. Because it involves monitoring of varied configurations rather than strict operability (though this is the prime definition for transfer cover operability), an AC format was selected.

5.5.24 AC 5.23—Caustic Transfer Controls

5.5.24.1 Purpose. This control minimizes the risk of a caustic spray leak. The caustic spray leak program is applicable to the accident analysis for a caustic spray leak (Section 3.4.2.5) for the WRSS. The caustic spray leak, when not controlled by TSR controls, is assumed to have onsite and offsite toxicological consequences.

Requiring sodium hydroxide cargo tanks to provide proof of DOT specification and restricting the operating pressure will decrease the potential for the cargo tank to rupture due to overpressurization. This reduces the probability of the accident occurring. Requiring traffic barriers also reduces the probability of the accident occurring.

5.5.24.2 Derivation Criteria. This control was selected because it represents a minimal cost to implement and it does not involve the installation of new equipment.

5.5.25 AC 5.25—Ventilation Controls

5.5.25.1 Purpose. The ventilation controls program is derived from the accident analyses for an unfiltered release (Section 3.4.2.3), and tank bump (Section 3.4.2.11) for the WRSS. Without controls, the unfiltered release exceeds the onsite radiological evaluation guidelines, and the tank bump

exceeds the onsite and offsite radiological evaluation guidelines and onsite toxicological evaluation guidelines.

With a visual inspection of aboveground recirculation ventilation ductwork for Tank 241-C-106 every 24 hours during sluicing, the potential for an unfiltered release through damaged ductwork is minimal. This greatly reduces the probability of the unfiltered release accident from occurring. In this situation, the control prevents continued operation of a breached duct found during sluicing. This control applies only after the new Tank 241-C-106 ventilation system (296-C-006) is installed.

With the periodic determination of the cooling capacity requirements for Tank 241-AY-102 and provision of the necessary cooling capability, the potential for a tank bump due to exceeding the saturation temperature of the waste is prevented. This greatly reduces the probability of the tank bump accident from occurring. In this situation, the control protects the temperature limits in LCS/LCO 3.3.2, "DST and AWF Tank WASTE Temperature Controls," which prevents the saturation temperature of the waste from being reached because the necessary cooling to maintain temperatures below the saturation temperature is being provided. This control is applicable only to Tank 241-AY-102 after 0.61 m (2 ft) of waste have been added to the tank by the WRSS.

5.5.25.2 Derivation Criteria. The ventilation inspection control was selected because it took credit for an existing program that demonstrates the necessary operational performance. The visual inspection of the ventilation ductwork will identify damage or leaks (e.g., condensate dripping) so that WRSS operations can be stopped by preventing continued use of a breached duct found during sluicing. This control applies only to Tank 241-C-106 after the 296-C-006 ventilation system is installed and sluicing is in progress.

The cooling capacity control was selected because it allows for determination of the cooling requirements for Tank 241-AY-102 based on the heat generation rate conditions determined in the tank and then provides the necessary cooling requirements. The annulus ventilation system will typically provide the necessary cooling but, based on the heat generation rate determined, it is anticipated that operation of the annulus ventilation system will only be required when more than 2 ft of waste has been transferred to Tank 241-AY-102.

5.5.26 AC 5.26—Tank 241-C-106 Waste Temperature Controls

5.5.26.1 Purpose. The controls for SST waste temperature during WRSS operations are required based on the WRSS accident analysis for liner breach due to steam between the steel liner and the concrete shell in Tank 241-C-106 (Section 3.4.2.12) and the unfiltered release due to overheating (Section 3.4.2.3). This control also applies to Tank 241-C-106 for WRSS tank bump (Section 3.4.2.11) during and after sluicing. The bounding accidents for tank bump and liner breach exceeded both onsite and offsite radiological risk guidelines, and consequences were above onsite radiological risk guidelines for unfiltered release. Also, the tank bump and liner breach bounding accidents exceeded onsite toxicological risk guidelines.

5.5.26.2 Derivation Criteria. AC 5.26 replaces LCS/LCO 3.3.1 during and after sluicing operations. This control is designed to protect a more restrictive temperature limit for saturation conditions, to prevent a liner breach scenario. This limit varies with the hydrostatic head due to waste, therefore an AC program was determined to be most appropriate.

Waste temperature controls were selected because temperature, the parameter of concern, is under the control of operations and is monitored with existing systems. In addition, implementation of temperature controls minimizes modifications needed to administrative procedures, as the process for monitoring temperatures is already a part of existing procedures. Temperature can be controlled by a variety of methods (e.g., ventilation, engineered heat removal). The monitored temperatures can then be modelled to determine the maximum tank bottom temperatures.

Level monitoring is also under the control of operations and is observed with existing systems. Using the level detection system, the pressure at the tank bottom can be found, in order to determine the local saturation temperature of water.

5.6 DESIGN FEATURES

Design Features are those features not covered elsewhere in the TSRs and which, if altered or modified, would have a significant effect on safety. Design Features are normally permanently built-in features that do not require, or infrequently require, maintenance or surveillance and are normally not subject to change by Operations personnel. The categories of design features to be addressed in accordance with DOE 5480.22 include the following:

- Vital passive components, such as piping, vessels, supports, confinement structures, and containers
- Configuration and physical arrangement of the facility where safety is a concern including site characteristics, such as the locations of public access roads, collocated facilities, facility area boundaries, site boundaries, and distances to the nearest residences
- Building materials, if the safe operation of the facility depends on any component being constructed of a particular material.

Changes to Design Features are considered significant modifications. The unreviewed safety question process ensures that changes to Design Features are appropriately analyzed and controlled so that they do not adversely affect safe operation of the facility. The configuration management system that controls changes to Design Features is discussed in the main text of Section 4.15, "Configuration Management," of this BIO.

Design Features for TWRS facilities are included in the TSR document. Unique Design Features for the WRSS that, if altered or modified, would have a significant effect on safe operation are listed below. Descriptions of these Design Features are provided in Chapter 2.0 of this Addendum. Based on the criteria for Design Features in DOE 5480.22, passive features that are only

for environmental protection are not listed. Environmental features are, however, discussed in Chapter 3.0 of this Addendum. Radioactive and hazardous waste management control features are discussed in the main text of Section 4.6, "Radioactive and Hazardous Material Waste Management," of the BIO.

5.6.1 Waste Retrieval Sluicing System

Design Features for the WRSS include the following:

- Positive mechanical stops are provided on the remotely operated, hydraulically controlled sluicer in Tank 241-C-106 to limit nozzle travel to 115° vertically (0° reference is the nozzle pointed straight down). This prevents the sluice stream from impinging on an area above the tank liner and leaking into the liner from the top of the liner.

- Syphon protection (holes) is provided on the slurry distributor and the submersible sluice pump discharge lines within Tank 241-AY-102 to prevent a syphon when the slurry pumps or sluice pumps are shut down.

- The sluicer hose in Tank 241-C-106 is engineered to maintain structural integrity to prevent the hose from breaking off and causing a liner breach.

- The WASTE transfer pipe-in-pipe encasement confines leaks from the primary piping and channels waste leaked from the primary pipe to a transfer-associated structure where the leak can be detected. The encasement also provides outside protection against corrosion of the inside pipe.

- The weight of the removable plugs in cover blocks for the sluice slurry line flush connection pits on Tank 241-A4-102 exceeds the maximum lifting force caused by waste discharged from the open flush nozzle.

5.7 INTERFACES WITH TECHNICAL SAFETY REQUIREMENTS FROM OTHER FACILITIES

The TWRS Facility interfaces with other Hanford facilities are identified and discussed in Appendix B, "Facility and Process Description," of this BIO. TWRS programs are in place and are adequate to ensure that interactions with other facilities and their safety requirements do not affect the TWRS safety basis, and do not exceed the safety analyses requirements. There are no interface requirements that affect the WRSS safety basis.

5.8 REFERENCES

DOE 5480.22, 1996, *Technical Safety Requirements*, Change 2, U.S. Department of Energy, Washington, D.C.

DOE 5480.23, 1994, *Nuclear Safety Analysis Reports*, Change 1, U.S. Department of Energy, Washington, D.C.

DOE-STD-3009-94, 1994, *Preparation Guide for U.S. Department of Energy Nonreactor Nuclear Facility Safety Analysis Reports*, U.S. Department of Energy, Washington, D.C.

HNF-SD-WM-BIO-001, 1998, *Tank Waste Remediation System Basis for Interim Operation*, Rev. 1, Fluor Daniel Hanford, Inc., Richland, Washington.

HNF-SD-WM-HSP-002, 1998, *Tank Farms Health and Safety Plan*, Rev. 3, Lockheed Martin Hanford Corporation, Richland, Washington.

HNF-SD-WM-TSR-006, 1997, *Tank Waste Remediation System Technical Safety Requirements*, Rev. 0, Fluor Daniel Hanford, Inc., Richland, Washington.

NUREG 1431, 1992, *Standard Technical Specifications, Westinghouse Plants*, Rev. 0, U.S. Nuclear Regulatory Commission, Washington, D.C.

Table 5-1. Hazard and Accident Analyses and Technical Safety Requirement Cross-Reference. (7 sheets)

Analyzed accident and BIO Addendum section	Technical Safety Requirement	Control basis
Nuclear Criticality (3.4.2.1)	AC 5.7 Nuclear Criticality Safety - Establish CPSs based on CSERs - Recovery actions if limits exceeded - Criticality training program	AC 5.7 provides for a criticality safety program as required by DOE 5480.22, Section 9.e.(5). Implementation of these controls protects the assumptions in the accident analysis to prevent a criticality from occurring Criticality limits and controls are documented in CSERs and implemented in CPSs through procedures. Criticality safety training is provided and procedures identify the recovery actions in the event the CPS requirements are not met
HEPA Filter Failure-Exposure to High Temperature or Pressure (3.4.2.2)	LCO 3.1.4 Ventilation Stack CAM Interlock Systems AC 5.18 HEPA Filter Controls - Periodic radiation surveillance - Replacement based on accumulation - Aerosol test upon installation (AWF 241-AZ-702) - Periodic aerosol test (AWF 241-AZ-702)	LCO 3.1.4 controls consequences of accident to meet onsite radiological risk guidelines. CAM interlock detects increasing radiological effluent releases and stops the ventilation exhaust fan within 10 minutes AC 5.18 protects radioactive loading assumptions on ventilation system filters in accident analysis
Unfiltered Release (3.4.2.3)	AC 5.25 Ventilation Controls - Visual inspection of aboveground recirculation ventilation ductwork for Tank 241-C-106 every 24 hours during sluicing (only applies after the 296-C-006 ventilation system is installed) TSR controls in BIO Addendum 1, Section 3.4.2.2 (HEPA Filter Failure) and 3.4.2.11 (Tank Bump) also apply	AC 5.25 prevents continued operation of a damaged recirculation ventilation duct on Tank 241-C-106 (only applies after the 296-C-006 ventilation system is installed)

Table 5-1. Hazard and Accident Analyses and Technical Safety Requirement Cross-Reference. (7 sheets)

Analyzed accident and BIO Addendum section	Technical Safety Requirement	Control basis
Fire in Contaminated Area (3.4.2.4)	AC 5.10 Ignition Controls - Vehicle fuel system protection - Physical barriers outside tank farms - Speed limit controls AC 5.14 Emergency Preparedness - Response procedures	AC 5.10 provides controls to lessen the probability of the accident. Vehicle controls prevent the rupture of a vehicle fuel system which may result in a fire in a contaminated area (e.g., open pit) AC 5.14 represents a significant Defense-in-Depth control that has been elevated to a TSR. It provides direction for fire response and recovery activities
Caustic Spray Leak (3.4.2.5)	AC 5.23 Caustic Transfer Controls - Plastic sleeving around delivery piping - Caustic delivery system transfer pressure ≤ 125 psig or below sodium hydroxide cargo tanks specified maximum allowable operating pressure whichever is lower - Piping thickness - Sodium hydroxide cargo tanks meet applicable DOT specifications - Traffic barriers shall surround the cargo tank (e.g., traffic cones or stanchions and chains)	AC 5.23 provides controls to reduce the consequences and probability of the accident TSR controls are established for plastic sleeving around delivery piping (≥ 4 mil thickness) to prevent or mitigate the consequences of a spray leak. The limitations on the caustic delivery system pressure and piping thickness for caustic delivery reduces the consequences of a leak by reducing the leak rate. NaOH cargo tanks must meet applicable DOT inspections to minimize the potential for a tanker leak. Traffic barriers reduce the probability of a caustic leak
Tank Failure Due to Excessive Loads (3.4.2.6)	AC 5.16 Dome Loading Controls - Limits on load height - Hanford Site Hoisting and Rigging Manual for critical lifts - Uniform and concentrated load limits	AC 5.16 provides controls to prevent the accident and protect the onsite worker These controls limit the potential for a load damaging a waste retaining structure, resulting in an uncontrolled release
Tank Failure Due to Excessive Vacuum (3.4.2.7)	None	No credible tank failure and collapse due to an excessive vacuum scenario has been identified
Flammable Gas Deflagrations (3.4.2.8)	LCO 3.2.1 DST and AWF Tank Ventilation Systems LCO 3.2.2 SST Ventilation Systems - Active LCO 3.2.6 Primary Tank Leak Detection Systems AC 5.9 Flammability Controls AC 5.10 Ignition Controls AC 5.11 Flammable Gas Monitoring Controls AC 5.14 Emergency Preparedness - Response procedures AC 5.18 HEPA Filter Controls - Periodic radiation surveillance - Replacement based on accumulation	LCO 3.2.1, LCO 3.2.2, LCO 3.2.6, AC 5.9, AC 5.10,and AC 5.11 provide controls to lessen the probability of accident AC 5.14 represents a significant Defense-in-Depth control that has been elevated to a TSR. It provides direction for fire response and recovery activities AC 51.8 protects radioactive loading assumptions on ventilation system filters in accident analysis

Table 5-1. Hazard and Accident Analyses and Technical Safety Requirement Cross-Reference. (7 sheets)

Analyzed accident and BIO Addendum section	Technical Safety Requirement	Control basis
Organic Solvent Fire (3.4.2.9)	AC 5.10 Ignition Controls - Lightning (stop intrusive work, secure elevated equipment) - Barrier for hot metal during flame cutting - Vehicle fuel system protection - Physical barriers outside tank farms - Speed limit controls AC 5.12 Transfer Controls - Evaluate impact on organic solvent transfer AC 5.14 Emergency Preparedness - Response procedures AC 5.18 HEPA Filter Controls - Periodic radiation surveillance - Replacement based on accumulation - Aerosol test upon installation (AWF 241-AZ-702) - Periodic aerosol test (AWF 241-AZ-702)	AC 5.10 and AC 5.12 provide controls to lessen probability of accident, and AC 5.10 protects the facility worker with significant Defense-in-Depth key elements Ignition controls minimize the initiators (lightning, hot metal, and vehicle fuel fire) with sufficient energy to ignite an organic solvent fire AC 5.14 represents a significant Defense-in-Depth control that has been elevated to a TSR. It provides direction for fire response and recovery activities AC 5.18 protects radioactive loading assumptions on ventilation system filters in accident analysis
In-Tank Fuel Fire/Deflagration (3.4.2.10)	Note: This accident credits the same controls as the Organic Solvent Fire (3.4.2.9) above.	--

Table 5-1. Hazard and Accident Analyses and Technical Safety Requirement Cross-Reference. (7 sheets)

Analyzed accident and BIO Addendum section	Technical Safety Requirement	Control basis
Tank Bump (3.4.2.11)	LCO 3.2.1 DST and AWF Ventilation Systems LCS/LCO 3.3.1 SST Waste Temperature Controls - Temperature ≤ 205 °F (prior to start of sluicing) LCS/LCO 3.3.2 DST and AWF Tank Waste Temperature Controls - Temperature ≤ 195 °F (or 215 °F based on waste level) LCO 3.3.3 Tank 241-AY-102 Annulus Ventilation System - Operability AC 5.12 Transfer Controls - Ensure final tank state within analyzed conditions - Incremental waste transfer, with material balance after each sluicing batch of 12 hours maximum duration during transfer operations AC 5.19 Process Instrumentation and Measuring and Test Equipment - Calibrate and properly maintain AC 5.25 Ventilation Controls - Provide adequate cooling capacity for Tank 241-AY-102 after 2 ft of waste added (Primary and Annulus Ventilation Systems) AC 5.26 Tank 241-C-106 Waste Temperature Controls - Predict saturation temperatures at the bottom of Tank 241-C-106. Use predicted height of the waste throughout the incremental transfer and periodically monitor the waste temperature. - During the first two 1 ft transfer increments, the liquid level established before start of each sluicing increment will be maintained throughout the increment.	LCO 3.3.1, LCO 3.3.2, AC 5.12, AC 5.19, AC 5.25, and AC 5.26 provide controls to prevent accident LCOs 3.2.1 and 3.3.3 and AC 5.25 provide controls for operability of the ventilation systems in Tank 241-AY-102 for cooling after at least 2 ft of sludge from Tank 241-C-106 is transferred.
Liner Breach Caused by Steam Between the Steel Liner and Concrete Shell in Tank 241-C-106 (3.4.2.12)	LCS/LCO 3.3.1 SST Waste Temperature Controls - Temperature ≤ 205 °F (prior to start of sluicing) AC 5.12 Transfer Controls - Ensure final tank state within analyzed conditions AC 5.19 Process Instrumentation and Measuring and Test Equipment - Calibrate and properly maintain AC 5.26 Tank 241-C-106 Waste Temperature Controls - Establish temperature controls that are < T_{sat} for existing tank conditions [applies during and after sluicing]	LCO 3.3.1, AC 5.12, AC 5.19, and AC 5.26 provide controls to prevent accident

Table 5-1. Hazard and Accident Analyses and Technical Safety Requirement Cross-Reference. (7 sheets)

Analyzed accident and BIO Addendum section	Technical Safety Requirement	Control basis
Subsurface Leak Remaining Subsurface (3.4.2.13)	LCO 3.1.3 Transfer Leak Detection Systems AC 5.12 Transfer Controls - Material Balance after each sluicing batch of 12 hours maximum duration during sluicing - Establish communication between control rooms for Tanks 241-C-106 and 241-AY-102 during sluicing operations - Configuration management - Independent transfer route verification AC 5.13 Encasement Seal Loop Controls - Encasement drain line valve not closed AC 5.17 Excavation Controls (see 3.4.2.17) AC 5.20 Transfer Pump Administrative Lock Controls	LCO 3.1.3, and AC 5.12 represent controls to detect a leak and stop the transfer to protect the onsite and facility worker AC 5.12 requires calculation of solids loading after each sluicing batch to confirm analysis assumptions AC 5.13 protects a key assumption of the accident analysis AC 5.17 and AC 5.20 provide controls to lessen the probability of the accident
Subsurface Leak Resulting in Pool (3.4.2.14)	LCO 3.1.3 Transfer Leak Detection Systems AC 5.12 Transfer Controls - Material Balance after each sluicing batch of 12 hours maximum duration during sluicing - Establish communications between 241-C-106 and 241-AY-102 control rooms during sluicing operations - Configuration management - Independent route verification during transfer setup AC 5.14 Emergency Preparedness - Response procedures	LCO 3.1.3, AC 5.12 and AC 5.14 control consequences of accident from exceeding offsite risk guidelines
Surface Leak Resulting in a Pool (3.4.2.15)	LCO 3.1.1 Transfer System Covers and Entry Doors LCO 3.1.3 Transfer Leak Detection Systems LCO 3.2.6 Primary Tank Leak Detection Systems AC 5.12 Transfer Controls - Material Balance after each sluicing batch of 12 hours maximum duration during transfer operations - Establish communication between control rooms for Tanks 241-C-106 and 241-AY-102 during sluicing operations -Configuration management - Vehicle restrictions around transfer lines - Caps/blanks on open nozzles AC 5.14 Emergency Preparedness - Response procedures AC 5.17 Excavation Controls (see 3.4.2.17) AC 5.20 Transfer Pump Administrative Lock Controls AC 5.22 Transfer System Cover Removal Controls	LCO 3.1.1 Limits releases of aerosols generated by splatter inside the pit and limits shine and skyshine dose to onsite receptors LCO 3.1.3, LCO 3.2.6, AC 5.14, and AC 5.22 represent items which help control consequences of accident AC 5.12, AC 5.17, and AC 5.20, provide controls to lessen probability of accident AC 5.12 requires calculation of solids loading after each sluicing batch to confirm analysis assumptions

Table 5-1. Hazard and Accident Analyses and Technical Safety Requirement Cross-Reference. (7 sheets)

Analyzed accident and BIO Addendum section	Technical Safety Requirement	Control basis
Spray Leak from Structure (3.4.2.16)	LCO 3.1.1 Transfer System Covers and Entry Doors LCO 3.1.4 Ventilation Stack CAM Interlock Systems AC 5.12 Transfer Controls - Configuration management - Independent transfer route verification - Vehicle restrictions around transfer lines AC 5.13 Encasement Seal Loop Controls - Encasement drain line valve not closed AC 5.20 Transfer Pump Administrative Lock Controls AC 5.22 Transfer System Cover Removal Controls	AC 5.20 provides controls to lessen probability of accident to within acceptable offsite risk guidelines LCO 3.1.1 and LCO 3.1.4 control consequences of accident from exceeding onsite and offsite radiological risk guidelines and onsite toxicological risk guidelines. LCO 3.1.1 ensures the covers are installed AC 5.13 protects a key assumption of the accident analysis AC 5.12 and AC 5.22 represent significant Defense-in-Depth items which help lessen accident probability and control consequences of accident
Spray Leak from an Underground Waste Transfer Line (3.4.2.17)	AC 5.17 Excavation Controls - An excavation permit shall be required when excavating in areas where waste transfer lines exist. - Encased pipe outside of the tank farm boundaries shall be identified with permanent aboveground labels. - Waste transfers are prohibited through lines uncovered by excavation activities unless compensatory controls are established. - Waste transfers shall not be conducted in transfer lines located within approximately 15 ft of ongoing excavation activities. - Prior to initiation of an excavation activity, identify emergency response actions and establish communications between the excavation site and operations personnel to ensure immediate shutdown of waste transfers when leakage is indicated.	AC 5.17 provides controls to lessen the probability of the accident and to mitigate consequences to within acceptable onsite and offsite risk guidelines

Table 5-1. Hazard and Accident Analyses and Technical Safety Requirement Cross-Reference. (7 sheets)

Analyzed accident and BIO Addendum section	Technical Safety Requirement	Control basis
Natural Phenomena (3.4.2.18)	AC: Not required Note: Refer to BIO main text.	--

AC = Administrative Control.
AWF = Aging Waste Facility.
BIO = Tank Waste Remediation System Basis for Interim Operation.
CAM = continuous air monitor.
CPS = Criticality Prevention Specifications.
CSER = Criticality Safety Evaluation Report.
DST = double-shell tank.
HEPA = high-efficiency particulate air (filter).
LCO = Limiting Condition for Operation.
SHM = Standard Hydrogen Monitoring System.
SST = single-shell tank.
TSR = Technical Safety Requirement.
ULD = unit liter dose.

Table 5-2. BIO Addendum Chapter and Administrative Control Technical Safety Requirement Cross-Reference.

BIO Addendum Chapter	TSR Administrative Controls
Chapter 1 - Site Characteristics	None
Chapter 2 - Facility Description	None
Chapter 3 - Hazard and Accident Analyses	Table 5-1
Chapter 4 - Safety Structures, Systems, and Components	Table 5-1
Chapter 5 - Derivation of Technical Safety Requirements	Table 5-1
Chapter 6 - Prevention of Inadvertent Criticality	AC 5.7 - Nuclear Criticality Safety
Chapter 7 - Radiation Protection	AC 5.24 Safety Management Program
Chapter 8 - Hazardous Material Protection	None
Chapter 9 - Radioactive and Hazardous Waste Management	AC 5.24 Safety Management Program
Chapter 10 - Initial Testing, In-Service Surveillance, and Maintenance	None
Chapter 11 - Operational Safety	None
Chapter 12 - Procedures and Training	None
Chapter 13 - Human Factors	None
Chapter 14 - Quality Assurance	None
Chapter 15 - Emergency Preparedness Program	AC 5.14 - Emergency Preparedness
Chapter 16 - Provisions for Decontamination and Decommissioning	None
Chapter 17 - Management, Organization, and Institutional Safety Provisions	AC 5.2 - Contractor Responsibility AC 5.3 - Compliance AC 5.4 - Technical Safety Requirement Violations AC 5.5 - Occurrence Reporting AC 5.6 - Organization AC 5.8 - Source Inventory Controls

AC = Administrative Control.
TSR = Technical Safety Requirement.

CHAPTER 6.0
PREVENTION OF INADVERTENT CRITICALITY

This page intentionally left blank.

CHAPTER 6.0
PREVENTION OF INADVERTENT CRITICALITY

CONTENTS

6.0 PREVENTION OF INADVERTENT CRITICALITY 6-1
6.1 REQUIREMENTS 6-1
6.2 FACILITY IMPLEMENTATION 6-1
6.3 CRITICALITY CONCERNS 6-1
6.4 CRITICALITY CONTROLS 6-1
6.5 CRITICALITY PROTECTION PROGRAM 6-1
6.6 CRITICALITY INSTRUMENTATION 6-1
6.7 REFERENCES 6-1

This page intentionally left blank.

6.0 PREVENTION OF INADVERTENT CRITICALITY

This chapter contains information relevant to prevention of inadvertent criticality at Tank Waste Remediation System facilities as a result of the activities associated with the Waste Retrieval Sluicing System (WRSS).

6.1 REQUIREMENTS

See the main text of HNF-SD-WM-BIO-001, *Tank Waste Remediation System Basis for Interim Operation* (BIO) for requirements.

6.2 FACILITY IMPLEMENTATION

See the main text of the BIO for facility implementation.

6.3 CRITICALITY CONCERNS

HNF-SD-W320-CSA-001, *Criticality Safety Assessment of Tank 241-C-106 Remediation*, concludes that an inadvertent criticality as a result of the activities associated with WRSS is not considered possible for the plutonium concentration determined to be in tank waste and the WRSS process to be applied to the tank waste.

6.4 CRITICALITY CONTROLS

See the main text of the BIO for criticality concerns.

6.5 CRITICALITY PROTECTION PROGRAM

See the main text of the BIO for details of the criticality protection program.

6.6 CRITICALITY INSTRUMENTATION

See the main text of the BIO for criticality discussion.

6.7 REFERENCES

HNF-SD-W320-CSA-001, 1997, *Criticality Safety Assessment Of Tank 241-C-106 Remediation*, Rev. 1, Duke Engineering and Services Hanford, Inc., Richland, Washington.

HNF-SD-WM-BIO-001, 1998, *Tank Waste Remediation System Basis for Interim Operation*, Rev. 1, Fluor Daniel Hanford Inc., Richland, Washington.

This page intentionally left blank.

CHAPTER 7.0
RADIATION PROTECTION

This page intentionally left blank.

CHAPTER 7.0
RADIATION PROTECTION

CONTENTS

7.0 RADIATION PROTECTION 7-1
7.1 INTRODUCTION 7-1
7.2 REQUIREMENTS 7-1
7.3 PROJECT IMPLEMENTATION 7-1
7.4 REFERENCES 7-1

This page intentionally left blank.

7.0 RADIATION PROTECTION

7.1 INTRODUCTION

This chapter identifies the requirements for radiation protection for Tank Waste Remediation System Waste Retrieval Sluicing System facilities and operations and the implementing program documents. Implementation of these programmatic requirements by the Waste Retrieval Sluicing System assures that the appropriate radiation protection standards are incorporated in project design and construction.

7.2 REQUIREMENTS

Section 4.4, "Radiological Protection," of the main text of HNF-SD-WM-BIO-001, *Tank Waste Remediation System Basis for Interim Operation*, provides the radiation protection requirements and facility implementation for the Waste Retrieval Sluicing System.

7.3 PROJECT IMPLEMENTATION

The radiation dose and dose rate design limits for Waste Retrieval Sluicing System activities are delineated in HNF-SD-W320-FDC-001, *Functional Design Criteria for Tank 241-C-106 Waste Retrieval, Project W-320.* Design details required to comply with the criteria are verified in calculations completed by the architect-engineer/constructor. Programmatic elements of radiation protection are governed by existing Site and facility programs. Descriptions of radiation monitoring and instrumentation are given in the system description in Chapter 2.0, "Facility Description." No requirements above those identified in the programmatic documents were required for the Waste Retrieval Sluicing System.

7.4 REFERENCES

HNF-SD-W320-FDC-001, 1998, *Functional Design Criteria for Tank 241-C-106 Waste Retrieval, Project W-320*, Rev. 4, Numatec Hanford Company, Richland, Washington.

HNF-SD-WM-BIO-001, 1998, *Tank Waste Remediation System Basis for Interim Operation*, Rev. 1, Fluor Daniel Hanford, Inc., Richland, Washington.

This page intentionally left blank.

CHAPTER 8.0
HAZARDOUS MATERIAL PROTECTION

This page intentionally left blank.

CHAPTER 8.0
HAZARDOUS MATERIAL PROTECTION

CONTENTS

8.0 HAZARDOUS MATERIAL PROTECTION 8-1
8.1 INTRODUCTION 8-1
8.2 PROJECT IMPLEMENTATION 8-1
8.3 REFERENCE 8-1

This page intentionally left blank.

8.0 HAZARDOUS MATERIAL PROTECTION

8.1 INTRODUCTION

Hazardous material protection requirements for this facility are fully defined in Section 4.5, "Hazardous Material Protection," in the main text of HNF-SD-WM-BIO-001, *Tank Waste Remediation System Basis for Interim Operation.* No specific requirements related to occupational hazardous material protection above those specified in the main text are required for Waste Retrieval Sluicing System activities.

8.2 PROJECT IMPLEMENTATION

No specific requirements related to occupational hazardous material protection were identified for Waste Retrieval Sluicing System activities; therefore, no specific requirements related to occupational hazardous material protection above those identified in the programmatic documents are required.

8.3 REFERENCE

HNF-SD-WM-BIO-001, 1998, *Tank Waste Remediation System Basis for Interim Operation,* Rev. 1, Fluor Daniel Hanford Inc., Richland, Washington.

This page intentionally left blank.

CHAPTER 9.0
RADIOACTIVE AND HAZARDOUS WASTE MANAGEMENT

This page intentionally left blank.

CHAPTER 9.0
RADIOACTIVE AND HAZARDOUS WASTE MANAGEMENT

CONTENTS

9.0 RADIOACTIVE AND HAZARDOUS WASTE MANAGEMENT 9-1
9.1 INTRODUCTION 9-1
9.2 PROJECT IMPLEMENTATION 9-1
9.3 REFERENCE 9-1

This page intentionally left blank.

9.0 RADIOACTIVE AND HAZARDOUS WASTE MANAGEMENT

9.1 INTRODUCTION

Radioactive and hazardous waste management requirements for the Waste Retrieval Sluicing System are fully-defined in Section 4.6, "Radioactive and Hazardous Material Waste Management," in the main text of HNF-SD-WM-BIO-001, *Tank Waste Remediation System Basis for Interim Operation.*

9.2 PROJECT IMPLEMENTATION

No specific requirements related to radioactive and hazardous waste management above those identified in the programmatic documents were required for Waste Retrieval Sluicing System activities.

9.3 REFERENCE

HNF-SD-WM-BIO-001, 1998, *Tank Waste Remediation System Basis for Interim Operation*, Rev. 1, Fluor Daniel Hanford Inc., Richland, Washington.

This page intentionally left blank.

CHAPTER 10.0
INITIAL TESTING, IN-SERVICE SURVEILLANCE, AND MAINTENANCE

This page intentionally left blank.

CHAPTER 10.0
INITIAL TESTING, IN-SERVICE SURVEILLANCE, AND MAINTENANCE

CONTENTS

10.0 INITIAL TESTING, IN-SERVICE SURVEILLANCE, AND MAINTENANCE 10-1
10.1 INTRODUCTION 10-1
10.2 REQUIREMENTS 10-1
10.3 TESTING PROGRAM 10-2
10.3.1 Acceptance Testing 10-2
10.3.2 Pre-Operational Testing 10-3
10.4 PROCEDURES 10-3
10.5 IN-SERVICE SURVEILLANCE PROGRAM 10-3
10.5.1 Provisions for Testing and Calibrations 10-3
10.5.2 Control and Calibration of Measuring and Test Equipment 10-4
10.5.3 Training of Personnel Performing Surveillance 10-4
10.6 MAINTENANCE PROGRAM 10-4
10.7 REFERENCES 10-4

This page intentionally left blank.

10.0 INITIAL TESTING, IN-SERVICE SURVEILLANCE, AND MAINTENANCE

10.1 INTRODUCTION

This section identifies the requirements for initial testing, in-service surveillance, and maintenance of Tank Waste Remediation System (TWRS) Waste Retrieval Sluicing System (WRSS) safety structures, systems, and components (SSCs).

10.2 REQUIREMENTS

Initial testing, in-service surveillance, and maintenance policies and programs addressed in this section are regulated by the following U.S. Department of Energy orders:

- DOE 4330.4B, *Maintenance Management Program* (1994)[1]
- DOE 4700.1, *Project Management System*, Change 1 (1992)[1]
- DOE 5480.19, *Conduct of Operations Requirements for DOE Facilities*, Change 1 (1992)
- DOE 5480.23, *Nuclear Safety Analysis Reports*, Change 1 (1994)
- DOE-76-45/1, *Occupancy/Use Readiness Manual* (1992)

TWRS implementation of the initial testing, in-service surveillance, and maintenance program requirements is documented in the following:

- WHC-CM-1-8[2], *Work Management* (1996)
- WHC-CM-4-2[2], *Quality Assurance Manual* (1996)
- HNF-IP-0842, *TWRS Administration* (1996)
- WHC-SP-0850, *Maintenance Implementation Plan* (1994)

---

[1]DOE 4330.4B and DOE 4700.1 will be phased out/canceled upon meeting implementation conditions of DOE O 430.1.

[2]Refer to Appendix F, "Site-wide Controlled Manual Cross Reference Table," of the BIO for cross-walk between Site-wide controlled manuals (e.g., WHC-CM-X-XX) superseded by Fluor Daniel Hanford, Inc., FDH Procedures (e.g., HNF-PRO-XXX).

10.3 TESTING PROGRAM

The W320 Project is responsible for testing prior to Official Acceptance of Constructions (OAC) section II (HNF-CM-6-2, *Project Management*). Subsequent to OAC section II East Tank Farms Operations is responsible for testing. Testing will be performed following a graded approach with more extensive testing conducted on Safety-Class components, components included as Defense-in-Depth items and components not readily accessible following installation. Note: Testing was conducted based on the safety classification of the components in place at the time of the testing.

HNF-SD-W320-TP-001, *Project W-320, Tank 241-C Waste Retrieval Sluicing System Testing Plan*, was prepared to support test planning and define test controls for acceptance testing and operational testing of the Project W-320 equipment.

10.3.1 Acceptance Testing

To facilitate operational testing and phased turnover, the WRSS was broken into subsystems. Many of the WRSS subsystems are relatively simple systems consisting of standard structures, off the shelf components or non-electromechanical systems. These subsystems will be placed in service following acceptance testing and will not be subjected to operational testing.

The majority of acceptance testing was performed either by the equipment vendors or the construction contractor. Once acceptance testing is verified as complete, subsystems of the WRSS may be turned over to East Tank Farm Operations and placed into service.

Acceptance testing will be performed by Project W-320 on all WRSS equipment and component to demonstrate fabrication, assembly, installation, and construction requirements specified in design documents were met. Acceptance testing includes fabrication and cleanliness inspections; wire continuity checks and adjustment of electrical protective devices; adjustment of torque-limiting devices; instrument calibration; testing instrumentation loops; and adjustment of controllers, limit switches, and other similar devices. Acceptance testing may also include equipment mock up and run-in tests, conducted both prior to and following installation.

Project W-320 acceptance testing includes three basic types of tests: vendor factory acceptance tests; general construction acceptance tests; and final acceptance tests. All acceptance testing will be the responsibility of the construction contractor and will be successfully completed prior to turnover of a WRSS subsystem or component to Projects.

Some WRSS subsystems will be placed in service following acceptance testing and will not be subjected to operational testing. These subsystems are:

- 241-C-106 Electrical Power Supply System
- 241-AY-102 Electrical Power Supply System

- Air and Water Service System
- Fire Protection System
- 241-Air Intake Chiller System.

10.3.2 Pre-Operational Testing

Preoperational testing will be conducted by performing Operational Test Procedures (OTPs) on the sluicing, ventilation, and instrumentation systems after turnover to Tank Farms operations. These integrated OTPs test the overall operability of the systems and procedures, except that no waste is actually transferred. Any test exceptions are documented and resolved. It is important to note that this Safety Assessment envelopes the consequences of accidents during the planned preoperational test activities. During operational testing, components of the WRSS will be operated at defined parameters to ensure they are ready for full operational testing. At the completion of preoperational testing, conditions and test results will be evaluated by the test director and a determination will be made to proceed with operational testing.

10.4 PROCEDURES

Prior to Project turnover, test procedures will be developed, reviewed and approved in accordance with the W-320 Test Plan. After turnover, test procedures will be developed, reviewed, and approved in accordance with HNF-IP-0842.

10.5 IN-SERVICE SURVEILLANCE PROGRAM

In-service surveillance and inspections at TWRS WRSS will be performed according to DOE 4330.4B using a graded approach. Program requirements include periodic inspections to ensure that proper conditions, cleanliness, and housekeeping are maintained to support safe and reliable facility operations.

The surveillance program is conducted in conjunction with the maintenance and testing program. Together, these programs ensure continued operation of Safety-Class and Safety-Significant SSCs at TWRS WRSS.

10.5.1 Provisions for Testing and Calibrations

The TWRS program for surveillance, inspection, and testing activities ensures that equipment needed for safe, reliable facility operation performs as required and that the program responds to the requirements of DOE 4330.4B. At TWRS the design authority is responsible for planning and documenting surveillance tests and other tests as discussed in Chapter 17.0.

10.5.2 Control and Calibration of Measuring and Test Equipment

The control and calibration of measuring and test equipment shall follow the guidelines of DOE 4330.4B and HNF-IP-0842, Volume V, "Maintenance/Production Control."

10.5.3 Training of Personnel Performing Surveillance

Training of maintenance personnel shall follow the guidelines and procedures of HNF-IP-0842, Volume III, Section 10.6, "Maintenance Training," which include references to DOE 4330.4B and also apply to training used for in-service surveillance personnel.

10.6 MAINTENANCE PROGRAM

The TWRS operations manager has overall responsibility for operation and maintenance of the WRSS. The scope of the TWRS WRSS is discussed in Chapter 2.0. The TWRS WRSS maintenance program is conducted according to DOE 4330.4B, which provides general policy and objectives for establishing cost-effective maintenance and repairs.

10.7 REFERENCES

DOE 4330.4B, 1994, *Maintenance Management Program*, U.S. Department of Energy, Washington, D.C.

DOE 4700.1, 1992, *Project Management System*, Change 1, U.S. Department of Energy, Washington, D.C.

DOE 5480.19, 1992, *Conduct of Operations Requirements for DOE Facilities*, Change 1, U.S. Department of Energy, Washington, D.C.

DOE 5480.23, 1994, *Nuclear Safety Analysis Reports*, Change 1, U.S. Department of Energy, Washington, D.C.

DOE-76-45/1, 1992, *Occupancy/Use Readiness Manual*, U.S. Department of Energy, Washington, D.C.

DOE O 430.1, 1995, *Life Cycle Asset Management*, Change 1, U.S. Department of Energy, Washington, D.C.

HNF-CM-6-2, 1996, *Project Management*, Fluor Daniel Hanford, Inc., Richland, Washington.

HNF-IP-0842, 1997, *TWRS Administration*, Fluor Daniel Hanford, Inc., Richland, Washington.

HNF-SD-W320-TP-001, 1998, *Project W-320, Tank 241-C Waste Retrieval Sluicing System Testing Plan*, Rev. 1, Numatec Hanford Company, Richland, Washington.

WHC-CM-1-8, 1996, *Work Management*, Westinghouse Hanford Company, Richland, Washington.

WHC-CM-4-2, 1996, *Quality Assurance Manual*, Westinghouse Hanford Company, Richland, Washington.

WHC-SP-0850, 1992, *Maintenance Implementation Plan*, Rev. 1, Westinghouse Hanford Company, Richland, Washington.

This page intentionally left blank.

CHAPTER 11.0
OPERATIONAL SAFETY

This page intentionally left blank.

CHAPTER 11.0
OPERATIONAL SAFETY

CONTENTS

11.0 OPERATIONAL SAFETY 11-1
11.1 INTRODUCTION 11-1
11.2 REQUIREMENTS 11-1
11.3 PROJECT IMPLEMENTATION 11-1
11.4 REFERENCES 11-2

This page intentionally left blank.

11.0 OPERATIONAL SAFETY

11.1 INTRODUCTION

This chapter identifies requirements and implementing program documents for the Waste Retrieval Sluicing System (WRSS) operational safety and fire protection.

11.2 REQUIREMENTS

Operational safety requirements are defined for this facility in Section 4.8, "Conduct of Operations;" Section 4.9, "Work Control;" and Section 4.10, "Fire Protection Program" in the main text of HNF-SD-WM-BIO-001, *Tank Waste Remediation System Basis for Interim Operation* and in the HNF-SD-WM-TSR-006, *Tank Waste Remediation System Technical Safety Requirements*. Specific requirements for Waste Retrieval Sluicing System activities related to fire protection above those specified in the main text are noted in the following subsections.

11.3 PROJECT IMPLEMENTATION

A fire hazards analysis was performed by Columbia Energy and Environment Services Inc., for Waste Retrieval Sluicing System activities (WHC-SD-W320-FHA-001, *Fire Hazard Analysis for Project W-320 Tank 241-C-106 Waste Retrieval*). The conclusion from this analysis is described in the following paragraphs.

The fire hazards analysis comprehensively assessed the risk from fire at Waste Retrieval Sluicing System facilities to determine (1) the potential for the occurrence of fire is minimized; (2) fire will not cause an onsite or offsite release of radiological and other hazardous materials that will threaten the public health and safety or the environment; (3) requirements that will provide an acceptable degree of life safety to U.S. Department of Energy and contractor personnel are in place and there are no undue hazards to the public from fire and its effects on U.S. Department of Energy facilities; and (4) safety systems will not be damaged by fire. The following discussion summarizes the conclusions from the fire hazards analysis.

There are no fixed fire protection systems protecting the equipment and structures in Tank Farm 241-C. A fire involving a trailer in this area is not likely to be controlled or extinguished without the use of hose streams flowing significant quantities of water. Fire hydrants within the vicinity of Tank 241-C-106 equipment and in accordance with the applicable requirements of DOE 6430.1A, *General Design Criteria*, were installed.

The Safety-Class equipment is designed with redundancy. It has been concluded that an accidental fire will not result in a loss of the capability of the Safety-Class system to accomplish its required safety function.

Accumulation of tumbleweeds and other transient combustibles is likely to occur periodically in and around Waste Retrieval Sluicing System equipment and structures. In keeping with Fluor Daniel Hanford policy to limit combustibles to a level As Low as Reasonably Achievable, there is a procedure to ensure periodic removal of tumbleweeds and other unwanted transient combustibles from TWRS facilities.

DOE 6430.1A, Section 1530.99.0, stipulates that automatic water sprinkler coverage be provided throughout nonreactor nuclear facilities. Automatic sprinkler protection is not expected to prevent or reduce any subsequent loss that may result from a fire in the Process Building. Based on the evaluation of combustibles and processes planned for Waste Retrieval Sluicing System activities, a deviation from the DOE 6430.1A requirement for full automatic water sprinkler protection has been made.

11.4 REFERENCES

DOE 6430.1A, 1989, *General Design Criteria*, U.S. Department of Energy, Washington, D.C.

HNF-SD-WM-BIO-001, 1998, *Tank Waste Remediation System Basis for Interim Operation*, Rev. 1, Fluor Daniel Hanford, Inc., Richland, Washington.

HNF-SD-WM-TSR-006, 1998, *Tank Waste Remediation System Technical Safety Requirements*, Rev. 1, Fluor Daniel Hanford, Inc., Richland, Washington.

WHC-SD-W320-FHA-001, 1995, *Fire Hazard Analysis for Project W-320 Tank 241-C-106 Waste Retrieval*, Rev. 0, Westinghouse Hanford Company, Richland, Washington.

CHAPTER 12.0
PROCEDURES AND TRAINING

This page intentionally left blank.

CHAPTER 12.0
PROCEDURES AND TRAINING

CONTENTS

12.0 PROCEDURES AND TRAINING 12-1
12.1 INTRODUCTION 12-1
12.2 PROJECT IMPLEMENTATION 12-1
12.3 REFERENCES 12-1

This page intentionally left blank.

12.0 PROCEDURES AND TRAINING

12.1 INTRODUCTION

Procedures and training requirements are defined in Section 4.11, "Training and Procedures," in the main text of HNF-SD-WM-BIO-001, *Tank Waste Remediation System Basis for Interim Operation*. Specific requirements for Waste Retrieval Sluicing System operations related to procedures and training above those specified in the main text are noted as follows.

12.2 PROJECT IMPLEMENTATION

Responsibility for training on the new systems prior to commencement of operations is defined in HNF-IP-0842, *TWRS Administration*. Training and procedure development is to be conducted per existing Site and facility requirements. Procedures and training requirements for areas specifically related to Waste Retrieval Sluicing System activities will be developed in accordance with DOE 5480.19, *Conduct of Operations Requirements for DOE Facilities*, and with the results of the accident analysis (Chapter 3.0).

12.3 REFERENCES

DOE 5480.19, 1992, *Conduct of Operations Requirements for DOE Facilities*, Change 1, U.S. Department of Energy, Washington, D.C.

HNF-IP-0842, 1997, *TWRS Administration*, Fluor Daniel Hanford, Inc., Richland, Washington.

HNF-SD-WM-BIO-001, 1998, *Tank Waste Remediation System Basis for Interim Operation*, Rev. 1, Fluor Daniel Hanford, Inc., Richland, Washington.

This page intentionally left blank.

CHAPTER 13.0
HUMAN FACTORS

This page intentionally left blank.

CHAPTER 13.0
HUMAN FACTORS

CONTENTS

13.0 HUMAN FACTORS 13-1
13.1 REQUIREMENTS 13-1
13.2 PROJECT IMPLEMENTATION 13-1
13.3 REFERENCE 13-1

This page intentionally left blank.

13.0 HUMAN FACTORS

13.1 REQUIREMENTS

Human factors requirements are defined in Section 4.18, "Human Factors," in the main text of HNF-SD-WM-BIO-001, *Tank Waste Remediation System Basis for Interim Operation.*

13.2 PROJECT IMPLEMENTATION

The application of human factors is graded on project risk, complexity, and level of involvement of the operator at the facility. With the Tank Waste Remediation System, human factors are considered in the development of procedures and controls; staffing; interface with safety structures, systems, and components; surveillance; maintenance; and safety analyses.

13.3 REFERENCE

HNF-SD-WM-BIO-001, 1998, *Tank Waste Remediation System Basis for Interim Operation*, Rev. 1, Fluor Daniel Hanford, Inc., Richland, Washington.

This page intentionally left blank.

CHAPTER 14.0
QUALITY ASSURANCE

This page intentionally left blank.

CHAPTER 14.0
QUALITY ASSURANCE

CONTENTS

14.0 QUALITY ASSURANCE 14-1
14.1 INTRODUCTION 14-1
14.2 REQUIREMENTS 14-1
14.3 TANK WASTE REMEDIATION SYSTEM QUALITY ASSURANCE PROGRAM AND ORGANIZATION 14-1
14.4 QUALITY IMPROVEMENT 14-2
14.5 DOCUMENTS AND RECORDS 14-2
14.6 QUALITY ASSURANCE PERFORMANCE 14-2
14.6.1 Work Processes 14-2
14.6.2 Design 14-2
14.6.3 Procurement 14-3
14.6.4 Inspection and Testing for Acceptance 14-3
14.6.5 Independent and Management Assessment 14-3
14.6.6 Training and Qualifications 14-3
14.7 REFERENCES 14-4

This page intentionally left blank.

14.0 QUALITY ASSURANCE

14.1 INTRODUCTION

The quality assurance requirements and provisions during the procurement, design, and construction phases of project W-320 are defined in the Tank Waste Remediation System (TWRS) general project plan WHC-SD-WM-QAPP-018, *Tank Waste Projects Quality Assurance Program Plan*, and the project specific quality assurance program plan (QAPP) WHC-SD-W320-QAPP-001, *Project Specific Quality Assurance Plan*.

The quality assurance requirements and provisions for the TWRS operations, including the sluicing of Tank 241-C-106, are outlined in WHC-SP-1131, *Westinghouse Hanford Company Quality Assurance Program and Implementation Plan*, the Project Hanford Management Contract (PHMC)-adopted and the Department of Energy (DOE)-approved document required under the Part 10 Code of Federal Regulations, Section 830.120, "Quality Assurance." Specific operating procedures applicable to the project W-320 sluicing operation are contained in the TWRS Procedures Manual, most current revision.

The details of the quality assurance program for the project and the operation are contained in the above mentioned documents. The following sections of this chapter provide a summary of the quality assurance processes employed during the project and to be employed during the course of the sluicing operation.

14.2 REQUIREMENTS

The controlling requirements for the design and construction phases of the project are those applicable requirements found in DOE Order 6430.1A, *General Design Criteria*. Quality assurance requirements related to the design, procurement, and construction phases of the project are identified in the project specific QAPP. Quality assurance requirements for the operation of 241-C-106 sluicing activities are bounded by the QA requirements contained and referenced in the TWRS Project Procedures Manual.

14.3 TANK WASTE REMEDIATION SYSTEM QUALITY ASSURANCE PROGRAM AND ORGANIZATION

The quality assurance program implementation is outlined in the WHC-SP-1131 document identified earlier. Specific TWRS QA organizational structure and processes are contained in the adopted WHC-CM-6-34[1], *TWRS Quality Management Plan*, and WHC-CM-6-50, *TWRS Quality Assurance*.

[1]Refer to Appendix F, "Site-wide Controlled Manual Cross Reference Table," of the BIO for cross-walk between Site-wide controlled manuals (e.g., WHC-CM-X-XX) superseded by Fluor Daniel Hanford, Inc., FDH Procedures (e.g., HNF-PRO-XXX).

14.4 QUALITY IMPROVEMENT

Safety-Class/approval designators are identified on all procurement documents. The designators provide a key to the level of receipt inspection required to be conducted upon receipt of items. Special inspection plans are written for items requiring special or unique receipt inspections. Processes used during the W-320 project for receipt inspections and the filing and resolution of nonconformance reports are identified in the project specific QAPP.

TWRS operational quality improvement processes are outlined and referenced in the TWRS Project Procedures Manual (CM manuals 6-34 and 6-50). These procedures bound the 241-C-106 sluicing activities by requiring that all activities conducted within the TWRS project adhere to requirements contained within the Manual.

14.5 DOCUMENTS AND RECORDS

Documents and records maintained within the quality system include but are not limited to: certified vendor information, instrument/equipment calibration records, adverse assessment results until they are corrected. Project design media (e.g. certified vendor information) are retained in project files until project completion and then turned over to operations. Operational media (e.g. calibration records) are retained in auditable files until archived. Improvement media (e.g. assessment findings and selected observations) are retained on electronic data bases until corrected or resolved. Specific details of document and record processes are contained in the TWRS Project Procedures Manual.

14.6 QUALITY ASSURANCE PERFORMANCE

14.6.1 Work Processes

The PHMC adopted QA Program and Implementation Plan requires that all work be conducted in accordance with approved policies, procedures, or instructions. TWRS operations work procedures are contained in the Project Procedures Manual. When an activity is needed that is not covered by existing procedures, documents (justification for continued operation [JCO], recovery plan, work plan, procedure, etc.) are prepared and approved prior to conducting the activity. The requirements for producing these activity documents are currently contained in the TWRS Procedures Manual.

14.6.2 Design

One of the initial documents produced following conceptual design is the project specific quality assurance project plan (QAPP). The QAPP defines the quality assurance measures required during the course of project including subsequent design, procurement, and construction. The QAPP specific to

project W-320 is the HNF-SD-W320-QAPP-001 document mentioned earlier in this chapter.

14.6.3 Procurement

Quality assurance requirements for procurements are contained in the project specific quality assurance plan. Vendors/Sellers are evaluated to determine their capability to produce the desired item at the specified level of quality. Also, each procurement item is required to have a "Safety-Class/approval" designator derived from the safety analysis. This designator acts as a key to aid in defining the necessary and sufficient set of quality requirements that is included in the procurement package. Quality clauses and/or specific quality requirements are included in the procurement package to assure that the desired function, form, and fit derived by the analyses is communicated to the Seller. Specific requirements for procurement during the W-320 project are outlined in the project specific QAPP.

14.6.4 Inspection and Testing for Acceptance

Quality control inspections are defined during the procurement phase based on the importance of the item as determined by analyses conducted during the design phase. Inspections can take the form of visual examinations, non-destructive testing, and in limited cases, destructive testing of a small sample of items. Specific inspection requirements are based on the particular item and its application/needed function. The requirements for inspection and testing are outlined in the project specific QAPP.

14.6.5 Independent and Management Assessment

The conduct of assessments during the operational phase within the TWRS project is defined and controlled by requirements outlined and referenced in the TWRS Project Procedures Manual. During the conduct of the project, assessments were conducted in the form of surveillances conducted internal and external to the W-320 project. In both cases, plans for the assessments are required to be developed at the beginning of each year. If a problem is noted or develops during the course of the year, special assessments can be conducted to gain insights and/or information needed by management to effect corrective actions.

14.6.6 Training and Qualifications

Project personnel (craft, engineers, supervisors) undergo performance-based training according to specific qualification and training programs for their respective areas of responsibility. National standards provide the training and qualification requirements for the various crafts. Site and/or facility specific needs (e.g., radiological, toxicological, emergency preparedness, etc. specific to TWRS) are provided on the Hanford reservation through annual training in both general and facility specific areas.

Qualification and training requirements for nuclear operators are outlined in the DOE Order 5480.20A, *Personnel Selection, Qualification, and Training Requirements for DOE Nuclear Facilities*. TWRS operating personnel are trained and qualified in accordance with the applicable requirements contained within this DOE Order.

14.7 REFERENCES

10 CFR 830.120, "Quality Assurance," Code of Federal Regulations.

DOE Order 5480.20A, 1994, *Personnel Selection, Qualification, and Training Requirements for DOE Nuclear Facilities*, U.S. Department of Energy, Washington, D.C.

DOE Order 6430.1A, 1989, *General Design Criteria*, U.S. Department of Energy, Washington, D.C.

WHC-CM-6-34, *TWRS Quality Management Plan*, Westinghouse Hanford Company, Richland, Washington.

WHC-CM-6-50, *TWRS Quality Assurance*, Westinghouse Hanford Company, Richland, Washington.

WHC-SD-W320-QAPP-001, 1996, *Project Specific Quality Assurance Plan*, Rev. 2, Westinghouse Hanford Company, Richland, Washington.

WHC-SD-WM-QAPP-018, 1995, *Tank Waste Projects Quality Assurance Program Plan*, Rev. 2, Westinghouse Hanford Company, Richland, Washington.

WHC-SP-1131, 1996, *Westinghouse Hanford Company Quality Assurance Program and Implementation Plan*, Rev. 1, Westinghouse Hanford Company, Richland, Washington.

CHAPTER 15.0
EMERGENCY PREPAREDNESS PROGRAM

This page intentionally left blank.

CHAPTER 15.0
EMERGENCY PREPAREDNESS PROGRAM

CONTENTS

15.0 EMERGENCY PREPAREDNESS PROGRAM 15-1

This page intentionally left blank.

15.0 EMERGENCY PREPAREDNESS PROGRAM

Emergency preparedness program requirements are fully defined in Section 4.13, "Emergency Preparedness," in the main text of HNF-SD-WM-BIO-001, *Tank Waste Remediation System Basis for Interim Operations*. No additional project-specific requirements related to emergency preparedness are required beyond those identified as appropriate for Waste Retrieval Sluicing System activities in Sections 3.0, 4.0, and 5.0.

This page intentionally left blank.

CHAPTER 16.0
PROVISIONS FOR DECONTAMINATION AND DECOMMISSIONING

This page intentionally left blank.

CHAPTER 16.0
PROVISIONS FOR DECONTAMINATION AND DECOMMISSIONING

CONTENTS

16.0 PROVISIONS FOR DECONTAMINATION AND DECOMMISSIONING 16-1
16.1 INTRODUCTION 16-1
16.2 REQUIREMENTS 16-1
16.3 DESCRIPTION OF CONCEPTUAL PLANS 16-1
16.4 REFERENCES 16-2

This page intentionally left blank.

16.0 PROVISIONS FOR DECONTAMINATION AND DECOMMISSIONING

16.1 INTRODUCTION

This section describes provisions that facilitate the decontamination and decommissioning of facilities associated with Waste Retrieval Sluicing System activities.

16.2 REQUIREMENTS

The Tank Waste Remediation System does not have a formal decontamination and decommissioning plan. The main text of the BIO contains provisions for decontamination and decommissioning. Detailed plans will be prepared as required to support the decontamination and decommissioning of the Waste Retrieval Sluicing System.

DOE 5820.2A, *Radioactive Waste Management*, contains the primary requirements for decontamination and decommissioning activities. The current regulatory basis for decontamination and decommissioning activities is minimal. Some definitions of technical requirements for decontamination and decommissioning are listed in DOE 5400.5, *Radiation Protection of the Public and the Environment*.

16.3 DESCRIPTION OF CONCEPTUAL PLANS

The design of the Waste Retrieval Sluicing System shall facilitate decontamination per HNF-SD-W320-FDC-001, *Functional Design Criteria for Tank 241-C-106 Waste Retrieval, Project W-320*, so the facility can be decommissioned at a future date. Guidance for retrieval equipment design to facilitate eventual decommissioning shall be obtained from ANSI N300-1975, *Design Criteria for Decommissioning of Nuclear Fuel Reprocessing Plants*, and DOE 6430.1A, *General Design Criteria*, Sections 1300-11.2 and 1321-7.

The following principles shall be employed to the extent practicable.

- Modular, separable confinements shall be used for radioactive and other hazardous materials to preclude contamination of fixed portions of the structure.
- Filtration components of the ventilation systems shall be located at or near individual enclosures and as close as practical to the sources of contamination to minimize long runs of internally contaminated ducts.
- Areas subject to contamination shall be designed to facilitate decontamination. Liners and coatings shall be selected to withstand decontaminating agents and radiation degradation throughout the life of the facility. Surfaces should be free of crevices, ledges, and/or protrusions that could collect radioactive material.

- Penetrations shall be designed to minimize technical and construction problems in the structural closing and sealing of these penetrations at the time of decommissioning.
- Penetrations shall be waterproofed for protection during decontamination efforts.
- Fixtures and outlets shall be sealed.
- Drains and similar piping shall have physical provisions for cleaning.
- Piping systems shall be sloped and free of traps except as required for retrieval process isolation.
- Adequate clearance shall be provided for transfer of equipment.
- Lifting lugs shall be used on large tanks or equipment.
- Modular radiation shielding shall be used in lieu of, or in addition to, monolithic shielding walls.

16.4 REFERENCES

ANSI N300-1975, 1975, *Design Criteria for Decommissioning of Nuclear Fuel Reprocessing Plants*, American National Standards Institute, Inc., New York, New York.

DOE 5400.5, 1993, *Radiation Protection of the Public and the Environment*, Change 2, U.S. Department of Energy, Washington, D.C.

DOE 5820.2A, 1988, *Radioactive Waste Management*, U.S. Department of Energy, Washington, D.C.

DOE 6430.1A, 1989, *General Design Criteria*, U.S. Department of Energy, Washington, D.C.

HNF-SD-W320-FDC-001, 1998, *Functional Design Criteria for Tank 241-C-106 Waste Retrieval, Project W-320*, Rev. 5, Numatec Hanford Company, Richland, Washington.

CHAPTER 17.0
MANAGEMENT, ORGANIZATION, AND INSTITUTIONAL SAFETY PROVISIONS

This page intentionally left blank.

CHAPTER 17.0
MANAGEMENT, ORGANIZATION, AND INSTITUTIONAL SAFETY PROVISIONS

CONTENTS

17.0 MANAGEMENT, ORGANIZATION, AND INSTITUTIONAL SAFETY PROVISIONS . . . 17-1
17.1 INTRODUCTION 17-1
17.2 REQUIREMENTS 17-1
17.3 PROJECT IMPLEMENTATION 17-1
17.4 REFERENCES 17-1

This page intentionally left blank.

17.0 MANAGEMENT, ORGANIZATION, AND INSTITUTIONAL SAFETY PROVISIONS

17.1 INTRODUCTION

The Waste Retrieval Sluicing System design and operations will be in accordance with the Tank Waste Remediation System organization structures, policies, and programs that ensure safety is the fundamental principle guiding all Tank Waste Remediation System operations.

17.2 REQUIREMENTS

The requirements for management, organization, and institutional safety provisions are contained in the main text of HNF-SD-WM-BIO-001, *Tank Waste Remediation System Basis for Interim Operation.*

17.3 PROJECT IMPLEMENTATION

There are no project-specific requirements related to management, organization, and institutional safety provisions for the Waste Retrieval Sluicing System activities.

17.4 REFERENCES

HNF-SD-WM-BIO-001, 1998, *Tank Waste Remediation System Basis for Interim Operation*, Rev. 1, Fluor Daniel Hanford, Inc., Richland, Washington.

This page intentionally left blank.

APPENDIX A

HAZARD TOPOGRAPHY

This page intentionally left blank.

APPENDIX A

HAZARD TOPOGRAPHY

LIST OF TABLES

A-1. Applicable Hazard Evaluations for Tank Waste Remediation System Facilities A-1
A-2. Material at Risk Table A-2
A-3. Project W-320 Facility Configurations A-9
A-4. TWRS Tank Unique Phenomena A-10

LIST OF TERMS

ALC	Air lift circulator
COB	cleanout box
HAS	Hazards Assessment
HEPA	high-efficiency particulate air (filter)
MAR	material at risk
N/A	not applicable
NCAW	neutralized current acid waste
NHW	neutralized high-level waste
PHA	preliminary hazards analysis
PNNL	Pacific Northwest National Laboratory
RMW	radioactive mixed waste
SARA	Superfund Amendments and Reauthorization Act
TOC	total organic carbon
TWRS	Tank Waste Remediation System

Table A-1. Applicable Hazard Evaluations for Tank Waste Remediation System Facilities.

Facility Name	Facility Type	Applicable Hazard Evaluation	Hazard Evaluation Identifier
241-AY TANK FARM			
241-AY-102	Double shell tank, air lift circulators, active ventilation	HAS: W-320	W-320
241-C TANK FARM			
241-C-106	Single shell tank, high heat load, active ventilation	HAS: W-320	W-320

HAS = Hazards Assessment (LANL)

Table A-2. Material at Risk Table. (7 sheets)

Field name	MAR-subject	MAR-description	MAR-classification	Capacity	Material type	Physical form	Volume or activity	Transient	Quantity	Comments
241-AY-102	Tank Contents	AY-102	D [D1]	1.16M gal [D3]	Supernate Solid [D2]	Liquid Solid [D2]	694 Kgal 32 Kgal [D2]	No	N/A	N/A
241-AY-102	Tank Headspace	AY-102	N/A	N/A	N/A	Vapor	1572 M3. No NH3 present. [D4] See radionuclides concentrations, Note 1.	No	N/A	N/A
241-AY*	Ventilation Filter Contents	Primary	N/A	N/A	N/A	N/A	N/A	N/A	N/A	N/A
241-AY*	Ventilation Filter Contents	Annulus	N/A	200 mR/hr maximum for all HEPA filters [D3]	N/A	Particulate	200 mR/hr maximum [D3] WHC-SD-WM-EMP-031, Rev 2, summarizes the assay results of HEPA filters for stack 296-A-17.	Yes - disposed in accordance w/WHC-EP-0063-4 (9/93)	N/A	HEPA filters monitored for DP drop/loading in accordance w/manufacturer's specs
241-AY*	Ventilation Filter Contents	Breather	N/A	N/A	N/A	N/A	N/A	N/A	N/A	N/A
241-AY*	Contamination In Ventilation System	De-entrainers	Process condensate	N/A	N/A	Liquid	Residual	N/A	N/A	N/A
241-AY*	Contamination In Ventilation System	Seal loop	Process condensate	N/A	N/A	Liquid	Residual	N/A	N/A	N/A
241-AY*	Contents of Pipeline and/or Source Tank During Transfer	N/A	N/A	N/A	N/A	N/A	N/A	N/A	N/A	Refer to transfer line Table 7

Table A-2. Material at Risk Table. (7 sheets)

Field name	MAR-subject	MAR-description	MAR-classification	Capacity	Material type	Physical form	Volume or activity	Transient	Quantity	Comments
241-AY*	Contents of Sump or Encasement	Encasement: From 101-AY to 102-AY	Residual contamination	1.2 K gal [AY24][1]	N/A	Residue	Unknown	No	N/A	Volume calculations represent available area in pipe encasements.
241-AY*	Contents of Sump or Encasement	Encasement: Between tanks to 241-AX-152 diversion box	Residual contamination	9.9 K gal [AY24,25][1]	N/A	Residue	Unknown	No	N/A	Volume calculations represent available area in pipe encasements.
241-AY-01A	Contamination in Pit or Box	Pump pit 01A	Residual contamination	3.6 K_1gal [AY2][1]	N/A	Residue	Unknown	No	1 pump pit	N/A
241-AY-01F	Contamination in Pit or Box	Annulus pumpout pit 01F	Residual contamination	1.6 K_1gal [AY3][1]	N/A	Residue	Unknown	No	1 pumpout pit	N/A
241-AY-01B-E	Contamination in Pit or Box	Sluice pits 01B,C,D, E	Residual contamination	2.5 K gal ea. [AY6][1]	N/A	Residue	Unknown	No	4 sluice pits	N/A
241-AY*	Contamination in Pit or Box	Leak detection pit	Residual contamination	3.1 K gal [AY17][1]	N/A	Residue	Unknown	No	1 leak det. pit includes: lk det well, lk det pit, rad det well, rad dry well [AY17][1]	N/A
241-AY*	Contamination in Pit or Box	Encasement leak detection pit	Residual contamination	3.1 K gal [AY17][1]	N/A	Residue	Unknown	No	1 enc pit includes: lk det pit, enc drain well, rad det well [AY17][1]	Volume calculations represent available area in pipe encasements.
241-AY*	Contamination in Pit or Box	Encasement on side of tank	Residual contamination	26.7 K_1gal [AY17][1]	N/A	Residue	Unknown	No	1 encasement	Volume calculations represent available area in pipe encasements.

Table A-2. Material at Risk Table. (7 sheets)

Field name	MAR-subject	MAR-description	MAR-classification	Capacity	Material type	Physical form	Volume or activity	Transient	Quantity	Comments
241-AY-02A	Contamination in Pit or Box	Pump pit 02A	Residual contamination	3.6 K gal [AY1]	N/A	Residue	Unknown	No	1 pump pit	N/A
241-AY*	Contamination in Pit or Box	Annulus pumpout pit	Residual contamination	9.6 K gal [AY3]	N/A	Residue	Unknown	No	1 pumpout pit	N/A
241-AY-02B-E	Contamination in Pit or Box	Sluice pits 02B,C,D, E	Residual contamination	2.5 K gal ea. [AY6]	N/A	Residue	Unknown	No	4 sluice pits	N/A
241-AY*	Contamination in Pit or Box	Leak detection pit	Residual contamination	3 K gal [AY12,13]	N/A	Residue	Unknown	No	1 leak det pit includes: lk det well, lk det pit, rad dry well, rad det well [AY12,13]	N/A
241-AY*	Contamination in Pit or Box	Encasement S side of tank	Residual contamination	.3 K gal [AY24]	N/A	Residue	Unknown	No	1 encasement	N/A
241-AY-501	Contamination in Pit or Box	Condensate valve pit AY-501	Residual contamination	4 K gal [AY4]	N/A	Residue	Unknown	No	1 valve pit	N/A
241-AY-151	Contamination in Pit or Box	Pumpout pit AY-151	Residual contamination	1.3 K gal [AY8]	N/A	Residue	Unknown	No	1 pumpout pit	N/A
241-AY-152	Contamination in Pit or Box	Transfer box AY-152	Residual contamination	4.9 K gal [AY9,11]	N/A	Residue	Unknown	No	1 transfer box	N/A
241-AY*	Contamination in Pit or Box	Raw water pits	Residual contamination	2 @ 1.2 K gal ea; 8 @ .2 K gal ea; 1 @ .6 K gal [AY19/1]	N/A	Residue	Unknown	No	11 Raw water pits	N/A
241-AY*	Contamination in Pit or Box	Condensate drain valve pit	Residual contamination	.1 K gal [AY19]	N/A	Residue	Unknown	No	1 cond dr pit	N/A

Table A-2. Material at Risk Table. (7 sheets)

Field name	MAR-subject	MAR-description	MAR-classification	Capacity	Material type	Physical form	Volume or activity	Transient	Quantity	Comments
241-AY-1	Contamination in Pit or Box	Cleanout box AY-1	Residual contamination	.07 K gal [AY23]	N/A	Residue	Unknown	No	1 COB	N/A
241-C-105	Tank Contents	C-105	NCPLX [d1]	530 kgal [d4]	Supernatant [d1] Sludge [d1]	Liquid [d1] Solid [d1]	2 kgal [d1] 132 kgal [d1]	No	N/A	Interim stabilized 10/95 [d9]
241-C-106	Tank Contents	C-106	NCPLX [d1]	530 kgal [d4]	Supernatant [d1] Sludge [d1]	Liquid [d1] Solid [d1]	32 kgal [d1] 197 kgal [d1]	No	N/A	C-106 will be sluiced in the future [i4] Treated cooling water (pH 9-10) is added to tank, about 6000 gallons/month [i1]
241-C-105	Tank Headspace	C-105	N/A	N/A	N/A	vapor	2728 cubic meters [d6] 5.2 g ammonia [d6] See radionuclides concentrations note 1	No	N/A	N/A
241-C-106	Tank Headspace	C-106	N/A	N/A	N/A	vapor	2373 cubic meters [d6] 4.5 g ammonia [d6] See radionuclides concentrations note 1	No	N/A	Tank C-106 will be sluiced in the future; headspace will change [i4]
241-C	Ventilation Filter Contents	Primary - C-105/C-106 Exhaust System	N/A	1 R/hr at six inches** [d10, i5]	N/A	particulate	<100 mR/hr*, 70 mr/hr on top of C-105 inlet filter [rad survey report 221830, 5/2/96]	yes, filters disposed of in accordance with EP-0063-4 (9/93)	N/A	*Not identified by East Tank Farms High/Very High Radiation Area Log as a high rad area (except C-105 inlet filter) [rad survey report 221830, 5/2/96] **SAR for DSTs indicates 200 mR/hr limit on HEPA filters through administrative controls. No reference f

Table A-2. Material at Risk Table. (7 sheets)

Field name	MAR-subject	MAR-description	MAR-classification	Capacity	Material type	Physical form	Volume or activity	Transient	Quantity	Comments
241-C	Ventilation Filter Contents	Annulus Exhaust	N/A	N/A	N/A	N/A	N/A	N/A	N/A	N/A
241-C	Ventilation Filter Contents	Breathers	N/A	1 R/hr at six inches** [d10, i5]	N/A	Particulates	<100 mR/hr*	yes, filters disposed of in accordance with EP-0063-4 (9/93)	N/A	*Not identified by East Tank Farms High/Very High Radiation Area Log as a high rad area [rad survey report 221830, 5/2/96] **SAR for DSTs indicates 200 mR/hr limit on HEPA filters through administrative controls. No reference found that indicates this lim
241-C	Contamination In Ventilation System	De-entrainer	Process condensate	N/A	N/A	liquid	residual	No	N/A	For the C-105/C-106 exhaust system.
241-C	Contamination In Ventilation System	Seal loops	condensate	<1 gal [i6]	N/A	liquid	residual	No	One per tank, except C-105 and C-106	Seal loops on breather filters for all tanks except C-105 and C-106.
241-C	Contents of Pipeline and/or Source Tank During Transfer	N/A	N/A	N/A	N/A	N/A	N/A	N/A	N/A	See transfer line study.
241-C	Contamination in Pit or Box	Inactive pits*	residual contamination [i1]	N/A	N/A	residue	N/A	No	N/A	*All pits except those noted below are isolated and inactive [c11-c29, wd].

Table A-2. Material at Risk Table. (7 sheets)

Field name	MAR-subject	MAR-description	MAR-classification	Capacity	Material type	Physical form	Volume or activity	Transient	Quantity	Comments
241-C	Contamination in Pit or Box	Pump pits*	residual contamination [i1]	10,000 gal (11' x 14'-6" x 8'-8" [c1]	N/A	residue	N/A	No	N/A	*Pump pits not isolated on C-102, C-103, C-105, and C-106. Isolated on Tanks C-104 and C-101. See salt well pump pits for C-107 through C-112.
241-C	Contamination in Pit or Box	Heel pits*	residual contamination [i1]	2000 gal (9' x 6' x 4'-10") [c3]	N/A	residue	N/A	No	N/A	*Isolated on Tanks C-101 and C-104. C-105 is weather covered. Only expected to be used on C-103 (for salt well pumping) and possibly C-106 in the future. [i4]
241-C	Contamination in Pit or Box	Salt well pump pits*	residual contamination [i1]	1000 gal (6' dia x 5' deep) [c4, c5]	N/A	residue	N/A	No	N/A	*Only potentially active (not weather covered) on C-107, 110, and 112 (see heel pits above) C-110 and C-112 not expected to be used. [i4]
241-C	Contamination in Pit or Box	Sluice pit*	residual contamination [i1]	4000 gal (9' x 8'-6" x 7') [c10]	N/A	residue	N/A	No	N/A	*Potentially active on Tank C-106, which will be sluiced. [i4]
241-C	Contamination in Pit or Box	Valve pit 241-C	residual contamination [i1]	5600 gal (10' dia x 9'-6") [c6]	N/A	residue	N/A	No	N/A	May be used in the future for pumping C-103 [i4]
241-C	Contamination in Pit or Box	Raw water service pit	raw water	N/A	N/A	liquid	N/A	No	N/A	Service pit only has raw water in it. No longer in use [i1, i4]

Table A-2. Material at Risk Table. (7 sheets)

Field name	MAR-subject	MAR-description	MAR-classification	Capacity	Material type	Physical form	Volume or activity	Transient	Quantity	Comments
241-C	Contamination in Pit or Box	Diversion boxes	residual contamination [i1][1]	N/A	N/A	residue	N/A	No	N/A	All diversion boxes are isolated and inactive [rb, wd][1]

[1]Note defined in WHC-SD-WM-HIE-007, 1996, Tank Waste Remediation System FSAR Hazard Identification Facility Configuration Verification Report, Rev. 0, Westinghouse Hanford Company, Richland, Washington.

*Refer to comment items in the same data row.

**Refer to comment items in the same data Row.

COB = cleanout box.
HEPA = high-efficiency particulate air (filter).
MAR = material at risk.
N/A = not applicable.
NCAW = neutralized current acid waste.
NHW = neutralized high-level waste.
RMW = radioactive mixed waste.
SARA = Superfund Amendments and Reauthorization Act of 1986.
TWRS = Tank Waste Remediation System.

Table A-3. Project W-320 Facility Configurations.

Facility Name	Type	Ventilation	Comment Ventilation	Air Lift Circulator	Comment ALC	Steam Coils	Comment Steam Coils	Mixer Pumps	Comments Mixer Pumps
241-AY-102	Double shell tank	Active	Tank farm A primary ventilation system	Yes		No	Steam coils in tank, steam to facility is blanked off	No	
241-C-105	Single shell tank	Active	Exhauster	No		No	No steam to C Tank Farm	No	
241-C-106	Single shell tank	Active	Exhauster	No		No	No steam to C Tank Farm	No	

ALC = Air lift circulator

Table A-4. TWRS Tank Unique Phenomena. (2 sheets)

Field Name	Type	Flammable Gas	Ferrocyanide	Organics Separable Phase	TOC in Liquids	TOC in Solids	High Heat	Pyrophorics	Syphoning	Criticality	Corrosivity
				Separable Phase	TOC in liquids (>10 g/L)	TOC in solids >4.5 wt% (dry basis)	Heat generation rate >26,000 BTU				
Legend Boxes->		Does it exist? (yes/no) Provide reference.	Does it exist? (yes/no) Provide reference.	Does it exist? (yes/no) Provide reference.	Does it exist? (yes/no) Provide reference.	Does it exist? (yes/no) Provide reference.	Does it exist? (yes/no) Provide reference.	Does it exist? (yes/no) Provide reference.	Does potential exist? Provide reference.	Does potential exist? Provide reference.	Does potential exist? Provide reference.
AY FARM											
241-AY-102	Double shell tank	GRE - No, OSD-T-151-30 Steady State - Yes, HNF-SD-WM-BIO-001, Rev. 1, Appendix E	No, Meacham, 1996, WHC-SD-WM-SARR-038, Rev 1.	Yes, PNNL Letter, from Huckaby to Meacham OT: 073096.	No, SAIC, 1996, WHC-SD-WM-HIE-007, Rev. 0	No, SAIC, 1996, WHC-SD-WM-HIE-007, Rev. 0	Yes, Brevick, 1995, WHC-SD-ER-350, Rev. 0	No, SAIC, 1996, WHC-SD-WM-HIE-007, Rev. 0	No, Syphoning PHA, 1996, WHC-SD-WM-TI-759, Rev. 0	No, Bratzel 1996, WHC-SD-WM-TI-725	No, SAIC, 1996, WHC-SD-WM-HIE-007, Rev. 0

Table A-4. TWRS Tank Unique Phenomena. (2 sheets)

Field Name	Type	Flammable Gas	Ferrocyanide	Organics Separable Phase	TOC in Liquids	TOC in Solids	High Heat	Pyrophorics	Syphoning	Criticality	Corrosivity
C FARM											
241-C-105	Single shell tank	GRE - No, OSD-T-151-30 Steady State - Yes, HNF-SD-WM-BIO-001, Rev. 1, Appendix E	No, Meacham, 1996, WHC-SD-WM-SARR-038, Rev 1.	Yes, PNNL Letter, from Huckaby to Meacham OT: 073096.	No, SAIC, 1996, WHC-SD-WM-HIE-007, Rev. 0	No, Webb, 1996, WHC-SD-WM-SARR-033, Rev 1	No, Kummerer, 1995, WHC-SD-WM-SARR-010, Rev 1.	No, SAIC, 1996, WHC-SD-WM-HIE-007, Rev. 0	No, Syphoning PHA, 1996, WHC-SD-WM-TI-759, Rev. 0	No, Bratzel 1996, WHC-SD-WM-TI-725	Yes, Anantatmula 1994, WHC-EP-0772
241-C-106	Single shell tank	GRE - No, OSD-T-151-30 Steady State - Yes, HNF-SD-WM-BIO-001, Rev. 1, Appendix E	No, Meacham, 1996, WHC-SD-WM-SARR-038, Rev 1.	Yes, PNNL Letter, from Huckaby to Meacham OT: 073096.	No, SAIC, 1996, WHC-SD-WM-HIE-007, Rev. 0	No, Webb, 1996, WHC-SD-WM-SARR-033, Rev 1	Yes, Kummerer, 1995, WHC-SD-WM-SARR-010, Rev 1.	No, SAIC, 1996, WHC-SD-WM-HIE-007, Rev. 0	No, Syphoning PHA, 1996, WHC-SD-WM-TI-759, Rev. 0	No, Bratzel 1996, WHC-SD-WM-TI-725	Yes, Anantatmula 1994, WHC-EP-0772

HNF-SD-WM-BIO-001, 1998, Tank Waste Remediation System Basis for Interim Operation, Rev. 1, Fluor Daniel Hanford, Inc., Richland, Washington.

Huckaby, J. L., 1996, Technical Basis for Orgscm Spreadsheet (PNNL Letter OT:073096 to J. E. Meacham, Westinghouse Hanford Company, July 30), Pacific Northwest National Laboratory, Richland, Washington.

WHC, 1996, Operating Specifications For Watch List Tanks, Rev. B-23, OSD-T-151-30, Westinghouse Hanford Company, Richland, Washington.

WHC-EP-0772, 1994, Characterization of the Corrosion Behavior of the Carbon Steel Liner in Hanford Site Single Shell Tanks, Westinghouse Hanford Company, Richland, Washington.

WHC-SD-WM-ER-350, 1995, Historical Tank Content Estimate for the Southeast Quadrant of the Hanford 200 Areas, Rev. 0, Westinghouse Hanford Company, Richland, Washington.

WHC-SD-WM-HIE-007, 1996, Tank Waste Remediation System FSAR Hazards Identification/Facility Configuration Verification Report, Rev. 0, Westinghouse Hanford Company, Richland, Washington.

WHC-SD-WM-SARR-010, 1995, Heat Removal Characteristics of Waste Storage Tanks, Rev. 1, Westinghouse Hanford Company, Richland, Washington.

WHC-SD-WM-SARR-015, 1996, Topical Report on Steady-State Flammable Gas Generation in Waste Tanks, Rev. 0, Westinghouse Hanford Company, Richland, Washington.

WHC-SD-WM-SARR-033, 1995, Preliminary Safety Criteria for Organic Watch List Tanks at the Hanford Site, Rev. 1, Westinghouse Hanford Company, Richland, Washington.

WHC-SD-WM-SARR-038, 1996, Assessment of the Potential for Ferrocyanide Propagating Reaction Accidents, Rev. 1, Westinghouse Hanford Company, Richland, Washington.

WHC-SD-WM-TI-725, 1996, Tank Farm Nuclear Criticality Review, Rev. 0, Westinghouse Hanford Company, Richland, Washington.

WHC-SD-WM-TI-759, 1996, Hazard Evaluations for Tank Waste Remediation System Final Safety Analysis Report, Rev. 0, Westinghouse Hanford Company, Richland, Washington.

N/A = Not Applicable.
PHA = preliminary hazards analysis.
PNNL = Pacific Northwest National Laboratory.
TOC = total organic carbon.

This page intentionally left blank.

APPENDIX B

REPRESENTATIVE/ANALYZED ACCIDENTS

This page intentionally left blank.

APPENDIX B

REPRESENTATIVE/ANALYZED ACCIDENTS

LIST OF TABLES

B-1 Representative Hazards of Analyzed Accidents B-1
B-2 Representative Hazards of Analyzed Accidents and the Represented Hazardous Conditions B-5

LIST OF TERMS

CPS	criticality prevention specification
HEPA	high-efficiency particulate air (filter)
NC	no controls
RP	radiation protection
SST	single-shell tank
TRU	transuranic

Table B-1. Representative Hazards of Analyzed Accidents. (4 sheets)

Bin	ID	Material at Risk	Hazardous Condition	Cause	Initial Freq NC	Initial Safety Cons NC	Cause Grp	Rep Acc
ACCIDENT NUMBER 1 - Nuclear Criticality: WRSS Specific Analysis								
RP	W320-BCD-TRANS01	Tank 241-C-106 Plutonium Inventory	Release of ionizing radiation and radioactive gas from Tank 241-C-106 due to a criticality event in the tank pump vortices	1. Natural occurrence if conditions are met	F1	S2	A04	01
ACCIDENT NUMBER 2 - HEPA Filter Failure: WRSS Specific Analysis								
B-1-a	W320-D-ALL01	Tank Dome Space Inventory and Filter Burden	Release of low energy radioactive aerosol through failed filters from Tank 241-AY-102 due to a steam bump	1. Human error 2. Communications error with other workers using the tank 3. IOSRs require activation of ALCs in event temperature above limit	F3	S2	D14	02
ACCIDENT NUMBER 3 - Unfiltered Release: WRSS Specific Analysis								
C-1-a	W320-D-VENT07	Tank Dome Space Inventory	Release of low energy radioactive aerosol from Tank 241-C-105/ Tank 241-C-106 ventilation system due to failure to determine ventilation leak during sluicing.	1. Ducting corrosion 2. Seal deterioration	F3	S2	D14	03
ACCIDENT NUMBER 4 - Fire in Contaminated Area: BIO Analysis Bounding								
A-1-a	W320-ABCD-TRANS11	Tank Inventory	Release of energetic radioactive aerosol release from line break due to flammable gas ignition in pit with cover block falling onto piping.	1. Chimney through deep drop legs 2. 6 in. high capacity drain to dome space 3. Pit sealed to minimize inleakage	F2	S3	B08	04
ACCIDENT NUMBER 5 - Caustic Spray Leak: BIO Analysis Bounding								
	Covered by the analysis in Section 3.4.2.5 which will be incorporated into the main text of the TWRS BIO in a future revision							05
ACCIDENT NUMBER 6 - Tank Failure - Due to Excessive Loads: WRSS Specific Analysis								
A-1-a	W320-ABCD-ALL01	Tank Inventory	Release of energetic radioactive aerosol from damaged tank due to flooding on top of Tank 241-C-106 dome	1. Raw water line rupture 2. Heavy rainfall	F1	S3	C19	06A
A-1-a	W320-ABCD-ALL02	Tank Inventory	Release of energetic radioactive aerosol from damaged tank due to flooding on top of Tank 241-AY-102 dome	1. Raw water line rupture 2. Heavy rainfall	F1	S3	C19	06B

Table B-1. Representative Hazards of Analyzed Accidents. (4 sheets)

Bin	ID	Material at Risk	Hazardous Condition	Cause	Initial Freq NC	Initial Safety Cons NC	Cause Grp	Rep Acc
ACCIDENT NUMBER 7 - Tank Failure - Due to Excessive Vacuum: WRSS Specific Analysis, bounded by 6, above								
B-1-a	W320-BCD-ALL03	Tank Inventory	Release of energetic radioactive aerosol from damaged Tank 241-C-106 due to excessive vacuum resulting from ventilation system fan over speed and failure of tank loop seal failure.	1. Rotameter valve to controller fault 2. Operator error in adjusting rotameter or inadvertent adjustment	F1	S3	C11	07A
A-1-a	W320-BCD-ALL02	Tank Inventory	Release of energetic radioactive aerosol from collapsed Tank 241-AY-102 due to excessive vacuum resulting from W030 ventilation system inlet damper closing and failure of PCV fails to relieve vacuum.	1. Rotameter valve to controller fault 2. Operator error in adjusting rotameter or inadvertent adjustment	F0	S3	C11	07B
ACCIDENT NUMBER 8 - Flammable Gas Deflagrations - DST/SST: BIO analysis adopted (qualitatively)								
A-1-a	W320-D-ALL07	Tank Inventory	Release of energetic radioactive aerosol from damaged double shell Tank 241-AY-102 due to seismic event which releases flammable gas from the waste and after shocks cause mechanical sparks which ignites the flammable gas mixture.	1. Natural Phenomena	F2	S3	B18	08A
A-1-a	W320-BCD-PUMP04	Tank 241-AY-102 Inventory	Release of energetic radioactive aerosol to atmosphere due to submersible pump being raised too high in Tank 241-AY-102, winch lifting strap breaking, pump falling into waste resulting in a flammable gas release which is ignited by broken electrical cables.	1. Operator error in positioning direction 2. Inadvertent or accidental actuation 3. Winch controller fault	F0	S3	B08	08B
A-1-a	W320-A-TRANS05	Tank 241-C-106 inventory	Release of energetic radioactive aerosol to atmosphere due to temperature out of specification resulting in steam bump when Tank 241-C-106 level is lowered which induces a release of a flammable gas plume and then is ignited.	1. Operator mistake 2. Temperature measurement fault	F0	S3	B08	08C

Table B-1. Representative Hazards of Analyzed Accidents. (4 sheets)

Bin	ID	Material at Risk	Hazardous Condition	Cause	Initial Freq NC	Initial Safety Cons NC	Cause Grp	Rep Acc
ACCIDENT NUMBER 9 - Organic Solvent Fire: WRSS Specific Analysis, different organic solvent than BIO								
A-1-a	W320-B-ALL09	Tank Inventory and Filter Burden	Release of energetic radioactive aerosol from damaged tank due to formation of organic layer in Tank 241-AY-102 during slurry distribution and subsequent ignition of organics.	1. Sluicing causes organic separation	F1	S3	B04	09A
A-1-a	W320-B-ALL10	Tank Inventory and Filter Burden	Release of energetic radioactive aerosol from damaged tank due to formation of organic layer in Tank 241-C-106 during sluicing and subsequent ignition of organics.	1. Sluicing causes organic separation	F1	S3	B04	09B
ACCIDENT NUMBER 10 - In-Tank Fuel Fire/Deflagration: Consequences bounded by accident 9 above								
A-1-a	W320-D-CHILL01	Tank Inventory and Filter Burden	Release of energetic radioactive aerosol from damaged tank due to a leak and ignition of propylene glycol from pit chiller into Tank 241-C-106.	1. Piping or tubing leak	F0	S3	B12	10
ACCIDENT NUMBER 11 - Steam Bump: WRSS Specific Analysis								
C-1-a	W320-D-TRANS08	Tank Dome Space Inventory and Filter Burden	Release of low energy radioactive aerosol through failed filters due to excessive fluffing of waste in Tank 241-AY-102 resulting in large steam bump and unfiltered release.	1. Inadequate prediction of waste behavior	F1	S2	D01	11
ACCIDENT NUMBER 12 - Steam Explosion between Steel Liner and Concrete Shell: WRSS Specific Analysis								
B-1-a	W320-ABCD-TRANS01	Tank Inventory	Release of liquid waste due to sluicer nozzle jet being directed at and breaching Tank 241-C-106 wall resulting in water leaking into liner gap where steam vapor forms and breaches tank bottom.	1. Unavoidable operator action	F3	S2	D04	12
ACCIDENT NUMBER 13 - Subsurface Leak Remaining Subsurface: WRSS Specific Analysis								
C-3-b	W320-B-TRANS19	Transfer Line Inventory	Release of radioactive liquid from breached transfer line due to a leak from primary transfer line and a defective secondary line resulting in an underground spill.	1. Line corrosion 2. ground movement 3. Aging	F1	S0	D12	13

Table B-1. Representative Hazards of Analyzed Accidents. (4 sheets)

Bin	ID	Material at Risk	Hazardous Condition	Cause	Initial Freq NC	Initial Safety Cons NC	Cause Grp	Rep Acc
ACCIDENT NUMBER 14 - Subsurface Leak Resulting in Pool: WRSS Specific Analysis								
C-2-b	W320-B-TRANS22	Tank 241-AY-102 inventory	Release of radioactive liquid from transfer line due to local flooding during transfer which results in line being uncovered and breached.	1. Raw water leak 2. Natural flow	F3	S2	D19	14
ACCIDENT NUMBER 15 - Surface Leak Resulting in Pool: WRSS Specific Analysis								
C-2-b	W320-B-FLUSH06	Flushing water in Tank 241-AY-102 Pit	Release of radioactive liquid from transfer line due to a pipe break in Tank 241-AY-102 pit with the high capacity drain cover on resulting in overflow of pit onto the ground.	1. Equipment failure 2. Maintenance or assembly error	F2	S2	D12	15A
C-2-b	W320-BCD-TRANS10	Tank 241-AY-102 inventory	Release of radioactive liquid release from sluice transfer line due to the blank flange being left off flushing connection in Tank 241-AY-102 pit and drain cover left on resulting in overflow of pit onto the ground during sluicing.	1. Maintenance error 2. Communications error between different groups using the pit	F2	S2	E06	15B
ACCIDENT NUMBER 16 - Spray Leak in Structure or from Overground Waste Transfer: WRSS Specific Analysis								
A-1-a	W320-BCD-TRANS11	Transfer Line Inventory	Release of energetic radioactive aerosol from transfer line due to blank flange left off flushing connection in Tank 241-C-106 pit after flushing. Cover plug is lifted out of cover block on initiation of sluicing process.	1. Maintenance error 2. Communications error between different groups using the pit	F3	S3	E06	16A
A-1-a	W320-BCD-TRANS12	Transfer Line Inventory	Release of energetic radioactive aerosol from transfer line due to blank flange left off flushing connection in Tank 241-AY-102 pit after flushing. Cover plug is lifted out of cover block on initiation of sluicing process.	1. Maintenance error 2. Communications error between different groups using the pit	F3	S3	E06	16B
ACCIDENT NUMBER 17 - Spray Leak from Underground Waste Transfer Line: WRSS Specific Analysis								
B-1-a	W320-D-TRANS11	Transfer Line Inventory	Release of large high energy aerosolized radioactive waste to the atmosphere from a spray leak from transfer line due to seismic event.	1. Natural Phenomena	F1	S3	D18	17

CPS = criticality prevention specifications.
DST = double-shell tank.
HEPA = high-efficiency particulate air.
SST = single-shell tank.

Table B-2. Representative Hazards of Analyzed Accidents and the Represented Hazardous Conditions. (24 sheets)

BIN	ID	Material at Risk	Hazardous Condition	Cause	Initial Freq NC	Initial Safety Cons NC	Cause Grp	Rep Acc
HAZARDOUS CONDITION OF ANALYZED ACCIDENT: 1 - Nuclear Criticality								
RP	W320-BCD-TRANS 01	Tank 241-C-106 Plutonium Inventory	Release of ionizing radiation and radioactive gas from Tank 241-C-106 due to a criticality event in the tank pump vortices	1. Natural occurrence if conditions are met	F1	S2	A04	01
HAZARDOUS CONDITIONS								
RP	W320-BCD-TRANS 04	Tank 241-C-106 Plutonium Inventory	Release of ionizing radiation and radioactive gas from Tank 241-C-106 due to a criticality event in the tank during sluicing	1. Natural occurrence if conditions are met	F1	S2	A04	01X
RP	W320-D-TERM01	Tank 241-C-106 and Tank 241-AY-102 Plutonium Inventory	Release of ionizing radiation and radioactive gas from Tank 241-AY-102 due to a criticality event in the tank	1. Natural occurrence if conditions are met	F1	S2	A04	01X
RP	W320-BCD-TRANS 02	Tank 241-C-106 Plutonium Inventory	Release of ionizing radiation and radioactive gas from Tank 241-C-106 due to a criticality event in the tank	1. Flushing valve misposition 2. Pump controller fault 3. Excessive solids in slurry flow	F0	S2	A04	01X
RP	W320-BCD-TRANS 03	Tank 241-C-106 Plutonium Inventory	Release of ionizing radiation and radioactive gas from Tank 241-C-106 due to a criticality event in the tank	1. Primary failure of distributor 2. Severe water hammer 3. Severe thermal shock 4. Corrosion 5. Metal fatigue from vibration	F0	S2	A04	01X
HAZARDOUS CONDITION OF ANALYZED ACCIDENT: 2 - HEPA Filter Failure								
B-1-a	W320-D-ALL01	Tank Dome Space Inventory and Filter Burden	Release of low energy radioactive aerosol through failed filters from Tank 241-AY-102 due to a steam bump	1. Human error 2. Communications error with other workers using the tank 3. IOSRs require activation of ALCs in event temperature above limit	F3	S2	D14	02
HAZARDOUS CONDITIONS								
C-1-a	W320-ALL-TRANS 01	Duct and Filter Burden	Release of low energy radioactive aerosol through failed filters from Tank 241-AY-102 due to moisture buildup on ventilation system HEPA filters	1. Natural occurrence under proper conditions	F2	S2	D14	02X
C-1-a	W320-D-TRANS02	Tank Dome Space Inventory	Release of low energy radioactive aerosol from largely intact Tank 241-C-106 due to excessive sluicer flow which results in radioactive air release through HEPAs.	1. Natural outcome if conditions are met	F2	S2	D04	02X
C-1-a	W320-D-VENT04	Tank Dome Space Inventory	Release of small low energy radioactive aerosol through failed filters from Tank 241-AY-102 due to cold water spray into tank, tank vacuum and resulting tank bump	1. Possible result of slurry distribution	F1	S2	D11	02X

Table B-2. Representative Hazards of Analyzed Accidents and the Represented Hazardous Conditions. (24 sheets)

BIN	ID	Material at Risk	Hazardous Condition	Cause	Initial Freq NC	Initial Safety Cons NC	Cause Grp	Rep Acc
A-1-a	W320-B-FLUSH01	Tank Inventory	Release of energetic radioactive aerosol from damaged Tank 241-C-106 single shell tank due to ignition of flammable gas plume and resulting filter breach induced by large water intrusion into tank.	1. Maintenance error 2. Communications error between different groups using the pit	F0	S2	D07	02X
B-1-a	W320-B-FLUSH02	Tank Dome Space Inventory and Filter Burden	Release of low energy radioactive aerosol through failed filters due to a large steam bump in Tank 241-C-106 as a result of high tank vacuum resulting from flushing water spray condensing dome vapors.	1. Planned	F0	S2	D07	02X
C-1-a	W320-B-FLUSH03	Tank Dome Space Inventory and Filter Burden	Release of low energy radioactive aerosol through failed filters of Tank 241-AY-102 due to a large steam bump as a result of high tank vacuum due to high condensation rate in tank from flushing water spray through antisiphon holes.	1. Planned	F0	S2	D07	02X
B-1-a	W320-B-TRANS01	Tank 241-AY-102 inventory	Release of small low energy aerosolized waste from the annulus of Tank 241-AY-102 due to steam pulses from boiling waste in annulus region which results in the failure of annulus filters. Waste leaks into annulus due to corrosion of primary tank from new waste composition.	1. Inadequate prediction of waste behavior	F0	S2	D16	02X
HAZARDOUS CONDITION OF ANALYZED ACCIDENT: 3 - Unfiltered Release								
C-1-a	W320-D-VENT07	Tank Dome Space Inventory	Release of low energy radioactive aerosol from Tank 241-C-105/Tank 241-C-106 ventilation system due to failure to determine ventilation leak during sluicing.	1. Ducting corrosion 2. Seal deterioration	F3	S2	D14	03
HAZARDOUS CONDITIONS								
C-1-a	W320-D-VENT08	Tank Dome Space Inventory	Release of low energy radioactive aerosol from largely intact tank due to excessive vacuum in Tank 241-C-106 from new ventilation system which results in loop seal failure and unfiltered release.	1. Operator error 2. Communications error	F3	S2	D11	03X
C-1-a	W320-D-VENT11	Tank Dome Space Inventory	Release of low energy radioactive aerosol from largely intact tank due to excessive vacuum in Tank 241-C-106 from current ventilation system which results in loop seal failure and unfiltered release.	1. Operator error 2. Communications error	F3	S2	D11	03X

Table B-2. Representative Hazards of Analyzed Accidents and the Represented Hazardous Conditions. (24 sheets)

BIN	ID	Material at Risk	Hazardous Condition	Cause	Initial Freq NC	Initial Safety Cons NC	Cause Grp	Rep Acc
C-1-a	W320-ABCD-CHIL LO1	Tank Dome Space Inventory	Release of low energy radioactive aerosol from largely intact tank due to excessive cooling from process chiller and vacuum in Tank 241-C-106 from ventilation system which results in exceedance of loop seal vacuum and unfiltered release.	1. Chiller control fault 2. High humidity	F2	S2	D11	03X
C-1-a	W320-B-TRANS06	Tank Dome Space Inventory	Release of low energy radioactive aerosol from largely intact Tank 241-AY-102 due to excessive slurry flow resulting in increased aerosol generation and errant flow release.	1. 3-way ball valve in flushing system not fully open 2. Pump controller fault	F2	S2	D15	03X
C-1-a	W320-B-TRANS07	Tank Dome Space Inventory	Release of low energy radioactive aerosol from largely intact Tank 241-AY-102 due to startup of slurry flow to distributor resulting in air being bubbled through waste and release of vapor.	1. Normal procedure	F2	S2	D04	03X
C-1-a	W320-B-TRANS11	Tank Dome Space Inventory	Release of low energy radioactive aerosol from largely intact Tank 241-AY-102 due to excessive corrosion and heat loading from new waste.	1. Inadequate prediction of waste behavior	F2	S2	D16	03X
C-1-a	W320-B-TRANS12	Tank Dome Space Inventory	Release of low energy radioactive aerosol from interconnected tanks due to increased heat loading of Tank 241-AY-102 and loss of vacuum.	1. Inadequate prediction of waste behavior 2. Existing system cannot control flow rates from different tanks. Depends on inleakage 3. W030 system has lower exhaust capabilities	F2	S2	D01	03X
C-1-a	W320-D-TRANS04	Tank Dome Space Inventory	Release of low energy radioactive aerosol from largely intact Tank 241-C-106 due to high temperature sluice water which increases head space pressure with increased errant flow.	1. High temperature in Tank 241-AY-102	F2	S2	D04	03X
C-1-a	W320-B-TRANS08	Tank Dome Space Inventory	Release of low energy radioactive aerosol from largely intact Tank 241-AY-102 due to distributor breaking off which results in excessive aerosol generated in head space and release through HEPAs.	1. Primary failure of distributor 2. Severe Water hammer 3. Severe thermal shock 4. Corrosion 5. Metal fatigue from vibration	F1	S2	D15	03X
C-1-a	W320-B-TRANS10	Tank Dome Space Inventory	Release of low energy radioactive aerosol from largely intact Tank 241-AY-102 due to distributor breaking off which results in excessive aerosol generated in head space and release through HEPAs.	1. Primary failure of sluicer 2. Severe Water hammer 3. Severe thermal shock 4. Corrosion 5. Metal fatigue from vibration	F1	S2	D04	03X

Table B-2. Representative Hazards of Analyzed Accidents and the Represented Hazardous Conditions. (24 sheets)

BIN	ID	Material at Risk	Hazardous Condition	Cause	Initial Freq NC	Initial Safety Cons NC	Cause Grp	Rep Acc
A-1-a	W320-E-TERM01	Tank Inventory	Release of large high energy radioactive aerosol from Tank 241-AY-102 due to excessive fluffing of waste which results in tank structural damage and unfiltered release.	1. Inadequate prediction of waste behavior	F1	S2	D01	03X
C-1-a	W320-D-PURGE01	Tank Dome Space Inventory	Release of low energy aerosolized waste from largely intact Tank 241-C-106 due to nitrogen line break and loss of vacuum.	1. Tube failure 2. Improper Assembly 3. Regulator fault	F0	S2	D12	03X
HAZARDOUS CONDITION OF ANALYZED ACCIDENT: 4 - Fire in Contaminated Area								
A-1-a	W320-ABCD-TRANS11	Tank Inventory	Release of energetic radioactive aerosol release from line break due to flammable gas ignition in pit with cover block falling onto piping.	1. Chimney through deep drop legs 2. 6 in. high capacity drain to dome space 3. Pit sealed to minimize inleakage	F2	S3	B08	04
HAZARDOUS CONDITIONS								
A-1-a	W320-ABCD-CHILL02	Pit radionuclide inventory	Release of energetic radioactive aerosol from covered pit or dead end pipe due to propylene glycol spray leak into ventilation system of Tank 241-C-106 with ignition propagating into tank dome.	1. Piping or tubing leak	F1	S2	B12	04X
A-1-a	W320-BCD-ALL01	Pit radionuclide inventory	Release of energetic radioactive aerosol from covered pit on Tank 241-C-106 due to propylene glycol leak into pit with ignition.	1. Piping or tubing leak	F1	S2	B12	04X
HAZARDOUS CONDITION OF ANALYZED ACCIDENT: 5 - Caustic Spray Leak								
COVERED BY THE ANALYSIS IN SECTION 3.4.2.5 WHICH WILL BE INCORPORATED INTO THE MAIN TEXT OF THE TWRS BIO IN A FUTURE REVISION								
HAZARDOUS CONDITION OF ANALYZED ACCIDENT: 6 - Tank Failure - Due to Excessive Loads								
A-1-a	W320-ABCD-ALL01	Tank Inventory	Release of energetic radioactive aerosol from damaged tank due to flooding on top of Tank 241-C-106 dome	1. Raw water line rupture 2. Heavy rainfall	F1	S3	C19	06A
A-1-a	W320-ABCD-ALL02	Tank Inventory	Release of energetic radioactive aerosol from damaged tank due to flooding on top of Tank 241-AY-102 dome	1. Raw water line rupture 2. Heavy rainfall	F1	S3	C19	06B
HAZARDOUS CONDITIONS								
A-1-a	W320-ABCD-ALL03	Tank Inventory	Release of energetic radioactive aerosol from tank dome collapse due to flooding on top of tank dome	1. Raw water line rupture 2. Heavy rainfall	F0	S3	C19	06X
A-1-a	W320-B-ALL01	Tank Inventory	Release of a large amount of high energy aerosolized waste from Tank 241-C-106 dome collapse due to volcanic ashfall.	1. Natural phenomena	F0	S3	C18	06X

Table B-2. Representative Hazards of Analyzed Accidents and the Represented Hazardous Conditions. (24 sheets)

BIN	ID	Material at Risk	Hazardous Condition	Cause	Initial Freq NC	Initial Safety Cons NC	Cause Grp	Rep Acc
A-1-a	W320-B-ALL02	Tank Inventory	Release of a large amount of high energy aerosolized waste from Tank 241-AY-102 dome collapse due to volcanic ashfall.	1. Natural phenomena	F0	S3	C18	06X
A-1-a	W320-B-ALL03	Tank Inventory	Release of high energy aerosolized waste to the atmosphere from Tank 241-C-106 dome collapse due to extreme snow fall.	1. Natural phenomena	F0	S3	C10	06X
A-1-a	W320-B-ALL04	Tank Inventory	Release of large amount of high energy aerosolized waste from Tank 241-AY-102 dome collapse due to extreme snow fall.	1. Natural phenomena	F0	S3	C10	06X
A-1-a	W320-B-ALL05	Tank Inventory	Release of energetic radioactive aerosol from Tank 241-C-106 dome collapse due to dome being overloaded.	1. Maintenance error 2. Procedure violation	F0	S3	C11	06X
A-1-a	W320-B-ALL06	Tank Inventory	Release of energetic radioactive aerosol from Tank 241-AY-102 dome collapse due to dome being overloaded.	1. Maintenance error 2. Procedure violation	F0	S3	C11	06X
C-1-a	W320-D-TRANS03	Tank Dome Space Inventory	Release of low energy radioactive aerosol from largely intact Tank 241-C-106 due to sluicer moving debris impacting drop leg in tank which breaches dome.	1. Expected outcome of high velocity sluicing Many objects are in the waste	F2	S2	D04	06X
HAZARDOUS CONDITION OF ANALYZED ACCIDENT: 7 - Tank Failure - Due to Excessive Vacuum								
B-1-a	W320-BCD-ALL03	Tank Inventory	Release of energetic radioactive aerosol from damaged Tank 241-C-106 due to excessive vacuum resulting from ventilation system fan over speed and failure of tank loop seal failure.	1. Rotameter valve to controller fault 2. Operator error in adjusting rotameter or inadvertent adjustment	F1	S3	C11	07A
A-1-a	W320-BCD-ALL02	Tank Inventory	Release of energetic radioactive aerosol from collapsed Tank 241-AY-102 due to excessive vacuum resulting from W030 ventilation system inlet damper closing and failure of PCV fails to relieve vacuum.	1. Rotameter valve to controller fault 2. Operator error in adjusting rotameter or inadvertent adjustment	F0	S3	C11	07B
HAZARDOUS CONDITIONS								
A-1-a	W320-ABCD-CHILL03	Tank Inventory	Release of energetic radioactive aerosol from collapsed Tank 241-C-106 due to excessive cooling from process chiller which restricts inflow and loop seal fails to operate.	1. Chiller control fault 2. High humidity	F1	S3	D11	07X
C-1-a	W320-B-FLUSH04	Tank Dome Space Inventory	Release of low energy radioactive aerosol from breached Tank 241-C-106 due to flushing water spray through sluice nozzle resulting in excessive tank vacuum.	1. Planned	F1	S3	D11	07X

Table B-2. Representative Hazards of Analyzed Accidents and the Represented Hazardous Conditions. (24 sheets)

BIN	ID	Material at Risk	Hazardous Condition	Cause	Initial Freq NC	Initial Safety Cons NC	Cause Grp	Rep Acc
A-1-a	W320-D-VENT12	Tank Inventory	Release of energetic radioactive aerosol from collapsed Tank 241-C-106 due to incorrect alignment of current ventilation system through sluice nozzle resulting in excessive tank vacuum with loop seal failure.	1. Operator error 2. Communications error	F1	S3	C11	07X
A-1-a	W320-D-VENT20	Tank Inventory	Release of energetic radioactive aerosol from collapsed Tank 241-C-106 due to incorrect alignment of new ventilation system through sluice nozzle resulting in excessive tank vacuum with loop seal failure.	1. Operator error 2. Communications error	F1	S3	C11	07X
C-1-a	W320-B-VENT03	Tank Dome Space Inventory	Release of low energy radioactive aerosol from breached Tank 241-AY-102 due to ice storm which prevents air inflow through W030 ventilation upgrade and results in excessive vacuum.	1. Natural phenomena	F2	S2	D20	07X
C-1-a	W320-B-VENT04	Tank Dome Space Inventory	Release of low energy radioactive aerosol from breached Tank 241-AY-102 due to ice storm which prevents air inflow through existing exhaust system with W030 intake and results in excessive vacuum.	1. Natural phenomena	F2	S2	D24	07X
C-1-a	W320-B-VENT06	Tank Dome Space Inventory	Release of low energy radioactive aerosol from breached Tank 241-AY-102 due to ice storm which prevents air inflow through existing ventilation system and results in excessive vacuum.	1. Natural phenomena	F2	S2	D11	07X
C-1-a	W320-B-VENT07	Tank Dome Space Inventory	Release of low energy radioactive aerosol from largely intact tank due to volcanic ashfall preventing air inflow into Tank 241-AY-102 through existing ventilation system resulting in tank breach.	1. Natural phenomena	F1	S2	D18	07X
C-1-a	W320-BCD-ALL04	Tank Dome Space Inventory	Release of low energy radioactive aerosol from largely intact Tank 241-C-106 due to fan controller failure resulting in excessive vacuum in tank and loop seal actuation.	1. Rotameter valve to controller fault 2. Operator error in adjusting rotameter or inadvertent adjustment	F1	S2	D11	07X
C-1-a	W320-B-FLUSH05	Tank Dome Space Inventory	Release of low energy radioactive aerosol from largely intact Tank 241-AY-102 due to flushing water spray through antisiphon holes resulting in excessive vacuum in tank and tank breach.	1. Planned	F0	S2	D11	07X
C-1-a	W320-B-VENT01	Tank Dome Space Inventory	Release of low energy radioactive aerosol from largely intact Tank 241-AY-102 due to volcanic ashfall which prevents air intake through existing ventilation system with W030 intake resulting in excessive vacuum and tank breach.	1. Natural phenomena	F0	S2	D18	07X

Table B-2. Representative Hazards of Analyzed Accidents and the Represented Hazardous Conditions. (24 sheets)

BIN	ID	Material at Risk	Hazardous Condition	Cause	Initial Freq NC	Initial Safety Cons NC	Cause Grp	Rep Acc
C-1-a	W320-B-VENT02	Tank Dome Space Inventory	Release of low energy radioactive aerosol from largely intact Tank 241-AY-102 due to volcanic ashfall which prevents air intake through W030 ventilation upgrade system resulting in excessive vacuum and tank breach.	1. Natural phenomena	F0	S2	D18	07X
C-1-a	W320-B-VENT05	Tank Dome Space Inventory	Release of low energy radioactive aerosol from largely intact Tank 241-AY-102 due to cold water spray into tank which results in excessive vacuum and tank breach.	1. Possible result of slurry distribution	F0	S2	D11	07X
HAZARDOUS CONDITION OF ANALYZED ACCIDENT: 8 - Flammable Gas Deflagrations - DST/SST								
A-1-a	W320-D-ALL07	Tank Inventory	Release of energetic radioactive aerosol from damaged double shell Tank 241-AY-102 due to seismic event which releases flammable gas from the waste and after shocks cause mechanical sparks which ignites the flammable gas mixture.	1. Natural Phenomena	F2	S3	B18	08A
A-1-a	W320-BCD-PUMP04	Tank 241-AY-102 Inventory	Release of energetic radioactive aerosol to atmosphere due to submersible pump being raised too high in Tank 241-AY-102, winch lifting strap breaking, pump falling into waste resulting in a flammable gas release which is ignited by broken electrical cables.	1. Operator error in positioning direction 2. Inadvertent or accidental actuation 3. Winch controller fault	F0	S3	B08	08B
A-1-a	W320-A-TRANS05	Tank 241-C-106 inventory	Release of energetic radioactive aerosol to atmosphere due to temperature out of specification resulting in steam bump when Tank 241-C-106 level is lowered which induces a release of a flammable gas plume and then is ignited.	1. Operator mistake 2. Temperature measurement fault	F0	S3	B08	08C
HAZARDOUS CONDITIONS								
A-1-a	W320-ABCDF-ALL01*	Tank Inventory	Release of energetic radioactive aerosol to atmosphere due to buildup of flammable gas in Tank 241-AY-102 pit drain pipe which is then ignited.	1. Flammable gas generation from tank waste	F1	S3	B08	08X
A-1-a	W320-D-ALL08	Tank Inventory	Release of energetic radioactive aerosol to atmosphere due to start of air lift circulators in Tank 241-AY-102 resulting in a release of flammable gas plume which is then ignited.	1. Human error 2. Communications error with other workers using the tank 3. IOSRs require activation of ALCs in event temperature above limit	F1	S3	B08	08X
A-1-a	W320-D-TRANS05	Tank Inventory	Release of energetic radioactive aerosol to atmosphere due to head space gas concentration above LFL in Tank 241-AY-102 with the start of pumping which ignites the flammable gas.	1. Spontaneous GRE 2. Induced GRE	F1	S3	B08	08X

Table B-2. Representative Hazards of Analyzed Accidents and the Represented Hazardous Conditions. (24 sheets)

BIN	ID	Material at Risk	Hazardous Condition	Cause	Initial Freq NC	Initial Safety Cons NC	Cause Grp	Rep Acc
A-1-a	W320-D-TRANS07	Tank 241-AY-102 inventory	Release of high energetic aerosolized waste to the atmosphere due to sluice water transfer rate being excessive resulting in the Tank 241-AY-102 waste level being lowered quickly with the waste temperature too high. This results in a large steam bump and flammable gas release with ignition.	1. Operator mistake 2. Level indication fault 3. Pump controller fault	F1	S3	B08	08X
A-1-a	W320-D-VENT17	Tank 241-AY-102 Inventory	Release of high energy aerosolized release to the atmosphere due to an ice storm which prevents air inflow into Tank 241-AY-102 resulting in an excessive tank vacuum. This results in a flammable gas release with ignition.	1. Natural phenomena	F1	S3	B08	08X
A-1-a	W320-B-ALL08	Tank Inventory	Large high energy radioactive aerosolized waste release from Tank 241-AY-102 due to a large water intrusion which induces a flammable gas release event. It is then ignited resulting in a dome space fire.	1. Raw water leak 2. Surface water flood	F0	S3	B08	08X
A-1-a	W320-B-TRANS14	Tank Inventory	Large high energy radioactive aerosolized waste release from Tank 241-AY-102 to the atmosphere due to low slurry flow to distributor which results in solids piling up. Pile generates significant amount of flammable gas and LFL is reached in dome space. It is then ignited resulting in a dome space fire.	1. 3-way ball valve in flushing system not fully open 2. Pump controller fault	F0	S3	B08	08X
A-1-a	W320-B-TRANS15	Tank Inventory	Large high energy aerosolized waste release from Tank 241-AY-102 to the atmosphere due to air injected into the waste from the startup of slurry flow from the distributor. Gas is scrubbed from the waste and LFL is reached in dome space. It is then ignited resulting in a dome space fire.	1. Normal procedure	F0	S3	B08	08X
A-1-a	W320-B-TRANS16	Tank Inventory	Large high energy radioactive aerosolized waste release from Tank 241-AY-102 to the atmosphere due to distributor nozzle breaking off which results in solids piling up. Pile generates significant amount of flammable gas and LFL is reached in dome space. It is then ignited resulting in a dome space fire.	1. Primary failure of distributor 2. Severe water hammer 3. Severe thermal shock 4. Corrosion 5. Metal fatigue from vibration	F0	S3	B08	08X
A-1-a	W320-D-VENT13	Tank Inventory	Large high energy radioactive aerosolized waste release from Tank 241-AY-102 to the atmosphere due to influx of cold water spray into tank which results in an excessive vacuum. A large flammable gas release is induced. It is then ignited resulting in a dome space fire.	1. Possible result of slurry distribution	F0	S3	B08	08X

Table B-2. Representative Hazards of Analyzed Accidents and the Represented Hazardous Conditions. (24 sheets)

BIN	ID	Material at Risk	Hazardous Condition	Cause	Initial Freq NC	Initial Safety Cons NC	Cause Grp	Rep Acc
A-1-a	W320-D-VENT16	Tank 241-AY-102 Inventory	Large high energy aerosolized waste release from Tank 241-AY-102 to the atmosphere due to the loss of primary or annulus ventilation for an extended period which results in a gradual rise in waste temperature. Flammable gas builds up in the dome space to the LFL. It is then ignited resulting in a dome space fire.	1. Extended loss of power 2. Severe ventilation casualty	F0	S3	B08	08X
A-1-a	W320-D-VENT18	Tank 241-AY-102 Inventory	Large high energy radioactive aerosolized waste release from Tank 241-AY-102 to the atmosphere due to volcanic ashfall which prevents air inflow to tank. Excessive vacuum results and flammable gas is released to the dome space. It is then ignited resulting in a dome space fire.	1. Natural phenomena	F0	S3	B18	08X
A-1-a	W320-E-TERM03	Tank Inventory	Large high energy radioactive aerosolized waste release from Tank 241-AY-102 to the atmosphere due to lack of controls on operation of tank after it has been turned into a FG group 1 tank. It is ignited from a lightning strike or other event resulting in a dome space fire.	1. Inadequate prediction of waste behavior	F0	S3	D01	08X
C-1-a	W320-B-TERM01	Tank Toxic Gas Inventory	Release of toxic ammonia gas from tank due to burp which exposes facility personnel to toxic gases.	1. Inadequate prediction of waste behavior	F2	S2	D01	08X
C-1-a	W320-B-TRANS13	Tank Dome Space Inventory	Small low energy aerosolized waste release from largely intact tank due to flammable gas collecting in a Tank 241-AY-102 pit where it is ignited resulting in the cover blocks being displaced and falling into pit. Cover block strikes riser-liner joint resulting in an unfiltered release from dome space.	1. Chimney through deep drop legs 2. 6 in. high capacity drain to dome space 3. Pit sealed to minimize inleakage	F2	S2	B08	08X
A-1-a	W320-D-VENT15	Pit radionuclide inventory	Small low energy radioactive aerosolized waste release from standpipes in Tank 241-AY-102 due to flammable gas buildup where it is ignited resulting in the pipe being breached resulting in an unfiltered release.	1. Natural occurrence under proper conditions	F2	S2	B08	08X
A-1-a	W320-BCD-ALL10	Transfer Line Inventory	Small high energy aerosolized waste release to the atmosphere due to plugging and buildup of flammable gas in transfer line . Gas is then ignited resulting in a breach of transfer line. Pumping is started without knowledge of breach.	1. Low flow 2. Inadequate flushing	F1	S2	B08	08X

Table B-2. Representative Hazards of Analyzed Accidents and the Represented Hazardous Conditions. (24 sheets)

BIN	ID	Material at Risk	Hazardous Condition	Cause	Initial Freq NC	Initial Safety Cons NC	Cause Grp	Rep Acc
A-1-a	W320-BCD-PUMP03	Tank 241-AY-102 inventory	Release of small high energy aerosol to atmosphere due to immersible pump being raised too high in Tank 241-AY-102, winch lifting strap breaking, pump falling into waste results in a flammable gas release which is ignited by broken electrical cables, plume burn.	1. Operator error in positioning direction 2. Inadvertent or accidental actuation 3. Winch controller fault	F0	S2	B08	08X
A-1-a	W320-D-VENT14	Pit radionuclide inventory	Small high energy aerosolized waste release from Tank 241-AY-102 to the atmosphere due to the loss of primary or annulus ventilation for an extended period which results in a gradual rise in waste temperature. Flammable gas leaks into annulus. It is then ignited resulting in the annulus being breached.	1. Extended loss of power 2. Severe ventilation casualty	F0	S2	B08	08X
A-1-a	W320-D-PUMP04	Tank Inventory	Release of energetic radioactive aerosol from damaged Tank 241-AY-102 due to pumping of more solids than anticipated. Annulus cooling mod not completed resulting in overheating of waste and a tank bump. Bump induces large flammable gas release. It is then ignited resulting in a dome space fire.	1. Mass flowmeter fault or out of calibration 2. Operator error in positioning slurry pump 3. Inadvertent or accidental repositioning 4. Level indication fault 5. Waste level indicator on pump Tank 241-C-106 fault 6. Pump controller fault	F0	S3	B08	08X
C-1-a	W320-B-ALL07	Tank Dome Space Inventory	Small low energy aerosolized waste release from largely intact tank due to flammable gas collecting in a Tank 241-C-106 pit where it is ignited resulting in the cover blocks being displaced and falling into pit. Cover block strikes riser-liner joint resulting in an unfiltered release from dome space.	1. Chimney through deep drop legs 2. 6 in. high capacity drain to dome space 3. Pit sealed to minimize inleakage	F3	S2	B08	08X
A-1-a	W320-BCD-ALL05	Transfer Line Inventory	Small high energy aerosolized waste release to the atmosphere due to buildup of solids and flammable gas in transfer line . Gas is then ignited resulting in a breach of transfer line. Pumping is started without knowledge of breach.	1. Low flow 2. Inadequate flushing	F1	S2	B08	08X
A-1-a	W320-BCD-ALL06	Transfer Line Inventory	Small high energy aerosolized waste release to the atmosphere due to buildup of solids and flammable gas in transfer line . Gas is then ignited and detonates resulting in a breach of transfer line. Pumping is started without knowledge of breach.	1. Low flow 2. Inadequate flushing	F1	S2	B08	08X

Table B-2. Representative Hazards of Analyzed Accidents and the Represented Hazardous Conditions. (24 sheets)

BIN	ID	Material at Risk	Hazardous Condition	Cause	Initial Freq NC	Initial Safety Cons NC	Cause Grp	Rep Acc
A-1-a	W320-BCD-PUMP05	Tank Inventory	Release of small high energy aerosol to atmosphere due to immersible pump being raised too high in Tank 241-C-106, motor breaks gear assembly, pump freespools into waste resulting in a flammable gas release which is ignited by broken electrical cables, plume burn.	1. Operator error in positioning direction 2. Inadvertent or accidental actuation 3. Winch controller fault	F1	S2	B08	08X
A-1-a	W320-A-TRANS04	Tank Inventory	Release of large high energy aerosolized waste from Tank 241-C-106 due to high waste temperature during slurry transfer which results in a steam bump. Bump induces flammable gas release which is ignited resulting in a dome burn.	1. Flowmeters fault or out of calibration 2. Operator error in positioning Tank 241-C-106 pump 3. Inadvertent or accidental actuation of Tank 241-C-106 pump but not Tank 241-AY-102 pump 4. ENRAF level indication fault 5. Pump controller fault 6. Tank 241-C-106 T/C fault	F0	S2	B08	08X
A-1-a	W320-B-TRANS17	Tank Inventory	Release of high energy aerosolized waste from damaged Tank 241-C-106 due to the sluicer hose breaking which then impinges into the solids releasing a region of retained flammable gas. The gas is then ignited and a plume fire results.	1. Primary failure of Hose 2. Severe Water hammer 3. Severe thermal shock 4. Corrosion 5. Fatigue from vibration	F0	S2	B08	08X
A-1-a	W320-B-TRANS18	Tank Inventory	Release of large high energy aerosolized waste to the atmosphere due to sluice water transfer rate being excessive resulting in the Tank 241-C-106 waste level being lowered quickly with the waste temperature too high. This results in a large steam bump and flammable gas release with a plume burn.	1. Flowmeters fault or out of calibration 2. Operator error in positioning Tank 241-C-106 pump 3. Inadvertent or accidental actuation of Tank 241-C-106 pump but not Tank 241-AY-102 pump 4. ENRAF level indication fault 5. Pump controller fault 6. Tank 241-C-106 T/C fault	F0	S2	B08	08X
A-1-a	W320-BCD-PUMP09	Tank Inventory	Release of large high energy aerosolized waste to atmosphere due to immersible pump being raised too high in Tank 241-C-106, winch lifting strap breaking, pump falling into waste results in a flammable gas release which is ignited by broken electrical cables, plume burn.	1. Operator error in positioning direction 2. Inadvertent or accidental actuation 3. Winch controller fault	F0	S2	B08	08X
A-1-a	W320-D-TRANS06	Tank Inventory	Release of large high energy aerosolized waste to the atmosphere due to slurry transfer rate being excessive resulting in a rapid reduction in the hydrostatic pressure in Tank 241-C-106. This results in a flammable gas release. Gas is ignited and a dome space fire results.	1. Sluice flow control fault	F0	S2	B04	08X

Table B-2. Representative Hazards of Analyzed Accidents and the Represented Hazardous Conditions. (24 sheets)

BIN	ID	Material at Risk	Hazardous Condition	Cause	Initial Freq NC	Initial Safety Cons NC	Cause Grp	Rep Acc
HAZARDOUS CONDITION OF ANALYZED ACCIDENT: 9 - Organic Solvent Fire								
A-1-a	W320-B-ALL09	Tank Inventory and Filter Burden	Release of energetic radioactive aerosol from damaged tank due to formation of organic layer in Tank 241-AY-102 during slurry distribution and subsequent ignition of organics.	1. Sluicing causes organic separation	F1	S3	B04	09A
A-1-a	W320-B-ALL10	Tank Inventory and Filter Burden	Release of energetic radioactive aerosol from damaged tank due to formation of organic layer in Tank 241-C-106 during sluicing and subsequent ignition of organics.	1. Sluicing causes organic separation	F1	S3	B04	09B
HAZARDOUS CONDITIONS								
A-1-a	W320-A-TRANS06	Tank Inventory and Filter Burden	Release of energetic radioactive aerosol from damaged tank due to waste temperature being out of specification during start of slurry transfer in Tank 241-C-106 and subsequent ignition of organics.	1. Operator mistake 2. Temperature measurement fault	F0	S3	B08	09X
A-1-a	W320-B-VENT08	Tank Inventory and Filter Burden	Release of energetic radioactive aerosol from damaged tank due to loss of Tank 241-C-106 ventilation for many months, dry out of waste and subsequent ignition of organics.	1. Loss of power 2. Equipment casualty	F0	S3	B07	09X
A-1-a	W320-B-VENT09*	Tank Inventory and Filter Burden	Release of energetic radioactive aerosol from damaged tank due to loss of Tank 241-AY-102 ventilation for many months, dry out of waste and subsequent ignition of organics.	1. Loss of power 2. Equipment casualty	F0	S3	B07	09X
HAZARDOUS CONDITION OF ANALYZED ACCIDENT: 10 - In-Tank Fuel Fire/Deflagration								
A-1-a	W320-D-CHILL01	Tank Inventory and Filter Burden	Release of energetic radioactive aerosol from damaged tank due to a leak and ignition of propylene glycol from pit chiller into Tank 241-C-106.	1. Piping or tubing leak	F0	S3	B12	10
HAZARDOUS CONDITIONS								
A-1-a	W320-D-CHILL02	Tank Inventory and Filter Burden	Release of energetic radioactive aerosol from damaged tank due to a leak and ignition of propylene glycol from ventilation chiller into Tank 241-C-106.	1. Piping or tubing leak	F0	S3	B12	10X
A-1a	W320-ALL-VENTO 1	Duct and Filter Burden	Release of energetic radioactive aerosol from breached ventilation duct for Tank 241-AY-102 due to a buildup of ammonium nitrate in ventilation ducting and ignition via hot work, range fire etc.	1. Natural occurrence under proper conditions	F1	S2	B08	10X

Table B-2. Representative Hazards of Analyzed Accidents and the Represented Hazardous Conditions. (24 sheets)

BIN	ID	Material at Risk	Hazardous Condition	Cause	Initial Freq NC	Initial Safety Cons NC	Cause Grp	Rep Acc
A-1a	W320-D-VENT01	Tank Dome Space Inventory and Filter Burden	Release of energetic radioactive aerosol from filter breach due to a buildup of ammonium nitrate in ventilation ducting of Tank 241-AY-102 and ignition via hot work, range fire etc.	1. Natural occurrence under proper conditions	F1	S2	B08	10X
HAZARDOUS CONDITION OF ANALYZED ACCIDENT: 11 - Steam Bump								
C-1-a	W320-D-TRANS08	Tank Dome Space Inventory and Filter Burden	Release of low energy radioactive aerosol through failed filters due to excessive fluffing of waste in Tank 241-AY-102 resulting in large steam bump and unfiltered release.	1. Inadequate prediction of waste behavior	F1	S2	D01	11
HAZARDOUS CONDITIONS								
B-1-a	W320-A-TRANS03	Tank Dome Space Inventory and Filter Burden	Release of low energy radioactive aerosol through failed filters from Tank 241-AY-102 due to high waste temperature during slurry transfer and resulting steam bump.	1. Inadvertent or accidental actuation of Tank 241-C-106 pump but not Tank 241-AY-102 pump	F3	S2	D14	11X
B-1-a	W320-A-TRANS01	Tank Dome Space Inventory and Filter Burden	Release of low energy radioactive aerosol through failed filters from Tank 241-C-106 due to a large steam bump	1. Flowmeters fault or out of calibration 2. Operator error in positioning Tank 241-C-106 pump 3. Inadvertent or accidental actuation of Tank 241-C-106 pump but not Tank 241-AY-102 pump 4. ENRAF level indication fault 5. Pump controller fault 6. Tank 241-C-106 T/C fault	F2	S2	D14	11X
B-1-a	W320-D-ALL05	Tank Dome Space Inventory and Filter Burden	Release of low energy radioactive aerosol through failed filters from Tank 241-AY-102 due to long term loss of ventilation system resulting in tank bump and blowout of filters.	1. Loss of power 2. Equipment casualty	F2	S2	D14	11X
C-1-a	W320-D-VENT03	Tank Dome Space Inventory and Filter Burden	Release of low energy radioactive aerosol through failed filters in the 702A ventilation system of Tank 241-AY-102 due to severe ice storm, excessive tank vacuum and resulting tank bump.	1. Natural phenomena	F2	S2	D11	11X
C-1-a	W320-D-VENT05	Tank Dome Space Inventory and Filter Burden	Release of low energy radioactive aerosol through failed filters in the W030 ventilation system due to severe ice storm, excessive tank vacuum and resulting tank bump.	1. Natural phenomena	F2	S2	D11	11X
C-1-a	W320-B-TRANS02	Tank Dome Space Inventory and Filter Burden	Release of low energy radioactive aerosol through failed filters from Tank 241-AY-102 due to low slurry flow, piling of waste at base of distributor and resulting tank bump.	1. 3-way ball valve in flushing system not fully open 2. Pump controller fault 3. Excessive solids in sluicing flow	F1	S2	D07	11X

Table B-2. Representative Hazards of Analyzed Accidents and the Represented Hazardous Conditions. (24 sheets)

BIN	ID	Material at Risk	Hazardous Condition	Cause	Initial Freq NC	Initial Safety Cons NC	Cause Grp	Rep Acc
C-1-a	W320-B-TRANS04	Tank Dome Space Inventory and Filter Burden	Release of low energy radioactive aerosol through failed filters from Tank 241-C-106 due to high slurry transfer rate, high waste temperature and resulting tank bump.	1. Flowmeters fault or out of calibration 2. Operator error in positioning Tank 241-C-106 pump 3. Inadvertent or accidental actuation of Tank 241-C-106 pump but not Tank 241-AY-102 pump 4. ENRAF level indication fault 5. Pump controller fault 6. Tank 241-C-106 T/C fault	F1	S2	D14	11X
C-1-a	W320-B-TRANS05	Tank Dome Space Inventory	Release of low energy radioactive aerosol from largely intact Tank 241-AY-102 due to buildup of solids pile under distributor as a result of low slurry flow which results in steam bump and increased head space vapor pressure.	1. 3-way ball valve in flushing system not fully open 2. Pump controller fault 3. Excessive solids in sluicing flow	F1	S2	D14	11X
C-1-a	W320-B-TRANS09	Tank Dome Space Inventory	Release of low energy radioactive aerosol from largely intact Tank 241-AY-102 due to buildup of solids pile under distributor as a result of the distributor nozzle breaking off which results in steam bump and increased head space vapor pressure.	1. Primary failure of distributor 2. Severe water hammer 3. Severe thermal shock 4. Corrosion 5. Metal fatigue from vibration	F1	S2	D16	11X
C-1-a	W320-BCD-TRANS 08	Tank Dome Space Inventory and Filter Burden	Release of low energy radioactive aerosol through failed filters from Tank 241-C-106 due to undetected high waste temperature and resulting tank bump	1. Expected outcome of high pressure sluice. Many objects are in the waste.	F1	S2	D04	11X
A-1-a	W320-D-ALL02	Tank Inventory	Release of low energy radioactive aerosol through failed filters from Tank 241-AY-102 due to barometric pressure change, high waste temperature and resulting tank bump	1. Ventilation balance upset 2. Sudden barometric pressure change 3. Low intensity seismic event	F1	S2	D07	11X
C-1-a	W320-D-TRANS01	Tank Dome Space Inventory and Filter Burden	Release of low energy radioactive aerosol through failed filters from Tank 241-AY-102 due to rapid waste level change, high waste temperature and resulting tank bump	1. Flowmeters fault or out of calibration 2. Operator error in positioning Tank 241-AY-102 pump 3. Inadvertent or accidental actuation of Tank 241-AY-102 pump but not Tank 241-C-106 pump 4. ENRAF level indication fault 5. Pump controller fault	F1	S2	D14	11X
C-1-a	W320-D-VENT09	Tank Dome Space Inventory	Release of low energy radioactive aerosol from largely intact Tank 241-AY-102 due to loss of primary or annulus ventilation which results in steam release.	1. Extended loss of power 2. Severe ventilation casualty	F1	S2	D07	11X

Table B-2. Representative Hazards of Analyzed Accidents and the Represented Hazardous Conditions. (24 sheets)

BIN	ID	Material at Risk	Hazardous Condition	Cause	Initial Freq NC	Initial Safety Cons NC	Cause Grp	Rep Acc
B-1-a	W320-A-TRANS02	Tank Dome Space Inventory and Filter Burden	Release of low energy radioactive aerosol through failed filters from Tank 241-AY-102 due to lowering of tank level with temperature out of spec resulting in tank bump	1. Flowmeters fault or out of calibration 2. Operator error in positioning Tank 241-C-106 pump 3. ENRAF level indication fault 4. Pump controller fault 5. Tank 241-C-106 T/C fault	F0	S2	D14	11X
C-1-a	W320-B-PUMP01	Tank Dome Space Inventory and Filter Burden	Release of low energy radioactive aerosol from Tank 241-AY-102 through failed filters due to overheating of waste and subsequent steam bump	1. Mass flowmeter fault or out of calibration 2. Operator error in positioning 3. Inadvertent or accidental repositioning 4. Level indication fault 5. Waste level indicator on pump fault 6. Pump controller fault	F0	S2	D14	11X
C-1-a	W320-B-TRANS03	Tank Dome Space Inventory and Filter Burden	Release of low energy radioactive aerosol through failed filters due to condensation of vapor in head space of Tank 241-C-106 which resulted from the breaking off of sluicer head.	1. Primary failure of sluicer 2. Severe Water hammer 3. Severe thermal shock 4. Corrosion 5. Metal fatigue from vibration	F0	S2	D07	11X
C-1-a	W320-BCD-TRANS 05	Tank Dome Space Inventory and Filter Burden	Release of low energy radioactive aerosol through failed filters due to tank bump in Tank 241-AY-102 resulting from the vacuum developed in the head space from the condensation of vapor which resulted from the breaking off of distributor head.	1. Primary failure of distributor 2. Severe Water hammer 3. Severe thermal shock 4. Corrosion 5. Metal fatigue from vibration	F0	S2	D16	11X
C-1-a	W320-BCD-TRANS 06	Tank Dome Space Inventory and Filter Burden	Release of low energy radioactive aerosol through failed filters of Tank 241-AY-102 due to tank bump resulting from the which resulted from the breaking off of distributor head.	1. Primary failure of distributor 2. Severe water hammer 3. Severe thermal shock 4. Corrosion 5. Metal fatigue from vibration	F0	S2	D16	11X
C-1-a	W320-BCD-TRANS 07	Tank Dome Space Inventory and Filter Burden	Release of low energy radioactive aerosol through failed filters of Tank 241-C-106 due to failure of T/C Tree, sluicing outside of temperature specs, atmospheric change, and large steam bump resulting in filter breach.	1. Sluice flow control fault 2. Operator error	F0	S2	D04	11X
A-1-a	W320-D-ALL03	Tank Inventory	Release of low energy radioactive aerosol from Tank 241-AY-102 through failed filters due to bump in interconnected tank resulting in a tank bump and filter breach.	1. Ventilation balance upset 2. Sudden barometric pressure change 3. Low intensity seismic event	F0	S2	D07	11X

Table B-2. Representative Hazards of Analyzed Accidents and the Represented Hazardous Conditions. (24 sheets)

BIN	ID	Material at Risk	Hazardous Condition	Cause	Initial Freq NC	Initial Safety Cons NC	Cause Grp	Rep Acc
A-1-a	W320-D-ALL04	Tank Inventory	Release of low energy radioactive aerosol from Tank 241-AY-102 through failed filters due to bump in interconnected tank resulting in a tank bump and filter breach.	1. Ventilation balance upset 2. Sudden barometric pressure change 3. Low intensity seismic event	F0	S2	D07	11X
B-1-a	W320-D-VENT02	Tank Dome Space Inventory and Filter Burden	Release of low energy radioactive aerosol from Tank 241-AY-102 through failed filters due to inadequate ventilation from W030 resulting in increased waste temperature, steam bump and filter breach.	1. Error in calculations 2. Design error 3. Construction fault	F0	S2	D14	11X
C-1-a	W320-D-VENT06	Tank Dome Space Inventory and Filter Burden	Release of low energy radioactive aerosol from Tank 241-AY-102 through failed filters due to volcanic ashfall , excessive vacuum resulting in large steam bump and filter blowout.	1. Natural phenomena	F0	S2	D18	11X
B-1-a	W320-D-VENT19	Tank Dome Space Inventory and Filter Burden	Release of low energy radioactive aerosol through failed filters due to loss of primary or annulus ventilation for extended period of time resulting in rise in waste temperature and large bump in Tank 241-AY-102.	1. Extended loss of power 2. Severe ventilation casualty	F0	S2	D14	11X
HAZARDOUS CONDITION OF ANALYZED ACCIDENT: 12 - Steam Explosion between Steel Liner and Concrete Shell								
B-1-a	W320-ABCD-TRANS01	Tank Inventory	Release of liquid waste due to sluicer nozzle jet being directed at and breaching Tank 241-C-106 wall resulting in water leaking into liner gap where steam vapor forms and breaches tank bottom.	1. Unavoidable operator action	F3	S2	D04	12
HAZARDOUS CONDITIONS								
B-3-b	W320-ABCD-ALL04	Tank Inventory	Release of liquid waste below grade and aerosol release to atmosphere due to water intrusion into Tank 241-C-106 with water level exceeding maximum operating level resulting in leakage into liner gap, steam formation, breaching of tank bottom and steam bump.	1. Raw water leak 2. Surface water flood 3. Vent system water inleakage 4. Excessive transfer from Tank 241-AY-102 5. Water intrusion in Tank 241-C-105 that cascades over to Tank 241-C-106	F3	S2	D12	12X
B-3-b	W320-ABCD-ALL05	Tank Inventory	Release of liquid waste below grade and aerosol release to atmosphere due to water intrusion into Tank 241-C-106 with water level exceeding maximum operating level resulting in leakage into liner gap, steam formation, breaching of tank bottom and steam bump.	1. Raw water leak 2. Surface water flood 3. Vent system water inleakage 4. Excessive transfer from Tank 241-AY-102 5. Water intrusion in Tank 241-C-105 that cascades over to Tank 241-C-106	F2	S2	D12	12X

Table B-2. Representative Hazards of Analyzed Accidents and the Represented Hazardous Conditions. (24 sheets)

BIN	ID	Material at Risk	Hazardous Condition	Cause	Initial Freq NC	Initial Safety Cons NC	Cause Grp	Rep Acc
A-1-a	W320-ABCD-TRANS02	Tank Inventory	Release of liquid waste below grade and aerosol release to atmosphere due to loss of sluicer arm control in Tank 241-C-106 resulting in jet striking tank liner with liner being breached, water leakage into liner gap, steam formation, breaching of tank bottom and steam bump.	1. Unavoidable operator action	F2	S2	D04	12X
B-1-a	W320-ABCD-TRANS05	Tank Inventory	Release of liquid waste below grade and aerosol release to atmosphere due to sluicer hose break in Tank 241-C-106 resulting in jet striking tank liner with liner being breached, water leakage into liner gap, steam formation, and breaching of tank bottom.	1. Primary failure of Hose 2. Severe Water hammer 3. Fatigue from vibration	F2	S2	D04	12X
B-1-a	W320-ABCD-TRANS07	Tank Inventory	Release of liquid waste below grade and aerosol release to atmosphere due to sluicer flow being excessive in Tank 241-C-106 resulting in jet striking tank liner with liner being breached, water leakage under tank bottom, steam formation, breaching of tank bottom and large steam bump.	1. Sluice flow control fault 2. Operator error	F2	S2	D04	12X
B-1-a	W320-ABCD-TRANS08	Tank Inventory	Release of liquid waste below grade and aerosol release to atmosphere due to sluicer flow excessive into Tank 241-C-106 with water level exceeding maximum operating level resulting in leakage into liner gap, steam formation, breaching of tank bottom and large steam bump.	1. Sluice flow control fault 2. Operator error	F2	S2	D04	12X
B-1-a	W320-BCD-ALL08	Tank Inventory	Release of liquid waste below grade and aerosol release to atmosphere due to excessive corrosion because of waste disturbance in Tank 241-C-106 resulting in leakage into liner gap, steam formation, breaching of tank bottom and steam bump.	1. Inadequate prediction of waste behavior	F2	S2	D16	12X
B-3-b	W320-BCD-TRANS09	Tank Inventory	Release of liquid waste below grade and aerosol release to atmosphere due to loss of pumping from Tank 241-C-106 and continued pumping of Tank 241-AY-102 water exceeds maximum operating level resulting in water leakage into liner gap, steam formation, breaching of tank bottom and large steam bump.	1. Loss of power 2. Equipment casualty	F2	S2	D12	12X
C-3-b	W320-D-ALL09	Tank Inventory	Release of liquid waste below grade and aerosol release to atmosphere due to seismic event Tank 241-C-106 liner is breached resulting in water leakage into liner gap, steam formation, breaching of tank bottom and large steam bump.	1. Natural Phenomena	F2	S2	D18	12X

Table B-2. Representative Hazards of Analyzed Accidents and the Represented Hazardous Conditions. (24 sheets)

BIN	ID	Material at Risk	Hazardous Condition	Cause	Initial Freq NC	Initial Safety Cons NC	Cause Grp	Rep Acc
B-1-a	W320-D-TRANS09	Tank Inventory	Release of liquid waste below grade and aerosol release to atmosphere due to movement of debris during sluicing which impacts and breaches the Tank 241-C-106 liner, resulting in water leakage into liner gap, steam formation, breaching of tank bottom and steam bump.	1. Expected outcome of high pressure sluice. Many objects are in the waste.	F2	S2	D04	12X
A-1-a	W320-ABCD-TRAN S03	Tank 241-C-106 inventory	Release of liquid waste below grade and aerosol release to atmosphere due to siphoning of waste from Tank 241-AY-102 after the stoppage of pumping water exceeds maximum operating level in Tank 241-C-106 resulting in water leakage into liner gap, steam formation, breaching of tank bottom and large steam bump.	1. Buildup of solids in openings 2. Equipment casualty	F1	S2	D04	12X
B-1-a	W320-ABCD-TRAN S09	Tank Inventory	Release of liquid waste below grade and aerosol release to atmosphere due to excessive waste temperature change rate Tank 241-C-106 liner breaches, resulting in water leakage under tank bottom, steam formation, breaching of tank bottom and large steam bump.	1. High temperature in Tank 241-AY-102	F1	S2	D04	12X
A-1-a	W320-BCD-ALL07	Tank 241-C-106 Overflow Volume	Release of liquid waste below grade and aerosol release to atmosphere due to water intrusion into Tank 241-C-105 which travels through cascade line into Tank 241-C-106 with water level exceeding maximum operating level resulting in leakage into liner gap, steam formation, bulging of tank bottom, ripping of liner and steam bump.	1. Raw water leak 2. Surface water flood	F1	S2	D06	12X
B-1-a	W320-F-TERM05	Tank Inventory	Release of liquid waste below grade and aerosol release to atmosphere due to high heat load after completion of sluicing process resulting in the need for water addition to Tank 241-C-106 with a deteriorated tank liner, water leakage into liner gap, steam formation, liner breach and steam bump.	1. Error in calculations	F1	S2	D12	12X
B-1-a	W320-ABCD-TRAN S06	Tank Inventory	Release of liquid waste below grade and aerosol release to atmosphere due to sluicing arm breaking off and penetrating Tank 241-C-106 liner resulting in water leakage into liner gap, steam formation, liner breach and steam bump.	1. Primary failure of sluicer 2. Severe Water hammer 3. Severe thermal shock 4. Corrosion 5. Metal fatigue from vibration	F0	S2	D04	12X

Table B-2. Representative Hazards of Analyzed Accidents and the Represented Hazardous Conditions. (24 sheets)

BIN	ID	Material at Risk	Hazardous Condition	Cause	Initial Freq NC	Initial Safety Cons NC	Cause Grp	Rep Acc
B-1-a	W320-BCD-PUMP08	Tank Inventory	Release of liquid waste below grade and aerosol release to atmosphere due to submersible pump being raised too high, winch lifting strap breaking, pump falling and penetrating Tank 241-C-106 liner resulting in water leakage into liner gap, steam formation, liner bulges/rips and steam bump occurs.	1. Operator error in positioning direction 2. Inadvertent or accidental actuation 3. Winch controller fault	F0	S2	D14	12X
HAZARDOUS CONDITION OF ANALYZED ACCIDENT: 13 - Subsurface Leak Remaining Subsurface								
C-3-b	W320-B-TRANS19	Transfer Line Inventory	Release of radioactive liquid from breached transfer line due to a leak from primary transfer line and a defective secondary line resulting in an underground spill.	1. Line corrosion 2. ground movement 3. Aging	F1	S0	D12	13
HAZARDOUS CONDITIONS								
C-3-b	W320-B-ALL11	Tank Inventory	Release of liquid waste due to large water intrusion into Tank 241-C-106 resulting in high hydrostatic pressure and tank breach.	1. Raw water leak 2. Surface water flood 3. Vent system water inleakage 4. Excessive transfer from Tank 241-AY-102 5. Water intrusion in Tank 241-C-105 that cascades over to Tank 241-C-106	F2	S2	D19	13X
HAZARDOUS CONDITION OF ANALYZED ACCIDENT: 14 - Subsurface Leak Resulting in Pool								
C-2-b	W320-B-TRANS22	Tank 241-AY-102 inventory	Release of radioactive liquid from transfer line due to local flooding during transfer which results in line being uncovered and breached.	1. Raw water leak 2. Natural flow	F3	S2	D19	14
HAZARDOUS CONDITION OF ANALYZED ACCIDENT: 15 - Surface Leak Resulting in Pool								
C-2-b	W320-B-FLUSH06	Flushing water in Tank 241-AY-102 Pit	Release of radioactive liquid from transfer line due to a pipe break in Tank 241-AY-102 pit with the high capacity drain cover on resulting in overflow of pit onto the ground.	1. Equipment failure 2. Maintenance or assembly error	F2	S2	D12	15A
C-2-b	W320-BCD-TRANS10	Tank 241-AY-102 inventory	Release of radioactive liquid release from sluice transfer line due to the blank flange being left off flushing connection in Tank 241-AY-102 pit and drain cover left on resulting in overflow of pit onto the ground during sluicing.	1. Maintenance error 2. Communications error between different groups using the pit	F2	S2	E06	15B

Table B-2. Representative Hazards of Analyzed Accidents and the Represented Hazardous Conditions. (24 sheets)

BIN	ID	Material at Risk	Hazardous Condition	Cause	Initial Freq NC	Initial Safety Cons NC	Cause Grp	Rep Acc
HAZARDOUS CONDITIONS								
C-2-b	W320-ABCD-ALLO 7	Tank 241-C-106 Overflow Volume	Release of radioactive liquid from Tank 241-C-106 onto the ground due to large water intrusion into tank.	1. Raw water leak 2. Surface water flood 3. Vent system water inleakage 4. Excessive transfer from Tank 241-AY-102 5. Water intrusion in Tank 241-C-105 that cascades over to Tank 241-C-106	F1	S3	D06	15X
C-2-b	W320-ABCD-ALLO 8*	Tank 241-C-106 Overflow Volume	Release of radioactive liquid from Tank 241-C-106 due to siphoning of waste from Tank 241-AY-102 into Tank 241-C-106.	1. Plugging of antisiphon holes 2. Loss of electrical power to the pumps 3. Shutdown from operations	F1	S3	D06	15X
C-2-b	W320-B-FLUSH07	Flushing water in transfer line	Release of radioactive liquid from transfer line due to pipe break in pit during flushing and drain plug cover on resulting in overflow of pit onto the ground.	1. Equipment failure 2. Maintenance or assembly error	F2	S2	D12	15X
C-2-b	W320-B-ALL13	Tank 241-AY-102 Overflow Volume	Release of radioactive liquid from Tank 241-AY-102 due to large water intrusion into tank.	1. Raw water leak 2. Surface water flood 3. Vent system water inleakage	F1	S2	D06	15X
HAZARDOUS CONDITION OF ANALYZED ACCIDENT: 16 Spray Leak in Structure or from Overground Waste Transfer								
A-1-a	W320-BCD-TRANS 11	Transfer Line Inventory	Release of energetic radioactive aerosol from transfer line due to blank flange left off flushing connection in Tank 241-C-106 pit after flushing. Cover plug is lifted out of cover block on initiation of sluicing process.	1. Maintenance error 2. Communications error between different groups using the pit	F3	S3	E06	16A
A-1-a	W320-BCD-TRANS 12	Transfer Line Inventory	Release of energetic radioactive aerosol from transfer line due to blank flange left off flushing connection in Tank 241-AY-102 pit after flushing. Cover plug is lifted out of cover block on initiation of sluicing process.	1. Maintenance error 2. Communications error between different groups using the pit	F3	S3	E06	16B
HAZARDOUS CONDITIONS								
A-1-a	W320-BCD-FLUSH 01	Transfer Line Inventory	Release of energetic radioactive aerosol from transfer line due to 3 way valve left in flush position after flushing. Cover plug is lifted out of cover block on initiation of sluicing process.	1. Maintenance error 2. Communications error between different groups using the pit	F3	S3	E06	16X

Table B-2. Representative Hazards of Analyzed Accidents and the Represented Hazardous Conditions. (24 sheets)

BIN	ID	Material at Risk	Hazardous Condition	Cause	Initial Freq NC	Initial Safety Cons NC	Cause Grp	Rep Acc
A-1-a	W320-BCD-FLUSH 02*	Transfer Line Inventory	Release of energetic radioactive aerosol from flush tank of transfer truck due to start of submersible pump in Tank 241-C-106 during the flush of slurry transfer line. Flush tank is filled and pressurized resulting in rupture of tank or transfer line.	1. Human error 2. Communications error between different groups	F3	S3	E06	16X
A-1-a	W320-ABCD-TRAN S11	Tank Inventory	Release of energetic radioactive aerosol from transfer line in pit due to flammable gas collecting in pit and being ignited. Cover block lifted and falls onto piping in pit resulting in spray release.	1. Chimney through deep drop legs 2. 6 in. high capacity drain to dome space 3. Pit sealed to minimize inleakage	F2	S3	B08	16X
B-1-a	W320-ABCD-TRAN S12	Transfer Line Inventory	Release of energetic radioactive aerosol from line break due to pipe or jumper breach in distributor pit of Tank 241-AY-102 with cover block off during slurry transfer.	1. Pipe failure 2. Improper Assembly 3. Other operators change jumper hookup 4. Connector faults	F2	S3	D12	16X
A-1-a	W320-B-TRANS23	Transfer Line Inventory	Release of energetic radioactive aerosol from line break due to pipe or jumper breach in pump pit of Tank 241-AY-102 with cover block off during sluicing.	1. Pipe failure 2. Improper Assembly 3. Other operators change jumper hookup 4. Connector faults	F2	S3	D12	16X
A-1-a	W320-B-TRANS24	Transfer Line Inventory	Release of energetic radioactive aerosol from line break due to pipe or jumper breach in pump pit of Tank 241-C-106 with cover block off.	1. Pipe failure 2. Improper Assembly 3. Other operators change jumper hookup 4. Connector faults	F2	S3	D12	16X
A-1-a	W320-B-TRANS25	Transfer Line Inventory	Release of energetic radioactive aerosol from line break due to pipe or jumper breach in sluice pit of Tank 241-C-106 with cover block off.	1. Pipe failure 2. Improper Assembly 3. Other operators change jumper hookup 4. Connector faults	F2	S3	D12	16X
A-1-a	W320-B-TRANS26	Transfer Line Inventory	Release of energetic radioactive aerosol from transfer line in Tank 241-C-106 pit due to flammable gas collecting in pit and being ignited. Cover block lifted and falls onto piping in pit resulting in spray release.	1. Chimney through deep drop legs 2. 6 in. high capacity drain to dome space 3. Pit sealed to minimize inleakage	F2	S3	B08	16X
B-1-a	W320-D-TRANS10	Transfer Line Inventory	Release of energetic radioactive aerosol from jumper in pit due to seismic event. Cover block breached by ground motion resulting in spray release.	1. Natural Phenomena	F2	S3	D18	16X

Table B-2. Representative Hazards of Analyzed Accidents and the Represented Hazardous Conditions. (24 sheets)

BIN	ID	Material at Risk	Hazardous Condition	Cause	Initial Freq NC	Initial Safety Cons NC	Cause Grp	Rep Acc
A-1-a	W320-B-TRANS27	Transfer Line Inventory	Release of energetic radioactive aerosol from transfer line in pit due to flammable gas collecting in pit and being ignited. Cover block lifted and falls onto piping in pit resulting in spray release.	1. Chimney through deep drop legs 2. 6 in. high capacity drain to dome space 3. Pit sealed to minimize inleakage	F1	S3	B08	16X
B-1-a	W320-D-PUMP01	Tank 241-AY-102 Inventory	Release of energetic radioactive aerosol from line break in Tank 241-AY-102 transfer pit due to immersible pump being positioned too high resulting in air entrainment in transfer line. Booster pump torques in reaction to air in transfer line and jumper connectors break. Cover block is off.	1. Operator error in positioning 2. Inadvertent or accidental repositioning 3. Level indication fault 4. Waste level indicator on pump fault	F1	S3	D12	16X
B-1-a	W320-D-PUMP03	Transfer Line Inventory	Release of energetic radioactive aerosol from line break in Tank 241-C-106 transfer pit due to immersible pump being positioned too high resulting in air entrainment in transfer line. Booster pump torques in reaction to air in transfer line and jumper connectors break. Cover block is off.	1. Operator error in positioning 2. Inadvertent or accidental repositioning 3. Level indication fault 4. Waste level indicator on pump fault	F1	S3	D12	16X
B-1-a	W320-B-TRANS28	Tank 241-C-106 inventory	Release of radioactive aerosol from covered pit due to jumper or pipe breach in Tank 241-AY-102 distributor pit resulting in spray release from pit.	1. Pipe failure 2. Improper Assembly 3. Other operators change jumper hookup 4. Connector faults	F3	S2	D12	16X
B-1-a	W320-B-TRANS29	Tank 241-AY-102 inventory	Release of radioactive aerosol from covered pit due to jumper or pipe breach in Tank 241-AY-102 pump pit resulting in spray release from pit.	1. Pipe failure 2. Improper Assembly 3. Other operators change jumper hookup 4. Connector faults	F3	S2	D12	16X
B-1-a	W320-B-TRANS30	Tank 241-C-106 inventory	Release of radioactive aerosol from covered pit due to jumper or pipe breach in Tank 241-C-106 pump pit resulting in spray release from pit.	1. Pipe failure 2. Improper Assembly 3. Other operators change jumper hookup 4. Connector faults	F3	S2	D12	16X
B-1-a	W320-B-TRANS31	Tank 241-AY-102 inventory	Release of radioactive aerosol from covered pit due to jumper or pipe breach in Tank 241-C-106 sluice pit resulting in spray release from pit.	1. Pipe failure 2. Improper Assembly 3. Other operators change jumper hookup 4. Connector faults	F3	S2	D12	16X

Table B-2. Representative Hazards of Analyzed Accidents and the Represented Hazardous Conditions. (24 sheets)

BIN	ID	Material at Risk	Hazardous Condition	Cause	Initial Freq NC	Initial Safety Cons NC	Cause Grp	Rep Acc
A-1-a	W320-BCD-TRANS 13	Tank 241-C-106 inventory	Release of energetic radioactive aerosol from transfer line due to blank flange left off flushing connection and 3 way valve left in flush position after flushing. Cover plug remains in place on initiation of sluicing process. High capacity drain cover left on and pit overflows.	1. Maintenance error 2. Communications error between different groups using the pit	F3	S2	E06	16X
HAZARDOUS CONDITION OF ANALYZED ACCIDENT: 17 - Spray Leak from Underground Waste Transfer Line								
B-1-a	W320-D-TRANS11	Transfer Line Inventory	Release of large high energy aerosolized radioactive waste to the atmosphere from a spray leak from transfer line due to seismic event.	1. Natural Phenomena	F1	S3	D18	17
HAZARDOUS CONDITIONS								
A-1-a	W320-B-TRANS32	Transfer Line Inventory	Release of large high energy aerosolized radioactive waste from a spray leak from transfer line break due to aircraft strike on underground transfer line berm.	1. Light aircraft crash	F1	S3	D23	17X
HAZARDOUS CONDITIONS: 18a - Natural Phenomena - Seismic Events								
C-1-a	W320-D-ALL06	Tank Dome Space Inventory and Filter Burden	Release of a small amount of low energy aerosolized waste through failed filters due to seismic event which induces a steam bump in Tank 241-AY-102, and failure of filters or ducting.	1. Natural Phenomena	F1	S2	D18	18F
HAZARDOUS CONDITIONS: 18e - Natural Phenomena - Volcanic Activity								
A-1-a	W320-B-ALL01-dup	Tank Inventory	Release of a large amount of high energy aerosolized waste from Tank 241-C-106 dome collapse due to volcanic ashfall.	1. Natural phenomena	F0	S3	C18	06X
A-1-a	W320-D-VENT18-dup	Tank 241-AY-102 Inventory	Large high energy radioactive aerosolized waste release from Tank 241-AY-102 to the atmosphere due to volcanic ashfall which prevents air inflow to tank. Excessive vacuum results and flammable gas is released to the dome space. It is then ignited resulting in a dome space fire.	1. Natural phenomena	F0	S3	B18	08X
HAZARDOUS CONDITIONS: 18f - Natural Phenomena - High Winds/Dust Devils								
C-1-a	W320-ALL-TRANS 02	Duct and Filter Burden	Release of small high energy aerosolized waste due to high winds or tornado resulting in failed ventilation ducting and unfiltered release.	1. Natural occurrence under proper conditions	F2	S2	D20	18A

Table B-2. Representative Hazards of Analyzed Accidents and the Represented Hazardous Conditions. (24 sheets)

BIN	ID	Material at Risk	Hazardous Condition	Cause	Initial Freq NC	Initial Safety Cons NC	Cause Grp	Rep Acc
C-1-a	W320-B-ALL14	Tank Dome Space Inventory	Release of small low energy aerosolized waste to the atmosphere from intact pit due to high winds/dust devils during plug removal from pit cover.	1. High winds	F1	S2	D20	18A
Radiation Protection								
RP	W320-BCD-FLUSH 03*	Transfer Line Inventory	Personnel exposure to ionizing radiation from flush tank of transfer truck due to start of submersible pump in Tank 241-C-106 during the flush of slurry transfer line. Flush tank is filled with radioactive material.	1. Operator Error 2. Failure in submersible pump circuitry	F3	S2	F06	21X

APPENDIX C

HAZARD EVALUATION RESULTS

This page intentionally left blank.

APPENDIX C

HAZARD EVALUATION RESULTS

LIST OF TABLES

C-1 Hazardous Conditions With Potential Significant Offsite Consequences (S3) C-1

C-2 Hazardous Conditions With Potential Significant Onsite Consequences (S2) C-7

C-3 Hazardous Conditions With Potential Significant Worker Consequences (S1) C-18

C-4 Hazardous Conditions with Potential Severe Environmental Consequences (E2 and E3) C-19

C-5 Hazardous Conditions With Potential Radiation Exposure Consequences (RP) C-28

C-6 Hazardous Conditions With Potential Occupational Safety Consequences (OCC) C-29

APPENDIX C
LIST OF TERMS

ALC	air lift circulator
GRE	gas release event
IOSR	Interim Operational Safety Requirements
LFL	lower flammability limit

Table C-1. Hazardous Conditions With Potential Significant Offsite Consequences (S3). (6 sheets)

ID	Hazardous Condition	Cause	Initial Freq NC	Env Cons
W320-BCD-FLUSH01	Release of energetic radioactive aerosol from transfer line due to 3-way valve left in flush position after flushing. Cover plug is lifted out of cover block on initiation of sluicing process.	1. Maintenance error 2. Communications error between different groups using the pit	F3	E2
W320-BCD-FLUSH02*	Release of energetic radioactive aerosol from flush tank of transfer truck due to start of submersible pump in Tank 241-C-106 during the flush of slurry transfer line. Flush tank is filled and pressurized resulting in rupture of tank or transfer line.	1. Human error 2. Communications error between different groups	F3	E2
W320-BCD-TRANS11	Release of energetic radioactive aerosol from transfer line due to blank flange left off flushing connection in Tank 241-C-106 pit after flushing. Cover plug is lifted out of cover block on initiation of sluicing process.	1. Maintenance error 2. Communications error between different groups using the pit	F3	E2
W320-BCD-TRANS12	Release of energetic radioactive aerosol from transfer line due to blank flange left off flushing connection in Tank 241-AY-102 pit after flushing. Cover plug is lifted out of cover block on initiation of sluicing process.	1. Maintenance error 2. Communications error between different groups using the pit	F3	E2
W320-ABCD-TRANS11	Release of energetic radioactive aerosol from transfer line in pit due to flammable gas collecting in pit and being ignited. Cover block lifted and falls onto piping in pit resulting in spray release.	1. Chimney through deep drop legs 2. 6 in. high capacity drain to dome space 3. Pit sealed to minimize inleakage	F2	E2
W320-ABCD-TRANS11	Release of energetic radioactive aerosol release from line break due to flammable gas ignition in pit with cover block falling onto piping.	1. Chimney through deep drop legs 2. 6 in. high capacity drain to dome space 3. Pit sealed to minimize inleakage	F2	E2
W320-ABCD-TRANS12	Release of energetic radioactive aerosol from line break due to pipe or jumper breach in distributor pit of Tank 241-AY-102 with cover block off during slurry transfer.	1. Pipe failure 2. Improper Assembly 3. Other operators change jumper hookup 4. Connector faults	F2	E2
W320-B-TRANS23	Release of energetic radioactive aerosol from line break due to pipe or jumper breach in pump pit of Tank 241-AY-102 with cover block off during sluicing.	1. Pipe failure 2. Improper Assembly 3. Other operators change jumper hookup 4. Connector faults	F2	E2
W320-B-TRANS24	Release of energetic radioactive aerosol from line break due to pipe or jumper breach in pump pit of Tank 241-C-106 with cover block off.	1. Pipe failure 2. Improper Assembly 3. Other operators change jumper hookup 4. Connector faults	F2	E2
W320-B-TRANS25	Release of energetic radioactive aerosol from line break due to pipe or jumper breach in sluice pit of Tank 241-C-106 with cover block off.	1. Pipe failure 2. Improper Assembly 3. Other operators change jumper hookup 4. Connector faults	F2	E2

Table C-1. Hazardous Conditions With Potential Significant Offsite Consequences (S3). (6 sheets)

ID	Hazardous Condition	Cause	Initial Freq NC	Env Cons
W320-B-TRANS26	Release of energetic radioactive aerosol from transfer line in Tank 241-C-106 pit due to flammable gas collecting in pit and being ignited. Cover block lifted and falls onto piping in pit resulting in spray release.	1. Chimney through deep drop legs 2. 6 in. high capacity drain to dome space 3. Pit sealed to minimize inleakage	F2	E2
W320-D-ALL07	Release of energetic radioactive aerosol from damaged double shell Tank 241-AY-102 due to seismic event which releases flammable gas from the waste and after shocks cause mechanical sparks which ignites the flammable gas mixture.	1. Natural Phenomena	F2	E2
W320-D-TRANS10	Release of energetic radioactive aerosol from jumper in pit due to seismic event. Cover block breached by ground motion resulting in spray release.	1. Natural Phenomena	F2	E2
W320-B-ALL09	Release of energetic radioactive aerosol from damaged tank due to formation of organic layer in Tank 241-AY-102 during slurry distribution and subsequent ignition of organics.	1. Sluicing causes organic separation	F1	E3
W320-B-ALL10	Release of energetic radioactive aerosol from damaged tank due to formation of organic layer in Tank 241-C-106 during sluicing and subsequent ignition of organics.	1. Sluicing causes organic separation	F1	E3
W320-ABCD-ALL01	Release of energetic radioactive aerosol from damaged tank due to flooding on top of Tank 241-C-106 dome	1. Raw water line rupture 2. Heavy rainfall	F1	E2
W320-ABCD-ALL02	Release of energetic radioactive aerosol from damaged tank due to flooding on top of Tank 241-AY-102 dome	1. Raw water line rupture 2. Heavy rainfall	F1	E2
W320-ABCD-ALL07	Release of radioactive liquid from Tank 241-C-106 onto the ground due to large water intrusion into tank.	1. Raw water leak 2. Surface water flood 3. Vent system water inleakage 4. Excessive transfer from Tank 241-AY-102 5. Water intrusion in Tank 241-C-105 that cascades over to Tank 241-C-106	F1	E2
W320-ABCD-ALL08*	Release of radioactive liquid from Tank 241-C-106 due to siphoning of waste from Tank 241-AY-102 into Tank 241-C-106	1. Plugging of antisiphon holes 2. Loss of electrical power to the pumps 3. Shutdown from operations	F1	E2
W320-ABCD-CHILL03	Release of energetic radioactive aerosol from collapsed Tank 241-C-106 due to excessive cooling from process chiller which restricts inflow and loop seal fails to operate.	1. Chiller control fault 2. High humidity	F1	E2
W320-ABCDF-ALL01*	Release of energetic radioactive aerosol to atmosphere due to buildup of flammable gas in Tank 241-AY-102 pit drain pipe which is then ignited.	1. Flammable gas generation from tank waste	F1	E2

Table C-1. Hazardous Conditions With Potential Significant Offsite Consequences (S3). (6 sheets)

ID	Hazardous Condition	Cause	Initial Freq NC	Env Cons
W320-B-FLUSH04	Release of low energy radioactive aerosol from breached Tank 241-C-106 due to flushing water spray through sluice nozzle resulting in excessive tank vacuum.	1. Planned	F1	E2
W320-B-TRANS27	Release of energetic radioactive aerosol from transfer line in pit due to flammable gas collecting in pit and being ignited. Cover block lifted and falls onto piping in pit resulting in spray release.	1. Chimney through deep drop legs 2. 6 in. high capacity drain to dome space 3. Pit sealed to minimize inleakage	F1	E2
W320-B-TRANS32	Release of large high energy aerosolized radioactive waste from a spray leak from transfer line break due to aircraft strike on underground transfer line berm.	1. Light aircraft crash	F1	E2
W320-BCD-ALL03	Release of energetic radioactive aerosol from damaged Tank 241-C-106 due to excessive vacuum resulting from ventilation system fan overspeed and failure of tank loop seal failure.	1. Rotameter valve to controller fault 2. Operator error in adjusting rotameter or inadvertent adjustment	F1	E2
W320-D-ALL08	Release of energetic radioactive aerosol to atmosphere due to start of air lift circulators in Tank 241-AY-102 resulting in a release of flammable gas plume which is then ignited.	1. Human error 2. Communications error with other workers using the tank 3. IOSRs require activation of ALCs in event temperature above limit	F1	E2
W320-D-PUMP01	Release of energetic radioactive aerosol from line break in Tank 241-AY-102 transfer pit due to immersible pump being positioned to high resulting in air entrainment in transfer line. Booster pump torques in reaction to air in transfer line and jumper connectors break. Cover block is off.	1. Operator error in positioning 2. Inadvertent or accidental repositioning 3. Level indication fault 4. Waste level indicator on pump fault	F1	E2
W320-D-PUMP03	Release of energetic radioactive aerosol from line break in Tank 241-C-106 transfer pit due to immersible pump being positioned to high resulting in air entrainment in transfer line. Booster pump torques in reaction to air in transfer line and jumper connectors break. Cover block is off.	1. Operator error in positioning 2. Inadvertent or accidental repositioning 3. Level indication fault 4. Waste level indicator on pump fault	F1	E2
W320-D-TRANS05	Release of energetic radioactive aerosol to atmosphere due to head space gas concentration above LFL in Tank 241-AY-102 with the start of pumping which ignites the flammable gas.	1. Spontaneous GRE 2. Induced GRE	F1	E2
W320-D-TRANS07	Release of high energetic aerosolized waste to the atmosphere due to sluice water transfer rate being excessive resulting in the Tank 241-AY-102 waste level being lowered quickly with the waste temperature to high. This results in a large steam bump and flammable gas release with ignition.	1. Operator mistake 2. Level indication fault 3. Pump controller fault	F1	E2
W320-D-TRANS11	Release of large high energy aerosolized radioactive waste to the atmosphere from a spray leak from transfer line due to seismic event.	1. Natural Phenomena	F1	E2

Table C-1. Hazardous Conditions With Potential Significant Offsite Consequences (S3). (6 sheets)

ID	Hazardous Condition	Cause	Initial Freq NC	Env Cons
W320-D-VENT12	Release of energetic radioactive aerosol from collapsed Tank 241-C-106 due to incorrect alignment of current ventilation system through sluice nozzle resulting in excessive tank vacuum with loop seal failure.	1. Operator error 2. Communications error	F1	E2
W320-D-VENT17	Release of high energy aerosolized release to the atmosphere due to an ice storm which prevents air inflow into Tank 241-AY-102 resulting in an excessive tank vacuum. This results in a flammable gas release with ignition.	1. Natural phenomena	F1	E2
W320-D-VENT20	Release of energetic radioactive aerosol from collapsed Tank 241-C-106 due to incorrect alignment of new ventilation system through sluice nozzle resulting in excessive tank vacuum with loop seal failure.	1. Operator error 2. Communications error	F1	E2
W320-A-TRANS06	Release of energetic radioactive aerosol from damaged tank due to waste temperature being out of specification during start of slurry transfer in Tank 241-C-106 and subsequent ignition of organics.	1. Operator mistake 2. Temperature measurement fault	F0	E3
W320-B-VENT08	Release of energetic radioactive aerosol from damaged tank due to loss of Tank 241-C-106 ventilation for many months, dry out of waste and subsequent ignition of organics.	1. Loss of power 2. Equipment casualty	F0	E3
W320-B-VENT09*	Release of energetic radioactive aerosol from damaged tank due to loss of Tank 241-AY-102 ventilation for many months, dry out of waste and subsequent ignition of organics.	1. Loss of power 2. Equipment casualty	F0	E3
W320-D-CHILL01	Release of energetic radioactive aerosol from damaged tank due to a leak and ignition of propylene glycol from pit chiller into Tank 241-C-106.	1. Piping or tubing leak	F0	E3
W320-D-CHILL02	Release of energetic radioactive aerosol from damaged tank due to a leak and ignition of propylene glycol from ventilation chiller into Tank 241-C-106.	1. Piping or tubing leak	F0	E3
W320-A-TRANS05	Release of energetic radioactive aerosol to atmosphere due to temperature out of specification resulting in steam bump when Tank 241-C-106 level is lowered which induces a release of a flammable gas plume and then is ignited.	1. Operator mistake 2. Temperature measurement fault	F0	E2
W320-ABCD-ALL03	Release of energetic radioactive aerosol from tank dome collapse due to flooding on top of tank dome	1. Raw water line rupture 2. Heavy rainfall	F0	E2
W320-B-ALL01	Release of a large amount of high energy aerosolized waste from Tank 241-C-106 dome collapse due to volcanic ashfall.	1. Natural phenomena	F0	E2
W320-B-ALL02	Release of a large amount of high energy aerosolized waste from 241-AY-102 Tank dome collapse due to volcanic ashfall.	1. Natural phenomena	F0	E2

Table C-1. Hazardous Conditions With Potential Significant Offsite Consequences (S3). (6 sheets)

ID	Hazardous Condition	Cause	Initial Freq NC	Env Cons
W320-B-ALL03	Release of high energy aerosolized waste to the atmosphere from Tank 241-C-106 dome collapse due to extreme snow fall.	1. Natural phenomena	F0	E2
W320-B-ALL04	Release of large amount of high energy aerosolized waste from 241-AY-102 Tank dome collapse due to extreme snow fall.	1. Natural phenomena	F0	E2
W320-B-ALL05	Release of energetic radioactive aerosol from Tank 241-C-106 dome collapse due to dome being overloaded.	1. Maintenance error 2. Procedure violation	F0	E2
W320-B-ALL06	Release of energetic radioactive aerosol from 241-AY-102 Tank dome collapse due to dome being overloaded.	1. Maintenance error 2. Procedure violation	F0	E2
W320-B-ALL08	Large high energy radioactive aerosolized waste release from Tank 241-AY-102 due to a large water intrusion which induces a flammable gas release event. It is then ignited resulting in a dome space fire.	1. Raw water leak 2. Surface water flood	F0	E2
W320-B-TRANS14	Large high energy radioactive aerosolized waste release from Tank 241-AY-102 to the atmosphere due to low slurry flow to distributor which results in solids piling up. Pile generates significant amount of flammable gas and LFL is reached in dome space. It is then ignited resulting in a dome space fire.	1. 3-way ball valve in flushing system not fully open 2. Pump controller fault	F0	E2
W320-B-TRANS15	Large high energy aerosolized waste release from Tank 241-AY-102 to the atmosphere due to air injected into the waste from the startup of slurry flow from the distributor. Gas is scrubbed from the waste and LFL is reached in dome space. It is then ignited resulting in a dome space fire.	1. Normal procedure	F0	E2
W320-B-TRANS16	Large high energy radioactive aerosolized waste release from Tank 241-AY-102 to the atmosphere due to distributor nozzle breaking off which results in solids piling up. Pile generates significant amount of flammable gas and LFL is reached in dome space. It is then ignited resulting in a dome space fire.	1. Primary failure of distributor 2. Severe water hammer 3. Severe thermal shock 4. Corrosion 5. Metal fatigue from vibration	F0	E2
W320-BCD-ALL02	Release of energetic radioactive aerosol from collapsed Tank 241-AY-102 due to excessive vacuum resulting from W030 ventilation system inlet damper closing and failure of PCV fails to relieve vacuum.	1. Rotameter valve to controller fault 2. Operator error in adjusting rotameter or inadvertent adjustment	F0	E2
W320-BCD-PUMP04	Release of energetic radioactive aerosol to atmosphere due to submersible pump being raised to high in Tank 241-AY-102, winch lifting strap breaking, pump falling into waste resulting in a flammable gas release which is ignited by broken electrical cables.	1. Operator error in positioning direction 2. Inadvertent or accidental actuation 3. Winch controller fault	F0	E2

Table C-1. Hazardous Conditions With Potential Significant Offsite Consequences (S3). (6 sheets)

ID	Hazardous Condition	Cause	Initial Freq NC	Env Cons
W320-D-PUMP04	Release of energetic radioactive aerosol from damaged Tank 241-AY-102 due to pumping of more solids than anticipated. Annulus cooling mod not completed resulting in overheating of waste and a tank bump. Bump induces large flammable gas release. It is then ignited resulting in a dome space fire.	1. Mass flowmeter fault or out of calibration 2. Operator error in positioning slurry pump 3. Inadvertent or accidental repositioning 4. Level indication fault 5. Waste level indicator on pump Tank 241-C-106 fault 6. Pump controller fault	F0	E2
W320-D-VENT13	Large high energy radioactive aerosolized waste release from Tank 241-AY-102 to the atmosphere due to influx of cold water spray into tank which results in an excessive vacuum. A large flammable gas release is induced. It is then ignited resulting in a dome space fire.	1. Possible result of slurry distribution	F0	E2
W320-D-VENT16	Large high energy aerosolized waste release from Tank 241-AY-102 to the atmosphere due to the loss of primary or annulus ventilation for an extended period which results in a gradual rise in waste temperature. Flammable gas builds up in the dome space to the LFL. It is then ignited resulting in a dome space fire.	1. Extended loss of power 2. Severe ventilation casualty	F0	E2
W320-D-VENT18	Large high energy radioactive aerosolized waste release from Tank 241-AY-102 to the atmosphere due to volcanic ashfall which prevents air inflow to tank. Excessive vacuum results and flammable gas is released to the dome space. It is then ignited resulting in a dome space fire.	1. Natural phenomena	F0	E2
W320-E-TERM03	Large high energy radioactive aerosolized waste release from Tank 241-AY-102 to the atmosphere due to lack of controls on operation of tank after it has been turned into a FG group 1 tank. It is ignited from a lightning strike or other event resulting in a dome space fire.	1. Inadequate prediction of waste behavior	F0	E2

ALC = air lift circulator.
GRE = gas release event.
HEPA = high efficiency particulate air (filter).
IOSR = Interim Operational Safety Requirements.
LFL = lower flammability limit.

Table C-2. Hazardous Conditions With Potential Significant Onsite Consequences (S2). (11 sheets)

ID	Hazardous Condition	Cause	Initial Freq NC	Env Cons
W320-ABCD-ALL04	Release of liquid waste below grade and aerosol release to atmosphere due to water intrusion into Tank 241-C-106 with water level exceeding maximum operating level resulting in leakage into liner gap, steam formation, breaching of tank bottom and steam bump.	1. Raw water leak 2. Surface water flood 3. Vent system water inleakage 4. Excessive transfer from Tank 241-AY-102 5. Water intrusion in Tank 241-C-105 that cascades over to Tank 241-C-106	F3	E2
W320-ABCD-TRANS01	Release of liquid waste due to sluicer nozzle jet being directed at and breaching Tank 241-C-106 wall resulting in water leaking into liner gap where steam vapor forms and breaches tank bottom.	1. Unavoidable operator action	F3	E2
W320-A-TRANS03	Release of low energy radioactive aerosol through failed filters from Tank 241-AY-102 due to high waste temperature during slurry transfer and resulting steam bump.	1. Inadvertent or accidental actuation of Tank 241-C-106 pump but not Tank 241-AY-102 pump	F3	E1
W320-B-ALL07	Small low energy aerosolized waste release from largely intact tank due to flammable gas collecting in a Tank 241-C-106 pit where it is ignited resulting in the cover blocks being displaced and falling into pit. Cover block strikes riser-liner joint resulting in an unfiltered release from dome space.	1. Chimney through deep drop legs 2. 6 in. high capacity drain to dome space 3. Pit sealed to minimize inleakage	F3	E1
W320-B-TRANS22	Release of radioactive liquid from transfer line due to local flooding during transfer which results in line being uncovered and breached.	1. Raw water leak 2. Natural flow	F3	E1
W320-B-TRANS28	Release of radioactive aerosol from covered pit due to jumper or pipe breach in Tank 241-AY-102 distributor pit resulting in spray release from pit.	1. Pipe failure 2. Improper Assembly 3. Other operators change jumper hookup 4. Connector faults	F3	E1
W320-B-TRANS29	Release of radioactive aerosol from covered pit due to jumper or pipe breach in Tank 241-AY-102 pump pit resulting in spray release from pit.	1. Pipe failure 2. Improper Assembly 3. Other operators change jumper hookup 4. Connector faults	F3	E1
W320-B-TRANS30	Release of radioactive aerosol from covered pit due to jumper or pipe breach in Tank 241-C-106 pump pit resulting in spray release from pit.	1. Pipe failure 2. Improper Assembly 3. Other operators change jumper hookup 4. Connector faults	F3	E1
W320-B-TRANS31	Release of radioactive aerosol from covered pit due to jumper or pipe breach in Tank 241-C-106 sluice pit resulting in spray release from pit.	1. Pipe failure 2. Improper Assembly 3. Other operators change jumper hookup 4. Connector faults	F3	E1
W320-BCD-TRANS13	Release of energetic radioactive aerosol from transfer line due to blank flange left off flushing connection and 3 way valve left in flush position after flushing. Cover plug remains in place on initiation of sluicing process. High capacity drain cover left on and pit overflows.	1. Maintenance error 2. Communications error between different groups using the pit	F3	E1
W320-D-ALL01	Release of low energy radioactive aerosol through failed filters from Tank 241-AY-102 due to a steam bump	1. Human error 2. Communications error with other workers using the tank 3. IOSRs require activation of ALCs in event temperature above limit	F3	E1

Table C-2. Hazardous Conditions With Potential Significant Onsite Consequences (S2). (11 sheets)

ID	Hazardous Condition	Cause	Initial Freq NC	Env Cons
W320-D-VENT07	Release of low energy radioactive aerosol from Tank 241-C-105/Tank 241-C-106 ventilation system due to failure to determine ventilation leak during sluicing.	1. Ducting corrosion 2. Seal deterioration	F3	E1
W320-D-VENT08	Release of low energy radioactive aerosol from largely intact tank due to excessive vacuum in Tank 241-C-106 from new ventilation system which results in loop seal failure and unfiltered release.	1. Operator error 2. Communications error	F3	E1
W320-D-VENT11	Release of low energy radioactive aerosol from largely intact tank due to excessive vacuum in Tank 241-C-106 from current ventilation system which results in loop seal failure and unfiltered release.	1. Operator error 2. Communications error	F3	E1
W320-BCD-FLUSH03*	Personnel exposure to ionizing radiation from flush tank of transfer truck due to start of submersible pump in Tank 241-C-106 during the flush of slurry transfer line. Flush tank is filled with radioactive material.	1. Operator Error 2. Failure in submersible pump circuitry	F3	E0
W320-ABCD-ALL05	Release of liquid waste below grade and aerosol release to atmosphere due to water intrusion into Tank 241-C-106 with water level exceeding maximum operating level resulting in leakage into liner gap, steam formation, breaching of tank bottom and steam bump.	1. Raw water leak 2. Surface water flood 3. Vent system water inleakage 4. Excessive transfer from Tank 241-AY-102 5. Water intrusion in Tank 241-C-105 that cascades over to Tank 241-C-106	F2	E2
W320-ABCD-TRANS02	Release of liquid waste below grade and aerosol release to atmosphere due to loss of sluicer arm control in Tank 241-C-106 resulting in jet striking tank liner with liner being breached, water leakage into liner gap, steam formation, breaching of tank bottom and steam bump.	1. Unavoidable operator action	F2	E2
W320-ABCD-TRANS05	Release of liquid waste below grade and aerosol release to atmosphere due to sluicer hose break in Tank 241-C-106 resulting in jet striking tank liner with liner being breached, water leakage into liner gap, steam formation, and breaching of tank bottom.	1. Primary failure of Hose 2. Severe Water hammer 3. Fatigue from vibration	F2	E2
W320-ABCD-TRANS07	Release of liquid waste below grade and aerosol release to atmosphere due to sluicer flow being excessive in Tank 241-C-106 resulting in jet striking tank liner with liner being breached, water leakage under tank bottom, steam formation, breaching of tank bottom and large steam bump.	1. Sluice flow control fault 2. Operator error	F2	E2
W320-ABCD-TRANS08	Release of liquid waste below grade and aerosol release to atmosphere due to sluicer flow excessive into Tank 241-C-106 with water level exceeding maximum operating level resulting in leakage into liner gap, steam formation, breaching of tank bottom and large steam bump.	1. Sluice flow control fault 2. Operator error	F2	E2
W320-BCD-ALL08	Release of liquid waste below grade and aerosol release to atmosphere due to excessive corrosion because of waste disturbance in Tank 241-C-106 resulting in leakage into liner gap, steam formation, breaching of tank bottom and steam bump.	1. Inadequate prediction of waste behavior	F2	E2

Table C-2. Hazardous Conditions With Potential Significant Onsite Consequences (S2). (11 sheets)

ID	Hazardous Condition	Cause	Initial Freq NC	Env Cons
W320-BCD-TRANS09	Release of liquid waste below grade and aerosol release to atmosphere due to loss of pumping from Tank 241-C-106 and continued pumping of Tank 241-AY-102 water exceeds maximum operating level resulting in water leakage into liner gap, steam formation, breaching of tank bottom and large steam bump.	1. Loss of power 2. Equipment casualty	F2	E2
W320-D-ALL09	Release of liquid waste below grade and aerosol release to atmosphere due to seismic event Tank 241-C-106 liner is breached resulting in water leakage into liner gap, steam formation, breaching of tank bottom and large steam bump.	1. Natural Phenomena	F2	E2
W320-D-TRANS09	Release of liquid waste below grade and aerosol release to atmosphere due to movement of debris during sluicing which impacts and breaches the Tank 241-C-106 liner, resulting in water leakage into liner gap, steam formation, breaching of tank bottom and steam bump.	1. Expected outcome of high pressure sluice. Many objects are in the waste.	F2	E2
W320-A-TRANS01	Release of low energy radioactive aerosol through failed filters from Tank 241-C-106 due to a large steam bump	1. Flowmeters fault or out of calibration 2. Operator error in positioning Tank 241-C-106 pump 3. Inadvertent or accidental actuation of Tank 241-C-106 pump but not Tank 241-AY-102 pump 4. ENRAF level indication fault 5. Pump controller fault 6. Tank 241-C-106 T/C fault	F2	E1
W320-ABCD-CHILL01	Release of low energy radioactive aerosol from largely intact tank due to excessive cooling from process chiller and vacuum in Tank 241-C-106 from ventilation system which results in excedance of loop seal vacuum and unfiltered release.	1. Chiller control fault 2. High humidity	F2	E1
W320-ALL-TRANS01	Release of low energy radioactive aerosol through failed filters from Tank 241-AY-102 due to moisture buildup on ventilation system HEPA filters	1. Natural occurrence under proper conditions	F2	E1
W320-ALL-TRANS02	Release of small high energy aerosolized waste due to high winds or tornado resulting in failed ventilation ducting and unfiltered release.	1. Natural occurrence under proper conditions	F2	E1
W320-B-ALL11	Release of liquid waste due to large water intrusion into Tank 241-C-106 resulting in high hydrostatic pressure and tank breach.	1. Raw water leak 2. Surface water flood 3. Vent system water inleakage 4. Excessive transfer from Tank 241-AY-102 5. Water intrusion in Tank 241-C-105 that cascades over to Tank 241-C-106	F2	E1
W320-B-FLUSH06	Release of radioactive liquid from transfer line due to a pipe break in 241-AY-102 pit with the high capacity drain cover on resulting in overflow of pit onto the ground.	1. Equipment failure 2. Maintenance or assembly error	F2	E1
W320-B-FLUSH07	Release of radioactive liquid from transfer line due to pipe break in pit during flushing and drain plug cover on resulting in overflow of pit onto the ground.	1. Equipment failure 2. Maintenance or assembly error	F2	E1

Table C-2. Hazardous Conditions With Potential Significant Onsite Consequences (S2). (11 sheets)

ID	Hazardous Condition	Cause	Initial Freq NC	Env Cons
W320-B-TRANS06	Release of low energy radioactive aerosol from largely intact Tank 241-AY-102 due to excessive slurry flow resulting in increased aerosol generation and errant flow release.	1. 3-way ball valve in flushing system not fully open 2. Pump controller fault	F2	E1
W320-B-TRANS07	Release of low energy radioactive aerosol from largely intact Tank 241-AY-102 due to startup of slurry flow to distributor resulting in air being bubbled through waste and release of vapor.	1. Normal procedure	F2	E1
W320-B-TRANS11	Release of low energy radioactive aerosol from largely intact Tank 241-AY-102 due to excessive corrosion and heat loading from new waste.	1. Inadequate prediction of waste behavior	F2	E1
W320-B-TRANS12	Release of low energy radioactive aerosol from interconnected tanks due to increased heat loading of Tank 241-AY-102 and loss of vacuum.	1. Inadequate prediction of waste behavior 2. Existing system cannot control flow rates from different tanks. Depends on inleakage 3. W030 system has lower exhaust capabilities	F2	E1
W320-B-TRANS13	Small low energy aerosolized waste release from largely intact tank due to flammable gas collecting in a Tank 241-AY-102 pit where it is ignited resulting in the cover blocks being displaced and falling into pit. Cover block strikes riser-liner joint resulting in an unfiltered release from dome space.	1. Chimney through deep drop legs 2. 6 in. high capacity drain to dome space 3. Pit sealed to minimize inleakage	F2	E1
W320-B-VENT03	Release of low energy radioactive aerosol from breached Tank 241-AY-102 due to ice storm which prevents air inflow through W030 ventilation upgrade and results in excessive vacuum.	1. Natural phenomena	F2	E1
W320-B-VENT04	Release of low energy radioactive aerosol from breached Tank 241-AY-102 due to ice storm which prevents air inflow through existing exhaust system with W030 intake and results in excessive vacuum.	1. Natural phenomena	F2	E1
W320-B-VENT06	Release of low energy radioactive aerosol from breached Tank 241-AY-102 due to ice storm which prevents air inflow through existing ventilation system and results in excessive vacuum.	1. Natural phenomena	F2	E1
W320-BCD-TRANS10	Release of radioactive liquid release from sluice transfer line due to the blank flange being left off flushing connection in Tank 241-AY-102 pit and drain cover left on resulting in overflow of pit onto the ground during sluicing.	1. Maintenance error 2. Communications error between different groups using the pit	F2	E1
W320-D-ALL05	Release of low energy radioactive aerosol through failed filters from Tank 241-AY-102 due to long term loss of ventilation system resulting in tank bump and blowout of filters.	1. Loss of power 2. Equipment casualty	F2	E1
W320-D-TRANS02	Release of low energy radioactive aerosol from largely intact Tank 241-C-106 due to excessive sluicer flow which results in radioactive air release through HEPAs.	1. Natural outcome if conditions are met	F2	E1
W320-D-TRANS03	Release of low energy radioactive aerosol from largely intact Tank 241-C-106 due to sluicer moving debris impacting drop leg in tank which breaches dome.	1. Expected outcome of high velocity sluicing Many objects are in the waste	F2	E1

Table C-2. Hazardous Conditions With Potential Significant Onsite Consequences (S2). (11 sheets)

ID	Hazardous Condition	Cause	Initial Freq NC	Env Cons
W320-D-TRANS04	Release of low energy radioactive aerosol from largely intact Tank 241-C-106 due to high temperature sluice water which increases head space pressure with increased errant flow.	1. High temperature in Tank 241-AY-102	F2	E1
W320-D-VENT03	Release of low energy radioactive aerosol through failed filters in the 702A ventilation system of Tank 241-AY-102 due to severe ice storm, excessive tank vacuum and resulting tank bump	1. Natural phenomena	F2	E1
W320-D-VENT05	Release of low energy radioactive aerosol through failed filters in the W030 ventilation system due to severe ice storm, excessive tank vacuum and resulting tank bump.	1. Natural phenomena	F2	E1
W320-D-VENT15	Small low energy radioactive aerosolized waste release from standpipes in Tank 241-AY-102 due to flammable gas buildup where it is ignited resulting in the pipe being breached resulting in an unfiltered release.	1. Natural occurrence under proper conditions	F2	E1
W320-B-TERM01	Release of toxic ammonia gas from tank due to burp which exposes facility personnel to toxic gases.	1. Inadequate prediction of waste behavior	F2	E0
W320-ABCD-CHILL02	Release of energetic radioactive aerosol from covered pit or deadend pipe due to propylene glycol spray leak into ventilation system of Tank 241-C-106 with ignition propagating into tank dome.	1. Piping or tubing leak	F1	E2
W320-ABCD-TRANS03	Release of liquid waste below grade and aerosol release to atmosphere due to siphoning of waste from Tank 241-AY-102 after the stoppage of pumping water exceeds maximum operating level in Tank 241-C-106 resulting in water leakage into liner gap, steam formation, breaching of tank bottom and large steam bump.	1. Buildup of solids in openings 2. Equipment casualty	F1	E2
W320-ABCD-TRANS09	Release of liquid waste below grade and aerosol release to atmosphere due to excessive waste temperature change rate Tank 241-C-106 liner breaches, resulting in water leakage under tank bottom, steam formation, breaching of tank bottom and large steam bump.	1. High temperature in Tank 241-AY-102	F1	E2
W320-ALL-VENT01	Release of energetic radioactive aerosol from breached ventilation duct for Tank 241-AY-102 due to a buildup of ammonium nitrate in ventilation ducting and ignition via hot work, range fire etc.	1. Natural occurrence under proper conditions	F1	E2
W320-BCD-ALL07	Release of liquid waste below grade and aerosol release to atmosphere due to water intrusion into Tank 241-C-105 which travels through cascade line into Tank 241-C-106 with water level exceeding maximum operating level resulting in leakage into liner gap, steam formation, bulging of tank bottom, ripping of liner and steam bump.	1. Raw water leak 2. Surface water flood	F1	E2
W320-BCD-PUMP05	Release of small high energy aerosol to atmosphere due to immersible pump being raised to high in Tank 241-C-106, motor breaks gear assembly, pump freespools into waste resulting in a flammable gas release which is ignited by broken electrical cables, plume burn.	1. Operator error in positioning direction 2. Inadvertent or accidental actuation 3. Winch controller fault	F1	E2

Table C-2. Hazardous Conditions With Potential Significant Onsite Consequences (S2). (11 sheets)

ID	Hazardous Condition	Cause	Initial Freq NC	Env Cons
W320-D-ALL06	Release of a small amount of low energy aerosolized waste through failed filters due to seismic event which induces a steam bump in Tank 241-AY-102, and failure of filters or ducting.	1. Natural Phenomena	F1	E2
W320-F-TERM05	Release of liquid waste below grade and aerosol release to atmosphere due to high heat load after completion of sluicing process resulting in the need for water addition to Tank 241-C-106 with a deteriorated tank liner, water leakage into liner gap, steam formation, liner breach and steam bump.	1. Error in calculations	F1	E2
W320-B-ALL13	Release of radioactive liquid from Tank 241-AY-102 due to large water intrusion into tank	1. Raw water leak 2. Surface water flood 3. Vent system water inleakage	F1	E1
W320-B-ALL14	Release of small low energy aerosolized waste to the atmosphere from intact pit due to high winds/dust devils during plug removal from pit cover.	1. High winds	F1	E1
W320-B-TRANS02	Release of low energy radioactive aerosol through failed filters from Tank 241-AY-102 due to low slurry flow, piling of waste at base of distributor and resulting tank bump	1. 3-way ball valve in flushing system not fully open 2. Pump controller fault 3. Excessive solids in sluicing flow	F1	E1
W320-B-TRANS04	Release of low energy radioactive aerosol through failed filters from Tank 241-C-106 due to high slurry transfer rate, high waste temperature and resulting tank bump	1. Flowmeters fault or out of calibration 2. Operator error in positioning Tank 241-C-106 pump 3. Inadvertent or accidental actuation of Tank 241-C-106 pump but not Tank 241-AY-102 pump 4. ENRAF level indication fault 5. Pump controller fault 6. Tank 241-C-106 T/C fault	F1	E1
W320-B-TRANS05	Release of low energy radioactive aerosol from largely intact Tank 241-AY-102 due to buildup of solids pile under distributor as a result of low slurry flow which results in steam bump and increased head space vapor pressure.	1. 3-way ball valve in flushing system not fully open 2. Pump controller fault 3. Excessive solids in sluicing flow	F1	E1
W320-B-TRANS08	Release of low energy radioactive aerosol from largely intact Tank 241-AY-102 due to distributor breaking off which results in excessive aerosol generated in head space and release through HEPAs.	1. Primary failure of distributor 2. Severe Water hammer 3. Severe thermal shock 4. Corrosion 5. Metal fatigue from vibration	F1	E1
W320-B-TRANS09	Release of low energy radioactive aerosol from largely intact Tank 241-AY-102 due to buildup of solids pile under distributor as a result of the distributor nozzle breaking off which results in steam bump and increased head space vapor pressure.	1. Primary failure of distributor 2. Severe water hammer 3. Severe thermal shock 4. Corrosion 5. Metal fatigue from vibration	F1	E1
W320-B-TRANS10	Release of low energy radioactive aerosol from largely intact Tank 241-AY-102 due to distributor breaking off which results in excessive aerosol generated in head space and release through HEPAs.	1. Primary failure of sluicer 2. Severe Water hammer 3. Severe thermal shock 4. Corrosion 5. Metal fatigue from vibration	F1	E1

Table C-2. Hazardous Conditions With Potential Significant Onsite Consequences (S2). (11 sheets)

ID	Hazardous Condition	Cause	Initial Freq NC	Env Cons
W320-B-VENT07	Release of low energy radioactive aerosol from largely intact tank due to volcanic ashfall preventing air inflow into Tank 241-AY-102 through existing ventilation system resulting in tank breach.	1. Natural phenomena	F1	E1
W320-BCD-ALL01	Release of energetic radioactive aerosol from covered pit on Tank 241-C-106 due to propylene glycol leak into pit with ignition.	1. Piping or tubing leak	F1	E1
W320-BCD-ALL04	Release of low energy radioactive aerosol from largely intact Tank 241-C-106 due to fan controller failure resulting in excessive vacuum in tank and loop seal actuation.	1. Rotameter valve to controller fault 2. Operator error in adjusting rotameter or inadvertent adjustment	F1	E1
W320-BCD-ALL05	Small high energy aerosolized waste release to the atmosphere due to buildup of solids and flammable gas in transfer line . Gas is then ignited resulting in a breach of transfer line. Pumping is started without knowledge of breach.	1. Low flow 2. Inadequate flushing	F1	E1
W320-BCD-ALL06	Small high energy aerosolized waste release to the atmosphere due to buildup of solids and flammable gas in transfer line . Gas is then ignited and detonates resulting in a breach of transfer line. Pumping is started without knowledge of breach.	1. Low flow 2. Inadequate flushing	F1	E1
W320-BCD-ALL10	Small high energy aerosolized waste release to the atmosphere due to plugging and buildup of flammable gas in transfer line . Gas is then ignited resulting in a breach of transfer line. Pumping is started without knowledge of breach.	1. Low flow 2. Inadequate flushing	F1	E1
W320-BCD-TRANS01	Release of ionizing radiation and radioactive gas from Tank 241-C-106 due to a criticality event in the tank pump vortices	1. Natural occurrence if conditions are met	F1	E1
W320-BCD-TRANS04	Release of ionizing radiation and radioactive gas from Tank 241-C-106 due to a criticality event in the tank during sluicing	1. Natural occurrence if conditions are met	F1	E1
W320-BCD-TRANS08	Release of low energy radioactive aerosol through failed filters from Tank 241-C-106 due to undetected high waste temperature and resulting tank bump	1. Expected outcome of high pressure sluice. Many objects are in the waste.	F1	E1
W320-D-ALL02	Release of low energy radioactive aerosol through failed filters from Tank 241-AY-102 due to barometric pressure change, high waste temperature and resulting tank bump	1. Ventilation balance upset 2. Sudden barometric pressure change 3. Low intensity seismic event	F1	E1
W320-D-TERM01	Release of ionizing radiation and radioactive gas from Tank 241-AY-102 due to a criticality event in the tank	1. Natural occurrence if conditions are met	F1	E1
W320-D-TRANS01	Release of low energy radioactive aerosol through failed filters from Tank 241-AY-102 due to rapid waste level change, high waste temperature and resulting tank bump	1. Flowmeters fault or out of calibration 2. Operator error in positioning Tank 241-AY-102 pump 3. Inadvertent or accidental actuation of Tank 241-AY-102 pump but not Tank 241-C-106 pump 4. ENRAF level indication fault 5. Pump controller fault	F1	E1

Table C-2. Hazardous Conditions With Potential Significant Onsite Consequences (S2). (11 sheets)

ID	Hazardous Condition	Cause	Initial Freq NC	Env Cons
W320-D-TRANS08	Release of low energy radioactive aerosol through failed filters due to excessive fluffing of waste in Tank 241-AY-102 resulting in large steam bump and unfiltered release.	1. Inadequate prediction of waste behavior	F1	E1
W320-D-VENT01	Release of energetic radioactive aerosol from filter breach due to a buildup of ammonium nitrate in ventilation ducting of Tank 241-AY-102 and ignition via hot work, range fire etc.	1. Natural occurrence under proper conditions	F1	E1
W320-D-VENT04	Release of small low energy radioactive aerosol through failed filters from Tank 241-AY-102 due to cold water spray into tank, tank vacuum and resulting tank bump	1. Possible result of slurry distribution	F1	E1
W320-D-VENT09	Release of low energy radioactive aerosol from largely intact Tank 241-AY-102 due to loss of primary or annulus ventilation which results in steam release.	1. Extended loss of power 2. Severe ventilation casualty	F1	E1
W320-E-TERM01	Release of large high energy radioactive aerosol from Tank 241-AY-102 due to excessive fluffing of waste which results in tank structural damage and unfiltered release.	1. Inadequate prediction of waste behavior	F1	E1
W320-A-TRANS04	Release of large high energy aerosolized waste from Tank 241-C-106 due to high waste temperature during slurry transfer which results in a steam bump. Bump induces flammable gas release which is ignited resulting in a dome burn.	1. Flowmeters fault or out of calibration 2. Operator error in positioning Tank 241-C-106 pump 3. Inadvertent or accidental actuation of Tank 241-C-106 pump but not Tank 241-AY-102 pump 4. ENRAF level indication fault 5. Pump controller fault 6. Tank 241-C-106 T/C fault	F0	E2
W320-ABCD-TRANS06	Release of liquid waste below grade and aerosol release to atmosphere due to sluicing arm breaking off and penetrating Tank 241-C-106 liner resulting in water leakage into liner gap, steam formation, liner breach and steam bump.	1. Primary failure of sluicer 2. Severe Water hammer 3. Severe thermal shock 4. Corrosion 5. Metal fatigue from vibration	F0	E2
W320-B-FLUSH01	Release of energetic radioactive aerosol from damaged Tank 241-C-106 single shell tank due to ignition of flammable gas plume and resulting filter breach induced by large water intrusion into tank.	1. Maintenance error 2. Communications error between different groups using the pit	F0	E2
W320-B-TRANS17	Release of high energy aerosolized waste from damaged Tank 241-C-106 due to the sluicer hose breaking which then impinges into the solids releasing a region of retained flammable gas. The gas is then ignited and a plume fire results.	1. Primary failure of Hose 2. Severe Water hammer 3. Severe thermal shock 4. Corrosion 5. Fatigue from vibration	F0	E2
W320-B-TRANS18	Release of large high energy aerosolized waste to the atmosphere due to sluice water transfer rate being excessive resulting in the Tank 241-C-106 waste level being lowered quickly with the waste temperature to high. This results in a large steam bump and flammable gas release with a plume burn.	1. Flowmeters fault or out of calibration 2. Operator error in positioning Tank 241-C-106 pump 3. Inadvertent or accidental actuation of Tank 241-C-106 pump but not Tank 241-AY-102 pump 4. ENRAF level indication fault 5. Pump controller fault 6. Tank 241-C-106 T/C fault	F0	E2

Table C-2. Hazardous Conditions With Potential Significant Onsite Consequences (S2). (11 sheets)

ID	Hazardous Condition	Cause	Initial Freq NC	Env Cons
W320-BCD-PUMP03	Release of small high energy aerosol to atmosphere due to immersible pump being raised to high in Tank 241-AY-102, winch lifting strap breaking, pump falling into waste results in a flammable gas release which is ignited by broken electrical cables, plume burn.	1. Operator error in positioning direction 2. Inadvertent or accidental actuation 3. Winch controller fault	F0	E2
W320-BCD-PUMP08	Release of liquid waste below grade and aerosol release to atmosphere due to submersible pump being raised to high, winch lifting strap breaking, pump falling and penetrating Tank 241-C-106 liner resulting in water leakage into liner gap, steam formation, liner bulges/rips and steam bump occurs.	1. Operator error in positioning direction 2. Inadvertent or accidental actuation 3. Winch controller fault	F0	E2
W320-BCD-PUMP09	Release of large high energy aerosolized waste to atmosphere due to immersible pump being raised to high in Tank 241-C-106, winch lifting strap breaking, pump falling into waste results in a flammable gas release which is ignited by broken electrical cables, plume burn.	1. Operator error in positioning direction 2. Inadvertent or accidental actuation 3. Winch controller fault	F0	E2
W320-D-TRANS06	Release of large high energy aerosolized waste to the atmosphere due to slurry transfer rate being excessive resulting in a rapid reduction in the hydrostatic pressure in Tank 241-C-106. This results in a flammable gas release. Gas is ignited and a dome space fire results.	1. Sluice flow control fault	F0	E2
W320-A-TRANS02	Release of low energy radioactive aerosol through failed filters from Tank 241-AY-102 due to lowering of tank level with temperature out of spec resulting in tank bump	1. Flowmeters fault or out of calibration 2. Operator error in positioning Tank 241-C-106 pump 3. ENRAF level indication fault 4. Pump controller fault 5. Tank 241-C-106 T/C fault	F0	E1
W320-B-FLUSH02	Release of low energy radioactive aerosol through failed filters due to a large steam bump in Tank 241-C-106 as a result of high tank vacuum resulting from flushing water spray condensing dome vapors.	1. Planned	F0	E1
W320-B-FLUSH03	Release of low energy radioactive aerosol through failed filters of Tank 241-AY-102 due to a large steam bump as a result of high tank vacuum due to high condensation rate in tank from flushing water spray through antisiphon holes.	1. Planned	F0	E1
W320-B-FLUSH05	Release of low energy radioactive aerosol from largely intact Tank 241-AY-102 due to flushing water spray through antisiphon holes resulting in excessive vacuum in tank and tank breach.	1. Planned	F0	E1
W320-B-PUMP01	Release of low energy radioactive aerosol from Tank 241-AY-102 through failed filters due to overheating of waste and subsequent steam bump	1. Mass flowmeter fault or out of calibration 2. Operator error in positioning 3. Inadvertent or accidental repositioning 4. Level indication fault 5. Waste level indicator on pump fault 6. Pump controller fault	F0	E1

Table C-2. Hazardous Conditions With Potential Significant Onsite Consequences (S2). (11 sheets)

ID	Hazardous Condition	Cause	Initial Freq NC	Env Cons
W320-B-TRANS01	Release of small low energy aerosolized waste from the annulus of Tank 241-AY-102 due to steam pulses from boiling waste in annulus region which results in the failure of annulus filters. Waste leaks into annulus due to corrosion of primary tank from new waste composition.	1. Inadequate prediction of waste behavior	F0	E1
W320-B-TRANS03	Release of low energy radioactive aerosol through failed filters due to condensation of vapor in head space of Tank 241-C-106 which resulted from the breaking off of sluicer head.	1. Primary failure of sluicer 2. Severe Water hammer 3. Severe thermal shock 4. Corrosion 5. Metal fatigue from vibration	F0	E1
W320-B-VENT01	Release of low energy radioactive aerosol from largely intact Tank 241-AY-102 due to volcanic ashfall which prevents air intake through existing ventilation system with W030 intake resulting in excessive vacuum and tank breach.	1. Natural phenomena	F0	E1
W320-B-VENT02	Release of low energy radioactive aerosol from largely intact Tank 241-AY-102 due to volcanic ashfall which prevents air intake through W030 ventilation upgrade system resulting in excessive vacuum and tank breach.	1. Natural phenomena	F0	E1
W320-B-VENT05	Release of low energy radioactive aerosol from largely intact Tank 241-AY-102 due to cold water spray into tank which results in excessive vacuum and tank breach.	1. Possible result of slurry distribution	F0	E1
W320-BCD-TRANS02	Release of ionizing radiation and radioactive gas from Tank 241-C-106 due to a criticality event in the tank	1. Flushing valve misposition 2. Pump controller fault 3. Excessive solids in slurry flow	F0	E1
W320-BCD-TRANS03	Release of ionizing radiation and radioactive gas from Tank 241-C-106 due to a criticality event in the tank	1. Primary failure of distributor 2. Severe water hammer 3. Severe thermal shock 4. Corrosion 5. Metal fatigue from vibration	F0	E1
W320-BCD-TRANS05	Release of low energy radioactive aerosol through failed filters due to tank bump in Tank 241-AY-102 resulting from the vacuum developed in the head space from the condensation of vapor which resulted from the breaking off of distributor head.	1. Primary failure of distributor 2. Severe Water hammer 3. Severe thermal shock 4. Corrosion 5. Metal fatigue from vibration	F0	E1
W320-BCD-TRANS06	Release of low energy radioactive aerosol through failed filters of Tank 241-AY-102 due to tank bump resulting from the which resulted from the breaking off of distributor head.	1. Primary failure of distributor 2. Severe water hammer 3. Severe thermal shock 4. Corrosion 5. Metal fatigue from vibration	F0	E1
W320-BCD-TRANS07	Release of low energy radioactive aerosol through failed filters of Tank 241-C-106 due to failure of T/C Tree, sluicing outside of temperature specs, atmospheric change, and large steam bump resulting in filter breach.	1. Sluice flow control fault 2. Operator error	F0	E1
W320-D-ALL03	Release of low energy radioactive aerosol from Tank 241-AY-102 through failed filters due to bump in interconnected tank resulting in a tank bump and filter breach.	1. Ventilation balance upset 2. Sudden barometric pressure change 3. Low intensity seismic event	F0	E1

Table C-2. Hazardous Conditions With Potential Significant Onsite Consequences (S2). (11 sheets)

ID	Hazardous Condition	Cause	Initial Freq NC	Env Cons
W320-D-ALL04	Release of low energy radioactive aerosol from Tank 241-AY-102 through failed filters due to bump in interconnected tank resulting in a tank bump and filter breach.	1. Ventilation balance upset 2. Sudden barometric pressure change 3. Low intensity seismic event	F0	E1
W320-D-PURGE01	Release of low energy aerosolized waste from largely intact Tank 241-C-106 due to nitrogen line break and loss of vacuum.	1. Tube failure 2. Improper Assembly 3. Regulator fault	F0	E1
W320-D-VENT02	Release of low energy radioactive aerosol from 241-AY-102 through failed filters due to inadequate ventilation from W030 resulting in increased waste temperature, steam bump and filter breach.	1. Error in calculations 2. Design error 3. Construction fault	F0	E1
W320-D-VENT06	Release of low energy radioactive aerosol from Tank 241-AY-102 through failed filters due to volcanic ashfall , excessive vacuum resulting in large steam bump and filter blowout.	1. Natural phenomena	F0	E1
W320-D-VENT14	Small high energy aerosolized waste release from Tank 241-AY-102 to the atmosphere due to the loss of primary or annulus ventilation for an extended period which results in a gradual rise in waste temperature. Flammable gas leaks into annulus. It is then ignited resulting in the annulus being breached.	1. Extended loss of power 2. Severe ventilation casualty	F0	E1
W320-D-VENT19	Release of low energy radioactive aerosol through failed filters due to loss of primary or annulus ventilation for extended period of time resulting in rise in waste temperature and large bump in Tank 241-AY-102.	1. Extended loss of power 2. Severe ventilation casualty	F0	E1

ALC = air lift circulator
IOSR = Interim Operational Safety Requirements

Table C-3. Hazardous Conditions With Potential Significant Worker Consequences (S1).

ID	Hazardous Condition	Cause	Initial Freq NC	Env Cons
W320-ABCD-TRANS14	Personnel exposure to Ionizing radiation due to flooding which uncovers transfer lines.	1. Raw water line rupture 2. Natural flooding	F2	E0
W320-ABCD-TRANS16	Personnel exposure to Ionizing radiation due to excavation which uncovers transfer lines.	1. Mistake in excavation location 2. Failure to determine transfer line location	F1	E0
W320-ABCD-VENT01	Release of toxic gas from Tank 241-AY-102 due to failure of ventilation system and gradual rise in waste temperature resulting in toxic gas release from tank and to workers.	1. Loss of power 2. Equipment casualty	F1	E0
W320-D-VENT10	Release of toxic gas from Tank 241-AY-102 due to inadequate ventilation from W030 which results in high waste temperature , increased toxic gas release and facility worker inhalation of toxic gases.	1. Error in calculations 2. Design error 3. Construction fault	F1	E0
W320-E-TERM02	Release of toxic hydrogen cyanide gas from Tank 241-AY-102 due to burp	1. Inadequate prediction of waste behavior	F1	E0
W320-ABCD-TRANS15	Personnel exposure to Ionizing radiation due to high winds which uncovers transfer lines.	1. Natural phenomena	F0	E0

Table C-4. Hazardous Conditions with Potential Severe Environmental Consequences (E2 and E3). (9 sheets)

ID	Hazardous Condition	Cause	Initial Freq NC	Env Cons
W320-B-ALL09	Release of energetic radioactive aerosol from damaged tank due to formation of organic layer in Tank 241-AY-102 during slurry distribution and subsequent ignition of organics.	1. Sluicing causes organic separation	F1	E3
W320-B-ALL10	Release of energetic radioactive aerosol from damaged tank due to formation of organic layer in Tank 241-C-106 during sluicing and subsequent ignition of organics.	1. Sluicing causes organic separation	F1	E3
W320-A-TRANS06	Release of energetic radioactive aerosol from damaged tank due to waste temperature being out of specification during start of slurry transfer in Tank 241-C-106 and subsequent ignition of organics.	1. Operator mistake 2. Temperature measurement fault	F0	E3
W320-B-VENT08	Release of energetic radioactive aerosol from damaged tank due to loss of Tank 241-C-106 ventilation for many months, dry out of waste and subsequent ignition of organics.	1. Loss of power 2. Equipment casualty	F0	E3
W320-B-VENT09*	Release of energetic radioactive aerosol from damaged tank due to loss of Tank 241-AY-102 ventilation for many months, dry out of waste and subsequent ignition of organics.	1. Loss of power 2. Equipment casualty	F0	E3
W320-D-CHILL01	Release of energetic radioactive aerosol from damaged tank due to a leak and ignition of propylene glycol from pit chiller into Tank 241-C-106.	1. Piping or tubing leak	F0	E3
W320-D-CHILL02	Release of energetic radioactive aerosol from damaged tank due to a leak and ignition of propylene glycol from ventilation chiller into Tank 241-C-106.	1. Piping or tubing leak	F0	E3
W320-ABCD-ALL04	Release of liquid waste below grade and aerosol release to atmosphere due to water intrusion into Tank 241-C-106 with water level exceeding maximum operating level resulting in leakage into liner gap, steam formation, breaching of tank bottom and steam bump.	1. Raw water leak 2. Surface water flood 3. Vent system water inleakage 4. Excessive transfer from Tank 241-AY-102 5. Water intrusion in Tank 241-C-105 that cascades over to Tank 241-C-106	F3	E2
W320-ABCD-TRANS01	Release of liquid waste due to sluicer nozzle jet being directed at and breaching Tank 241-C-106 wall resulting in water leaking into liner gap where steam vapor forms and breaches tank bottom.	1. Unavoidable operator action	F3	E2
W320-BCD-FLUSH01	Release of energetic radioactive aerosol from transfer line due to 3 way valve left in flush position after flushing. Cover plug is lifted out of cover block on initiation of sluicing process.	1. Maintenance error 2. Communications error between different groups using the pit	F3	E2
W320-BCD-FLUSH02*	Release of energetic radioactive aerosol from flush tank of transfer truck due to start of submersible pump in Tank 241-C-106 during the flush of slurry transfer line. Flush tank is filled and pressurized resulting in rupture of tank or transfer line.	1. Human error 2. Communications error between different groups	F3	E2
W320-BCD-TRANS11	Release of energetic radioactive aerosol from transfer line due to blank flange left off flushing connection in Tank 241-C-106 pit after flushing. Cover plug is lifted out of cover block on initiation of sluicing process.	1. Maintenance error 2. Communications error between different groups using the pit	F3	E2

Table C-4. Hazardous Conditions with Potential Severe Environmental Consequences (E2 and E3). (9 sheets)

ID	Hazardous Condition	Cause	Initial Freq NC	Env Cons
W320-BCD-TRANS12	Release of energetic radioactive aerosol from transfer line due to blank flange left off flushing connection in Tank 241-AY-102 pit after flushing. Cover plug is lifted out of cover block on initiation of sluicing process.	1. Maintenance error 2. Communications error between different groups using the pit	F3	E2
W320-ABCD-ALL05	Release of liquid waste below grade and aerosol release to atmosphere due to water intrusion into Tank 241-C-106 with water level exceeding maximum operating level resulting in leakage into liner gap, steam formation, breaching of tank bottom and steam bump.	1. Raw water leak 2. Surface water flood 3. Vent system water inleakage 4. Excessive transfer from Tank 241-AY-102 5. Water intrusion in Tank 241-C-105 that cascades over to Tank 241-C-106	F2	E2
W320-ABCD-TRANS02	Release of liquid waste below grade and aerosol release to atmosphere due to loss of sluicer arm control in Tank 241-C-106 resulting in jet striking tank liner with liner being breached, water leakage into liner gap, steam formation, breaching of tank bottom and steam bump.	1. Unavoidable operator action	F2	E2
W320-ABCD-TRANS05	Release of liquid waste below grade and aerosol release to atmosphere due to sluicer hose break in Tank 241-C-106 resulting in jet striking tank liner with liner being breached, water leakage into liner gap, steam formation, and breaching of tank bottom.	1. Primary failure of Hose 2. Severe Water hammer 3. Fatigue from vibration	F2	E2
W320-ABCD-TRANS07	Release of liquid waste below grade and aerosol release to atmosphere due to sluicer flow being excessive in Tank 241-C-106 resulting in jet striking tank liner with liner being breached, water leakage under tank bottom, steam formation, breaching of tank bottom and large steam bump.	1. Sluice flow control fault 2. Operator error	F2	E2
W320-ABCD-TRANS08	Release of liquid waste below grade and aerosol release to atmosphere due to sluicer flow excessive into Tank 241-C-106 with water level exceeding maximum operating level resulting in leakage into liner gap, steam formation, breaching of tank bottom and large steam bump.	1. Sluice flow control fault 2. Operator error	F2	E2
W320-ABCD-TRANS11	Release of energetic radioactive aerosol from transfer line in pit due to flammable gas collecting in pit and being ignited. Cover block lifted and falls onto piping in pit resulting in spray release.	1. Chimney through deep drop legs 2. 6 in. high capacity drain to dome space 3. Pit sealed to minimize inleakage	F2	E2
W320-ABCD-TRANS11	Release of energetic radioactive aerosol release from line break due to flammable gas ignition in pit with cover block falling onto piping.	1. Chimney through deep drop legs 2. 6 in. high capacity drain to dome space 3. Pit sealed to minimize inleakage	F2	E2
W320-ABCD-TRANS12	Release of energetic radioactive aerosol from line break due to pipe or jumper breach in distributor pit of Tank 241-AY-102 with cover block off during slurry transfer.	1. Pipe failure 2. Improper Assembly 3. Other operators change jumper hookup 4. Connector faults	F2	E2
W320-B-TRANS23	Release of energetic radioactive aerosol from line break due to pipe or jumper breach in pump pit of Tank 241-AY-102 with cover block off during sluicing.	1. Pipe failure 2. Improper Assembly 3. Other operators change jumper hookup 4. Connector faults	F2	E2

Table C-4. Hazardous Conditions with Potential Severe Environmental Consequences (E2 and E3). (9 sheets)

ID	Hazardous Condition	Cause	Initial Freq NC	Env Cons
W320-B-TRANS24	Release of energetic radioactive aerosol from line break due to pipe or jumper breach in pump pit of Tank 241-C-106 with cover block off.	1. Pipe failure 2. Improper Assembly 3. Other operators change jumper hookup 4. Connector faults	F2	E2
W320-B-TRANS25	Release of energetic radioactive aerosol from line break due to pipe or jumper breach in sluice pit of Tank 241-C-106 with cover block off.	1. Pipe failure 2. Improper Assembly 3. Other operators change jumper hookup 4. Connector faults	F2	E2
W320-B-TRANS26	Release of energetic radioactive aerosol from transfer line in Tank 241-C-106 pit due to flammable gas collecting in pit and being ignited. Cover block lifted and falls onto piping in pit resulting in spray release.	1. Chimney through deep drop legs 2. 6 in. high capacity drain to dome space 3. Pit sealed to minimize inleakage	F2	E2
W320-BCD-ALL08	Release of liquid waste below grade and aerosol release to atmosphere due to excessive corrosion because of waste disturbance in Tank 241-C-106 resulting in leakage into liner gap, steam formation, breaching of tank bottom and steam bump.	1. Inadequate prediction of waste behavior	F2	E2
W320-BCD-TRANS09	Release of liquid waste below grade and aerosol release to atmosphere due to loss of pumping from Tank 241-C-106 and continued pumping of Tank 241-AY-102 water exceeds maximum operating level resulting in water leakage into liner gap, steam formation, breaching of tank bottom and large steam bump.	1. Loss of power 2. Equipment casualty	F2	E2
W320-D-ALL07	Release of energetic radioactive aerosol from damaged double shell Tank 241-AY-102 due to seismic event which releases flammable gas from the waste and after shocks cause mechanical sparks which ignites the flammable gas mixture.	1. Natural Phenomena	F2	E2
W320-D-ALL09	Release of liquid waste below grade and aerosol release to atmosphere due to seismic event Tank 241-C-106 liner is breached resulting in water leakage into liner gap, steam formation, breaching of tank bottom and large steam bump.	1. Natural Phenomena	F2	E2
W320-D-TRANS09	Release of liquid waste below grade and aerosol release to atmosphere due to movement of debris during sluicing which impacts and breaches the Tank 241-C-106 liner, resulting in water leakage into liner gap, steam formation, breaching of tank bottom and steam bump.	1. Expected outcome of high pressure sluice. Many objects are in the waste.	F2	E2
W320-D-TRANS10	Release of energetic radioactive aerosol from jumper in pit due to seismic event. Cover block breached by ground motion resulting in spray release.	1. Natural Phenomena	F2	E2
W320-ABCD-ALL01	Release of energetic radioactive aerosol from damaged tank due to flooding on top of Tank 241-C-106 dome.	1. Raw water line rupture 2. Heavy rainfall	F1	E2
W320-ABCD-ALL02	Release of energetic radioactive aerosol from damaged tank due to flooding on top of Tank 241-AY-102 dome.	1. Raw water line rupture 2. Heavy rainfall	F1	E2

Table C-4. Hazardous Conditions with Potential Severe Environmental Consequences (E2 and E3). (9 sheets)

ID	Hazardous Condition	Cause	Initial Freq NC	Env Cons
W320-ABCD-ALL07	Release of radioactive liquid from Tank 241-C-106 onto the ground due to large water intrusion into tank.	1. Raw water leak 2. Surface water flood 3. Vent system water inleakage 4. Excessive transfer from Tank 241-AY-102 5. Water intrusion in Tank 241-C-105 that cascades over to Tank 241-C-106	F1	E2
W320-ABCD-ALL08*	Release of radioactive liquid from Tank 241-C-106 due to siphoning of waste from Tank 241-AY-102 into Tank 241-C-106	1. Plugging of antisiphon holes 2. Loss of electrical power to the pumps 3. Shutdown from operations	F1	E2
W320-ABCD-CHILL02	Release of energetic radioactive aerosol from covered pit or deadend pipe due to propylene glycol spray leak into ventilation system of Tank 241-C-106 with ignition propagating into tank dome.	1. Piping or tubing leak	F1	E2
W320-ABCD-CHILL03	Release of energetic radioactive aerosol from collapsed Tank 241-C-106 due to excessive cooling from process chiller which restricts inflow and loop seal fails to operate.	1. Chiller control fault 2. High humidity	F1	E2
W320-ABCD-TRANS03	Release of liquid waste below grade and aerosol release to atmosphere due to siphoning of waste from Tank 241-AY-102 after the stoppage of pumping water exceeds maximum operating level in Tank 241-C-106 resulting in water leakage into liner gap, steam formation, breaching of tank bottom and large steam bump.	1. Buildup of solids in openings 2. Equipment casualty	F1	E2
W320-ABCD-TRANS09	Release of liquid waste below grade and aerosol release to atmosphere due to excessive waste temperature change rate Tank 241-C-106 liner breaches, resulting in water leakage under tank bottom, steam formation, breaching of tank bottom and large steam bump.	1. High temperature in Tank 241-AY-102	F1	E2
W320-ABCDF-ALL01*	Release of energetic radioactive aerosol to atmosphere due to buildup of flammable gas in Tank 241-AY-102 pit drain pipe which is then ignited.	1. Flammable gas generation from tank waste 2. 3.	F1	E2
W320-ALL-VENT01	Release of energetic radioactive aerosol from breached ventilation duct for Tank 241-AY-102 due to a buildup of ammonium nitrate in ventilation ducting and ignition via hot work, range fire etc.	1. Natural occurrence under proper conditions	F1	E2
W320-B-FLUSH04	Release of low energy radioactive aerosol from breached Tank 241-C-106 due to flushing water spray through sluice nozzle resulting in excessive tank vacuum.	1. Planned	F1	E2
W320-B-TRANS27	Release of energetic radioactive aerosol from transfer line in pit due to flammable gas collecting in pit and being ignited. Cover block lifted and falls onto piping in pit resulting in spray release.	1. Chimney through deep drop legs 2. 6 in. high capacity drain to dome space 3. Pit sealed to minimize inleakage	F1	E2
W320-B-TRANS32	Release of large high energy aerosolized radioactive waste from a spray leak from transfer line break due to aircraft strike on underground transfer line berm.	1. Light aircraft crash	F1	E2

Table C-4. Hazardous Conditions with Potential Severe Environmental Consequences (E2 and E3). (9 sheets)

ID	Hazardous Condition	Cause	Initial Freq NC	Env Cons
W320-BCD-ALL03	Release of energetic radioactive aerosol from damaged Tank 241-C-106 due to excessive vacuum resulting from ventilation system fan overspeed and failure of tank loop seal failure.	1. Rotameter valve to controller fault 2. Operator error in adjusting rotameter or inadvertent adjustment	F1	E2
W320-BCD-ALL07	Release of liquid waste below grade and aerosol release to atmosphere due to water intrusion into Tank 241-C-105 which travels through cascade line into Tank 241-C-106 with water level exceeding maximum operating level resulting in leakage into liner gap, steam formation, bulging of tank bottom, ripping of liner and steam bump.	1. Raw water leak 2. Surface water flood	F1	E2
W320-BCD-PUMP05	Release of small high energy aerosol to atmosphere due to immersible pump being raised to high in Tank 241-C-106, motor breaks gear assembly, pump freespools into waste resulting in a flammable gas release which is ignited by broken electrical cables, plume burn.	1. Operator error in positioning direction 2. Inadvertent or accidental actuation 3. Winch controller fault	F1	E2
W320-D-ALL06	Release of a small amount of low energy aerosolized waste through failed filters due to seismic event which induces a steam bump in Tank 241-AY-102, and failure of filters or ducting.	1. Natural Phenomena	F1	E2
W320-D-ALL08	Release of energetic radioactive aerosol to atmosphere due to start of air lift circulators in Tank 241-AY-102 resulting in a release of flammable gas plume which is then ignited.	1. Human error 2. Communications error with other workers using the tank 3. IOSRs require activation of ALCs in event temperature above limit	F1	E2
W320-D-PUMP01	Release of energetic radioactive aerosol from line break in Tank 241-AY-102 transfer pit due to immersible pump being positioned to high resulting in air entrainment in transfer line. Booster pump torques in reaction to air in transfer line and jumper connectors break. Cover block is off.	1. Operator error in positioning 2. Inadvertent or accidental repositioning 3. Level indication fault 4. Waste level indicator on pump fault	F1	E2
W320-D-PUMP03	Release of energetic radioactive aerosol from line break in Tank 241-C-106 transfer pit due to immersible pump being positioned to high resulting in air entrainment in transfer line. Booster pump torques in reaction to air in transfer line and jumper connectors break. Cover block is off.	1. Operator error in positioning 2. Inadvertent or accidental repositioning 3. Level indication fault 4. Waste level indicator on pump fault	F1	E2
W320-D-TRANS05	Release of energetic radioactive aerosol to atmosphere due to head space gas concentration above LFL in Tank 241-AY-102 with the start of pumping which ignites the flammable gas.	1. Spontaneous GRE 2. Induced GRE	F1	E2
W320-D-TRANS07	Release of high energetic aerosolized waste to the atmosphere due to sluice water transfer rate being excessive resulting in the Tank 241-AY-102 waste level being lowered quickly with the waste temperature to high. This results in a large steam bump and flammable gas release with ignition.	1. Operator mistake 2. Level indication fault 3. Pump controller fault	F1	E2
W320-D-TRANS11	Release of large high energy aerosolized radioactive waste to the atmosphere from a spray leak from transfer line due to seismic event.	1. Natural Phenomena	F1	E2

Table C-4. Hazardous Conditions with Potential Severe Environmental Consequences (E2 and E3). (9 sheets)

ID	Hazardous Condition	Cause	Initial Freq NC	Env Cons
W320-D-VENT12	Release of energetic radioactive aerosol from collapsed Tank 241-C-106 due to incorrect alignment of current ventilation system through sluice nozzle resulting in excessive tank vacuum with loop seal failure.	1. Operator error 2. Communications error	F1	E2
W320-D-VENT17	Release of high energy aerosolized release to the atmosphere due to an ice storm which prevents air inflow into Tank 241-AY-102 resulting in an excessive tank vacuum. This results in a flammable gas release with ignition.	1. Natural phenomena	F1	E2
W320-D-VENT20	Release of energetic radioactive aerosol from collapsed Tank 241-C-106 due to incorrect alignment of new ventilation system through sluice nozzle resulting in excessive tank vacuum with loop seal failure.	1. Operator error 2. Communications error	F1	E2
W320-F-TERM05	Release of liquid waste below grade and aerosol release to atmosphere due to high heat load after completion of sluicing process resulting in the need for water addition to Tank 241-C-106 with a deteriorated tank liner, water leakage into liner gap, steam formation, liner breach and steam bump.	1. Error in calculations	F1	E2
W320-A-TRANS04	Release of large high energy aerosolized waste from Tank 241-C-106 due to high waste temperature during slurry transfer which results in a steam bump. Bump induces flammable gas release which is ignited resulting in a dome burn.	1. Flowmeters fault or out of calibration 2. Operator error in positioning Tank 241-C-106 pump 3. Inadvertent or accidental actuation of Tank 241-C-106 pump but not Tank 241-AY-102 pump 4. ENRAF level indication fault 5. Pump controller fault 6. Tank 241-C-106 T/C fault	F0	E2
W320-A-TRANS05	Release of energetic radioactive aerosol to atmosphere due to temperature out of specification resulting in steam bump when Tank 241-C-106 level is lowered which induces a release of a flammable gas plume and then is ignited.	1. Operator mistake 2. Temperature measurement fault	F0	E2
W320-ABCD-ALL03	Release of energetic radioactive aerosol from tank dome collapse due to flooding on top of tank dome	1. Raw water line rupture 2. Heavy rainfall	F0	E2
W320-ABCD-TRANS06	Release of liquid waste below grade and aerosol release to atmosphere due to sluicing arm breaking off and penetrating Tank 241-C-106 liner resulting in water leakage into liner gap, steam formation, liner breach and steam bump.	1. Primary failure of sluicer 2. Severe Water hammer 3. Severe thermal shock 4. Corrosion 5. Metal fatigue from vibration	F0	E2
W320-B-ALL01	Release of a large amount of high energy aerosolized waste from Tank 241-C-106 dome collapse due to volcanic ashfall.	1. Natural phenomena	F0	E2
W320-B-ALL02	Release of a large amount of high energy aerosolized waste from Tank 241-AY-102 dome collapse due to volcanic ashfall.	1. Natural phenomena	F0	E2
W320-B-ALL03	Release of high energy aerosolized waste to the atmosphere from Tank 241-C-106 dome collapse due to extreme snow fall.	1. Natural phenomena	F0	E2
W320-B-ALL04	Release of large amount of high energy aerosolized waste from 241-AY-102 Tank dome collapse due to extreme snow fall.	1. Natural phenomena	F0	E2

Table C-4. Hazardous Conditions with Potential Severe Environmental Consequences (E2 and E3). (9 sheets)

ID	Hazardous Condition	Cause	Initial Freq NC	Env Cons
W320-B-ALL05	Release of energetic radioactive aerosol from Tank 241-C-106 dome collapse due to dome being overloaded.	1. Maintenance error 2. Procedure violation	F0	E2
W320-B-ALL06	Release of energetic radioactive aerosol from Tank 241-AY-102 dome collapse due to dome being overloaded.	1. Maintenance error 2. Procedure violation	F0	E2
W320-B-ALL08	Large high energy radioactive aerosolized waste release from Tank 241-AY-102 due to a large water intrusion which induces a flammable gas release event. It is then ignited resulting in a dome space fire.	1. Raw water leak 2. Surface water flood	F0	E2
W320-B-FLUSH01	Release of energetic radioactive aerosol from damaged Tank 241-C-106 single shell tank due to ignition of flammable gas plume and resulting filter breach induced by large water intrusion into tank.	1. Maintenance error 2. Communications error between different groups using the pit	F0	E2
W320-B-TRANS14	Large high energy radioactive aerosolized waste release from Tank 241-AY-102 to the atmosphere due to low slurry flow to distributor which results in solids piling up. Pile generates significant amount of flammable gas and LFL is reached in dome space. It is then ignited resulting in a dome space fire.	1. 3-way ball valve in flushing system not fully open 2. Pump controller fault	F0	E2
W320-B-TRANS15	Large high energy aerosolized waste release from Tank 241-AY-102 to the atmosphere due to air injected into the waste from the startup of slurry flow from the distributor. Gas is scrubbed from the waste and LFL is reached in dome space. It is then ignited resulting in a dome space fire.	1. Normal procedure	F0	E2
W320-B-TRANS16	Large high energy radioactive aerosolized waste release from Tank 241-AY-102 to the atmosphere due to distributor nozzle breaking off which results in solids piling up. Pile generates significant amount of flammable gas and LFL is reached in dome space. It is then ignited resulting in a dome space fire.	1. Primary failure of distributor 2. Severe water hammer 3. Severe thermal shock 4. Corrosion 5. Metal fatigue from vibration	F0	E2
W320-B-TRANS17	Release of high energy aerosolized waste from damaged Tank 241-C-106 due to the sluicer hose breaking which then impinges into the solids releasing a region of retained flammable gas. The gas is then ignited and a plume fire results.	1. Primary failure of Hose 2. Severe Water hammer 3. Severe thermal shock 4. Corrosion 5. Fatigue from vibration	F0	E2
W320-B-TRANS18	Release of large high energy aerosolized waste to the atmosphere due to sluice water transfer rate being excessive resulting in the Tank 241-C-106 waste level being lowered quickly with the waste temperature to high. This results in a large steam bump and flammable gas release with a plume burn.	1. Flowmeters fault or out of calibration 2. Operator error in positioning Tank 241-C-106 pump 3. Inadvertent or accidental actuation of Tank 241-C-106 pump but not Tank 241-AY-102 pump 4. ENRAF level indication fault 5. Pump controller fault 6. Tank 241-C-106 T/C fault	F0	E2
W320-BCD-ALL02	Release of energetic radioactive aerosol from collapsed Tank 241-AY-102 due to excessive vacuum resulting from W030 ventilation system inlet damper closing and failure of PCV fails to relieve vacuum.	1. Rotameter valve to controller fault 2. Operator error in adjusting rotameter or inadvertent adjustment	F0	E2

Table C-4. Hazardous Conditions with Potential Severe Environmental Consequences (E2 and E3). (9 sheets)

ID	Hazardous Condition	Cause	Initial Freq NC	Env Cons
W320-BCD-PUMP03	Release of small high energy aerosol to atmosphere due to immersible pump being raised to high in Tank 241-AY-102, winch lifting strap breaking, pump falling into waste results in a flammable gas release which is ignited by broken electrical cables, plume burn.	1. Operator error in positioning direction 2. Inadvertent or accidental actuation 3. Winch controller fault	F0	E2
W320-BCD-PUMP04	Release of energetic radioactive aerosol to atmosphere due to submersible pump being raised to high in Tank 241-AY-102, winch lifting strap breaking, pump falling into waste resulting in a flammable gas release which is ignited by broken electrical cables.	1. Operator error in positioning direction 2. Inadvertent or accidental actuation 3. Winch controller fault	F0	E2
W320-BCD-PUMP08	Release of liquid waste below grade and aerosol release to atmosphere due to submersible pump being raised to high, winch lifting strap breaking, pump falling and penetrating Tank 241-C-106 liner resulting in water leakage into liner gap, steam formation, liner bulges/rips and steam bump occurs.	1. Operator error in positioning direction 2. Inadvertent or accidental actuation 3. Winch controller fault	F0	E2
W320-BCD-PUMP09	Release of large high energy aerosolized waste to atmosphere due to immersible pump being raised to high in Tank 241-C-106, winch lifting strap breaking, pump falling into waste results in a flammable gas release which is ignited by broken electrical cables, plume burn.	1. Operator error in positioning direction 2. Inadvertent or accidental actuation 3. Winch controller fault	F0	E2
W320-D-PUMP04	Release of energetic radioactive aerosol from damaged Tank 241-AY-102 due to pumping of more solids than anticipated. Annulus cooling mod not completed resulting in overheating of waste and a tank bump. Bump induces large flammable gas release. It is then ignited resulting in a dome space fire.	1. Mass flowmeter fault or out of calibration 2. Operator error in positioning slurry pump 3. Inadvertent or accidental repositioning 4. Level indication fault 5. Waste level indicator on pump Tank 241-C-106 fault 6. Pump controller fault	F0	E2
W320-D-TRANS06	Release of large high energy aerosolized waste to the atmosphere due to slurry transfer rate being excessive resulting in a rapid reduction in the hydrostatic pressure in Tank 241-C-106. This results in a flammable gas release. Gas is ignited and a dome space fire results.	1. Sluice flow control fault	F0	E2
W320-D-VENT13	Large high energy radioactive aerosolized waste release from Tank 241-AY-102 to the atmosphere due to influx of cold water spray into tank which results in an excessive vacuum. A large flammable gas release is induced. It is then ignited resulting in a dome space fire.	1. Possible result of slurry distribution	F0	E2
W320-D-VENT16	Large high energy aerosolized waste release from Tank 241-AY-102 to the atmosphere due to the loss of primary or annulus ventilation for an extended period which results in a gradual rise in waste temperature. Flammable gas builds up in the dome space to the LFL. It is then ignited resulting in a dome space fire.	1. Extended loss of power 2. Severe ventilation casualty	F0	E2

Table C-4. Hazardous Conditions with Potential Severe Environmental Consequences (E2 and E3). (9 sheets)

ID	Hazardous Condition	Cause	Initial Freq NC	Env Cons
W320-D-VENT18	Large high energy radioactive aerosolized waste release from Tank 241-AY-102 to the atmosphere due to volcanic ashfall which prevents air inflow to tank. Excessive vacuum results and flammable gas is released to the dome space. It is then ignited resulting in a dome space fire.	1. Natural phenomena	F0	E2
W320-E-TERM03	Large high energy radioactive aerosolized waste release from Tank 241-AY-102 to the atmosphere due to lack of controls on operation of tank after it has been turned into a FG group 1 tank. It is ignited from a lightning strike or other event resulting in a dome space fire.	1. Inadequate prediction of waste behavior	F0	E2

Table C-5. Hazardous Conditions With Potential Radiation Exposure Consequences (RP).

ID	Hazardous Condition	Cause
W320-ABCD-TRANS14	Personnel exposure to Ionizing radiation due to flooding which uncovers transfer lines.	1. Raw water line rupture 2. Natural flooding
W320-ABCD-TRANS15	Personnel exposure to Ionizing radiation due to high winds which uncovers transfer lines.	1. Natural phenomena
W320-ABCD-TRANS16	Personnel exposure to Ionizing radiation due to excavation which uncovers transfer lines.	1. Mistake in excavation location 2. Failure to determine transfer line location
W320-BCD-FLUSH03	Personnel exposure to ionizing radiation from flush tank of transfer truck due to start of submersible pump in Tank 241-C-106 during the flush of slurry transfer line. Flush tank is filled with radioactive material.	1. Operator Error 2. Failure in submersible pump circuitry

Table C-6. Hazardous Conditions With Potential Occupational Safety Consequences (OCC).

ID	Hazardous Condition	Cause
W320-ABCD-VENT01	Release of toxic gas from Tank 241-AY-102 due to failure of ventilation system and gradual rise in waste temperature resulting in toxic gas release from tank and to workers.	1. Loss of power 2. Equipment casualty
W320-D-VENT10	Release of toxic gas from Tank 241-AY-102 due to inadequate ventilation from W030 which results in high waste temperature , increased toxic gas release and facility worker inhalation of toxic gases.	1. Error in calculations 2. Design error 3. Construction fault
W320-E-TERM02	Release of toxic hydrogen cyanide gas from Tank 241-AY-102 due to burp	1. Inadequate prediction of waste behavior

This page intentionally left blank.

APPENDIX D
CONTROL ALLOCATION TABLES

This page intentionally left blank.

APPENDIX D
CONTROL ALLOCATION TABLES

LIST OF TABLES

D-1 Safety SSCs and TSRs for Potential S3 and S2 Consequences D1-1

D-2 Safety SSCs and TSRs for Potentially Severe (E3 and E2) Environmental Consequences D2-1

D-3 Defense-in-Depth Controls for Potential S3 and S2 Consequences . . . D3-1

D-4 Defense-in-Depth Controls for Potentially Severe (E3 and E2) Environmental Consequences D4-1

APPENDIX D
LIST OF TERMS

AC	Administrative Control
ALC	air lift circulator
AWF	Aging Waste Facility
DST	double-shell tank
GRE	gas release event
HASP	Tank Farms Health and Safety Plan
HEPA	high-efficiency particulate air (filter)
IOSR	Interim Operational Safety Requirements
JCO	Justification for Continued Operation
JCS	Job Control System
LCO	limiting condition for operation
LCS	limiting control setting
LFL	lower flammability limit
SC	Safety-Class
SST	single-shell tank
TWRS	Tank Waste Remediation System
WRSS	waste retrieval sluicing system

Table D-1. Safety SSCs and TSRs for Potential S3 and S2 Consequences. (58 sheets)

Rep Acc W320	ID	Hazardous Conditions	Candidate Causes	Prev SSC	Prev TSR	Mit SSC	Mit TSR	Cont Memo
01	W320-BCD-TRANS01	Release of ionizing radiation and radioactive gas from Tank 241-C-106 due to a criticality event in the tank pump vortices	1. Natural occurrence if conditions are met	None required	AC: Nuclear Criticality Safety (CPS)	None required	None required	Controls based on accident analysis (Nuclear Criticality)
01X	W320-BCD-TRANS02	Release of ionizing radiation and radioactive gas from Tank 241-C-106 due to a criticality event in the tank	1. Flushing valve misposition 2. Pump controller fault 3. Excessive solids in slurry flow	None required	AC: Nuclear Criticality Safety (CPS)	None required	None required	Controls based on accident analysis (Nuclear Criticality)
01X	W320-BCD-TRANS03	Release of ionizing radiation and radioactive gas from Tank 241-C-106 due to a criticality event in the tank	1. Primary failure of distributor 2. Severe water hammer 3. Severe thermal shock 4. Corrosion 5. Metal fatigue from vibration	None required	AC: Nuclear Criticality Safety (CPS)	None required	None required	Controls based on accident analysis (Nuclear Criticality)
01X	W320-BCD-TRANS04	Release of ionizing radiation and radioactive gas from Tank 241-C-106 due to a criticality event in the tank during sluicing	1. Natural occurrence if conditions are met	None required	AC: Nuclear Criticality Safety (CPS)	None required	None required	Controls based on accident analysis (Nuclear Criticality)
01X	W320-D-TERM01	Release of ionizing radiation and radioactive gas from Tank 241-AY-102 due to a criticality event in the tank	1. Natural occurrence if conditions are met	None required	AC: Nuclear Criticality Safety (CPS)	None required	None required	Controls based on accident analysis (Nuclear Criticality)

Table D-1. Safety SSCs and TSRs for Potential S3 and S2 Consequences. (58 sheets)

Rep Acc W320	ID	Hazardous Conditions	Candidate Causes	Prev SSC	Prev TSR	Mit SSC	Mit TSR	Cont Memo
02	W320-D-ALL01	Release of low energy radioactive aerosol through failed filters from Tank 241-AY-102 due to a steam bump	1. Human error 2. Communications error with other workers using the tank 3. IOSRs require activation of ALCs in event temperature above limit	SC: Tank 241-AY-102 annulus ventilation sys	AC: Trans cntrls (material balance) LCS/LCO: DST and AWF Tanks waste temp cntrls AC: Trans ctrls (mat balance and topography) AC: Proc instr and meas and test equip AC: Vent cntrls (annulus)	SS: CAM interlk on 702-A ventilation sys SS: CAM interlk on W-030 ventilation sys	LCO: Ventilation stack CAM interlk syss AC: HEPA Filter cntrls (source term)	Controls based on accident analysis (HEPA Filter Failure - Exposure to High Temperature or Pressure)
02X	W320-ALL-TRANS01	Release of low energy radioactive aerosol through failed filters from Tank 241-AY-102 due to moisture buildup on ventilation system HEPA filters	1. Natural occurrence under proper conditions	None required	AC: Trans cntrls (material balance)	SS: CAM interlk on 702-A ventilation sys SS: CAM interlk on W-030 ventilation sys	LCO: Ventilation stack CAM interlk syss AC: HEPA Filter cntrls (source term)	Controls based on accident analysis (HEPA Filter Failure - Exposure to High Temperature or Pressure)
02X	W320-B-FLUSH01	Release of energetic radioactive aerosol from damaged Tank 241-C-106 single shell tank due to ignition of flammable gas plume and resulting filter breach induced by large water intrusion into tank.	1. Maintenance error 2. Communications error between different groups using the pit	None required	AC: Trans cntrls (material balance)	SS: CAM interlk on 296-P-16 ventilation sys SS: CAM interlk on 296-C-006 ventilation sys	LCO: Ventilation stack CAM interlk syss AC: HEPA Filter cntrls (source term)	Controls based on accident analysis (HEPA Filter Failure - Exposure to High Temperature or Pressure)

Table D-1. Safety SSCs and TSRs for Potential S3 and S2 Consequences. (58 sheets)

Rep Acc W320	ID	Hazardous Conditions	Candidate Causes	Prev SSC	Prev TSR	Mit SSC	Mit TSR	Cont Memo
02X	W320-B-FLUSH02	Release of low energy radioactive aerosol through failed filters due to a large steam bump in Tank 241-C-106 as a result of high tank vacuum resulting from flushing water spray condensing dome vapors.	1. Planned	None required	None required	SS: CAM interlk on 296-P-16 ventilation sys SS: CAM interlk on 296-C-006 ventilation sys	LCO: Ventilation stack CAM interlk syss AC: HEPA Filter cntrls (source term)	Controls based on accident analysis (HEPA Filter Failure - Exposure to High Temperature or Pressure)
02X	W320-B-FLUSH03	Release of low energy radioactive aerosol through failed filters of Tank 241-AY-102 due to a large steam bump as a result of high tank vacuum due to high condensation rate in tank from flushing water spray through antisiphon holes.	1. Planned	SC: Tank 241-AY-102 annulus ventilation sys	AC: Trans cntrls (material balance) LCS/LCO: DST and AWF Tanks waste temp cntrls AC: Trans ctrls (mat balance and topography) AC: Proc instr and meas and test equip AC: Vent cntrls (annulus)	SS: CAM interlk on 702-A ventilation sys SS: CAM interlk on W-030 ventilation sys	LCO: Ventilation stack CAM interlk syss AC: HEPA Filter cntrls (source term)	Controls based on accident analysis (HEPA Filter Failure - Exposure to High Temperature or Pressure)
02X	W320-B-TRANS01	Release of small low energy aerosolized waste from the annulus of Tank 241-AY-102 due to steam pulses from boiling waste in annulus region which results in the failure of annulus filters. Waste leaks into annulus due to corrosion of primary tank from new waste composition.	1. Inadequate prediction of waste behavior	SC: Tank 241-AY-102 annulus ventilation sys SC: Primary tank leak detection syss	AC: Trans cntrls (material balance) LCS/LCO: DST and AWF Tanks waste temp cntrls AC: Trans ctrls (mat balance and topography) AC: Proc instr and meas and test equip AC: Vent cntrls (annulus) LCO: Primary tank leak detection sys	SS: CAM interlk on 702-A ventilation sys SS: CAM interlk on W-030 ventilation sys	LCO: Ventilation stack CAM interlk syss AC: HEPA Filter cntrls (source term)	Controls based on accident analysis (HEPA Filter Failure - Exposure to High Temperature or Pressure)

Table D-1. Safety SSCs and TSRs for Potential S3 and S2 Consequences. (58 sheets)

Rep Acc W320	ID	Hazardous Conditions	Candidate Causes	Prev SSC	Prev TSR	Mit SSC	Mit TSR	Cont Memo
02X	W320-D-TRANS02	Release of low energy radioactive aerosol from largely intact Tank 241-C-106 due to excessive sluicer flow which results in radioactive air release through HEPAs.	1. Natural outcome if conditions are met	None required	AC: Trans cntrls (material balance)	SS: CAM interlk on 296-P-16 ventilation sys SS: CAM interlk on 296-C-006 ventilation sys	LCO: Ventilation stack CAM interlk syss AC: HEPA Filter cntrls (source term)	Controls based on accident analysis (HEPA Filter Failure - Exposure to High Temperature or Pressure)
02X	W320-D-VENT04	Release of small low energy radioactive aerosol through failed filters from Tank 241-AY-102 due to cold water spray into tank, tank vacuum and resulting tank bump	1. Possible result of slurry distribution	SC: Tank 241-AY-102 annulus ventilation sys	AC: Trans cntrls (material balance) LCS/LCO: DST and AWF Tanks waste temp cntrls AC: Trans ctrls (mat balance and topography) AC: Proc instr and meas and test equip AC: Vent cntrls (annulus)	SS: CAM interlk on 702-A ventilation sys SS: CAM interlk on W-030 ventilation sys	LCO: Ventilation stack CAM interlk syss AC: HEPA Filter cntrls (source term)	Controls based on accident analysis (HEPA Filter Failure - Exposure to High Temperature or Pressure)
03	W320-D-VENT07	Release of low energy radioactive aerosol from Tank 241-C-105/ Tank 241-C-106 ventilation system due to failure to determine ventilation leak during sluicing.	1. Ducting corrosion 2. Seal deterioration	None required	AC: Ventilation cntrls	None required	None required	Controls based on accident analysis (Unfiltered Release)

Table D-1. Safety SSCs and TSRs for Potential S3 and S2 Consequences. (58 sheets)

Rep Acc W320	ID	Hazardous Conditions	Candidate Causes	Prev SSC	Prev TSR	Mit SSC	Mit TSR	Cont Memo
03X	W320-ABCD-CHILL01	Release of low energy radioactive aerosol from largely intact tank due to excessive cooling from process chiller and vacuum in Tank 241-C-106 from ventilation system which results in excedance of loop seal vacuum and unfiltered release.	1. Chiller control fault 2. High humidity	None required	AC:Ventilation cntrls	SS: Ventilation CAM interlk sys	LCO: Ventilation stack CAM interlk syss	Controls based on accident analysis (Unfiltered Release)
03X	W320-B-TRANS06	Release of low energy radioactive aerosol from largely intact Tank 241-AY-102 due to excessive slurry flow resulting in increased aerosol generation and errant flow release.	1. 3-way ball valve in flushing system not fully open 2. Pump controller fault	None required	AC: Ventilation cntrls	SS: Ventilation CAM interlk sys	LCO: Ventilation stack CAM interlk syss	Controls based on accident analysis (Unfiltered Release)
03X	W320-B-TRANS07	Release of low energy radioactive aerosol from largely intact Tank 241-AY-102 due to startup of slurry flow to distributor resulting in air being bubbled through waste and release of vapor.	1. Normal procedure	None required	AC: Ventilation cntrls	SS: Ventilation CAM interlk sys	LCO: Ventilation stack CAM interlk syss	Controls based on accident analysis (Unfiltered Release)

Table D-1. Safety SSCs and TSRs for Potential S3 and S2 Consequences. (58 sheets)

Rep Acc W320	ID	Hazardous Conditions	Candidate Causes	Prev SSC	Prev TSR	Mit SSC	Mit TSR	Cont Memo
03X	W320-B-TRANS08	Release of low energy radioactive aerosol from largely intact Tank 241-AY-102 due to distributor breaking off which results in excessive aerosol generated in head space and release through HEPAs.	1. Primary failure of distributor 2. Severe water hammer 3. Severe thermal shock 4. Corrosion 5. Metal fatigue from vibration	None required	AC: Ventilation cntrls	SS: Ventilation CAM interlk sys	LCO: Ventilation stack CAM interlk syss	Controls based on accident analysis (Unfiltered Release)
03X	W320-B-TRANS10	Release of low energy radioactive aerosol from largely intact Tank 241-AY-102 due to distributor breaking off which results in excessive aerosol generated in head space and release through HEPAs.	1. Primary failure of sluicer 2. Severe water hammer 3. Severe thermal shock 4. Corrosion 5. Metal fatigue from vibration	None required	AC: Ventilation cntrls	SS: Ventilation CAM interlk sys	LCO: Ventilation stack CAM interlk syss	Controls based on accident analysis (Unfiltered Release)
03X	W320-B-TRANS11	Release of low energy radioactive aerosol from largely intact Tank 241-AY-102 due to excessive corrosion and heat loading from new waste.	1. Inadequate prediction of waste behavior	SC: Annulus ventilation syss	AC: Ventilation cntrls LCS/LCO: DST and AWF Tanks waste temp cntrls AC: Proc instr and meas and test equip AC: Vent cntrls (annulus)	SS: Ventilation CAM interlk sys	LCO: Ventilation stack CAM interlk syss	Controls based on accident analysis (Unfiltered Release)
03X	W320-B-TRANS12	Release of low energy radioactive aerosol from interconnected tanks due to increased heat loading of Tank 241-AY-102 and loss of vacuum.	1. Inadequate prediction of waste behavior 2. Existing system cannot control flow rates from different tanks. Depends on inleakage 3. W030 system has lower exhaust capabilities	SC: Annulus ventilation syss	AC: Ventilation cntrls LCS/LCO: DST and AWF Tanks waste temp cntrls AC: Proc instr and meas and test equip AC: Vent cntrls (annulus)	SS: Ventilation CAM interlk sys	LCO: Ventilation stack CAM interlk syss	Controls based on accident analysis (Unfiltered Release)

Table D-1. Safety SSCs and TSRs for Potential S3 and S2 Consequences. (58 sheets)

Rep Acc W320	ID	Hazardous Conditions	Candidate Causes	Prev SSC	Prev TSR	Mit SSC	Mit TSR	Cont Memo
03X	W320-D-PURGE01	Release of low energy aerosolized waste from largely intact Tank 241-C-106 due to nitrogen line break and loss of vacuum.	1. Tube failure 2. Improper Assembly 3. Regulator fault	None required	None required	None required	None required	No controls required based on F0 frequency with no controls
03X	W320-D-TRANS04	Release of low energy radioactive aerosol from largely intact Tank 241-C-106 due to high temperature sluice water which increases head space pressure with increased errant flow.	1. High temperature in Tank 241-AY-102	None required	AC: Ventilation cntrls LCS/LCO: SST waste temp cntrls AC: Proc instr and meas and test equip	SS: Ventilation CAM interlk sys	None required	Controls based on accident analysis (Unfiltered Release)
03X	W320-D-VENT08	Release of low energy radioactive aerosol from largely intact tank due to excessive vacuum in Tank 241-C-106 from new ventilation system which results in loop seal failure and unfiltered release.	1. Operator error 2. Communications error	None required	AC: Ventilation cntrls TSR controls in BIO addendum section 3.4.2.2 and 3.4.2.11 also apply	SS: Ventilation CAM interlk sys	None required	Controls based on accident analysis (Unfiltered Release)

Table D-1. Safety SSCs and TSRs for Potential S3 and S2 Consequences. (58 sheets)

Rep Acc W320	ID	Hazardous Conditions	Candidate Causes	Prev SSC	Prev TSR	Mit SSC	Mit TSR	Cont Memo
03X	W320-D-VENT11	Release of low energy radioactive aerosol from largely intact tank due to excessive vacuum in Tank 241-C-106 from current ventilation system which results in loop seal failure and unfiltered release.	1. Operator error 2. Communications error	None required	AC: Ventilation cntrls TSR controls in BIO addendum section 3.4.2.2 and 3.4.2.11 also apply	SS: Ventilation CAM interlk sys	None required	Controls based on accident analysis (Unfiltered Release)
03X	W320-E-TERM01	Release of large high energy radioactive aerosol from Tank 241-AY-102 due to excessive fluffing of waste which results in tank structural damage and unfiltered release.	1. Inadequate prediction of waste behavior	SC: Annulus ventilation syss	AC: Ventilation cntrls TSR controls in BIO addendum section 3.4.2.2 and 3.4.2.11 also apply	SS: Ventilation CAM interlk sys	None required	Controls based on accident analysis (Unfiltered Release)
04	W320-ABCD-TRANS11	Release of energetic radioactive aerosol from transfer line in pit due to flammable gas collecting in pit and being ignited. Cover block lifted and falls onto piping in pit resulting in spray release.	1. Chimney through deep drop legs 2. 6 in. high capacity drain to dome space 3. Pit sealed to minimize inleakage	None required	AC: Ignition cntrls (vehicle)	None required	AC: Emergency prep (response procedures)	Controls based on accident analysis (Fire in Contaminated Area)

Table D-1. Safety SSCs and TSRs for Potential S3 and S2 Consequences. (58 sheets)

Rep Acc W320	ID	Hazardous Conditions	Candidate Causes	Prev SSC	Prev TSR	Mit SSC	Mit TSR	Cont Memo
04X	W320-ABCD-CHILL02	Release of energetic radioactive aerosol from covered pit or deadend pipe due to propylene glycol spray leak into ventilation system of Tank 241-C-106 with ignition propagating into tank dome.	1. Piping or tubing leak	None required	None required	None required	AC: Emergency prep (response procedures)	Controls based on accident analysis (Fire in Contaminated Area)
04X	W320-BCD-ALL01	Release of energetic radioactive aerosol from covered pit on Tank 241-C-106 due to propylene glycol leak into pit with ignition.	1. Piping or tubing leak	None required	None required	None required	AC: Emergency prep (response procedures)	Controls based on accident analysis (Fire in Contaminated Area)

Table D-1. Safety SSCs and TSRs for Potential S3 and S2 Consequences. (58 sheets)

Rep Acc W320	ID	Hazardous Conditions	Candidate Causes	Prev SSC	Prev TSR	Mit SSC	Mit TSR	Cont Memo
05X	ANALYZED ACCIDENT: 5 - Caustic Spray Leak	This accident is analyzed and the results presented in the current BIO. An additional control has been included for Sodium Hydroxide cargo tanks to meet applicable DOT specifications.		None required	AC: Caustic trans cntrls (sleeving - system pressure - piping thickness - cargo tank DOT specifications)	None required	None required	No specific TSR controls were identified because the hazard is solely toxicological . A non-TSR control is established requiring 4 mil thickness plastic sleeving around delivery piping; limitation on the caustic delivery system to be less than or equal to 125 psi, and use of schedule 10 steel pipe as a minimum thickness for caustic delivery if used.
06A	W320-ABCD-ALL01	Release of energetic radioactive aerosol from damaged tank due to flooding on top of Tank 241-C-106 dome	1. Raw water line rupture 2. Heavy rainfall	None required	AC: Dome loading cntrls (excessive loads)	None required	None required	Controls based on accident analysis (Tank Failure Due to Excessive Loads)
06B	W320-ABCD-ALL02	Release of energetic radioactive aerosol from damaged tank due to flooding on top of Tank 241-AY-102 dome	1. Raw water line rupture 2. Heavy rainfall	None required	AC: Dome loading cntrls (excessive loads)	None required	None required	Controls based on accident analysis (Tank Failure Due to Excessive Loads)

Table D-1. Safety SSCs and TSRs for Potential S3 and S2 Consequences. (58 sheets)

Rep Acc W320	ID	Hazardous Conditions	Candidate Causes	Prev SSC	Prev TSR	Mit SSC	Mit TSR	Cont Memo
06X	W320-ABCD-ALL03	Release of energetic radioactive aerosol from tank dome collapse due to flooding on top of tank dome	1. Raw water line rupture 2. Heavy rainfall	None required	AC: Dome loading cntrls (excessive loads)	None required	None required	Controls based on accident analysis (Tank Failure Due to Excessive Loads)
06X	W320-B-ALL01	Release of a large amount of high energy aerosolized waste from Tank 241-C-106 dome collapse due to volcanic ashfall.	1. Natural phenomena	None required	AC: Dome loading cntrls (excessive loads)	None required	None required	Controls based on accident analysis (Tank Failure Due to Excessive Loads)
06X	W320-B-ALL02	Release of a large amount of high energy aerosolized waste from Tank 241-AY-102 dome collapse due to volcanic ashfall.	1. Natural phenomena	None required	AC: Dome loading cntrls (excessive loads)	None required	None required	Controls based on accident analysis (Tank Failure Due to Excessive Loads)
06X	W320-B-ALL03	Release of high energy aerosolized waste to the atmosphere from Tank 241-C-106 dome collapse due to extreme snow fall.	1. Natural phenomena	None required	AC: Dome loading cntrls (excessive loads)	None required	None required	Controls based on accident analysis (Tank Failure Due to Excessive Loads)
06X	W320-B-ALL04	Release of large amount of high energy aerosolized waste from Tank 241-AY-102 dome collapse due to extreme snow fall.	1. Natural phenomena	None required	AC: Dome loading cntrls (excessive loads)	None required	None required	Controls based on accident analysis (Tank Failure Due to Excessive Loads)

Table D-1. Safety SSCs and TSRs for Potential S3 and S2 Consequences. (58 sheets)

Rep Acc W320	ID	Hazardous Conditions	Candidate Causes	Prev SSC	Prev TSR	Mit SSC	Mit TSR	Cont Memo
06X	W320-B-ALL05	Release of energetic radioactive aerosol from Tank 241-C-106 dome collapse due to dome being overloaded.	1. Maintenance error 2. Procedure violation	None required	AC: Dome loading cntrls (excessive loads)	None required	None required	Controls based on accident analysis (Tank Failure Due to Excessive Loads)
06X	W320-B-ALL06	Release of energetic radioactive aerosol from Tank 241-AY-102 dome collapse due to dome being overloaded.	1. Maintenance error 2. Procedure violation	None required	AC: Dome loading cntrls (excessive loads)	None required	None required	Controls based on accident analysis (Tank Failure Due to Excessive Loads)
06X	W320-D-TRANS03	Release of low energy radioactive aerosol from largely intact Tank 241-C-106 due to sluicer moving debris impacting drop leg in tank which breaches dome.	1. Expected outcome of high velocity sluicing Many objects are in the waste	None required	None required	SC: SST ventilation SC: DST ventilation	LCO: DST and AWF ventilation sys LCO: SST ventilation sys - active	Controls derived from flammable gas deflagration analysis. Hazardous condition results in breach of confinement integrity. The ventilation system mitigates the effects by maintaining filtered confinement.
07A	W320-BCD-ALL03	Release of energetic radioactive aerosol from damaged Tank 241-C-106 due to excessive vacuum resulting from ventilation system fan overspeed and failure of tank loop seal failure.	1. Rotameter valve to controller fault 2. Operator error in adjusting rotameter or inadvertant adjustment	None required	None required	None required	None required	No controls required based on accident analysis (Tank Failure Due to Vacuum or Degradation)

Table D-1. Safety SSCs and TSRs for Potential S3 and S2 Consequences. (58 sheets)

Rep Acc W320	ID	Hazardous Conditions	Candidate Causes	Prev SSC	Prev TSR	Mit SSC	Mit TSR	Cont Memo
07B	W320-BCD-ALL02	Release of energetic radioactive aerosol from collapsed Tank 241-AY-102 due to excessive vacuum resulting from W030 ventilation system inlet damper closing and failure of PCV fails to relieve vacuum.	1. Rotameter valve to controller fault 2. Operator error in adjusting rotameter or inadvertant adjustment	None required	None required	None required	None required	No controls required based on accident analysis (Tank Failure Due to Vacuum or Degradation)
07X	W320-ABCD-CHILL03	Release of energetic radioactive aerosol from collapsed Tank 241-C-106 due to excessive cooling from process chiller which restricts inflow and loop seal fails to operate.	1. Chiller control fault 2. High humidity	None required	None required	None required	None required	No controls required based on accident analysis (Tank Failure Due to Vacuum or Degradation)
07X	W320-B-FLUSH04	Release of low energy radioactive aerosol from breached Tank 241-C-106 due to flushing water spray through sluice nozzle resulting in excessive tank vacuum.	1. Planned	None required	None required	None required	None required	No controls required based on accident analysis (Tank Failure Due to Vacuum or Degradation)

Table D-1. Safety SSCs and TSRs for Potential S3 and S2 Consequences. (58 sheets)

Rep Acc W320	ID	Hazardous Conditions	Candidate Causes	Prev SSC	Prev TSR	Mit SSC	Mit TSR	Cont Memo
07X	W320-B-FLUSH05	Release of low energy radioactive aerosol from largely intact Tank 241-AY-102 due to flushing water spray thru antisiphon holes resulting in excessive vacuum in tank and tank breach.	1. Planned	None required	None required	None required	None required	No controls required based on accident analysis (Tank Failure Due to Vacuum or Degradation)
07X	W320-B-VENT01	Release of low energy radioactive aerosol from largely intact Tank 241-AY-102 due to volcanic ashfall which prevents air intake through existing ventilation system with W030 intake resulting in excessive vacuum and tank breach.	1. Natural phenomena	None required	None required	None required	None required	No controls required based on accident analysis (Tank Failure Due to Vacuum or Degradation)
07X	W320-B-VENT02	Release of low energy radioactive aerosol from largely intact Tank 241-AY-102 due to volcanic ashfall which prevents air intake through W030 ventilation upgrade system resulting in excessive vacuum and tank breach.	1. Natural phenomena	None required	None required	None required	None required	No controls required based on accident analysis (Tank Failure Due to Vacuum or Degradation)

Table D-1. Safety SSCs and TSRs for Potential S3 and S2 Consequences. (58 sheets)

Rep Acc W320	ID	Hazardous Conditions	Candidate Causes	Prev SSC	Prev TSR	Mit SSC	Mit TSR	Cont Memo
07X	W320-B-VENT03	Release of low energy radioactive aerosol from breached Tank 241-AY-102 due to ice storm which prevents air inflow through W030 ventilation upgrade and results in excessive vacuum.	1. Natural phenomena	None required	None required	None required	None required	No controls required based on accident analysis (Tank Failure Due to Vacuum or Degradation)
07X	W320-B-VENT04	Release of low energy radioactive aerosol from breached Tank 241-AY-102 due to ice storm which prevents air inflow through existing exhaust system with W030 intake and results in excessive vacuum.	1. Natural phenomena	None required	None required	None required	None required	No controls required based on accident analysis (Tank Failure Due to Vacuum or Degradation)
07X	W320-B-VENT05	Release of low energy radioactive aerosol from largely intact Tank 241-AY-102 due to cold water spray into tank which results in excessive vacuum and tank breach.	1. Possible result of slurry distribution	None required	None required	None required	None required	No controls required based on accident analysis (Tank Failure Due to Vacuum or Degradation)

Table D-1. Safety SSCs and TSRs for Potential S3 and S2 Consequences. (58 sheets)

Rep Acc W320	ID	Hazardous Conditions	Candidate Causes	Prev SSC	Prev TSR	Mit SSC	Mit TSR	Cont Memo
07X	W320-B-VENT06	Release of low energy radioactive aerosol from breached Tank 241-AY-102 due to ice storm which prevents air inflow through existing ventilation system and results in excessive vacuum.	1. Natural phenomena	None required	None required	None required	None required	No controls required based on accident analysis (Tank Failure Due to Vacuum or Degradation)
07X	W320-B-VENT07	Release of low energy radioactive aerosol from largely intact tank due to volcanic ashfall preventing air inflow into Tank 241-AY-102 through existing ventilation system resulting in tank breach.	1. Natural phenomena	None required	None required	None required	None required	No controls required based on accident analysis (Tank Failure Due to Vacuum or Degradation)
07X	W320-BCD-ALL04	Release of low energy radioactive aerosol from largely intact Tank 241-C-106 due to fan controller failure resulting in excessive vacuum in tank and loop seal actuation.	1. Rotameter valve to controller fault 2. Operator error in adjusting rotameter or inadvertant adjustment	None required	None required	None required	None required	No controls required based on accident analysis (Tank Failure Due to Vacuum or Degradation)

Table D-1. Safety SSCs and TSRs for Potential S3 and S2 Consequences. (58 sheets)

Rep Acc W320	ID	Hazardous Conditions	Candidate Causes	Prev SSC	Prev TSR	Mit SSC	Mit TSR	Cont Memo
07X	W320-D-VENT12	Release of energetic radioactive aerosol from collapsed Tank 241-C-106 due to incorrect alignment of current ventilation system through sluice nozzle resulting in excessive tank vacuum with loop seal failure.	1. Operator error 2. Communications error	None required	None required	None required	None required	No controls required based on accident analysis (Tank Failure Due to Vacuum or Degradation)
07X	W320-D-VENT20	Release of energetic radioactive aerosol from collapsed Tank 241-C-106 due to incorrect alignment of new ventilation system through sluice nozzle resulting in excessive tank vacuum with loop seal failure.	1. Operator error 2. Communications error	None required	None required	None required	None required	No controls required based on accident analysis (Tank Failure Due to Vacuum or Degradation)
08A	W320-D-ALL07	Release of energetic radioactive aerosol from damaged double shell Tank 241-AY-102 due to seismic event which releases flammable gas from the waste and after shocks cause mechanical sparks which ignites the flammable gas mixture.	1. Natural Phenomena	SC: DST ventilation	LCO: DST and AWF ventilation sys AC: Flammability cntrls AC: Ignition cntrls AC: Flammable gas mon cntrls AC: Trans cntrls (mat balance and supernate removal)	None required	AC: Emergency Preparedness	Controls based on Flammable Gas JCO and LA-UR-92-3196, with additional controls on primary tank leak Detect Syss

Table D-1. Safety SSCs and TSRs for Potential S3 and S2 Consequences. (58 sheets)

Rep Acc W320	ID	Hazardous Conditions	Candidate Causes	Prev SSC	Prev TSR	Mit SSC	Mit TSR	Cont Memo
088	W320-BCD-PUMP04	Release of energetic radioactive aerosol to atmosphere due to submersible pump being raised too high in Tank 241-AY-102, winch lifting strap breaking, pump falling into waste resulting in a flammable gas release which is ignited by broken electrical cables.	1. Operator error in positioning direction 2. Inadvertant or accidental actuation 3. Winch controller fault	SC: DST ventilation	LCO: DST and AWF ventilation sys AC: Flammability cntrls AC: Ignition cntrls AC: Flammable gas mon cntrls AC: Trans cntrls (mat balance and supernate removal)	None required	AC: Emergency Preparedness	Controls based on Flammable Gas JCO
08C	W320-A-TRANS05	Release of energetic radioactive aerosol to atmosphere due to temperature out of specification resulting in steam bump when Tank 241-C-106 level is lowered which induces a release of a flammable gas plume and then is ignited.	1. Operator mistake 2. Temperature measurement fault	SC: SST ventilation	LCO: SST ventilation sys - active AC: Flammability cntrls AC: Ignition cntrls AC: Flammable gas mon cntrls AC: Trans cntrls (mat balance and supernate removal)	None required	AC: Emergency Preparedness	Controls based on Flammable Gas JCO
08X	W320-A-TRANS04	Release of large high energy aerosolized waste from Tank 241-C-106 due to high waste temperature during slurry transfer which results in a steam bump. Bump induces flammable gas release which is ignited resulting in a dome burn.	1. Flowmeters fault or out of calibration 2. Operator error in positioning Tank 241-C-106 pump 3. Inadvertant or accidental actuation of Tank 241-C-106 pump but not Tank 241-AY-102 pump 4. ENRAF level indication fault 5. Pump controller fault 6. Tank 241-C-106 T/C fault	SC: SST ventilation	LCO: SST ventilation sys - active AC: Flammability cntrls AC: Ignition cntrls AC: Flammable gas mon cntrls AC: Trans cntrls (mat balance and supernate removal)	None required	AC: Emergency Preparedness	Controls based on Flammable Gas JCO

Table D-1. Safety SSCs and TSRs for Potential S3 and S2 Consequences. (58 sheets)

Rep Acc W320	ID	Hazardous Conditions	Candidate Causes	Prev SSC	Prev TSR	Mit SSC	Mit TSR	Cont Memo
08X	W320-ABCDF-ALL01*	Release of energetic radioactive aerosol to atmosphere due to buildup of flammable gas in Tank 241-AY-102 pit drain pipe which is then ignited.	1. Flammable gas generation from tank waste	SC: DST ventilation	LCO: DST and AWF ventilation sys AC: Flammability cntrls AC: Ignition cntrls AC: Flammable gas mon cntrls AC: Trans cntrls (mat balance and supernate removal)	None required	AC: Emergency Preparedness	Controls based on Flammable Gas JCO
08X	W320-B-ALL07	Small low energy aerosolized waste release from largely intact tank due to flammable gas collecting in a Tank 241-C-106 pit where it is ignited resulting in the cover blocks being displaced and falling into pit. Cover block strikes riser-liner joint resulting in an unfiltered release from dome space.	1. Chimney through deep drop legs 2. 6 in. high capacity drain to dome space 3. Pit sealed to minimize inleakage	SC: SST ventilation	LCO: SST ventilation sys - active and passive AC: Flammability cntrls AC: Ignition cntrls AC: Flammable gas mon cntrls AC: Trans cntrls (mat balance and supernate removal)	None required	AC: Emergency Preparedness	Controls based on Flammable Gas JCO
08X	W320-B-ALL08	Large high energy radioactive aerosolized waste release from Tank 241-AY-102 due to a large water intrusion which induces a flammable gas release event. It is then ignited resulting in a dome space fire.	1. Raw water leak 2. Surface water flood	SC: DST ventilation	LCO: DST and AWF ventilation sys AC: Flammability cntrls AC: Ignition cntrls AC: Flammable gas mon cntrls AC: Trans cntrls (mat balance and supernate removal)	None required	AC: Emergency Preparedness	Controls based on Flammable Gas JCO

Table D-1. Safety SSCs and TSRs for Potential S3 and S2 Consequences. (58 sheets)

Rep Acc W320	ID	Hazardous Conditions	Candidate Causes	Prev SSC	Prev TSR	Mit SSC	Mit TSR	Cont Memo
08X	W320-B-TERM01	Release of toxic ammonia gas from tank due to burp which exposes facility personnel to toxic gases.	1. Inadequate prediction of waste behavior	SC: SST ventilation SC: DST ventilation	LCO: DST and AWF ventilation sys LCO: SST ventilation sys - active and passive AC: Flammability cntrls AC: Ignition cntrls AC: Flammable gas mon cntrls AC: Trans cntrls (mat balance and supernate removal)	None required	AC: Emergency Preparedness	Controls based on Flammable Gas JCO
08X	W320-B-TRANS13	Small low energy aerosolized waste release from largely intact tank due to flammable gas collecting in a Tank 241-AY-102 pit where it is ignited resulting in the cover blocks being displaced and falling into pit. Cover block strikes riser-liner joint resulting in an unfiltered release from dome space.	1. Chimney through deep drop legs 2. 6 in. high capacity drain to dome space 3. Pit sealed to minimize inleakage	SC: DST ventilation	LCO: DST and AWF ventilation sys AC: Flammability cntrls AC: Ignition cntrls AC: Flammable gas mon cntrls AC: Trans cntrls (mat balance and supernate removal)	None required	AC: Emergency Preparedness	Controls based on Flammable Gas JCO

Table D-1. Safety SSCs and TSRs for Potential S3 and S2 Consequences. (58 sheets)

Rep Acc W320	ID	Hazardous Conditions	Candidate Causes	Prev SSC	Prev TSR	Mit SSC	Mit TSR	Cont Memo
08X	W320-B-TRANS14	Large high energy radioactive aerosolized waste release from Tank 241-AY-102 to the atmosphere due to low slurry flow to distributor which results in solids piling up. Pile generates significant amount of flammable gas and LFL is reached in dome space. It is then ignited resulting in a dome space fire.	1. 3-way ball valve in flushing system not fully open 2. Pump controller fault	SC: DST ventilation	LCO: DST and AWF ventilation sys AC: Flammability cntrls AC: Ignition cntrls AC: Flammable gas mon cntrls AC: Trans cntrls (mat balance and supernate removal)	None required	AC: Emergency Preparedness	Controls based on Flammable Gas JCO
08X	W320-B-TRANS15	Large high energy aerosolized waste release from Tank 241-AY-102 to the atmosphere due to air injected into the waste from the startup of slurry flow from the distributor. Gas is scrubbed from the waste and LFL is reached in dome space. It is then ignited resulting in a dome space fire.	1. Normal procedure	SC: DST ventilation	LCO: DST and AWF ventilation sys AC: Flammability cntrls AC: Ignition cntrls AC: Flammable gas mon cntrls AC: Trans cntrls (mat balance and supernate removal)	None required	AC: Emergency Preparedness	Controls based on Flammable Gas JCO

Table D-1. Safety SSCs and TSRs for Potential S3 and S2 Consequences. (58 sheets)

Rep Acc W320	ID	Hazardous Conditions	Candidate Causes	Prev SSC	Prev TSR	Mit SSC	Mit TSR	Cont Memo
08X	W320-B-TRANS16	Large high energy radioactive aerosolized waste release from Tank 241-AY-102 to the atmosphere due to distributor nozzle breaking off which results in solids piling up. Pile generates significant amount of flammable gas and LFL is reached in dome space. It is then ignited resulting in a dome space fire.	1. Primary failure of distributor 2. Severe water hammer 3. Severe thermal shock 4. Corrosion 5. Metal fatigue from vibration	SC: DST ventilation	LCO: DST and AWF ventilation sys AC: Flammability cntrls AC: Ignition cntrls AC: Flammable gas mon cntrls AC: Trans cntrls (mat balance and supernate removal)	None required	AC: Emergency Preparedness	Controls based on Flammable Gas JCO
08X	W320-B-TRANS17	Release of high energy aerosolized waste from damaged Tank 241-C-106 due to the sluicer hose breaking which then impinges into the solids releasing a region of retained flammable gas. The gas is then ignited and a plume fire results.	1. Primary failure of hose 2. Severe water hammer 3. Severe thermal shock 4. Corrosion 5. Fatigue from vibration	SC: SST ventilation	LCO: SST ventilation sys - active AC: Flammability cntrls AC: Ignition cntrls AC: Flammable gas mon cntrls AC: Trans cntrls (mat balance and supernate removal)	None required	AC: Emergency Preparedness	Controls based on Flammable Gas JCO

Table D-1. Safety SSCs and TSRs for Potential S3 and S2 Consequences. (58 sheets)

Rep Acc W320	ID	Hazardous Conditions	Candidate Causes	Prev SSC	Prev TSR	Mit SSC	Mit TSR	Cont Memo
08X	W320-B-TRANS18	Release of large high energy aerosolized waste to the atmosphere due to sluice water transfer rate being excessive resulting in the Tank 241-C-106 waste level being lowered quickly with the waste temperature too high. This results in a large steam bump and flammable gas release with a plume burn.	1. Flowmeters fault or out of calibration 2. Operator error in positioning Tank 241-C-106 pump 3. Inadvertant or accidental actuation of Tank 241-C-106 pump but not Tank 241-AY-102 pump 4. ENRAF level indication fault 5. Pump controller fault 6. Tank 241-C-106 T/C fault	SC: SST ventilation	LCO: SST ventilation sys - active AC: Flammability cntrls AC: Ignition cntrls AC: Flammable gas mon cntrls AC: Trans cntrls (mat balance and supernate removal)	None required	AC: Emergency Preparednes s	Controls based on Flammable Gas JCO
08X	W320-BCD-ALL05	Small high energy aerosolized waste release to the atmosphere due to buildup of solids and flammable gas in transfer line . Gas is then ignited resulting in a breach of transfer line. Pumping is started without knowledge of breach.	1. Low flow 2. Inadequate flushing	None	AC: Trans cntrls (configuration management)	None required	AC: Emergency Preparednes s	Controls based on Flammable Gas JCO
08X	W320-BCD-ALL06	Small high energy aerosolized waste release to the atmosphere due to buildup of solids and flammable gas in transfer line . Gas is then ignited and detonates resulting in a breach of transfer line. Pumping is started without knowledge of breach.	1. Low flow 2. Inadequate flushing	None	AC: Trans cntrls (configuration management)	None required	AC: Emergency Preparednes s	Controls based on Flammable Gas JCO

Table D-1. Safety SSCs and TSRs for Potential S3 and S2 Consequences. (58 sheets)

Rep Acc W320	ID	Hazardous Conditions	Candidate Causes	Prev SSC	Prev TSR	Mit SSC	Mit TSR	Cont Memo
08X	W320-BCD-ALL10	Small high energy aerosolized waste release to the atmosphere due to plugging and buildup of flammable gas in transfer line . Gas is then ignited resulting in a breach of transfer line. Pumping is started without knowledge of breach.	1. Low flow 2. Inadequate flushing	None	AC: Trans cntrls (configuration management)	None required	AC: Emergency Preparedness	Controls based on Flammable Gas JCO
08X	W320-BCD-PUMP03	Release of small high energy aerosol to atmosphere due to immersible pump being raised too high in Tank 241-AY-102, winch lifting strap breaking, pump falling into waste results in a flammable gas release which is ignited by broken electrical cables, plume burn.	1. Operator error in positioning direction 2. Inadvertant or accidental actuation 3. Winch controller fault	SC: DST ventilation	LCO: DST and AWF ventilation sys AC: Flammability cntrls AC: Ignition cntrls AC: Flammable gas mon cntrls AC: Trans cntrls (mat balance and supernate removal)	None required	AC: Emergency Preparedness	Controls based on Flammable Gas JCO
08X	W320-BCD-PUMP05	Release of small high energy aerosol to atmosphere due to immersible pump being raised too high in Tank 241-C-106, motor breaks gear assembly, pump freespools into waste resulting in a flammable gas release which is ignited by broken electrical cables, plume burn.	1. Operator error in positioning direction 2. Inadvertant or accidental actuation 3. Winch controller fault	SC: SST ventilation	LCO: SST ventilation sys - active AC: Flammability cntrls AC: Ignition cntrls AC: Flammable gas mon cntrls AC: Trans cntrls (mat balance and supernate removal)	None required	AC: Emergency Preparedness	Controls based on Flammable Gas JCO

Table D-1. Safety SSCs and TSRs for Potential S3 and S2 Consequences. (58 sheets)

Rep Acc W320	ID	Hazardous Conditions	Candidate Causes	Prev SSC	Prev TSR	Mit SSC	Mit TSR	Cont Memo
08X	W320-BCD-PUMP09	Release of large high energy aerosolized waste to atmosphere due to immersible pump being raised too high in Tank 241-C-106, winch lifting strap breaking, pump falling into waste results in a flammable gas release which is ignited by broken electrical cables, plume burn.	1. Operator error in positioning direction 2. Inadvertant or accidental actuation 3. Winch controller fault	SC: SST ventilation	LCO: SST ventilation sys - active AC: Flammability cntrls AC: Ignition cntrls AC: Flammable gas mon cntrls AC: Trans cntrls (mat balance and supernate removal)	None required	AC: Emergency Preparedness	Controls based on Flammable Gas JCO
08X	W320-D-ALL08	Release of energetic radioactive aerosol to atmosphere due to start of air lift circulators in Tank 241-AY-102 resulting in a release of flammable gas plume which is then ignited.	1. Human error 2. Communications error with other workers using the tank 3. IOSRs require activation of ALCs in event temperature above limit	SC: DST ventilation	LCO: DST and AWF ventilation sys AC: Flammability cntrls AC: Ignition cntrls AC: Flammable gas mon cntrls AC: Trans cntrls (mat balance and supernate removal)	None required	AC: Emergency Preparedness	Controls based on Flammable Gas JCO
08X	W320-D-PUMP04	Release of energetic radioactive aerosol from damaged Tank 241-AY-102 due to pumping of more solids than anticipated. Annulus cooling mod not completed resulting in overheating of waste and a tank bump. Bump induces large flammable gas release. It is then ignited resulting in a dome space fire.	1. Mass flowmeter fault or out of calibration 2. Operator error in positioning slurry pump 3. Inadvertant or accidental repositioning 4. Level indication fault 5. Waste level indicator on pump Tank 241-C-106 fault 6. Pump controller fault	SC: DST ventilation SC: Annulus ventilation syss	LCO: DST and AWF ventilation sys LCO: SST ventilation sys - active and passive LCO: Primary tank leak detection sys AC: Flammability cntrls AC: Ignition cntrls AC: Flammable gas mon cntrls AC: Trans cntrls (mat balance and supernate removal)	None required	AC: Emergency Preparedness	Controls based on Flammable Gas JCO

Table D-1. Safety SSCs and TSRs for Potential S3 and S2 Consequences. (58 sheets)

Rep Acc W320	ID	Hazardous Conditions	Candidate Causes	Prev SSC	Prev TSR	Mit SSC	Mit TSR	Cont Memo
08X	W320-D-TRANS05	Release of energetic radioactive aerosol to atmosphere due to head space gas concentration above LFL in Tank 241-AY-102 with the start of pumping which ignites the flammable gas.	1. Spontaneous GRE 2. Induced GRE	SC: DST ventilation	LCO: DST and AWF ventilation sys AC: Flammability cntrls AC: Ignition cntrls AC: Flammable gas mon cntrls AC: Trans cntrls (mat balance and supernate removal)	None required	AC: Emergency Preparedness	Controls based on Flammable Gas JCO
08X	W320-D-TRANS06	Release of large high energy aerosolized waste to the atmosphere due to slurry transfer rate being excessive resulting in a rapid reduction in the hydrostatic pressure in Tank 241-C-106. This results in a flammable gas release. Gas is ignited and a dome space fire results.	1. Sluice flow control fault	SC: SST ventilation	LCO: SST ventilation sys - active AC: Flammability cntrls AC: Ignition cntrls AC: Flammable gas mon cntrls AC: Trans cntrls (mat balance and supernate removal)	None required	AC: Emergency Preparedness	Controls based on Flammable Gas JCO
08X	W320-D-TRANS07	Release of high energetic aerosolized waste to the atmosphere due to sluice water transfer rate being excessive resulting in the Tank 241-AY-102 waste level being lowered quickly with the waste temperature too high. This results in a large steam bump and flammable gas release with ignition.	1. Operator mistake 2. Level indication fault 3. Pump controller fault	SC: DST ventilation	LCO: DST and AWF ventilation sys AC: Flammability cntrls AC: Ignition cntrls AC: Flammable gas mon cntrls AC: Trans cntrls (mat balance and supernate removal)	None required	AC: Emergency Preparedness	Controls based on Flammable Gas JCO

Table D-1. Safety SSCs and TSRs for Potential S3 and S2 Consequences. (58 sheets)

Rep Acc W320	ID	Hazardous Conditions	Candidate Causes	Prev SSC	Prev TSR	Mit SSC	Mit TSR	Cont Memo
08X	W320-D-VENT13	Large high energy radioactive aerosolized waste release from Tank 241-AY-102 to the atmosphere due to influx of cold water spray into tank which results in an excessive vacuum. A large flammable gas release is induced. It is then ignited resulting in a dome space fire.	1. Possible result of slurry distribution	SC: DST ventilation	LCO: DST and AWF ventilation sys AC: Flammability cntrls AC: Ignition cntrls AC: Flammable gas mon cntrls AC: Trans cntrls (mat balance and supernate removal)	None required	AC: Emergency Preparedness	Controls based on Flammable Gas JCO
08X	W320-D-VENT14	Small high energy aerosolized waste release from Tank 241-AY-102 to the atmosphere due to the loss of primary or annulus ventilation for an extended period which results in a gradual rise in waste temperature. Flammable gas leaks into annulus. It is then ignited resulting in the annulus being breached.	1. Extended loss of power 2. Severe ventilation casualty	SC: DST ventilation SC: Annulus ventilation syss	LCO: DST and AWF ventilation sys AC: Flammability cntrls AC: Ignition cntrls AC: Flammable gas mon cntrls AC: Trans cntrls (mat balance and supernate removal)	None required	AC: Emergency Preparedness	Controls based on Flammable Gas JCO

Table D-1. Safety SSCs and TSRs for Potential S3 and S2 Consequences. (58 sheets)

Rep Acc W320	ID	Hazardous Conditions	Candidate Causes	Prev SSC	Prev TSR	Mit SSC	Mit TSR	Cont Memo
08X	W320-D-VENT15	Small low energy radioactive aerosolized waste release from standpipes in Tank 241-AY-102 due to flammable gas buildup where it is ignited resulting in the pipe being breached resulting in an unfiltered release.	1. Natural occurrence under proper conditions	SC: DST ventilation	LCO: DST and AWF ventilation sys AC: Flammability cntrls AC: Ignition cntrls AC: Flammable gas mon cntrls AC: Trans cntrls (mat balance and supernate removal)	None required	AC: Emergency Preparedness	Controls based on Flammable Gas JCO
08X	W320-D-VENT16	Large high energy aerosolized waste release from Tank 241-AY-102 to the atmosphere due to the loss of primary or annulus ventilation for an extended period which results in a gradual rise in waste temperature. Flammable gas builds up in the dome space to the LFL. It is then ignited resulting in a dome space fire.	1. Extended loss of power 2. Severe ventilation casualty	SC: DST ventilation SC: Annulus ventilation syss	LCO: DST and AWF ventilation sys AC: Flammability cntrls AC: Ignition cntrls AC: Flammable gas mon cntrls AC: Trans cntrls (mat balance and supernate removal)	None required	AC: Emergency Preparedness	Controls based on Flammable Gas JCO

Table D-1. Safety SSCs and TSRs for Potential S3 and S2 Consequences. (58 sheets)

Rep Acc W320	ID	Hazardous Conditions	Candidate Causes	Prev SSC	Prev TSR	Mit SSC	Mit TSR	Cont Memo
08X	W320-D-VENT17	Release of high energy aerosolized release to the atmosphere due to an ice storm which prevents air inflow into Tank 241-AY-102 resulting in an excessive tank vacuum. This results in a flammable gas release with ignition.	1. Natural phenomena	SC: DST ventilation	LCO: DST and AWF ventilation sys AC: Flammability cntrls AC: Ignition cntrls AC: Flammable gas mon cntrls AC: Trans cntrls (mat balance and supernate removal)	None required	AC: Emergency Preparedness	Controls based on Flammable Gas JCO
08X	W320-D-VENT18	Large high energy radioactive aerosolized waste release from Tank 241-AY-102 to the atmosphere due to volcanic ashfall which prevents air inflow to tank. Excessive vacuum results and flammable gas is released to the dome space. It is then ignited resulting in a dome space fire.	1. Natural phenomena	SC: DST ventilation	LCO: DST and AWF ventilation sys AC: Flammability cntrls AC: Ignition cntrls AC: Flammable gas mon cntrls AC: Trans cntrls (mat balance and supernate removal)	None required	AC: Emergency Preparedness	Controls based on Flammable Gas JCO
08X	W320-E-TERM03	Large high energy radioactive aerosolized waste release from Tank 241-AY-102 to the atmosphere due to lack of controls on operation of tank after it has been turned into a FG group 1 tank. It is ignited from a lightning strike or other event resulting in a dome space fire.	1. Inadequate prediction of waste behavior	SC: DST ventilation	LCO: DST and AWF ventilation sys AC: Flammability cntrls AC: Ignition cntrls AC: Flammable gas mon cntrls AC: Trans cntrls (mat balance and supernate removal)	None required	AC: Emergency Preparedness	Controls based on Flammable Gas JCO

Table D-1. Safety SSCs and TSRs for Potential S3 and S2 Consequences. (58 sheets)

Rep Acc W320	ID	Hazardous Conditions	Candidate Causes	Prev SSC	Prev TSR	Mit SSC	Mit TSR	Cont Memo
09A	W320-B-ALL09	Release of energetic radioactive aerosol from damaged tank due to formation of organic layer in Tank 241-AY-102 during slurry distribution and subsequent ignition of organics.	1. Sluicing causes organic separation	None required	AC: Ign cntrls (organic solvent) AC: Trans cntrls (organic solvent)	None Required	AC: HEPA Filter cntrl program (source Term)	Controls based on accident analysis (Organic Solvent Fire)
09B	W320-B-ALL10	Release of energetic radioactive aerosol from damaged tank due to formation of organic layer in Tank 241-C-106 during sluicing and subsequent ignition of organics.	1. Sluicing causes organic separation	None required	AC: Ign cntrls (organic solvent) AC: Trans cntrls (organic solvent)	None Required	AC: HEPA Filter cntrl program (source Term)	Controls based on accident analysis (Organic Solvent Fire)
09X	W320-A-TRANS06	Release of energetic radioactive aerosol from damaged tank due to waste temperature being out of specification during start of slurry transfer in Tank 241-C-106 and subsequent ignition of organics.	1. Operator mistake 2. Temperature measurement fault	None required	AC: Ign cntrls (organic solvent)	None Required	AC: HEPA Filter cntrl program (source Term)	Controls based on accident analysis (Organic Solvent Fire)

Table D-1. Safety SSCs and TSRs for Potential S3 and S2 Consequences. (58 sheets)

Rep Acc W320	ID	Hazardous Conditions	Candidate Causes	Prev SSC	Prev TSR	Mit SSC	Mit TSR	Cont Memo
09X	W320-B-VENT08	Release of energetic radioactive aerosol from damaged tank due to loss of Tank 241-C-106 ventilation for many months, dry out of waste and subsequent ignition of organics.	1. Loss of power 2. Equipment casualty	None required	AC: Ign cntrls (organic solvent)	None Required	AC: HEPA Filter cntrl program (source Term)	Controls based on accident analysis (Organic Solvent Fire)
09X	W320-B-VENT09*	Release of energetic radioactive aerosol from damaged tank due to loss of Tank 241-AY-102 ventilation for many months, dry out of waste and subsequent ignition of organics.	1. Loss of power 2. Equipment casualty	None required	AC: Ign cntrls (organic solvent) AC: Trans cntrls (organic solvent)	None Required	AC: HEPA Filter cntrl program (source Term)	Controls based on accident analysis (Organic Solvent Fire)
10	W320-D-CHILL01	Release of energetic radioactive aerosol from damaged tank due to a leak and ignition of propylene glycol from pit chiller into Tank 241-C-106.	1. Piping or tubing leak	None required	AC: Ign cntrls	None required	AC: HEPA Filter cntrl program (source Term)	Controls based on accident analysis (In-Tank Fuel Fire/Deflagration)

Table D-1. Safety SSCs and TSRs for Potential S3 and S2 Consequences. (58 sheets)

Rep Acc W320	ID	Hazardous Conditions	Candidate Causes	Prev SSC	Prev TSR	Mit SSC	Mit TSR	Cont Memo
10X	W320-ALL-VENT01	Release of energetic radioactive aerosol from breached ventilation duct for Tank 241-AY-102 due to a buildup of ammonium nitrate in ventilation ducting and ignition via hot work, range fire etc.	1. Natural occurrence under proper conditions	None required	AC: Ign cntrls	None required	AC: HEPA Filter cntrl program (source Term)	Controls based on accident analysis (In-Tank Fuel Fire/Deflagration)
10X	W320-D-CHILL02	Release of energetic radioactive aerosol from damaged tank due to a leak and ignition of propylene glycol from ventilation chiller into Tank 241-C-106.	1. Piping or tubing leak	None required	AC: Ign cntrls	None required	AC: HEPA Filter cntrl program (source Term)	Controls based on accident analysis (In-Tank Fuel Fire/Deflagration)
10X	W320-D-VENT01	Release of energetic radioactive aerosol from filter breach due to a buildup of ammonium nitrate in ventilation ducting of Tank 241-AY-102 and ignition via hot work, range fire etc.	1. Natural occurrence under proper conditions	None required	AC: Ign cntrls	None required	AC: HEPA Filter cntrl program (source Term)	Controls based on accident analysis (In-Tank Fuel Fire/Deflagration)

Table D-1. Safety SSCs and TSRs for Potential S3 and S2 Consequences. (58 sheets)

Rep Acc W320	ID	Hazardous Conditions	Candidate Causes	Prev SSC	Prev TSR	Mit SSC	Mit TSR	Cont Memo
11	W320-D-TRANS08	Release of low energy radioactive aerosol through failed filters due to excessive fluffing of waste in Tank 241-AY-102 resulting in large steam bump and unfiltered release.	1. Inadequate prediction of waste behavior	SC: Tank 241-AY-102 annulus ventilation sys	LCS/LCO: DST and AWF Tanks waste temp cntrls AC: Trans Cntrls (mat balance and topography) AC: Proc Instr and Meas and Test Equip AC: Vent cntrls (annulus)	None required	None required	Controls based on accident analysis (Tank Bump)
11X	W320-A-TRANS01	Release of low energy radioactive aerosol through failed filters from Tank 241-C-106 due to a large steam bump	1. Flowmeters fault or out of calibration 2. Operator error in positioning Tank 241-C-106 pump 3. Inadvertant or accidental actuation of Tank 241-C-106 pump but not Tank 241-AY-102 pump 4. ENRAF level indication fault 5. Pump controller fault 6. Tank 241-C-106 T/C fault	None required	LCS/LCO: SST waste temp cntrls AC: Trans Cntrls (mat balance and topography) AC: Proc Instr and Meas and Test Equip	None required	None required	Controls based on accident analysis (Tank Bump)
11X	W320-A-TRANS02	Release of low energy radioactive aerosol through failed filters from Tank 241-AY-102 due to lowering of tank level with temperature out of spec resulting in tank bump	1. Flowmeters fault or out of calibration 2. Operator error in positioning Tank 241-C-106 pump 3. ENRAF level indication fault 4. Pump controller fault 5. Tank 241-C-106 T/C fault	SC: Tank 241-AY-102 annulus ventilation sys	LCS/LCO: DST and AWF Tanks waste temp cntrls AC: Trans Cntrls (mat balance and topography) AC: Proc Instr and Meas and Test Equip AC: Vent cntrls (annulus)	None required	None required	Controls based on accident analysis (Tank Bump)

Table D-1. Safety SSCs and TSRs for Potential S3 and S2 Consequences. (58 sheets)

Rep Acc W320	ID	Hazardous Conditions	Candidate Causes	Prev SSC	Prev TSR	Mit SSC	Mit TSR	Cont Memo
11X	W320-A-TRANS03	Release of low energy radioactive aerosol through failed filters from Tank 241-AY-102 due to high waste temperature during slurry transfer and resulting steam bump.	1. Inadvertant or accidental actuation of Tank 241-C-106 pump but not Tank 241-AY-102 pump	SC: Tank 241-AY-102 annulus ventilation sys	LCS/LCO: DST and AWF Tanks waste temp cntrls AC: Trans Cntrls (mat balance and topography) AC: Proc Instr and Meas and Test Equip AC: Vent cntrls (annulus)	None required	None required	Controls based on accident analysis (Tank Bump)
11X	W320-B-PUMP01	Release of low energy radioactive aerosol from Tank 241-AY-102 through failed filters due to overheating of waste and subsequent steam bump	1. Mass flowmeter fault or out of calibration 2. Operator error in positioning 3. Inadvertant or accidental repositioning 4. Level indication fault 5. Waste level indicator on pump fault 6. Pump controller fault	SC: Tank 241-AY-102 annulus ventilation sys	LCS/LCO: DST and AWF Tanks waste temp cntrls AC: Trans Cntrls (mat balance and topography) AC: Proc Instr and Meas and Test Equip AC: Vent cntrls (annulus)	None required	None required	Controls based on accident analysis (Tank Bump)
11X	W320-B-TRANS02	Release of low energy radioactive aerosol through failed filters from Tank 241-AY-102 due to low slurry flow, piling of waste at base of distributor and resulting tank bump	1. 3-way ball valve in flushing system not fully open 2. Pump controller fault 3. Excessive solids in sluicing flow	SC: Tank 241-AY-102 annulus ventilation sys	LCS/LCO: DST and AWF Tanks waste temp cntrls AC: Trans Cntrls (mat balance and topography) AC: Proc Instr and Meas and Test Equip AC: Vent cntrls (annulus)	None required	None required	Controls based on accident analysis (Tank Bump)

Table D-1. Safety SSCs and TSRs for Potential S3 and S2 Consequences. (58 sheets)

Rep Acc W320	ID	Hazardous Conditions	Candidate Causes	Prev SSC	Prev TSR	Mit SSC	Mit TSR	Cont Memo
11X	W320-B-TRANS03	Release of low energy radioactive aerosol through failed filters due to condensation of vapor in head space of Tank 241-C-106 which resulted from the breaking off of sluicer head.	1. Primary failure of sluicer 2. Severe water hammer 3. Severe thermal shock 4. Corrosion 5. Metal fatigue from vibration	None required	LCS/LCO: SST waste temp cntrls AC: Trans Cntrls (mat balance and topography) AC: Proc Instr and Meas and Test Equip	None required	None required	Controls based on accident analysis (Tank Bump)
11X	W320-B-TRANS04	Release of low energy radioactive aerosol through failed filters from Tank 241-C-106 due to high slurry transfer rate, high waste temperature and resulting tank bump	1. Flowmeters fault or out of calibration 2. Operator error in positioning Tank 241-C-106 pump 3. Inadvertant or accidental actuation of Tank 241-C-106 pump but not Tank 241-AY-102 pump 4. ENRAF level indication fault 5. Pump controller fault 6. Tank 241-C-106 T/C fault	None required	LCS/LCO: SST waste temp cntrls AC: Trans Cntrls (mat balance and topography) AC: Proc Instr and Meas and Test Equip	None required	None required	Controls based on accident analysis (Tank Bump)
11X	W320-B-TRANS05	Release of low energy radioactive aerosol from largely intact Tank 241-AY-102 due to buildup of solids pile under distributor as a result of low slurry flow which results in steam bump and increased head space vapor pressure.	1. 3-way ball valve in flushing system not fully open 2. Pump controller fault 3. Excessive solids in sluicing flow	SC: Tank 241-AY-102 annulus ventilation sys	LCS/LCO: DST and AWF Tanks waste temp cntrls AC: Trans Cntrls (mat balance and topography) AC: Proc Instr and Meas and Test Equip AC: Vent cntrls (annulus)	None required	None required	Controls based on accident analysis (Tank Bump)

Table D-1. Safety SSCs and TSRs for Potential S3 and S2 Consequences. (58 sheets)

Rep Acc W320	ID	Hazardous Conditions	Candidate Causes	Prev SSC	Prev TSR	Mit SSC	Mit TSR	Cont Memo
11X	W320-B-TRANS09	Release of low energy radioactive aerosol from largely intact Tank 241-AY-102 due to buildup of solids pile under distributor as a result of the distributor nozzle breaking off which results in steam bump and increased head space vapor pressure.	1. Primary failure of distributor 2. Severe water hammer 3. Severe thermal shock 4. Corrosion 5. Metal fatigue from vibration	SC: Tank 241-AY-102 annulus ventilation sys	LCS/LCO: DST and AWF Tanks waste temp cntrls AC: Trans Cntrls (mat balance and topography) AC: Proc Instr and Meas and Test Equip AC: Vent cntrls (annulus)	None required	None required	Controls based on accident analysis (Tank Bump)
11X	W320-BCD-TRANS05	Release of low energy radioactive aerosol through failed filters due to tank bump in Tank 241-AY-102 resulting from the vacuum developed in the head space from the condensation of vapor which resulted from the breaking off of distributor head.	1. Primary failure of distributor 2. Severe water hammer 3. Severe thermal shock 4. Corrosion 5. Metal fatigue from vibration	SC: Tank 241-AY-102 annulus ventilation sys	LCS/LCO: DST and AWF Tanks waste temp cntrls AC: Trans Cntrls (mat balance and topography) AC: Proc Instr and Meas and Test Equip AC: Vent cntrls (annulus)	None required	None required	Controls based on accident analysis (Tank Bump)
11X	W320-BCD-TRANS06	Release of low energy radioactive aerosol through failed filters of Tank 241-AY-102 due to tank bump resulting from the which resulted from the breaking off of distributor head.	1. Primary failure of distributor 2. Severe water hammer 3. Severe thermal shock 4. Corrosion 5. Metal fatigue from vibration	SC: Tank 241-AY-102 annulus ventilation sys	LCS/LCO: DST and AWF Tanks waste temp cntrls AC: Trans Cntrls (mat balance and topography) AC: Proc Instr and Meas and Test Equip AC: Vent cntrls (annulus)	None required	None required	Controls based on accident analysis (Tank Bump)

Table D-1. Safety SSCs and TSRs for Potential S3 and S2 Consequences. (58 sheets)

Rep Acc W320	ID	Hazardous Conditions	Candidate Causes	Prev SSC	Prev TSR	Mit SSC	Mit TSR	Cont Memo
11X	W320-BCD-TRANS07	Release of low energy radioactive aerosol through failed filters of Tank 241-C-106 due to failure of T/C Tree, sluicing outside of temperature specs, atmospheric change, and large steam bump resulting in filter breach.	1. Sluice flow control fault 2. Operator error	None required	LCS/LCO: SST waste temp cntrls AC: Trans Cntrls (mat balance and topography) AC: Proc Instr and Meas and Test Equip	None required	None required	Controls based on accident analysis (Tank Bump)
11X	W320-BCD-TRANS08	Release of low energy radioactive aerosol through failed filters from Tank 241-C-106 due to undetected high waste temperature and resulting tank bump	1. Expected outcome of high pressure sluice. Many objects are in the waste.	None required	LCS/LCO: SST waste temp cntrls AC: Trans Cntrls (mat balance and topography) AC: Proc Instr and Meas and Test Equip	None required	None required	Controls based on accident analysis (Tank Bump)
11X	W320-D-ALL02	Release of low energy radioactive aerosol through failed filters from Tank 241-AY-102 due to barometric pressure change, high waste temperature and resulting tank bump	1. Ventilation balance upset 2. Sudden barometric pressure change 3. Low intensity seismic event	SC: Tank 241-AY-102 annulus ventilation sys	LCS/LCO: DST and AWF Tanks waste temp cntrls AC: Trans Cntrls (mat balance and topography) AC: Proc Instr and Meas and Test Equip AC: Vent cntrls (annulus)	None required	None required	Controls based on accident analysis (Tank Bump)

Table D-1. Safety SSCs and TSRs for Potential S3 and S2 Consequences. (58 sheets)

Rep Acc W320	ID	Hazardous Conditions	Candidate Causes	Prev SSC	Prev TSR	Mit SSC	Mit TSR	Cont Memo
11X	W320-D-ALL03	Release of low energy radioactive aerosol from Tank 241-AY-102 through failed filters due to bump in interconnected tank resulting in a tank bump and filter breach.	1. Ventilation balance upset 2. Sudden barometric pressure change 3. Low intensity seismic event	SC: Tank 241-AY-102 annulus ventilation sys	LCS/LCO: DST and AWF Tanks waste temp cntrls AC: Trans Cntrls (mat balance and topography) AC: Proc Instr and Meas and Test Equip AC: Vent cntrls (annulus)	None required	None required	Controls based on accident analysis (Tank Bump)
11X	W320-D-ALL04	Release of low energy radioactive aerosol from Tank 241-AY-102 through failed filters due to bump in interconnected tank resulting in a tank bump and filter breach.	1. Ventilation balance upset 2. Sudden barometric pressure change 3. Low intensity seismic event	SC: Tank 241-AY-102 annulus ventilation sys	LCS/LCO: DST and AWF Tanks waste temp cntrls AC: Trans Cntrls (mat balance and topography) AC: Proc Instr and Meas and Test Equip AC: Vent cntrls (annulus)	None required	None required	Controls based on accident analysis (Tank Bump)
11X	W320-D-ALL05	Release of low energy radioactive aerosol through failed filters from Tank 241-AY-102 due to long term loss of ventilation system resulting in tank bump and blowout of filters.	1. Loss of power 2. Equipment casualty	SC: Tank 241-AY-102 annulus ventilation sys	LCS/LCO: DST and AWF Tanks waste temp cntrls AC: Trans Cntrls (mat balance and topography) AC: Proc Instr and Meas and Test Equip AC: Vent cntrls (annulus)	None required	None required	Controls based on accident analysis (Tank Bump)

Table D-1. Safety SSCs and TSRs for Potential S3 and S2 Consequences. (58 sheets)

Rep Acc W320	ID	Hazardous Conditions	Candidate Causes	Prev SSC	Prev TSR	Mit SSC	Mit TSR	Cont Memo
11X	W320-D-TRANS01	Release of low energy radioactive aerosol through failed filters from Tank 241-AY-102 due to rapid waste level change, high waste temperature and resulting tank bump	1. Flowmeters fault or out of calibration 2. Operator error in positioning Tank 241-AY-102 pump 3. Inadvertant or accidental actuation of Tank 241-AY-102 pump but not Tank 241-C-106 pump 4. ENRAF level indication fault 5. Pump controller fault	SC: Tank 241-AY-102 annulus ventilation sys	LCS/LCO: DST and AWF Tanks waste temp cntrls AC: Trans Cntrls (mat balance and topography) AC: Proc Instr and Meas and Test Equip AC: Vent cntrls (annulus)	None required	None required	Controls based on accident analysis (Tank Bump)
11X	W320-D-VENT02	Release of low energy radioactive aerosol from Tank 241-AY-102 through failed filters due to inadequate ventilation from W030 resulting in increased waste temperature, steam bump and filter breach.	1. Error in calculations 2. Design error 3. Construction fault	SC: Tank 241-AY-102 annulus ventilation sys	LCS/LCO: DST and AWF Tanks waste temp cntrls AC: Trans Cntrls (mat balance and topography) AC: Proc Instr and Meas and Test Equip AC: Vent cntrls (annulus)	None required	None required	Controls based on accident analysis (Tank Bump)
11X	W320-D-VENT03	Release of low energy radioactive aerosol through failed filters in the 702A ventilation system of Tank 241-AY-102 due to severe ice storm, excessive tank vacuum and resulting tank bump	1. Natural phenomena	SC: Tank 241-AY-102 annulus ventilation sys	LCS/LCO: DST and AWF Tanks waste temp cntrls AC: Trans Cntrls (mat balance and topography) AC: Proc Instr and Meas and Test Equip AC: Vent cntrls (annulus)	None required	None required	Controls based on accident analysis (Tank Bump)

Table D-1. Safety SSCs and TSRs for Potential S3 and S2 Consequences. (58 sheets)

Rep Acc W320	ID	Hazardous Conditions	Candidate Causes	Prev SSC	Prev TSR	Mit SSC	Mit TSR	Cont Memo
11X	W320-D-VENT05	Release of low energy radioactive aerosol through failed filters in the W030 ventilation system due to severe ice storm, excessive tank vacuum and resulting tank bump.	1. Natural phenomena	SC: Tank 241-AY-102 annulus ventilation sys	LCS/LCO: DST and AWF Tanks waste temp cntrls AC: Trans Cntrls (mat balance and topography) AC: Proc Instr and Meas and Test Equip AC: Vent cntrls (annulus)	None required	None required	Controls based on accident analysis (Tank Bump)
11X	W320-D-VENT06	Release of low energy radioactive aerosol from Tank 241-AY-102 through failed filters due to volcanic ashfall, excessive vacuum resulting in large steam bump and filter blowout.	1. Natural phenomena	SC: Tank 241-AY-102 annulus ventilation sys	LCS/LCO: DST and AWF Tanks waste temp cntrls AC: Trans Cntrls (mat balance and topography) AC: Proc Instr and Meas and Test Equip AC: Vent cntrls (annulus)	None required	None required	Controls based on accident analysis (Tank Bump)
11X	W320-D-VENT09	Release of low energy radioactive aerosol from largely intact Tank 241-AY-102 due to loss of primary or annulus ventilation which results in steam release.	1. Extended loss of power 2. Severe ventilation casualty	SC: Tank 241-AY-102 annulus ventilation sys	LCS/LCO: DST and AWF Tanks waste temp cntrls AC: Trans Cntrls (mat balance and topography) AC: Proc Instr and Meas and Test Equip AC: Vent cntrls (annulus)	None required	None required	Controls based on accident analysis (Tank Bump)

Table D-1. Safety SSCs and TSRs for Potential S3 and S2 Consequences. (58 sheets)

Rep Acc W320	ID	Hazardous Conditions	Candidate Causes	Prev SSC	Prev TSR	Mit SSC	Mit TSR	Cont Memo
11X	W320-D-VENT19	Release of low energy radioactive aerosol through failed filters due to loss of primary or annulus ventilation for extended period of time resulting in rise in waste temperature and large bump in Tank 241-AY-102.	1. Extended loss of power 2. Severe ventilation casualty	SC: Tank 241-AY-102 annulus ventilation sys	LCS/LCO: DST and AWF Tanks waste temp cntrls AC: Trans Cntrls (mat balance and topography) AC: Proc Instr and Meas and Test Equip AC: Vent cntrls (annulus)	None required	None required	Controls based on accident analysis (Tank Bump)
12	W320-ABCD-TRANS01	Release of liquid waste due to sluicer nozzle jet being directed at and breaching Tank 241-C-106 wall resulting in water leaking into liner gap where steam vapor forms and breaches tank bottom.	1. Unavoidable operator action	None required	LCS/LCO: SST Waste Temp Cntrls AC: Trans Cntrls (topog) AC: Proc Instru and Meas and Test Equip AC: Tank 241-C-106 Waste Temp Cntrls	None required	None required	Controls based on accident analysis (Steam Explosion between Steel Liner and Concrete Shell in Tank 241-C-106)
12X	W320-ABCD-ALL04	Release of liquid waste below grade and aerosol release to atmosphere due to water intrusion into Tank 241-C-106 with water level exceeding maximum operating level resulting in leakeage into liner gap, steam formation, breaching of tank bottom and steam bump.	1. Raw water leak 2. Surface water flood 3. Vent system water inleakage 4. Excessive transfer from Tank 241-AY-102 5. Water intrusion in Tank 241-C-105 that cascades over to Tank 241-C-106	SS: Tank level detection syss	LCS/LCO: SST Waste Temp Cntrls AC: Trans Cntrls (topog) AC: Proc Instru and Meas and Test Equip AC: Tank 241-C-106 Waste Temp Cntrls AC: Tank service water intru monitor prog	None required	None required	Controls based on accident analysis (Steam Explosion between Steel Liner and Concrete Shell in Tank 241-C-106) and controls from Surface Leak Resulting In Pool for water intrusion

Table D-1. Safety SSCs and TSRs for Potential S3 and S2 Consequences. (58 sheets)

Rep Acc W320	ID	Hazardous Conditions	Candidate Causes	Prev SSC	Prev TSR	Mit SSC	Mit TSR	Cont Memo
12X	W320-ABCD-ALL05	Release of liquid waste below grade and aerosol release to atmosphere due to water intrusion into Tank 241-C-106 with water level exceeding maximum operating level resulting in leakage into liner gap, steam formation, breaching of tank bottom and steam bump.	1. Raw water leak 2. Surface water flood 3. Vent system water inleakage 4. Excessive transfer from Tank 241-AY-102 5. Water intrusion in Tank 241-C-105 that cascades over to Tank 241-C-106	SS: Tank level detection syss	LCS/LCO: SST Waste Temp Cntrls AC: Trans Cntrls (topog) AC: Proc Instru and Meas and Test Equip AC: Tank 241-C-106 Waste Temp Cntrls AC: Tank service water intru monitor prog	None required	None required	Controls based on accident analysis (Steam Explosion between Steel Liner and Concrete Shell in Tank 241-C-106) and controls from Surface Leak Resulting In Pool for water intrusion
12X	W320-ABCD-TRANS02	Release of liquid waste below grade and aerosol release to atmosphere due to loss of sluicer arm control in Tank 241-C-106 resulting in jet striking tank liner with liner being breached, water leakage into liner gap, steam formation, breaching of tank bottom and steam bump.	1. Unavoidable operator action	None required	LCS/LCO: SST Waste Temp Cntrls AC: Trans Cntrls (topog) AC: Proc Instru and Meas and Test Equip AC: Tank 241-C-106 Waste Temp Cntrls	None required	None required	Controls based on accident analysis (Steam Explosion between Steel Liner and Concrete Shell in Tank 241-C-106)

Table D-1. Safety SSCs and TSRs for Potential S3 and S2 Consequences. (58 sheets)

Rep Acc W320	ID	Hazardous Conditions	Candidate Causes	Prev SSC	Prev TSR	Mit SSC	Mit TSR	Cont Memo
12X	W320-ABCD-TRANS03	Release of liquid waste below grade and aerosol release to atmosphere due to siphoning of waste from Tank 241-AY-102 after the stoppage of pumping water exceeds maximum operating level in Tank 241-C-106 resulting in water leakage into liner gap, steam formation, breaching of tank bottom and large steam bump.	1. Buildup of solids in openings 2. Equipment casualty	SS: Tank level detection syss	LCS/LCO: SST Waste Temp Cntrls AC: Trans Cntrls (topog) AC: Proc Instru and Meas and Test Equip AC: Tank 241-C-106 Waste Temp Cntrls	None required	None required	Controls based on accident analysis (Steam Explosion between Steel Liner and Concrete Shell in Tank 241-C-106) and controls from Surface Leak Resulting in Pool for level monitoring
12X	W320-ABCD-TRANS05	Release of liquid waste below grade and aerosol release to atmosphere due to sluicer hose break in Tank 241-C-106 resulting in jet striking tank liner with liner being breached, water leakage into liner gap, steam formation, and breaching of tank bottom.	1. Primary failure of hose 2. Severe water hammer 3. Fatigue from vibration	None required	LCS/LCO: SST Waste Temp Cntrls AC: Trans Cntrls (topog) AC: Proc Instru and Meas and Test Equip AC: Tank 241-C-106 Waste Temp Cntrls	None required	None required	Controls based on accident analysis (Steam Explosion between Steel Liner and Concrete Shell in Tank 241-C-106)

Table D-1. Safety SSCs and TSRs for Potential S3 and S2 Consequences. (58 sheets)

Rep Acc W320	ID	Hazardous Conditions	Candidate Causes	Prev SSC	Prev TSR	Mit SSC	Mit TSR	Cont Memo
12X	W320-ABCD-TRANS06	Release of liquid waste below grade and aerosol release to atmosphere due to sluicing arm breaking off and penetrating Tank 241-C-106 liner resulting in water leakage into liner gap, steam formation, liner breach and steam bump.	1. Primary failure of sluicer 2. Severe water hammer 3. Severe thermal shock 4. Corrosion 5. Metal fatigue from vibration	None required	LCS/LCO: SST Waste Temp Cntrls AC: Trans Cntrls (topog) AC: Proc Instru and Meas and Test Equip AC: Tank 241-C-106 Waste Temp Cntrls	None required	None required	Controls based on accident analysis (Steam Explosion between Steel Liner and Concrete Shell in Tank 241-C-106)
12X	W320-ABCD-TRANS07	Release of liquid waste below grade and aerosol release to atmosphere due to sluicer flow being excessive in Tank 241-C-106 resulting in jet striking tank liner with liner being breached, water leakage under tank bottom, steam formation, breaching of tank bottom and large steam bump.	1. Sluice flow control fault 2. Operator error	None required	LCS/LCO: SST Waste Temp Cntrls AC: Trans Cntrls (topog) AC: Proc Instru and Meas and Test Equip AC: Tank 241-C-106 Waste Temp Cntrls	None required	None required	Controls based on accident analysis (Steam Explosion between Steel Liner and Concrete Shell in Tank 241-C-106)
12X	W320-ABCD-TRANS08	Release of liquid waste below grade and aerosol release to atmosphere due to sluicer flow excessive into Tank 241-C-106 with water level exceeding maximum operating level resulting in leakage into liner gap, steam formation, breaching of tank bottom and large steam bump.	1. Sluice flow control fault 2. Operator error	None required	LCS/LCO: SST Waste Temp Cntrls AC: Trans Cntrls (topog) AC: Proc Instru and Meas and Test Equip AC: Tank 241-C-106 Waste Temp Cntrls	None required	None required	Controls based on accident analysis (Steam Explosion between Steel Liner and Concrete Shell in Tank 241-C-106)

Table D-1. Safety SSCs and TSRs for Potential S3 and S2 Consequences. (58 sheets)

Rep Acc W320	ID	Hazardous Conditions	Candidate Causes	Prev SSC	Prev TSR	Mit SSC	Mit TSR	Cont Memo
12X	W320-ABCD-TRANS09	Release of liquid waste below grade and aerosol release to atmosphere due to excessive waste temperature change rate Tank 241-C-106 liner breaches, resulting in water leakage under tank bottom, steam formation, breaching of tank bottom and large steam bump.	1. High temperature in Tank 241-AY-102	None required	LCS/LCO: SST Waste Temp Cntrls AC: Trans Cntrls (topog) AC: Proc Instru and Meas and Test Equip AC: Tank 241-C-106 Waste Temp Cntrls	None required	None required	Controls based on accident analysis (Steam Explosion between Steel Liner and Concrete Shell in Tank 241-C-106)
12X	W320-BCD-ALL07	Release of liquid waste below grade and aerosol release to atmosphere due to water intrusion into Tank 241-C-105 which travels through cascade line into Tank 241-C-106 with water level exceeding maximum operating level resulting in leakage into liner gap, steam formation, bulging of tank bottom, ripping of liner and steam bump.	1. Raw water leak 2. Surface water flood	SS: Tank level detection syss	LCS/LCO: SST Waste Temp Cntrls AC: Trans Cntrls (topog) AC: Proc Instru and Meas and Test Equip AC: Tank 241-C-106 Waste Temp Cntrls	None required	None required	Controls based on accident analysis (Steam Explosion between Steel Liner and Concrete Shell in Tank 241-C-106) and controls from Surface Leak Resulting in Pool for level monitoring

Table D-1. Safety SSCs and TSRs for Potential S3 and S2 Consequences. (58 sheets)

Rep Acc W320	ID	Hazardous Conditions	Candidate Causes	Prev SSC	Prev TSR	Mit SSC	Mit TSR	Cont Memo
12X	W320-BCD-ALL08	Release of liquid waste below grade and aerosol release to atmosphere due to excessive corrosion because of waste disturbance in Tank 241-C-106 resulting in leakage into liner gap, steam formation, breaching of tank bottom and steam bump.	1. Inadequate prediction of waste behavior	None required	LCS/LCO: SST Waste Temp Cntrls AC: Trans Cntrls (topog) AC: Proc Instru and Meas and Test Equip AC: Tank 241-C-106 Waste Temp Cntrls	None required	None required	Controls based on accident analysis (Steam Explosion between Steel Liner and Concrete Shell in Tank 241-C-106)
12X	W320-BCD-PUMP08	Release of liquid waste below grade and aerosol release to atmosphere due to submersible pump being raised too high, winch lifting strap breaking, pump falling and penetrating Tank 241-C-106 liner resulting in water leakage into liner gap, steam formation, liner bulges/rips and steam bump occurs.	1. Operator error in positioning direction 2. Inadvertant or accidental actuation 3. Winch controller fault	None required	LCS/LCO: SST Waste Temp Cntrls AC: Trans Cntrls (topog) AC: Proc Instru and Meas and Test Equip AC: Tank 241-C-106 Waste Temp Cntrls	None required	None required	Controls based on accident analysis (Steam Explosion between Steel Liner and Concrete Shell in Tank 241-C-106)

Table D-1. Safety SSCs and TSRs for Potential S3 and S2 Consequences. (58 sheets)

Rep Acc W320	ID	Hazardous Conditions	Candidate Causes	Prev SSC	Prev TSR	Mit SSC	Mit TSR	Cont Memo
12X	W320-BCD-TRANS09	Release of liquid waste below grade and aerosol release to atmosphere due to loss of pumping from Tank 241-C-106 and continued pumping of Tank 241-AY-102 water exceeds maximum operating level resulting in water leakage into liner gap, steam formation, breaching of tank bottom and large steam bump.	1. Loss of power 2. Equipment casualty	SS: Tank level detection syss	LCS/LCO: SST Waste Temp Cntrls AC: Trans Cntrls (topog) AC: Proc Instru and Meas and Test Equip AC: Tank 241-C-106 Waste Temp Cntrls	None required	None required	Controls based on accident analysis (Steam Explosion between Steel Liner and Concrete Shell in Tank 241-C-106) and controls from Surface Leak Resulting in Pool for level monitoring
12X	W320-D-ALL09	Release of liquid waste below grade and aerosol release to atmosphere due to seismic event Tank 241-C-106 liner is breached resulting in water leakage into liner gap, steam formation, breaching of tank bottom and large steam bump.	1. Natural Phenomena	None required	LCS/LCO: SST Waste Temp Cntrls AC: Trans Cntrls (topog) AC: Proc Instru and Meas and Test Equip AC: Tank 241-C-106 Waste Temp Cntrls	None required	AC: Emergency prep (seismic)	Controls based on accident analysis (Steam Explosion between Steel Liner and Concrete Shell in Tank 241-C-106)

Table D-1. Safety SSCs and TSRs for Potential S3 and S2 Consequences. (58 sheets)

Rep Acc W320	ID	Hazardous Conditions	Candidate Causes	Prev SSC	Prev TSR	Mit SSC	Mit TSR	Cont Memo
12X	W320-D-TRANS09	Release of liquid waste below grade and aerosol release to atmosphere due to movement of debris during sluicing which impacts and breaches the Tank 241-C-106 liner, resulting in water leakage into liner gap, steam formation, breaching of tank bottom and steam bump.	1. Expected outcome of high pressure sluice. Many objects are in the waste.	None required	LCS/LCO: SST Waste Temp Cntrls AC: Trans Cntrls (topog) AC: Proc Instru and Meas and Test Equip AC: Tank 241-C-106 Waste Temp Cntrls	None required	None required	Controls based on accident analysis (Steam Explosion between Steel Liner and Concrete Shell in Tank 241-C-106)
12X	W320-F-TERM05	Release of liquid waste below grade and aerosol release to atmosphere due to high heat load after completion of sluicing process resulting in the need for water addition to Tank 241-C-106 with a deteriorated tank liner, water leakage into liner gap, steam formation, liner breach and steam bump.	1. Error in calculations	None required	LCS/LCO: SST Waste Temp Cntrls AC: Trans Cntrls (topog) AC: Proc Instru and Meas and Test Equip AC: Tank 241-C-106 Waste Temp Cntrls	None required	None required	Controls based on accident analysis (Steam Explosion between Steel Liner and Concrete Shell in Tank 241-C-106)
13X	W320-B-ALL11	Release of liquid waste due to large water intrusion into Tank 241-C-106 resulting in high hydrostatic pressure and tank breach.	1. Raw water leak 2. Surface water flood 3. Vent system water inleakage 4. Excessive transfer from Tank 241-AY-102 5. Water intrusion in Tank 241-C-105 that cascades over to Tank 241-C-106	None required	AC: Trans cntrls (config/route verif and indep trans route verif) AC: Encasement seal loop cntrls AC: Trans Pump Admin Lock Cntrls AC: Tank service water intru monitor prog	SS: Tank level detection syss	LCO: Trans leak detect syss AC: Trans cntrls (mat bal)	Controls based on accident analysis (Subsurface Leak Remaining Subsurface)

Table D-1. Safety SSCs and TSRs for Potential S3 and S2 Consequences. (58 sheets)

Rep Acc W320	ID	Hazardous Conditions	Candidate Causes	Prev SSC	Prev TSR	Mit SSC	Mit TSR	Cont Memo
14	W320-B-TRANS22	Release of radioactive liquid from transfer line due to local flooding during transfer which results in line being uncovered and breached.	1. Raw water leak 2. Natural flow	SC: Pipe encasements	AC: Trans cntrls (config/route verif and indep trans route verif)	SC: Tank level detection syss	AC: Emergency Preparednes s	Controls based on accident analysis (Subsurface Leak Resulting in Pool)
15A	W320-B-FLUSH06	Release of radioactive liquid from transfer line due to a pipe break in Tank 241-AY-102 pit with the high capactiy drain cover on resulting in overflow of pit onto the ground.	1. Equipment failure 2. Maintenance or assembly error	SC: Leak detectors in interfacing pits and their alarms	AC: Trans cntrls (commun/config/r oute ver/caps-blanks) AC: Trans pump admin lock cntrls	SC: Trans sys covers SC: Trans leak detector alarms SS: Tank level detection syss	LCO: Trans leak detect syss AC: Trans cntrls (mat balance) AC: Emergency prep (leak) C: Trans sys cover removal cntrls	Controls based on accident analysis (Surface Leak Resulting in Pool)
15B	W320-BCD-TRANS10	Release of radioactive liquid release from sluice transfer line due to the blank flange being left off flushing connection in Tank 241-AY-102 pit and drain cover left on resulting in overflow of pit onto the ground during sluicing.	1. Maintenance error 2. Communications error between different groups using the pit	SC: Leak detectors in interfacing pits and their alarms SS: Primary tank leak detection sys	AC: Trans cntrls (commun/config/r oute ver/caps-blanks)	SC: Trans sys covers SC: Trans leak detector alarms	LCO: Trans leak detect syss AC: Trans cntrls (mat balance) AC: Emergency prep (leak) AC: Trans sys cover removal cntrls	Controls based on accident analysis (Surface Leak Resulting in Pool)
15X	W320-ABCD-ALL07	Release of radioactive liquid from Tank 241-C-106 onto the ground due to large water intrusion into tank.	1. Raw water leak 2. Surface water flood 3. Vent system water inleakage 4. Excessive transfer from Tank 241-AY-102 5. Water intrusion in Tank 241-C-105 that cascades over to Tank 241-C-106	None required	AC: Tank service water intru monitor prog	SS: Tank level detection syss	AC: Emergency prep (leak)	Controls based on accident analysis (Surface Leak Resulting in Pool)

Table D-1. Safety SSCs and TSRs for Potential S3 and S2 Consequences. (58 sheets)

Rep Acc W320	ID	Hazardous Conditions	Candidate Causes	Prev SSC	Prev TSR	Mit SSC	Mit TSR	Cont Memo
15X	W320-ABCD-ALL08*	Release of radioactive liquid from Tank C-106 due to siphoning of waste from Tank 241-AY-102 into Tank 241-C-106	1. Plugging of antisiphon holes 2. Loss of electrical power to the pumps 3. Shutdown from operations	SC: Leak detectors in interfacing pits and their alarms	AC: Trans cntrls (commun/config/route ver/caps-blanks) AC: Trans pump admin lock cntrls	SC: Trans sys covers SC: Trans leak detector alarms SS: Tank level detection syss	LCO: Trans leak detect syss AC: Trans cntrls (mat balance) AC: Emergency prep (leak) AC: Trans sys cover removal cntrls	Controls based on accident analysis (Surface Leak Resulting in Pool)
15X	W320-B-ALL13	Release of radioactive liquid from Tank 241-AY-102 due to large water intrusion into tank	1. Raw water leak 2. Surface water flood 3. Vent system water inleakage	None required	AC: Tank service water intru monitor prog	SS: Tank level detection syss	AC: Emergency prep (leak)	Controls based on accident analysis (Surface Leak Resulting in Pool)
15X	W320-B-FLUSH07	Release of radioactive liquid from transfer line due to pipe break in pit during flushing and drain plug cover on resulting in overflow of pit onto the ground.	1. Equipment failure 2. Maintenance or assembly error	SC: Leak detectors in interfacing pits and their alarms	AC: Trans cntrls (commun/config/route ver/caps-blanks) AC: Tank service water intru monitor prog	SC: Trans sys covers SC: Trans leak detector alarms SS: Tank level detection syss	LCO: Trans leak detect syss AC: Trans cntrls (mat balance) AC: Emergency prep (leak) AC: Trans sys cover removal cntrls	Controls based on accident analysis (Surface Leak Resulting in Pool)
16A	W320-BCD-TRANS11	Release of energetic radioactive aerosol from transfer line due to blank flange left off flushing connection in Tank 241-C-106 pit after flushing. Cover plug is lifted out of cover block on initiation of sluicing process.	1. Maintenance error 2. Communications error between different groups using the pit	None required	LCO: Trans cntrls (config man/route ver) AC: Trans pump admin lock cntrls	SC: Trans sys covers	LCO: Trans sys covers AC: Trans sys cover removal cntrls	Controls based on accident analysis (Spray Leak in Structure or from Overground Waste Transfer Lines)

Table D-1. Safety SSCs and TSRs for Potential S3 and S2 Consequences. (58 sheets)

Rep Acc W320	ID	Hazardous Conditions	Candidate Causes	Prev SSC	Prev TSR	Mit SSC	Mit TSR	Cont Memo
16B	W320-BCD-TRANS12	Release of energetic radioactive aerosol from transfer line due to blank flange left off flushing connection in Tank 241-AY-102 pit after flushing. Cover plug is lifted out of cover block on initiation of sluicing process.	1. Maintenance error 2. Communications error between different groups using the pit	SC: Pipe-in-pipe encasements	LCO: Trans cntrls (config man/route ver) AC: Trans pump admin lock cntrls	SC: Trans sys covers	LCO: Trans sys covers AC: Trans sys cover removal cntrls	Controls based on accident analysis (Spray Leak in Structure or from Overground Waste Transfer Lines)
16X	W320-ABCD-TRANS11 *	Release of energetic radioactive aerosol from transfer line in pit due to flammable gas collecting in pit and being ignited. Cover block lifted and falls onto piping in pit resulting in spray release.	1. Chimney through deep drop legs 2. 6 in. high capacity drain to dome space 3. Pit sealed to minimize inleakage	SC: SST ventilation SC: DST ventilation	LCO: DST and AWF ventilation sys LCO: SST ventilation sys - active AC: Flammability cntrls AC: Ignition cntrls AC: Flammable gas mon cntrls AC: Trans cntrls (mat balance and supernate removal)	None required	AC: Emergency Preparedness	Controls based on analysis for Flammable Gas Deflagration
16X	W320-ABCD-TRANS12	Release of energetic radioactive aerosol from line break due to pipe or jumper breach in distributor pit of Tank 241-AY-102 with cover block off during slurry transfer.	1. Pipe failure 2. Improper Assembly 3. Other operators change jumper hookup 4. Connector faults	None required	LCO: Trans cntrls (config man/route ver)	SC: Trans sys covers	LCO: Trans sys covers AC: Trans sys cover removal cntrls	Controls based on accident analysis (Spray Leak in Structure or from Overground Waste Transfer Lines)

Table D-1. Safety SSCs and TSRs for Potential S3 and S2 Consequences. (58 sheets)

Rep Acc W320	ID	Hazardous Conditions	Candidate Causes	Prev SSC	Prev TSR	Mit SSC	Mit TSR	Cont Memo
16X	W320-B-TRANS23	Release of energetic radioactive aerosol from line break due to pipe or jumper breach in pump pit of Tank 241-AY-102 with cover block off during sluicing.	1. Pipe failure 2. Improper Assembly 3. Other operators change jumper hookup 4. Connector faults	None required	LCO: Trans cntrls (config man/route ver) AC: Trans pump admin lock cntrls	SC: Trans sys covers	LCO: Trans sys covers AC: Trans sys cover removal cntrls	Controls based on accident analysis (Spray Leak in Structure or from Overground Waste Transfer Lines)
16X	W320-B-TRANS24	Release of energetic radioactive aerosol from line break due to pipe or jumper breach in pump pit of Tank 241-C-106 with cover block off.	1. Pipe failure 2. Improper Assembly 3. Other operators change jumper hookup 4. Connector faults	None required	LCO: Trans cntrls (config man/route ver) AC: Trans pump admin lock cntrls	SC: Trans sys covers	LCO: Trans sys covers AC: Trans sys cover removal cntrls	Controls based on accident analysis (Spray Leak in Structure or from Overground Waste Transfer Lines)
16X	W320-B-TRANS25	Release of energetic radioactive aerosol from line break due to pipe or jumper breach in sluice pit of Tank 241-C-106 with cover block off.	1. Pipe failure 2. Improper Assembly 3. Other operators change jumper hookup 4. Connector faults	None required	LCO: Trans cntrls (config man/route ver) AC: Trans pump admin lock cntrls	SC: Trans sys covers	LCO: Trans sys covers AC: Trans sys cover removal cntrls	Controls based on accident analysis (Spray Leak in Structure or from Overground Waste Transfer Lines)
16X	W320-B-TRANS26	Release of energetic radioactive aerosol from transfer line in Tank 241-C-106 pit due to flammable gas collecting in pit and being ignited. Cover block lifted and falls onto piping in pit resulting in spray release.	1. Chimney through deep drop legs 2. 6 in. high capacity drain to dome space 3. Pit sealed to minimize inleakage	SC: SST ventilation	LCO: SST ventilation sys - active AC: Flammability cntrls AC: Ignition cntrls AC: Flammable gas mon cntrls AC: Trans cntrls (mat balance and supernate removal)	None required	AC: Emergency Preparedness	Controls based on analysis for Flammable Gas Deflagration

Table D-1. Safety SSCs and TSRs for Potential S3 and S2 Consequences. (58 sheets)

Rep Acc W320	ID	Hazardous Conditions	Candidate Causes	Prev SSC	Prev TSR	Mit SSC	Mit TSR	Cont Memo
16X	W320-B-TRANS27	Release of energetic radioactive aerosol from transfer line in pit due to flammable gas collecting in pit and being ignited. Cover block lifted and falls onto piping in pit resulting in spray release.	1. Chimney through deep drop legs 2. 6 in. high capacity drain to dome space 3. Pit sealed to minimize inleakage	SC: SST ventilation SC: DST ventilation	LCO: DST and AWF ventilation sys LCO: SST ventilation sys - active and passive AC: Flammability cntrls AC: Ignition cntrls AC: Flammable gas mon cntrls AC: Trans cntrls (mat balance and supernate removal)	None required	AC: Emergency Preparedness	Controls based on analysis for Flammable Gas Deflagration
16X	W320-B-TRANS28	Release of radioactive aerosol from covered pit due to jumper or pipe breach in Tank 241-AY-102 distributor pit resulting in spray release from pit.	1. Pipe failure 2. Improper Assembly 3. Other operators change jumper hookup 4. Connector faults	None required	LCO: Trans cntrls (config man/route ver) AC: Trans pump admin lock cntrls	SC: Trans sys covers	LCO: Trans sys covers AC: Trans sys cover removal cntrls	Controls based on accident analysis (Spray Leak in Structure or from Overground Waste Transfer Lines)
16X	W320-B-TRANS29	Release of radioactive aerosol from covered pit due to jumper or pipe breach in Tank 241-AY-102 pump pit resulting in spray release from pit.	1. Pipe failure 2. Improper Assembly 3. Other operators change jumper hookup 4. Connector faults	None required	LCO: Trans cntrls (config man/route ver) AC: Trans pump admin lock cntrls	SC: Trans sys covers	LCO: Trans sys covers AC: Trans sys cover removal cntrls	Controls based on accident analysis (Spray Leak in Structure or from Overground Waste Transfer Lines)
16X	W320-B-TRANS30	Release of radioactive aerosol from covered pit due to jumper or pipe breach in Tank 241-C-106 pump pit resulting in spray release from pit.	1. Pipe failure 2. Improper Assembly 3. Other operators change jumper hookup 4. Connector faults	None required	LCO: Trans cntrls (config man/route ver) AC: Trans pump admin lock cntrls	SC: Trans sys covers	LCO: Trans sys covers AC: Trans sys cover removal cntrls	Controls based on accident analysis (Spray Leak in Structure or from Overground Waste Transfer Lines)

Table D-1. Safety SSCs and TSRs for Potential S3 and S2 Consequences. (58 sheets)

Rep Acc W320	ID	Hazardous Conditions	Candidate Causes	Prev SSC	Prev TSR	Mit SSC	Mit TSR	Cont Memo
16X	W320-B-TRANS31	Release of radioactive aerosol from covered pit due to jumper or pipe breach in Tank 241-C-106 sluice pit resulting in spray release from pit.	1. Pipe failure 2. Improper Assembly 3. Other operators change jumper hookup 4. Connector faults	None required	LCO: Trans cntrls (config man/route ver) AC: Trans pump admin lock cntrls	SC: Trans sys covers	LCO: Trans sys covers AC: Trans sys cover removal cntrls	Controls based on accident analysis (Spray Leak in Structure or from Overground Waste Transfer Lines)
16X	W320-BCD-FLUSH01	Release of energetic radioactive aerosol from transfer line due to 3 way valve left in flush position after flushing. Cover plug is lifted out of cover block on initiation of sluicing process.	1. Maintenance error 2. Communications error between different groups using the pit	SS: Backflow preventers	LCO: Trans cntrls (config man/route ver) AC: Trans pump admin lock cntrls	SC: Stack CAM and interlk SC: Trans sys covers	LCO: Trans sys covers AC: Trans sys cover removal cntrls	Controls based on accident analysis (Spray Leak in Structure or from Overground Waste Transfer Lines)
16X	W320-BCD-FLUSH02*	Release of energetic radioactive aerosol from flush tank of transfer truck due to start of submersible pump in Tank 241-C-106 during the flush of slurry transfer line. Flush tank is filled and pressurized resulting in rupture of tank or transfer line.	1. Human error 2. Communications error between different groups	SS: Backflow preventers	LCO: Trans cntrls (config man/route ver) AC: Trans pump admin lock cntrls	None required	None required	Controls based on accident analysis (Spray Leak in Structure or from Overground Waste Transfer Lines)

Table D-1. Safety SSCs and TSRs for Potential S3 and S2 Consequences. (58 sheets)

Rep Acc W320	ID	Hazardous Conditions	Candidate Causes	Prev SSC	Prev TSR	Mit SSC	Mit TSR	Cont Memo
16X	W320-BCD-TRANS13	Release of energetic radioactive aerosol from transfer line due to blank flange left off flushing connection and 3 way valve left in flush position after flushing. Cover plug remains in place on initiation of sluicing process. High capacity drain cover left on and pit overflows.	1. Maintenance error 2. Communications error between different groups using the pit	None required	LCO: Trans cntrls (config man/route ver) AC: Trans pump admin lock cntrls	SC: Trans sys covers	LCO: Trans sys covers AC: Trans sys cover removal cntrls	Controls based on accident analysis (Spray Leak in Structure or from Overground Waste Transfer Lines)
16X	W320-D-PUMP01	Release of energetic radioactive aerosol from line break in Tank 241-AY-102 transfer pit due to immersible pump being positioned too high resulting in air entrainment in transfer line. Booster pump torques in reaction to air in transfer line and jumper connectors break. Cover block is off.	1. Operator error in positioning 2. Inadvertant or accidental repositioning 3. Level indication fault 4. Waste level indicator on pump fault	None required	LCO: Trans cntrls (config man/route ver) AC: Trans pump admin lock cntrls	SC: Trans sys covers	LCO: Trans sys covers AC: Trans sys cover removal cntrls	Controls based on accident analysis (Spray Leak in Structure or from Overground Waste Transfer Lines)

Table D-1. Safety SSCs and TSRs for Potential S3 and S2 Consequences. (58 sheets)

Rep Acc W320	ID	Hazardous Conditions	Candidate Causes	Prev SSC	Prev TSR	Mit SSC	Mit TSR	Cont Memo
16X	W320-D-PUMP03	Release of energetic radioactive aerosol from line break in Tank 241-C-106 transfer pit due to immersible pump being positioned too high resulting in air entrainment in transfer line. Booster pump torques in reaction to air in transfer line and jumper connectors break. Cover block is off.	1. Operator error in positioning 2. Inadvertant or accidental repositioning 3. Level indication fault 4. Waste level indicator on pump fault	None required	LCO: Trans cntrls (config man/route ver) AC: Trans pump admin lock cntrls	SC: Trans sys covers	LCO: Trans sys covers AC: Trans sys cover removal cntrls	Controls based on accident analysis (Spray Leak in Structure or from Overground Waste Transfer Lines)
16X	W320-D-TRANS10	Release of energetic radioactive aerosol from jumper in pit due to seismic event. Cover block breached by ground motion resulting in spray release.	1. Natural Phenomena	None required	None required	SC: Trans sys covers	LCO: Trans sys covers AC: Trans sys cover removal cntrls AC: Emergency prep (seismic)	Controls based on accident analysis (Spray Leak in Structure or from Overground Waste Transfer Lines)
17	W320-D-TRANS11	Release of large high energy aerosolized radioactive waste to the atmosphere from a spray leak from transfer line due to seismic event.	1. Natural Phenomena	None required	None	None required	AC: Emergency prep (seismic)	Controls based on accident analysis (Spray Leak from Underground Waste Transfer Lines)

Table D-1. Safety SSCs and TSRs for Potential S3 and S2 Consequences. (58 sheets)

Rep Acc W320	ID	Hazardous Conditions	Candidate Causes	Prev SSC	Prev TSR	Mit SSC	Mit TSR	Cont Memo
17X	W320-B-TRANS32	Release of large high energy aerosolized radioactive waste from a spray leak from transfer line break due to aircraft strike on underground transfer line berm.	1. Light aircraft crash	None required	None required	None required	None required	No controls required based on TWRS BIO assigned frequency of FO for aircraft crash.
18A	W320-D-ALL06	Release of a small amount of low energy aerosolized waste through failed filters due to seismic event which induces a steam bump in Tank 241-AY-102, and failure of filters or ducting.	1. Natural Phenomena	None required	None required	None required	AC: Emergency prep (seismic)	Controls based on accident analysis (Natural Phenomena - Seismic)

Table D-1. Safety SSCs and TSRs for Potential S3 and S2 Consequences. (58 sheets)

Rep Acc W320	ID	Hazardous Conditions	Candidate Causes	Prev SSC	Prev TSR	Mit SSC	Mit TSR	Cont Memo
18F	W320-ALL-TRANS02	Release of small high energy aerosolized waste due to high winds or tornado resulting in failed ventilation ducting and unfiltered release.	1. Natural occurrence under proper conditions	None required	None required	SS: CAM interlk on 702-A ventilation sys SS: CAM interlk on W-030 ventilation sys SS: CAM interlk on 296-P-16 ventilation sys SS: CAM interlk on 296-C-006 ventilation sys	LCO: Ventilation stack CAM interlk syss AC: HEPA Filter cntrls (source term)	Controls based on HEPA Filter Failure - exposure to high temperature or pressure. Hazardous condition could result in damage or destruction of HEPA filters necessitating source term control. Indication of failure comes from CAMs. Additional controls are provided by DID for same accident in the Delta P alarms and interlocks.
18F	W320-B-ALL14	Release of small low energy aerosolized waste to the atmosphere from intact pit due to high winds/dust devils during plug removal from pit cover.	1. High winds	None required	AC: Dome loading cntrls (high wind)	None required	None required	Controls base on accident analysis (Natural Phenomena - High Wind)

AC = Administrative Control
AWF = Aging Waste Facility
DST = double-shell tank
HEPA = high-efficiency particulate air (filter)
JCO = Justification for Continued Operation
LCO = limiting condition for operation
LCS = limiting control setting
LFL = lower flammability limit
SC = Safety-Class
SST = single-shell tank
T/C = thermocouple

Table D-2. Safety SSCs and TSRs for Potentially Severe (E3 and E2) Environmental Consequences. (22 sheets)

ID	Hazardous Conditions	Candidate Causes	Prev SSC	Prev TSR	Mit SSC	Mit TSR	Cont Memo
ANALYZED ACCIDENT: 5 - Caustic Spray Leak	This accident is analyzed and the results presented in the current BIO. An additional control has been included for Sodium Hydroxide cargo tanks to meet applicable DOT specifications.		None required	AC: Caustic trans cntrls (sleeving - system pressure - piping thickness - cargo tank DOT specifications)	None required	None required	No specific TSR controls were identified because the hazard is solely toxicological. A non-TSR control is established requiring 4 mil thickness plastic sleeving around delivery piping; limitation on the caustic delivery system to be less than or equal to 125 psi, and use of schedule 10 steel pipe as a minimum thickness for caustic delivery if used.
W320-A-TRANS04	Release of large high energy aerosolized waste from Tank 241-C-106 due to high waste temperature during slurry transfer which results in a steam bump. Bump induces flammable gas release which is ignited resulting in a dome burn.	1. Flowmeters fault or out of calibration 2. Operator error in positioning Tank 241-C-106 pump 3. Inadvertant or accidental actuation of Tank 241-C-106 pump but not Tank 241-AY-102 pump 4. ENRAF level indication fault 5. Pump controller fault 6. Tank 241-C-106 T/C fault	SC: SST ventilation	LCO: SST ventilation sys - active AC: Flammability cntrls AC: Ignition cntrls AC: Flammable gas mon cntrls AC: Trans cntrls (mat balance and supernate removal)	None required	AC: Emergency Preparedness	Controls based on Flammable Gas JCO

Table D-2. Safety SSCs and TSRs for Potentially Severe (E3 and E2) Environmental Consequences. (22 sheets)

ID	Hazardous Conditions	Candidate Causes	Prev SSC	Prev TSR	Mit SSC	Mit TSR	Cont Memo
W320-A-TRANS05	Release of energetic radioactive aerosol to atmosphere due to temperature out of specification resulting in steam bump when Tank 241-C-106 level is lowered which induces a release of a flammable gas plume and then is ignited.	1. Operator mistake 2. Temperature measurement fault	SC: SST ventilation	LCO: SST ventilation sys - active AC: Flammability cntrls AC: Ignition cntrls AC: Flammable gas mon cntrls AC: Trans cntrls (mat balance and supernate removal)	None required	AC: Emergency Preparedness	Controls based on Flammable Gas JCO
W320-A-TRANS06	Release of energetic radioactive aerosol from damaged tank due to waste temperature being out of specification during start of slurry transfer in Tank 241-C-106 and subsequent ignition of organics.	1. Operator mistake 2. Temperature measurement fault	None required	AC: Ign cntrls (organic solvent)	None Required	AC: HEPA Filter cntrl program (source Term)	Controls based on accident analysis (Organic Solvent Fire)
W320-ABCD-ALL01	Release of energetic radioactive aerosol from damaged tank due to flooding on top of Tank 241-C-106 dome	1. Raw water line rupture 2. Heavy rainfall	None required	AC: Dome loading cntrls (excessive loads)	None required	None required	Controls based on accident analysis (Tank Failure Due to Excessive Loads)
W320-ABCD-ALL02	Release of energetic radioactive aerosol from damaged tank due to flooding on top of Tank 241-AY-102 dome	1. Raw water line rupture 2. Heavy rainfall	None required	AC: Dome loading cntrls (excessive loads)	None required	None required	Controls based on accident analysis (Tank Failure Due to Excessive Loads)
W320-ABCD-ALL03	Release of energetic radioactive aerosol from tank dome collapse due to flooding on top of tank dome	1. Raw water line rupture 2. Heavy rainfall	None required	AC: Dome loading cntrls (excessive loads)	None required	None required	Controls based on accident analysis (Tank Failure Due to Excessive Loads)

Table D-2. Safety SSCs and TSRs for Potentially Severe (E3 and E2) Environmental Consequences. (22 sheets)

ID	Hazardous Conditions	Candidate Causes	Prev SSC	Prev TSR	Mit SSC	Mit TSR	Cont Memo
W320-ABCD-ALL04	Release of liquid waste below grade and aerosol release to atmosphere due to water intrusion into Tank 241-C-106 with water level exceeding maximum operating level resulting in leakeage into liner gap, steam formation, breaching of tank bottom and steam bump.	1. Raw water leak 2. Surface water flood 3. Vent system water inleakage 4. Excessive transfer from Tank 241-AY-102 5. Water intrusion in Tank 241-C-105 that cascades over to Tank 241-C-106	SS: Tank level detection syss	LCS/LCO: SST Waste Temp Cntrls AC: Trans Cntrls (topog) AC: Proc Instru and Meas and Test Equip AC: Tank 241-C-106 Waste Temp Cntrls AC: Tank service water intru monitor prog	None required	None required	Controls based on accident analysis (Steam Explosion between Steel Liner and Concrete Shell in Tank 241-C-106) and controls from Surface Leak Resulting In Pool for water intrusion
W320-ABCD-ALL05	Release of liquid waste below grade and aerosol release to atmosphere due to water intrusion into Tank 241-C-106 with water level exceeding maximum operating level resulting in leakage into liner gap, steam formation, breaching of tank bottom and steam bump.	1. Raw water leak 2. Surface water flood 3. Vent system water inleakage 4. Excessive transfer from Tank 241-AY-102 5. Water intrusion in Tank 241-C-105 that cascades over to Tank 241-C-106	SS: Tank level detection syss	LCS/LCO: SST Waste Temp Cntrls AC: Trans Cntrls (topog) AC: Proc Instru and Meas and Test Equip AC: Tank 241-C-106 Waste Temp Cntrls AC: Tank service water intru monitor prog	None required	None required	Controls based on accident analysis (Steam Explosion between Steel Liner and Concrete Shell in Tank 241-C-106) and controls from Surface Leak Resulting In Pool for water intrusion
W320-ABCD-ALL07	Release of radioactive liquid from Tank 241-C-106 onto the ground due to large water intrusion into tank.	1. Raw water leak 2. Surface water flood 3. Vent system water inleakage 4. Excessive transfer from Tank 241-AY-102 5. Water intrusion in Tank 241-C-105 that cascades over to Tank 241-C-106	None required	AC: Tank service water intru monitor prog	SS: Tank level detection syss	AC: Emergency prep (leak)	Controls based on accident analysis (Surface Leak Resulting in Pool)

Table D-2. Safety SSCs and TSRs for Potentially Severe (E3 and E2) Environmental Consequences. (22 sheets)

ID	Hazardous Conditions	Candidate Causes	Prev SSC	Prev TSR	Mit SSC	Mit TSR	Cont Memo
W320-ABCD-ALL08 *	Release of radioactive liquid from Tank 241-C-106 due to siphoning of waste from Tank 241-AY-102 into Tank 241-C-106	1. Plugging of antisiphon holes 2. Loss of electrical power to the pumps 3. Shutdown from operations	SC: Leak detectors in interfacing pits and their alarms	AC: Trans cntrls (commun/config/route ver/caps-blanks) AC: Trans pump admin lock cntrls	SC: Trans sys covers SC: Trans leak detector alarms SS: Tank level detection syss	LCO: Trans leak detect syss AC: Trans cntrls (mat balance) AC: Emergency prep (leak) AC: Trans sys cover removal cntrls	Controls based on accident analysis (Surface Leak Resulting in Pool)
W320-ABCD-CHILL 02	Release of energetic radioactive aerosol from covered pit or deadend pipe due to propylene glycol spray leak into ventilation system of Tank 241-C-106 with ignition propagating into tank dome.	1. Piping or tubing leak	None required	None required	None required	AC: Emergency prep (response procedures))	Controls based on accident analysis (Fire in Contaminated Area)
W320-ABCD-CHILL 03	Release of energetic radioactive aerosol from collapsed Tank 241-C-106 due to excessive cooling from process chiller which restricts inflow and loop seal fails to operate.	1. Chiller control fault 2. High humidity	None required	None required	None required	None required	No controls required based on accident analysis (Tank Failure Due to Vacuum or Degradation)
W320-ABCD-TRANS 01	Release of liquid waste due to sluicer nozzle jet being directed at and breaching Tank 241-C-106 wall resulting in water leaking into liner gap where steam vapor forms and breaches tank bottom.	1. Unavoidable operator action	None required	LCS/LCO: SST Waste Temp Cntrls AC: Trans Cntrls (topog) AC: Proc Instru and Meas and Test Equip AC: Tank 241-C-106 Waste Temp Cntrls	None required	None required	Controls based on accident analysis (Steam Explosion between Steel Liner and Concrete Shell in Tank 241-C-106)
W320-ABCD-TRANS 02	Release of liquid waste below grade and aerosol release to atmosphere due to loss of sluicer arm control in Tank 241-C-106 resulting in jet striking tank liner with liner being breached, water leakage into liner gap, steam formation, breaching of tank bottom and steam bump.	1. Unavoidable operator action	None required	LCS/LCO: SST Waste Temp Cntrls AC: Trans Cntrls (topog) AC: Proc Instru and Meas and Test Equip AC: Tank 241-C-106 Waste Temp Cntrls	None required	None required	Controls based on accident analysis (Steam Explosion between Steel Liner and Concrete Shell in Tank 241-C-106)

Table D-2. Safety SSCs and TSRs for Potentially Severe (E3 and E2) Environmental Consequences. (22 sheets)

ID	Hazardous Conditions	Candidate Causes	Prev SSC	Prev TSR	Mit SSC	Mit TSR	Cont Memo
W320-ABCD-TRANS 03	Release of liquid waste below grade and aerosol release to atmosphere due to siphoning of waste from Tank 241-AY-102 after the stoppage of pumping water exceeds maximum operating level in Tank 241-C-106 resulting in water leakage into liner gap, steam formation, breaching of tank bottom and large steam bump.	1. Buildup of solids in openings 2. Equipment casualty	SS: Tank level detection syss	LCS/LCO: SST Waste Temp Cntrls AC: Trans Cntrls (topog) AC: Proc Instru and Meas and Test Equip AC: Tank 241-C-106 Waste Temp Cntrls	None required	None required	Controls based on accident analysis (Steam Explosion between Steel Liner and Concrete Shell in Tank 241-C-106) and controls from Surface Leak Resulting in Pool for level monitoring
W320-ABCD-TRANS 05	Release of liquid waste below grade and aerosol release to atmosphere due to sluicer hose break in Tank 241-C-106 resulting in jet striking tank liner with liner being breached, water leakage into liner gap, steam formation, and breaching of tank bottom.	1. Primary failure of Hose 2. Severe Water hammer 3. Fatigue from vibration	None required	LCS/LCO: SST Waste Temp Cntrls AC: Trans Cntrls (topog) AC: Proc Instru and Meas and Test Equip AC: Tank 241-C-106 Waste Temp Cntrls	None required	None required	Controls based on accident analysis (Steam Explosion between Steel Liner and Concrete Shell in Tank 241-C-106)
W320-ABCD-TRANS 06	Release of liquid waste below grade and aerosol release to atmosphere due to sluicing arm breaking off and penetrating Tank 241-C-106 liner resulting in water leakage into liner gap, steam formation, liner breach and steam bump.	1. Primary failure of sluicer 2. Severe Water hammer 3. Severe thermal shock 4. Corrosion 5. Metal fatigue from vibration	None required	LCS/LCO: SST Waste Temp Cntrls AC: Trans Cntrls (topog) AC: Proc Instru and Meas and Test Equip AC: Tank 241-C-106 Waste Temp Cntrls	None required	None required	Controls based on accident analysis (Steam Explosion between Steel Liner and Concrete Shell in Tank 241-C-106)
W320-ABCD-TRANS 07	Release of liquid waste below grade and aerosol release to atmosphere due to sluicer flow being excessive in Tank 241-C-106 resulting in jet striking tank liner with liner being breached, water leakage under tank bottom, steam formation, breaching of tank bottom and large steam bump.	1. Sluice flow control fault 2. Operator error	None required	LCS/LCO: SST Waste Temp Cntrls AC: Trans Cntrls (topog) AC: Proc Instru and Meas and Test Equip AC: Tank 241-C-106 Waste Temp Cntrls	None required	None required	Controls based on accident analysis (Steam Explosion between Steel Liner and Concrete Shell in Tank 241-C-106)

Table D-2. Safety SSCs and TSRs for Potentially Severe (E3 and E2) Environmental Consequences. (22 sheets)

ID	Hazardous Conditions	Candidate Causes	Prev SSC	Prev TSR	Mit SSC	Mit TSR	Cont Memo
W320-ABCD-TRANS 08	Release of liquid waste below grade and aerosol release to atmosphere due to sluicer flow excessive into Tank 241-C-106 with water level exceeding maximum operating level resulting in leakage into liner gap, steam formation, breaching of tank bottom and large steam bump.	1. Sluice flow control fault 2. Operator error	None required	LCS/LCO: SST Waste Temp Cntrls AC: Trans Cntrls (topog) AC: Proc Instru and Meas and Test Equip AC: Tank 241-C-106 Waste Temp Cntrls	None required	None required	Controls based on accident analysis (Steam Explosion between Steel Liner and Concrete Shell in Tank 241-C-106)
W320-ABCD-TRANS 09	Release of liquid waste below grade and aerosol release to atmosphere due to excessive waste temperature change rate Tank 241-C-106 liner breaches, resulting in water leakage under tank bottom, steam formation, breaching of tank bottom and large steam bump.	1. High temperature in Tank 241-AY-102	None required	LCS/LCO: SST Waste Temp Cntrls AC: Trans Cntrls (topog) AC: Proc Instru and Meas and Test Equip AC: Tank 241-C-106 Waste Temp Cntrls	None required	None required	Controls based on accident analysis (Steam Explosion between Steel Liner and Concrete Shell in Tank 241-C-106)
W320-ABCD-TRANS 11	Release of energetic radioactive aerosol from transfer line in pit due to flammable gas collecting in pit and being ignited. Cover block lifted and falls onto piping in pit resulting in spray release.	1. Chimney through deep drop legs 2. 6 in. high capacity drain to dome space 3. Pit sealed to minimize inleakage	None required	AC: Ignition cntrls (vehicle)	None required	AC: Emergency prep (response procedures)	Controls based on accident analysis (Fire in Contaminated Area)
W320-ABCD-TRANS 11*	Release of energetic radioactive aerosol from transfer line in pit due to flammable gas collecting in pit and being ignited. Cover block lifted and falls onto piping in pit resulting in spray release.	1. Chimney through deep drop legs 2. 6 in. high capacity drain to dome space 3. Pit sealed to minimize inleakage	SC: SST ventilation SC: DST ventilation	LCO: DST and AWF ventilation sys LCO: SST ventilation sys - active AC: Flammability cntrls AC: Ignition cntrls AC: Flammable gas mon cntrls AC: Trans cntrls (mat balance and supernate removal)	None required	AC: Emergency Preparedness	Controls based on analysis for Flammable Gas Deflagration

Table D-2. Safety SSCs and TSRs for Potentially Severe (E3 and E2) Environmental Consequences. (22 sheets)

ID	Hazardous Conditions	Candidate Causes	Prev SSC	Prev TSR	Mit SSC	Mit TSR	Cont Memo
W320-ABCD-TRANS 12	Release of energetic radioactive aerosol from line break due to pipe or jumper breach in distributor pit of Tank 241-AY-102 with cover block off during slurry transfer.	1. Pipe failure 2. Improper Assembly 3. Other operators change jumper hookup 4. Connector faults	None required	LCO: Trans cntrls (config man/route ver)	SC: Trans sys covers	LCO: Trans sys covers AC: Trans sys cover removal cntrls	Controls based on accident analysis (Spray Leak in Structure or from Overground Waste Transfer Lines)
W320-ABCDF-ALL01*	Release of energetic radioactive aerosol to atmosphere due to buildup of flammable gas in Tank 241-AY-102 pit drain pipe which is then ignited.	1. Flammable gas generation from tank waste	SC: DST ventilation	LCO: DST and AWF ventilation sys AC: Flammability cntrls AC: Ignition cntrls AC: Flammable gas mon cntrls AC: Trans cntrls (mat balance and supernate removal)	None required	AC: Emergency Preparedness	Controls based on Flammable Gas JCO
W320-ALL-VENT01	Release of energetic radioactive aerosol from breached ventilation duct for Tank 241-AY-102 due to a buildup of ammonium nitrate in ventilation ducting and ignition via hot work, range fire etc.	1. Natural occurrence under proper conditions	None required	AC: Ign cntrls	None required	AC: HEPA Filter cntrl program (source Term)	Controls based on accident analysis (In-Tank Fuel Fire/Deflagration)
W320-B-ALL01	Release of a large amount of high energy aerosolized waste from Tank 241-C-106 dome collapse due to volcanic ashfall.	1. Natural phenomena	None required	AC: Dome loading cntrls (excessive loads)	None required	None required	Controls based on accident analysis (Tank Failure Due to Excessive Loads)
W320-B-ALL02	Release of a large amount of high energy aerosolized waste from Tank 241-AY-102 dome collapse due to volcanic ashfall.	1. Natural phenomena	None required	AC: Dome loading cntrls (excessive loads)	None required	None required	Controls based on accident analysis (Tank Failure Due to Excessive Loads)
W320-B-ALL03	Release of high energy aerosolized waste to the atmosphere from Tank 241-C-106 dome collapse due to extreme snow fall.	1. Natural phenomena	None required	AC: Dome loading cntrls (excessive loads)	None required	None required	Controls based on accident analysis (Tank Failure Due to Excessive Loads)

Table D-2. Safety SSCs and TSRs for Potentially Severe (E3 and E2) Environmental Consequences. (22 sheets)

ID	Hazardous Conditions	Candidate Causes	Prev SSC	Prev TSR	Mit SSC	Mit TSR	Cont Memo
W320-B-ALL04	Release of large amount of high energy aerosolized waste from Tank 241-AY-102 dome collapse due to extreme snow fall.	1. Natural phenomena	None required	AC: Dome loading cntrls (excessive loads)	None required	None required	Controls based on accident analysis (Tank Failure Due to Excessive Loads)
W320-B-ALL05	Release of energetic radioactive aerosol from Tank 241-C-106 dome collapse due to dome being overloaded.	1. Maintenance error 2. Procedure violation	None required	AC: Dome loading cntrls (excessive loads)	None required	None required	Controls based on accident analysis (Tank Failure Due to Excessive Loads)
W320-B-ALL06	Release of energetic radioactive aerosol from Tank 241-AY-102 dome collapse due to dome being overloaded.	1. Maintenance error 2. Procedure violation	None required	AC: Dome loading cntrls (excessive loads)	None required	None required	Controls based on accident analysis (Tank Failure Due to Excessive Loads)
W320-B-ALL08	Large high energy radioactive aerosolized waste release from Tank 241-AY-102 due to a large water intrusion which induces a flammable gas release event. It is then ignited resulting in a dome space fire.	1. Raw water leak 2. Surface water flood	SC: DST ventilation	LCO: DST and AWF ventilation sys AC: Flammability cntrls AC: Ignition cntrls AC: Flammable gas mon cntrls AC: Trans cntrls (mat balance and supernate removal)	None required	AC: Emergency Preparedness	Controls based on Flammable Gas JCO
W320-B-ALL09	Release of energetic radioactive aerosol from damaged tank due to formation of organic layer in Tank 241-AY-102 during slurry distribution and subsequent ignition of organics.	1. Sluicing causes organic separation	None required	AC: Ign cntrls (organic solvent) AC: Trans cntrls (organic solvent)	None Required	AC: HEPA Filter cntrl program (source Term)	Controls based on accident analysis (Organic Solvent Fire)
W320-B-ALL10	Release of energetic radioactive aerosol from damaged tank due to formation of organic layer in Tank 241-C-106 during sluicing and subsequent ignition of organics.	1. Sluicing causes organic separation	None required	AC: Ign cntrls (organic solvent) AC: Trans cntrls (organic solvent)	None Required	AC: HEPA Filter cntrl program (source Term)	Controls based on accident analysis (Organic Solvent Fire)

Table D-2. Safety SSCs and TSRs for Potentially Severe (E3 and E2) Environmental Consequences. (22 sheets)

ID	Hazardous Conditions	Candidate Causes	Prev SSC	Prev TSR	Mit SSC	Mit TSR	Cont Memo
W320-B-FLUSH01	Release of energetic radioactive aerosol from damaged Tank 241-C-106 single shell tank due to ignition of flammable gas plume and resulting filter breach induced by large water intrusion into tank.	1. Maintenance error 2. Communications error between different groups using the pit	None required	AC: Trans cntrls (material balance)	SS: CAM interlk on 296-P-16 ventilation sys SS: CAM interlk on 296-C-006 ventilation sys	LCO: Ventilation stack CAM interlk syss AC: HEPA Filter cntrls (source term)	Controls based on accident analysis (HEPA Filter Failure - Exposure to High Temperature or Pressure)
W320-B-FLUSH04	Release of low energy radioactive aerosol from breached Tank 241-C-106 due to flushing water spray through sluice nozzle resulting in excessive tank vacuum.	1. Planned	None required	None required	None required	None required	No controls required based on accident analysis (Tank Failure Due to Vacuum or Degradation)
W320-B-TRANS14	Large high energy radioactive aerosolized waste release from Tank 241-AY-102 to the atmosphere due to low slurry flow to distributor which results in solids piling up. Pile generates significant amount of flammable gas and LFL is reached in dome space. It is then ignited resulting in a dome space fire.	1. 3-way ball valve in flushing system not fully open 2. Pump controller fault	SC: DST ventilation	LCO: DST and AWF ventilation sys AC: Flammability cntrls AC: Ignition cntrls AC: Flammable gas mon cntrls AC: Trans cntrls (mat balance and supernate removal)	None required	AC: Emergency Preparedness	Controls based on Flammable Gas JCO
W320-B-TRANS15	Large high energy aerosolized waste release from Tank 241-AY-102 to the atmosphere due to air injected into the waste from the startup of slurry flow from the distributor. Gas is scrubbed from the waste and LFL is reached in dome space. It is then ignited resulting in a dome space fire.	1. Normal procedure	SC: DST ventilation	LCO: DST and AWF ventilation sys AC: Flammability cntrls AC: Ignition cntrls AC: Flammable gas mon cntrls AC: Trans cntrls (mat balance and supernate removal)	None required	AC: Emergency Preparedness	Controls based on Flammable Gas JCO

Table D-2. Safety SSCs and TSRs for Potentially Severe (E3 and E2) Environmental Consequences. (22 sheets)

ID	Hazardous Conditions	Candidate Causes	Prev SSC	Prev TSR	Mit SSC	Mit TSR	Cont Memo
W320-B-TRANS16	Large high energy radioactive aerosolized waste release from Tank 241-AY-102 to the atmosphere due to distributor nozzle breaking off which results in solids piling up. Pile generates significant amount of flammable gas and LFL is reached in dome space. It is then ignited resulting in a dome space fire.	1. Primary failure of distributor 2. Severe water hammer 3. Severe thermal shock 4. Corrosion 5. Metal fatigue from vibration	SC: DST ventilation	LCO: DST and AWF ventilation sys AC: Flammability cntrls AC: Ignition cntrls AC: Flammable gas mon cntrls AC: Trans cntrls (mat balance and supernate removal)	None required	AC: Emergency Preparedness	Controls based on Flammable Gas JCO
W320-B-TRANS17	Release of high energy aerosolized waste from damaged Tank 241-C-106 due to the sluicer hose breaking which then impinges into the solids releasing a region of retained flammable gas. The gas is then ignited and a plume fire results.	1. Primary failure of Hose 2. Severe Water hammer 3. Severe thermal shock 4. Corrosion 5. Fatigue from vibration	SC: SST ventilation	LCO: SST ventilation sys - active AC: Flammability cntrls AC: Ignition cntrls AC: Flammable gas mon cntrls AC: Trans cntrls (mat balance and supernate removal)	None required	AC: Emergency Preparedness	Controls based on Flammable Gas JCO
W320-B-TRANS18	Release of large high energy aerosolized waste to the atmosphere due to sluice water transfer rate being excessive resulting in the Tank 241-C-106 waste level being lowered quickly with the waste temperature too high. This results in a large steam bump and flammable gas release with a plume burn.	1. Flowmeters fault or out of calibration 2. Operator error in positioning Tank 241-C-106 pump 3. Inadvertant or accidental actuation of Tank 241-C-106 pump but not Tank 241-AY-102 pump 4. ENRAF level indication fault 5. Pump controller fault 6. Tank 241-C-106 T/C fault	SC: SST ventilation	LCO: SST ventilation sys - active AC: Flammability cntrls AC: Ignition cntrls AC: Flammable gas mon cntrls AC: Trans cntrls (mat balance and supernate removal)	None required	AC: Emergency Preparedness	Controls based on Flammable Gas JCO

Table D-2. Safety SSCs and TSRs for Potentially Severe (E3 and E2) Environmental Consequences. (22 sheets)

ID	Hazardous Conditions	Candidate Causes	Prev SSC	Prev TSR	Mit SSC	Mit TSR	Cont Memo
W320-B-TRANS23	Release of energetic radioactive aerosol from line break due to pipe or jumper breach in pump pit of Tank 241-AY-102 with cover block off during sluicing.	1. Pipe failure 2. Improper Assembly 3. Other operators change jumper hookup 4. Connector faults	None required	LCO: Trans cntrls (config man/route ver) AC: Trans pump admin lock cntrls	SC: Trans sys covers	LCO: Trans sys covers AC: Trans sys cover removal cntrls	Controls based on accident analysis (Spray Leak in Structure or from Overground Waste Transfer Lines)
W320-B-TRANS24	Release of energetic radioactive aerosol from line break due to pipe or jumper breach in pump pit of Tank 241-C-106 with cover block off.	1. Pipe failure 2. Improper Assembly 3. Other operators change jumper hookup 4. Connector faults	None required	LCO: Trans cntrls (config man/route ver) AC: Trans pump admin lock cntrls	SC: Trans sys covers	LCO: Trans sys covers AC: Trans sys cover removal cntrls	Controls based on accident analysis (Spray Leak in Structure or from Overground Waste Transfer Lines)
W320-B-TRANS25	Release of energetic radioactive aerosol from line break due to pipe or jumper breach in sluice pit of Tank 241-C-106 with cover block off.	1. Pipe failure 2. Improper Assembly 3. Other operators change jumper hookup 4. Connector faults	None required	LCO: Trans cntrls (config man/route ver) AC: Trans pump admin lock cntrls	SC: Trans sys covers	LCO: Trans sys covers AC: Trans sys cover removal cntrls	Controls based on accident analysis (Spray Leak in Structure or from Overground Waste Transfer Lines)
W320-B-TRANS26	Release of energetic radioactive aerosol from transfer line in Tank 241-C-106 pit due to flammable gas collecting in pit and being ignited. Cover block lifted and falls onto piping in pit resulting in spray release.	1. Chimney through deep drop legs 2. 6 in. high capacity drain to dome space 3. Pit sealed to minimize inleakage	SC: SST ventilation	LCO: SST ventilation sys - active AC: Flammability cntrls AC: Ignition cntrls AC: Flammable gas mon cntrls AC: Trans cntrls (mat balance and supernate removal)	None required	AC: Emergency Preparedness	Controls based on analysis for Flammable Gas Deflagration
W320-B-TRANS27	Release of energetic radioactive aerosol from transfer line in pit due to flammable gas collecting in pit and being ignited. Cover block lifted and falls onto piping in pit resulting in spray release.	1. Chimney through deep drop legs 2. 6 in. high capacity drain to dome space 3. Pit sealed to minimize inleakage	SC: SST ventilation SC: DST ventilation	LCO: DST and AWF ventilation sys LCO: SST ventilation sys - active and passive AC: Flammability cntrls AC: Ignition cntrls AC: Flammable gas mon cntrls AC: Trans cntrls (mat balance and supernate removal)	None required	AC: Emergency Preparedness	Controls based on analysis for Flammable Gas Deflagration

Table D-2. Safety SSCs and TSRs for Potentially Severe (E3 and E2) Environmental Consequences. (22 sheets)

ID	Hazardous Conditions	Candidate Causes	Prev SSC	Prev TSR	Mit SSC	Mit TSR	Cont Memo
W320-B-TRANS32	Release of large high energy aerosolized radioactive waste from a spray leak from transfer line break due to aircraft strike on underground transfer line berm.	1. Light aircraft crash	None required	None required	None required	None required	No controls required based on TWRS BIO assigned frequency of FO for aircraft crash.
W320-B-VENT08	Release of energetic radioactive aerosol from damaged tank due to loss of Tank 241-C-106 ventilation for many months, dry out of waste and subsequent ignition of organics.	1. Loss of power 2. Equipment casualty	None required	AC: Ign cntrls (organic solvent)	None Required	AC: HEPA Filter cntrl program (source Term)	Controls based on accident analysis (Organic Solvent Fire)
W320-B-VENT09*	Release of energetic radioactive aerosol from damaged tank due to loss of Tank 241-AY-102 ventilation for many months, dry out of waste and subsequent ignition of organics.	1. Loss of power 2. Equipment casualty	None required	AC: Ign cntrls (organic solvent) AC: Trans cntrls (organic solvent)	None Required	AC: HEPA Filter cntrl program (source Term)	Controls based on accident analysis (Organic Solvent Fire)
W320-BCD-ALL02	Release of energetic radioactive aerosol from collapsed Tank 241-AY-102 due to excessive vacuum resulting from W030 ventilation system inlet damper closing and failure of PCV fails to relieve vacuum.	1. Rotameter valve to controller fault 2. Operator error in adjusting rotameter or inadvertant adjustment	None required	None required	None required	None required	No controls required based on accident analysis (Tank Failure Due to Vacuum or Degradation)
W320-BCD-ALL03	Release of energetic radioactive aerosol from damaged Tank 241-C-106 due to excessive vacuum resulting from ventilation system fan overspeed and failure of tank loop seal failure.	1. Rotameter valve to controller fault 2. Operator error in adjusting rotameter or inadvertant adjustment	None required	None required	None required	None required	No controls required based on accident analysis (Tank Failure Due to Vacuum or Degradation)

Table D-2. Safety SSCs and TSRs for Potentially Severe (E3 and E2) Environmental Consequences. (22 sheets)

ID	Hazardous Conditions	Candidate Causes	Prev SSC	Prev TSR	Mit SSC	Mit TSR	Cont Memo
W320-BCD-ALL07	Release of liquid waste below grade and aerosol release to atmosphere due to water intrusion into Tank 241-C-105 which travels through cascade line into Tank 241-C-106 with water level exceeding maximum operating level resulting in leakage into liner gap, steam formation, bulging of tank bottom, ripping of liner and steam bump.	1. Raw water leak 2. Surface water flood	SS: Tank level detection syss	LCS/LCO: SST Waste Temp Cntrls AC: Trans Cntrls (topog) AC: Proc Instru and Meas and Test Equip AC: Tank 241-C-106 Waste Temp Cntrls	None required	None required	Controls based on accident analysis (Steam Explosion between Steel Liner and Concrete Shell in Tank 241-C-106) and controls from Surface Leak Resulting in Pool for level monitoring
W320-BCD-ALL08	Release of liquid waste below grade and aerosol release to atmosphere due to excessive corrosion because of waste disturbance in Tank 241-C-106 resulting in leakage into liner gap, steam formation, breaching of tank bottom and steam bump.	1. Inadequate prediction of waste behavior	None required	LCS/LCO: SST Waste Temp Cntrls AC: Trans Cntrls (topog) AC: Proc Instru and Meas and Test Equip AC: Tank 241-C-106 Waste Temp Cntrls	None required	None required	Controls based on accident analysis (Steam Explosion between Steel Liner and Concrete Shell in Tank 241-C-106)
W320-BCD-FLUSHO 1	Release of energetic radioactive aerosol from transfer line due to 3 way valve left in flush position after flushing. Cover plug is lifted out of cover block on initiation of sluicing process.	1. Maintenance error 2. Communications error between different groups using the pit	SS: Backflow preventers	LCO: Trans cntrls (config man/route ver) AC: Trans pump admin lock cntrls	SC: Stack CAM and interlk SC: Trans sys covers	LCO: Trans sys covers AC: Trans sys cover removal cntrls	Controls based on accident analysis (Spray Leak in Structure or from Overground Waste Transfer Lines)
W320-BCD-FLUSHO 2*	Release of energetic radioactive aerosol from flush tank of transfer truck due to start of submersible pump in Tank 241-C-106 during the flush of slurry transfer line. Flush tank is filled and pressurized resulting in rupture of tank or transfer line.	1. Human error 2. Communications error between different groups	SS: Backflow preventers	LCO: Trans cntrls (config man/route ver) AC: Trans pump admin lock cntrls	None required	None required	Controls based on accident analysis (Spray Leak in Structure or from Overground Waste Transfer Lines)

Table D-2. Safety SSCs and TSRs for Potentially Severe (E3 and E2) Environmental Consequences. (22 sheets)

ID	Hazardous Conditions	Candidate Causes	Prev SSC	Prev TSR	Mit SSC	Mit TSR	Cont Memo
W320-BCD-PUMP03	Release of small high energy aerosol to atmosphere due to immersible pump being raised too high in Tank 241-AY-102, winch lifting strap breaking, pump falling into waste results in a flammable gas release which is ignited by broken electrical cables, plume burn.	1. Operator error in positioning direction 2. Inadvertant or accidental actuation 3. Winch controller fault	SC: DST ventilation	LCO: DST and AWF ventilation sys AC: Flammability cntrls AC: Ignition cntrls AC: Flammable gas mon cntrls AC: Trans cntrls (mat balance and supernate removal)	None required	AC: Emergency Preparedness	Controls based on Flammable Gas JCO
W320-BCD-PUMP04	Release of energetic radioactive aerosol to atmosphere due to submersible pump being raised too high in Tank 241-AY-102, winch lifting strap breaking, pump falling into waste resulting in a flammable gas release which is ignited by broken electrical cables.	1. Operator error in positioning direction 2. Inadvertant or accidental actuation 3. Winch controller fault	SC: DST ventilation	LCO: DST and AWF ventilation sys AC: Flammability cntrls AC: Ignition cntrls AC: Flammable gas mon cntrls AC: Trans cntrls (mat balance and supernate removal)	None required	AC: Emergency Preparedness	Controls based on Flammable Gas JCO
W320-BCD-PUMP05	Release of small high energy aerosol to atmosphere due to immersible pump being raised too high in Tank 241-C-106, motor breaks gear assembly, pump freespools into waste resulting in a flammable gas release which is ignited by broken electrical cables, plume burn.	1. Operator error in positioning direction 2. Inadvertant or accidental actuation 3. Winch controller fault	SC: SST ventilation	LCO: SST ventilation sys - active AC: Flammability cntrls AC: Ignition cntrls AC: Flammable gas mon cntrls AC: Trans cntrls (mat balance and supernate removal)	None required	AC: Emergency Preparedness	Controls based on Flammable Gas JCO

Table D-2. Safety SSCs and TSRs for Potentially Severe (E3 and E2) Environmental Consequences. (22 sheets)

ID	Hazardous Conditions	Candidate Causes	Prev SSC	Prev TSR	Mit SSC	Mit TSR	Cont Memo
W320-BCD-PUMP08	Release of liquid waste below grade and aerosol release to atmosphere due to submersible pump being raised too high, winch lifting strap breaking, pump falling and penetrating Tank 241-C-106 liner resulting in water leakage into liner gap, steam formation, liner bulges/rips and steam bump occurs.	1. Operator error in positioning direction 2. Inadvertant or accidental actuation 3. Winch controller fault	None required	LCS/LCO: SST Waste Temp Cntrls AC: Trans Cntrls (topog) AC: Proc Instru and Meas and Test Equip AC: Tank 241-C-106 Waste Temp Cntrls	None required	None required	Controls based on accident analysis (Steam Explosion between Steel Liner and Concrete Shell in Tank 241-C-106)
W320-BCD-PUMP09	Release of large high energy aerosolized waste to atmosphere due to immersible pump being raised too high in Tank 241-C-106, winch lifting strap breaking, pump falling into waste results in a flammable gas release which is ignited by broken electrical cables, plume burn.	1. Operator error in positioning direction 2. Inadvertant or accidental actuation 3. Winch controller fault	SC: SST ventilation	LCO: SST ventilation sys - active AC: Flammability cntrls AC: Ignition cntrls AC: Flammable gas mon cntrls AC: Trans cntrls (mat balance and supernate removal)	None required	AC: Emergency Preparedness	Controls based on Flammable Gas JCO
W320-BCD-TRANS09	Release of liquid waste below grade and aerosol release to atmosphere due to loss of pumping from Tank 241-C-106 and continued pumping of Tank 241-AY-102 water exceeds maximum operating level resulting in water leakage into liner gap, steam formation, breaching of tank bottom and large steam bump.	1. Loss of power 2. Equipment casualty	SS: Tank level detection syss	LCS/LCO: SST Waste Temp Cntrls AC: Trans Cntrls (topog) AC: Proc Instru and Meas and Test Equip AC: Tank 241-C-106 Waste Temp Cntrls	None required	None required	Controls based on accident analysis (Steam Explosion between Steel Liner and Concrete Shell in Tank 241-C-106) and controls from Surface Leak Resulting in Pool for level monitoring
W320-BCD-TRANS11	Release of energetic radioactive aerosol from transfer line due to blank flange left off flushing connection in Tank 241-C-106 pit after flushing. Cover plug is lifted out of cover block on initiation of sluicing process.	1. Maintenance error 2. Communications error between different groups using the pit	None required	LCO: Trans cntrls (config man/route ver) AC: Trans pump admin lock cntrls	SC: Trans sys covers	LCO: Trans sys covers AC: Trans sys cover removal cntrls	Controls based on accident analysis (Spray Leak in Structure or from Overground Waste Transfer Lines)

Table D-2. Safety SSCs and TSRs for Potentially Severe (E3 and E2) Environmental Consequences. (22 sheets)

ID	Hazardous Conditions	Candidate Causes	Prev SSC	Prev TSR	Mit SSC	Mit TSR	Cont Memo
W320-BCD-TRANS1 2	Release of energetic radioactive aerosol from transfer line due to blank flange left off flushing connection in Tank 241-AY-102 pit after flushing. Cover plug is lifted out of cover block on initiation of sluicing process.	1. Maintenance error 2. Communications error between different groups using the pit	SC: Pipe-in-pip e encasements	LCO: Trans cntrls (config man/route ver) AC: Trans pump admin lock cntrls	SC: Trans sys covers	LCO: Trans sys covers AC: Trans sys cover removal cntrls	Controls based on accident analysis (Spray Leak in Structure or from Overground Waste Transfer Lines)
W320-D-ALL06	Release of a small amount of low energy aerosolized waste through failed filters due to seismic event which induces a steam bump in Tank 241-AY-102, and failure of filters or ducting.	1. Natural Phenomena	None required	None required	None required	AC: Emergency prep (seismic)	Controls based on accident analysis (Natural Phenomena - Seismic)
W320-D-ALL07	Release of energetic radioactive aerosol from damaged double shell Tank 241-AY-102 due to seismic event which releases flammable gas from the waste and after shocks cause mechanical sparks which ignites the flammable gas mixture.	1. Natural Phenomena	SC: DST ventilation	LCO: DST and AWF ventilation sys AC: Flammability cntrls AC: Ignition cntrls AC: Flammable gas mon cntrls AC: Trans cntrls (mat balance and supernate removal)	None required	AC: Emergency Preparedness	Controls based on Flammable Gas JCO and LA-UR-92-3196, with additional controls on primary tank leak Detect Syss
W320-D-ALL08	Release of energetic radioactive aerosol to atmosphere due to start of air lift circulators in Tank 241-AY-102 resulting in a release of flammable gas plume which is then ignited.	1. Human error 2. Communications error with other workers using the tank 3. IOSRs require activation of ALCs in event temperature above limit	SC: DST ventilation	LCO: DST and AWF ventilation sys AC: Flammability cntrls AC: Ignition cntrls AC: Flammable gas mon cntrls AC: Trans cntrls (mat balance and supernate removal)	None required	AC: Emergency Preparedness	Controls based on Flammable Gas JCO

Table D-2. Safety SSCs and TSRs for Potentially Severe (E3 and E2) Environmental Consequences. (22 sheets)

ID	Hazardous Conditions	Candidate Causes	Prev SSC	Prev TSR	Mit SSC	Mit TSR	Cont Memo
W320-D-ALL09	Release of liquid waste below grade and aerosol release to atmosphere due to seismic event Tank 241-C-106 liner is breached resulting in water leakage into liner gap, steam formation, breaching of tank bottom and large steam bump.	1. Natural Phenomena	None required	LCS/LCO: SST Waste Temp Cntrls AC: Trans Cntrls (topog) AC: Proc Instru and Meas and Test Equip AC: Tank 241-C-106 Waste Temp Cntrls	None required	AC: Emergency prep (seismic)	Controls based on accident analysis (Steam Explosion between Steel Liner and Concrete Shell in Tank 241-C-106)
W320-D-CHILL01	Release of energetic radioactive aerosol from damaged tank due to a leak and ignition of propylene glycol from pit chiller into Tank 241-C-106.	1. Piping or tubing leak	None required	AC: Ign cntrls	None required	AC: HEPA Filter cntrl program (source Term)	Controls based on accident analysis (In-Tank Fuel Fire/Deflagration)
W320-D-CHILL02	Release of energetic radioactive aerosol from damaged tank due to a leak and ignition of propylene glycol from ventilation chiller into Tank 241-C-106.	1. Piping or tubing leak	None required	AC: Ign cntrls	None required	AC: HEPA Filter cntrl program (source Term)	Controls based on accident analysis (In-Tank Fuel Fire/Deflagration)
W320-D-PUMP01	Release of energetic radioactive aerosol from line break in Tank 241-AY-102 transfer pit due to immersible pump being positioned too high resulting in air entrainment in transfer line. Booster pump torques in reaction to air in transfer line and jumper connectors break. Cover block is off.	1. Operator error in positioning 2. Inadvertant or accidental repositioning 3. Level indication fault 4. Waste level indicator on pump fault	None required	LCO: Trans cntrls (config man/route ver) AC: Trans pump admin lock cntrls	SC: Trans sys covers	LCO: Trans sys covers AC: Trans sys cover removal cntrls	Controls based on accident analysis (Spray Leak in Structure or from Overground Waste Transfer Lines)

Table D-2. Safety SSCs and TSRs for Potentially Severe (E3 and E2) Environmental Consequences. (22 sheets)

ID	Hazardous Conditions	Candidate Causes	Prev SSC	Prev TSR	Mit SSC	Mit TSR	Cont Memo
W320-D-PUMP03	Release of energetic radioactive aerosol from line break in Tank 241-C-106 transfer pit due to immersible pump being positioned too high resulting in air entrainment in transfer line. Booster pump torques in reaction to air in transfer line and jumper connectors break. Cover block is off.	1. Operator error in positioning 2. Inadvertant or accidental repositioning 3. Level indication fault 4. Waste level indicator on pump fault	None required	LCO: Trans cntrls (config man/route ver) AC: Trans pump admin lock cntrls	SC: Trans sys covers	LCO: Trans sys covers AC: Trans sys cover removal cntrls	Controls based on accident analysis (Spray Leak in Structure or from Overground Waste Transfer Lines)
W320-D-PUMP04	Release of energetic radioactive aerosol from damaged Tank 241-AY-102 due to pumping of more solids than anticipated. Annulus cooling mod not completed resulting in overheating of waste and a tank bump. Bump induces large flammable gas release. It is then ignited resulting in a dome space fire.	1. Mass flowmeter fault or out of calibration 2. Operator error in positioning slurry pump 3. Inadvertant or accidental repositioning 4. Level indication fault 5. Waste level indicator on pump Tank 241-C-106 fault 6. Pump controller fault	SC: DST ventilation SC: Annulus ventilation syss	LCO: DST and AWF ventilation sys LCO: SST ventilation sys - active and passive LCO: Primary tank leak detection sys AC: Flammability cntrls AC: Ignition cntrls AC: Flammable gas mon cntrls AC: Trans cntrls (mat balance and supernate removal)	None required	AC: Emergency Preparedness	Controls based on Flammable Gas JCO
W320-D-TRANS05	Release of energetic radioactive aerosol to atmosphere due to head space gas concentration above LFL in Tank 241-AY-102 with the start of pumping which ignites the flammable gas.	1. Spontaneous GRE 2. Induced GRE	SC: DST ventilation	LCO: DST and AWF ventilation sys AC: Flammability cntrls AC: Ignition cntrls AC: Flammable gas mon cntrls AC: Trans cntrls (mat balance and supernate removal)	None required	AC: Emergency Preparedness	Controls based on Flammable Gas JCO

Table D-2. Safety SSCs and TSRs for Potentially Severe (E3 and E2) Environmental Consequences. (22 sheets)

ID	Hazardous Conditions	Candidate Causes	Prev SSC	Prev TSR	Mit SSC	Mit TSR	Cont Memo
W320-D-TRANS06	Release of large high energy aerosolized waste to the atmosphere due to slurry transfer rate being excessive resulting in a rapid reduction in the hydrostatic pressure in Tank 241-C-106. This results in a flammable gas release. Gas is ignited and a dome space fire results.	1. Sluice flow control fault	SC: SST ventilation	LCO: SST ventilation sys - active AC: Flammability cntrls AC: Ignition cntrls AC: Flammable gas mon cntrls AC: Trans cntrls (mat balance and supernate removal)	None required	AC: Emergency Preparedness	Controls based on Flammable Gas JCO
W320-D-TRANS07	Release of high energetic aerosolized waste to the atmosphere due to sluice water transfer rate being excessive resulting in the Tank 241-AY-102 waste level being lowered quickly with the waste temperature too high. This results in a large steam bump and flammable gas release with ignition.	1. Operator mistake 2. Level indication fault 3. Pump controller fault	SC: DST ventilation	LCO: DST and AWF ventilation sys AC: Flammability cntrls AC: Ignition cntrls AC: Flammable gas mon cntrls AC: Trans cntrls (mat balance and supernate removal)	None required	AC: Emergency Preparedness	Controls based on Flammable Gas JCO
W320-D-TRANS09	Release of liquid waste below grade and aerosol release to atmosphere due to movement of debris during sluicing which impacts and breaches the Tank 241-C-106 liner, resulting in water leakage into liner gap, steam formation, breaching of tank bottom and steam bump.	1. Expected outcome of high pressure sluice. Many objects are in the waste.	None required	LCS/LCO: SST Waste Temp Cntrls AC: Trans Cntrls (topog) AC: Proc Instru and Meas and Test Equip AC: Tank 241-C-106 Waste Temp Cntrls	None required	None required	Controls based on accident analysis (Steam Explosion between Steel Liner and Concrete Shell in Tank 241-C-106)
W320-D-TRANS10	Release of energetic radioactive aerosol from jumper in pit due to seismic event. Cover block breached by ground motion resulting in spray release.	1. Natural Phenomena	None required	None required	SC: Trans sys covers	LCO: Trans sys covers AC: Trans sys cover removal cntrls AC: Emergency prep (seismic)	Controls based on accident analysis (Spray Leak in Structure or from Overground Waste Transfer Lines)

Table D-2. Safety SSCs and TSRs for Potentially Severe (E3 and E2) Environmental Consequences. (22 sheets)

ID	Hazardous Conditions	Candidate Causes	Prev SSC	Prev TSR	Mit SSC	Mit TSR	Cont Memo
W320-D-TRANS11	Release of large high energy aerosolized radioactive waste to the atmosphere from a spray leak from transfer line due to seismic event.	1. Natural Phenomena	None required	None	None required	AC: Emergency prep (seismic)	Controls based on accident analysis (Spray Leak from Underground Waste Transfer Lines)
W320-D-VENT12	Release of energetic radioactive aerosol from collapsed Tank 241-C-106 due to incorrect alignment of current ventilation system through sluice nozzle resulting in excessive tank vacuum with loop seal failure.	1. Operator error 2. Communications error	None required	None required	None required	None required	No controls required based on accident analysis (Tank Failure Due to Vacuum or Degradation)
W320-D-VENT13	Large high energy radioactive aerosolized waste release from Tank 241-AY-102 to the atmosphere due to influx of cold water spray into tank which results in an excessive vacuum. A large flammable gas release is induced. It is then ignited resulting in a dome space fire.	1. Possible result of slurry distribution	SC: DST ventilation	LCO: DST and AWF ventilation sys AC: Flammability cntrls AC: Ignition cntrls AC: Flammable gas mon cntrls AC: Trans cntrls (mat balance and supernate removal)	None required	AC: Emergency Preparedness	Controls based on Flammable Gas JCO
W320-D-VENT16	Large high energy aerosolized waste release from Tank 241-AY-102 to the atmosphere due to the loss of primary or annulus ventilation for an extended period which results in a gradual rise in waste temperature. Flammable gas builds up in the dome space to the LFL. It is then ignited resulting in a dome space fire.	1. Extended loss of power 2. Severe ventilation casualty	SC: DST ventilation SC: Annulus ventilation syss	LCO: DST and AWF ventilation sys AC: Flammability cntrls AC: Ignition cntrls AC: Flammable gas mon cntrls AC: Trans cntrls (mat balance and supernate removal)	None required	AC: Emergency Preparedness	Controls based on Flammable Gas JCO

Table D-2. Safety SSCs and TSRs for Potentially Severe (E3 and E2) Environmental Consequences. (22 sheets)

ID	Hazardous Conditions	Candidate Causes	Prev SSC	Prev TSR	Mit SSC	Mit TSR	Cont Memo
W320-D-VENT17	Release of high energy aerosolized release to the atmosphere due to an ice storm which prevents air inflow into Tank 241-AY-102 resulting in an excessive tank vacuum. This results in a flammable gas release with ignition.	1. Natural phenomena	SC: DST ventilation	LCO: DST and AWF ventilation sys AC: Flammability cntrls AC: Ignition cntrls AC: Flammable gas mon cntrls AC: Trans cntrls (mat balance and supernate removal)	None required	AC: Emergency Preparedness	Controls based on Flammable Gas JCO
W320-D-VENT18	Large high energy radioactive aerosolized waste release from Tank 241-AY-102 to the atmosphere due to volcanic ashfall which prevents air inflow to tank. Excessive vacuum results and flammable gas is released to the dome space. It is then ignited resulting in a dome space fire.	1. Natural phenomena	SC: DST ventilation	LCO: DST and AWF ventilation sys AC: Flammability cntrls AC: Ignition cntrls AC: Flammable gas mon cntrls AC: Trans cntrls (mat balance and supernate removal)	None required	AC: Emergency Preparedness	Controls based on Flammable Gas JCO
W320-D-VENT20	Release of energetic radioactive aerosol from collapsed Tank 241-C-106 due to incorrect alignment of new ventilation system through sluice nozzle resulting in excessive tank vacuum with loop seal failure.	1. Operator error 2. Communications error	None required	None required	None required	None required	No controls required based on accident analysis (Tank Failure Due to Vacuum or Degradation)
W320-E-TERM03	Large high energy radioactive aerosolized waste release from Tank 241-AY-102 to the atmosphere due to lack of controls on operation of tank after it has been turned into a FG group 1 tank. It is ignited from a lightning strike or other event resulting in a dome space fire.	1. Inadequate prediction of waste behavior	SC: DST ventilation	LCO: DST and AWF ventilation sys AC: Flammability cntrls AC: Ignition cntrls AC: Flammable gas mon cntrls AC: Trans cntrls (mat balance and supernate removal)	None required	AC: Emergency Preparedness	Controls based on Flammable Gas JCO

Table D-2. Safety SSCs and TSRs for Potentially Severe (E3 and E2) Environmental Consequences. (22 sheets)

ID	Hazardous Conditions	Candidate Causes	Prev SSC	Prev TSR	Mit SSC	Mit TSR	Cont Memo
W320-F-TERM05	Release of liquid waste below grade and aerosol release to atmosphere due to high heat load after completion of sluicing process resulting in the need for water addition to Tank 241-C-106 with a deteriorated tank liner, water leakage into liner gap, steam formation, liner breach and steam bump.	1. Error in calculations	None required	LCS/LCO: SST Waste Temp Cntrls AC: Trans Cntrls (topog) AC: Proc Instru and Meas and Test Equip AC: Tank 241-C-106 Waste Temp Cntrls	None required	None required	Controls based on accident analysis (Steam Explosion between Steel Liner and Concrete Shell in Tank 241-C-106)

AC = Administrative control
AWF = Aging Waste Facility
DST = double-shell tank
JCO = Justification for Continued Operation
LCS/LCO = limiting control setting/limiting condition for operation
SC = Safety-Class
SS = Safety-Significant
SST = single-shell tank

LA-UR-92-3196, 1995, A Safety Assessment for Proposed Pump Mixing Operations to Mitigate Episodic Gas Releases in Tank 241-SY-101; Hanford Site, Richland, Washington, Rev. 14, Los Alamos National Laboratory, Los Alamos, New Mexico

Table D-3. Defense-in-Depth Controls for Potential S3 and S2 Consequences. (35 sheets)

ID	Hazardous Conditions	Candidate Causes	DID-Preventive	DID-Mitigative	Rep Acc W320
W320-BCD-TRANS01	Release of ionizing radiation and radioactive gas from Tank 241-C-106 due to a criticality event in the tank pump vortices	1. Natural occurrence if conditions are met	None	None	01
W320-BCD-TRANS02	Release of ionizing radiation and radioactive gas from Tank 241-C-106 due to a criticality event in the tank	1. Flushing valve misposition 2. Pump controller fault 3. Excessive solids in slurry flow	None	None	01X
W320-BCD-TRANS03	Release of ionizing radiation and radioactive gas from Tank 241-C-106 due to a criticality event in the tank	1. Primary failure of distributor 2. Severe water hammer 3. Severe thermal shock 4. Corrosion 5. Metal fatigue from vibration	None	None	01X
W320-BCD-TRANS04	Release of ionizing radiation and radioactive gas from Tank 241-C-106 due to a criticality event in the tank during sluicing	1. Natural occurrence if conditions are met	None	None	01X
W320-D-TERM01	Release of ionizing radiation and radioactive gas from Tank 241-AY-102 due to a criticality event in the tank	1. Natural occurrence if conditions are met	None	None	01X
W320-D-ALL01	Release of low energy radioactive aerosol through failed filters from Tank 241-AY-102 due to a steam bump	1. Human error 2. Communications error with other workers using the tank 3. IOSRs require activation of ALCs in event temperature above limit	HEPA filter Delta P alarm - where provided HEPA filter testing Heater over temperature - interlock/alarm where provided	HEPA Filter Delta P - low Delta P interlock HEPA Filter Replacement Sampler recorder	02
W320-ALL-TRANS01	Release of low energy radioactive aerosol through failed filters from Tank 241-AY-102 due to moisture buildup on ventilation system HEPA filters	1. Natural occurrence under proper conditions	HEPA filter Delta P alarm - where provided HEPA filter testing Heater over temperature - interlock/alarm where provided	HEPA Filter Delta P - low Delta P interlock HEPA Filter replacement Sampler recorder	02X

Table D-3. Defense-in-Depth Controls for Potential S3 and S2 Consequences. (35 sheets)

ID	Hazardous Conditions	Candidate Causes	DID-Preventive	DID-Mitigative	Rep Acc W320
W320-B-FLUSH01	Release of energetic radioactive aerosol from damaged Tank 241-C-106 single shell tank due to ignition of flammable gas plume and resulting filter breach induced by large water intrusion into tank.	1. Maintenance error 2. Communications error between different groups using the pit	HEPA filter Delta P alarm - where provided HEPA filter testing	HEPA Filter Delta P - low Delta P interlock HEPA Filter replacement Sampler recorder	02X
W320-B-FLUSH02	Release of low energy radioactive aerosol through failed filters due to a large steam bump in Tank 241-C-106 as a result of high tank vacuum resulting from flushing water spray condensing dome vapors.	1. Planned	HEPA filter Delta P alarm - where provided HEPA filter testing	HEPA Filter Delta P - low Delta P interlock HEPA Filter replacement Sampler recorder	02X
W320-B-FLUSH03	Release of low energy radioactive aerosol through failed filters of Tank 241-AY-102 due to a large steam bump as a result of high tank vacuum due to high condensation rate in tank from flushing water spray through antisiphon holes.	1. Planned	HEPA filter Delta P alarm - where provided HEPA filter testing	HEPA Filter Delta P - low Delta P interlock HEPA Filter replacement Sampler recorder	02X
W320-B-TRANS01	Release of small low energy aerosolized waste from the annulus of Tank 241-AY-102 due to steam pulses from boiling waste in annulus region which results in the failure of annulus filters. Waste leaks into annulus due to corrosion of primary tank from new waste composition.	1. Inadequate prediction of waste behavior	HEPA filter Delta P alarm - where provided HEPA filter testing	HEPA Filter Delta P - low Delta P interlock HEPA Filter replacement Sampler recorder	02X
W320-D-TRANS02	Release of low energy radioactive aerosol from largely intact Tank 241-C-106 due to excessive sluicer flow which results in radioactive air release through HEPAs.	1. Natural outcome if conditions are met	HEPA filter Delta P alarm - where provided HEPA filter testing	HEPA Filter Delta P - low Delta P interlock HEPA Filter replacement Sampler recorder	02X

Table D-3. Defense-in-Depth Controls for Potential S3 and S2 Consequences. (35 sheets)

ID	Hazardous Conditions	Candidate Causes	DID-Preventive	DID-Mitigative	Rep Acc W320
W320-D-VENT04	Release of small low energy radioactive aerosol through failed filters from Tank 241-AY-102 due to cold water spray into tank, tank vacuum and resulting tank bump	1. Possible result of slurry distribution	HEPA filter Delta P alarm - where provided HEPA filter testing Heater over temperature - interlock/alarm where provided	HEPA Filter Delta P - low Delta P interlock HEPA Filter replacement Sampler recorder	02X
W320-D-VENT07	Release of low energy radioactive aerosol from Tank 241-C-105/ Tank 241-C-106 ventilation system due to failure to determine ventilation leak during sluicing.	1. Ducting corrosion 2. Seal deterioration	Trans cntrls - waste compatibility cntrls Ign cntrls - vehicle speed limit cntrls	Plastic sleeves on aboveground ventilation flanges	03
W320-ABCD-CHILL01	Release of low energy radioactive aerosol from largely intact tank due to excessive cooling from process chiller and vacuum in Tank 241-C-106 from ventilation system which results in excedance of loop seal vacuum and unfiltered release.	1. Chiller control fault 2. High humidity	None	None	03X
W320-B-TRANS06	Release of low energy radioactive aerosol from largely intact Tank 241-AY-102 due to excessive slurry flow resulting in increased aerosol generation and errant flow release.	1. 3-way ball valve in flushing system not fully open 2. Pump controller fault	None	Plastic sleeves on aboveground ventilation flanges	03X
W320-B-TRANS07	Release of low energy radioactive aerosol from largely intact Tank 241-AY-102 due to startup of slurry flow to distributor resulting in air being bubbled through waste and release of vapor.	1. Normal procedure	Trans cntrls - waste compatibility cntrls	Plastic sleeves on aboveground ventilation flanges	03X

Table D-3. Defense-in-Depth Controls for Potential S3 and S2 Consequences. (35 sheets)

ID	Hazardous Conditions	Candidate Causes	DID-Preventive	DID-Mitigative	Rep Acc W320
W320-B-TRANS08	Release of low energy radioactive aerosol from largely intact Tank 241-AY-102 due to distributor breaking off which results in excessive aerosol generated in head space and release through HEPAs.	1. Primary failure of distributor 2. Severe Water hammer 3. Severe thermal shock 4. Corrosion 5. Metal fatigue from vibration	Trans cntrls - waste compatibility cntrls	Plastic sleeves on aboveground ventilation flanges	03X
W320-B-TRANS10	Release of low energy radioactive aerosol from largely intact Tank 241-AY-102 due to distributor breaking off which results in excessive aerosol generated in head space and release through HEPAs.	1. Primary failure of sluicer 2. Severe Water hammer 3. Severe thermal shock 4. Corrosion 5. Metal fatigue from vibration	Trans cntrls - waste compatibility cntrls	Plastic sleeves on aboveground ventilation flanges	03X
W320-B-TRANS11	Release of low energy radioactive aerosol from largely intact Tank 241-AY-102 due to excessive corrosion and heat loading from new waste.	1. Inadequate prediction of waste behavior	Trans cntrls - waste compatibility cntrls	Plastic sleeves on aboveground ventilation flanges	03X
W320-B-TRANS12	Release of low energy radioactive aerosol from interconnected tanks due to increased heat loading of Tank 241-AY-102 and loss of vacuum.	1. Inadequate prediction of waste behavior 2. Existing system cannot control flow rates from different tanks. Depends on inleakage 3. W030 system has lower exhaust capabilities	Trans cntrls - waste compatibility cntrls	Plastic sleeves on aboveground ventilation flanges	03X
W320-D-PURGE01	Release of low energy aerosolized waste from largely intact Tank 241-C-106 due to nitrogen line break and loss of vacuum.	1. Tube failure 2. Improper Assembly 3. Regulator fault	None	Plastic sleeves on aboveground ventilation flanges	03X
W320-D-TRANS04	Release of low energy radioactive aerosol from largely intact Tank 241-C-106 due to high temperature sluice water which increases head space pressure with increased errant flow.	1. High temperature in Tank 241-AY-102	Trans cntrls - waste compatibility cntrls	Plastic sleeves on aboveground ventilation flanges	03X

Table D-3. Defense-in-Depth Controls for Potential S3 and S2 Consequences. (35 sheets)

ID	Hazardous Conditions	Candidate Causes	DID-Preventive	DID-Mitigative	Rep Acc W320
W320-D-VENT08	Release of low energy radioactive aerosol from largely intact tank due to excessive vacuum in Tank 241-C-106 from new ventilation system which results in loop seal failure and unfiltered release.	1. Operator error 2. Communications error	None	None	03X
W320-D-VENT11	Release of low energy radioactive aerosol from largely intact tank due to excessive vacuum in Tank 241-C-106 from current ventilation system which results in loop seal failure and unfiltered release.	1. Operator error 2. Communications error	None	None	03X
W320-E-TERM01	Release of large high energy radioactive aerosol from Tank 241-AY-102 due to excessive fluffing of waste which results in tank structural damage and unfiltered release.	1. Inadequate prediction of waste behavior	Trans cntrls - waste compatibility cntrls	Plastic sleeves on aboveground ventilation flanges	03X
W320-ABCD-TRANS11	Release of energetic radioactive aerosol from transfer line in pit due to flammable gas collecting in pit and being ignited. Cover block lifted and falls onto piping in pit resulting in spray release.	1. Chimney through deep drop legs 2. 6 in. high capacity drain to dome space 3. Pit sealed to minimize inleakage	Fire prot prog Rad prot prog	Contam cntrl prog	04
W320-ABCD-CHILL02	Release of energetic radioactive aerosol from covered pit or deadend pipe due to propylene glycol spray leak into ventilation system of Tank 241-C-106 with ignition propagating into tank dome.	1. Piping or tubing leak	Fire prot prog Rad prot prog Vehicle position spotters Tank farm fences Vegetation cntrl prog	Contam cntrl prog	04X

Table D-3. Defense-in-Depth Controls for Potential S3 and S2 Consequences. (35 sheets)

ID	Hazardous Conditions	Candidate Causes	DID-Preventive	DID-Mitigative	Rep Acc W320
W320-BCD-ALL01	Release of energetic radioactive aerosol from covered pit on Tank 241-C-106 due to propylene glycol leak into pit with ignition.	1. Piping or tubing leak	Fire prot prog Rad prot prog Vehicle position spotters Tank farm fences Vegetation cntrl prog	Contam cntrl prog	04X
ANALYZED ACCIDENT: 5 - Caustic Spray Leak	This accident is analyzed and the results presented in the current BIO. An additional control has been included for Sodium Hydroxide cargo tanks to meet applicable DOT specifications.		Oper training TWRS Haz Material Prot Prog	Emerg resp plans and proc	05X
W320-ABCD-ALL01	Release of energetic radioactive aerosol from damaged tank due to flooding on top of Tank 241-C-106 dome	1. Raw water line rupture 2. Heavy rainfall	HASP procedure JCS procedure Oper training Oper procedures	Rad Prot Prog Emer Resp Plan/Procedures	06A
W320-ABCD-ALL02	Release of energetic radioactive aerosol from damaged tank due to flooding on top of Tank 241-AY-102 Tank dome	1. Raw water line rupture 2. Heavy rainfall	HASP procedure JCS procedure Oper training Oper procedures	Rad Prot Prog Emer Resp Plan/Procedures	06B
W320-ABCD-ALL03	Release of energetic radioactive aerosol from tank dome collapse due to flooding on top of tank dome	1. Raw water line rupture 2. Heavy rainfall	HASP procedure JCS procedure Oper training Oper procedures	Rad Prot Prog Emer Resp Plan/Procedures	06X
W320-B-ALL01	Release of a large amount of high energy aerosolized waste from Tank 241-C-106 dome collapse due to volcanic ashfall.	1. Natural phenomena	HASP procedure JCS procedure Oper training Oper procedures	Rad Prot Prog Emer Resp Plan/Procedures	06X
W320-B-ALL02	Release of a large amount of high energy aerosolized waste from Tank 241-AY-102 Tank dome collapse due to volcanic ashfall.	1. Natural phenomena	HASP procedure JCS procedure Oper training Oper procedures	Rad Prot Prog Emer Resp Plan/Procedures	06X
W320-B-ALL03	Release of high energy aerosolized waste to the atmosphere from Tank 241-C-106 dome collapse due to extreme snow fall.	1. Natural phenomena	HASP procedure JCS procedure Oper training Oper procedures	Rad Prot Prog Emer Resp Plan/Procedures	06X

Table D-3. Defense-in-Depth Controls for Potential S3 and S2 Consequences. (35 sheets)

ID	Hazardous Conditions	Candidate Causes	DID-Preventive	DID-Mitigative	Rep Acc W320
W320-B-ALL04	Release of large amount of high energy aerosolized waste from Tank-241-AY-102 Tank dome collapse due to extreme snow fall.	1. Natural phenomena	HASP procedure JCS procedure Oper training Oper procedures	Rad Prot Prog Emer Resp Plan/Procedures	06X
W320-B-ALL05	Release of energetic radioactive aerosol from Tank 241-C-106 dome collapse due to dome being overloaded.	1. Maintenance error 2. Procedure violation	Shutdown oper during high wind HASP procedure JCS procedure Oper training Oper procedures	Load absorber around riser Rad Prot Prog Emer Resp Plan/Procedures	06X
W320-B-ALL06	Release of energetic radioactive aerosol from Tank 241-AY-102 dome collapse due to dome being overloaded.	1. Maintenance error 2. Procedure violation	HASP procedure JCS procedure Oper training Oper procedures	Load absorber around riser Rad Prot Prog Emer Resp Plan/Procedures	06X
W320-D-TRANS03	Release of low energy radioactive aerosol from largely intact Tank 241-C-106 due to sluicer moving debris impacting drop leg in tank which breaches dome.	1. Expected outcome of high velocity sluicing Many objects are in the waste	HASP procedure JCS procedure Oper training Oper procedures	Rad Prot Prog Emer Resp Plan/Procedures	06X
W320-BCD-ALL03	Release of energetic radioactive aerosol from damaged Tank 241-C-106 due to excessive vacuum resulting from ventilation system fan overspeed and failure of tank loop seal failure.	1. Rotameter valve to controller fault 2. Operator error in adjusting rotameter or inadvertant adjustment	None	None	07A
W320-BCD-ALL02	Release of energetic radioactive aerosol from collapsed Tank 241-AY-102 due to excessive vacuum resulting from W030 ventilation system inlet damper closing and failure of PCV fails to relieve vacuum.	1. Rotameter valve to controller fault 2. Operator error in adjusting rotameter or inadvertant adjustment	None	None	07B

Table D-3. Defense-in-Depth Controls for Potential S3 and S2 Consequences. (35 sheets)

ID	Hazardous Conditions	Candidate Causes	DID-Preventive	DID-Mitigative	Rep Acc W320
W320-ABCD-CHILL03	Release of energetic radioactive aerosol from collapsed Tank 241-C-106 due to excessive cooling from process chiller which restricts inflow and loop seal fails to operate.	1. Chiller control fault 2. High humidity	None	None	07X
W320-B-FLUSH04	Release of low energy radioactive aerosol from breached Tank 241-C-106 due to flushing water spray through sluice nozzle resulting in excessive tank vacuum.	1. Planned	None	None	07X
W320-B-FLUSH05	Release of low energy radioactive aerosol from largely intact Tank 241-AY-102 due to flushing water spray thru antisiphon holes resulting in excessive vacuum in tank and tank breach.	1. Planned	None	None	07X
W320-B-VENT01	Release of low energy radioactive aerosol from largely intact Tank 241-AY-102 due to volcanic ashfall which prevents air intake through existing ventilation system with W030 intake resulting in excessive vacuum and tank breach.	1. Natural phenomena	None	None	07X
W320-B-VENT02	Release of low energy radioactive aerosol from largely intact Tank 241-AY-102 due to volcanic ashfall which prevents air intake through W030 ventilation upgrade system resulting in excessive vacuum and tank breach.	1. Natural phenomena	None	None	07X

Table D-3. Defense-in-Depth Controls for Potential S3 and S2 Consequences. (35 sheets)

ID	Hazardous Conditions	Candidate Causes	DID-Preventive	DID-Mitigative	Rep Acc W320
W320-B-VENT03	Release of low energy radioactive aerosol from breached Tank 241-AY-102 due to ice storm which prevents air inflow through W030 ventilation upgrade and results in excessive vacuum.	1. Natural phenomena	None	None	07X
W320-B-VENT04	Release of low energy radioactive aerosol from breached Tank 241-AY-102 due to ice storm which prevents air inflow through existing exhaust system with W030 intake and results in excessive vacuum.	1. Natural phenomena	None	None	07X
W320-B-VENT05	Release of low energy radioactive aerosol from largely intact Tank 241-AY-102 due to cold water spray into tank which results in excessive vacuum and tank breach.	1. Possible result of slurry distribution	None	None	07X
W320-B-VENT06	Release of low energy radioactive aerosol from breached Tank 241-AY-102 due to ice storm which prevents air inflow through existing ventilation system and results in excessive vacuum.	1. Natural phenomena	None	None	07X
W320-B-VENT07	Release of low energy radioactive aerosol from largely intact tank due to volcanic ashfall preventing air inflow into Tank 241-AY-102 through existing ventilation system resulting in tank breach.	1. Natural phenomena	None	None	07X

Table D-3. Defense-in-Depth Controls for Potential S3 and S2 Consequences. (35 sheets)

ID	Hazardous Conditions	Candidate Causes	DID-Preventive	DID-Mitigative	Rep Acc W320
W320-BCD-ALL04	Release of low energy radioactive aerosol from largely intact Tank 241-C-106 due to fan controller failure resulting in excessive vacuum in tank and loop seal actuation.	1. Rotameter valve to controller fault 2. Operator error in adjusting rotameter or inadvertant adjustment	None	None	07X
W320-D-VENT12	Release of energetic radioactive aerosol from collapsed Tank 241-C-106 due to incorrect alignment of current ventilation system through sluice nozzle resulting in excessive tank vacuum with loop seal failure.	1. Operator error 2. Communications error	None	None	07X
W320-D-VENT20	Release of energetic radioactive aerosol from collapsed Tank 241-C-106 due to incorrect alignment of new ventilation system through sluice nozzle resulting in excessive tank vacuum with loop seal failure.	1. Operator error 2. Communications error	None	None	07X
W320-D-ALL07	Release of energetic radioactive aerosol from damaged double shell Tank 241-AY-102 due to seismic event which releases flammable gas from the waste and after shocks cause mechanical sparks which ignites the flammable gas mixture.	1. Natural Phenomena	Mon dome pressure in Tank 241-AY-102 Mon vent flow rate in tanks	None	08A
W320-BCD-PUMP04	Release of energetic radioactive aerosol to atmosphere due to submersible pump being raised too high in Tank 241-AY-102, winch lifting strap breaking, pump falling into waste resulting in a flammable gas release which is ignited by broken electrical cables.	1. Operator error in positioning direction 2. Inadvertant or accidental actuation 3. Winch controller fault	Mon dome pressure in Tank 241-AY-102 Mon vent flow rate in tanks	None	08B

Table D-3. Defense-in-Depth Controls for Potential S3 and S2 Consequences. (35 sheets)

ID	Hazardous Conditions	Candidate Causes	DID-Preventive	DID-Mitigative	Rep Acc W320
W320-A-TRANS05	Release of energetic radioactive aerosol to atmosphere due to temperature out of specification resulting in steam bump when Tank 241-C-106 level is lowered which induces a release of a flammable gas plume and then is ignited.	1. Operator mistake 2. Temperature measurement fault	Mon dome pressure in Tank 241-C-106 Meas background conc for 3-4 weeks prior to sluicing Mon vent flow rate in tanks	None	08C
W320-A-TRANS04	Release of large high energy aerosolized waste from Tank 241-C-106 due to high waste temperature during slurry transfer which results in a steam bump. Bump induces flammable gas release which is ignited resulting in a dome burn.	1. Flowmeters fault or out of calibration 2. Operator error in positioning Tank 241-C-106 pump 3. Inadvertant or accidental actuation of Tank 241-C-106 pump but not Tank 241-AY-102 pump 4. ENRAF level indication fault 5. Pump controller fault 6. Tank 241-C-106 T/C fault	Mon dome pressure in Tank 241-C-106 Mon vent flow rate in tanks	None	08X
W320-ABCDF-ALL01*	Release of energetic radioactive aerosol to atmosphere due to buildup of flammable gas in Tank 241-AY-102 pit drain pipe which is then ignited.	1. Flammable gas generation from tank waste	Mon dome pressure in Tank 241-AY-102 Mon vent flow rate in tanks	None	08X
W320-B-ALL07	Small low energy aerosolized waste release from largely intact tank due to flammable gas collecting in a Tank 241-C-106 pit where it is ignited resulting in the cover blocks being displaced and falling into pit. Cover block strikes riser-liner joint resulting in an unfiltered release from dome space.	1. Chimney through deep drop legs 2. 6 in. high capacity drain to dome space 3. Pit sealed to minimize inleakage	Mon dome pressure in Tank 241-C-106 and Tank 241-AY-102 Video mon of waste in Tank 241-AY-102 Meas background concentrations for 3-4 weeks prior to sluicing Mon vent flow rate in tanks Mon level growth	None	08X

Table D-3. Defense-in-Depth Controls for Potential S3 and S2 Consequences. (35 sheets)

ID	Hazardous Conditions	Candidate Causes	DID-Preventive	DID-Mitigative	Rep Acc W320
W320-B-ALL08	Large high energy radioactive aerosolized waste release from Tank 241-AY-102 due to a large water intrusion which induces a flammable gas release event. It is then ignited resulting in a dome space fire.	1. Raw water leak 2. Surface water flood	Mon dome pressure in Tank 241-AY-102 Video mon of waste in Tank 241-AY-102 Mon vent flow rate in tanks Mon level growth	None	08X
W320-B-TERM01	Release of toxic ammonia gas from tank due to burp which exposes facility personnel to toxic gases.	1. Inadequate prediction of waste behavior	Mon dome pressure in Tank 241-C-106 and Tank 241-AY-102 Video mon of waste in Tank 241-AY-102 Mon vent flow rate in tanks	None	08X
W320-B-TRANS13	Small low energy aerosolized waste release from largely intact tank due to flammable gas collecting in a Tank 241-AY-102 pit where it is ignited resulting in the cover blocks being displaced and falling into pit. Cover block strikes riser-liner joint resulting in an unfiltered release from dome space.	1. Chimney through deep drop legs 2. 6 in. high capacity drain to dome space 3. Pit sealed to minimize inleakage	Mon vent flow rate in tanks	None	08X
W320-B-TRANS14	Large high energy radioactive aerosolized waste release from Tank 241-AY-102 to the atmosphere due to low slurry flow to distributor which results in solids piling up. Pile generates significant amount of flammable gas and LFL is reached in dome space. It is then ignited resulting in a dome space fire.	1. 3-way ball valve in flushing system not fully open 2. Pump controller fault	Mon dome pressure in Tank 241-AY-102 Video mon of waste in Tank 241-AY-102 Meas background concentrations for 3-4 weeks prior to sluicing Mon vent flow rate in tanks	None	08X

Table D-3. Defense-in-Depth Controls for Potential S3 and S2 Consequences. (35 sheets)

ID	Hazardous Conditions	Candidate Causes	DID-Preventive	DID-Mitigative	Rep Acc W320
W320-B-TRANS15	Large high energy aerosolized waste release from Tank 241-AY-102 to the atmosphere due to air injected into the waste from the startup of slurry flow from the distributor. Gas is scrubbed from the waste and LFL is reached in dome space. It is then ignited resulting in a dome space fire.	1. Normal procedure	Mon dome pressure in Tank 241-AY-102 Video mon of waste in Tank 241-AY-102 Meas background concentrations for 3-4 weeks prior to sluicing Mon vent flow rate in tanks	None	08X
W320-B-TRANS16	Large high energy radioactive aerosolized waste release from Tank 241-AY-102 to the atmosphere due to distributor nozzle breaking off which results in solids piling up. Pile generates significant amount of flammable gas and LFL is reached in dome space. It is then ignited resulting in a dome space fire.	1. Primary failure of distributor 2. Severe water hammer 3. Severe thermal shock 4. Corrosion 5. Metal fatigue from vibration	Mon dome pressure in Tank 241-AY-102 Video mon of waste in Tank 241-AY-102 Meas background concentrations for 3-4 weeks prior to sluicing Mon vent flow rate in tanks Mon level growth	None	08X
W320-B-TRANS17	Release of high energy aerosolized waste from damaged Tank 241-C-106 due to the sluicer hose breaking which then impinges into the solids releasing a region of retained flammable gas. The gas is then ignited and a plume fire results.	1. Primary failure of Hose 2. Severe Water hammer 3. Severe thermal shock 4. Corrosion 5. Fatigue from vibration	Mon dome pressure in Tank 241-C-106 Mon vent flow rate in tanks	None	08X
W320-B-TRANS18	Release of large high energy aerosolized waste to the atmosphere due to sluice water transfer rate being excessive resulting in the Tank 241-C-106 waste level being lowered quickly with the waste temperature too high. This results in a large steam bump and flammable gas release with a plume burn.	1. Flowmeters fault or out of calibration 2. Operator error in positioning Tank 241-C-106 pump 3. Inadvertant or accidental actuation of Tank 241-C-106 pump but not Tank 241-Ay-102 pump 4. ENRAF level indication fault 5. Pump controller fault 6. Tank 241-C-106 T/C fault	Mon dome pressure in Tank 241-C-106 Meas background concentrations for 3-4 weeks prior to sluicing Mon vent flow rate in tanks	None	08X

Table D-3. Defense-in-Depth Controls for Potential S3 and S2 Consequences. (35 sheets)

ID	Hazardous Conditions	Candidate Causes	DID-Preventive	DID-Mitigative	Rep Acc W320
W320-BCD-ALL05	Small high energy aerosolized waste release to the atmosphere due to buildup of solids and flammable gas in transfer line . Gas is then ignited resulting in a breach of transfer line. Pumping is started without knowledge of breach.	1. Low flow 2. Inadequate flushing	Mon dome pressure in Tank 241-C-106 Mon vent flow rate in tanks	None	08X
W320-BCD-ALL06	Small high energy aerosolized waste release to the atmosphere due to buildup of solids and flammable gas in transfer line . Gas is then ignited and detonates resulting in a breach of transfer line. Pumping is started without knowledge of breach.	1. Low flow 2. Inadequate flushing	None	None	08X
W320-BCD-ALL10	Small high energy aerosolized waste release to the atmosphere due to plugging and buildup of flammable gas in transfer line . Gas is then ignited resulting in a breach of transfer line. Pumping is started without knowledge of breach.	1. Low flow 2. Inadequate flushing	None	None	08X
W320-BCD-PUMP03	Release of small high energy aerosol to atmosphere due to immersible pump being raised too high in Tank 241-AY-102, winch lifting strap breaking, pump falling into waste results in a flammable gas release which is ignited by broken electrical cables, plume burn.	1. Operator error in positioning direction 2. Inadvertant or accidental actuation 3. Winch controller fault	Mon dome pressure in Tank 241-AY-102 Video mon of waste in Tank 241-AY-102 Mon vent flow rate in tanks	None	08X

Table D-3. Defense-in-Depth Controls for Potential S3 and S2 Consequences. (35 sheets)

ID	Hazardous Conditions	Candidate Causes	DID-Preventive	DID-Mitigative	Rep Acc W320
W320-BCD-PUMP05	Release of small high energy aerosol to atmosphere due to immersible pump being raised too high in Tank 241-C-106, motor breaks gear assembly, pump freespools into waste resulting in a flammable gas release which is ignited by broken electrical cables, plume burn.	1. Operator error in positioning direction 2. Inadvertant or accidental actuation 3. Winch controller fault	Mon dome pressure in Tank 241-C-106 Mon vent flow rate in tanks	None	08X
W320-BCD-PUMP09	Release of large high energy aerosolized waste to atmosphere due to immersible pump being raised too high in Tank 241-C-106, winch lifting strap breaking, pump falling into waste results in a flammable gas release which is ignited by broken electrical cables, plume burn.	1. Operator error in positioning direction 2. Inadvertant or accidental actuation 3. Winch controller fault	Mon dome pressure in Tank 241-C-106 Mon vent flow rate in tanks	None	08X
W320-D-ALL08	Release of energetic radioactive aerosol to atmosphere due to start of air lift circulators in Tank 241-AY-102 resulting in a release of flammable gas plume which is then ignited.	1. Human error 2. Communications error with other workers using the tank 3. IOSRs require activation of ALCs in event temperature above limit	Mon dome pressure in Tank 241-AY-102 Video mon of waste in Tank 241-AY-102 Meas background concentrations for 3-4 weeks prior to sluicing Mon vent flow rate in tanks Mon level growth	None	08X
W320-D-PUMP04	Release of energetic radioactive aerosol from damaged Tank 241-AY-102 due to pumping of more solids than anticipated. Annulus cooling mod not completed resulting in overheating of waste and a tank bump. Bump induces large flammable gas release. It is then ignited resulting in a dome space fire.	1. Mass flowmeter fault or out of calibration 2. Operator error in positioning slurry pump 3. Inadvertant or accidental repositioning 4. Level indication fault 5. Waste level indicator on pump Tank 241-C-106 fault 6. Pump controller fault	Mon dome pressure in Tank 241-AY-102 Video mon of waste in Tank 241-AY-102 Mon vent flow rate in tanks	None	08X

Table D-3. Defense-in-Depth Controls for Potential S3 and S2 Consequences. (35 sheets)

ID	Hazardous Conditions	Candidate Causes	DID-Preventive	DID-Mitigative	Rep Acc W320
W320-D-TRANS05	Release of energetic radioactive aerosol to atmosphere due to head space gas concentration above LFL in Tank 241-AY-102 with the start of pumping which ignites the flammable gas.	1. Spontaneous GRE 2. Induced GRE	Mon dome pressure in Tank 241-AY-102 Video mon of waste in Tank 241-AY-102 Meas background concentrations for 3-4 weeks prior to sluicing Mon vent flow rate in tanks	None	08X
W320-D-TRANS06	Release of large high energy aerosolized waste to the atmosphere due to slurry transfer rate being excessive resulting in a rapid reduction in the hydrostatic pressure in Tank 241-C-106. This results in a flammable gas release. Gas is ignited and a dome space fire results.	1. Sluice flow control fault	Mon dome pressure in Tank 241-C-106 Mon vent flow rate in tanks	None	08X
W320-D-TRANS07	Release of high energetic aerosolized waste to the atmosphere due to sluice water transfer rate being excessive resulting in the Tank 241-AY-102 waste level being lowered quickly with the waste temperature too high. This results in a large steam bump and flammable gas release with ignition.	1. Operator mistake 2. Level indication fault 3. Pump controller fault	Mon dome pressure in Tank 241-AY-102 Video mon of waste in Tank 241-AY-102 Meas background concentrations for 3-4 weeks prior to sluicing Mon vent flow rate in tanks	None	08X
W320-D-VENT13	Large high energy radioactive aerosolized waste release from Tank 241-AY-102 to the atmosphere due to influx of cold water spray into tank which results in an excessive vacuum. A large flammable gas release is induced. It is then ignited resulting in a dome space fire.	1. Possible result of slurry distribution	Mon dome pressure in Tank 241-C-106 and Tank 241-AY-102 Video mon of waste in Tank 241-AY-102 Meas background concentrations for 3-4 weeks prior to sluicing Mon vent flow rate in tanks	None	08X

Table D-3. Defense-in-Depth Controls for Potential S3 and S2 Consequences. (35 sheets)

ID	Hazardous Conditions	Candidate Causes	DID-Preventive	DID-Mitigative	Rep Acc W320
W320-D-VENT14	Small high energy aerosolized waste release from Tank 241-AY-102 to the atmosphere due to the loss of primary or annulus ventilation for an extended period which results in a gradual rise in waste temperature. Flammable gas leaks into annulus. It is then ignited resulting in the annulus being breached.	1. Extended loss of power 2. Severe ventilation casualty	Mon dome pressure in Tank 241-AY-102 Mon vent flow rate in tanks	None	08X
W320-D-VENT15	Small low energy radioactive aerosolized waste release from standpipes in Tank 241-AY-102 due to flammable gas buildup where it is ignited resulting in the pipe being breached resulting in an unfiltered release.	1. Natural occurrence under proper conditions	Mon dome pressure in Tank 241-AY-102 Video mon of waste in Tank 241-AY-102 Mon vent flow rate in tanks	None	08X
W320-D-VENT16	Large high energy aerosolized waste release from Tank 241-AY-102 to the atmosphere due to the loss of primary or annulus ventilation for an extended period which results in a gradual rise in waste temperature. Flammable gas builds up in the dome space to the LFL. It is then ignited resulting in a dome space fire.	1. Extended loss of power 2. Severe ventilation casualty	Mon dome pressure in Tank 241-AY-102 Video mon of waste in Tank 241-AY-102 Meas background concentrations for 3-4 weeks prior to sluicing Mon vent flow rate in tanks	None	08X
W320-D-VENT17	Release of high energy aerosolized release to the atmosphere due to an ice storm which prevents air inflow into Tank 241-AY-102 resulting in an excessive tank vacuum. This results in a flammable gas release with ignition.	1. Natural phenomena	Mon dome pressure in Tank 241-AY-102 Mon vent flow rate in tanks	None	08X

Table D-3. Defense-in-Depth Controls for Potential S3 and S2 Consequences. (35 sheets)

ID	Hazardous Conditions	Candidate Causes	DID-Preventive	DID-Mitigative	Rep Acc W320
W320-D-VENT18	Large high energy radioactive aerosolized waste release from Tank 241-AY-102 to the atmosphere due to volcanic ashfall which prevents air inflow to tank. Excessive vacuum results and flammable gas is released to the dome space. It is then ignited resulting in a dome space fire.	1. Natural phenomena	Mon dome pressure in Tank 241-AY-102 Mon vent flow rate in tanks	None	08X
W320-E-TERM03	Large high energy radioactive aerosolized waste release from Tank 241-AY-102 to the atmosphere due to lack of controls on operation of tank after it has been turned into a FG group 1 tank. It is ignited from a lightning strike or other event resulting in a dome space fire.	1. Inadequate prediction of waste behavior	Mon dome pressure in Tank 241-AY-102 Video mon of waste in Tank 241-AY-102 Mon vent flow rate in tanks	None	08X
W320-B-ALL09	Release of energetic radioactive aerosol from damaged tank due to formation of organic layer in Tank 241-AY-102 during slurry distribution and subsequent ignition of organics.	1. Sluicing causes organic separation	Vehicle position spotters Tank farm fences	HEPA filter replacement	09A
W320-B-ALL10	Release of energetic radioactive aerosol from damaged tank due to formation of organic layer in Tank 241-C-106 during sluicing and subsequent ignition of organics.	1. Sluicing causes organic separation	Vehicle position spotters Tank farm fences	HEPA filter replacement	09B
W320-A-TRANS06	Release of energetic radioactive aerosol from damaged tank due to waste temperature being out of specification during start of slurry transfer in Tank 241-C-106 and subsequent ignition of organics.	1. Operator mistake 2. Temperature measurement fault	Vehicle position spotters Tank farm fences	HEPA filter replacement	09X

Table D-3. Defense-in-Depth Controls for Potential S3 and S2 Consequences. (35 sheets)

ID	Hazardous Conditions	Candidate Causes	DID-Preventive	DID-Mitigative	Rep Acc W320
W320-B-VENT08	Release of energetic radioactive aerosol from damaged tank due to loss of Tank 241-C-106 ventilation for many months, dry out of waste and subsequent ignition of organics.	1. Loss of power 2. Equipment casualty	Vehicle position spotters Tank farm fences	HEPA filter replacement	09X
W320-B-VENT09*	Release of energetic radioactive aerosol from damaged tank due to loss of Tank 241-AY-102 ventilation for many months, dry out of waste and subsequent ignition of organics.	1. Loss of power 2. Equipment casualty	Vehicle position spotters Tank farm fences	HEPA filter replacement	09X
W320-D-CHILL01	Release of energetic radioactive aerosol from damaged tank due to a leak and ignition of propylene glycol from pit chiller into Tank 241-C-106.	1. Piping or tubing leak	Vehicle position spotters Tank farm fences	HEPA filter replacement	10
W320-ALL-VENT01	Release of energetic radioactive aerosol from breached ventilation duct for Tank 241-AY-102 due to a buildup of ammonium nitrate in ventilation ducting and ignition via hot work, range fire etc.	1. Natural occurrence under proper conditions	None	HEPA filter replacement	10X
W320-D-CHILL02	Release of energetic radioactive aerosol from damaged tank due to a leak and ignition of propylene glycol from ventilation chiller into Tank 241-C-106.	1. Piping or tubing leak	Vehicle position spotters Tank farm fences	HEPA filter replacement	10X
W320-D-VENT01	Release of energetic radioactive aerosol from filter breach due to a buildup of ammonium nitrate in ventilation ducting of Tank 241-AY-102 and ignition via hot work, range fire etc.	1. Natural occurrence under proper conditions	Vehicle position spotters Tank farm fences	HEPA filter replacement	10X

Table D-3. Defense-in-Depth Controls for Potential S3 and S2 Consequences. (35 sheets)

ID	Hazardous Conditions	Candidate Causes	DID-Preventive	DID-Mitigative	Rep Acc W320
W320-D-TRANS08	Release of low energy radioactive aerosol through failed filters due to excessive fluffing of waste in Tank 241-AY-102 resulting in large steam bump and unfiltered release.	1. Inadequate prediction of waste behavior	Communications during sluicing Tank 241-C-106 waste to be chilled Maintain levels in tanks during first two increments of solids removal	Cover blocks in place prior to sluicing Emer Resp Plan/Procedures	11
W320-A-TRANS01	Release of low energy radioactive aerosol through failed filters from Tank 241-C-106 due to a large steam bump	1. Flowmeters fault or out of calibration 2. Operator error in positioning Tank 241-C-106 pump 3. Inadvertant or accidental actuation of Tank 241-C-106 pump but not Tank 241-AY-102 pump 4. ENRAF level indication fault 5. Pump controller fault 6. Tank 241-C-106 T/C fault	Communications during sluicing Tank 241-C-106 waste to be chilled Maintain levels in tanks during first two increments of solids removal	Cover blocks in place prior to sluicing Emer Resp Plan/Procedures	11X
W320-A-TRANS02	Release of low energy radioactive aerosol through failed filters from Tank 241-AY-102 due to lowering of tank level with temperature out of spec resulting in tank bump	1. Flowmeters fault or out of calibration 2. Operator error in positioning Tank 241-C-106 pump 3. ENRAF level indication fault 4. Pump controller fault 5. Tank 241-C-106 T/C fault	Communications during sluicing Tank 241-C-106 waste to be chilled	Cover blocks in place prior to sluicing Emer Resp Plan/Procedures	11X
W320-A-TRANS03	Release of low energy radioactive aerosol through failed filters from Tank 241-AY-102 due to high waste temperature during slurry transfer and resulting steam bump.	1. Inadvertant or accidental actuation of Tank 241-C-106 pump but not Tank 241-AY-102 pump	Disable ALCs prior to start of sluicing Communications during sluicing Tank 241-C-106 waste to be chilled Transfer pumps locked out Maintain levels in tanks during first two increments of solids removal	Cover blocks in place prior to sluicing Emer Resp Plan/Procedures	11X

Table D-3. Defense-in-Depth Controls for Potential S3 and S2 Consequences. (35 sheets)

ID	Hazardous Conditions	Candidate Causes	DID-Preventive	DID-Mitigative	Rep Acc W320
W320-B-PUMP01	Release of low energy radioactive aerosol from Tank 241-AY-102 through failed filters due to overheating of waste and subsequent steam bump	1. Mass flowmeter fault or out of calibration 2. Operator error in positioning 3. Inadvertant or accidental repositioning 4. Level indication fault 5. Waste level indicator on pump fault 6. Pump controller fault	Communications during sluicing Tank 241-C-106 waste to be chilled	Cover blocks in place prior to sluicing Emer Resp Plan/Procedures	11X
W320-B-TRANS02	Release of low energy radioactive aerosol through failed filters from Tank 241-AY-102 due to low slurry flow, piling of waste at base of distributor and resulting tank bump	1. 3-way ball valve in flushing system not fully open 2. Pump controller fault 3. Excessive solids in sluicing flow	Communications during sluicing Maintain levels in tanks during first two increments of solids removal	Cover blocks in place prior to sluicing Emer Resp Plan/Procedures	11X
W320-B-TRANS03	Release of low energy radioactive aerosol through failed filters due to condensation of vapor in head space of Tank 241-C-106 which resulted from the breaking off of sluicer head.	1. Primary failure of sluicer 2. Severe Water hammer 3. Severe thermal shock 4. Corrosion 5. Metal fatigue from vibration	Communications during sluicing Tank 241-C-106 waste to be chilled	Cover blocks in place prior to sluicing Emer Resp Plan/Procedures	11X
W320-B-TRANS04	Release of low energy radioactive aerosol through failed filters from Tank 241-C-106 due to high slurry transfer rate, high waste temperature and resulting tank bump	1. Flowmeters fault or out of calibration 2. Operator error in positioning Tank 241-C-106 pump 3. Inadvertant or accidental actuation of Tank 241-C-106 pump but not Tank 241-AY-102 pump 4. ENRAF level indication fault 5. Pump controller fault 6. Tank 241-C-106 T/C fault	Communications during sluicing Tank 241-C-106 waste to be chilled Maintain levels in tanks during first two increments of solids removal	Cover blocks in place prior to sluicing Emer Resp Plan/Procedures	11X

Table D-3. Defense-in-Depth Controls for Potential S3 and S2 Consequences. (35 sheets)

ID	Hazardous Conditions	Candidate Causes	DID-Preventive	DID-Mitigative	Rep Acc W320
W320-B-TRANS05	Release of low energy radioactive aerosol from largely intact Tank 241-AY-102 due to buildup of solids pile under distributor as a result of low slurry flow which results in steam bump and increased head space vapor pressure.	1. 3-way ball valve in flushing system not fully open 2. Pump controller fault 3. Excessive solids in sluicing flow	Communications during sluicing Maintain levels in tanks during first two increments of solids removal	Cover blocks in place prior to sluicing Emer Resp Plan/Procedures	11X
W320-B-TRANS09	Release of low energy radioactive aerosol from largely intact Tank 241-AY-102 due to buildup of solids pile under distributor as a result of the distributor nozzle breaking off which results in steam bump and increased head space vapor pressure.	1. Primary failure of distributor 2. Severe water hammer 3. Severe thermal shock 4. Corrosion 5. Metal fatigue from vibration	Communications during sluicing Maintain levels in tanks during first two increments of solids removal	Cover blocks in place prior to sluicing Emer Resp Plan/Procedures	11X
W320-BCD-TRANS05	Release of low energy radioactive aerosol through failed filters due to tank bump in Tank 241-AY-102 resulting from the vacuum developed in the head space from the condensation of vapor which resulted from the breaking off of distributor head.	1. Primary failure of distributor 2. Severe Water hammer 3. Severe thermal shock 4. Corrosion 5. Metal fatigue from vibration	Communications during sluicing	Cover blocks in place prior to sluicing Emer Resp Plan/Procedures	11X
W320-BCD-TRANS06	Release of low energy radioactive aerosol through failed filters of Tank 241-AY-102 due to tank bump resulting from the which resulted from the breaking off of distributor head.	1. Primary failure of distributor 2. Severe water hammer 3. Severe thermal shock 4. Corrosion 5. Metal fatigue from vibration	Communications during sluicing	Cover blocks in place prior to sluicing Emer Resp Plan/Procedures	11X

Table D-3. Defense-in-Depth Controls for Potential S3 and S2 Consequences. (35 sheets)

ID	Hazardous Conditions	Candidate Causes	DID-Preventive	DID-Mitigative	Rep Acc W320
W320-BCD-TRANS07	Release of low energy radioactive aerosol through failed filters of Tank C-106 due to failure of T/C Tree, sluicing outside of temperature specs, atmospheric change, and large steam bump resulting in filter breach.	1. Sluice flow control fault 2. Operator error	Communications during sluicing Tank 241-C-106 waste to be chilled	Cover blocks in place prior to sluicing Emer Resp Plan/Procedures	11X
W320-BCD-TRANS08	Release of low energy radioactive aerosol through failed filters from Tank C-106 due to undetected high waste temperature and resulting tank bump	1. Expected outcome of high pressure sluice. Many objects are in the waste.	Communications during sluicing Tank 241-C-106 waste to be chilled	Cover blocks in place prior to sluicing Emer Resp Plan/Procedures	11X
W320-D-ALL02	Release of low energy radioactive aerosol through failed filters from Tank 241-AY-102 due to barometric pressure change, high waste temperature and resulting tank bump	1. Ventilation balance upset 2. Sudden barometric pressure change 3. Low intensity seismic event	Communications during sluicing Tank 241-C-106 waste to be chilled	Cover blocks in place prior to sluicing Emer Resp Plan/Procedures	11X
W320-D-ALL03	Release of low energy radioactive aerosol from Tank 241-AY-102 through failed filters due to bump in interconnected tank resulting in a tank bump and filter breach.	1. Ventilation balance upset 2. Sudden barometric pressure change 3. Low intensity seismic event	Communications during sluicing	Cover blocks in place prior to sluicing Emer Resp Plan/Procedures	11X
W320-D-ALL04	Release of low energy radioactive aerosol from Tank 241-AY-102 through failed filters due to bump in interconnected tank resulting in a tank bump and filter breach.	1. Ventilation balance upset 2. Sudden barometric pressure change 3. Low intensity seismic event	Communications during sluicing	Cover blocks in place prior to sluicing Emer Resp Plan/Procedures	11X
W320-D-ALL05	Release of low energy radioactive aerosol through failed filters from Tank 241-AY-102 due to long term loss of ventilation system resulting in tank bump and blowout of filters.	1. Loss of power 2. Equipment casualty	Communications during sluicing Tank 241-C-106 waste to be chilled Maintain levels in tanks during first two increments of solids removal	Cover blocks in place prior to sluicing Emer Resp Plan/Procedures	11X

Table D-3. Defense-in-Depth Controls for Potential S3 and S2 Consequences. (35 sheets)

ID	Hazardous Conditions	Candidate Causes	DID-Preventive	DID-Mitigative	Rep Acc W320
W320-D-TRANS01	Release of low energy radioactive aerosol through failed filters from Tank 241-AY-102 due to rapid waste level change, high waste temperature and resulting tank bump	1. Flowmeters fault or out of calibration 2. Operator error in positioning Tank 241-AY-102 pump 3. Inadvertant or accidental actuation of Tank 241-AY-102 pump but not Tank 241-C-106 pump 4. ENRAF level indication fault 5. Pump controller fault	Communications during sluicing Tank 241-C-106 waste to be chilled Maintain levels in tanks during first two increments of solids removal	Cover blocks in place prior to sluicing Emer Resp Plan/Procedures	11X
W320-D-VENT02	Release of low energy radioactive aerosol from Tank 241-AY-102 through failed filters due to inadequate ventilation from W030 resulting in increased waste temperature, steam bump and filter breach.	1. Error in calculations 2. Design error 3. Construction fault	Communications during sluicing	Cover blocks in place prior to sluicing Emer Resp Plan/Procedures	11X
W320-D-VENT03	Release of low energy radioactive aerosol through failed filters in the 702A ventilation system of Tank 241-AY-102 due to severe ice storm, excessive tank vacuum and resulting tank bump	1. Natural phenomena	None	Cover blocks in place prior to sluicing Emer Resp Plan/Procedures	11X
W320-D-VENT05	Release of low energy radioactive aerosol through failed filters in the W030 ventilation system due to severe ice storm, excessive tank vacuum and resulting tank bump.	1. Natural phenomena	None	Cover blocks in place prior to sluicing Emer Resp Plan/Procedures	11X
W320-D-VENT06	Release of low energy radioactive aerosol from Tank 241-AY-102 through failed filters due to volcanic ashfall, excessive vacuum resulting in large steam bump and filter blowout.	1. Natural phenomena	Communications during sluicing	Cover blocks in place prior to sluicing Emer Resp Plan/Procedures	11X

Table D-3. Defense-in-Depth Controls for Potential S3 and S2 Consequences. (35 sheets)

ID	Hazardous Conditions	Candidate Causes	DID-Preventive	DID-Mitigative	Rep Acc W320
W320-D-VENT09	Release of low energy radioactive aerosol from largely intact Tank 241-AY-102 due to loss of primary or annulus ventilation which results in steam release.	1. Extended loss of power 2. Severe ventilation casualty	Communications during sluicing	Cover blocks in place prior to sluicing Emer Resp Plan/Procedures	11X
W320-D-VENT19	Release of low energy radioactive aerosol through failed filters due to loss of primary or annulus ventilation for extended period of time resulting in rise in waste temperature and large bump in Tank 241-AY-102.	1. Extended loss of power 2. Severe ventilation casualty	Communications during sluicing	Cover blocks in place prior to sluicing Emer Resp Plan/Procedures	11X
W320-ABCD-TRANS01	Release of liquid waste due to sluicer nozzle jet being directed at and breaching Tank 241-C-106 wall resulting in water leaking into liner gap where steam vapor forms and breaches tank bottom.	1. Unavoidable operator action	Active vent for heat removal Material balance performed every 24 hrs Level mon of Tank 241-C-106 Comm maintained between control trailers Positive mech stops limit nozzle travel	Cover blocks in place Emer Resp Plan/Procedures	12
W320-ABCD-ALL04	Release of liquid waste below grade and aerosol release to atmosphere due to water intrusion into Tank 241-C-106 with water level exceeding maximum operating level resulting in leakeage into liner gap, steam formation, breaching of tank bottom and steam bump.	1. Raw water leak 2. Surface water flood 3. Vent system water inleakage 4. Excessive transfer from Tank 241-AY-102 5. Water intrusion in Tank 241-C-105 that cascades over to Tank 241-C-106	Active vent for heat removal Material balance performed every 24 hrs Level mon of Tank 241-C-106 Comm maintained between control trailers Raw water metered	Cover blocks in place Emer Resp Plan/Procedures	12X
W320-ABCD-ALL05	Release of liquid waste below grade and aerosol release to atmosphere due to water intrusion into Tank 241-C-106 with water level exceeding maximum operating level resulting in leakage into liner gap, steam formation, breaching of tank bottom and steam bump.	1. Raw water leak 2. Surface water flood 3. Vent system water inleakage 4. Excessive transfer from Tank 241-AY-102 5. Water intrusion in Tank 241-C-105 that cascades over to Tank 241-C-106	Active vent for heat removal Material balance performed every 24 hrs Level mon of Tank 241-C-106 Comm maintained between control trailers Raw water metered	Cover blocks in place Emer Resp Plan/Procedures	12X

Table D-3. Defense-in-Depth Controls for Potential S3 and S2 Consequences. (35 sheets)

ID	Hazardous Conditions	Candidate Causes	DID-Preventive	DID-Mitigative	Rep Acc W320
W320-ABCD-TRANS02	Release of liquid waste below grade and aerosol release to atmosphere due to loss of sluicer arm control in Tank 241-C-106 resulting in jet striking tank liner with liner being breached, water leakage into liner gap, steam formation, breaching of tank bottom and steam bump.	1. Unavoidable operator action	Active vent for heat removal Material balance performed every 24 hrs Level mon of Tank 241-C-106 Comm maintained between control trailers	Cover blocks in place Emer Resp Plan/Procedures	12X
W320-ABCD-TRANS03	Release of liquid waste below grade and aerosol release to atmosphere due to siphoning of waste from Tank 241-AY-102 after the stoppage of pumping water exceeds maximum operating level in Tank C-106 resulting in water leakage into liner gap, steam formation, breaching of tank bottom and large steam bump.	1. Buildup of solids in openings 2. Equipment casualty	Active vent for heat removal Material balance performed every 24 hrs Syphon protection Level mon of Tank 241-C-106 Comm maintained between control trailers	Cover blocks in place Emer Resp Plan/Procedures	12X
W320-ABCD-TRANS05	Release of liquid waste below grade and aerosol release to atmosphere due to sluicer hose break in Tank 241-C-106 resulting in jet striking tank liner with liner being breached, water leakage into liner gap, steam formation, and breaching of tank bottom.	1. Primary failure of hose 2. Severe water hammer 3. Fatigue from vibration	Active vent for heat removal Material balance performed every 24 hrs Level mon of Tank 241-C-106 Comm maintained between control trailers Stiff hose engineered to maintain integrity	Cover blocks in place Emer Resp Plan/Procedures	12X
W320-ABCD-TRANS06	Release of liquid waste below grade and aerosol release to atmosphere due to sluicing arm breaking off and penetrating Tank 241-C-106 liner resulting in water leakage into liner gap, steam formation, liner breach and steam bump.	1. Primary failure of sluicer 2. Severe water hammer 3. Severe thermal shock 4. Corrosion 5. Metal fatigue from vibration	Active vent for heat removal Material balance performed every 24 hrs Level mon of Tank 241-C-106 Comm maintained between control trailers Positive mech stops limit nozzle travel	Cover blocks in place Emer Resp Plan/Procedures	12X

Table D-3. Defense-in-Depth Controls for Potential S3 and S2 Consequences. (35 sheets)

ID	Hazardous Conditions	Candidate Causes	DID-Preventive	DID-Mitigative	Rep Acc W320
W320-ABCD-TRANS07	Release of liquid waste below grade and aerosol release to atmosphere due to sluicer flow being excessive in Tank 241-C-106 resulting in jet striking tank liner with liner being breached, water leakage under tank bottom, steam formation, breaching of tank bottom and large steam bump.	1. Sluice flow control fault 2. Operator error	Active vent for heat removal Material balance performed every 24 hrs Level mon of Tank 241-C-106 Comm maintained between control trailers	Cover blocks in place Emer Resp Plan/Procedures	12X
W320-ABCD-TRANS08	Release of liquid waste below grade and aerosol release to atmosphere due to sluicer flow excessive into Tank 241-C-106 with water level exceeding maximum operating level resulting in leakage into liner gap, steam formation, breaching of tank bottom and large steam bump.	1. Sluice flow control fault 2. Operator error	Active vent for heat removal Material balance performed every 24 hrs Level mon of Tank 241-C-106 Comm maintained between control trailers	Cover blocks in place Emer Resp Plan/Procedures	12X
W320-ABCD-TRANS09	Release of liquid waste below grade and aerosol release to atmosphere due to excessive waste temperature change rate Tank 241-C-106 liner breaches, resulting in water leakage under tank bottom, steam formation, breaching of tank bottom and large steam bump.	1. High temperature in Tank 241-AY-102	Active vent for heat removal Material balance performed every 24 hrs Level mon of Tank 241-C-106 Comm maintained between control trailers	Cover blocks in place Emer Resp Plan/Procedures	12X
W320-BCD-ALL07	Release of liquid waste below grade and aerosol release to atmosphere due to water intrusion into Tank 241-C-105 which travels through cascade line into Tank 241-C-106 with water level exceeding maximum operating level resulting in leakage into liner gap, steam formation, bulging of tank bottom, ripping of liner and steam bump.	1. Raw water leak 2. Surface water flood	Active vent for heat removal Material balance performed every 24 hrs Level mon of Tank 241-C-106 Comm maintained between control trailers	Cover blocks in place Emer Resp Plan/Procedures	12X

Table D-3. Defense-in-Depth Controls for Potential S3 and S2 Consequences. (35 sheets)

ID	Hazardous Conditions	Candidate Causes	DID-Preventive	DID-Mitigative	Rep Acc W320
W320-BCD-ALL08	Release of liquid waste below grade and aerosol release to atmosphere due to excessive corrosion because of waste disturbance in Tank 241-C-106 resulting in leakage into liner gap, steam formation, breaching of tank bottom and steam bump.	1. Inadequate prediction of waste behavior	Active vent for heat removal Material balance performed every 24 hrs Level mon of Tank 241-C-106 Comm maintained between control trailers	Cover blocks in place Emer Resp Plan/Procedures	12X
W320-BCD-PUMP08	Release of liquid waste below grade and aerosol release to atmosphere due to submersible pump being raised too high, winch lifting strap breaking, pump falling and penetrating Tank 241-C-106 liner resulting in water leakage into liner gap, steam formation, liner bulges/rips and steam bump occurs.	1. Operator error in positioning direction 2. Inadvertant or accidental actuation 3. Winch controller fault	Active vent for heat removal Material balance performed every 24 hrs Level mon of Tank 241-C-106 Comm maintained between control trailers	Cover blocks in place Emer Resp Plan/Procedures	12X
W320-BCD-TRANS09	Release of liquid waste below grade and aerosol release to atmosphere due to loss of pumping from Tank 241-C-106 and continued pumping of Tank 241-AY-102 water exceeds maximum operating level resulting in water leakage into liner gap, steam formation, breaching of tank bottom and large steam bump.	1. Loss of power 2. Equipment casualty	Active vent for heat removal Material balance performed every 24 hrs Syphon protection Level mon of Tank 241-C-106 Comm maintained between control trailers	Cover blocks in place Emer Resp Plan/Procedures	12X
W320-D-ALL09	Release of liquid waste below grade and aerosol release to atmosphere due to seismic event Tank 241-C-106 liner is breached resulting in water leakage into liner gap, steam formation, breaching of tank bottom and large steam bump.	1. Natural Phenomena	Active vent for heat removal Material balance performed every 24 hrs Level mon of Tank 241-C-106 Comm maintained between control trailers	Cover blocks in place Emer Resp Plan/Procedures	12X

Table D-3. Defense-in-Depth Controls for Potential S3 and S2 Consequences. (35 sheets)

ID	Hazardous Conditions	Candidate Causes	DID-Preventive	DID-Mitigative	Rep Acc W320
W320-D-TRANS09	Release of liquid waste below grade and aerosol release to atmosphere due to movement of debris during sluicing which impacts and breaches the Tank 241-C-106 liner, resulting in water leakage into liner gap, steam formation, breaching of tank bottom and steam bump.	1. Expected outcome of high pressure sluice. Many objects are in the waste.	Active vent for heat removal Material balance performed every 24 hrs Level mon of Tank 241-C-106 Comm maintained between control trailers	Cover blocks in place Emer Resp Plan/Procedures	12X
W320-F-TERM05	Release of liquid waste below grade and aerosol release to atmosphere due to high heat load after completion of sluicing process resulting in the need for water addition to Tank 241-C-106 with a deteriorated tank liner, water leakage into liner gap, steam formation, liner breach and steam bump.	1. Error in calculations	Active vent for heat removal Material balance performed every 24 hrs Level mon of Tank 241-C-106 Comm maintained between control trailers	Cover blocks in place Emer Resp Plan/Procedures	12X
W320-B-ALL11	Release of liquid waste due to large water intrusion into Tank 241-C-106 resulting in high hydrostatic pressure and tank breach.	1. Raw water leak 2. Surface water flood 3. Vent system water inleakage 4. Excessive transfer from Tank 241-AY-102 5. Water intrusion in Tank 241-C-105 that cascades over to Tank 241-C-106	Operator training Operator procedures	Emer Resp Plan/Procedures	13X
W320-B-TRANS22	Release of radioactive liquid from transfer line due to local flooding during transfer which results in line being uncovered and breached.	1. Raw water leak 2. Natural flow	None	Walkdown once/shift WRSS transfer lines equipped with active encasement leak detectors	14
W320-B-FLUSH06	Release of radioactive liquid from transfer line due to a pipe break in Tank 241-AY-102 pit with the high capacity drain cover on resulting in overflow of pit onto the ground.	1. Equipment failure 2. Maintenance or assembly error	Service water freeze protection system Pit drains where open	Tank farms visually surveyed at least once a day	15A

Table D-3. Defense-in-Depth Controls for Potential S3 and S2 Consequences. (35 sheets)

ID	Hazardous Conditions	Candidate Causes	DID-Preventive	DID-Mitigative	Rep Acc W320
W320-BCD-TRANS10	Release of radioactive liquid release from sluice transfer line due to the blank flange being left off flushing connection in Tank 241-AY-102 pit and drain cover left on resulting in overflow of pit onto the ground during sluicing.	1. Maintenance error 2. Communications error between different groups using the pit	Pit drains where open	Tank farms visually surveyed at least once a day Material balance performed every 24 hrs Encasement leak detectors	15B
W320-ABCD-ALL07	Release of radioactive liquid from Tank 241-C-106 onto the ground due to large water intrusion into tank.	1. Raw water leak 2. Surface water flood 3. Vent system water inleakage 4. Excessive transfer from Tank 241-AY-102 5. Water intrusion in Tank 241-C-105 that cascades over to Tank 241-C-106	Service water freeze protection system Pit drains where open	Tank farms visually surveyed at least once a day Material balance performed every 24 hrs	15X
W320-ABCD-ALL08*	Release of radioactive liquid from Tank 241-C-106 due to siphoning of waste from Tank 241-AY-102 into Tank 241-C-106	1. Plugging of antisiphon holes 2. Loss of electrical power to the pumps 3. Shutdown from operations	None	Tank farms visually surveyed at least once a day Material balance performed every 24 hrs	15X
W320-B-ALL13	Release of radioactive liquid from Tank 241-AY-102 due to large water intrusion into tank	1. Raw water leak 2. Surface water flood 3. Vent system water inleakage	Service water freeze protection system	Tank farms visually surveyed at least once a day Material balance performed every 24 hrs	15X
W320-B-FLUSH07	Release of radioactive liquid from transfer line due to pipe break in pit during flushing and drain plug cover on resulting in overflow of pit onto the ground.	1. Equipment failure 2. Maintenance or assembly error	Service water freeze protection system Pit drains where open	Tank farms visually surveyed at least once a day Material balance performed every 24 hrs	15X

Table D-3. Defense-in-Depth Controls for Potential S3 and S2 Consequences. (35 sheets)

ID	Hazardous Conditions	Candidate Causes	DID-Preventive	DID-Mitigative	Rep Acc W320
W320-BCD-TRANS11	Release of energetic radioactive aerosol from transfer line due to blank flange left off flushing connection in Tank 241-C-106 pit after flushing. Cover plug is lifted out of cover block on initiation of sluicing process.	1. Maintenance error 2. Communications error between different groups using the pit	Repositioned jumpers service tested Cameras used to verify initial jumper integrity Isolation valves (manual) for flush system	Process pit and vault pit leak detectors Material balance every 24 hrs	16A
W320-BCD-TRANS12	Release of energetic radioactive aerosol from transfer line due to blank flange left off flushing connection in Tank 241-AY-102 pit after flushing. Cover plug is lifted out of cover block on initiation of sluicing process.	1. Maintenance error 2. Communications error between different groups using the pit	Repositioned jumpers service tested Cameras used to verify initial jumper integrity Isolation valves (manual) for flush system	Process pit and vault pit leak detectors Material balance every 24 hrs	16B
W320-ABCD-TRANS11*	Release of energetic radioactive aerosol from transfer line in pit due to flammable gas collecting in pit and being ignited. Cover block lifted and falls onto piping in pit resulting in spray release.	1. Chimney through deep drop legs 2. 6 in. high capacity drain to dome space 3. Pit sealed to minimize inleakage	None	None	16X
W320-ABCD-TRANS12	Release of energetic radioactive aerosol from line break due to pipe or jumper breach in distributor pit of Tank 241-AY-102 with cover block off during slurry transfer.	1. Pipe failure 2. Improper Assembly 3. Other operators change jumper hookup 4. Connector faults	Repositioned jumpers service tested Cameras used to verify initial jumper integrity	Process pit and vault pit leak detectors Material balance every 24 hrs	16X
W320-B-TRANS23	Release of energetic radioactive aerosol from line break due to pipe or jumper breach in pump pit of Tank 241-AY-102 with cover block off during sluicing.	1. Pipe failure 2. Improper Assembly 3. Other operators change jumper hookup 4. Connector faults	Repositioned jumpers service tested Cameras used to verify initial jumper integrity	Process pit and vault pit leak detectors Material balance every 24 hrs	16X

Table D-3. Defense-in-Depth Controls for Potential S3 and S2 Consequences. (35 sheets)

ID	Hazardous Conditions	Candidate Causes	DID-Preventive	DID-Mitigative	Rep Acc W320
W320-B-TRANS24	Release of energetic radioactive aerosol from line break due to pipe or jumper breach in pump pit of Tank 241-C-106 with cover block off.	1. Pipe failure 2. Improper Assembly 3. Other operators change jumper hookup 4. Connector faults	Repositioned jumpers service tested Cameras used to verify initial jumper integrity	Process pit and vault pit leak detectors Material balance every 24 hrs	16X
W320-B-TRANS25	Release of energetic radioactive aerosol from line break due to pipe or jumper breach in sluice pit of Tank 241-C-106 with cover block off.	1. Pipe failure 2. Improper Assembly 3. Other operators change jumper hookup 4. Connector faults	Repositioned jumpers service tested Cameras used to verify initial jumper integrity	Process pit and vault pit leak detectors Material balance every 24 hrs	16X
W320-B-TRANS26	Release of energetic radioactive aerosol from transfer line in Tank 241-C-106 pit due to flammable gas collecting in pit and being ignited. Cover block lifted and falls onto piping in pit resulting in spray release.	1. Chimney through deep drop legs 2. 6 in. high capacity drain to dome space 3. Pit sealed to minimize inleakage	Repositioned jumpers service tested Cameras used to verify initial jumper integrity	Process pit and vault pit leak detectors Material balance every 24 hrs	16X
W320-B-TRANS27	Release of energetic radioactive aerosol from transfer line in pit due to flammable gas collecting in pit and being ignited. Cover block lifted and falls onto piping in pit resulting in spray release.	1. Chimney through deep drop legs 2. 6 in. high capacity drain to dome space 3. Pit sealed to minimize inleakage	None	Process pit and vault pit leak detectors Material balance every 24 hrs	16X
W320-B-TRANS28	Release of radioactive aerosol from covered pit due to jumper or pipe breach in Tank 241-AY-102 distributor pit resulting in spray release from pit.	1. Pipe failure 2. Improper Assembly 3. Other operators change jumper hookup 4. Connector faults	Repositioned jumpers service tested Cameras used to verify initial jumper integrity	Process pit and vault pit leak detectors Material balance every 24 hrs	16X
W320-B-TRANS29	Release of radioactive aerosol from covered pit due to jumper or pipe breach in Tank 241-AY-102 pump pit resulting in spray release from pit.	1. Pipe failure 2. Improper Assembly 3. Other operators change jumper hookup 4. Connector faults	Repositioned jumpers service tested Cameras used to verify initial jumper integrity	Process pit and vault pit leak detectors Material balance every 24 hrs	16X

Table D-3. Defense-in-Depth Controls for Potential S3 and S2 Consequences. (35 sheets)

ID	Hazardous Conditions	Candidate Causes	DID-Preventive	DID-Mitigative	Rep Acc W320
W320-B-TRANS30	Release of radioactive aerosol from covered pit due to jumper or pipe breach in Tank 241-C-106 pump pit resulting in spray release from pit.	1. Pipe failure 2. Improper Assembly 3. Other operators change jumper hookup 4. Connector faults	Repositioned jumpers service tested Cameras used to verify initial jumper integrity	Process pit and vault pit leak detectors Material balance every 24 hrs	16X
W320-B-TRANS31	Release of radioactive aerosol from covered pit due to jumper or pipe breach in Tank 241-C-106 sluice pit resulting in spray release from pit.	1. Pipe failure 2. Improper Assembly 3. Other operators change jumper hookup 4. Connector faults	Repositioned jumpers service tested Cameras used to verify initial jumper integrity	Process pit and vault pit leak detectors Material balance every 24 hrs	16X
W320-BCD-FLUSH01	Release of energetic radioactive aerosol from transfer line due to 3 way valve left in flush position after flushing. Cover plug is lifted out of cover block on initiation of sluicing process.	1. Maintenance error 2. Communications error between different groups using the pit	Repositioned jumpers service tested Cameras used to verify initial jumper integrity Isolation valves (manual) for flush system Backflow preventers	Process pit and vault pit leak detectors Material balance every 24 hrs	16X
W320-BCD-FLUSH02*	Release of energetic radioactive aerosol from flush tank of transfer truck due to start of submersible pump in Tank 241-C-106 during the flush of slurry transfer line. Flush tank is filled and pressurized resulting in rupture of tank or transfer line.	1. Human error 2. Communications error between different groups	Isolation valves (manual) for flush system	Backflow preventers	16X
W320-BCD-TRANS13	Release of energetic radioactive aerosol from transfer line due to blank flange left off flushing connection and 3 way valve left in flush position after flushing. Cover plug remains in place on initiation of sluicing process. High capacity drain cover left on and pit overflows.	1. Maintenance error 2. Communications error between different groups using the pit	Repositioned jumpers service tested Cameras used to verify initial jumper integrity Isolation valves (manual) for flush system	Process pit and vault pit leak detectors Material balance every 24 hrs	16X

Table D-3. Defense-in-Depth Controls for Potential S3 and S2 Consequences. (35 sheets)

ID	Hazardous Conditions	Candidate Causes	DID-Preventive	DID-Mitigative	Rep Acc W320
W320-D-PUMP01	Release of energetic radioactive aerosol from line break in Tank 241-AY-102 transfer pit due to immersible pump being positioned too high resulting in air entrainment in transfer line. Booster pump torques in reaction to air in transfer line and jumper connectors break. Cover block is off.	1. Operator error in positioning 2. Inadvertant or accidental repositioning 3. Level indication fault 4. Waste level indicator on pump fault	None	Process pit and vault pit leak detectors Material balance every 24 hrs	16X
W320-D-PUMP03	Release of energetic radioactive aerosol from line break in Tank 241-C-106 transfer pit due to immersible pump being positioned too high resulting in air entrainment in transfer line. Booster pump torques in reaction to air in transfer line and jumper connectors break. Cover block is off.	1. Operator error in positioning 2. Inadvertant or accidental repositioning 3. Level indication fault 4. Waste level indicator on pump fault	None	Process pit and vault pit leak detectors Material balance every 24 hrs	16X
W320-D-TRANS10	Release of energetic radioactive aerosol from jumper in pit due to seismic event. Cover block breached by ground motion resulting in spray release.	1. Natural Phenomena	Repositioned jumpers service tested Cameras used to verify initial jumper integrity	Process pit and vault pit leak detectors Material balance every 24 hrs	16X
W320-D-TRANS11	Release of large high energy aerosolized radioactive waste to the atmosphere from a spray leak from transfer line due to seismic event.	1. Natural Phenomena	None	Access cntrl Material balance every 24 hrs	17
W320-B-TRANS32	Release of large high energy aerosolized radioactive waste from a spray leak from transfer line break due to aircraft strike on underground transfer line berm.	1. Light aircraft crash	None	Access cntrl Material balance every 24 hrs	17X

Table D-3. Defense-in-Depth Controls for Potential S3 and S2 Consequences. (35 sheets)

ID	Hazardous Conditions	Candidate Causes	DID-Preventive	DID-Mitigative	Rep Acc W320
W320-D-ALL06	Release of a small amount of low energy aerosolized waste through failed filters due to seismic event which induces a steam bump in Tank 241-AY-102, and failure of filters or ducting.	1. Natural Phenomena	None	Seismic shutdown switch	18A
W320-ALL-TRANS02	Release of small high energy aerosolized waste due to high winds or tornado resulting in failed ventilation ducting and unfiltered release.	1. Natural occurrence under proper conditions	HEPA filter Delta P alarm - where provided	HEPA filter Delta P - low Delta P interlock HEPA filter replacement	18F
W320-B-ALL14	Release of small low energy aerosolized waste to the atmosphere from intact pit due to high winds/dust devils during plug removal from pit cover.	1. High winds	None	None	18F

ALC = air lift circulator
GRE = gas release event
HASP = Tank Farms Health and Safety Plan
HEPA = high efficiency particulate air (filter)
IOSR = Interim operational safety requirements
JCS = Job Control system
WRSS = waste retrieval sluicing system

This page intentionally left blank.

Table D-4. Defense-in-Depth Controls for Potentially Severe (E3 and E2) Environmental Consequences. (16 sheets)

ID	Hazardous Conditions	Candidate Causes	DID-Preventive	DID-Mitigative
ANALYZED ACCIDENT: 5 - Caustic Spray Leak	This accident is analyzed and the results presented in the current BIO. An additional control has been included for Sodium Hydroxide cargo tanks to meet applicable DOT specifications.		Oper training TWRS Haz Material Prot Prog	Emerg resp plans and proc
W320-A-TRANS04	Release of large high energy aerosolized waste from Tank 241-C-106 due to high waste temperature during slurry transfer which results in a steam bump. Bump induces flammable gas release which is ignited resulting in a dome burn.	1. Flowmeters fault or out of calibration 2. Operator error in positioning Tank 241-C-106 pump 3. Inadvertant or accidental actuation of Tank 241-C-106 pump but not Tank 241-AY-102 pump 4. ENRAF level indication fault 5. Pump controller fault 6. Tank 241-C-106 T/C fault	Mon dome pressure in Tank 241-C-106 Mon vent flow rate in tanks	None
W320-A-TRANS05	Release of energetic radioactive aerosol to atmosphere due to temperature out of specification resulting in steam bump when Tank 241-C-106 level is lowered which induces a release of a flammable gas plume and then is ignited.	1. Operator mistake 2. Temperature measurement fault	Mon dome pressure in Tank 241-C-106 Meas background conc for 3-4 weeks prior to sluicing Mon vent flow rate in tanks	None
W320-A-TRANS06	Release of energetic radioactive aerosol from damaged tank due to waste temperature being out of specification during start of slurry transfer in Tank 241-C-106 and subsequent ignition of organics.	1. Operator mistake 2. Temperature measurement fault	Vehicle position spotters Tank farm fences	HEPA filter replacement
W320-ABCD-ALL01	Release of energetic radioactive aerosol from damaged tank due to flooding on top of Tank 241-C-106 dome	1. Raw water line rupture 2. Heavy rainfall	HASP procedure JCS procedure Oper training Oper procedures	Rad Prot Prog Emer Resp Plan/Procedures
W320-ABCD-ALL02	Release of energetic radioactive aerosol from damaged tank due to flooding on top of Tank 241-AY-102 dome	1. Raw water line rupture 2. Heavy rainfall	HASP procedure JCS procedure Oper training Oper procedures	Rad Prot Prog Emer Resp Plan/Procedures

Table D-4. Defense-in-Depth Controls for Potentially Severe (E3 and E2) Environmental Consequences. (16 sheets)

ID	Hazardous Conditions	Candidate Causes	DID-Preventive	DID-Mitigative
W320-ABCD-ALL03	Release of energetic radioactive aerosol from tank dome collapse due to flooding on top of tank dome	1. Raw water line rupture 2. Heavy rainfall	HASP procedure JCS procedure Oper training Oper procedures	Rad Prot Prog Emer Resp Plan/Procedures
W320-ABCD-ALL04	Release of liquid waste below grade and aerosol release to atmosphere due to water intrusion into Tank 241-C-106 with water level exceeding maximum operating level resulting in leakeage into liner gap, steam formation, breaching of tank bottom and steam bump.	1. Raw water leak 2. Surface water flood 3. Vent system water inleakage 4. Excessive transfer from Tank 241-AY-102 5. Water intrusion in Tank 241-C-105 that cascades over to Tank 241-C-106	Active vent for heat removal Material balance performed every 24 hrs Level mon of Tank 241-C-106 Comm maintained between control trailers Raw water metered	Cover blocks in place Emer Resp Plan/Procedures
W320-ABCD-ALL05	Release of liquid waste below grade and aerosol release to atmosphere due to water intrusion into Tank 241-C-106 with water level exceeding maximum operating level resulting in leakage into liner gap, steam formation, breaching of tank bottom and steam bump.	1. Raw water leak 2. Surface water flood 3. Vent system water inleakage 4. Excessive transfer from Tank 241-AY-102 5. Water intrusion in Tank 241-C-105 that cascades over to Tank 241-C-106	Active vent for heat removal Material balance performed every 24 hrs Level mon of Tank 241-C-106 Comm maintained between control trailers Raw water metered	Cover blocks in place Emer Resp Plan/Procedures
W320-ABCD-ALL07	Release of radioactive liquid from Tank 241-C-106 onto the ground due to large water intrusion into tank.	1. Raw water leak 2. Surface water flood 3. Vent system water inleakage 4. Excessive transfer from Tank 241-AY-102 5. Water intrusion in Tank 241-C-105 that cascades over to Tank 241-C-106	Service water freeze protection system Pit drains where open	Tank farms visually surveyed at least once a day Material balance performed every 24 hrs
W320-ABCD-ALL08*	Release of radioactive liquid from Tank 241-C-106 due to siphoning of waste from Tank 241-AY-102 into Tank 241-C-106	1. Plugging of antisiphon holes 2. Loss of electrical power to the pumps 3. Shutdown from operations	None	Tank farms visually surveyed at least once a day Material balance performed every 24 hrs
W320-ABCD-CHILL02	Release of energetic radioactive aerosol from covered pit or deadend pipe due to propylene glycol spray leak into ventilation system of Tank 241-C-106 with ignition propagating into tank dome.	1. Piping or tubing leak	Fire prot prog Rad prot prog Vehicle position spotters Tank farm fences Vegetation cntrl prog	Contam cntrl prog

Table D-4. Defense-in-Depth Controls for Potentially Severe (E3 and E2) Environmental Consequences. (16 sheets)

ID	Hazardous Conditions	Candidate Causes	DID-Preventive	DID-Mitigative
W320-ABCD-CHILL03	Release of energetic radioactive aerosol from collapsed Tank 241-C-106 due to excessive cooling from process chiller which restricts inflow and loop seal fails to operate.	1. Chiller control fault 2. High humidity	None	None
W320-ABCD-TRANS01	Release of liquid waste due to sluicer nozzle jet being directed at and breaching Tank 241-C-106 wall resulting in water leaking into liner gap where steam vapor forms and breaches tank bottom.	1. Unavoidable operator action	Active vent for heat removal Material balance performed every 24 hrs Level mon of Tank 241-C-106 Comm maintained between control trailers Positive mech stops limit nozzle travel	Cover blocks in place Emer Resp Plan/Procedures
W320-ABCD-TRANS02	Release of liquid waste below grade and aerosol release to atmosphere due to loss of sluicer arm control in Tank 241-C-106 resulting in jet striking tank liner with liner being breached, water leakage into liner gap, steam formation, breaching of tank bottom and steam bump.	1. Unavoidable operator action	Active vent for heat removal Material balance performed every 24 hrs Level mon of Tank 241-C-106 Comm maintained between control trailers	Cover blocks in place Emer Resp Plan/Procedures
W320-ABCD-TRANS03	Release of liquid waste below grade and aerosol release to atmosphere due to siphoning of waste from Tank 241-AY-102 after the stoppage of pumping water exceeds maximum operating level in Tank 241-C-106 resulting in water leakage into liner gap, steam formation, breaching of tank bottom and large steam bump.	1. Buildup of solids in openings 2. Equipment casualty	Active vent for heat removal Material balance performed every 24 hrs Syphon protection Level mon of Tank 241-C-106 Comm maintained between control trailers	Cover blocks in place Emer Resp Plan/Procedures
W320-ABCD-TRANS05	Release of liquid waste below grade and aerosol release to atmosphere due to sluicer hose break in Tank 241-C-106 resulting in jet striking tank liner with liner being breached, water leakage into liner gap, steam formation, and breaching of tank bottom.	1. Primary failure of Hose 2. Severe Water hammer 3. Fatigue from vibration	Active vent for heat removal Material balance performed every 24 hrs Level mon of Tank 241-C-106 Comm maintained between control trailers Stiff hose engineered to maintain integrity	Cover blocks in place Emer Resp Plan/Procedures

Table D-4. Defense-in-Depth Controls for Potentially Severe (E3 and E2) Environmental Consequences. (16 sheets)

ID	Hazardous Conditions	Candidate Causes	DID-Preventive	DID-Mitigative
W320-ABCD-TRANS06	Release of liquid waste below grade and aerosol release to atmosphere due to sluicing arm breaking off and penetrating Tank 241-C-106 liner resulting in water leakage into liner gap, steam formation, liner breach and steam bump.	1. Primary failure of sluicer 2. Severe Water hammer 3. Severe thermal shock 4. Corrosion 5. Metal fatigue from vibration	Active vent for heat removal Material balance performed every 24 hrs Level mon of Tank 241-C-106 Comm maintained between control trailers Positive mech stops limit nozzle travel	Cover blocks in place Emer Resp Plan/Procedures
W320-ABCD-TRANS07	Release of liquid waste below grade and aerosol release to atmosphere due to sluicer flow being excessive in Tank 241-C-106 resulting in jet striking tank liner with liner being breached, water leakage under tank bottom, steam formation, breaching of tank bottom and large steam bump.	1. Sluice flow control fault 2. Operator error	Active vent for heat removal Material balance performed every 24 hrs Level mon of Tank 241-C-106 Comm maintained between control trailers	Cover blocks in place Emer Resp Plan/Procedures
W320-ABCD-TRANS08	Release of liquid waste below grade and aerosol release to atmosphere due to sluicer flow excessive into Tank 241-C-106 with water level exceeding maximum operating level resulting in leakage into liner gap, steam formation, breaching of tank bottom and large steam bump.	1. Sluice flow control fault 2. Operator error	Active vent for heat removal Material balance performed every 24 hrs Level mon of Tank 241-C-106 Comm maintained between control trailers	Cover blocks in place Emer Resp Plan/Procedures
W320-ABCD-TRANS09	Release of liquid waste below grade and aerosol release to atmosphere due to excessive waste temperature change rate Tank 241-C-106 liner breaches, resulting in water leakage under tank bottom, steam formation, breaching of tank bottom and large steam bump.	1. High temperature in Tank 241-AY-102	Active vent for heat removal Material balance performed every 24 hrs Level mon of Tank 241-C-106 Comm maintained between control trailers	Cover blocks in place Emer Resp Plan/Procedures
W320-ABCD-TRANS11	Release of energetic radioactive aerosol from transfer line in pit due to flammable gas collecting in pit and being ignited. Cover block lifted and falls onto piping in pit resulting in spray release.	1. Chimney through deep drop legs 2. 6 in. high capacity drain to dome space 3. Pit sealed to minimize inleakage	Fire prot prog Rad prot prog	Contam cntrl prog

Table D-4. Defense-in-Depth Controls for Potentially Severe (E3 and E2) Environmental Consequences. (16 sheets)

ID	Hazardous Conditions	Candidate Causes	DID-Preventive	DID-Mitigative
W320-ABCD-TRANS11*	Release of energetic radioactive aerosol from transfer line in pit due to flammable gas collecting in pit and being ignited. Cover block lifted and falls onto piping in pit resulting in spray release.	1. Chimney through deep drop legs 2. 6 in. high capacity drain to dome space 3. Pit sealed to minimize inleakage	None	None
W320-ABCD-TRANS12	Release of energetic radioactive aerosol from line break due to pipe or jumper breach in distributor pit of Tank 241-AY-102 with cover block off during slurry transfer.	1. Pipe failure 2. Improper Assembly 3. Other operators change jumper hookup 4. Connector faults	Repositioned jumpers service tested Cameras used to verify initial jumper integrity	Process pit and vault pit leak detectors Material balance every 24 hrs
W320-ABCDF-ALL01*	Release of energetic radioactive aerosol to atmosphere due to buildup of flammable gas in Tank 241-AY-102 pit drain pipe which is then ignited.	1. Flammable gas generation from tank waste	Mon dome pressure in Tank 241-AY-102 Mon vent flow rate in tanks	None
W320-ALL-VENT01	Release of energetic radioactive aerosol from breached ventilation duct for Tank 241-AY-102 due to a buildup of ammonium nitrate in ventilation ducting and ignition via hot work, range fire etc.	1. Natural occurrence under proper conditions	None	HEPA filter replacement
W320-B-ALL01	Release of a large amount of high energy aerosolized waste from Tank 241-C-106 dome collapse due to volcanic ashfall.	1. Natural phenomena	HASP procedure JCS procedure Oper training Oper procedures	Rad Prot Prog Emer Resp Plan/Procedures
W320-B-ALL02	Release of a large amount of high energy aerosolized waste from Tank 241-AY-102 dome collapse due to volcanic ashfall.	1. Natural phenomena	HASP procedure JCS procedure Oper training Oper procedures	Rad Prot Prog Emer Resp Plan/Procedures
W320-B-ALL03	Release of high energy aerosolized waste to the atmosphere from Tank 241-C-106 dome collapse due to extreme snow fall.	1. Natural phenomena	HASP procedure JCS procedure Oper training Oper procedures	Rad Prot Prog Emer Resp Plan/Procedures

Table D-4. Defense-in-Depth Controls for Potentially Severe (E3 and E2) Environmental Consequences. (16 sheets)

ID	Hazardous Conditions	Candidate Causes	DID-Preventive	DID-Mitigative
W320-B-ALL04	Release of large amount of high energy aerosolized waste from Tank 241-AY-102 dome collapse due to extreme snow fall.	1. Natural phenomena	HASP procedure JCS procedure Oper training Oper procedures	Rad Prot Prog Emer Resp Plan/Procedures
W320-B-ALL05	Release of energetic radioactive aerosol from Tank 241-C-106 dome collapse due to dome being overloaded.	1. Maintenance error 2. Procedure violation	Shutdown oper during high wind HASP procedure JCS procedure Oper training Oper procedures	Load absorber around riser Rad Prot Prog Emer Resp Plan/Procedures
W320-B-ALL06	Release of energetic radioactive aerosol from Tank 241-AY-102 dome collapse due to dome being overloaded.	1. Maintenance error 2. Procedure violation	HASP procedure JCS procedure Oper training Oper procedures	Load absorber around riser Rad Prot Prog Emer Resp Plan/Procedures
W320-B-ALL08	Large high energy radioactive aerosolized waste release from Tank 241-AY-102 due to a large water intrusion which induces a flammable gas release event. It is then ignited resulting in a dome space fire.	1. Raw water leak 2. Surface water flood	Mon dome pressure in Tank 241-AY-102 Video mon of waste in Tank 241-AY-102 Mon vent flow rate in tanks Mon level growth	None
W320-B-ALL09	Release of energetic radioactive aerosol from damaged tank due to formation of organic layer in Tank 241-AY-102 during slurry distribution and subsequent ignition of organics.	1. Sluicing causes organic separation	Vehicle position spotters Tank farm fences	HEPA filter replacement
W320-B-ALL10	Release of energetic radioactive aerosol from damaged tank due to formation of organic layer in Tank 241-C-106 during sluicing and subsequent ignition of organics.	1. Sluicing causes organic separation	Vehicle position spotters Tank farm fences	HEPA filter replacement
W320-B-FLUSH01	Release of energetic radioactive aerosol from damaged Tank 241-C-106 single shell tank due to ignition of flammable gas plume and resulting filter breach induced by large water intrusion into tank.	1. Maintenance error 2. Communications error between different groups using the pit	HEPA filter Delta P alarm - where provided HEPA filter testing	HEPA Filter Delta P - low Delta P interlock HEPA Filter replacement Sampler recorder

Table D-4. Defense-in-Depth Controls for Potentially Severe (E3 and E2) Environmental Consequences. (16 sheets)

ID	Hazardous Conditions	Candidate Causes	DID-Preventive	DID-Mitigative
W320-B-FLUSH04	Release of low energy radioactive aerosol from breached Tank 241-C-106 due to flushing water spray through sluice nozzle resulting in excessive tank vacuum.	1. Planned	None	None
W320-B-TRANS14	Large high energy radioactive aerosolized waste release from Tank 241-AY-102 to the atmosphere due to low slurry flow to distributor which results in solids piling up. Pile generates significant amount of flammable gas and LFL is reached in dome space. It is then ignited resulting in a dome space fire.	1. 3-way ball valve in flushing system not fully open 2. Pump controller fault	Mon dome pressure in Tank 241-AY-102 Video mon of waste in Tank 241-AY-102 Meas background concentrations for 3-4 weeks prior to sluicing Mon vent flow rate in tanks	None
W320-B-TRANS15	Large high energy aerosolized waste release from Tank 241-AY-102 to the atmosphere due to air injected into the waste from the startup of slurry flow from the distributor. Gas is scrubbed from the waste and LFL is reached in dome space. It is then ignited resulting in a dome space fire.	1. Normal procedure	Mon dome pressure in Tank 241-AY-102 Video mon of waste in Tank 241-AY-102 Meas background concentrations for 3-4 weeks prior to sluicing Mon vent flow rate in tanks	None
W320-B-TRANS16	Large high energy radioactive aerosolized waste release from Tank 241-AY-102 to the atmosphere due to distributor nozzle breaking off which results in solids piling up. Pile generates significant amount of flammable gas and LFL is reached in dome space. It is then ignited resulting in a dome space fire.	1. Primary failure of distributor 2. Severe water hammer 3. Severe thermal shock 4. Corrosion 5. Metal fatigue from vibration	Mon dome pressure in Tank 241-AY-102 Video mon of waste in Tank 241-AY-102 Meas background concentrations for 3-4 weeks prior to sluicing Mon vent flow rate in tanks Mon level growth	None
W320-B-TRANS17	Release of high energy aerosolized waste from damaged Tank 241-C-106 due to the sluicer hose breaking which then impinges into the solids releasing a region of retained flammable gas. The gas is then ignited and a plume fire results.	1. Primary failure of Hose 2. Severe Water hammer 3. Severe thermal shock 4. Corrosion 5. Fatigue from vibration	Mon dome pressure in Tank 241-C-106 Mon vent flow rate in tanks	None

Table D-4. Defense-in-Depth Controls for Potentially Severe (E3 and E2) Environmental Consequences. (16 sheets)

ID	Hazardous Conditions	Candidate Causes	DID-Preventive	DID-Mitigative
W320-B-TRANS18	Release of large high energy aerosolized waste to the atmosphere due to sluice water transfer rate being excessive resulting in the Tank 241-C-106 waste level being lowered quickly with the waste temperature too high. This results in a large steam bump and flammable gas release with a plume burn.	1. Flowmeters fault or out of calibration 2. Operator error in positioning Tank 241-C-106 pump 3. Inadvertant or accidental actuation of Tank 241-C-106 pump but not Tank 241-AY-102 pump 4. ENRAF level indication fault 5. Pump controller fault 6. Tank 241-C-106 T/C fault	Mon dome pressure in Tank 241-C-106 Meas background concentrations for 3-4 weeks prior to sluicing Mon vent flow rate in tanks	None
W320-B-TRANS23	Release of energetic radioactive aerosol from line break due to pipe or jumper breach in pump pit of Tank 241-AY-102 with cover block off during sluicing.	1. Pipe failure 2. Improper Assembly 3. Other operators change jumper hookup 4. Connector faults	Repositioned jumpers service tested Cameras used to verify initial jumper integrity	Process pit and vault pit leak detectors Material balance every 24 hrs
W320-B-TRANS24	Release of energetic radioactive aerosol from line break due to pipe or jumper breach in pump pit of Tank 241-C-106 with cover block off.	1. Pipe failure 2. Improper Assembly 3. Other operators change jumper hookup 4. Connector faults	Repositioned jumpers service tested Cameras used to verify initial jumper integrity	Process pit and vault pit leak detectors Material balance every 24 hrs
W320-B-TRANS25	Release of energetic radioactive aerosol from line break due to pipe or jumper breach in sluice pit of Tank 241-C-106 with cover block off.	1. Pipe failure 2. Improper Assembly 3. Other operators change jumper hookup 4. Connector faults	Repositioned jumpers service tested Cameras used to verify initial jumper integrity	Process pit and vault pit leak detectors Material balance every 24 hrs
W320-B-TRANS26	Release of energetic radioactive aerosol from transfer line in Tank 241-C-106 pit due to flammable gas collecting in pit and being ignited. Cover block lifted and falls onto piping in pit resulting in spray release.	1. Chimney through deep drop legs 2. 6 in. high capacity drain to dome space 3. Pit sealed to minimize inleakage	Repositioned jumpers service tested Cameras used to verify initial jumper integrity	Process pit and vault pit leak detectors Material balance every 24 hrs
W320-B-TRANS27	Release of energetic radioactive aerosol from transfer line in pit due to flammable gas collecting in pit and being ignited. Cover block lifted and falls onto piping in pit resulting in spray release.	1. Chimney through deep drop legs 2. 6 in. high capacity drain to dome space 3. Pit sealed to minimize inleakage	None	Process pit and vault pit leak detectors Material balance every 24 hrs

Table D-4. Defense-in-Depth Controls for Potentially Severe (E3 and E2) Environmental Consequences. (16 sheets)

ID	Hazardous Conditions	Candidate Causes	DID-Preventive	DID-Mitigative
W320-B-TRANS32	Release of large high energy aerosolized radioactive waste from a spray leak from transfer line break due to aircraft strike on underground transfer line berm.	1. Light aircraft crash	None	Access cntrl Material balance every 24 hrs
W320-B-VENT08	Release of energetic radioactive aerosol from damaged tank due to loss of Tank 241-C-106 ventilation for many months, dry out of waste and subsequent ignition of organics.	1. Loss of power 2. Equipment casualty	Vehicle position spotters Tank farm fences	HEPA filter replacement
W320-B-VENT09*	Release of energetic radioactive aerosol from damaged tank due to loss of Tank 241-AY-102 ventilation for many months, dry out of waste and subsequent ignition of organics.	1. Loss of power 2. Equipment casualty	Vehicle position spotters Tank farm fences	HEPA filter replacement
W320-BCD-ALL02	Release of energetic radioactive aerosol from collapsed Tank 241-AY-102 due to excessive vacuum resulting from W030 ventilation system inlet damper closing and failure of PCV fails to relieve vacuum.	1. Rotameter valve to controller fault 2. Operator error in adjusting rotameter or inadvertant adjustment	None	None
W320-BCD-ALL03	Release of energetic radioactive aerosol from damaged Tank 241-C-106 due to excessive vacuum resulting from ventilation system fan overspeed and failure of tank loop seal failure.	1. Rotameter valve to controller fault 2. Operator error in adjusting rotameter or inadvertant adjustment	None	None
W320-BCD-ALL07	Release of liquid waste below grade and aerosol release to atmosphere due to water intrusion into Tank 241-C-105 which travels through cascade line into Tank 241-C-106 with water level exceeding maximum operating level resulting in leakage into liner gap, steam formation, bulging of tank bottom, ripping of liner and steam bump.	1. Raw water leak 2. Surface water flood	Active vent for heat removal Material balance performed every 24 hrs Level mon of Tank 241-C-106 Comm maintained between control trailers	Cover blocks in place Emer Resp Plan/Procedures

Table D-4. Defense-in-Depth Controls for Potentially Severe (E3 and E2) Environmental Consequences. (16 sheets)

ID	Hazardous Conditions	Candidate Causes	DID-Preventive	DID-Mitigative
W320-BCD-ALL08	Release of liquid waste below grade and aerosol release to atmosphere due to excessive corrosion because of waste disturbance in Tank 241-C-106 resulting in leakage into liner gap, steam formation, breaching of tank bottom and steam bump.	1. Inadequate prediction of waste behavior	Active vent for heat removal Material balance performed every 24 hrs Level mon of Tank 241-C-106 Comm maintained between control trailers	Cover blocks in place Emer Resp Plan/Procedures
W320-BCD-FLUSH01	Release of energetic radioactive aerosol from transfer line due to 3-way valve left in flush position after flushing. Cover plug is lifted out of cover block on initiation of sluicing process.	1. Maintenance error 2. Communications error between different groups using the pit	Repositioned jumpers service tested Cameras used to verify initial jumper integrity Isolation valves (manual) for flush system Backflow preventers	Process pit and vault pit leak detectors Material balance every 24 hrs
W320-BCD-FLUSH02*	Release of energetic radioactive aerosol from flush tank of transfer truck due to start of submersible pump in Tank 241-C-106 during the flush of slurry transfer line. Flush tank is filled and pressurized resulting in rupture of tank or transfer line.	1. Human error 2. Communications error between different groups	Isolation valves (manual) for flush system	Backflow preventers
W320-BCD-PUMP03	Release of small high energy aerosol to atmosphere due to immersible pump being raised too high in Tank 241-AY-102, winch lifting strap breaking, pump falling into waste results in a flammable gas release which is ignited by broken electrical cables, plume burn.	1. Operator error in positioning direction 2. Inadvertant or accidental actuation 3. Winch controller fault	Mon dome pressure in Tank 241-AY-102 Video mon of waste in Tank 241-AY-102 Mon vent flow rate in tanks	None
W320-BCD-PUMP04	Release of energetic radioactive aerosol to atmosphere due to submersible pump being raised too high in Tank 241-AY-102, winch lifting strap breaking, pump falling into waste resulting in a flammable gas release which is ignited by broken electrical cables.	1. Operator error in positioning direction 2. Inadvertant or accidental actuation 3. Winch controller fault	Mon dome pressure in Tank 241-AY-102 Mon vent flow rate in tanks	None

Table D-4. Defense-in-Depth Controls for Potentially Severe (E3 and E2) Environmental Consequences. (16 sheets)

ID	Hazardous Conditions	Candidate Causes	DID-Preventive	DID-Mitigative
W320-BCD-PUMP05	Release of small high energy aerosol to atmosphere due to immersible pump being raised too high in Tank 241-C-106, motor breaks gear assembly, pump freespools into waste resulting in a flammable gas release which is ignited by broken electrical cables, plume burn.	1. Operator error in positioning direction 2. Inadvertant or accidental actuation 3. Winch controller fault	Mon dome pressure in Tank 241-C-106 Mon vent flow rate in tanks	None
W320-BCD-PUMP08	Release of liquid waste below grade and aerosol release to atmosphere due to submersible pump being raised too high, winch lifting strap breaking, pump falling and penetrating Tank 241-C-106 liner resulting in water leakage into liner gap, steam formation, liner bulges/rips and steam bump occurs.	1. Operator error in positioning direction 2. Inadvertant or accidental actuation 3. Winch controller fault	Active vent for heat removal Material balance performed every 24 hrs Level mon of Tank 241-C-106 Comm maintained between control trailers	Cover blocks in place Emer Resp Plan/Procedures
W320-BCD-PUMP09	Release of large high energy aerosolized waste to atmosphere due to immersible pump being raised too high in Tank 241-C-106, winch lifting strap breaking, pump falling into waste results in a flammable gas release which is ignited by broken electrical cables, plume burn.	1. Operator error in positioning direction 2. Inadvertant or accidental actuation 3. Winch controller fault	Mon dome pressure in Tank 241-C-106 Mon vent flow rate in tanks	None
W320-BCD-TRANS09	Release of liquid waste below grade and aerosol release to atmosphere due to loss of pumping from Tank 241-C-106 and continued pumping of Tank 241-AY-102 water exceeds maximum operating level resulting in water leakage into liner gap, steam formation, breaching of tank bottom and large steam bump.	1. Loss of power 2. Equipment casualty	Active vent for heat removal Material balance performed every 24 hrs Syphon protection Level mon of Tank 241-C-106 Comm maintained between control trailers	Cover blocks in place Emer Resp Plan/Procedures

Table D-4. Defense-in-Depth Controls for Potentially Severe (E3 and E2) Environmental Consequences. (16 sheets)

ID	Hazardous Conditions	Candidate Causes	DID-Preventive	DID-Mitigative
W320-BCD-TRANS11	Release of energetic radioactive aerosol from transfer line due to blank flange left off flushing connection in Tank 241-C-106 pit after flushing. Cover plug is lifted out of cover block on initiation of sluicing process.	1. Maintenance error 2. Communications error between different groups using the pit	Repositioned jumpers service tested Cameras used to verify initial jumper integrity Isolation valves (manual) for flush system	Process pit and vault pit leak detectors Material balance every 24 hrs
W320-BCD-TRANS12	Release of energetic radioactive aerosol from transfer line due to blank flange left off flushing connection in Tank 241-AY-102 pit after flushing. Cover plug is lifted out of cover block on initiation of sluicing process.	1. Maintenance error 2. Communications error between different groups using the pit	Repositioned jumpers service tested Cameras used to verify initial jumper integrity Isolation valves (manual) for flush system	Process pit and vault pit leak detectors Material balance every 24 hrs
W320-D-ALL06	Release of a small amount of low energy aerosolized waste through failed filters due to seismic event which induces a steam bump in Tank 241-AY-102, and failure of filters or ducting.	1. Natural Phenomena	None	Seismic shutdown switch
W320-D-ALL07	Release of energetic radioactive aerosol from damaged double shell Tank 241-AY-102 due to seismic event which releases flammable gas from the waste and after shocks cause mechanical sparks which ignites the flammable gas mixture.	1. Natural Phenomena	Mon dome pressure in Tank 241-AY-102 Mon vent flow rate in tanks	None
W320-D-ALL08	Release of energetic radioactive aerosol to atmosphere due to start of air lift circulators in Tank 241-AY-102 resulting in a release of flammable gas plume which is then ignited.	1. Human error 2. Communications error with other workers using the tank 3. IOSRs require activation of ALCs in event temperature above limit	Mon dome pressure in Tank 241-AY-102 Video mon of waste in Tank 241-AY-102 Meas background concentrations for 3-4 weeks prior to sluicing Mon vent flow rate in tanks Mon level growth	None

Table D-4. Defense-in-Depth Controls for Potentially Severe (E3 and E2) Environmental Consequences. (16 sheets)

ID	Hazardous Conditions	Candidate Causes	DID-Preventive	DID-Mitigative
W320-D-ALL09	Release of liquid waste below grade and aerosol release to atmosphere due to seismic event Tank 241-C-106 liner is breached resulting in water leakage into liner gap, steam formation, breaching of tank bottom and large steam bump.	1. Natural Phenomena	Active vent for heat removal Material balance performed every 24 hrs Level mon of Tank 241-C-106 Comm maintained between control trailers	Cover blocks in place Emer Resp Plan/Procedures
W320-D-CHILL01	Release of energetic radioactive aerosol from damaged tank due to a leak and ignition of propylene glycol from pit chiller into Tank 241-C-106.	1. Piping or tubing leak	Vehicle position spotters Tank farm fences	HEPA filter replacement
W320-D-CHILL02	Release of energetic radioactive aerosol from damaged tank due to a leak and ignition of propylene glycol from ventilation chiller into Tank 241-C-106.	1. Piping or tubing leak	Vehicle position spotters Tank farm fences	HEPA filter replacement
W320-D-PUMP01	Release of energetic radioactive aerosol from line break in Tank 241-AY-102 transfer pit due to immersible pump being positioned too high resulting in air entrainment in transfer line. Booster pump torques in reaction to air in transfer line and jumper connectors break. Cover block is off.	1. Operator error in positioning 2. Inadvertant or accidental repositioning 3. Level indication fault 4. Waste level indicator on pump fault	None	Process pit and vault pit leak detectors Material balance every 24 hrs
W320-D-PUMP03	Release of energetic radioactive aerosol from line break in Tank 241-C-106 transfer pit due to immersible pump being positioned too high resulting in air entrainment in transfer line. Booster pump torques in reaction to air in transfer line and jumper connectors break. Cover block is off.	1. Operator error in positioning 2. Inadvertant or accidental repositioning 3. Level indication fault 4. Waste level indicator on pump fault	None	Process pit and vault pit leak detectors Material balance every 24 hrs

Table D-4. Defense-in-Depth Controls for Potentially Severe (E3 and E2) Environmental Consequences. (16 sheets)

ID	Hazardous Conditions	Candidate Causes	DID-Preventive	DID-Mitigative
W320-D-PUMP04	Release of energetic radioactive aerosol from damaged Tank 241-AY-102 due to pumping of more solids than anticipated. Annulus cooling mod not completed resulting in overheating of waste and a tank bump. Bump induces large flammable gas release. It is then ignited resulting in a dome space fire.	1. Mass flowmeter fault or out of calibration 2. Operator error in positioning slurry pump 3. Inadvertant or accidental repositioning 4. Level indication fault 5. Waste level indicator on pump Tank 241-C-106 fault 6. Pump controller fault	Mon dome pressure in Tank 241-AY-102 Video mon of waste in Tank 241-AY-102 Mon vent flow rate in tanks	None
W320-D-TRANS05	Release of energetic radioactive aerosol to atmosphere due to head space gas concentration above LFL in Tank 241-AY-102 with the start of pumping which ignites the flammable gas.	1. Spontaneous GRE 2. Induced GRE	Mon dome pressure in Tank 241-AY-102 Video mon of waste in Tank 241-AY-102 Meas background concentrations for 3-4 weeks prior to sluicing Mon vent flow rate in tanks	None
W320-D-TRANS06	Release of large high energy aerosolized waste to the atmosphere due to slurry transfer rate being excessive resulting in a rapid reduction in the hydrostatic pressure in Tank 241-C-106. This results in a flammable gas release. Gas is ignited and a dome space fire results.	1. Sluice flow control fault	Mon dome pressure in Tank 241-C-106 Mon vent flow rate in tanks	None
W320-D-TRANS07	Release of high energetic aerosolized waste to the atmosphere due to sluice water transfer rate being excessive resulting in the Tank 241-AY-102 waste level being lowered quickly with the waste temperature too high. This results in a large steam bump and flammable gas release with ignition.	1. Operator mistake 2. Level indication fault 3. Pump controller fault	Mon dome pressure in Tank 241-AY-102 Video mon of waste in Tank 241-AY-102 Meas background concentrations for 3-4 weeks prior to sluicing Mon vent flow rate in tanks	None
W320-D-TRANS09	Release of liquid waste below grade and aerosol release to atmosphere due to movement of debris during sluicing which impacts and breaches the Tank 241-C-106 liner, resulting in water leakage into liner gap, steam formation, breaching of tank bottom and steam bump.	1. Expected outcome of high pressure sluice. Many objects are in the waste.	Active vent for heat removal Material balance performed every 24 hrs Level mon of Tank 241-C-106 Comm maintained between control trailers	Cover blocks in place Emer Resp Plan/Procedures

Table D-4. Defense-in-Depth Controls for Potentially Severe (E3 and E2) Environmental Consequences. (16 sheets)

ID	Hazardous Conditions	Candidate Causes	DID-Preventive	DID-Mitigative
W320-D-TRANS10	Release of energetic radioactive aerosol from jumper in pit due to seismic event. Cover block breached by ground motion resulting in spray release.	1. Natural Phenomena	Repositioned jumpers service tested Cameras used to verify initial jumper integrity	Process pit and vault pit leak detectors Material balance every 24 hrs
W320-D-TRANS11	Release of large high energy aerosolized radioactive waste to the atmosphere from a spray leak from transfer line due to seismic event.	1. Natural Phenomena	None	Access cntrl Material balance every 24 hrs
W320-D-VENT12	Release of energetic radioactive aerosol from collapsed Tank 241-C-106 due to incorrect alignment of current ventilation system through sluice nozzle resulting in excessive tank vacuum with loop seal failure.	1. Operator error 2. Communications error	None	None
W320-D-VENT13	Large high energy radioactive aerosolized waste release from Tank 241-AY-102 to the atmosphere due to influx of cold water spray into tank which results in an excessive vacuum. A large flammable gas release is induced. It is then ignited resulting in a dome space fire.	1. Possible result of slurry distribution	Mon dome pressure in Tank 241-C-106 and Tank 241-AY-102 Video mon of waste in Tank 241-AY-102 Meas background concentrations for 3-4 weeks prior to sluicing Mon vent flow rate in tanks	None
W320-D-VENT16	Large high energy aerosolized waste release from Tank 241-AY-102 to the atmosphere due to the loss of primary or annulus ventilation for an extended period which results in a gradual rise in waste temperature. Flammable gas builds up in the dome space to the LFL. It is then ignited resulting in a dome space fire.	1. Extended loss of power 2. Severe ventilation casualty	Mon dome pressure in Tank 241-AY-102 Video mon of waste in Tank 241-AY-102 Meas background concentrations for 3-4 weeks prior to sluicing Mon vent flow rate in tanks	None
W320-D-VENT17	Release of high energy aerosolized release to the atmosphere due to an ice storm which prevents air inflow into Tank 241-AY-102 resulting in an excessive tank vacuum. This results in a flammable gas release with ignition.	1. Natural phenomena	Mon dome pressure in Tank 241-AY-102 Mon vent flow rate in tanks	None

Table D-4. Defense-in-Depth Controls for Potentially Severe (E3 and E2) Environmental Consequences. (16 sheets)

ID	Hazardous Conditions	Candidate Causes	DID-Preventive	DID-Mitigative
W320-D-VENT18	Large high energy radioactive aerosolized waste release from Tank 241-AY-102 to the atmosphere due to volcanic ashfall which prevents air inflow to tank. Excessive vacuum results and flammable gas is released to the dome space. It is then ignited resulting in a dome space fire.	1. Natural phenomena	Mon dome pressure in Tank 241-AY-102 Mon vent flow rate in tanks	None
W320-D-VENT20	Release of energetic radioactive aerosol from collapsed Tank 241-C-106 due to incorrect alignment of new ventilation system through sluice nozzle resulting in excessive tank vacuum with loop seal failure.	1. Operator error 2. Communications error	None	None
W320-E-TERM03	Large high energy radioactive aerosolized waste release from Tank 241-AY-102 to the atmosphere due to lack of controls on operation of tank after it has been turned into a FG group 1 tank. It is ignited from a lightning strike or other event resulting in a dome space fire.	1. Inadequate prediction of waste behavior	Mon dome pressure in Tank 241-AY-102 Video mon of waste in Tank 241-AY-102 Mon vent flow rate in tanks	None
W320-F-TERM05	Release of liquid waste below grade and aerosol release to atmosphere due to high heat load after completion of sluicing process resulting in the need for water addition to Tank 241-C-106 with a deteriorated tank liner, water leakage into liner gap, steam formation, liner breach and steam bump.	1. Error in calculations	Active vent for heat removal Material balance performed every 24 hrs Level mon of Tank 241-C-106 Comm maintained between control trailers	Cover blocks in place Emer Resp Plan/Procedures

BIO = Basis for Interim Operation
GRE = gas release event
HASP = Tank Farms Health and Safety Plan
HEPA = high efficiency particulate air (filter)
JCS = Job Control System
LFL = lower flammability limit
TWRS = Tank Waste Remediation System

This document was too large to scan as a single document; therefore, it has been divided into smaller sections.

Section 9 of 10

Document Information			
Document #	SD-WM-BIO-001	Revision	1
Title	TWRS BASIS FOR INTERIM OPERATION		
Date	10/28/1998		
Originator	Y.G. NOORANI	Originator Co.	FDH
Recipient		Recipient Co.	
References	ECN-644566		
Keywords	AUTHORIZATION BASIS		
Projects	BIO,TWRS,TFARM,W-320		
Other Information	THIS SECTION CONTAINS VOLUME 5 ADDENDUM 2		

HNF-SD-WM-BIO-001
Revision 1

Tank Waste Remediation System Basis for Interim Operation

Volume V:
Addendum 2

Prepared by
DE&S Hanford, Inc. for Lockheed Martin Hanford Corporation

Date Published
September 1998

Prepared for the U.S. Department of Energy

FLUOR DANIEL HANFORD, INC.
Richland, Washington

Hanford Management and Integration Contractor for the
U.S. Department of Energy under Contract DE-AC06-96RL13200

Approved for Public Release; Further Dissemination Unlimited

SAFETY ANALYSIS FOR THE REPLACEMENT CROSS-SITE TRANSFER SYSTEM

This page intentionally left blank.

EXECUTIVE SUMMARY

The purpose of this Addendum to the *Tank Waste Remediation System Basis for Interim Operation* (BIO), HNF-SD-WM-BIO-001, is to incorporate the safety analysis for Project W-058 (Replacement of the Cross-Site Transfer System) into the BIO. The replacement cross-site transfer system was an ongoing project when the BIO was being developed and thus was not included as part of its original scope.

Scope and Structure

The scope of this Addendum is the safety analysis for the replacement cross-site transfer system. The overall approach applied to the analysis for the replacement cross-site transfer system is the same as that described in the BIO. Therefore, many of the detailed discussions in the BIO are equally applicable to the analysis for the replacement cross-site transfer system and will not be repeated. Where there are differences, because of unique features of the replacement cross-site transfer system, these differences will be cited and discussed in detail. When the topics of discussion are the same (such as detailed descriptions of analysis methodologies), the Addendum will briefly discuss the topic and reference the BIO. It is important to note, however, that sufficient detail on the replacement cross-site transfer system will be provided in this Addendum for evaluating the acceptability of future proposed activities and the associated Unreviewed Safety Question determinations.

This Addendum is organized according to the format of DOE-STD-3009-94, *Preparation Guide for U.S. Department of Energy Nonreactor Nuclear Facility Safety Analysis Reports*, with the exception of the Executive Summary, which follows the format established in the BIO. This facilitates comparisons of the summary conclusions drawn in each document. In those chapters where information is provided about Site-wide programmatic controls, the chapters are abbreviated to discuss only those programs or controls affected by the replacement cross-site transfer system. Descriptions of general Site wide programs are provided by reference only.

Safety Management

The discussion of the Safety Management System in the Executive Summary of the BIO is also applicable to the replacement cross-site transfer system.

Hazard Analysis

The discussion of hazard analysis in the Executive Summary of the BIO is also applicable to the replacement cross-site transfer system. Of the 29 representative accidents selected for quantitative analysis in the BIO, six were determined by hazard analysis to require further analysis to account for the replacement cross-site transfer system.

Hazard Classification

According to the BIO, the hazard classification of all double-shell and single-shell waste tanks, and the associated waste transfer systems, is Hazard

Category 2. The replacement cross-site transfer system is also used to transfer tank waste and is therefore classified as Hazard Category 2. (It should be noted that, per U.S. Department of Energy, Richland Operations Office (RL) direction, the Hazard Classification of the Tank Waste Remediation System facility was reevaluated during preparation of the Final Safety Analysis Report. This reevaluation concluded that Hazard Category 2 is the correct designation.)

Accident Analysis

The analysis results for existing transfer systems in the BIO are unaffected by the introduction of the replacement cross-site transfer system. Expansion of the Tank Waste Remediation System Authorization Basis to address the replacement cross-site transfer system, however, has required re-examination of six BIO accidents for specific applicability to the replacement cross-site transfer system. Summaries of these six accidents are presented below, along with a discussion of how the results differ from (or agree with) those originally determined in the BIO. The accidents are categorized in accordance with the definitions used in the Executive Summary of the BIO.

Accidents Below Risk Guidelines with Selected Controls

Analysis determined that five of the six accidents reanalyzed for the replacement cross-site transfer system do not pose significant risks with the application of controls (i.e., the risks are below the evaluation guidelines). For these accidents, application of controls ensures operations can be conducted safely. Additional Defense-in-Depth controls, that serve to further reduce the risks from these accidents, are also identified. The accidents are as follows:

- Nuclear Criticality
- Subsurface leak remaining subsurface
- Surface leak resulting in pool
- Subsurface leak resulting in pool
- Spray leak in structures or from overground waste transfer lines.

The designation of the first 4 accidents listed above, as accidents that are below risk guidelines with selected controls, is consistent with the conclusion drawn in the BIO (where the replacement cross-site transfer system was not considered). However, the conclusions for the spray leak accident are different. (The BIO showed this accident to be slightly above risk guidelines with controls.) The difference is that the two new structures (diversion box 6241-A and vent station 6241-V), evaluated for the replacement cross-site transfer system, both have high-efficiency particulate air filters (unlike other waste transfer structures), which serve to reduce the airborne dose.

Accidents Prevented with Selected Controls

The spray leak from underground waste transfer lines accident (as evaluated for the replacement cross-site transfer line) is prevented by the implemented controls on excavation activities. This conclusion is consistent with that drawn in the BIO.

General Accident Analysis Considerations

The BIO identifies a number of areas where conservatisms could be removed if additional work were performed. This discussion is also applicable to accident analysis for the replacement cross-site transfer system.

Controls

An overall discussion on the selection of controls is provided in the Executive Summary of the BIO. This discussion is also applicable to accident analysis for the replacement cross-site transfer system. The controls identified for the replacement cross-site transfer system have been integrated into the overall set of operational controls established for the Tank Waste Remediation System facility. The control descriptions in Chapter 6.0 of the BIO and in the Technical Safety Requirements document that identify safety functions, operability requirements, and surveillance requirements for the Tank Waste Remediation System facility, have been modified to include the replacement cross-site transfer system.

Defense-in-Depth

The discussion of Defense-in-Depth controls in the Executive Summary of the BIO is also applicable to the analysis for the replacement cross-site transfer system.

Summary Conclusions

In summary, this Addendum to the BIO reaches the following conclusions:

- The selected safety structures, systems, and components and the accompanying controls (Technical Safety Requirements, Health and Safety Plans, and implementing procedures) provide prevention and mitigation measures to address these vulnerabilities.

- The analyses show that these measures provide reasonable assurance that operation of the replacement cross-site transfer system can be conducted safely.

It is important to note that operation of the replacement cross-site transfer system will be integrated into the Tank Waste Remediation System facility operations. The new controls for the replacement cross-site transfer system, stipulated in this Addendum, have been added to Chapter 6.0, "Operational Controls," of the BIO.

Collectively, these conclusions find that the replacement cross-site transfer system can be operated safely following the requirements of this Addendum and the BIO until these documents are replaced by a fully compliant Final Safety Analysis Report.

CONTENTS

1.0 SITE CHARACTERISTICS 1-1
1.1 INTRODUCTION 1-1
1.2 REQUIREMENTS 1-1
1.3 SITE CHARACTERISTICS 1-1

2.0 FACILITY DESCRIPTION 2-1
2.1 INTRODUCTION 2-1
2.2 REQUIREMENTS 2-1
2.3 FACILITY OVERVIEW 2-2
2.4 FACILITY STRUCTURES 2-2
2.4.1 Transfer Pipe System Description 2-2
2.5 PROCESS DESCRIPTION 2-6
2.5.1 Waste Composition 2-6
2.5.2 Process Description 2-6
2.6 CONFINEMENT SYSTEMS 2-7
2.7 SAFETY SUPPORT SYSTEMS 2-8
2.7.1 Fire Protection 2-8
2.7.2 Radiation Protection Systems 2-8
2.8 UTILITY DISTRIBUTION SYSTEMS 2-8
2.8.1 Raw Water System 2-8
2.8.2 Instrument Air System 2-8
2.8.3 Electrical Power Distribution System 2-8
2.9 AUXILIARY SYSTEMS AND SUPPORT FACILITIES 2-9
2.9.1 Control Facility 2-9

3.0 SAFETY ANALYSIS 3-1
3.1 INTRODUCTION 3-1
3.2 REQUIREMENTS 3-1
3.3 HAZARD ANALYSIS 3-1
3.3.1 Methodology 3-1
3.3.2 Hazards Analysis Results 3-3
3.4 ACCIDENT ANALYSIS 3-11
3.4.1 Methodology 3-11
3.4.2 Accident Analysis Scenarios 3-11
3.4.3 Beyond Design Basis Events 3-37

4.0 SAFETY STRUCTURES, SYSTEMS, AND COMPONENTS 4-1
4.1 INTRODUCTION 4-1
4.2 REQUIREMENTS 4-1
4.3 SAFETY-CLASS STRUCTURES, SYSTEMS, AND COMPONENTS 4-2
4.3.1 Safety-Class SSCs 4-2
4.4 SAFETY-SIGNIFICANT STRUCTURES, SYSTEMS, AND COMPONENTS . . . 4-4
4.4.1 Safety-Significant SSCs 4-4

5.0 DERIVATION OF TECHNICAL SAFETY REQUIREMENTS 5-1
5.1 INTRODUCTION 5-1
5.2 REQUIREMENTS 5-1
5.3 TECHNICAL SAFETY REQUIREMENT COVERAGE, AND DERIVATIONS . . . 5-1
5.3.1 AC 5.7 Nuclear Criticality Safety 5-2
5.3.2 AC 5.18 HEPA Filter Controls 5-2

5.3.3 LCO 3.1.1 Transfer System Covers and Entry Doors . . 5-2
5.3.4 LCO 3.1.3 RCSTS Transfer Leak Detection System . . . 5-2
5.3.5 LCO 3.1.5 Replacement Cross-Site Transfer System PRV and Rupture Disk 5-3
5.4 DERIVATION OF FACILITY MODES 5-3
5.5 INTERFACE WITH TSRs FROM OTHER FACILITIES 5-3

6.0 PREVENTION OF INADVERTENT CRITICALITY 6-1
6.1 REQUIREMENTS 6-1
6.2 FACILITY IMPLEMENTATION 6-1
6.3 PROJECT IMPLEMENTATION 6-1

7.0 RADIATION PROTECTION 7-1
7.1 REQUIREMENTS 7-1
7.2 FACILITY IMPLEMENTATION 7-1
7.3 PROJECT IMPLEMENTATION 7-1

8.0 HAZARDOUS MATERIAL PROTECTION 8-1
8.1 REQUIREMENTS 8-1
8.2 FACILITY IMPLEMENTATION 8-1
8.3 PROJECT IMPLEMENTATION 8-1

9.0 RADIOACTIVE AND HAZARDOUS WASTE MANAGEMENT 9-1
9.1 REQUIREMENTS 9-1
9.2 FACILITY IMPLEMENTATION 9-1
9.3 PROJECT IMPLEMENTATION 9-1

10.0 INITIAL TESTING, IN-SERVICE SURVEILLANCE, AND MAINTENANCE 10-1
10.1 REQUIREMENTS 10-1
10.2 FACILITY IMPLEMENTATION 10-1
10.3 PROJECT IMPLEMENTATION 10-1
10.3.1 Initial Testing 10-1
10.3.2 In-Service Surveillance 10-1
10.3.3 Maintenance 10-2

11.0 OPERATIONAL SAFETY 11-1
11.1 REQUIREMENTS 11-1
11.2 FACILITY IMPLEMENTATION 11-1
11.3 PROJECT IMPLEMENTATION 11-1

12.0 PROCEDURES AND TRAINING 12-1
12.1 REQUIREMENTS 12-1
12.2 FACILITY IMPLEMENTATION 12-1
12.3 PROJECT IMPLEMENTATION 12-1

13.0 HUMAN FACTORS 13-1
13.1 REQUIREMENTS 13-1
13.2 FACILITY IMPLEMENTATION 13-1
13.3 PROJECT IMPLEMENTATION 13-1

14.0 QUALITY ASSURANCE 14-1
14.1 REQUIREMENTS 14-1
14.2 FACILITY IMPLEMENTATION 14-1

14.3 PROJECT IMPLEMENTATION 14-1

15.0 EMERGENCY PREPAREDNESS PROGRAM 15-1
15.1 REQUIREMENTS 15-1
15.2 FACILITY IMPLEMENTATION 15-1
15.3 PROJECT IMPLEMENTATION 15-1

16.0 PROVISIONS FOR DECONTAMINATION AND DECOMMISSIONING 16-1
16.1 REQUIREMENTS 16-1
16.2 IMPLEMENTATION 16-1
16.3 PROJECT IMPLEMENTATION 16-1

17.0 MANAGEMENT, ORGANIZATION, AND INSTITUTIONAL SAFETY PROVISIONS . . . 17-1
17.1 REQUIREMENTS 17-1
17.2 FACILITY IMPLEMENTATION 17-1
17.3 PROJECT IMPLEMENTATION 17-1

18.0 REFERENCES 18-1

APPENDIXES

A HAZARDS BASES A-1

B ANALYZED ACCIDENTS AND REPRESENTED HAZARDOUS CONDITIONS B-1

C HAZARD EVALUATION RESULTS C-1

D CONTROL ALLOCATION TABLES D-1

LIST OF FIGURES

2-1 Replacement Cross-Site Transfer System Route F2-1

2-2 Replacement Cross-Site Transfer System Piping F2-2

2-3 Replacement Cross-Site Transfer System Pressure Interface F2-3

2-4 Diversion Box 6241-A Overview F2-4

2-5 Diversion Box 6241-A F2-5

2-6 Vent Station 6241-V Overview F2-6

2-7 Vent Station 6241-V F2-7

LIST OF TABLES

2-1 RCSTS Design Parameters T2-1

3-1 RCSTS Hazards Identification 3-7

3-2 Hazard Identification Checklist and Energy Designators 3-8

3-3 Accidents Analyzed and Comparison of RCSTS to TWRS BIO Accident Analysis 3-9

3-4 BIO Accidents Reanalyzed for RCSTS 3-10

3.4.2.18-1 Consequences of RCSTS Surface Leak Resulting in Pool without Controls 3-23

3.4.2.18-2 Consequences of RCSTS Surface Leak Resulting in Pool with Controls 3-23

3.4.2.18-3 New Safety Structures, Systems, and Components for RCSTS Surface Leaks Resulting in Pool 3-24

3.4.2.18-4 New Technical Safety Requirements Controls for RCSTS Surface Leaks Resulting in Pool 3-25

3.4.2.19-1 New Safety Structures, Systems, and Components for RCSTS Subsurface Leak Resulting in Pool 3-29

3.4.2.19-2 New Technical Safety Requirements Controls for RCSTS Subsurface Leak Resulting in Pool 3-29

3.4.2.20-1 Consequences of RCSTS Spray Leak without Controls 3-33

3.4.2.20-2 Consequences of RCSTS Spray Leak with Controls 3-33

3.4.2.20-3 New Safety Structures, Systems, and Components for RCSTS Spray Leaks 3-34

3.4.2.20-4 New Technical Safety Requirements Controls for RCSTS Spray Leaks 3-35

4-1 New RCSTS Safety-Class Structures, Systems, and Components Summary 4-7

4-2 New Safety-Significant Structures, Systems, and Components Summary 4-10

LIST OF TERMS

AC	Administrative Control
ALARA	As Low As Reasonably Achievable
ANSI/ASME	American National Standards Institute/American Society of Mechanical Engineers
ASTM	American Society for Testing and Materials
BIO	Basis for Interim Operation
CSER	Criticality Safety Evaluation Report
D&D	decontamination and decommissioning
DCRT	double-contained receiver tank
DOE	U.S. Department of Energy
DST	double-shell tank
FDH	Fluor Daniel Hanford
FSAR	Final Safety Analysis Report
HazOp	hazards and operability study
HEPA	high-efficiency particulate air (filter)
LCO	Limiting Condition for Operation
N/A	not applicable
OCS	operator control station
PCU	process control unit
PE	potentially present elsewhere in/adjacent to facility
PF	potentially present in the facility
RCSTS	replacement cross-site transfer system
RL	U. S. Department of Energy, Richland Operations Office
SSC	structure, system, and component
SST	single-shell tank
TSR	Technical Safety Requirement
TWRS	Tank Waste Remediation System
USQ	Unreviewed Safety Question

1.0 SITE CHARACTERISTICS

The replacement cross-site transfer system (RCSTS) is located within the Tank Waste Remediation System (TWRS) facility, and therefore has the same site characteristics as the balance of the TWRS facility. A description of site characteristics necessary for understanding the TWRS and Hanford Site environment is being developed as Chapter 1.0 of the TWRS Final Safety Analysis Report (FSAR) and is included in its entirety in Appendix C, "Site Characteristics," of the Basis for Interim Operation (BIO).

1.1 INTRODUCTION

The objective of this chapter is to describe the site characteristics of the Hanford Site, as applicable to the safety analysis for the RCSTS.

1.2 REQUIREMENTS

Appendix C of the BIO lists the applicable requirements. No changes to these requirements result from the installation or operation of the RCSTS.

1.3 SITE CHARACTERISTICS

The site characteristics for the TWRS facility, which includes the RCSTS, are described in Appendix C of the BIO.

This page intentionally left blank.

2.0 FACILITY DESCRIPTION

A description of the Tank Waste Remediation System (TWRS) facility is provided in Section B2.0, "Facility Description" of Appendix B, "Facility and Process Description," of the Basis for Interim Operation (BIO).

2.1 INTRODUCTION

In this chapter, the replacement cross-site transfer system (RCSTS) facilities and operations are described to support assumptions used in Chapter 3.0, "Safety Analysis."

2.2 REQUIREMENTS

The design codes, standards, regulations, and U.S. Department of Energy orders required for establishing the Authorization Basis of the TWRS facilities are listed in Appendix B, Section B2.2, "Requirements," of the BIO. Because the RCSTS is a part of the TWRS facility, the listed documents also apply to the RCSTS. In addition to these documents, the RCSTS also was designed to comply with the following requirements:

- DOE 6430.1A, *General Design Criteria*, Change 0 (1989)
- SDC-4.1, *Standard Architectural-Civil Design Criteria: Design Loads for Facilities* (1993)
- WHC-SD-W058-FDC-001, *Functional Design Criteria for Project W-058, Replacement of the Cross-Site Transfer System* (1996)
- ACI 349-90, *Code Requirements for Nuclear Safety Related Concrete Structures* (1990)
- 40 CFR 264, "Standards for Owners and Operators of Hazardous Waste Treatment, Storage, and Disposal Facilities" (1995)
- 40 CFR 265, "Interim Status Standards for Owners and Operators of Hazardous Waste Treatment, Storage, and Disposal Facilities" (1995)
- WAC 173-303, "Dangerous Waste Regulations" (1995)
- DOE 5480.11, *Radiation Protection for Occupational Workers, Change 3* (1992)
- ANSI/ASME B31.3, *Chemical Plant and Petroleum Refinery Piping* (1993)
- ASME AG-1, *Code on Nuclear Air and Gas Treatment* (1991).

2.3 FACILITY OVERVIEW

An overview of the tank farm facilities configuration, including a brief history of TWRS operations, is provided in Section B2.3, "Facility Overview," of Appendix B of the BIO.

The RCSTS provides a means of transferring single-shell tank (SST) waste, double-shell tank (DST) waste, and other liquid slurry wastes resulting from normal 200 West Area operations to the treatment, storage, and disposal facilities in the 200 East Area. East to west transfers can also be made. The transfer route is shown in Figure 2-1.

2.4 FACILITY STRUCTURES

Detailed descriptions of the TWRS facilities are provided in Section 2.4, "Facility Structures," of Appendix B of the BIO. Many of these descriptions are relevant to the RCSTS, since it interfaces with these existing tank farm systems. Presented below is a description of the RCSTS transfer piping and associated systems and structures.

2.4.1 Transfer Pipe System Description

The RCSTS is a buried pipe-in-pipe system approximately 10.5 km (6.5 mi) long. The primary piping is 7.6-cm (3-in.), 304 L stainless steel, Schedule 40. The encasement piping is 15.2-cm (6-in.), ASTM A53 Grade B carbon steel, standard weight and 30.5-cm (12-in.) ASTM A53 Grade B carbon steel, standard weight at the expansion loops, with epoxy coating to minimize external corrosion. The primary piping is designed in accordance with the requirements of ANSI/ASME B31.3, while the overall pipe-in-pipe design complies with the secondary containment requirements stipulated in the standards listed in Section 2.2 of this addendum. A material of construction position paper (Parsons 1994, *Project W-058/W-028, Material of Construction Position Paper*) provides the justification for selecting the piping based on the reliability of the selected materials. The RCSTS pipe design is depicted in Figure 2-2.

The 241-SY-A and 241-SY-B valve pits in the 200 West Area are connected with the 244-A lift station in the 200 East Area by the RCSTS. Liquid waste can be transferred in either direction between the 200 East and 200 West Areas through one of the two RCSTS lines, using existing transfer pumps. The other RCSTS line is designed to transfer wastes with as much as 30 vol% solids from the 200 West Area to the 200 East Area, using existing tank farm transfer pumps and the RCSTS booster pumps. (It should be noted that this 30 vol% solids is based on a displacement measurement in a sight glass and that normal loading for slurry transfers is expected to be 10 vol% solids or less.)

The RCSTS provides one line each to the 241-SY-A and 241-SY-B valve pits in the 200 West Area. These buried lines follow a single construction trench to a new diversion box, also located in the 200 West Area (diversion box 6241-A). Two booster pumps are connected to one of the lines in this diversion box.

From diversion box 6241-A, the lines travel to another new structure at the high point in the route, vent station 6241-V, located in the 600 Area, between the 200 East and 200 West Areas. Each transfer line has a vent at the high point that allows air to be introduced into the line so that the line can drain after waste transfers are completed.

The transfer lines continue on to the 244-A lift station in the 200 East Area. The lines are connected to new nozzles that are installed in the lift station wall.

The primary and encasement pipe are all-welded construction. No remotely installed jumpers are used except at the interfaces with existing diversion boxes. In addition, the piping is buried below the frost line on the 200 Area plateau.

The system is designed to minimize the possibility of plugging in the pipes, pipe fittings, and other piping components. To promote gravity drainage, the system is designed so that the vent station is the high point and the end points in East and West Area are the low points with the pipe having a continuous slope of at least 0.25%. Valves will fail in the "as-is" position, allowing waste to drain to the source and destination tanks. The encasement piping is insulated with polyurethane foam and a fiberglass reinforced-plastic jacket to minimize the temperature drop of an uninterrupted waste transfer to a maximum of 20 °F.

The encasement piping is terminated inside each of the various structures encountered along the RCSTS route. Each segment of the encasement is provided with a drain valve at each end and with a rupture disk at the diversion box and vent station. The rupture disk limits any potential pressure buildup within the encasement. Regular leak testing of the encasement segments can be performed from inside the diversion box and vent station, and from the encasement connections located in the 244-A lift station and the 241-SY-A and 241-SY-B valve pits.

The buried piping is marked by a 15.2-cm- (6-in.-) wide continuous plastic sheet marker placed in the soil directly above each pipe, one foot below the ground surface for identification of hazardous waste lines. Additionally, magenta and yellow route markers that extend 1.5 m (5 ft) aboveground are located at road and rail crossings, are spaced at maximum intervals of 45.7 m (150 ft), are located at changes in direction, and are staggered every 22.9 m (75 ft) with electrical conduit markers.

In order to meet the RCSTS design requirements (WHC-SD-W058-FDC-001, *Functional Design Criteria for Project W-058, Replacement of the Cross-Site Transfer System*), the boosted system will have a maximum operating pressure of 8,446.1 kPa (1,225 lbs/in^2). The maximum pressure produced by a combination of the transfer and booster pumps during a no-flow condition is 9,859.5 kPa (1,430 lbs/in^2), which is within the limits of the piping code. Even though the maximum pressure produced in the line that does not use the booster pump is 1,585.8 kPa (230 lbs/in^2), both lines are designed to the higher pressures noted above. Because most wastes will not have the combination of all

possible worst-case design parameters, listed in Table 2-1, operating pressure will normally be significantly less than the design pressure. Pressure interfaces for the RCSTS are shown in Figure 2-3.

As indicated in Figure 2-3, the RCSTS is designed for a higher pressure than the piping beyond the lift station to which it is connected. This existing piping is protected from overpressurization by two redundant relief valves in the boosted line, which are installed in the 244-A lift station. A rupture disk is located immediately upstream of and in line with each relief valve to keep the valve from becoming contaminated under normal conditions and thereby facilitates valve calibration and maintenance. At a pressure of 230 psig (1586 kPa), the rupture disk will rupture, an alarm will activate at the operator control station (OCS), and the relief valve will discharge into the 244-A catch tank. It should be noted that the 230 psig (1586 kPa) relief valve setting is based on the lowest maximum operating pressure of the East Tank Farm piping that can receive flow from the RCSTS.

Each of the two rupture disk/relief valve systems is connected to the 244-A catch tank by a 3-inch line. The 244-A catch tank is a carbon steel tank located in a steel-lined vault within the 244-A lift station. The tank has a capacity of 61,627 L (16,280 gal). (The maximum amount of flow to the tank through the RCSTS pressure relief valve is 15,900 L [4,200 gal] based on an operator response of 30 minutes.)

2.4.1.1 Flush Water System. Flush water is provided at the 241-SY Tank Farm for boosted transfers. The flush system will be available before a transfer is started. The flush system is an aboveground installation designed to flush the boosted line at 1.8 m/s (6 ft/s). The water for this system comes from a 178,000-L (47,000-gal) tank that is filled by a raw water supply line from the 241-SY raw water service pit. The raw water used in making up flush solutions is low in chlorides and fluorides (historically less than 1 ppm of either). The insulated tank will store heated flush water and is vented to the atmosphere. The raw water supply line to the water flush tank allows chemical addition and mixing in order to adjust the pH. Flush water in the tank will be conditioned to a pH that is approximately 11.0.

The flush system is isolated from the waste transfer system by a check valve followed by two valves with a pressure transmitter (with an associated alarm) between them, in the 241-SY-A valve pit. During waste transfer operations the valves are closed to isolate the flush system from the transfer system. If waste leaks by the first valve, the pressure transmitter will actuate an alarm and shut down the transfer pumps. (The pressure transmitter is hardwired from its location in the 241-SY-A valve pit to the 241-SY-271 instrument building. On a high pressure indication it provides a signal into the existing 200 West master shutdown circuit.) The valves prevent the backflow of waste into the flush lines and water flush tank.

2.4.1.2 Leak Detection. Any leak detected in the RCSTS structures will automatically stop the transfer in progress by stopping all operating pumps and preventing additional waste from being transferred until the alarm is cleared. Leak detection systems are located at a low-point sump in the diversion box and vent station to provide an indication of a leak. These leak detection systems include dual probe electrodes, induction-type relays, fail-safe relays, transmitters, and reset switches.

In the RCSTS transfer line, a continuous coaxial cable is run in the annular region between the primary and secondary pipe (Figure 2-2). Before initial startup, this annular region is filled with an inert gas to minimize corrosion and spurious leak detection alarms. After the annular region is filled, valves on each end of each encasement section are then closed to isolate the purge gas. This system alarms in the OCS and provides the location of the detected leak.

2.4.1.3 Diversion Box 6241-A. Diversion Box 6241-A is located in the 200 West Area and contains two booster pumps connected in parallel to one of the transfer lines. An interlock prevents the two pumps from being operated simultaneously.

The two booster pumps are multistage, horizontal, split-case, centrifugal pumps with an all-stainless steel volute and impeller. Each booster pump has a variable speed drive that varies the speed of the pump to maintain waste velocity at the rate required to prevent line plugging (up to 1.8 m/s [6 ft/s]) over a wide range of waste characteristics. The pumps were fabricated and assembled in accordance with NFPA 70, *National Electrical Code*.

The diversion box pit is entered only for certain maintenance tasks and only after the transfer line has been flushed and appropriate entrance requirements are met. The pits are accessed for maintenance through an airtight entry door shielded by a labyrinth wall on the inside of the pit. Penetrations for an air sample line, an air exhauster hookup, a liner washdown system, and an emergency pumpout line are also provided. Air passes to and from the diversion box (due to temperature and pressure changes) through a HEPA filter connected to a 15 cm (6-in) pipe that penetrates the wall at grade level near the roof. A portable exhauster can be connected to the air exhauster hookup line to provide ventilation, when required.

2.4.1.4 Vent Station 6241-V. Vent station 6241-V is located approximately midway between the 200 West and 200 East Areas at the high point in the system. After a waste transfer and flush, a negative pressure will develop at the system high point as fluid attempts to drain by gravity to the sending and receiving tanks. Each transfer line has a vent at the high point that will allow air to be introduced into the transfer lines to break this vacuum.

Each vent line has two pneumatic valves in series that are normally closed to isolate the line from the waste transfer piping. A pressure transmitter is located between the two valves and is interlocked to shut down the transfer and booster pump upon detection of pressure when the two valves are closed. In addition, the two valves are interlocked such that they cannot be opened unless a pressure sensor in the vent station transfer piping registers a negative pressure, which will develop only when the line is

draining. When a break of the suction in the line is desired, the two pneumatic valves will be opened (along with a third isolation valve near the filter) and air will be drawn into the transfer line through a HEPA filter. The HEPA filter provides protection against the remote possibility of contaminated air exiting the transfer pipe into the vent station.

The vent station pit is entered only for certain maintenance tasks and only after the transfer line has been flushed and appropriate entrance requirements are met. The pits are accessed for maintenance through an airtight entry door shielded by a labyrinth wall on the inside of the pit. Penetrations for an air sample line, an air exhauster hookup, liner washdown system, and an emergency pumpout line are also provided. Air passes to and from the vent station (due to temperature and pressure changes) through a HEPA filter connected to a 15-cm (6-in) pipe that penetrates the wall at grade level near the roof. A portable exhauster can be connected to the air exhauster hookup line to provide ventilation, when required.

2.4.1.5 Instrumentation and Control System. Instrumentation and control of the RCSTS is centered around a computer-based monitor and control system that controls the entire process from the existing 242-S Evaporator building in the 200 West Area. The OCS consists of a personal computer running graphical, object-oriented, database software with a graphical cathode-ray tube/operator interface. The OCS is interconnected to a series of local process control units (PCUs) installed at each pit. Each PCU is used to collect process input, control process outputs, communicate with the OCS, and execute programmable control schemes. Local control may be accomplished from the PCU. The entire control system may be operated from any of the PCUs with the use of a portable terminal.

2.5 PROCESS DESCRIPTION

2.5.1 Waste Composition

The RCSTS will transfer wastes between the tanks in the 200 East and 200 West Area tank farms. The chemical composition of the waste for any given transfer through the RCSTS will depend on the originating tank.

2.5.2 Process Description

The most common type of transfer will be from the 200 West Area to the 200 East Area via Tank 241-SY-102. A transfer pump in the sending tank will retrieve the waste and send it to the 241-SY-A or 241-SY-B valve pit. Depending on the type of waste, the capabilities of the transfer pump and the destination of the waste, it will go either into the boosted or unboosted line. If the waste goes through 241-SY-B, it will enter the slurry line where booster pumps are available at RCSTS diversion box 6241-A (or they may be bypassed) to ensure that the required minimum velocity is maintained to prevent the settling of solids. The booster pumps have a variable speed drive that uses a flow-indicating controller to maintain the desired flow rate. A master pump shutdown circuit automatically shuts down a transfer in the

event that a leak occurs during a transfer. A single signal from a pit leak detector is sufficient to initiate the shutdown. (Depending on the nature and duration of the shutdown, the transfer will either be restarted or the line will be flushed.)

Once the route is established and a transfer is started, several parameters will be monitored at the interfacing facilities to ensure the transfer proceeds properly. The booster pump in use is monitored for start/stop, motor speed, pump bearing vibration, motor-winding temperature, pump-bearing temperature, and pump-seal failure. The pumped line is also monitored for pressure, temperature, flow rate, valve status, misrouting detection, and leak detection. The temperature is monitored at both the sending and the receiving tanks. A pressure transmitter on the boosted line provides high-pressure indication with a software interlock to shut down the pump on high pressure. Other indications that the transfer is not proceeding properly may result in an automatic or manual shutdown of the transfer.

Valves located within the RCSTS may be positioned by the operator at the OCS or can be operated locally. Position indication is provided locally and at the OCS by providing valves with limit switches for the fully open and the fully closed positions. A display graph shows the status of valves. Once a route has been selected, the valves are interlocked to prevent a misrouting.

Once a transfer is complete, the transfer piping is flushed with water as required. This flush reduces the radioactivity, removes any residual solids in the transfer lines, and also helps to minimize corrosion.

Transfer lines may be preheated, if required, by using flushing water heated in the water flush tank. This feature will be used if the waste is prone to plugging because of a decrease in temperature.

2.6 CONFINEMENT SYSTEMS

The confinement systems of the RCSTS include the transfer equipment (i.e., piping) and the associated structures (diversion box 6241-A and vent station 6241-V). The inner piping provides the primary confinement of the transferred waste while the encasement piping provides a secondary confinement. The RCSTS structures (diversion box 6241-A and vent station 6241-V) will provide confinement of any leaks that develop in equipment located within the structures (such as valves, or the booster pumps). Each of these structures is constructed of cast-in-place reinforced concrete, designed to comply with the structural requirements listed in Section 2.2 of this addendum. In addition, both structures have a HEPA filter (connected to a 15 cm (6-in) pipe that penetrates the wall at grade level near the roof), which serves as an additional confinement feature. These HEPA filters meet the requirements of ASME AG-1, *Code on Nuclear Air and Gas Treatment*. During transfer operations, the entry door is closed and the pipe penetrations are capped or flanged so that air forced from the structure (due to pressure or temperature changes) passes through the filter. (Prior to initial operation, a leak test of the diversion box and vent station was performed.)

2.7 SAFETY SUPPORT SYSTEMS

2.7.1 Fire Protection

It was concluded in WHC-SD-W058-FHA-001, *Fire Hazards Analysis for the Replacement Cross-Site Transfer System, Project W-058* that a fire protection system for the RCSTS is not required. Normal fire safety practices will be followed. Combustible material and fire loadings will be held to a minimum. The support buildings, diversion box 6241-A, and vent station 6241-V are constructed of concrete and the risk of fire loss within them is very small.

2.7.2 Radiation Protection Systems

There are no permanent radiation monitoring systems installed within the RCSTS structures. Portable radiation monitoring systems are used during inspection and maintenance activities.

2.8 UTILITY DISTRIBUTION SYSTEMS

2.8.1 Raw Water System

The RCSTS uses existing raw water systems for the normal flushing operation. The flush tank is connected to the 241-SY Tank Farm raw water system, and will be filled, as necessary, prior to commencing waste transfers.

2.8.2 Instrument Air System

At diversion box 6241-A and at vent station 6241-V, a small packaged air compressor and dryer are used to provide dry, oil-free, instrument-quality air for operation of the pneumatic valves and seal air for the booster pump shaft seals.

2.8.3 Electrical Power Distribution System

At diversion box 6241-A, new 13.8-kV lines extend from nearby existing 13.8-kV lines, C8-L3 and C8-L4. Each line supplies a pad-mounted 13.8 kV-480Y/277 V ac, 3-phase, 4-wire, 60 Hz transformer rated at 500 kVA. Each transformer is sized to meet all electrical requirements at this diversion box. The transformers supply a 480 V panel that distributes power to each component.

The electrical power for vent station 6241-V is provided from an existing 13.8 kV-480Y/277 V ac, 3-phase, 4-wire, 60 Hz transformer rated at 225 kVA, supplied by the existing overhead 13.8-kV line C8-L7. The transformer supplies a 480 V panel that distributes power to each component.

The electrical power for the flush system is provided from an existing 480V switchgear located in the 252-S substation building. Two new 480 V ac, 800 A, 3-phase, 60 Hz circuit breakers have been added to spare compartments of the switchgear. Each circuit breaker will provide power for one 498 KW flush water heater and smaller loads including the flush water pump.

2.9 AUXILIARY SYSTEMS AND SUPPORT FACILITIES

The TWRS auxiliary system and support facilities include administrative areas, control facilities, communications systems, lighting, and sewage treatment. These facilities will also be used to support RCSTS operation and are described in Section 2.9, "Auxiliary Systems and Support Facilities," in Appendix B of the BIO.

2.9.1 Control Facility

The 242-S Evaporator control room monitors the 200 West Area tank farm system parameters (e.g., ventilation and tank level) or valve positioning, pump operation, and tank-level data during waste transfers. In addition, the 242-S Evaporator control room will be used to monitor and control the transfers between the 200 Areas through the RCSTS.

This page intentionally left blank.

Figure 2-1. Replacement Cross-Site Transfer System Route.

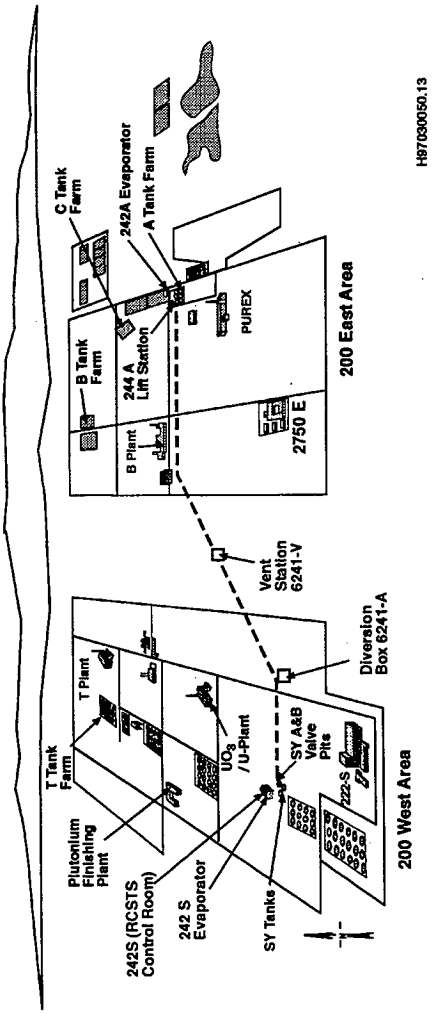

Figure 2-2. Replacement Cross-Site Transfer System Piping.

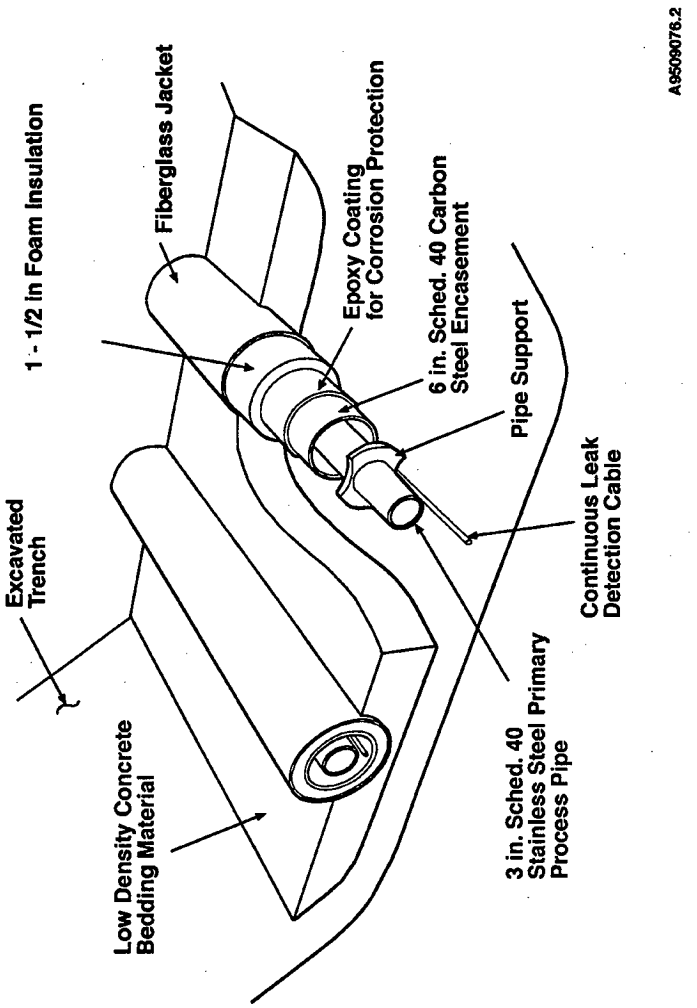

Figure 2-3. Replacement Cross-Site Transfer System Pressure Interface.

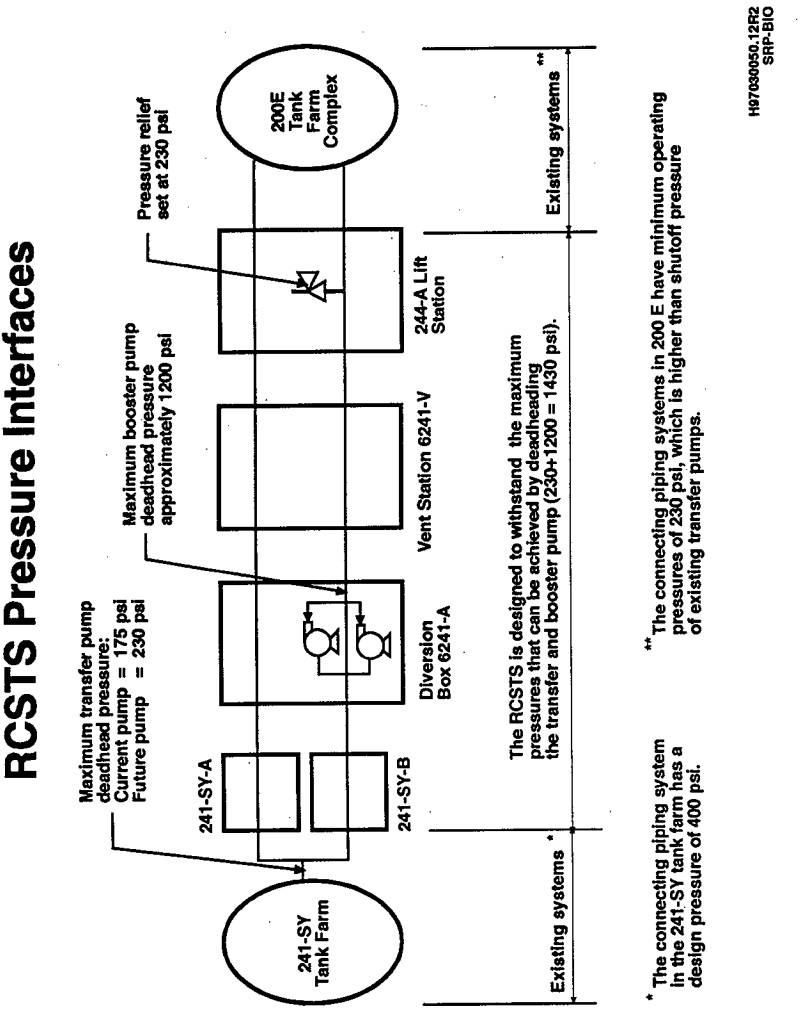

Figure 2-4. Diversion Box 6241-A Overview.

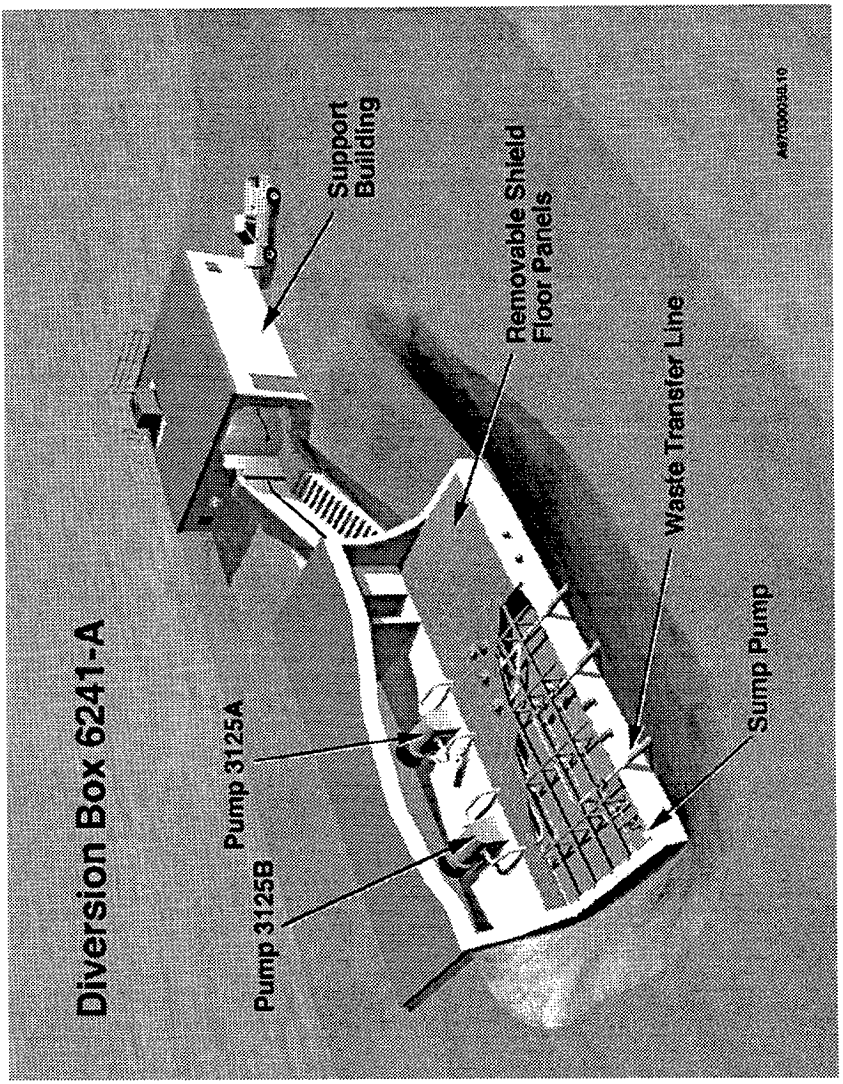

Figure 2-5. Diversion Box 6241-A.

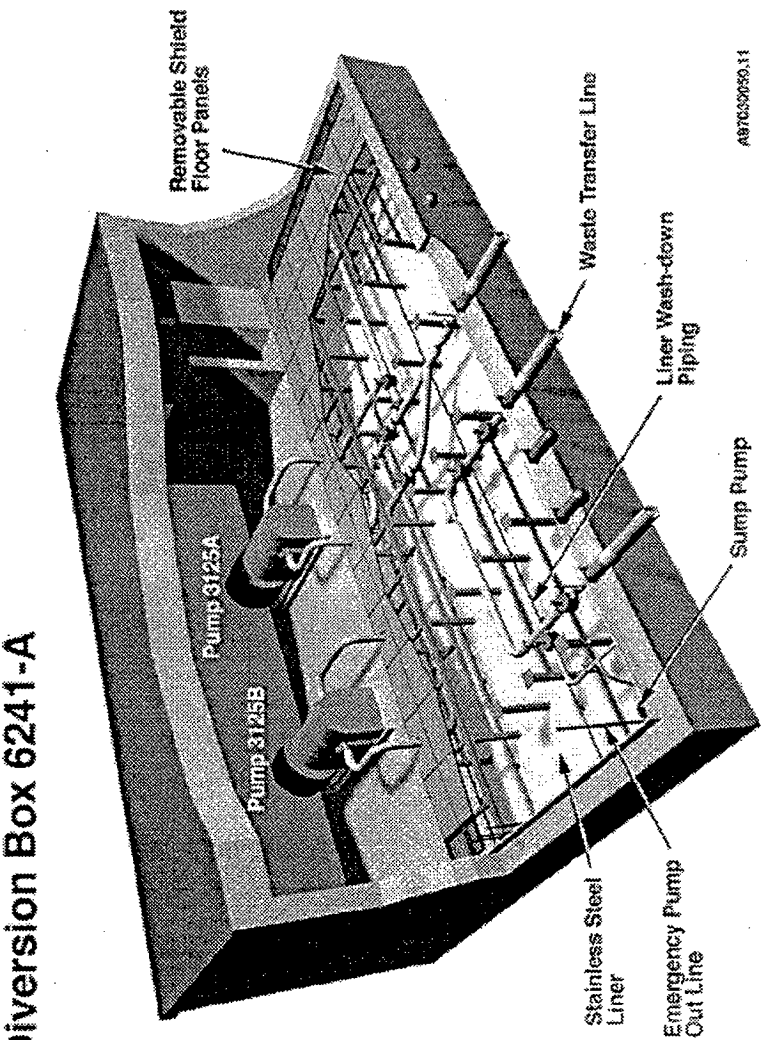

Figure 2-6. Vent Station 6241-V Overview.

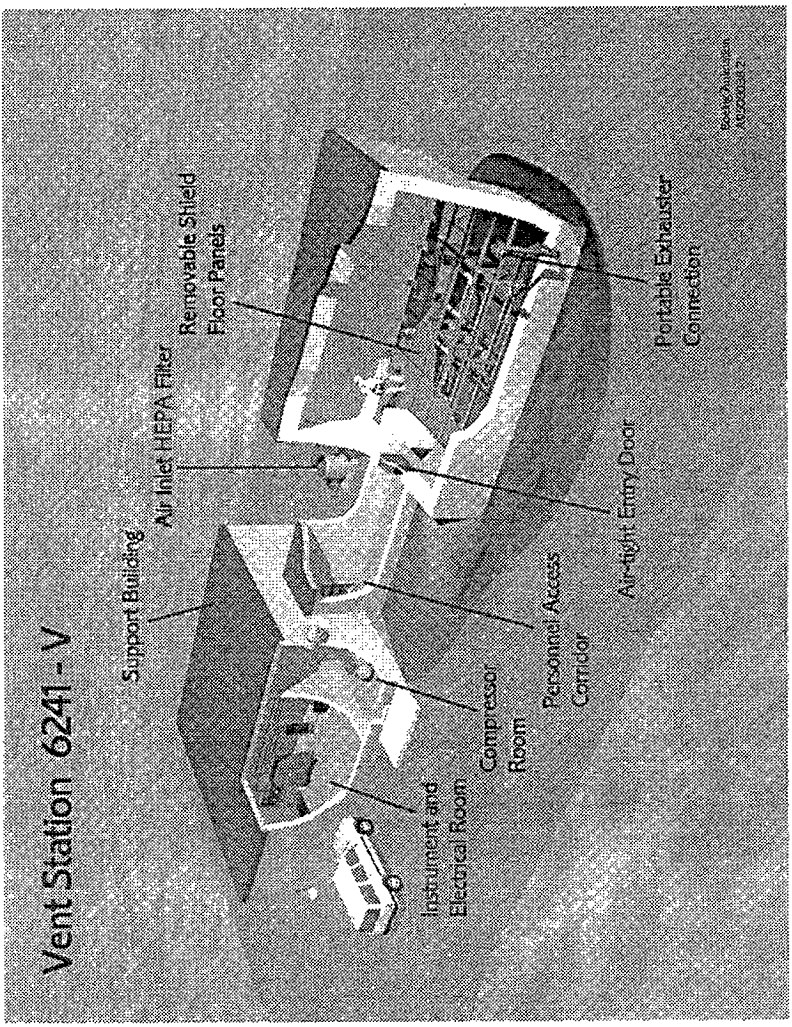

Figure 2-7. Vent Station 6241-V.

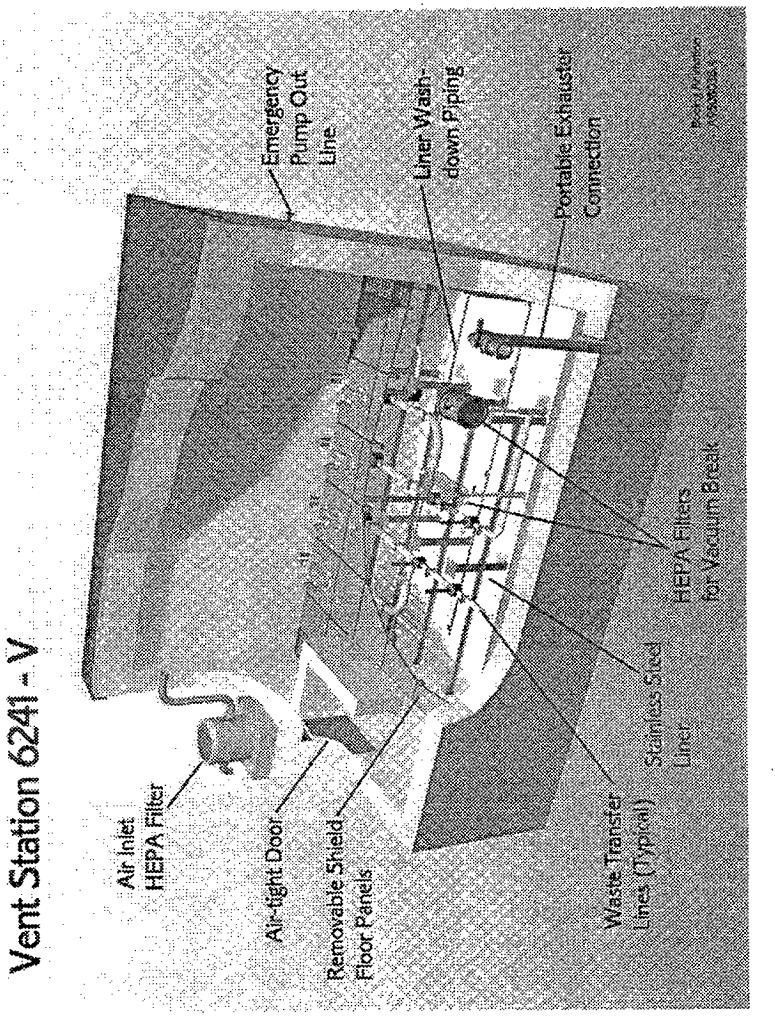

This page intentionally left blank.

3.0 SAFETY ANALYSIS

3.1 INTRODUCTION

The safety analysis of the replacement cross-site transfer system (RCSTS) facilities and operations are described in this chapter. The discussions in Section 5.0, "Safety Analysis," of the Basis for Interim Operation (BIO), on safety analysis, hazard classification, and the controls derived from hazard and accident analysis, are also applicable to the safety analysis for the RCSTS.

3.2 REQUIREMENTS

DOE orders and standards that provide requirements and guidance for hazard and accident analyses for nonreactor nuclear facilities are as follows:

- DOE 5480.23, *Nuclear Safety Analysis Reports*, Change 1 (1994)
- DOE-STD-1027-92, *Hazard Categorization and Accident Analysis Techniques for Compliance with DOE Order 5480.23, Nuclear Safety Analysis Reports* (1992)
- DOE-STD-3009-94, *Preparation Guide for U.S. Department of Energy Nonreactor Nuclear Facility Safety Analysis Reports* (1994).

Additional requirements for hazard and accident analyses are identified in Section 5.0 of the BIO. The DOE requirements on the definition of the Hanford Site boundary and on risk guidelines, that were followed in the BIO, are also applied to the analyses presented in this Addendum.

3.3 HAZARD ANALYSIS

Presented in this section are the methodology and results of the hazard analysis conducted for the RCSTS facilities and operations. The types of events considered in the RCSTS hazard analysis are internal events, external events, and natural phenomena that can cause the uncontrolled release of radioactive or hazardous materials and affect the public, workers, or the environment. Sabotage and terrorism are not considered.

3.3.1 Methodology

The methodology used to perform the RCSTS hazard analysis is the same as that described in Section 5.2.1, "Methodology," and Appendix D, "Hazard Analysis Results Report," (Section D2.0, "Hazard Analysis Methodology") of the BIO. Details of the hazard analysis, as related to the RCSTS, are presented below.

3.3.1.1 Hazard Identification. The hazards analysis includes identification of the hazards associated with the RCSTS design, processes, and operations. The same methodology described in Section 5.2.1.1, "Hazard Identification," and D2.1, "Hazard Identification," (Appendix D) of the BIO was used for the RCSTS. The hazard identification form and related checklist used for the RCSTS evaluation are the same as those shown in Tables D2.1-1, "Hazards Identification Form," and D2.1-2, "Hazard Identification Checklist and Energy Designation," (Appendix D) of the BIO.

It should be noted that the RCSTS material at risk assumptions are based on the following:

- **Chemical Inventory** — The source for the RCSTS maximum hazardous chemical inventory is WHC-SD-WM-SARR-011, *Toxic Chemical Considerations for Tank Farm Releases*. This document contains the bounding limits for chemical concentrations for the waste to be transported through the RCSTS.

- **Radiological Inventory** — The RCSTS worst-dose radiological inventory is based on WHC-SD-WM-SARR-016, *Tank Waste Compositions and Atmospheric Dispersion Coefficients for Use in Safety Analysis Consequence Assessments*, and WHC-SD-WM-SARR-037, *Development of Radiological Concentrations and Unit Liter Doses for TWRS FSAR Radiological Consequence Calculations*. These documents contain bounding unit-liter doses for the tanks within the TWRS facility. Aging waste is the bounding unit-liter dose used in the RCSTS analysis. To be consistent with the BIO, a unit-liter dose of 33 vol% solids and 67 vol% liquids was conservatively used in the analyses to bound the RCSTS transfer capabilities (i.e., 30 vol% solids maximum).

3.3.1.2 Hazard Topography. The TWRS hazard topography is described in Section D2.2, "Hazard Topography," (Appendix D) of the BIO. The hazardous conditions identified for the components and activities of the RCSTS were mapped into this topography.

3.3.1.3 Hazard Evaluation. Detailed discussions of hazard evaluation techniques are presented in Sections 5.2.1.2, "Hazard Evaluation," and Section D2.3, "Hazard Evaluation," (Appendix D) of the BIO. The methodology described in these sections was applied to the hazard evaluation of the RCSTS. A hazards and operability (HazOp) study was performed by a team of cognizant TWRS Operations and Engineering personnel, safety analysts familiar with the RCSTS, and technical experts in specialty areas for the RCSTS. This study is documented in WHC-SD-W058-PHA-001, *Hazards and Operability Study for the Replacement Cross-Site Transfer System*. A revision to this document has been made to account for changes to the original RCSTS design.

After the list of hazards were identified through the HazOp process, these hazards were compared with those associated with the existing cross-site transfer line in the BIO hazards database. Each existing cross-site transfer line hazard was found to be accounted for in the RCSTS hazards list. The BIO hazard identifier was incorporated into the related RCSTS hazard identifier to facilitate future reference.

3.3.1.4 Candidate Accident Selection. The methodology for candidate accident selection is described in Section 5.2.1.3, "Accident Selection," and Section D2.4, "Candidate Accident Selection," (Appendix D) of the BIO. This methodology was applied to accident selection for the RCSTS. The initial list of bins was based on the list of candidate accidents developed for the BIO. Evaluation of the individual RCSTS hazards identified no unique hazards that would result in the establishment of another accident bin, beyond those used in the BIO.

3.3.1.5 Controls Identification. The methodology for controls identification is described in Section 5.2.1.4, "Controls Identification," and Section D2.5, "Controls Identification," (Appendix D) of the BIO. This BIO methodology was also applied to controls identification for the RCSTS.

3.3.2 Hazards Analysis Results

3.3.2.1 Hazard Identification. Results of the hazard identification activities for the RCSTS are presented in the following sections. Details of the hazard analysis are presented in the following appendices of this Addendum:

- Appendix A, "Hazard Basis"
- Appendix B, "Analyzed Accidents and Represented Hazardous Conditions"
- Appendix C, "Hazard Evaluation Result"
- Appendix D, "Control Allocation Tables."

3.3.2.1.1 Material at Risk. The material at risk for each component of the RCSTS is identified in Table A-2 and was developed from information obtained during hazard analysis activities. The RCSTS will transfer tank wastes which contain radioactive material and chemical compounds (e.g., sodium hydroxide and sodium nitrate) typically found in waste tanks. Radiological and chemical composition of the transferred waste will depend on the constituents of the originating tank. The RCSTS may also contain flush solutions, consisting of water with enough sodium hydroxide added to bring the pH to approximately 11. Other chemicals may be added (e.g., sodium nitrate) to the flush solution.

The radiological material at risk is assumed to be from the worst-case tank in the Aging Waste Facility. The composition of this waste is documented in WHC-SD-WM-SARR-037. The toxicological composition of the waste is defined in WHC-SD-WM-SARR-011.

Hazardous Materials External to RCSTS. The RCSTS does not store or provide chemicals for process activities other than small quantities of sodium hydroxide used in the flush water system.

3.3.2.1.2 Energy Sources. The next step in the hazard identification process entails the identification of the energy sources that could contribute to the uncontrolled release of the material at risk. The energy sources for the RCSTS were identified using an energy source checklist.

The checklist that was applied to the RCSTS was developed from the management oversight and risk tree list (DOE-76-45/4 SSDC-4, *MORT User's Manual*) with other energy sources, specific to TWRS facilities, included.

The energy sources identified for the RCSTS are recorded in Table 3-1 (and the definitions are shown in Table 3-2). These results reflect the energy sources present during routine operational activities.

3.3.2.2 Hazard Classification. DOE 5480.23 requires the hazard classification of nuclear facilities and operations. Section 5.1, "Hazard Classification," of the BIO documents the hazard classification of TWRS facilities performed in accordance with DOE-STD-1027-92. Single-shell tanks, double-shell tanks, aging waste facility tanks, and associated waste transfer systems are designated as Hazard Category 2 facilities. The RCSTS is part of the waste transfer system within the TWRS facility. It is interconnected to existing TWRS facility equipment and is not an independent segment. In addition, the RCSTS brings no new material at risk to the TWRS facility. Therefore, the RCSTS is also classified as Hazard Category 2. (It should be noted that, per RL direction, the Hazard Classification of the TWRS facility was reevaluated during preparation of the Final Safety Analysis Report. This reevaluation concluded that Hazard Category 2 is the correct designation.)

3.3.2.3 Hazard Evaluation. The hazard evaluation activity for the RCSTS identified hazardous conditions with the potential for significant health, environmental, occupational, and radiation exposure consequences. All consequence and frequency assessments developed during hazard analysis activities are based on an assumed RCSTS configuration with no controls.

3.3.2.3.1 Accident Selection. As noted in Section 3.3.1.4 of this addendum, the initial list of bins was based on the list of candidate accidents developed for the BIO. Evaluation of the individual RCSTS hazards identified no unique hazards that would result in the establishment of any additional accident bins. This initial set of candidate accidents represents all the S3 (offsite) and S2 (onsite) hazardous conditions that were selected for the TWRS facility in the BIO. These accidents are shown in Table 3-3.

Out of a total of 29 candidate accidents identified in the BIO, 13 accidents and one natural phenomena bin were used in the binning process for the RCSTS hazardous conditions. A list of the hazardous conditions represented for each of the 13 accidents is shown in Table B-1, while the list of binned RCSTS hazardous conditions is provided in Table B-2, which also includes the natural phenomena bin. Of the 13 accidents, six accidents were reanalyzed to account for the differences in the event scenario unique to the RCSTS. This final set of accidents, representing all S3 (offsite) and S2 (onsite) hazardous conditions that needed to be reanalyzed for the RCSTS, is shown in Table 3-4. A description of the reanalyzed accident scenarios and how the scenario differs from the original BIO scenario is provided in Section 3.4.

3.3.2.3.2 Defense-in-Depth. The hazardous conditions identified for the RCSTS are shown in Appendix C of this addendum and are arranged according to consequence category (i.e., S3, S2, S1, etc.). Where applicable, Defense-in-Depth controls have been allocated to hazardous conditions with potential S3, S2, E3, and E2 consequences. In addition, Defense-in-Depth controls have been allocated to the hazardous conditions with significant facility worker consequences (F3/S1). The control allocation tables are shown in Appendix D of this addendum.

Protection Against Offsite Consequences. The controls identified for the reanalyzed accidents with potential offsite consequences are described in Section 3.4 of this addendum. These descriptions also include a discussion of accident consequences and frequency.

Protection Against Onsite Consequences. The controls identified for the reanalyzed accidents with potential onsite consequences are described in Section 3.4. These descriptions also include a discussion of accident consequences and frequency.

3.3.2.3.3 Facility Worker Protection. In the course of the RCSTS hazard analysis process, a number of potential hazardous conditions only affecting the facility worker were identified. These hazardous conditions were divided into three categories: uncontrolled releases of radioactive or hazardous material, operational radiation and hazardous material protection concerns, and occupational safety concerns.

Protection Against Uncontrolled Releases. From the hazard analysis database a list of anticipated hazardous conditions resulting in only facility worker effects from releases was developed (i.e., F3, S1 hazardous conditions with no controls). The hazardous conditions were reviewed to determine if they represented the potential for serious injury or death to the facility worker. For those hazardous conditions, Safety-Significant SSCs and TSRs were developed. Appendix D lists the anticipated hazardous conditions affecting the facility worker along with the applicable SSCs and TSRs.

Operational Radiation and Hazardous Material Protection. The hazard evaluation for the RCSTS identified a number of potential facility worker radiation exposure concerns. Although identification of potential facility worker radiation exposure and hazardous material concerns was not the specific focus of the hazards evaluation, the exposure concerns are recorded in Appendix C, Table C-5 of this addendum.

Occupational Safety. The hazard evaluation for the RCSTS identified a number of potential facility worker occupational safety concerns. Potential facility worker occupational safety hazardous conditions are recorded in Appendix C, Table C-6 of this addendum. These occupational hazards associated with the RCSTS are typical of those associated with other waste transfer systems in the TWRS facility. Industrial safety is implemented through HNF-SD-WM-HSP-002, *Tank Farms Health and Safety Plan*, which establishes procedures and provides general guidelines to minimize health and safety risks to facility workers.

3.3.2.3.4 Environmental Protection. The hazard analysis identified hazardous conditions with significant environmental (E3 or E2) consequences. These hazardous conditions are recorded in Appendix C, Table C-4 of this addendum. For most of these hazardous conditions, the controls to protect the public, onsite worker, and facility worker also provide for protection of the environment. A listing of the hazardous conditions with significant environmental consequences (E3 and E2) and applicable SSCs and TSRs is provided in Appendix D of this addendum.

Table 3-1. RCSTS Hazards Identification.[a]

Energy Classification[b]	RCSTS	
	PF	PE
Corrosive	2	N/A
Explosive/pyrophoric	6,7,8,10	N/A
Nuclear criticality	N/A	N/A
Flammable materials	11,13,14	3,7
Thermal radiation	N/A	N/A
Chemical reactions	1	N/A
Friction	N/A	N/A
Electrical	3,4,5,9,10	N/A
Kinetic-rotational	2,3	N/A
Kinetic-linear	N/A	1,4,5
Mass, gravity, height	2,3,11,13,14,16	5
Pressure-volume	7,9,11	N/A
Thermal (except radiant)	N/A	N/A

[a]The hazards identification represents the hazards that could potentially cause an uncontrolled release of radioactive or hazardous materials only. Hazards only resulting in personnel injury are not included.
[b]See Table 3-2 for the specific energy classifications represented by the numeric designators.
N/A = not applicable.
PE = potentially present elsewhere in/adjacent to facility.
PF = potentially present in the facility.

Table 3-2. Hazard Identification Checklist and Energy Designators.

A Corrosive
1 Acids
2 Caustic
3 Natural chemicals
4 Decon solution
5 High temperature waste
6 Other

B Explosive/Pyrophoric
1 Caps
2 Primer cord
3 Dynamite
4 Scrub chemicals
5 Dusts
6 Hydrogen
7 Gases, other
8 Nitrates
9 Peroxides-superoxides
10 Pu and U metal
11 Other

C Nuclear Criticality
1 Vaults
2 Temporary storage areas
3 Shipping and receiving areas
4 Filters
5 Casks
6 Burial ground
7 Storage racks
8 Canals and basins
9 Decon solution
10 Trucks, forklifts, dollies
11 Hand carry
12 Cranes/lifts
13 Hot cells, assembly, inspection
14 Laboratories
15 Tanks
16 Other

D Flammable Materials
1 Packing materials
2 Rags
3 Gasoline
4 Lube oil
5 Coolant oil
6 Paint solvent
7 Diesel fuel
8 Buildings and contents
9 Trailers and contents
10 Grease
11 Hydrogen
12 Nitric acid
13 Organics
14 Gases-other
15 Liquids-other
16 Sodium
17 Other

E Thermal Radiation
1 Furnaces and boilers
2 Steam liners
3 Lab equipment
4 Solar
5 Other

F Chemical Reactions
1 Uncontrolled chemical reactions
2 Other

G Friction
1 Belts
2 Bearings
3 Fans
4 Gears
5 Motors
6 Power tools
7 Other
8 All

H Electrical
1 Battery banks
2 Diesel units
3 Transformers
4 Wiring
5 Switchgear
6 Underground wiring
7 Cable runs
8 Service outlets/fittings
9 Pumps
10 Motors
11 Heaters
12 Power tools
13 Small equipment
14 Electrical equipment
15 Hot plates
16 High voltage
17 Locomotive, electrical
18 Transmission lines
19 Other

I Kinetic-Rotational
1 Centrifuges
2 Motors
3 Pumps
4 Fans
5 Laundry equipment
6 Shop equipment
7 Other

J Kinetic-Linear
1 Cars, trucks, buses
2 Forklifts, dollies, carts
3 Railroad
4 Obstructions
5 Crane loads
6 Pressure vessel blowdown
7 Other

K Mass, Gravity, Height
1 Human effort
2 Stairs
3 Lifts and cranes
4 Bucket and ladder
5 Trucks
6 Slings
7 Hoists
8 Elevators
9 Jacks
10 Scaffold and ladders
11 Pits
12 Elevated doors
13 Vessels
14 Vaults
15 Excavations
16 Raw water lines
17 Other

L Pressure-Volume
1 Boilers
2 Surge tanks
3 Autoclave
4 Test Loops
5 Gas bottles
6 Pressure vessels
7 Stressed members
8 Gas receivers
9 Negative pressure collapse
10 Steam headers and lines
11 Positive pressure release
12 Other

M Thermal (except radiant)
1 Convective
2 Exposed components
3 Heaters
5 Fire boxes
6 Electric wiring, equip
7 Furnaces
8 Steam lines
9 Welding torch
10 Other

Table 3-3. Accidents Analyzed and Comparison of RCSTS to TWRS BIO Accident Analysis. (2 sheets)

Number	BIO Accidents	Section	BIO Section	RCSTS Comparison
1	Nuclear Criticality	3.4.2.1	5.3.2.1	Reanalyzed for RCSTS
2	HEPA Filter Failure - Exposure to High Temperature or Pressure	3.4.2.2	5.3.2.2	Covered by BIO
3	Fire in Contaminated Area	3.4.2.3	5.3.2.3	Covered by BIO
4	Evaporator Dump	3.4.2.4	5.3.2.4	Not applicable
5	Steam Intrusion from Interfacing Systems	3.4.2.5	5.3.2.5	Not applicable
6	Leak from Railcar/Tank Trailer	3.4.2.6	5.3.2.6	Not applicable
7	Subsurface Leak Remaining Subsurface	3.4.2.7	5.3.2.7	Reanalyzed for RCSTS
8	Unplanned Excavation/Drilling in Pond/Ditch/Crib	3.4.2.8	5.3.2.8	Not applicable
9	Caustic Spray Leak	3.4.2.9	5.3.2.9	Covered by BIO
10	Sodium Fire	3.4.2.10	5.3.2.10	Not applicable
11	Mixing of Incompatible Material - Toxic Vapor Generation	3.4.2.11	5.3.2.11	Covered by BIO
12	Mixing of Incompatible Material - Tank Pressurization	3.4.2.12	5.3.2.12	Covered by BIO
13	Tank Failures Due to Excessive Loads	3.4.2.13	5.3.2.13	Not applicable
14	Flammable Gas Deflagrations	3.4.2.14	5.3.2.14	Covered by BIO
15	Organic Solvent Fire	3.4.2.15	5.3.2.15	Covered by BIO
16	In-Tank Fuel Fire/Deflagration	3.4.2.16	5.3.2.16	Covered by BIO
17	Organic Salt-Nitrate Reaction	3.4.2.17	5.3.2.17	Not applicable
18	Surface Leak Resulting in Pool	3.4.2.18	5.3.2.18	Reanalyzed for RCSTS
19	Subsurface Leak Resulting in Pool	3.4.2.19	5.3.2.19	Reanalyzed for RCSTS

Table 3-3. Accidents Analyzed and Comparison of RCSTS to TWRS BIO Accident Analysis. (2 sheets)

Number	BIO Accidents	Section	BIO Section	RCSTS Comparison
20	Spray Leak in Structure or from Overground Waste Transfer Lines	3.4.2.20	5.3.2.20	Reanalyzed for RCSTS
21	Spray Leak from Underground Waste Transfer Lines	3.4.2.21	5.3.2.21	Reanalyzed for RCSTS
22	Tank Bump	3.4.2.22	5.3.2.22	Not applicable
23	Natural Phenomena- High Wind	3.4.2.23	5.3.2.23.1a 5.3.2.23.1b 5.3.2.23.1c	Covered by BIO
23	Natural Phenomena - Lightning	3.4.2.23	5.3.2.23.2	Covered by BIO
23	Natural Phenomena - Seismic	3.4.2.23	5.3.2.23.3	Covered by BIO

Table 3-4. BIO Accidents Reanalyzed for RCSTS.

BIO Number	Reanalyzed Accident	Addendum Section
1	Nuclear Criticality	3.4.2.1
7	Subsurface Leak Remaining Subsurface	3.4.2.7
18	Surface Leak Resulting in Pool	3.4.2.18
19	Subsurface Leak Resulting in Pool	3.4.2.19
20	Spray Leak in Structure or from Overground Waste Transfer Lines	3.4.2.20
21	Spray Leak From Underground Waste Transfer Lines	3.4.2.21

3.4 ACCIDENT ANALYSIS

3.4.1 Methodology

Six accidents previously analyzed in the BIO (nuclear criticality, subsurface leak remaining subsurface, surface leak resulting in pool, subsurface leak resulting in pool, spray leak in structure or from overground waste transfer lines, and spray leak from underground waste transfer lines) were reanalyzed for the RCSTS to determine whether the BIO analysis is bounding. These accidents were reanalyzed because parameters such as temperatures, pressures, flows, and component dimensions are different for the RCSTS and may therefore affect the BIO analysis results. The accident analysis methodology for reevaluation of these accidents is the same as that described in Section 5.3, "Accident Analysis," of the BIO. It should be noted that, because of the differences in design, some assumptions used in the analysis of the RCSTS are different from those used in the analysis of transfer systems in the BIO. However, these assumptions did not involve the overall analysis methodology (i.e., radiological and toxicological consequence calculation methodology and the basis for estimating frequency), which remained consistent with the BIO methodology. Analysis results are reported in the following sections and the supporting calculations are documented in HNF-2542, *Revised Spray Leak Calculations for Project W-058*.

3.4.2 Accident Analysis Scenarios

This section provides the analysis for the six accidents (nuclear criticality, subsurface leak remaining subsurface, surface leak resulting in pool, subsurface leak resulting in pool, spray leak in structure or from overground waste transfer lines, and spray leak from underground waste transfer lines) that need to be revisited for the RCSTS. To provide a complete picture of how the RCSTS relates to the other accident scenarios, all other BIO accident scenarios are discussed with a focus on any interfaces with the RCSTS.

The six reanalyzed accidents are presented in the same format that was used in the BIO. However, only the new controls are shown in this Addendum. The existing controls that remain applicable are provided by reference to the BIO.

It is important to note that the analysis addressing State Highway 240 transient populations and the control strategy for potential misrouting of waste transfers, that is outlined at the beginning of BIO Section 5.3.2, "Accident Analysis Scenarios," is also applicable to the RCSTS analysis. To support the BIO, an analysis of potential consequences to transient populations on State Highway 240 was performed for four bounding accidents

(including the spray leak) and is documented in HNF-SD-TWR-TI-002, *Analysis of Consequences at State Route 240 from Postulated Accidents at Tank Waste Remediation System Facilities to Support Development of Emergency Response Plans*. Both the radiological and toxicological doses for the spray leak accident (the worst-case transfer accident) were below the evaluation guidelines. (It should be noted that the organic salt-nitrate reaction produced results that were above the risk guidelines, but this is a waste tank accident and is not applicable to waste transfer systems.)

It is also important to note that plugging of the transfer lines (deemed to be highly improbable based on the system design) is an availability and operational concern, but not a safety concern (i.e., it will not cause a waste release nor would it worsen the consequences of the leak and spray accidents already evaluated).

3.4.2.1 Nuclear Criticality. Nuclear criticality is reevaluated for the RCSTS, not because of any criticality concern within the transfer line itself, but because of the potential transfer of solids (containing plutonium) between waste tanks. The background of the nuclear criticality analysis is described below.

The BIO evaluated the potential for nuclear criticality and concluded that no credible scenario has been identified that leads to a criticality in a double-contained receiver tank (DCRT), DST, or SST, according to the existing inventory of plutonium that is in the tank farms. For information purposes, an analysis was done in the BIO to quantify the consequences of a criticality event initiated by the hypothetical transfer of a large volume of new waste containing a high plutonium concentration. The described scenario assumes 500 L (130 gal) of solution with a concentration of 10 g Pu/L is transferred to the tank farm. The waste is assumed to form a compact sphere in the tank which expands until a criticality occurs. The criticality is modeled as a single burst and produces a pressure increase in the headspace leading to a release of material.

The RCSTS does not affect this scenario since the criticality is assumed to occur in the tank. In addition, a criticality in a 76-mm (3-in.) line is a practical impossibility since concentrations approaching that of pure Pu metal are needed to produce a criticality in an infinite 3-in. cylinder. This is a safe geometry, i.e., a criticality cannot occur in the solutions that are pumped.

However, a waste leak to the soil from the RCSTS is a potential criticality concern, since the leak could result in an accumulation of fissile material in a non-criticality safe geometry. Evaluations of the criticality safety implications of supernate leaking into the ground are documented in WHC-SD-SQA-CSA-20356, *CSER 92-009: An Analytical Model for Evaluating Subcritical Limits for Waste In Hanford Site Storage Tanks*, WHC-SD-SQA-CSA-20363, *CSER 94-001: Criticality Safety of Single-Shell Waste Storage Tanks*, and WHC-SD-SQA-CSA-20368, *CSER 94-004: Criticality Safety of Double-Shell Waste Storage Tanks*. A leak to the soil could result in the filtering and trapping of plutonium in the soil. A model of plutonium in the soil was created (the soil was modelled as SiO_2). The analysis concluded a

criticality would not occur because the solids contain a sufficient ratio of neutron absorbers to prevent criticality. Even if the absorbers were removed, a criticality would not occur because of the large quantity of plutonium required.

The final item to be evaluated for the RCSTS is the interface between the sending and receiving tanks. The RCSTS has the capability to transfer solutions with up to a 30 vol% solids content (while the BIO only considered supernate transfers for criticality). It is possible that the plutonium concentration in the solids transferred through the RCSTS may exceed the discharge limits in the receiver DST if the solids content is actually 30 vol%. Therefore, an additional control is necessary to ensure that transfers involving waste solids are evaluated, prior to commencing the transfer.

3.4.2.1.1 Controls. An additional control is added to the Administrative Control on nuclear criticality safety. Prior to any slurry transfers with waste tank solids through the RCSTS, a Criticality Safety Evaluation Report will be issued which addresses the suspension of solids in the sending tank and particle segregation after settling in the sending and receiving tanks.

The other criticality controls listed in the BIO are still applicable.

3.4.2.2 HEPA Filter Failure - Exposure to High Temperature or Pressure. Potential releases from HEPA filter failure are evaluated in the BIO. Fire is determined to be the bounding initiator. The heat from a fire in close proximity to a ventilation system degrades the HEPA filter and causes a release of a portion of the waste that has accumulated on the filter. In addition, the failed filter is assumed to provide an unfiltered release pathway that continues to operate for up to one year. Waste tanks with active ventilation systems produce the bounding consequences. The RCSTS diversion box 6241-A and vent station 6241-V are passively ventilated structures (whose atmospheres should be essentially uncontaminated except under spray or pool leak accident conditions) and thus are bounded by the BIO results.

A pressure differential of 2.5 kPa (0.4 psig) can fail HEPA filters. The only events identified in the BIO, that are capable of generating pressures in excess of 2.5 kPa (0.4 psig), occur in waste tanks and thus are bounding for the RCSTS.

The controls identified in the BIO for HEPA filters (i.e., periodic radiation monitoring of HEPA filter loading and HEPA filter change-out criteria) are applicable to the RCSTS. (However, for the RCSTS, these controls are based on the surface leak resulting in pool accident analyzed in Section 3.4.2.18 and the spray leak accident analyzed in Section 3.4.2.20.) No additional controls are required.

3.4.2.3 Fire In Contaminated Area. There are numerous contaminated areas associated with waste transfer systems that are routinely accessed, such as valve pits, pump pits, and diversion boxes. In the scenario analyzed in the BIO, fuel from a crane gas tank is spilled into a contaminated (and open) valve pit, where it catches fire. The analysis without controls showed that

controls are required to protect the onsite worker. To protect the onsite worker, an ignition control program has been established in the BIO Technical Safety Requirements (TSRs). These ignition controls are applicable to the RCSTS.

3.4.2.4 Evaporator Dump. This accident involves a loss of electrical power to the evaporator, which results in a discharge of the contents of the evaporator to a double-shell tank. This scenario is not applicable to the RCSTS. Therefore, no additional controls, beyond those listed in the BIO, are required.

3.4.2.5 Steam Intrusion from Interfacing Systems. This accident involves steam jets that are used to transfer waste into the tank farms. As a result of operator error, steam is routed to the headspace of a waste tank, which results in a pressure increase and HEPA filter failure. This scenario does not involve the RCSTS. Therefore, no additional controls, beyond those listed in the BIO, are required.

3.4.2.6 Leak from Railcar/Tank Trailer. This scenario evaluates the effects of a railcar breach, as the railcar is about to enter the 204-AR Waste Unloading Facility. This scenario is not applicable to the RCSTS. Therefore, no additional controls, beyond those listed in the BIO, are required.

3.4.2.7 Subsurface Leak Remaining Subsurface for the RCSTS.

Purpose of Analysis: The purpose of this analysis is to evaluate the risks associated with a potential leak of waste to the soil that remains subsurface.

Analysis Strategy: Subsurface leaks that remain subsurface are analyzed in the BIO for the TWRS waste transfer systems, but this analysis did not include the RCSTS, which was an ongoing project outside the original BIO scope. The BIO analysis considered both single-wall and encased line leaks. A leak from a single-walled direct-buried pipe was selected as the bounding accident. This scenario was considered bounding because the leak flows directly to the soil (i.e., there is no encasement) and the direct-buried pipe provides minimal soil shielding. Both these factors serve to maximize the radiological dose consequence. As also noted in the BIO, leaks from pipe encasements will tend to flow to process pits where the pit leak detectors will provide indication of a leak. The RCSTS is a pipe encased within a pipe system, which is continuously sloped (with vent station 6241-V representing the high point) to facilitate drainage of any primary pipe leak to a process pit. Therefore, the BIO analysis of subsurface leak that remains subsurface is bounding for the RCSTS.

3.4.2.7.1 Accident Scenario Assuming No Controls.

Sequence of Events. The bounding scenario for the subsurface leak remaining subsurface is described in Section 5.3.2.7.1, "Accident Analysis Assuming No Controls," of the BIO.

Results Summary. BIO Table 5.3.2.7-1, "Consequences of a Subsurface Leak Remaining Subsurface," presents the bounding onsite radiological consequences for the subsurface leak remaining subsurface accident assuming no controls. There are no offsite radiological nor any toxicological consequences for this accident, based on the distance to the site boundary and the fact the release remains below the soil surface.

Implication of Results. For the bounding accident, the onsite radiological consequences are below the risk guidelines. Therefore, no structures, systems, and components have been designated as Safety-Class or Safety-Significant for protection of the onsite and offsite receptor. However, controls have been established for protection of the facility worker.

3.4.2.7.2 Accident Scenario Assuming Controls. No accident scenarios assuming controls are postulated, because the radiological and toxicological consequences for the scenario without controls are below the risk guidelines.

3.4.2.7.3 Key Assumptions. Key assumptions are presented below.

Important to Accident Frequency. The accident assuming controls was not analyzed because the consequences with no controls were below the risk guidelines.

Important to Accident Consequences. The assumptions that are important to the calculation of accident consequences are described in Section 5.3.2.7.3, "Key Accident Scenario Assumptions," of the BIO.

3.4.2.7.4 Controls. The existing controls listed in the BIO are applicable to pipe-in-pipe encased lines and waste transfer-associated structures and thus are also applicable to the RCSTS.

Safety Structures, Systems, and Components. There are no additional Safety-Class or Safety-Significant structures, systems, and components selected for the RCSTS. Table 5.3.2.7-2, "Items Determined to be Safety-Significant by Extrapolating the Subsurface Leak Remaining Subsurface Accident Scenario to Other Applicable Tank Farm Transfer Equipment and Locations," in the BIO lists the Safety-Significant structures, systems, and components selected to prevent or mitigate the risk of subsurface leaks that remain subsurface. The Safety-Significant designation of the waste transfer pipe-in-pipe encasement, transfer leak detection systems, and tank level detection systems, identified in the BIO, are provided to protect the facility worker and are applicable to the RCSTS.

Technical Safety Requirements. There are no additional TSRs selected for the RCSTS. Table 5.3.2.7-3, "Technical Safety Requirement Controls for Subsurface Leaks Remaining Subsurface," in the BIO lists the TSRs selected to prevent or mitigate the risk of subsurface leaks that remain subsurface. These TSRs (regarding the transfer control program, transfer leak detection systems, and transfer pump administrative lock controls) identified in the BIO are applicable to the RCSTS.

Defense-in-Depth. There are no additional Defense-in-Depth controls identified for the RCSTS. The existing Defense-in-Depth controls identified in BIO Table 5.3.2.7-4 are applicable to the RCSTS.

3.4.2.8 Unplanned Excavation/Drilling in "Cribs, Ditches, and Ponds." This accident considers inadvertent excavation in a crib, ditch, or pond that contains a large quantity of contaminated soil. This accident does not involve the RCSTS. Therefore, no additional controls, beyond those listed in the BIO, are required.

Excavations that result in breaches of waste transfer lines (including the RCSTS) are addressed in Section 3.4.2.21.

3.4.2.9 Caustic Spray Leak. This accident involves a spray release of sodium hydroxide from a 1-inch Schedule 10 commercial steel pipe while the solution is being transferred to a waste tank. The RCSTS itself will not be used as a means for caustic addition to tanks. However, sodium hydroxide may be added to the flush tank that is interconnected to the RCSTS. Since the bounding accident (i.e., worst-case concentration and lightest piping used for transferring sodium hydroxide) has already been considered in the BIO, no additional analysis is required for the RCSTS and no additional controls, beyond those listed in the BIO, are required.

3.4.2.10 Sodium Fire. The 2727-W Sodium Storage Facility contains five tanks that are filled with solid sodium. The evaluated accident is initiated by high winds, that damage the building, and are followed by heavy rain that causes a sodium-water reaction followed by a fire. This accident is specific to the 2727-W Building and does not involve the RCSTS. Therefore, no additional controls, beyond those listed in the BIO, are required.

3.4.2.11 Mixing of Incompatible Material - Toxic Vapor Generation. The bounding scenario assumes a rapid uncontrolled addition of caustic to a double-contained receiver tank which increases the pH level and ultimately results in the release of ammonia. The analysis applies to DCRTs, DSTs, and SSTs. The BIO analysis does not include waste transfer systems, because caustic additions are typically done locally and not through waste transfer systems. Therefore, the existing BIO analysis is adequate for the RCSTS and no additional controls, beyond those listed in the BIO, are required.

3.4.2.12 Mixing of Incompatible Material - Tank Pressurization. This scenario assumes that an uncontrolled mixture of incompatible materials in a waste tank results in a tank pressurization and an airborne release. The bounding accident is a mistransfer of 416 L (110 gal) of 57% nitric acid from B-Plant to DCRT. The presence of the RCSTS has no impact on this bounding source term or accident scenario. Thus, the existing BIO analysis is adequate for the RCSTS. Transfer controls to ensure waste compatibility are established in the BIO. These controls are applicable to the RCSTS and no additional controls are required.

3.4.2.13 Tank Failure Due to Excessive Loads. This scenario involves tank failure caused by a load drop event. This accident is specific to waste tanks and is not applicable to the RCSTS. Therefore, no additional controls, beyond those listed in the BIO, are required.

3.4.2.14 Flammable Gas Deflagrations. The flammable gas hazard poses an Unreviewed Safety Question (USQ) originally identified in 1990. This USQ was expanded to include steady state accumulation as well as gas release event phenomena (Wagoner 1996, Contract Number DE-AC06-96RL13200; *The U.S. Department of Energy [DOE], Richland Operations Office [RL], Definition and Declaration of Flammable Gas Unreviewed Safety Question [USQ]*). The scope of the flammable gas USQ was also expanded to include miscellaneous transfer system components (e.g., transfer lines, valve pits, diversion boxes, process pits, and transfer line clean out boxes). The flammable gas USQ remains open for the miscellaneous transfer system components (TF-96-0433, *Consolidation of Flammable Gas/Slurry Growth Unreviewed Safety Question Issues*). This USQ is also applicable to the RCSTS. (It should also be noted that the BIO evaluates flammable gas deflagrations in waste tanks and these results are bounding for waste transfer systems such as the RCSTS.)

On November 1, 1996, RL issued authorization for continued operation of the Hanford Tank Farms (Wagoner 1996) for an interim period. This interim period ended with the approval of the operating contractor's Justification for Continued Operation, which now allows for continued operation. The JCO is incorporated into the BIO as Appendix E, "Flammable Gas/Slurry Growth Unreviewed Safety Question: Justification for Continued Operation for the Tank Farms at the Hanford Site."

Detailed quantitative analysis of the frequencies and consequences of flammable gas events in the RCSTS has not been performed. This is consistent with the open USQ (TF-96-0433) and the overall TWRS approach to the flammable gas issue. As noted in Section E5.4 of Appendix E of the BIO, the flammable gas control strategy for waste transfer systems is based on a qualitative evaluation that concludes that historical evidence exists that the risk posed by this hazard is low. Risk is reduced by flushing transfer lines after use. In addition, gas concentrations are monitored during entry to all vapor spaces, such as process pits, that might be connected to transfer lines. Gas monitoring verifies the risk is low. Flushing practices are required to be continued to maintain a low risk of flammable gas generation and accumulation. Lastly, RCSTS equipment is evaluated for compliance with Ignition Source Controls specific to the use and location of the equipment. It is judged that additional controls are not warranted at this time.

3.4.2.15 Organic Solvent Fire. Some waste tanks contain separable organic solvent phases. If ignited, the burning organic can liberate sufficient energy to release hazardous material from the tank. The oxygen in the tank is the limiting parameter for this scenario. It is important to note that there are no ignition sources in the pipes or structures unique to the RCSTS that are capable of igniting the solvent. In addition, there is not enough oxygen in the transfer pipes to support sustained combustion. The BIO analysis is therefore bounding.

3.4.2.15.1 Controls. A control is established in the BIO that requires all waste transfers to be evaluated to ensure the waste transfer does not create an organic solvent hazard in the receiving or delivering tank which is

outside the BIO safety envelope, i.e., the control prevents the creation of a new tank with an organic solvent hazard unless the required organic controls are extended to that tank. This control is applicable to the operation of the RCSTS.

3.4.2.16 In-Tank Fuel Fire/Deflagration. This scenario postulates that an errant motor vehicle shears off one or more tank risers and ruptures the vehicle fuel tank. This accident is specific to waste tanks and is not applicable to the RCSTS. Therefore, no additional controls, beyond those listed in the BIO, are required.

3.4.2.17 Organic Salt-Nitrate Reaction. Organic complexants were used during past Hanford operations and were discharged to the tank where they were mixed with sodium hydroxide, sodium nitrate, and other inorganic diluent already present in the tank. Organic complexants will react with these types of oxidizing materials. The reaction can be accelerated to a rapid combustion by heating to high temperatures by an initiator of sufficient energy. A combustion front would be generated by such a condition and would spread through the combustible waste releasing significant energy and gases.

This accident scenario is specific to waste tanks. Even with the highest solids content (30 vol%), the RCSTS poses no hazard of propagating combustion reactions (since the moisture content is much greater than the 20 wt% water needed to preclude combustion). The only potential concern would be if solids were allowed to accumulate and dry in the transfer lines. Solids accumulation is precluded by flushing the RCSTS after transfers are completed.

The scenario is also relevant to waste transfer systems insofar as they may be used for tank moisture removal or addition. (Moisture is a moderator for this type of reaction.) The BIO analysis states that the accident analysis and the specified controls are applicable to waste transfer lines. Therefore, the BIO control strategy is applicable to the RCSTS, and no additional controls, beyond those listed in the BIO, are required.

3.4.2.18 Surface Leak Resulting In Pool for the RCSTS.

Purpose of Analysis: A surface leak that occurs during a transfer through the RCSTS could form a pool. These waste pools are a safety concern because they can cause significant onsite and offsite inhalation doses and produce significant shine and skyshine doses to the onsite receptor.

Analysis Strategy: Surface leaks that result in pools have been analyzed in the BIO for existing transfer routes, but not the RCSTS which was an ongoing project outside the BIO scope. A misrouting of waste to a valve pit was analyzed as the bounding case in the BIO. The RCSTS adds two new structures, diversion box 6241-A and vent station 6241-V, that were not considered in the BIO analysis and are larger than existing waste transfer structures. (Note that the end points of the RCSTS, valve pits 241-SY-A and 241-SY-B in the 200 West Area and the 244-A lift station in the 200 East Area, are existing facilities for which the BIO analysis is bounding.) Thus, leaks were evaluated in the two RCSTS structures, with diversion box 6241-A providing the bounding case.

The scenario where an RCSTS subsurface leak washes away the soil and results in a surface pool is analyzed in Section 3.4.2.19 of this addendum.

3.4.2.18.1 Accident Scenario Assuming No Controls.

Sequence of Events. The RCSTS scenario postulates that the spill occurs in diversion box 6241-A. The spill is postulated to occur with the diversion box entry door and pipe penetrations open, so that no credit is taken for the HEPA filter. The event duration (12 hours) and receptor exposure times are the same as in the BIO (12 hours for the onsite receptor and 12 hours aerosol exposure for the offsite receptor). The event frequency is also the same (i.e., "anticipated").

The RCSTS scenario differs from the BIO scenario as follows. The leak rate is assumed to be the maximum RCSTS flow rate of 530 Lpm (140 gpm) versus the 1,130 Lpm (300 gpm) used in the BIO. Thus, maximum pool size is 381,600 L (100,800 gal) or 380 m^3, compared to 817,600 L (216,000 gal) in the BIO. Because the volume of the diversion box is 622 m^3 (21,960 ft^3), there will be no overflow. Splashing, however, is assumed to continue for the entire 12 hour period, unlike the valve pit scenario analyzed in the BIO, where splashing is assumed to stop after the pit is half full. Also, because only the supernate line, WT-SNL-3150 is authorized for operation, the spill is assumed to be aging waste supernate (5 vol% solids and 95 vol% liquids).

Results Summary. The onsite and offsite radiological and toxicological consequences for the RCSTS pool leak accident assuming no controls and the comparison to risk guidelines are shown in Table 3.4.2.18-1. Supporting calculations are documented in HNF-2542. It should be noted that the onsite dose is higher for the RCSTS accident than for the accident as analyzed in the BIO, because of the splashing that is assumed to occur for 12 hours (because of the large volume of the diversion box). The offsite dose is lower than the BIO analyzed accident, because (unlike the accident scenario analyzed in the BIO) there is no overflow.

Implication of Results. For the RCSTS pool leak accident, the onsite and offsite radiological and the onsite toxicological consequences exceed the risk guidelines. Therefore, controls are required.

3.4.2.18.2 Accident Scenario Assuming Controls. A suite of controls was selected for this accident in the BIO. Several additional controls were selected for the accident scenario as analyzed for the RCSTS. To maintain the validity of the analysis in the BIO for the piping downstream of the RCSTS, the pressure relief valve and rupture disk in lift station 244-A were elevated to Safety-Class status. (Note that the RCSTS is designed to withstand higher pressures than the existing piping to which it is connected.) This will preclude overpressurizing the downstream piping. A TSR control was selected to ensure that the doors and pipe penetrations (air sample line, exhauster hookup, liner washdown system, and emergency pumpout line) in diversion box 6241-A and vent station 6241-V are sealed during waste transfers to limit the release of unfiltered aerosols. A TSR control was also selected for the HEPA filter in diversion box 6241-A and vent station 6241-V to limit doses to the onsite receptor and facility worker.

Sequence of Events. The sequence of events for a pool leak in the RCSTS with controls is similar to that described in the BIO, except that the leak is assumed to occur in diversion box 6241-A, instead of a valve pit. As in the BIO, the maximum leak rate is assumed to be 1.3 L/s (20 gpm) and the leak detector in the diversion box is assumed to alarm after 51 mm (2 in.) of waste have accumulated. Flow is also assumed to occur for 30 minutes after the leak detector alarms to allow for operator response. The BIO assumptions on aerosols being generated from splatter and splashing while the pump is running and convection currents keeping some aerosols in suspension after the transfer pump is shut off are also retained in the RCSTS analysis. The entry door and pipe penetrations are assumed to be sealed and therefore the majority (90%) of the airborne release passes through a HEPA filter, which is credited with reducing the source term. The presence of the HEPA filter represents the major difference from the BIO (where the analyzed valve pit has no HEPA filter). Another BIO assumption that remains the same for the RCSTS is that the frequency of the event with controls is also assumed to be "anticipated."

The changes to the BIO sequence of events made for the RCSTS are as follows:

- The material spilled is aging waste supernate (5 vol% solids, 95 vol% liquids).
- The equipment leak occurs inside diversion box 6241-A with the entry door and pipe penetrations (air sample line, exhauster hookup, liner washdown system, and emergency pumpout line) assumed to be sealed.
- The amount of waste that is assumed to drain back through the leakage path after the pump is shut down is larger for the RCSTS. This maximum drain volume is 27.4 m^3 (968 ft^3) based on 5,730 m (18,800 ft) of 76-mm (3-in.) pipe.
- The majority (90%) of the airborne release is assumed to pass through a HEPA filter with a removal efficiency of 0.99. The remaining 10% of the airborne release is assumed to be unfiltered.

Results Summary. The radiological and toxicological consequences of the RCSTS accident assuming controls are presented in Table 3.4.2.18-2 and the associated calculations are documented in HNF-2542.

Implication of Results. The offsite and onsite radiological and toxicological consequences for the RCSTS surface leak resulting in pool accident, assuming controls, are below the risk guidelines.

3.4.2.18.3 Key Assumptions. Key assumptions are presented below.

Important to Accident Frequency. There are no key assumptions associated with the frequency of the RCSTS surface leak resulting in a pool accident.

Important to Accident Consequences. The BIO assumption that the operator shuts down the transfer pump 30 minutes after alarm actuation is also used in the RCSTS analysis. The important assumptions with an impact on consequences for the RCSTS, which differ from those used in the BIO, are as follows:

- The material spilled is aging waste supernate (5 vol% solids, 95 vol% liquids).
- The leak is assumed to occur in diversion box 6241-A, because this provides the bounding results for the two new waste transfer pits added by the RCSTS.
- The entry door is shut and the pipe penetrations (air sampling line, exhauster hookup, liner washdown system, and emergency pumpout line) are sealed.
- The majority (90%) of the airborne release passes through a HEPA filter with an assumed efficiency of 0.99. In addition, the HEPA filter is assumed to be radiologically clean, since it should only be exposed to radionuclides during accident conditions. The remaining 10% of the release is assumed to be unfiltered.
- The amount of waste that is assumed to drain back through the leakage path after the pump is shut down is larger for the RCSTS. This maximum drain volume is 27.4 m^3 (968 ft^3) based on 5,730 m (18,800 ft) of 76-mm (3-in) pipe.
- The pressure relief valve installed in the 244-A lift station precludes the RCSTS from overpressurizing the downstream piping. The pressure relief valve will lift at a preset pressure 1590 kPa (230 psig) that is equal to the maximum operating pressure of the existing downstream piping. This protects the analysis in the BIO, for surface leaks resulting in pool accidents, in equipment downstream of the RCSTS. It should also be noted that a rupture disk is located upstream of the relief valve (for As Low as Reasonably Achievable [ALARA] purposes, to allow testing and maintenance of the valve) and will rupture at a preset pressure to allow the relief valve to perform its safety function.

3.4.2.18.4 Controls. The following new controls are applicable to the RCSTS. It is important to note that these controls are an addition to the controls already listed in the BIO. These RCSTS controls have been added to the consolidated list of controls presented in Table 6-1, "Hazard and Accident Analyses; Safety Structures, Systems, Components and Technical Safety Requirement Cross Reference," of the BIO.

Safety Structures, Systems, and Components. Table 3.4.2.18-3 lists the new Safety-Class and Safety-Significant structures, systems, and components selected to prevent or mitigate the risk of RCSTS surface leaks resulting in a pool. These controls are unique to the RCSTS. The RCSTS pressure relief valve and rupture disk are only applicable to transfers through line WT-SLL-3160. Other Safety-Class and Safety-Significant structures, systems, and components are identified in BIO Table 5.3.2.18-3, "Safety

Structures, Systems, and Components for Surface Leak Resulting in Pool." The Safety-Class or Safety-Significant designations of the transfer leak detector and interlock to transfer pump(s) or alarm, the tank level detection systems, and the pressure switch with interlock to waste transfer pump or alarm (to prevent waste backflow to the flush system) are applicable to the RCSTS.

Technical Safety Requirements. Table 3.4.2.18-4 lists the new TSRs selected to prevent or mitigate the risk of RCSTS surface leaks resulting in a pool. These controls are unique to the RCSTS. The controls for the RCSTS pressure relief valve and rupture disk will be added to the TSR document after RL approval for transfers through WT-SLL-3160 is granted. Other TSRs are identified in BIO Table 5.3.2.18-4, "Technical Safety Requirement Controls for Surface Leak Resulting in Pool." The TSRs regarding the transfer pump administrative lock controls, the transfer leak detector and interlock to transfer pump(s) or alarm, the transfer control program, the pressure switch with interlock to waste transfer pump or alarm (to prevent waste backflow to the flush system), and the HEPA filter control program are applicable to the RCSTS.

Defense-in-Depth. There are no new Defense-in-Depth controls identified for the RCSTS. The existing Defense-in-Depth controls identified in BIO Table 5.3.2.18-5, "Defense-in-Depth Controls for Surface Leak Resulting in Pool," are applicable to the RCSTS.

Table 3.4.2.18-1. Consequences of RCSTS Surface Leak Resulting in Pool without Controls.

Receptor/Hazard	Calculated Dose	Evaluation guidelines "anticipated" frequency
Onsite radiological	2,400 mSv (240 rem)	5 mSv (0.5 rem)
Offsite radiological	3.1 mSv (0.31 rem)	1 mSv (0.1 rem)
Onsite Toxicological sum-of-fractions	3.7	1 (≤ERPG-1)
Offsite Toxicological sum-of-fractions	0.00061	1 (≤PEL-TWA)

Table 3.4.2.18-2. Consequences of RCSTS Surface Leak Resulting in Pool with Controls.

Receptor/Hazard	Calculated Dose	Evaluation guidelines "anticipated" frequency
Onsite radiological	1.9 mSv (0.19 rem)	5 mSv (0.5 rem)
Offsite radiological	3.6E-03 mSv (3.6E-04 rem)	1 mSv (0.1 rem)
Onsite Toxicological sum-of-fractions	7.3E-03	1 (≤ERPG-1)
Offsite Toxicological sum-of-fractions	1.2E-05	1 (≤PEL-TWA)

Table 3.4.2.18-3. New Safety Structures, Systems, and Components for RCSTS Surface Leaks Resulting in Pool.

Structure, Systems, or Components	SC	SS	Safety Function	Comments
Entry doors and penetrations for diversion box 6241-A and vent station 6241-V		X	Limit release of aerosols generated by splatter inside the structure	
HEPA filter in diversion box 6241-A and vent station 6241-V		X	Limit release of respirable aerosols by filtering	
RCSTS pressure relief valve and rupture disk	X		Precludes overpressurizing existing piping downstream of RCSTS	Protects BIO assumptions and analysis for existing piping

Note that these are the new safety SSCs that are unique to the RCSTS. All SSCs identified in BIO Table 5.3.2.18-3, "Safety Structures, Systems, and Components for Surface Leak Resulting in Pool," are still applicable.

Table 3.4.2.18-4. New Technical Safety Requirements Controls for RCSTS Surface Leaks Resulting in Pool. (2 sheets)

Control	Safety Function	Comments
Door and penetrations in diversion box 6241-A and vent station 6241-V	Ensure entry door is shut and air sampling line, exhauster hookup, liner washdown system, and emergency pumpout line are sealed during waste transfers	
RCSTS pressure relief valve and rupture disk	Ensure pressure relief valve and rupture disk are operable during transfers	Protects BIO assumptions and analysis for existing piping downstream of the RCSTS
HEPA Filter Control Program with the following key elements: • Periodic radiation survey to monitor HEPA filter loading • HEPA filter replacement per change-out criteria, i.e., ≤2 mSv/h (≤200 mrem/h) • Aerosol test upon installation • Periodic aerosol test	HEPA filter monitoring and replacement reduce consequences from a possible HEPA filter failure by limiting the inventory available for release Aerosol testing ensures filtering efficiency of HEPA filter	Applies to the inlet air HEPA filter system in diversion box 6241-A and vent station 6241-V

Note that these are the new TSRs that are unique to the RCSTS. All Technical Safety Requirement Controls listed in BIO Table 5.3.2.18-4, "Technical Safety Requirement Controls for Surface Leak Resulting in Pool," are still applicable. Also note that the HEPA filters listed in the preceding table are covered under the existing Administrative Control that requires periodic radiation surveillance and filter changeout with accumulations ≤200 mrem/h and verification of the nominal particulate removal efficiency (≥99.95%).

3.4.2.19 Subsurface Leak Resulting In Pool for the RCSTS.

Purpose of Analysis: Transfer line leaks at high flow rates that are in excess of the natural infiltration rate of the soil can result in surface pools of waste. These waste pools are a safety concern because they can cause significant onsite and offsite inhalation doses and produce significant shine and skyshine doses to the onsite receptor.

Analysis Strategy: Subsurface leaks that result in pools are analyzed in the BIO for the TWRS waste transfer systems, but this analysis did not include the RCSTS, which was an ongoing project outside the BIO scope. The three basic types of transfer lines considered in the BIO were unencased direct buried or bermed lines, buried concrete encased lines, and buried pipe-in-pipe lines. A subsurface leak from an unencased, bermed line was selected as the bounding accident in the BIO. The rationale for this is fourfold. First, unencased lines are older, in direct contact with the soil, and more prone to failure than the encased lines. Second, leaks into pipe encasements will tend to flow to process pits where the pit leak detectors will provide indication of a leak. Third, leaks from pipe encasements will be under low pressure and downward oriented, so that surface pools will be far less likely to form than in bermed unencased piping. Finally, the surface pools that can develop from washing out a berm are larger than pools than can develop as a result of leaks from buried lines. The RCSTS is a modern pipe encased within a pipe system, which is continuously sloped (with vent station 6241-V representing the high point) to facilitate drainage of any primary pipe leak to a process pit. (In addition, although it is not credited in the safety analysis, the RCSTS primary piping was designed to meet the criteria for a Safety-Class designation.) Therefore, the BIO analysis of subsurface leak resulting in a pool is bounding for the RCSTS.

The bounding scenario addresses transfer line leaks that are caused by internal initiators. Potential RCSTS leaks caused by excavation activities are addressed in Section 3.4.2.21, and potential RCSTS leaks caused by seismic events are addressed in Section 3.4.2.23.

3.4.2.19.1 Accident Scenario Assuming No Controls.

Sequence of Events. The bounding scenario for the subsurface leak resulting in a pool accident (without controls) is described in Section 5.3.2.19.1 of the BIO.

Results Summary. BIO Table 5.3.2.19-1, "Consequences of a Subsurface Leak Results in Pool Assuming No Controls," presents the bounding onsite and offsite radiological and toxicological consequences for the subsurface leak resulting in a pool accident assuming no controls.

Implication of Results. For the bounding accident, the onsite and offsite radiological consequences and the onsite toxicological consequences exceed the risk guidelines. Therefore, controls are required.

3.4.2.19.2 Accident Scenario Assuming Controls.

Sequence of Events. The leak from an unencased bermed line provides the bounding accident scenario with controls. This is based on the same arguments presented in the accident scenario without controls. These arguments are further buttressed by the Safety-Class designation applied to waste transfer pipe encasements and the fact that the RCSTS primary pipe is designed (although it is not credited in the analysis) to a Safety-Class designation.

The bounding scenario for the subsurface leak resulting in a pool accident (with controls) is described in Section 5.3.2.19.2, "Accident Scenario Assuming Controls," of the BIO.

Results Summary. The bounding onsite and offsite radiological and toxicological consequences for the subsurface leak resulting in a pool accident assuming controls are shown in BIO Table 5.3.2.19-2, "Consequences of a Subsurface Leak Resulting in Pool Assuming Controls."

Implication of Results. For the bounding accident, the onsite and offsite radiological and toxicological consequences satisfy the risk guidelines.

3.4.2.19.3 Key Assumptions. Key assumptions for the bounding accident are described in Section 5.3.2.19.3, "Key Assumptions," of the BIO. An additional assumption is made for the RCSTS, because of the potential pressure that may be achieved in the boosted line. The pressure relief valve installed in the 244-A lift station precludes the RCSTS from overpressurizing the downstream piping. The pressure relief valve will lift at a preset pressure (230 psig) that is equal to the maximum operating pressure of the existing downstream piping. This protects the analysis in the BIO, for subsurface leaks resulting in pool accidents, in equipment downstream of the RCSTS. It should also be noted that a rupture disk is located upstream of the relief valve (for ALARA purposes, to allow testing and maintenance of the valve) and will rupture at a preset pressure (1,590 kPa [230 psig]) to allow the relief valve to perform its safety function.

3.4.2.19.4 Controls. The following new controls are applicable to the RCSTS. It is important to note that these controls are an addition to the controls already listed in the BIO. These controls have been added to the consolidated list of controls presented in Table 6-1 of the BIO.

Safety Structures, Systems, and Components. Table 3.4.2.19-1 lists the new Safety-Class and Safety-Significant structures, systems, and components selected to prevent or mitigate the risk of RCSTS subsurface leaks resulting in pools. The listed SSCs are unique to the RCSTS. The RCSTS pressure relief valve and rupture disk are only applicable to transfers through line WT-SLL-3160. Other Safety-Class and Safety-Significant structures, systems, and components are identified in BIO Table 5.3.2.19-3, "Safety Structures, Systems, and Components for Subsurface Leak Resulting in Pool."

The Safety-Class designation of the waste transfer pipe-in-pipe encasement and Safety-Significant designation of the tank level detection systems are applicable to the RCSTS. (The RCSTS pit leak detectors have also been added to BIO Table 6-1 as a Safety-Class item, because the detectors work in tandem with the pipe encasement to detect leaks in the primary pipe and thereby limit the volume of the subsurface leak.)

Technical Safety Requirements. Table 3.4.2.19-2 lists the new TSRs selected to prevent or mitigate the risk of RCSTS subsurface leaks that result in pools. These controls are unique to the RCSTS. The controls for the RCSTS pressure relief valve and rupture disk will be added to the TSR document after RL approval for transfers through WT-SLL-3160 is granted. The TSRs identified in BIO Table 5.3.2.19-4, "Technical Safety Requirement Controls for Subsurface Leak Resulting in Pool," regarding the waste transfer control program and emergency response procedures are also applicable to the RCSTS. (The TSR control on the transfer leak detection system has also been added to BIO Table 6-1, because the detectors work in tandem with the pipe encasement to detect leaks in the primary pipe and thereby limit the volume of the subsurface leak.)

Defense-in-Depth. There are no new Defense-in-Depth controls identified for the RCSTS. The Defense-in-Depth control identified in BIO Table 5.3.2.19-5, "Defense-in-Depth Controls for Subsurface Leak Resulting in Pool," regarding encasement leak detectors is also applicable to the RCSTS.

Table 3.4.2.19-1. New Safety Structures, Systems, and Components for RCSTS Subsurface Leak Resulting in Pool.

Structure, Systems, or Components	SC	SS	Safety Function	Comments
RCSTS pressure relief valve and rupture disk	X		Precludes overpressurizing existing piping downstream of RCSTS	Protects BIO assumptions/ analysis for existing piping
Transfer leak detector and interlock to transfer pump(s) or alarm	X		Detect the presence of leaks in diversion box 6241-A or vent station 6241-V and to either provide an alarm to alert operators to take mitigative action, or provide an interlock to shut down transfer pump operation to limit the volume of the waste spilled to 6241-A or 6241-V	

Note that this is the new safety SSC that is unique to the RCSTS. All SSCs identified in BIO Table 5.3.2.19-3 are still applicable.

Table 3.4.2.19-2. New Technical Safety Requirements Controls for RCSTS Subsurface Leak Resulting in Pool.

Control	Safety Function	Comments
RCSTS pressure relief valve and rupture disk	Ensure pressure relief valve and rupture disk are operable during transfers	Protects BIO assumptions and analysis for existing piping downstream of the RCSTS
Transfer leak detection systems and interlock to transfer pump(s) or alarm	Ensure leak detectors and their interlocks or alarms are operable during transfers	

Note that this is the new TSR that is unique to the RCSTS. All Technical Safety Requirement Controls listed in BIO Table 5.3.2.19-4 are still applicable.

3.4.2.20 Spray Leak In the RCSTS.

Purpose of Analysis: A breach of containment during a transfer through the RCSTS could result in a pressurized spray release. These spray releases are a safety concern because, depending on the waste pressure and leak dimensions, they can be relatively efficient generators of respirable-sized aerosols.

Analysis Strategy: Spray leaks have been analyzed in the BIO for existing transfer routes, but not for the RCSTS, which was an ongoing project outside the BIO scope. A spray leak in a valve pit was analyzed as the bounding case in the BIO. The RCSTS adds two new structures, diversion box 6241-A and vent station 6241-V, that were not considered in the BIO analysis. (Note that the end points of the RCSTS, valve pits 241-SY-A and 241-SY-B in the 200 West Area and the 244-A lift station in the 200 East Area, are existing facilities for which the BIO analysis is bounding.) Thus, for the RCSTS, spray leaks were evaluated in the two RCSTS structures, with diversion box 6241-A providing the bounding case.

As noted in the BIO, spray leaks from underground transfer lines are mitigated by the soil cover. The scenario where a subsurface leak in the RCSTS washes away the soil and results in a surface pool is analyzed in Section 3.4.2.19 of this addendum. RCSTS spray leaks caused by excavation activities are addressed in Section 3.4.2.21, and RCSTS spray leaks caused by a seismic event are addressed in Section 3.4.2.23.

3.4.2.20.1 Accident Scenario Assuming No Controls.

Sequence of Events. The RCSTS spray leak accident scenario assumes that the spray leak develops in diversion box 6241-A as a result of a leak in the piping or a valve. The spray leak is postulated to occur with the diversion box entry door and pipe penetrations open, so that no credit is taken for the HEPA filter or the diversion box structure. The event duration (24 hours) and receptor exposure times are the same as in the BIO (24 hours for the offsite receptor and 12 hours for the onsite receptor.) The event frequency is also the same (i.e., "anticipated"). Because only the supernate line, WT-SNL-3150, is authorized for operation, the spill is assumed to be aging waste supernate (5 vol% solids and 95 vol% liquids).

Results Summary. The onsite and offsite radiological and toxicological consequences for the RCSTS spray leak accident assuming no controls and the comparison to risk guidelines are shown in Table 3.4.2.20-1. Supporting calculations are documented in HNF-2542.

Implication of Results. For the RCSTS spray leak, the onsite and offsite radiological and the onsite toxicological consequences exceed the risk guidelines. Therefore, controls are required.

3.4.2.20.2 Accident Scenario Assuming Controls

Sequence of Events. The sequence of events for a spray leak in the RCSTS with controls is similar to that described in the BIO, except that the leak is assumed to occur in diversion box 6241-A, instead of a valve pit. The entry doors and pipe penetrations (air sample line, exhauster hookup, liner washdown system, and emergency pumpout line) are credited with being sealed and therefore the majority (90%) of the airborne release passes through a HEPA filter, which is credited with reducing the source term. The presence of the HEPA filter represents a major difference from the BIO (where the analyzed valve pit has no HEPA filter). The other major difference is that the material spilled is aging waste supernate (5 vol% solids, 95 vol% liquids). There are two other BIO assumptions that remain the same for the RCSTS. The concentration of respirable-sized particles is assumed to be 100 mg/m^3 and the frequency of the event with controls is also assumed to be "anticipated."

Results Summary. The radiological and toxicological consequences of a spray leak in the RCSTS are presented in Table 3.4.2.20-2 and the associated calculations are documented in HNF-2542.

Implication of Results. The offsite and onsite radiological and toxicological consequences of the spray leak in the RCSTS assuming controls are below the risk guidelines. This represents a major difference from the spray leak analyzed for the valve pit in the BIO, where the onsite radiological consequences exceeded the risk guidelines. This difference can be attributed to the presence of the HEPA filter in diversion box 6241-A.

3.4.2.20.3 Key Assumptions. Key assumptions are presented below.

Important to Accident Frequency. There are no key assumptions associated with the frequency of the RCSTS spray leak.

Important to Accident Consequences. The important assumptions with an impact on consequences for the RCSTS, which differ from those used in the BIO, are as follows:

- The material spilled is aging waste supernate (5 vol% solids, 95 vol% liquids).
- For the scenario without controls, the RCSTS spray leak is assumed to occur at the maximum RCSTS pressure of 8,960 kPa (1,300 psig).
- The entry door and pipe penetrations (air sampling line, exhauster hookup, liner washdown system, and emergency pumpout line) in diversion box 6241-A are sealed.
- The majority (90%) of the airborne release passes through a HEPA filter with an assumed efficiency of 0.99. In addition, the HEPA filter is assumed to be radiologically clean, since it should only be exposed to radionuclides during accident conditions. The remaining 10% of the release is assumed to be unfiltered.

- The pressure relief valve installed in the 244-A lift station precludes the RCSTS from overpressurizing the downstream piping. The pressure relief valve will lift at a preset pressure (1590 kPa [230 psig]) that is equal to the maximum operating pressure of the existing downstream piping. This protects the analysis in the BIO, for spray leaks, in equipment downstream of the RCSTS. It should also be noted that a rupture disk is located upstream of the relief valve (for ALARA purposes, to allow testing and maintenance of the valve) and will rupture at a preset pressure to allow the relief valve to perform its safety function.

3.4.2.20.4 Controls. The following new controls are applicable to the RCSTS. It is important to note that these controls are an addition to the controls already listed in the BIO. These RCSTS controls have been added to the consolidated list of controls presented in Table 6-1 of the BIO.

Safety Structures, Systems, and Components. Table 3.4.2.20-3 lists the Safety-Class and Safety-Significant structures, systems, and components selected to prevent or mitigate the risk of RCSTS spray leaks. These SSCs are unique to the RCSTS. The RCSTS pressure relief valve and rupture disk are only applicable to transfers through line WT-SLL-3160. Other Safety-Class and Safety-Significant structures, systems, and components are identified in BIO Table 5.3.2.20-3, "Safety Structures, Systems, and Components for Spray Leaks." The Safety-Class designations for the pressure switch with interlock to waste transfer pump or alarm (to prevent waste backflow to the flush system) is applicable to the RCSTS.

Technical Safety Requirements. Table 3.4.2.20-4 lists the new TSRs selected to prevent or mitigate the risk of RCSTS spray leaks. These controls are unique to the RCSTS. The controls for the RCSTS pressure relief valve and rupture disk will be added to the TSR document after RL approval for transfers through WT-SLL-3160 is granted. Other TSRs are identified in BIO Table 5.3.2.20-4, "Technical Safety Requirement Controls for Spray Leaks." The TSRs regarding the transfer pump administrative lock controls, the transfer control program, the pressure switch with interlock to waste transfer pump or alarm (to prevent waste backflow to the flush system), and the HEPA filter control program are applicable to the RCSTS.

Defense-in-Depth. There are no new Defense-in-Depth controls identified for the RCSTS. The existing Defense-in-Depth controls identified for spray leaks in BIO Table 5.3.2.20-5, "Defense-in-Depth Controls for Transfer System Spray Leaks," are applicable to the RCSTS.

Table 3.4.2.20-1. Consequences of RCSTS Spray Leak without Controls.

Receptor/Hazard	Calculated dose	Evaluation guidelines "anticipated" frequency
Onsite radiological (RCSTS)	1.93E+02 Sv (1.93E+04 rem)	5 mSv (0.5 rem)
Offsite radiological (RCSTS)	0.27 Sv (27 rem)	1 mSv (0.1 rem)
Onsite Toxicological (RCSTS) sum-of-fractions	291	1 (≤ERPG-1)
Offsite Toxicological (RCSTS) sum-of-fractions	0.49	1 (≤PEL-TWA)

Table 3.4.2.20-2. Consequences of RCSTS Spray Leak with Controls.

Receptor/Hazard	Calculated dose	Evaluation guidelines "anticipated" frequency
Onsite radiological (RCSTS)	2.1 mSv (0.21 rem)	5 mSv (0.5 rem)
Offsite radiological (RCSTS)	1.84E-03 mSv (1.84E-04 rem)	1 mSv (0.1 rem)
Onsite toxicological (RCSTS) sum-of-fractions	2.4E-02	1 (≤ERPG-1)
Offsite toxicological (RCSTS) sum-of-fractions	4E-05	1 (≤PEL-TWA)

Table 3.4.2.20-3. New Safety Structures, Systems, and Components for RCSTS Spray Leaks.

Structure, Systems, or Components	SC	SS	Safety Function	Comments
Entry doors and pipe penetrations for diversion box 6241-A and vent station 6241-V	X		Limit release of aerosols generated by spray inside the structure	
HEPA filter in diversion box 6241-A and vent station 6241-V		X	Limit release of respirable aerosols by filtering	
RCSTS pressure relief valve and rupture disk	X		Precludes overpressurizing existing piping downstream of RCSTS	Protects BIO assumptions/ analysis for existing piping

Note that these are the new safety SSCs that are unique to the RCSTS. All SSCs identified in BIO Table 5.3.2.20-3 are still applicable.

Table 3.4.2.20-4. New Technical Safety Requirements Controls for RCSTS Spray Leaks.

Control	Safety Function	Comments
Door and penetrations in diversion box 6241-A and vent station 6241-V	Ensure entry door is shut and air sampling line, exhauster hookup, liner washdown system, and emergency pumpout line are sealed during waste transfers	
RCSTS pressure relief valve and rupture disk	Ensure pressure relief valve and rupture disk are operable during transfers	Protects BIO assumptions and analysis for existing piping downstream of the RCSTS
HEPA Filter Control Program with the following key elements: • Periodic radiation survey to monitor HEPA filter loading • HEPA filter replacement per change-out criteria, i.e., ≤2 mSv/h (≤200 mrem/h) • Aerosol test upon installation • Periodic aerosol test	HEPA filter monitoring and replacement reduce consequences from a possible HEPA filter failure by limiting the inventory available for release Aerosol testing ensures filtering efficiency of HEPA filter	Applies to the inlet air HEPA filter system in diversion box 6241-A and vent station 6241-V

Note that these are the new TSRs that are unique to the RCSTS. All Technical Safety Requirement Controls listed in BIO Table 5.3.2.20-4 are still applicable. Also note that the HEPA filters listed in the preceding table are covered under the existing Administrative Control that requires periodic radiation surveillance and filter changeout with accumulations ≤200 mrem/h and verification of the nominal particulate removal efficiency (≥99.95%).

3.4.2.21 Spray Leak From Underground Waste Transfer Lines (RCSTS).

Purpose of Analysis: A construction excavation accident could conceivably breach the RCSTS piping and cause a spray leak or a surface leak that results in a pool.

Analysis Strategy: Although this accident has a different initiator (i.e., excavation activities), the result will be either a surface leak or spray leak, which have been previously analyzed. The BIO analysis concludes that the calculations performed for spray leaks (assuming no controls) provide the bounding results for both spray leaks and surface leaks. This conclusion is also true for the RCSTS (i.e. the results reported in Section 3.4.2.20 are bounding).

3.4.2.21.1 Accident Scenario Assuming No Controls.

Sequence of Events. The BIO develops a scenario for various types of waste transfer piping including double-encased piping (similar to that used in the RCSTS). The sequence of events for the RCSTS is the same as that reported for other waste transfer systems in the BIO.

Results Summary. Because no credit was taken for the confinement of the spray within the RCSTS structure, the onsite and offsite radiological and toxicological consequences for the RCSTS excavation accident are bounded by the consequences calculated for the spray leak accident in Section 3.4.2.20.1.

Implication of Results. For the RCSTS spray leak, the onsite and offsite radiological and toxicological consequences exceed the risk guidelines. Therefore, controls are required.

3.4.2.21.2 Accident Scenario Assuming Controls.

Sequence of Events. Controls were selected to prevent the excavation accident by restricting and monitoring excavation activities in the vicinity of waste transfer lines. These controls, imposed in the BIO, are also applicable to the RCSTS. No additional controls are required.

3.4.2.21.3 Key Assumptions. The key assumptions documented in the BIO are applicable to the RCSTS. No additional assumptions are required.

3.4.2.21.4 Controls. The existing excavation controls listed in the BIO are applicable to the RCSTS. One additional Defense-in-Depth control is identified for the RCSTS.

Safety Structures, Systems, and Components. There are no Safety-Class and Safety-Significant structures, systems, and components required for this accident scenario in the BIO nor are any required for the RCSTS.

Technical Safety Requirements. Table 5.3.2.21-1, "Technical Safety Requirement Controls for Spray Leak and Surface Pools from Underground Waste Transfer Lines," in the BIO lists the TSRs selected to prevent leaks initiated by excavation activities. These TSRs identified in the BIO are applicable to the RCSTS.

Defense-in-Depth. The Defense-in-Depth controls identified in BIO Table 5.3.2.21-2, "Defense-in-Depth Controls for Spray Leak and Surface Pools from Underground Waste Transfer Lines," are applicable to the RCSTS. In addition, the magnetic warning tape that lies above the transfer lines (to warn of the underground piping and conduit) is also a Defense-in-Depth control for the RCSTS.

3.4.2.22 Tank Bump. Tank bumps occur when steam trapped in the waste causes a waste rollover and a rapid pressurization of the tank headspace. This accident is specific to waste tanks and is not applicable to the RCSTS. Therefore, no additional controls, beyond those listed in the BIO, are required.

3.4.2.23 Natural Phenomena. Natural phenomena analyzed in the BIO include high winds, lightning, and earthquakes. The BIO indicates that seismically induced spray leaks present the bounding natural phenomena accident for waste transfer systems. The BIO further indicates that no Safety-Class or Safety-Significant structures, systems, and components are associated with seismic protection. This statement also applies to the structures, systems, and components of the RCSTS (i.e., none are designated as Safety-Class or Safety-Significant for seismic protection). It should be noted, however, that diversion box 6241-A and vent station 6241-V were designed and constructed as Safety-Class (i.e., to withstand a 0.2 g earthquake), although this feature is not credited in the analysis. Administrative Emergency Preparedness controls mitigate the consequences of the seismic event by terminating waste transfers. These controls are listed in BIO Table 5.3.2.23.3-1, "Technical Safety Requirement Controls for Seismic Event," and are applicable to the RCSTS.

3.4.3 Beyond Design Basis Events

An analysis of Beyond Design Basis events, that includes all TWRS facility accidents and accident contributors, will be documented in the Final Safety Analysis Report.

This page intentionally left blank.

4.0 SAFETY STRUCTURES, SYSTEMS, AND COMPONENTS

The safety classifications for RCSTS structures, systems, and components (SSCs) are presented in the following sections. Safety classifications for TWRS facility SSCs are described in Section 2.1, "Structures, Systems, and Components Important to Safety," of the BIO.

4.1 INTRODUCTION

The controls selected for each accident are described in Chapter 3.0, "Safety Analysis." The selection process follows the SSC classification methodology described in WHC-CM-4-46*, *Nonreactor Facility Safety Analysis Manual*, and Dunford 1996, *Tank Waste Remediation System Final Safety Analysis Report Project Plan Comment Response; Risk-Based Approach*. In addition, the control decision criteria described in Chapter 5.4.1, "Control Decision Criteria," of the BIO are also followed.

The SSCs included in this report are divided into two categories, Safety-Class SSCs and Safety-Significant SSCs. Safety-Class SSCs prevent or mitigate releases to the public that would otherwise exceed the offsite radiological risk guidelines, or prevent a nuclear criticality. Those SSCs that support the safety function of a Safety-Class SSC are also Safety-Class SSCs.

Safety-Significant SSCs prevent or mitigate releases of radiological materials to onsite workers and toxic chemicals to the offsite public and onsite workers. Safety-Significant SSCs also include those safety SSCs that protect the facility worker from serious injury (or fatality) due to hazards not controlled by institutional safety programs. Those SSCs which support the safety function of a Safety-Significant SSC are also Safety-Significant SSCs.

It should be noted that some SSCs of the RCSTS are designated as Safety-Class for one accident and designated as Safety-Significant for a different accident. In conformance with Section 2.1 of the BIO, SSCs that serve more than one safety function are classified for the higher function.

4.2 REQUIREMENTS

DOE orders and standards that provide requirements and guidance for safety classification of SSCs are as follows:

- DOE 5480.23, *Nuclear Safety Analysis Reports*, Change 1 (1994)

---

*Refer to Appendix F, "Sitewide Controlled Manual Cross-Reference Table," of the BIO for cross-walk between Site-wide controlled manuals (e.g., WHC-CM-X-XXX) superseded by Fluor Daniel Hanford, Inc., procedures (e.g., HNF-PRO-XXX).

- DOE-STD-3009-94, *Preparation Guide for U.S. Department of Energy Nonreactor Nuclear Facility Safety Analysis Reports* (1994).

The design codes, standards, and regulations for the safety SSCs are defined in WHC-CM-4-46.

4.3 SAFETY-CLASS STRUCTURES, SYSTEMS, AND COMPONENTS

This section provides information about the Safety-Class SSCs identified in Chapter 3.0. Table 4-1 provides a summary list of those SSCs.

It is important to note that the 241-SY-A and 241-SY-B valve pits and the 244-A lift station, which are connected to the RCSTS, were evaluated within the scope of the BIO and therefore Safety-Class and Safety-Significant SSCs that are applicable only to these structures (and not diversion box 6241-A and vent station 6241-V) will not be discussed here, since they are already documented in the BIO.

4.3.1 Safety-Class SSCs

The following is a summary of SSCs that perform a Safety-Class function for the RCSTS. Safety-Class items that are unique to the RCSTS are described, as well as Safety-Class items that were previously identified in the BIO but are also applicable to the RCSTS.

The new Safety-Class SSCs identified for the RCSTS are the pressure relief valve and rupture disk, and the diversion box 6241-A and vent station 6241-V entry doors and pipe penetrations (air sampling line, exhauster hookup, liner washdown system, and emergency pumpout line). Safety-Class SSCs, previously identified in the BIO, that are also applicable to the RCSTS include waste transfer pipe encasements, pressure switch interlock(s) or alarm to waste transfer pumps (to prevent waste backflow into the flush line), and transfer leak detection systems.

4.3.1.1 Safety Function(s). The reanalyzed accidents in Sections 3.4.2.18, 3.4.2.19, and 3.4.2.20 identified new Safety-Class SSCs. The safety function of the SSCs are listed in Table 4-1.

4.3.1.2 System Descriptions. System descriptions of the Safety-Class SSCs are provided below. Additional descriptions are provided in Section 2.4.1.

4.3.1.2.1 Entry Door and Penetrations on Diversion Box 6241-A and Vent Station 6241-V. Entry doors, shielded by a labyrinth wall on the inside of the pit, allow pit access. In addition, pipes (that penetrate the walls) are provided for an air sample line, an air exhauster hookup, liner washdown system, and an emergency pumpout line on both RCSTS structures. The door is verified to be closed and the pipe penetrations sealed prior to commencing waste transfers. The safety function of the entry door and pipe penetrations (air sampling line, exhauster hookup, liner washdown system, and emergency pumpout line), credited in the spray leak in the RCSTS structures, is to provide a physical barrier in case of a spray release during a transfer.

4.3.1.2.2 RCSTS Pressure Relief Valve. Two pressure relief valves are located on the boosted line in the 244-A Lift Station. This provides protection from a single failure of a valve failing to lift. The valves are set to relieve at 1,590 kPa (230 psig). The safety function of the RCSTS pressure relief valve, credited in spray leak in structures or from overground lines, surface leak resulting in pool, and subsurface leak resulting in pool accident analyses, is to lift at a preset pressure that is equal to the maximum operating pressure of the existing downstream piping. This precludes overpressurizing the downstream piping connected to the RCSTS and thereby protects the existing accident analysis in the BIO. The rupture disk is located upstream of the relief valve and must rupture at a preset pressure to allow the relief valve to perform its safety function.

4.3.1.2.3 Rupture Disk. A rupture disk is installed upstream from (and in line with) each of the pressure relief valves noted above. Because the rupture disk isolates the pressure relief valve (for maintenance and testing purposes) it is also a Safety-Class item. The rupture disks must fail at the designated pressure of 1,590 kPa (230 psig) to preserve the Safety-Class function of the pressure relief valve.

4.3.1.2.4 Other RCSTS Safety-Class SSCs Identified in BIO. The following Safety-Class SSCs have been identified in the BIO (for other waste transfer systems) and are also applicable to the RCSTS.

- **Pressure Switch Interlock(s) or Alarm to Waste Transfer Pumps.** (Section 2.1.1.2, "Pressure Switch Interlock(s) or Alarm to Waste Transfer Pumps [Raw Water and Other Water Service Supply Lines] of the BIO.) The pressure switch, between the two valves in the 241-SY-A valve pit that serve to isolate the RCSTS from the interconnected flush system, is covered by this Safety-Class designation. During waste transfer operations the valves are closed to isolate the flush system from the transfer system. If waste leaks by the first valve during transfer operations, then the rise in pressure will be detected and an alarm will be actuated and the interlock will shut down the transfer pump. When the transfer system is being flushed, the pressure of the flush water is above the pressure switch setpoint thus ensuring that the transfer pump is in the shut down condition. The safety function of the pressure switch interlocks to waste transfer pumps, credited in the spray leak in structures and surface leak resulting in pool accident analyses, is to prevent backflow of waste into interconnecting systems.

- **Transfer Leak Detection Systems.** (Section 2.1.1.5, "Transfer Leak Detection System," of the BIO.) The RCSTS pit leak detectors are new SSCs for the subsurface leak resulting in pool accident. Leak detection conductivity probes are located at a low-point sump in the diversion box and vent station to provide an indication of a leak. The safety function of the transfer leak detection system, credited in the BIO for the surface leak resulting in pool accident and the RCSTS subsurface leak resulting in pool accident, is to detect waste accumulation in the pits (when 51 mm [2 in.] have accumulated) and provide a transfer pump auto stop or alarm function.

The RCSTS transfer leak detectors are described in Section 2.4.1.2 of this addendum.

- **Waste Transfer Pipe Encasements.** (Section 2.1.1.19, "Waste Transfer Pipe Encasement," of the BIO.) The safety function of the pipe encasements, credited in the subsurface leak resulting in pool accident, is to ensure that a leak in the primary waste transfer system piping is directed to a waste transfer-associated structure. This Safety-Class designation also applies to the RCSTS.

  The waste transfer pipe encasements are described in Section 2.4.1 of this addendum.

4.3.1.3 Functional Requirements. The functional requirements are listed in Table 4-1.

4.3.1.4 System Evaluation. The system evaluation for performance criteria for TSRs are listed in Table 4-1.

4.3.1.5 Controls (TSRs). The controls required to support the new Safety-Class SSCs for the RCSTS (i.e., entry doors and pipe penetrations on diversion box 6241-A and vent station 6241-V, pressure relief valves/rupture disks in the 244-A lift station, and transfer leak detection systems) have been added to Table 6-1 of the BIO, which shows the consolidated list of controls for the TWRS facility. Controls for the Safety-Class SSCs that are applicable to the RCSTS (but have already been identified for other waste transfer systems) are also shown in Table 6-1, "Hazard and Accident Analyses; Safety Structures, Systems, and Components; and Technical Safety Requirements Cross Reference," of the BIO.

4.4 SAFETY-SIGNIFICANT STRUCTURES, SYSTEMS, AND COMPONENTS

This section provides information about the Safety-Significant SSCs identified for the RCSTS in Chapter 3.0. Table 4-2 provide a summary list of those SSCs.

4.4.1 Safety-Significant SSCs

The following is a summary of SSCs that perform a Safety-Significant function for the RCSTS. Safety-Significant items that are unique to the RCSTS are described, as well as Safety-Significant items that were previously identified in the BIO but are also applicable to the RCSTS.

The new Safety-Significant SSCs identified for the RCSTS are the diversion box 6241-A and vent station 6241-V entry doors and pipe penetrations (air sampling line, exhauster hookup, liner washdown system, and emergency pumpout line) and the inlet HEPA filter unit on the diversion box and vent station. Safety-Significant SSCs, previously identified in the BIO, that are also applicable to the RCSTS include tank level monitors, waste transfer pipe encasements, and transfer leak detection.

4.4.1.1 Safety Function(s). The reanalyzed accidents in Sections 3.4.2.18, 3.4.2.19, and 3.4.2.20 identified new Safety-Significant SSCs. The safety functions of the SSCs are listed in Table 4-2.

4.4.1.2 System descriptions. System descriptions of the Safety-Significant SSCs are provided below. Additional descriptions are provided in Section 2.4.1.

4.4.1.2.1 Entry Door and Penetrations on Diversion Box 6241-A and Vent Station 6241-V. Entry doors, shielded by a labyrinth wall on the inside of the pit, allow pit access. In addition, pipes (that penetrate the walls) are provided for an air sample line, an air exhauster hookup, liner washdown system, and an emergency pumpout line on both RCSTS structures. The door is verified to be closed and the pipe penetrations sealed prior to commencing waste transfers. The safety function of the entry door and pipe penetrations (air sampling line, exhauster hookup, liner washdown system, and emergency pumpout line), credited in the surface leak resulting in pool accident analysis for the RCSTS, is to limit release of aerosols generated by splatter inside the structure.

4.4.1.2.2 High-Efficiency Air Filters on Diversion Box 6241-A and Vent Station 6241-V. The HEPA filter in the diversion box and vent station are credited with providing an efficiency of 0.99 in the analysis of pool leaks and spray leaks. The actual HEPA filter efficiency is 0.999, but because moisture can degrade filter performance, an efficiency of 0.99 is conservatively used in the analysis. The safety function of the HEPA filters, credited in spray leak in structures and surface leak resulting in pool accident analyses for the RCSTS, is to remove respirable airborne particulates from the airborne release and thereby reduce the inhalation dose to the onsite receptor and facility worker.

4.4.1.2.3 Other RCSTS Safety-Significant SSCs Identified in BIO. The following Safety-Significant SSCs have been identified in the BIO and are also applicable to the RCSTS.

- **Tank Level Monitors.** (Section 2.1.2.6, "Tank Level Monitors," of the BIO.) The safety function of the level monitors credited in the RCSTS subsurface leak remaining subsurface, subsurface leak resulting in pool, and surface leak resulting in pool accidents, is to indicate the waste level in the tank to support mass balance calculations during waste transfers.

  The waste tank level monitors are described in Section B2.4.11.2, "Liquid and Sludge-Level Monitoring Systems," of Appendix B of the BIO.

- **Waste Transfer Pipe Encasements.** (Section 2.1.2.10, "Waste Transfer Pipe Encasements," of the BIO.) The safety function of the pipe encasements credited in the subsurface leak remaining subsurface accident is to ensure that a leak in the primary waste transfer system piping is directed to a waste transfer-associated structure.

The waste transfer pipe encasements are described in Section 2.4.1. of this addendum.

- **Transfer Leak Detection Systems.** (Section 2.1.1.5, "Transfer Leak Detection System," of the BIO.) Leak detection conductivity probes are located at a low-point sump in the diversion box and vent station to provide an indication of a leak. The safety function of the transfer leak detection system, credited in the BIO for the subsurface leak remaining subsurface accident, is to detect waste accumulation in the pits (when 51 mm [2 in.] have accumulated) and provide a transfer pump auto stop or alarm function.

  The RCSTS transfer leak detectors are described in Section 2.4.1.2 of this addendum.

4.4.1.3 Functional Requirements. The functional requirements are listed in Table 4-2.

4.4.1.4 System Evaluation. The system evaluation for performance criteria for TSRs are listed in Table 4-2.

4.4.1.5 Controls (TSRs). The controls required to support the new Safety-Significant SSCs for the RCSTS (i.e., entry doors and penetrations on diversion box 6241-A and vent station 6241-V, and HEPA filters on the diversion box and vent station) have been added to Table 6-1 of the BIO which shows the consolidated list of controls for the TWRS facility. Controls for the Safety-Significant SSCs that are applicable to the RCSTS (but have already been identified for other waste transfer systems) are also shown in Table 6-1 of the BIO.

Table 4-1. New RCSTS Safety-Class Structures, Systems, and Components Summary. (3 sheets)

SSC	Accident(s)	Safety functions	Functional requirements	Performance criteria for TSRs
Diversion Box 6241-A and Vent Station 6241-V Entry Doors and Penetrations (4.3.1.2.1)	Spray Leak in Structure or from Overground Waste Transfer Lines (3.4.2.20)	The safety function of the diversion box and vent station entry doors and pipe penetrations is to provide a physical barrier in case of a spray leak during a transfer and thereby limit the release of aerosols and the subsequent dose to the offsite receptor.	The entry door and pipe penetrations must confine direct spray leaks to the inside of the structure. The entry door assemblies shall seal fit the structure, so that there are no paths for a direct spray leak or aerosol release to the atmosphere. The pipe penetrations must also be capable of being sealed during waste transfers.	The door assembly shall be visually inspected prior to a waste transfer to ensure that the door is closed and operable. The pipe penetrations for the air sampling line, exhauster hookup, liner washdown system, and emergency pumpout line are also verified to be flanged or capped prior to commencing waste transfers.
Pressure Relief Valve (4.3.1.2.2)	Surface Leak Resulting in Pool (3.4.2.18) Subsurface Leak Resulting in Pool (3.4.2.19) Spray Leak in Structure or from Overground Waste Transfer Lines (3.4.2.20)	The safety function of the pressure relief valve is to prevent overpressurization of the piping downstream from the RCSTS. This protects the assumptions used in the BIO accident analyses, which did not account for interfaces with the RCSTS.	The pressure relief valve shall relieve at a pressure of 1590 kPa (230 psig).	Prior to waste transfers (utilizing the booster pump), it shall be verified that the pressure relief valve has not relieved and is operable. It should be noted that this control is not required until transfers utilizing the booster pumps are initiated.

Table 4-1. New RCSTS Safety-Class Structures, Systems, and Components Summary. (3 sheets)

SSC	Accident(s)	Safety functions	Functional requirements	Performance criteria for TSRs
Rupture Disk (4.3.1.2.3)	Surface Leak Resulting in Pool (3.4.2.18) Subsurface Leak Resulting in Pool (3.4.2.19) Spray Leak in Structure or from Overground Waste Transfer Lines (3.4.2.20)	The safety function of the rupture disk is to fail and thereby allow the pressure relief valve to perform its Safety-Class function of preventing overpressurization of the piping downstream from the RCSTS.	The rupture disk shall fail at a pressure of 1590 kPa (230 psig).	Prior to waste transfers (utilizing the booster pump), it shall be verified that the rupture disk has not failed and is operable. It should be noted that this control is not required until transfers utilizing the booster pumps are initiated.

Table 4-1. New RCSTS Safety-Class Structures, Systems, and Components Summary. (3 sheets)

SSC	Accident(s)	Safety functions	Functional requirements	Performance criteria for TSRs
RCSTS transfer leak detection system (4.3.1.2.4)	Subsurface Leak Resulting in Pool (3.4.2.19)	The safety functions of the RCSTS transfer leak detection system are to detect the presence of leaks in diversion box 6241-A or vent station 6241-V and to either provide an alarm to alert operators to take mitigative action, or provide an interlock to shut down transfer pump operation, thus limiting the volume of the waste leak and decreasing the consequences of the Surface Leak Resulting in Pool and the Subsurface Leak Resulting in Pool accidents.	The RCSTS leak detectors shall detect a 51 mm (2-in) deep waste leak. The leak detection system shall activate an alarm or an interlock to prevent or stop operation of the transfer pump when a leak is detected.	The operability of the RCSTS leak detectors in diversion box 6241-V (and the associated alarm or control circuitry) that are physically connected to a waste transfer pump not under an administrative lock shall be verified quarterly by a functional test.

Note: The other Safety-Class SSCs that are applicable to the RCSTS (i.e., waste transfer line encasements) have been previously identified in the BIO. A consolidated list of all SSCs and TSRs (revised to include the RCSTS) is provided in Table 6-1 of the BIO.

Table 4-2. New Safety-Significant Structures, Systems, and Components Summary.

SSC	Accident(s)	Safety functions	Functional requirements	Performance criteria for TSRs
Diversion Box 6241-A and Vent Station 6241-V Entry Doors and Penetrations (4.4.1.2.1)	Surface Leak Resulting in a Pool (3.4.2.18)	The safety function of the diversion box and vent station entry doors and pipe penetrations is to provide a barrier to limit the release of aerosols generated by splatter during a pool leak accident and thereby limit the subsequent dose to the onsite receptor.	The entry door and pipe penetrations must confine aerosols to the inside of the structure. The entry door assemblies shall seal fit the structure, so that there are no paths for a direct aerosol leak to the atmosphere. The pipe penetrations must also be capable of being sealed during waste transfers.	The door assembly shall be visually inspected prior to a waste transfer to ensure that the door is closed and operable. The pipe penetrations for the air sampling line, exhauster hookup, liner washdown system, and emergency pumpout line are also verified to be flanged or capped prior to commencing waste transfers.
Inlet Air HEPA Unit (4.4.1.2.2)	Spray Leak in Structure or from Overground Waste Transfer Lines (3.4.2.20) Surface Leak Resulting in Pool (3.4.2.18)	The safety function of the diversion box and vent station ventilation system HEPA filter unit is to provide filtration of aerosols generated by splatter or by direct spray releases within the pits.	The HEPA filter radiation level is less than or equal to 200 mrem/hr on contact. The HEPA filter nominal particulate removal efficiency is at least 99.95%.	Operability of the HEPA filter units is verified at the time of installation and annually thereafter using a challenge aerosol.

Note: The other Safety-Significant SSCs that are applicable to the RCSTS (i.e., tank level monitors, waste transfer line encasements, and transfer leak detection systems) have been previously identified in the BIO. A consolidated list of all SSCs and TSRs (revised to include the RCSTS) is provided in Table 6-1 of the BIO.

5.0 DERIVATION OF TECHNICAL SAFETY REQUIREMENTS

5.1 INTRODUCTION

The existing operating envelope for the Tank Waste Remediation System (TWRS) is defined by the Technical Safety Requirements (TSRs) listed in Chapter 6.0 of the Basis for Interim Operation (BIO). These controls are implemented through HNF-SD-WM-TSR-006, *Tank Waste Remediation System Technical Safety Requirements*, which was prepared using the guidance of DOE 5480.22, *Technical Safety Requirements*. The purpose of this chapter is to identify the additional TSRs that bring the RCSTS within the TWRS safety envelope. The new TSRs have been added to HNF-SD-WM-TSR-006.

5.2 REQUIREMENTS

The DOE Orders required for establishing the safety basis of the RCSTS are listed below.

- DOE 5480.22, *Technical Safety Requirements*, Change 2, (1996)
- DOE 5480.23, *Nuclear Safety Analysis Reports*, Change 1 (1994).

The documents used to implement the DOE Order requirements include:

- DOE-STD-3009-94, *Preparation Guide for U.S. Department of Energy Nonreactor Nuclear Facility Safety Analysis Reports* (1994)
- WHC-CM-4-46, *Nonreactor Facility Safety Analysis Manual* (1989)
- HNF-SD-WM-HSP-002, *Tank Farms Health and Safety Plan* (1998).

5.3 TECHNICAL SAFETY REQUIREMENT COVERAGE, AND DERIVATIONS

The accident analysis in Chapter 3.0, along with the designation of safety SSCs and the associated TSRs in Chapter 4.0, indicated that operation of the RCSTS adds several new TSRs to the TWRS facility. These new controls are added to BIO Table 6-1, "Hazard and Accident Analyses; Safety Structures, Systems, and Components; and Technical Safety Requirement Cross Reference," to account for the reanalyzed accident scenarios and allow the BIO to envelope operation of the RCSTS. BIO Table 6-1 correlates the reanalyzed accident scenarios with the necessary controls and includes the Safety-Class and Safety-Significant SSCs, the type of TSR control (i.e., LCO [Limiting Condition for Operation] or AC [Administrative Control]) and the specific location of the control within the TSR (e.g., LCO 3.1.1 or AC 5.12), and a summary of the key elements of the TSR derivation basis.

The new or modified controls are discussed below. Other Safety-Class and Safety-Significant SSCs identified for the RCSTS are not unique and are covered by TSRs previously identified in the BIO.

5.3.1 AC 5.7 Nuclear Criticality Safety

The RCSTS has the capability to transfer wastes with up to a 30 vol% solids content. The intentional redistribution of solids in waste tanks (which would result from the transfer of a slurry with a high solids content) is not considered a routine activity and must be evaluated on a case by case basis. Therefore, a new control is added to AC 5.7 to require that a Criticality Safety Evaluation Report be completed prior to initiating transfers of waste slurries with high solids content through the RCSTS.

5.3.2 AC 5.18 HEPA Filter Controls

Each of the two RCSTS structures (diversion box 6241-A and vent station 6241-V) is passively ventilated with a HEPA filter. The accident analysis for the Surface Leak Resulting in Pool and Spray Leak in Structure accidents assumes that 90% of the airborne release passes through a HEPA filter with an assumed efficiency of 0.99. Because this filtering reduces the onsite consequences to below the risk evaluation guidelines, the HEPA filters are designated as Safety-Significant. Therefore, to protect the assumptions in the accident analysis, the applicability of AC 5.18 is extended to include the HEPA filters in diversion box 6241-A and vent station 6241-V. AC 5.18 requires that the filters be monitored periodically to verify that the radiation level is less than or equal to 200 mrem/h on contact and be tested annually to verify an efficiency of greater than or equal to 99.95%.

5.3.3 LCO 3.1.1 Transfer System Covers and Entry Doors

The two new RCSTS structures (diversion box 6241-A and vent station 6241-V) are designed differently than the existing waste transfer structures and will use an entry door for routine access instead of concrete covers. Therefore, LCO 3.1.1 is modified to include the entry doors for diversion box 6241-A and vent station 6241-V. The entry door will be verified to be closed prior to commencing waste transfers. In addition, both structures have several pipes (i.e. air sampling line, exhauster hookup, liner washdown system, and emergency pumpout line) that penetrate the concrete walls. These are also added to LCO 3.1.1 to ensure that the lines are either flanged or capped prior to commencing waste transfers. The purpose of these controls is to provide a barrier for aerosols that could potentially be generated from spray leaks or from splatter during pool leak events.

5.3.4 LCO 3.1.3 RCSTS Transfer Leak Detection System

The accident analysis for the RCSTS Subsurface Leak Resulting in Pool accident assumes that the subsurface leaks will drain through the encasement to a waste transfer structure where the RCSTS transfer leak detection system will detect the leak and either provide an alarm to alert operators to take mitigative action, or provide an interlock to shut down transfer pump operation, thus limiting the volume of the waste leaked. Because the accident without controls results in unacceptable offsite consequences, the RCSTS

transfer leak detection system is designated as Safety-Class. LCO 3.1.3, which applies to all process pits and diversion boxes, will ensure operability of the RCSTS transfer leak detection system.

5.3.5 LCO 3.1.5 Replacement Cross-Site Transfer System PRV and Rupture Disk

The RCSTS piping is designed for a higher pressure than the piping to which it is interconnected at the 244-A lift station. Therefore, pressure relief valves are installed in the 244-A lift station and are designed to lift at 1590 kPa (230 psig). This is equivalent to the maximum operating pressure of the existing downstream piping. The Safety-Class designation and accompanying Limiting Condition for Operation (LCO) are required to preclude introducing new potential accident initiators (from overpressurization) for the piping systems previously analyzed in the BIO. A rupture disk is located immediately upstream of and in line with each relief valve to keep the valves from becoming contaminated under normal conditions and thereby facilitates valve calibration and maintenance. At a pressure of 1590 kPa (230 psig), the rupture disks will rupture, an alarm will activate at the operator control station, and the relief valves will discharge into the 244-A catch tank. LCO 3.1.5 will verify operability of these relief devices.

Note: Transfers through replacement cross-site transfer line WT-SLL-3160 are not authorized (Wagoner 1997, Contract Number DE-AC06-96RL13200; *Approval of Authorization Basis [AB] Amendment Package for Project W-058, Replacement Cross-Site Transfer System*). LCO 3.1.5 will be added to HNF-SD-WM-TSR-006 after DOE-RL approval for transfers through line WT-SLL-3160 is granted.

5.4 DERIVATION OF FACILITY MODES

The operational modes for the TWRS facility are defined in the Technical Safety Requirements document. Operation of the RCSTS does not change any of these definitions of facility operating modes.

5.5 INTERFACE WITH TSRs FROM OTHER FACILITIES

The TSRs for the RCSTS are contained within the TSRs for TWRS.

This page intentionally left blank.

6.0 PREVENTION OF INADVERTENT CRITICALITY

This chapter contains information on prevention of inadvertent criticality as a result of the installation and/or operation of the replacement cross-site transfer system (RCSTS). Further information on the criticality safety and protection program for the Tank Waste Remediation System (TWRS) facility is provided in Section 4.3, "Criticality Protection," of the BIO. The program ensures that sufficient controls are in place to prevent inadvertent nuclear criticality excursions in the TWRS facilities.

6.1 REQUIREMENTS

See Section 4.3 of the BIO for requirements.

6.2 FACILITY IMPLEMENTATION

Prior to any slurry transfers through the RCSTS with waste tank solids, a Criticality Safety Evaluation Report will be issued which addresses the suspension of solids in the sending tank and the particle segregation after settling in the sending and receiving tanks. See Section 4.3 of the TWRS BIO for facility implementation.

6.3 PROJECT IMPLEMENTATION

Project implementation is achieved by requiring the Criticality Safety Evaluation Reports discussed in Section 6.2 above. See Chapter 3.0, Section 3.4.2.1 for further discussion on criticality.

This page intentionally left blank.

7.0 RADIATION PROTECTION

This chapter identifies the requirements for radiation protection as a result of the installation and operation of the replacement cross-site transfer system (RCSTS).

7.1 REQUIREMENTS

See Section 4.4, "Radiological Protection," of the BIO for the requirements.

7.2 FACILITY IMPLEMENTATION

See Section 4.4 of the BIO for facility implementation.

7.3 PROJECT IMPLEMENTATION

Because of the anticipated dose rates, the diversion box and vent station pits will be considered high radiation zones during all waste transfers and the entry doors will be locked. Procedural controls on physical access to high radiation zones require the person-in-charge to account for all personnel who have entered the high radiation area and to verify that all personnel have exited prior to placing the locks.

Entry will not normally be allowed to diversion box 6241-A or vent station 6241-V when waste is in the transfer line (i.e., during waste transfers or before the line has been flushed, after a transfer is complete). Entry, when waste is in the line, will only be allowed after management review and concurrence or in case of emergency. No other project-specific requirements related to radiation protection were identified for the RCSTS.

This page intentionally left blank.

8.0 HAZARDOUS MATERIAL PROTECTION

This chapter identifies the requirements for hazardous material protection other than radiological hazards for the replacement cross-site transfer system (RCSTS).

8.1 REQUIREMENTS

See Section 4.5, "Hazardous Material Protection," of the BIO for the requirements.

8.2 FACILITY IMPLEMENTATION

See Section 4.5 of the BIO for facility implementation.

8.3 PROJECT IMPLEMENTATION

No project-specific requirements related to hazardous material protection were identified for the RCSTS.

This page intentionally left blank.

9.0 RADIOACTIVE AND HAZARDOUS WASTE MANAGEMENT

This chapter lists the requirement documents for the radiological and hazardous waste management for the replacement cross-site transfer system (RCSTS).

9.1 REQUIREMENTS

See Section 4.6, "Radioactive and Hazardous Material Waste Management," of the BIO for the requirements.

9.2 FACILITY IMPLEMENTATION

See Section 4.6 of the BIO for facility implementation.

9.3 PROJECT IMPLEMENTATION

Slightly contaminated flush water is the only additional waste that is expected to be generated through operation of the RCSTS. No additional requirements relating to radioactive and hazardous waste management were identified for the RCSTS.

This page intentionally left blank.

10.0 INITIAL TESTING, IN-SERVICE SURVEILLANCE, AND MAINTENANCE

This chapter identifies the requirements for testing, surveillance, and maintenance for the replacement cross-site transfer system (RCSTS) and the implementing program documents.

10.1 REQUIREMENTS

See Section 4.7, "Testing, Surveillance, and Maintenance," of the BIO for the requirements.

10.2 FACILITY IMPLEMENTATION

See Section 4.7 of the BIO for facility implementation.

10.3 PROJECT IMPLEMENTATION

10.3.1 Initial Testing

The RCSTS is a new system and must be tested prior to becoming fully operational. A detailed test plan, HNF-SD-W058-SUP-002, *Project W058 Startup Test Plan*, describes the overall testing activities. These are summarized below.

10.3.1.1 Factory Acceptance Testing. Factory acceptance tests are performed by the vendor on the booster pumps and the monitor and control system.

10.3.1.2 Construction Acceptance Testing. Acceptance tests are conducted by the equipment vendors and the construction contractor to demonstrate compliance with fabrication, assembly, installation, and construction requirements as identified in the procurement and construction specifications.

10.3.1.3 Preoperational Testing. Preoperational testing includes testing of components, subsystems, and system operation to verify setpoints for alarms, control functions, and normal operating values for system parameters.

10.3.1.4 Operational Testing. Operational testing will be performed by operations personnel coincident with initial process operations. Testing will verify the design function of the systems in the actual operating environment.

10.3.2 In-Service Surveillance

Procedures for in-service surveillance testing will be developed in accordance with DOE 5480.19, *Conduct of Operations Requirements for DOE Facilities*.

10.3.3 Maintenance

Procedures for maintenance will be developed in accordance with DOE 5480.19.

11.0 OPERATIONAL SAFETY

This chapter identifies requirements for conduct of operations, fire protection, and the implementing program documents resulting from the operation of the replacement cross-site transfer system (RCSTS).

11.1 REQUIREMENTS

See Sections 4.8, "Conduct of Operation," 4.9, "Work Control," and 4.10, "Fire Protection Program," of the BIO for the requirements.

11.2 FACILITY IMPLEMENTATION

See Sections 4.8, 4.9, and 4.10 of the BIO for facility implementation.

11.3 PROJECT IMPLEMENTATION

No project-specific requirements related to fire protection were identified for the RCSTS. It was concluded in WHC-SD-W058-PHA-001 that a fire protection system for the RCSTS is not required. Normal fire safety practices will be followed.

One operational safety concern, related to the pit entry doors, has been identified for the diversion box and the vent station. This concern is actually twofold and involves ensuring free and unobstructed egress when the structure is occupied and preventing inadvertent entrapment when the doors are closed and locked prior to initiating waste transfers.

The situation where the structures are occupied is considered first. Because of the mass of the doors and the attendant forces required for opening, industrial safety requirements (as described in 29 CFR 1910, "Occupational Safety and Health Standards", DOE 5480.7A[1], *Fire Protection*, and NFPA 101, *Life Safety Code*) mandate that the doors be locked or blocked in the open position when the pits are occupied. Signs indicating this requirement are posted in both the diversion box and vent station. Adherence to posted personnel protection requirements is mandated through operating procedures.

The entrapment concern arises when the entry doors are closed and locked prior to waste transfers. This concern derives from the structure design which includes a corridor that runs between the entry door and the pit and precludes visual contact with the pit for an operator standing at the door. Prevention of inadvertent entrapment is achieved through maintaining personnel accountability and verifying that the area is unoccupied prior to placing the locks as will be described below.

---

[1]Although DOE 5480.7A has been rescinded, the contractor is obligated by the existing contract to meet the requirements stated in this order.

As noted in Chapter 7.0 of this addendum, the diversion box and vent station pits will be considered high radiation zones during waste transfers and the entry doors will be locked. This posting and locking of the doors will occur before initiating any waste transfer. Radiological protection procedures also require that the area be verified to be unoccupied prior to placing the locks.

Additional programmatic controls also protect against the entrapment scenario. The diversion box and vent station will be procedurally defined as hazardous facilities and thus be subject to hazardous facility access controls. Per procedure, access control to hazardous facilities is maintained by the shift manager. These procedures require that the shift manager be notified prior to entry of the facility and upon final exit and securing of the facility.

As discussed above, personnel accountability in the diversion box and vent station pits is maintained through two different sets of controls: radiological protection controls and hazardous facility access controls. These controls provide dual and independent levels of protection against inadvertent entrapment.

12.0 PROCEDURES AND TRAINING

This chapter lists the requirements for the procedures and training programs for the replacement cross-site transfer system (RCSTS).

12.1 REQUIREMENTS

See Section 4.11, "Training and Procedures," of the BIO for the requirements.

12.2 FACILITY IMPLEMENTATION

See Section 4.11 of the BIO for facility implementation.

12.3 PROJECT IMPLEMENTATION

No project-specific requirements related to training were identified for the RCSTS.

This page intentionally left blank.

13.0 HUMAN FACTORS

This chapter lists the requirements for a human factors program to demonstrate that human factors are considered in facility design for the replacement cross-site transfer system (RCSTS) where human actions are relied on for preventive or mitigative actions.

13.1 REQUIREMENTS

See Section 4.18, "Human Factors," of the BIO for the requirements.

13.2 FACILITY IMPLEMENTATION

See Section 4.18 of the BIO for facility implementation.

13.3 PROJECT IMPLEMENTATION

The application of human factors is graded on project risk, complexity, and level of involvement of the operator at the facility. The TWRS design authority and safety organization are responsible for ensuring human factors are included as an explicit consideration in the modification of TWRS facilities, systems, or equipment that may affect safety. The risk, complexity, and level of operator involvement for the RCSTS are similar to normal DST operations. However, in March of 1995 a human factors programming session was conducted. Consequently, no additional human factors analysis is required.

This page intentionally left blank.

14.0 QUALITY ASSURANCE

This chapter lists the requirements for a quality assurance program to ensure the safety of personnel and the public, for environmental protection, and for the implementing program documents for the replacement cross-site transfer system (RCSTS).

14.1 REQUIREMENTS

See Section 4.12, "Quality Assurance," of the BIO for the requirements.

14.2 FACILITY IMPLEMENTATION

See Section 4.12 of the BIO for facility implementation.

14.3 PROJECT IMPLEMENTATION

Implementation of specific quality assurance requirements for the RCSTS is controlled by HNF-SD-W058-QAPP-001, *Project Specific Quality Assurance Plan Project W-058, Replacement of the Cross-Site Transfer System.*

The quality assurance program consists of the following:

- Personnel performing work on this project have been trained and qualified in accordance with the above quality assurance programs and DOE 5480.20A, *Personnel Selection, Qualification, and Training Requirements for DOE Nuclear Facilities.*
- Quality improvement processes described in the quality assurance programs provide for the detection and correction of quality problems throughout the design and construction of this project.
- Documents associated with this project have been independently reviewed for completeness and accuracy. A record index is available to classify all quality assurance records to aid in retrieval.
- Work processes associated with this project have been and will be strictly adhered to in accordance with this quality assurance program. Appropriate administrative procedures have been developed and approved to control key aspects in the design and construction of this project.
- Designs associated with this project have been independently reviewed and approved. Completed construction is accurately depicted by as-built drawings.

- Procurement of Safety-Class and Safety-Significant items for this project are in compliance with this quality assurance program in that such items have been purchased from qualified suppliers where applicable and all stated requirements have been met as verified through independent inspections, tests, and assessments. All required Certified Vendor Information has been received and appropriately indexed and filed to support continuity of service for this project.

- Inspection and testing of items associated with this project will meet required standards as verified by properly trained and qualified personnel. Records supplied on project turnover will attest to the accuracy and completeness of the inspection and testing.

- Periodic management assessment of this project has been established to ensure this project is compliant with this quality assurance plan and the objectives stated therein.

- Independent assessments will be planned, scheduled, and conducted to confirm that project deliverables and service quality are adequate to meet operational objectives.

15.0 EMERGENCY PREPAREDNESS PROGRAM

This chapter identifies the requirements for the emergency preparedness functions and response at the site of the replacement cross-site transfer system (RCSTS).

15.1 REQUIREMENTS

See Section 4.13, "Emergency Preparedness," of the BIO for the requirements.

15.2 FACILITY IMPLEMENTATION

See Section 4.13 of the BIO for facility implementation.

15.3 PROJECT IMPLEMENTATION

No project-specific requirements related to emergency preparedness were identified for the RCSTS.

This page intentionally left blank.

16.0 PROVISIONS FOR DECONTAMINATION AND DECOMMISSIONING

This chapter describes provisions that facilitate future decontamination and decommissioning (D&D) of the replacement cross-site transfer system (RCSTS).

16.1 REQUIREMENTS

See Section 4.14, "Decontamination and Decommissioning," of the BIO for the requirements.

16.2 IMPLEMENTATION

See Section 4.14 of the BIO for implementation.

16.3 PROJECT IMPLEMENTATION

There is no requirement for a specific implementing document for D&D of the RCSTS.

This page intentionally left blank.

17.0 MANAGEMENT, ORGANIZATION, AND INSTITUTIONAL SAFETY PROVISIONS

This section provides the requirements for organization and institutional safety provisions that are pertinent to the safety analysis and the implementing program documents for the replacement cross-site transfer system (RCSTS).

17.1 REQUIREMENTS

See Section 4.1, "Organizational Structure and Management Responsibilities," of the BIO for the requirements.

17.2 FACILITY IMPLEMENTATION

See Section 4.1 of the BIO for facility implementation.

17.3 PROJECT IMPLEMENTATION

No project-specific requirements related to management, organization, and institutional safety provisions were identified for the RCSTS.

This page intentionally left blank.

18.0 REFERENCES

29 CFR 1910, 1995, "Occupational Safety and Health Standards," *Code of Federal Regulations*, as amended.

40 CFR 264, 1995, "Standards for Owners and Operators of Hazardous Waste Treatment, Storage, and Disposal Facilities," *Code of Federal Regulations*, as amended.

40 CFR 265, 1995, "Interim Status Standards for Owners and Operators of Hazardous Waste Treatment, Storage, and Disposal Facilities," *Code of Federal Regulations*, as amended.

ACI 349-90, 1990, *Code Requirements for Nuclear Safety Related Concrete Structures*, American Concrete Institute, Farmington Hills, Michigan.

ANSI/ASME B31.3, 1993, *Chemical Plant and Petroleum Refinery Piping*, American National Standards Institute, American Society of Mechanical Engineers, New York, New York.

ASME AG-1, 1991, *Code on Nuclear Air and Gas Treatment*, American Society of Mechanical Engineers, New York, New York.

DOE 5480.7A, *Fire Protection*, U.S. Department of Energy, Washington, D.C. Note: Cancelled by DOE N 251.4, DOE O 440.1, and DOE O 420.1. Compliance with DOE 5480.7A is required until the Contracting Officer directs compliance with DOE O 440.1 or DOE O 420.1 or provides other direction to terminate compliance with DOE 5480.7A.

DOE 5480.11, 1992, *Radiation Protection for Occupational Workers*, Change 3, U.S. Department of Energy, Washington, D.C.

DOE 5480.19, 1992, *Conduct of Operations Requirements for DOE Facilities*, Change 1, U.S. Department of Energy, Washington, D.C.

DOE 5480.20A, 1994, *Personnel Selection, Qualification, and Training Requirements for DOE Nuclear Facilities*, U.S. Department of Energy, Washington, D.C.

DOE 5480.22, 1996, *Technical Safety Requirements*, Change 2, U.S. Department of Energy, Washington, D.C.

DOE 5480.23, 1994, *Nuclear Safety Analysis Reports*, Change 1, U.S. Department of Energy, Washington, D.C.

DOE 6430.1A, 1989, *General Design Criteria*, Change 0, U.S. Department of Energy, Washington, D.C.

DOE-76-45/4 SSDC-4, 1992, *MORT User's Manual*, Rev. 3, U.S. Department of Energy, Washington, D.C.

DOE N 251.4, 1995, *Cancellation of Directives*, U.S. Department of Energy, Washington D.C.

DOE O 420.1, 1996, *Facility Safety*, Change 2, U.S. Department of Energy, Washington D.C.

DOE O 440.1, 1996, *Worker Protection Management for DOE Federal and Contractor Employees*, Change 1, U.S. Department of Energy, Washington D.C.

DOE-STD-1027-92, 1992, *Hazard Categorization and Accident Analysis Techniques for Compliance with DOE Order 5480.23, Nuclear Safety Analysis Reports*, U.S. Department of Energy, Washington, D.C.

DOE-STD-3009-94, 1994, *Preparation Guide for U.S. Department of Energy Nonreactor Nuclear Facility Safety Analysis Reports*, U.S. Department of Energy, Washington, D.C.

Dunford, G. L., 1996, *Tank Waste Remediation System Final Safety Analysis Report Project Plan Comment Response; Risk Based Approach*, (external letter 9651491 to D. H. Alexander, U.S. Department of Energy, Richland Operations Office, April 3) Westinghouse Hanford Company, Richland, Washington.

HNF-2542, 1998, *Revised Spray Leak Calculations for Project W-058*, Rev. 0, Fluor Daniel Northwest, Richland, Washington.

HNF-SD-TWR-TI-002, *Analysis of Consequences at State Route 240 from Postulated Accidents at Tank Waste Remediation System Facilities to Support Development of Emergency Response Plans*, Rev. 0, Duke Engineering & Services Hanford, Richland, Washington.

HNF-SD-W058-QAPP-001, 1997, *Project Specific Quality Assurance Plan Project W-058, Replacement Cross-Site Transfer System*, Rev. 5, Fluor Daniel Northwest, Richland, Washington.

HNF-SD-W058-SUP-002, *Project W058 Startup Test Plan*, Rev. 1, Numatec Hanford Corporation, Richland, Washington.

HNF-SD-WM-BIO-001, 1997, *Tank Waste Remediation System Basis for Interim Operation*, Rev. 1, Fluor Daniel Hanford, Inc., Richland, Washington.

HNF-SD-WM-HSP-002, 1998, *Tank Farms Health and Safety Plan*, Rev. 3, Lockheed Martin Hanford Corporation, Richland, Washington.

HNF-SD-WM-TSR-006, 1997, *Tank Waste Remediation System Technical Safety Requirements*, Fluor Daniel Hanford, Inc., Richland, Washington.

NFPA 101, 1997, *Life Safety Code*, National Fire Protection Association, Quincy, Massachusetts.

NFPA 70, 1990, *National Electrical Code*, National Fire Protection Association, Quincy, Massachusetts.

Parsons, G. L., 1994, *Project W-058/W-028 Material of Construction Position Paper*, Internal Memo 7F540-94-019 to J. D. Thomson, June 10, Westinghouse Hanford Company, Richland, Washington.

SDC-4.1, 1993, *Standard Architectural-Civil Design Criteria: Design Loads for Facilities*, DOE-RL-SDC-4.1, Rev. 12, Hanford Plant Standard, Westinghouse Hanford Company, Richland, Washington.

TF-96-0433 (USQ Tracking No.), 1996, *Consolidation of Flammable Gas/Slurry Growth Unreviewed Safety Question Issues*, Rev. 1, Westinghouse Hanford Company, Richland, Washington.

WAC 173-303, 1995, "Dangerous Waste Regulations", Washington State Department of Ecology, *Washington Administrative Code*, as amended.

Wagoner, J. D., 1996, *Contract Number DE-AC06-96RL13200; The U.S. Department of Energy (DOE), Richland Operations Office (RL), Definition and Declaration of Flammable Gas Unreviewed Safety Question (USQ)*, (Letter 96-WSD-283, to H. J. Hatch, Fluor Daniel Hanford, Inc., November 1), U.S. Department of Energy Richland Operations, Richland, Washington.

Wagoner, J. D., 1997, *Contract Number DE-AC06-96RL13200; Approval of Authorization Basis (AB) Amendment Package for Project W-058, Replacement Cross-Site Transfer System*, (Letter 97-WSD-247, to H. J. Hatch, Fluor Daniel Hanford, Inc., December 15), U.S. Department of Energy, Richland Operations, Richland, Washington.

WHC-CM-4-46, 1989, *Nonreactor Facility Safety Analysis Manual*, Westinghouse Hanford Company, Richland, Washington.

WHC-SD-SQA-CSA-20356, 1993, *CSER 92-009: An Analytical Model for Evaluating Subcritical Limits for Waste in Hanford Site Storage Tanks*, Rev. 0, Westinghouse Hanford Company, Richland, Washington.

WHC-SD-SQA-CSA-20363, 1994, *CSER 94-001: Criticality Safety of Single-Shell Waste Storage Tanks*, Rev. 0, Westinghouse Hanford Company, Richland, Washington.

WHC-SD-SQA-CSA-20368, 1994, *CSER 94-004: Criticality Safety of Double-Shell Waste Storage Tanks*, Rev. 0, Westinghouse Hanford Company, Richland, Washington.

WHC-SD-W058-FDC-001, 1996, *Functional Design Criteria for Project W-058, Replacement of the Cross-Site Transfer System*, Rev. 4, Westinghouse Hanford Company, Richland, Washington.

WHC-SD-W058-FHA-001, 1996, *Fire Hazards Analysis for the Replacement Cross-Site Transfer System, Project W-058*, Rev. 1, Westinghouse Hanford Company, Richland, Washington.

WHC-SD-W058-PHA-001, 1997, *Hazards and Operability Study for the Replacement Cross-Site Transfer System*, Rev. 0A, Westinghouse Hanford Company, Richland, Washington.

WHC-SD-WM-SARR-011, 1996, *Toxic Chemical Considerations for Tank Farm Releases*, Rev. 2, Westinghouse Hanford Company, Richland, Washington.

WHC-SD-WM-SARR-016, 1996, *Tank Waste Compositions and Atmospheric Dispersion Coefficients for use in Safety Analysis Consequence Assessments*, Rev. 2, Westinghouse Hanford Company, Richland, Washington.

WHC-SD-WM-SARR-037, 1996, *Development of Radiological Concentrations and Unit Liter Doses for TWRS FSAR Radiological Consequence Calculations*, Rev. 0, Westinghouse Hanford Company, Richland, Washington.

APPENDIX A

HAZARDS BASES

This page intentionally left blank.

LIST OF TABLES

A-1 RCSTS Hazards Identification A-5

A-2 RCSTS Material at Risk A-6

A-3 RCSTS Facility Configurations A-7

This page intentionally left blank.

Table A-1. RCSTS Hazards Identification.[a]

Energy classification[b]	RCSTS	
	PF	PE
Corrosive	2	NA
Explosive/pyrophoric	6,7,8,10	NA
Nuclear criticality	NA	NA
Flammable materials	11,13,14	3,7
Thermal radiation	NA	NA
Chemical reactions	1	NA
Friction	NA	NA
Electrical	3,4,5,9,10	NA
Kinetic-rotational	2,3	NA
Kinetic-linear	NA	1,4,5
Mass, gravity, height	2,3,11,13,14, 16	5
Pressure-volume	7,9,11	NA
Thermal (except radiant)	NA	NA

[a]The hazards identification represents the hazards that could potentially cause an uncontrolled release of radioactive or hazardous materials only. Hazards only resulting in personnel injury are not included.

[b]Table 3-2, "Hazard Identification Checklist and Energy Designators," in this addendum, has the specific energy classifications represented by the numeric designators.

NA = not applicable.
PE = potentially present elsewhere in/adjacent to facility.
PF = potentially present in the facility.

Table A-2. RCSTS Material at Risk (MAR).

Field Name	MAR-subject	MAR description	MAR classification	Capacity	Material type	Physical form	Volume or activity	Transient	Quantity	Comments
RCSTS	Contents of Pipeline or Source tank during transfer	Transfer Piping	NA	NA	NA	Liquid Slurry	NA	NA	NA	Two RCSTS Transfer Lines
Diversion Box 6241-A	Contamination in Sump	RCSTS Diversion Box	Residual	NA	NA	Residue	Unknown	No	1 Pit	
Diversion Box 6241-A	Ventilation Filter Contents	Exhauster HEPA Filter	NA	NA	NA	Particulate	NA	NA	NA	Portable Exhauster
Diversion Box 6241-A	Ventilation Filter Contents	Air Inlet HEPA Filter	NA	NA	NA	Particulate	NA	NA	NA	
Vent Station 6241-V	Contamination in Sump	RCSTS Diversion Box	Residual	NA	NA	Residue	Unknown	No	1 Pit	
Vent Station 6241-V	Ventilation Filter Contents	Exhauster HEPA Filter	NA	NA	NA	Particulate	NA	NA	NA	Portable Exhauster
Vent Station 6241-V	Ventilation Filter Contents	Air Inlet HEPA Filter	NA	NA	NA	Particulate	NA	NA	NA	
RCSTS Water Flush System	Dilute Caustic	RCSTS Water Flush System	Caustic	47,000 gal	Dilute Caustic	Liquid	140 gpm	NA	NA	Flush of the RCSTS after usage with caustic solution
RCSTS Chemical Injection Package	25% NaOH	Chemical Injection Package	Caustic	55 gal	NaOH	Liquid	NA	NA	NA	

Table A-3. RCSTS Facility Configurations.

Facility Name	Type	Ventilation	Comment Ventilation	Flush	Comment Flush
RCSTS	Pipeline	NA	NA	Yes	Pipeline Flushed after usage
Diversion Box 6241-A	Pump Station	Passive	Exhauster connected up with ventilation system when needed	Yes	Pipeline in Diversion Box Flushed after usage
Vent Station 6241-V	Vent Station	Passive	Exhauster connected up with ventilation system when needed	Yes	Pipeline in Vent Station Flushed after usage

This page intentionally left blank.

APPENDIX B

ANALYZED ACCIDENTS AND REPRESENTED HAZARDOUS CONDITIONS

This page intentionally left blank.

LIST OF TABLES

B-1 Analyzed Accidents B-1-1

B-2 Analyzed Accidents and the Represented Hazardous Conditions . . . B-2-1

This page intentionally left blank.

Table B-1. Analyzed Accidents. (3 sheets)

BIN	ID	Material at Risk	Hazardous Condition	Cause	Initial Freq NC	Initial Safety Cons NC	Cause Grp	BIO Acc
ANALYZED ACCIDENT: Nuclear Criticality								
A-1-a	I-PFP-1-AGT-A	Fission product gases and aerosols from receiver tank.	Release of fission product gases and aerosols from receiver tank due to: Potential for solids to collect in D-5. If mixed later, potential for composition of next batch to exceed Criticality Prevention Specifications (CPS). Potential "Criticality Issue."	Human Error or Agitator fails results in criticality	F3	S2	A05	01
ANALYZED ACCIDENT: HEPA Filter Failure - Exposure to High Temperature or Pressure								
A-1-a	106C-10J	Tank atmosphere and surface contamination on HEPA filters	Release of radioactive and/or hazardous material from Tank 241-C-106 tank due to tank structural damage, HEPA damage caused by high temperature	Fire in or around ventilation system	F2	S2	B09	02A
ANALYZED ACCIDENT: Unfiltered Release								
B-1-a	114SX-04.c.2.a	Radioactive aerosols contained in the tank headspace	Radioactive aerosols released from Tank SX-114 head space to atmosphere due to exhauster HEPA filter seal failure	HEPA filter seal failure	F3	S2	D07	02B
ANALYZED ACCIDENT: Fire in Contaminated Area								
A-1-a	CRN-05	Pits and risers inventory	Release of radioactive and/or toxic materials from pits and risers due to fuel tank fire in crane or support vehicle (see In-Tank Equipment Installation for tank fires)	Human error in positioning crane load	F3	S2	B26	03
ANALYZED ACCIDENT: Subsurface Leak Remaining Subsurface								
B-3-b	102S-01.b3	Radioactive/hazardous material contained in pumpable liquids from S-102.	Radioactive liquid released to the soil subsurface from leaks in transfer Lines SL-140, SN-242. (Plume)	Line leak during salt well pumping (corrosion)	F3	S2	D12	07
ANALYZED ACCIDENT: Caustic Spray Leak								
B-1-a	107AN-02-PRES	Contents of caustic truck	Release of caustic aerosol from caustic truck transfer piping due to spray leak	Piping/hose leak initiated by various causes	F3	S2	D12	09

Table B-1. Analyzed Accidents. (3 sheets)

BIN	ID	Material at Risk	Hazardous Condition	Cause	Initial Freq NC	Initial Safety Cons NC	Cause Grp	BIO Acc
ANALYZED ACCIDENT: Mixing of Incompatible Material - Toxic Vapor Generation								
C-1-a	XS-26-PRES XS-26-TEMP	DST vapor/aerosols	Release of toxic vapors from Tank 241-SY-102 due to chemical reaction	Mistransfer of incompatible waste causes chemical reaction	F3	S2	E06	11
ANALYZED ACCIDENT: Mixing of Incompatible Material - Tank Pressurization								
B-1-a	I-222S-1-RXN-A	Aerosols and/or toxic vapors from receiver tank	Release of aerosols and/or toxic vapors from receiver tank due adverse chemical reactions from incompatible waste.	Transfer of incompatible waste	F3	S2	D01	12
ANALYZED ACCIDENT: Flammable Gas Deflagrations								
A-1-a	ITK-10-b	DST tank inventory	Release of radioactive material from in-tank fire or explosion due to intrusive activity (Dome Collapse)	Spark from equipment or tools	F3	S3	B04	14A
A-1-a	XS-01-FLOW03	SST and DCRT tank contents	Release of liquids, solids, and/or vapors from single shell tank due to dome collapse and DCRT pressurization caused by flammable gas explosion/fire propagating from DCRT to single shell tank	Pipeline connecting single shell tank and DCRT fills with flammable gas; loss of ventilation flow in DCRT so that a flammable gas atmosphere is ignited by the ventilation outlet heater	F2	S3	B07	14B
ANALYZED ACCIDENT: Surface Leak Resulting in Pool								
C-2-b	W058-PRES01	Amount of slurry transferred (20,000 to 1,000,000 gallons)	Release of radioactive slurry to the soil surface from overflow in the SY-A or SY-B valve pit due to piping system leak (Pool)	Water hammer plus mitigative features failure	F3	S2	D17	18
ANALYZED ACCIDENT: Subsurface Leak Resulting in Pool								
B-3-b	XS-07-FLOW02	Liquid radioactive waste transferred out of DCRT	Release of radioactive waste to soil from transfer piping out of 244-TX DCRT due to leak in primary pipe and encasement	Corrosion of inner and outer pipe	F3	S2	D16	19A
B-3-b	XS-07-FLOW06	Liquid radioactive waste transferred out of DCRT	Release of radioactive waste to soil from transfer pipe out of 244-TX-DCRT due to leak in primary pipe and encasement	Water hammer causes failure of primary pipe and encasement	F3	S2	D17	19B
ANALYZED ACCIDENT: Spray Leak in Structure or from Overground Waste Transfer Lines								
B-1-a	XS-06-FLOW02	DCRT waste being transferred to 102-SY	Release of liquid radioactive waste from DCRT transfer piping to Tank 241-SY-102 due to spray leak in DCRT pump pit	Pipe failure in DCRT pump pit causing spray leak	F2	S3	D12	20
ANALYZED ACCIDENT: Spray Leak from Underground Waste Transfer Lines								
B-1-a	EE-16	Material leaked from transfer line	Release of radioactive and hazardous material from transfer line spray leak due to excavation error	Excavation into waste transfer line during a transfer	F3	S3	D22	21

Table B-1. Analyzed Accidents. (3 sheets)

BIN	ID	Material at Risk	Hazardous Condition	Cause	Initial Freq NC	Initial Safety Cons NC	Cause Grp	BIO Acc
ANALYZED ACCIDENT: Natural Phenomena - Seismic								
B-1-a	NP-07	Multiple tanks and ventilation systems inventories, 204-AR tanker spill	Radioactive and hazardous material releases from tanks and ventilation systems due to seismic event	Earthquake collapses domes	F1	S3	D18	25

CPS = criticality prevention specifications.
DCRT = double-contained receiver tank.
DST = double-shell tank.
HEPA = high-efficiency particulate air (filter).
MISF = miscellaneous inactive storage facility.
NC = no controls.
SST = single-shell tank.

This page intentionally left blank.

Table B-2. Analyzed Accidents and the Represented Hazardous Conditions. (25 sheets)

BIN	ID	Material at Risk	Hazardous Condition	Cause	Initial Freq NC	Initial Safety Cons NC	Cause Grp	BIO Acc
ANALYZED ACCIDENT: Nuclear Criticality								
A-1-a	I-PFP-1-AGT-A	Fission product gases and aerosols from receiver tank.	Release of fission product gases and aerosols from receiver tank due to: Potential for solids to collect in D-5. If mixed later, potential for composition of next batch to exceed Criticality Prevention Specifications (CPS). Potential "Criticality Issue."	Human Error or Agitator fails results in criticality	F3	S2	A05	01
HAZARDOUS CONDITIONS								
A-1-a	RCSTS-01-FLOW02	Fissile material in waste Tank 241-SY-102	Release of radioactive aerosols and entrained solids to the atmosphere from Tank 241-SY-102 due to criticality.	Mistransfer of material containing organic extractant from east area via the supernate piping route	F1	S2	A01	01X
ANALYZED ACCIDENT: HEPA Filter Failure - Exposure to High Temperature or Pressure								
A-1-a	106C-10J	Tank atmosphere and surface contamination on HEPA filters	Release of radioactive and/or hazardous material from Tank 241-C-106 tank due to tank structural damage, HEPA damage caused by high temperature	Fire in or around ventilation system	F2	S2	B09	02A
HAZARDOUS CONDITIONS								
C-1-c	RCSTS-08-FILTER01*	Residual contamination in Diversion Box 6241-A	Release of residual contamination from Diversion Box 6241-A due to failure of inlet HEPA filter.	Tornado or high winds across inlet	F1	S2	D20	02X
C-1-c	RCSTS-09-FILTER01*	Residual contamination in Vent Station 6241-V	Release of residual contamination from Vent Station 6241-V due to failure of inlet HEPA filter.	Tornado or high winds across inlet	F1	S2	D20	02X
ANALYZED ACCIDENT: Unfiltered Release								
B-1-a	114SX-04,c.2.a	Radioactive aerosols contained in the tank headspace	Radioactive aerosols released from Tank 241-SX-114 head space to atmosphere due to exhauster HEPA filter seal failure	HEPA filter seal failure	F3	S2	D07	02B
HAZARDOUS CONDITIONS								
C-1-c	RCSTS-08-FILTER02*	Residual contamination in Diversion Box 6241-A	Release of residual contamination from Diversion Box 6241-A due to failure of inlet HEPA filter.	HEPA filter structural failure or seal failure	F3	S2	D12	02X

Table B-2. Analyzed Accidents and the Represented Hazardous Conditions. (25 sheets)

BIN	ID	Material at Risk	Hazardous Condition	Cause	Initial Freq NC	Initial Safety Cons NC	Cause Grp	BIO Acc
C-1-c	RCSTS-09-FILTER02*	Residual contamination in Vent Station 6241-V	Release of residual contamination from Vent Station 6241-V due to failure of inlet HEPA filter.	HEPA filter structural failure or seal failure	F3	S2	D12	02X
			ANALYZED ACCIDENT: Fire in Contaminated Area					
A-1-a	CRN-05	Pits and risers inventory	Release of radioactive and/or toxic materials from pits and risers due to fuel tank fire in crane or support vehicle (see In-Tank Equipment Installation for tank fires)	Human error in positioning crane load	F3	S2	B26	03
			HAZARDOUS CONDITIONS					
B-1-a	RCSTS-03-TEMP01*	Residual contamination in valve pit	Release of radioactive material to the atmosphere from the SY valve pit due to fire in pit.	Fire in the pit caused by maintenance or electrical problem	F2	S2	D09	03X
			ANALYZED ACCIDENT: Subsurface Leak Remaining Subsurface					
B-3-b	102S-01.b3	Radioactive/hazardous material contained in pumpable liquids from Tank 241-S-102.	Radioactive liquid released to the soil subsurface from leaks in transfer Lines SL-140, SN-242. (Plume)	Line leak during salt well pumping (corrosion)	F3	S2	D12	07
			HAZARDOUS CONDITIONS					
C-3-b	RCSTS-10/11-INTEG02b*	Amount of supernate transferred (20,000 to 1,000,000 gallons)	Release of radioactive supernate to the soil subsurface from the underground piping between the diversion box and the vent station due to piping system leak.	Failure of primary and encasement piping due to corrosion	F2	S2	D16	07X
C-3-b	RCSTS-10/11-INTEG05b*	Amount of supernate transferred (20,000 to 1,000,000 gallons)	Release of radioactive supernate to the soil subsurface from the underground piping between the diversion box and the vent station due to piping system leak.	Failure of primary and encasement piping due to unrecognized material flaw	F2	S2	D12	07X
C-3-b	RCSTS-10/11-PRES01b*	Amount of supernate transferred (20,000 to 1,000,000 gallons)	Release of radioactive supernate to the soil subsurface from the underground piping between the diversion box and the vent station due to piping system leak.	Failure of primary and encasement piping due to water hammer	F3	S2	D17	07X
C-3-b	RCSTS-12/13-INTEG02b*	Amount of supernate transferred (20,000 to 1,000,000 gallons)	Release of radioactive supernate to the soil subsurface from the underground piping between the vent station and the 244-A Lift Station due to piping system leak.	Failure of primary and encasement piping due to corrosion	F2	S2	D16	07X

Table B-2. Analyzed Accidents and the Represented Hazardous Conditions. (25 sheets)

BIN	ID	Material at Risk	Hazardous Condition	Cause	Initial Freq NC	Initial Safety Cons NC	Cause Grp	BIO Acc
C-3-b	RCSTS-12/13-INTEG05b*	Amount of supernate transferred (20,000 to 1,000,000 gallons)	Release of radioactive supernate to the soil subsurface from the underground piping between the vent station and the 244-A Lift Station due to piping system leak.	Failure of primary and encasement piping due to unrecognized material flaw	F2	S2	D12	07X
C-3-b	RCSTS-12/13-PRES01b*	Amount of supernate transferred (20,000 to 1,000,000 gallons)	Release of radioactive supernate to the soil subsurface from the underground piping between the vent station and the 244-A Lift Station due to piping system leak.	Failure of primary and encasement piping due to steam hammer caused by loss of flushwater flow to steam mixing chamber in east area	F3	S2	D26	07X
ANALYZED ACCIDENT: Caustic Spray Leak								
B-1-a	107AN-02-PRES	Contents of caustic truck	Release of caustic aerosol from caustic truck transfer piping due to spray leak	Piping/hose leak initiated by various causes	F3	S2	D12	09
HAZARDOUS CONDITIONS								
B-1-a	RCSTS-2FS-FLOW01	Caustic water based solution	Release of caustic solution spray to the atmosphere from the water flush system due to a transfer line break.	Line break (upstream of flush pump) due to structural failure	F2	S2	D26	09X
B-1-a	RCSTS-2FS-FLOW02	Caustic water based solution	Release of caustic solution spray to the atmosphere from the water flush system due to a transfer line break.	Line break (downstream of flush pump) due to structural failure	F2	S2	D26	09X
B-1-a	RCSTS-2FS-FLOW03	Caustic water based solution	Release of caustic solution spray to the atmosphere from the water flush system due to a transfer line break.	Line plug - before heaters due to debris buildup causing a pressure buildup and failure of line	F2	S2	D26	09X
B-1-a	RCSTS-2FS-FLOW04	Caustic water based solution	Release of caustic solution spray to the atmosphere from the water flush system due to a transfer line break.	Line plug - after heaters due to debris buildup causing pressure buildup at the heater and resulting in heater pipe failure	F2	S2	D26	09X
B-1-a	RCSTS-2FS-FLOW05	Caustic water based solution	Release of caustic solution spray to the atmosphere from the water flush system due to a relief valve failure.	Caustic injection pressure relief valve failure	F3	S2	D12	09X
B-1-a	RCSTS-2FS-FLOW07	Caustic water based solution	Release of caustic solution spray to the atmosphere from the water flush system due to a transfer line break.	Flush line break due to structural failure	F2	S2	D26	09X
B-1-a	RCSTS-2FS-PRES01	Caustic water based solution	Release of caustic solution spray to the atmosphere from the water flush system due line plug.	Flush line plug - before heaters due to debris buildup causing a pressure buildup and failure of line	F2	S2	D26	09X

Table B-2. Analyzed Accidents and the Represented Hazardous Conditions. (25 sheets)

BIN	ID	Material at Risk	Hazardous Condition	Cause	Initial Freq NC	Initial Safety Cons NC	Cause Grp	BIO Acc
B-1-a	RCSTS-2FS-PRES02	Caustic water based solution	Release of caustic solution spray to the atmosphere from the water flush system due to a line plug.	Flush line plug - after heaters due to debris buildup causing pressure buildup at the heater and resulting in heater pipe failure	F2	S2	D26	09X
B-1-a	RCSTS-2FS-PRES03	Caustic water based solution	Release of caustic solution spray to the atmosphere from the water flush system due to a line break.	Flush line break due to structural failure	F2	S2	D26	09X
B-1-a	RCSTS-2FS-TEMP01	Caustic water based solution	Release of caustic solution spray to the atmosphere from the water flush system due to a line plug.	Flush line plug - before heaters due to debris buildup causing a pressure buildup and failure of line	F2	S2	D26	09X
B-1-a	RCSTS-2FS-TEMP02	Caustic water based solution	Release of caustic solution spray to the atmosphere from the water flush system due to freezing conditions.	Freezing weather with loss of heat trace function	F2	S2	D24	09X
B-1-a	RCSTS-4FS-FLOW03	Concentrated caustic	Release of caustic to the atmosphere from the caustic system due to pressure relief valve failing open.	Pressure relief valve fails open	F2	S2	D12	09X
B-1-a	RCSTS-4FS-FLOW04	Concentrated caustic	Release of caustic to the atmosphere from the caustic system due to over pressurization of line and failure of pressure relief valve to open.	Back pressure valve fails in closed position	F2	S2	D12	09X
B-1-a	RCSTS-4FS-FLOW05	Concentrated caustic	Release of caustic to the atmosphere from the caustic system due to line failure in chemical injection package.	Line failure/leak due to structural failure	F2	S2	D19	09X
B-1-a	RCSTS-4FS-FLOW06	Concentrated caustic	Release of caustic to the atmosphere from the caustic system due to a caustic system drain valve leak.	Caustic drain valve leak	F2	S2	D12	09X
B-1-a	RCSTS-4FS-PRES/TEMP01	Concentrated caustic	Release of caustic to the atmosphere from the caustic system due to pressure relief valve failing open.	Pressure relief valve fails open on caustic injection system.	F2	S2	D06	09X
B-1-a	RCSTS-4FS-PRES/TEMP02	Concentrated caustic	Release of caustic to the atmosphere from the caustic system due to pressure relief valve failing in closed position and rupture of line.	Back pressure relief valve fails in closed position.	F3	S2	D12	09X
B-1-a	RCSTS-5FS-FLOW01	Caustic water based solution	Release of caustic to the atmosphere from caustic line due to a line break.	Line break due to structural failure.	F2	S2	D19	09X

Table B-2. Analyzed Accidents and the Represented Hazardous Conditions. (25 sheets)

BIN	ID	Material at Risk	Hazardous Condition	Cause	Initial Freq NC	Initial Safety Cons NC	Cause Grp	BIO Acc
B-1-a	RCSTS-5FS-FLOW02	Caustic water based solution	Release of caustic to the atmosphere from caustic line due to a line break.	Line plug due to debris buildup causing pressure buildup resulting in pipe failure.	F2	S2	D19	09X
ANALYZED ACCIDENT: Mixing of Incompatible Material - Toxic Vapor Generation								
C-1-a	XS-26-PRES XS-26-TEMP	DST vapor/aerosols	Release of toxic vapors from Tank 241-SY-102 due to chemical reaction	Mistransfer of incompatible waste causes chemical reaction	F3	S2	E06	11
HAZARDOUS CONDITIONS								
A-1-a	RCSTS-01-FLOW05	Ammonia liberated from mixing waste with a limited number of drums of relatively dilute caustic	Release of ammonia to atmosphere from a fire or a gas release resulting in an explosion due to addition of inadequately diluted caustic.	Human error	F2	S3	D01	11X
ANALYZED ACCIDENT: Mixing of Incompatible Material - Tank Pressurization								
B-1-a	I-222S-1-RXN-A	Aerosols and/or toxic vapors from receiver tank	Release of aerosols and/or toxic vapors from receiver tank due adverse chemical reactions from incompatible waste.	Transfer of incompatible waste	F3	S2	D01	12
HAZARDOUS CONDITIONS								
A-1-a	RCSTS-01-FLOW04	Amount of reactive chemicals in waste transferred (20,00 to 1,000,000 gallons)	Release of radioactive aerosols/entrained solids and/or toxic gases to the atmosphere from Tank 241-SY-102 due to chemical reaction.	Mistransfer of incompatible material from east area via the supernate piping route.	F2	S3	D01	12X
ANALYZED ACCIDENT: Flammable Gas Deflagrations								
A-1-a	ITK-10-b	DST tank inventory	Release of radioactive material from in-tank fire or explosion due to intrusive activity (Dome Collapse)	Spark from equipment or tools	F3	S3	B04	14A
A-1-a	XS-01-FLOW03	SST and DCRT tank contents	Release of liquids, solids, and/or vapors from single shell tank due to dome collapse and DCRT pressurization caused by flammable gas explosion/fire propagating from DCRT to single shell tank	Pipeline connecting single shell tank and DCRT fills with flammable gas; loss of ventilation flow in DCRT so that a flammable gas atmosphere is ignited by the ventilation outlet heater	F2	S3	B07	14B
HAZARDOUS CONDITIONS								

Table B-2. Analyzed Accidents and the Represented Hazardous Conditions. (25 sheets)

BIN	ID	Material at Risk	Hazardous Condition	Cause	Initial Freq NC	Initial Safety Cons NC	Cause Grp	BIO Acc
B-1-a	RCSTS-03-INTEG01	Aerosol fraction of supernate or slurry spill created by fire or explosion	Release of radioactive aerosols to the atmosphere from the SY valve pit due to fire or explosion of flammable gas.	Fire or explosion in the valve pit caused by buildup of flammable gas because of spill of supernate or slurry	F2	S2	B08	14X
B-1-a	RCSTS-03-INTEG02	Aerosol fraction of slurry spill created by fire or explosion	Release of radioactive aerosols to the atmosphere from the SY valve pit due to fire or explosion of flammable gas.	Fire or explosion due to leakage of flammable gas due to pipe breach in slurry line caused by gas release from slurry	F2	S2	B08	14X
C-2-b	RCSTS-08-INTEG03	Amount of slurry transferred (20,000 to 1,000,000 gallons)	Release of radioactive slurry to soil surface from overflow of diversion box due to piping system leak.	Flammable gas explosion from release of trapped flammable gas within pipe combined with ignition source	F2	S2	B08	14X
A-1-a	RCSTS-08-INTEG12	Aerosol fraction of supernate spill	Release of radioactive aerosols to the atmosphere from the 6241-A diversion box due to fire or explosion of flammable gas.	Fire or explosion in the diversion box caused by buildup of flammable gas because of spill of supernate to diversion box sump	F2	S3	B08	14X
C-2-b	RCSTS-09-INTEG05	Amount of slurry transferred (20,000 to 1,000,000 gallons)	Release of radioactive slurry to soil surface from overflow of vent station due to piping system leak.	Flammable gas explosion from release of trapped flammable gas within pipe combined with ignition source	F2	S2	B08	14X
B-1-a	RCSTS-09-INTEG06	Aerosol fraction of supernate spill	Release of radioactive aerosols to the atmosphere from the vent station due to fire or explosion of flammable gas.	Fire or explosion in the vent station caused by buildup of flammable gas because of spill of supernate or slurry to vent station	F2	S2	B08	14X
B-1-a	RCSTS-09-INTEG14	Amount of slurry transferred (20,000 to 1,000,000 gallons)	Release of radioactive aerosols to the atmosphere caused by spray leak of slurry from vent station due to piping system leak.	Flammable gas explosion from release of trapped flammable gas within pipe combined with ignition source	F2	S3	B08	14X
C-3-b	RCSTS-18/19-INTEG05	Amount of supernate transferred (20,000 to 1,000,000 gallons)	Release of radioactive slurry to the soil from the underground piping between the diversion box and the vent station due to piping system leak.	Failure of primary and encasement piping due to flammable gas explosion in primary piping	F2	S2	B08	14X
B-1-a	RCSTS-24-INTEG03	Aerosol fraction of supernate or slurry spill created by fire or explosion	Release of radioactive aerosols to the atmosphere from the lift station due to fire or explosion of flammable gas.	Fire or explosion in the lift station caused by buildup of flammable gas because of spill of supernate or slurry	F2	S2	B08	14X
B-1-a	RCSTS-24-INTEG06	Aerosol fraction of slurry spill created by fire or explosion	Release of radioactive aerosols to the atmosphere from the lift station due to fire or explosion of flammable gas.	Fire or explosion due to leakage of flammable gas due to pipe breach in slurry line caused by gas release from slurry	F2	S2	B08	14X

Table B-2. Analyzed Accidents and the Represented Hazardous Conditions. (25 sheets)

BIN	ID	Material at Risk	Hazardous Condition	Cause	Initial Freq NC	Initial Safety Cons NC	Cause Grp	BIO Acc
ANALYZED ACCIDENT: Surface Leak Resulting in Pool								
C-2-b	W058-PRES01	Amount of slurry transferred (20,000 to 1,000,000 gallons)	Release of radioactive slurry to the soil surface from overflow in the SY-A or SY-B valve pit due to piping system leak (Pool)	Water hammer plus mitigative features failure	F3	S2	D17	18
HAZARDOUS CONDITIONS								
C-2-b	RCSTS-01-FLOW03	Amount of supernate transferred (20,000 to 1,000,000 gallons)	Release of radioactive supernate to the soil surface from overflow of Tank 241-SY-102 tank due to mistransfer.	Mistransfer of material from east area via the supernate piping route.	F3	S2	D06	18X
C-2-b	RCSTS-03-FLOW/INTEG01	Amount of slurry transferred (20,000 to 1,000,000 gallons)	Release of radioactive slurry to the soil surface from overflow in the SY-A or SY-B valve pit due to piping system leak (pool).	Failure of jumper due to misalignment (human error).	F3	S2	E06	18X
C-2-b	RCSTS-03-FLOW/INTEG02a	Amount of supernate transferred (20,000 to 1,000,000 gallons)	Release of radioactive supernate to the soil surface from overflow in the SY-A or SY-B valve pit due to piping system leak (pool).	Failure of jumper due to misalignment (human error)	F3	S2	E06	18X
C-2-b	RCSTS-03-FLOW/INTEG02b	Amount of supernate transferred (20,000 to 1,000,000 gallons)	Release of radioactive supernate to the soil surface from overflow in the SY-A or SY-B valve pit due to piping system leak (pool).	Failure of jumper due to gasket failure	F2	S2	D12	18X
C-2-b	RCSTS-03-FLOW/INTEG02c	Amount of supernate transferred (20,000 to 1,000,000 gallons)	Release of radioactive supernate to the soil surface from overflow in the SY-A or SY-B valve pit due to piping system leak (pool).	Failure of jumper due to corrosion	F2	S2	D12	18X
C-2-b	RCSTS-03-FLOW02	Amount of slurry transferred (20,000 to 1,000,000 gallons)	Release of radioactive slurry to the soil surface from overflow in the SY-A or SY-B valve pit due to piping system leak (pool).	Computer failure or human error causing misrouting of material when flow path is not completely connected	F3	S2	E06	18X
C-2-b	RCSTS-03-FLOW03	Amount of slurry transferred (20,000 to 1,000,000 gallons)	Release of radioactive slurry to the soil surface from overflow in the SY-A or SY-B valve pit due to piping system leak (pool).	External leak of valve or valves to the valve pit	F2	S2	D12	18X
C-2-b	RCSTS-03-FLOW04	Amount of supernate transferred (20,000 to 1,000,000 gallons)	Release of radioactive supernate to the soil surface from overflow in the SY-A or SY-B valve pit due to piping system leak (pool).	Computer failure or human error causing misrouting of material when flow path is not completely connected	F3	S2	E06	18X
C-2-b	RCSTS-03-FLOW05	Amount of supernate transferred (20,000 to 1,000,000 gallons)	Release of radioactive supernate to the soil surface from overflow in the SY-A or SY-B valve pit due to piping system leak (pool).	External leak of valve or valves to the valve pit	F2	S2	D12	18X

Table B-2. Analyzed Accidents and the Represented Hazardous Conditions. (25 sheets)

BIN	ID	Material at Risk	Hazardous Condition	Cause	Initial Freq NC	Initial Safety Cons NC	Cause Grp	BIO Acc
C-2-b	RCSTS-03-INTEG05	Amount of slurry transferred (20,000 to 1,000,000 gallons)	Release of radioactive slurry to the soil surface from overflow in the SY-A or SY-B valve pit due to piping system leak.	External event (airplane crash, etc)	F0	S2	D23	18X
C-2-b	RCSTS-03-INTEG07	Amount of supernate transferred (20,000 to 1,000,000 gallons)	Release of radioactive supernate to the soil surface from overflow in the SY-A or SY-B valve pit due to piping system leak.	External event (airplane crash, etc)	F0	S2	D23	18X
C-2-b	RCSTS-03-PRES02	Amount of slurry transferred (20,000 to 1,000,000 gallons)	Release of radioactive slurry to the soil surface from overflow in the SY-A or SY-B valve pit due to piping system leak (pool).	Water hammer	F3	S2	D17	18X
C-2-b	RCSTS-03-PRES03	Amount of supernate transferred (20,000 to 1,000,000 gallons)	Release of radioactive supernate to the soil surface from overflow in the SY-A or SY-B valve pit due to piping system leak (pool).	Water hammer	F3	S2	D17	18X
C-2-b	RCSTS-08-FLOW03	Amount of supernate transferred (20,000 to 1,000,000 gallons)	Release of radioactive supernate to soil surface from overflow of diversion box due to piping system leak.	External leak of valve or valves to the diversion box	F3	S2	D12	18X
C-2-b	RCSTS-08-FLOW04	Amount of slurry transferred (20,000 to 1,000,000 gallons)	Release of radioactive slurry to soil surface from overflow of diversion box due to piping system leak.	External leak of valve or valves to the diversion box	F3	S2	D12	18X
C-2-b	RCSTS-08-FLOW05	Amount of supernate transferred (20,000 to 1,000,000 gallons)	Release of radioactive supernate to soil surface from overflow of diversion box due to piping system leak.	Backflow of supernate to sump pump line, through sump pump and onto diversion box floor	F3	S2	D06	18X
C-2-b	RCSTS-08-INTEG01	Amount of slurry transferred (20,000 to 1,000,000 gallons)	Release of radioactive slurry to soil surface from overflow of diversion box due to piping system leak.	Failure of piping due to corrosion	F2	S2	D16	18X
C-2-b	RCSTS-08-INTEG02	Amount of slurry transferred (20,000 to 1,000,000 gallons)	Release of radioactive slurry to soil surface from overflow of diversion box due to piping system leak.	External event (airplane crash, etc)	F0	S2	D23	18X
C-2-b	RCSTS-08-INTEG04	Amount of slurry transferred (20,000 to 1,000,000 gallons)	Release of radioactive slurry to soil surface from overflow of diversion box due to piping system leak.	Failure of piping due to material defect	F2	S2	D12	18X
C-2-b	RCSTS-08-INTEG05	Amount of slurry transferred (20,000 to 1,000,000 gallons)	Release of radioactive slurry to soil surface from overflow of diversion box due to piping system leak.	Slurry pump overspeed causing catastrophic failure of pump with missiles damaging pipe	F1	S2	D26	18X

Table B-2. Analyzed Accidents and the Represented Hazardous Conditions. (25 sheets)

BIN	ID	Material at Risk	Hazardous Condition	Cause	Initial Freq NC	Initial Safety Cons NC	Cause Grp	BIO Acc
C-2-b	RCSTS-08-INTEG17a	Amount of supernate transferred (20,000 to 1,000,000 gallons)	Release of radioactive supernate to the soil surface from overflow of diversion box due to piping system leak.	Failure of piping due to corrosion plus mitigative features failure	F2	S2	D06	18X
C-2-b	RCSTS-08-INTEG17b	Amount of supernate transferred (20,000 to 1,000,000 gallons)	Release of radioactive supernate to the soil surface from overflow of diversion box due to piping system leak.	Failure of piping due to unrecognized material flaw	F2	S2	D12	18X
C-2-b	RCSTS-08-INTEG18	Amount of supernate transferred (20,000 to 1,000,000 gallons)	Release of radioactive supernate to the soil surface from overflow of diversion box due to piping system leak.	Failure of piping due to external event (airplane crash, volcanism, etc)	F0	S2	D05	18X
C-2-b	RCSTS-08-PRES02	Amount of slurry transferred (20,000 to 1,000,000 gallons)	Release of radioactive slurry to soil surface from overflow of diversion box due to piping system leak.	Water hammer	F3	S2	D17	18X
C-2-b	RCSTS-08-PRES03	Amount of supernate transferred (20,000 to 1,000,000 gallons)	Release of radioactive supernate to soil surface from overflow of diversion box due to piping system leak.	Water hammer	F3	S2	D17	18X
C-2-b	RCSTS-08-TEMP01	Amount of slurry transferred (20,000 to 1,000,000 gallons)	Release of radioactive slurry to soil surface from overflow of diversion box due to piping system leak.	Freezing of piping within the diversion box due to cold temperatures caused by running the exhauster	F2	S2	D24	18X
C-2-b	RCSTS-08-TEMP04	Amount of supernate transferred (20,000 to 1,000,000 gallons)	Release of radioactive supernate to the soil surface from overflow of diversion box due to piping system leak.	Failure of piping due to freezing	F1	S2	D24	18X
C-2-b	RCSTS-09-FLOW01	Amount of slurry transferred (20,000 to 1,000,000 gallons)	Release of radioactive slurry to soil surface from overflow of vent station due to piping system leak.	Flow of slurry to vent station due to incomplete closing of vent valves after venting	F3	S2	D06	18X
C-2-b	RCSTS-09-FLOW04	Amount of slurry transferred (20,000 to 1,000,000 gallons)	Release of radioactive slurry to soil surface from overflow of vent station due to piping system leak.	External leak of valve or valves to the vent station	F3	S2	D12	18X
C-2-b	RCSTS-09-FLOW05	Amount of supernate transferred (20,000 to 1,000,000 gallons)	Release of radioactive supernate to soil surface from overflow of vent station due to piping system leak.	External leak of valve or valves to the vent station	F3	S2	D12	18X
C-2-b	RCSTS-09-FLOW06	Amount of supernate involved in a transfer (20,000 to 1,000,000 gallons)	Release of radioactive supernate to soil surface from overflow of vent station due to piping system leak.	Flow of supernate to vent station due to incomplete closing of vent valves after venting	F3	S2	D06	18X

Table B-2. Analyzed Accidents and the Represented Hazardous Conditions. (25 sheets)

BIN	ID	Material at Risk	Hazardous Condition	Cause	Initial Freq NC	Initial Safety Cons NC	Cause Grp	BIO Acc
C-2-b	RCSTS-09-FLOW07	Amount of supernate transferred (20,000 to 1,000,000 gallons)	Release of radioactive supernate to soil surface from overflow of vent station due to piping system leak.	Backflow of supernate to sump pump line, through sump pump and onto vent station floor	F3	S2	D06	18X
B-1-a	RCSTS-09-FLOW11	Amount of supernate transferred (20,000 to 1,000,000 gallons)	Release of radioactive supernate to soil surface from overflow of vent station due to piping system leak.	Backflow of supernate to sump pump line, through sump pump and onto vent station floor	F3	S3	D06	18X
C-2-b	RCSTS-09-INTEG01	Amount of slurry transferred (20,000 to 1,000,000 gallons)	Release of radioactive slurry to soil surface from overflow of vent station due to piping system leak.	Failure of piping due to corrosion	F2	S2	D16	18X
C-2-b	RCSTS-09-INTEG02	Amount of supernate transferred (20,000 to 1,000,000 gallons)	Release of radioactive supernate to soil surface from overflow of vent station due to piping system leak.	Failure of piping due to corrosion	F2	S2	D16	18X
C-2-b	RCSTS-09-INTEG03	Amount of slurry transferred (20,000 to 1,000,000 gallons)	Release of radioactive slurry to soil surface from overflow of vent station due to piping system leak.	External event (airplane crash, etc)	F0	S2	D23	18X
C-2-b	RCSTS-09-INTEG04	Amount of supernate transferred (20,000 to 1,000,000 gallons)	Release of radioactive supernate to soil surface from overflow of vent station due to piping system leak.	External event (airplane crash, etc)	F0	S2	D23	18X
C-2-b	RCSTS-09-INTEG07	Amount of slurry transferred (20,000 to 1,000,000 gallons)	Release of radioactive slurry to soil surface from overflow of vent station due to piping system leak.	Failure of piping due to material defect	F2	S2	D12	18X
C-2-b	RCSTS-09-INTEG08	Amount of supernate transferred (20,000 to 1,000,000 gallons)	Release of radioactive supernate to soil surface from overflow of vent station due to piping system leak.	Failure of piping due to material defect	F2	S2	D12	18X
C-2-b	RCSTS-09-PRES01	Amount of slurry transferred (20,000 to 1,000,000 gallons)	Release of radioactive slurry to soil surface from overflow of vent station due to piping system leak.	Water hammer	F3	S2	D17	18X
C-2-b	RCSTS-09-PRES02	Amount of supernate transferred (20,000 to 1,000,000 gallons)	Release of radioactive supernate to soil surface from overflow of vent station due to piping system leak.	Water hammer	F3	S2	D17	18X
C-2-b	RCSTS-09-TEMP01	Amount of slurry transferred (20,000 to 1,000,000 gallons)	Release of radioactive slurry to soil surface from overflow of vent station due to piping system leak.	Freezing of piping within the vent station due to cold temperatures caused by running the exhauster	F2	S2	D24	18X

Table B-2. Analyzed Accidents and the Represented Hazardous Conditions. (25 sheets)

BIN	ID	Material at Risk	Hazardous Condition	Cause	Initial Freq NC	Initial Safety Cons NC	Cause Grp	BIO Acc
C-2-b	RCSTS-09-TEMP02	Amount of supernate transferred (20,000 to 1,000,000 gallons)	Release of radioactive supernate to soil surface from overflow of vent station due to piping system leak.	Freezing of piping within the vent station due to cold temperatures caused by running the exhauster	F2	S2	D24	18X
C-2-b	RCSTS-15/16-INTEG03b	Amount of slurry transferred (20,000 to 1,000,000 gallons)	Release of radioactive slurry to the soil surface from overflow of diversion box due to piping system leak.	Failure of piping due to external event (undermining from broken fluid transfer lines in vicinity)	F2	S2	D12	18X
C-2-b	RCSTS-1FS-LEVEL03	Caustic water based solution mixed with radioactive material being transferred via cross site transfer line	Release of caustic solution and radionuclides to the sump pit from the water flush tank due to over filling of tank.	Overfilling of flush tank from flow of radioactive waste from transfer line. Block valves open, valve limit switch and pressure switch fail and administrative control of raw water block valves fail	F2	S2	D06	18X
B-2-b	RCSTS-22-PRESS03*	Amount of slurry transferrable through a pipe break	Release of radioactive supernate to soil surface from overflow of 244-A Lift Station due to piping break.	Dead heading of flow through the 244-A Lift Station with failure of PRV and subsequent downstream pipe failure	F3	S2	D12	18X
B-2-b	RCSTS-22-PRESS04*	Amount of supernate transferrable through a pipe break	Release of radioactive slurry to soil surface from overflow of 244-A Lift Station due to piping break.	Dead heading of flow through the 244-A Lift Station with failure of PRV and subsequent downstream pipe failure	F3	S2	D12	18X
C-2-b	RCSTS-24-FLOW/INTEG01	Amount of slurry transferred (20,000 to 1,000,000 gallons)	Release of radioactive slurry to soil surface from overflow of 244-A Lift Station due to piping system leak.	Failure of jumper due to corrosion	F2	S2	D16	18X
C-2-b	RCSTS-24-FLOW/INTEG02	Amount of supernate transferred (20,000 to 1,000,000 gallons)	Release of radioactive supernate to soil surface from overflow of 244-A Lift Station due to piping system leak.	Failure of jumper due to corrosion	F2	S2	D16	18X
C-2-b	RCSTS-24-FLOW/INTEG03	Amount of slurry transferred (20,000 to 1,000,000 gallons)	Release of radioactive slurry to soil surface from overflow of lift station due to piping system leak.	Failure of jumper due to gasket failure	F3	S2	D12	18X
C-2-b	RCSTS-24-FLOW/INTEG04	Amount of supernate transferred (20,000 to 1,000,000 gallons)	Release of radioactive supernate to soil surface from overflow of 244-A Lift Station due to piping system leak.	Failure of jumper due to gasket failure	F3	S2	D12	18X
C-2-b	RCSTS-24-FLOW/INTEG05	Amount of slurry transferred (20,000 to 1,000,000 gallons)	Release of radioactive slurry to soil surface from overflow of lift station due to piping system leak.	Failure of jumper due to misalignment	F3	S2	D06	18X
C-2-b	RCSTS-24-FLOW/INTEG06	Amount of supernate transferred (20,000 to 1,000,000 gallons)	Release of radioactive supernate to soil surface from overflow of 244-A Lift Station due to piping system leak.	Failure of jumper due to misalignment	F3	S2	D06	18X

Table B-2. Analyzed Accidents and the Represented Hazardous Conditions. (25 sheets)

BIN	ID	Material at Risk	Hazardous Condition	Cause	Initial Freq NC	Initial Safety Cons NC	Cause Grp	BIO Acc
C-2-b	RCSTS-24-FLOW01	Amount of slurry transferred (20,000 to 1,000,000 gallons)	Release of radioactive slurry to soil surface from overflow of lift station due to piping system leak.	Computer failure or human error causing misrouting of material when flow path is not completely connected	F3	S2	D06	18X
C-2-b	RCSTS-24-FLOW02	Amount of supernate transferred (20,000 to 1,000,000 gallons)	Release of radioactive supernate to soil surface from overflow of 244-A Lift Station due to piping system leak.	Computer failure or human error causing misrouting of material when flow path is not completely connected	F3	S2	D06	18X
C-2-b	RCSTS-24-FLOW03	Amount of slurry transferred (20,000 to 1,000,000 gallons)	Release of radioactive slurry to soil surface from overflow of lift station due to piping system leak.	External leak of valve or valves to the lift station	F3	S2	D12	18X
C-2-b	RCSTS-24-FLOW04	Amount of supernate transferred (20,000 to 1,000,000 gallons)	Release of radioactive supernate to soil surface from overflow of 244-A Lift Station due to piping system leak.	External leak of valve or valves to the lift station	F3	S2	D12	18X
C-2-b	RCSTS-24-INTEG01	Amount of slurry transferred (20,000 to 1,000,000 gallons)	Release of radioactive slurry to soil surface from overflow of lift station due to piping system leak.	External event (airplane crash, etc)	F0	S2	D23	18X
C-2-b	RCSTS-24-INTEG02	Amount of supernate transferred (20,000 to 1,000,000 gallons)	Release of radioactive supernate to soil surface from overflow of 244-A Lift Station due to piping system leak.	External event (airplane crash, etc)	F0	S2	D23	18X
C-2-b	RCSTS-24-PRES01	Amount of supernate transferred (20,000 to 1,000,000 gallons)	Release of radioactive supernate to soil surface from overflow of 244-A Lift Station due to piping system leak.	Steam hammer or thermal stress caused by loss of flushwater flow to steam mixing chamber in east area	F3	S2	D26	18X
C-2-b	RCSTS-24-PRES02	Amount of slurry transferred (20,000 to 1,000,000 gallons)	Release of radioactive slurry to soil surface from overflow of lift station due to piping system leak.	Water hammer	F3	S2	D17	18X
C-2-b	RCSTS-24-PRES03	Amount of supernate transferred (20,000 to 1,000,000 gallons)	Release of radioactive supernate to soil surface from overflow of 244-A Lift Station due to piping system leak.	Water hammer	F3	S2	D17	18X
ANALYZED ACCIDENT: Subsurface Leak Resulting in Pool								
B-3-b	XS-07-FLOW02	Liquid radioactive waste transferred out of DCRT	Release of radioactive waste to soil from transfer piping out of 244-TX DCRT due to leak in primary pipe and encasement	Corrosion of inner and outer pipe	F3	S2	D16	19A
B-3-b	XS-07-FLOW06	Liquid radioactive waste transferred out of DCRT	Release of radioactive waste to soil from transfer pipe out of 244-TX-DCRT due to leak in primary pipe and encasement	Water hammer causes failure of primary pipe and encasement	F3	S2	D17	19B

Table B-2. Analyzed Accidents and the Represented Hazardous Conditions. (25 sheets)

BIN	ID	Material at Risk	Hazardous Condition	Cause	Initial Freq NC	Initial Safety Cons NC	Cause Grp	BIO Acc
HAZARDOUS CONDITIONS								
C-2-b	RCSTS-04/05-INTEG01a	Amount of supernate transferred (20,000 to 1,000,000 gallons)	Release of radioactive supernate to the soil surface from the underground piping between the SY-A or SY-B valve pit and a diversion box due to piping system leak.	Failure of primary and encasement piping due to corrosion	F2	S2	D06	19X
C-2-b	RCSTS-04/05-INTEG01b	Amount of supernate transferred (20,000 to 1,000,000 gallons)	Release of radioactive supernate to the soil surface from the underground piping between the SY-A or SY-B valve pit and a diversion box due to piping system leak.	Failure of primary and encasement piping due to unrecognized material flaw	F2	S2	D12	19X
C-2-b	RCSTS-04/05-INTEG02	Amount of supernate transferred (20,000 to 1,000,000 gallons)	Release of radioactive supernate to the soil surface from the underground piping between the SY-A or SY-B valve pit and a diversion box due to piping system leak.	Failure of primary and encasement piping due to external event (airplane crash, volcanism, etc)	F0	S2	D05	19X
C-3-b	RCSTS-04/05-INTEG03	Amount of supernate transferred (20,000 to 1,000,000 gallons)	Release of radioactive supernate to the soil surface from the underground piping between the SY-A or SY-B valve pit and the diversion box due to piping system leak.	Failure of primary and encasement piping due to external event (excavation accident)	F3	S2	D22	19X
C-2-b	RCSTS-04/05-INTEG04	Amount of supernate transferred (20,000 to 1,000,000 gallons)	Release of radioactive supernate to the soil surface from the underground piping between the SY-A or SY-B valve pit and a diversion box due to piping system leak.	Failure of primary and encasement piping due to external event (undermining from broken fluid transfer lines in vicinity)	F2	S2	D12	19X
C-2-b	RCSTS-04/05-TEMP01	Amount of supernate transferred (20,000 to 1,000,000 gallons)	Release of radioactive supernate to the soil surface from the underground piping between the SY-A or SY-B valve pit and a diversion box due to piping system leak.	Failure of primary and encasement piping due to freezing	F1	S2	D24	19X
C-3-b	RCSTS-10/11-INTEG01	Amount of supernate transferred (20,000 to 1,000,000 gallons)	Release of radioactive supernate to the soil from the underground piping between the diversion box and the vent station due to piping system leak.	Failure of primary and encasement piping due to external event (undermining from broken fluid transfer lines in vicinity)	F3	S2	D19	19X
C-3-b	RCSTS-10/11-INTEG02a	Amount of supernate transferred (20,000 to 1,000,000 gallons)	Release of radioactive supernate to the soil from the underground piping between the diversion box and the vent station due to piping system leak.	Failure of primary and encasement piping due to corrosion	F2	S2	D16	19X

Table B-2. Analyzed Accidents and the Represented Hazardous Conditions. (25 sheets)

BIN	ID	Material at Risk	Hazardous Condition	Cause	Initial Freq NC	Initial Safety Cons NC	Cause Grp	BIO Acc
C-3-b	RCSTS-10/11-INTEG03a	Amount of supernate transferred (20,000 to 1,000,000 gallons)	Release of radioactive supernate to the soil from the underground piping between the diversion box and the vent station due to piping system leak.	Failure of primary and encasement piping due to external event (excavation accident)	F3	S2	D22	19X
C-3-b	RCSTS-10/11-INTEG04	Amount of supernate transferred (20,000 to 1,000,000 gallons)	Release of radioactive supernate to the soil from the underground piping between the diversion box and the vent station due to piping system leak.	Failure of primary and encasement piping due to external event (airplane crash, volcanism etc)	F0	S2	D23	19X
C-3-b	RCSTS-10/11-INTEG05a	Amount of supernate transferred (20,000 to 1,000,000 gallons)	Release of radioactive supernate to the soil from the underground piping between the diversion box and the vent station due to piping system leak.	Failure of primary and encasement piping due to unrecognized material flaw	F2	S2	D12	19X
C-3-b	RCSTS-10/11-PRES01a	Amount of supernate transferred (20,000 to 1,000,000 gallons)	Release of radioactive supernate to the soil from the underground piping between the diversion box and the vent station due to piping system leak.	Failure of primary and encasement piping due to water hammer	F3	S2	D17	19X
C-3-b	RCSTS-10/11-TEMP01	Amount of supernate transferred (20,000 to 1,000,000 gallons)	Release of radioactive supernate to the soil from the underground piping between the diversion box and the vent station due to piping system leak.	Failure of primary piping and encasement due to freezing	F1	S2	D24	19X
C-3-b	RCSTS-10/11-TEMP02	Amount of supernate transferred (20,000 to 1,000,000 gallons)	Release of radioactive supernate to the soil from the underground piping between the diversion box and the vent station due to piping system leak.	Failure of primary and encasement piping due to thermal stress	F3	S2	D26	19X
C-3-b	RCSTS-12/13-INTEG01	Amount of supernate transferred (20,000 to 1,000,000 gallons)	Release of radioactive supernate to the soil from the underground piping between the vent station and the 244-A Lift Station due to piping system leak.	Failure of primary and encasement piping due to external event (undermining from broken fluid transfer lines in vicinity)	F3	S2	D19	19X
C-3-b	RCSTS-12/13-INTEG02a	Amount of supernate transferred (20,000 to 1,000,000 gallons)	Release of radioactive supernate to the soil from the underground piping between the vent station and the 244-A Lift Station due to piping system leak.	Failure of primary and encasement piping due to corrosion	F2	S2	D16	19X
C-3-b	RCSTS-12/13-INTEG03a	Amount of supernate transferred (20,000 to 1,000,000 gallons)	Release of radioactive supernate to the soil from the underground piping between the vent station and the 244-A Lift Station due to piping system leak.	Failure of primary and encasement piping due to external event (excavation accident)	F3	S2	D22	19X

Table B-2. Analyzed Accidents and the Represented Hazardous Conditions. (25 sheets)

BIN	ID	Material at Risk	Hazardous Condition	Cause	Initial Freq NC	Initial Safety Cons NC	Cause Grp	BIO Acc
C-3-b	RCSTS-12/13-INTEGO4	Amount of supernate transferred (20,000 to 1,000,000 gallons)	Release of radioactive supernate to the soil from the underground piping between the vent station and the 244-A Lift Station due to piping system leak.	Failure of primary and encasement piping due to external event (airplane crash, volcanism etc)	F0	S2	D23	19X
C-3-b	RCSTS-12/13-INTEGO5a	Amount of supernate transferred (20,000 to 1,000,000 gallons)	Release of radioactive supernate to the soil from the underground piping between the vent station and the 244-A Lift Station due to piping system leak.	Failure of primary and encasement piping due to unrecognized material flaw	F2	S2	D12	19X
C-3-b	RCSTS-12/13-PRESO1a	Amount of supernate transferred (20,000 to 1,000,000 gallons)	Release of radioactive supernate to the soil from the underground piping between the vent station and the 244-A Lift Station due to piping system leak.	Failure of primary and encasement piping due to steam hammer caused by loss of flushwater flow to steam mixing chamber in east	F3	S2	D26	19X
C-3-b	RCSTS-12/13-PRESO2	Amount of supernate transferred (20,000 to 1,000,000 gallons)	Release of radioactive supernate to the soil from the underground piping between the vent station and the 244-A Lift Station due to piping system leak.	Failure of primary and encasement piping due to water hammer	F3	S2	D17	19X
C-3-b	RCSTS-12/13-TEMPO1	Amount of supernate transferred (20,000 to 1,000,000 gallons)	Release of radioactive supernate to the soil from the underground piping between the vent station and the 244-A Lift Station due to piping system leak.	Failure of primary piping and encasement due to freezing	F1	S2	D24	19X
C-3-b	RCSTS-12/13-TEMPO2	Amount of supernate transferred (20,000 to 1,000,000 gallons)	Release of radioactive supernate to the soil from the underground piping between the vent station and the 244-A Lift Station due to piping system leak.	Failure of primary and encasement piping due to thermal stress	F3	S2	D26	19X
C-2-b	RCSTS-15/16-INTEGO1a	Amount of slurry transferred (20,000 to 1,000,000 gallons)	Release of radioactive slurry to the soil surface from the underground piping between the SY-A or SY-B valve pit and a diversion box due to piping system leak.	Failure of primary and encasement piping due to corrosion	F2	S2	D12	19X
C-2-b	RCSTS-15/16-INTEGO1b	Amount of slurry transferred (20,000 to 1,000,000 gallons)	Release of radioactive slurry to the soil surface from the underground piping between the SY-A or SY-B valve pit and a diversion box due to piping system leak.	Failure of primary and encasement piping due to unrecognized material flaw	F2	S2	D12	19X

Table B-2. Analyzed Accidents and the Represented Hazardous Conditions. (25 sheets)

BIN	ID	Material at Risk	Hazardous Condition	Cause	Initial Freq NC	Initial Safety Cons NC	Cause Grp	BIO Acc
C-3-b	RCSTS-15/16-INTEGO2	Amount of slurry transferred (20,000 to 1,000,000 gallons)	Release of radioactive slurry to the soil surface from the underground piping between the SY-A or SY-B valve pit and the diversion box due to piping system leak.	Failure of primary and encasement piping due to external event (excavation accident)	F2	S2	D22	19X
C-2-b	RCSTS-15/16-INTEGO3a	Amount of slurry transferred (20,000 to 1,000,000 gallons)	Release of radioactive slurry to the soil surface from the underground piping between the SY-A or SY-B valve pit and a diversion box due to piping system leak.	Failure of primary and encasement piping due to external event (undermining from broken fluid transfer lines in vicinity)	F3	S2	D12	19X
C-2-b	RCSTS-15/16-INTEGO5	Amount of slurry transferred (20,000 to 1,000,000 gallons)	Release of radioactive slurry to the soil surface from the underground piping between the SY-A or SY-B valve pit and a diversion box due to piping system leak.	Failure of primary and encasement piping due to external event (airplane crash, volcanism, etc)	F0	S2	D05	19X
C-2-b	RCSTS-15/16-TEMP01	Amount of slurry transferred (20,000 to 1,000,000 gallons)	Release of radioactive slurry to the soil surface from the underground piping between the SY-A or SY-B valve pit and a diversion box due to piping system leak.	Failure of primary and encasement piping due to freezing	F1	S2	D24	19X
C-3-b	RCSTS-18/19-INTEGO1	Amount of supernate transferred (20,000 to 1,000,000 gallons)	Release of radioactive slurry to the soil from the underground piping between the diversion box and the vent station due to piping system leak.	Failure of primary and encasement piping due to external event (undermining from broken fluid transfer lines in vicinity)	F3	S2	D19	19X
C-3-b	RCSTS-18/19-INTEGO2	Amount of supernate transferred (20,000 to 1,000,000 gallons)	Release of radioactive slurry to the soil from the underground piping between the diversion box and the vent station due to piping system leak.	Failure of primary and encasement piping due to corrosion	F2	S2	D16	19X
C-3-b	RCSTS-18/19-INTEGO3a	Amount of supernate transferred (20,000 to 1,000,000 gallons)	Release of radioactive slurry to the soil from the underground piping between the diversion box and the vent station due to piping system leak.	Failure of primary and encasement piping due to external event (excavation accident)	F3	S2	D22	19X
C-3-b	RCSTS-18/19-INTEGO4	Amount of supernate transferred (20,000 to 1,000,000 gallons)	Release of radioactive slurry to the soil from the underground piping between the diversion box and the vent station due to piping system leak.	Failure of primary and encasement piping due to external event (airplane crash, volcanism etc)	F0	S2	D23	19X

Table B-2. Analyzed Accidents and the Represented Hazardous Conditions. (25 sheets)

BIN	ID	Material at Risk	Hazardous Condition	Cause	Initial Freq NC	Initial Safety Cons NC	Cause Grp	BIO Acc
C-3-b	RCSTS-18/19-INTEG06	Amount of supernate transferred (20,000 to 1,000,000 gallons)	Release of radioactive slurry to the soil from the underground piping between the diversion box and the vent station due to piping system leak.	Failure of primary and encasement piping due to unrecognized material flaw	F2	S2	D12	19X
C-3-b	RCSTS-18/19-PRES01	Amount of supernate transferred (20,000 to 1,000,000 gallons)	Release of radioactive slurry to the soil from the underground piping between the diversion box and the vent station due to piping system leak.	Failure of primary and encasement piping due to water hammer	F3	S2	D17	19X
C-3-b	RCSTS-18/19-TEMP01	Amount of supernate transferred (20,000 to 1,000,000 gallons)	Release of radioactive slurry to the soil from the underground piping between the diversion box and the vent station due to piping system leak.	Failure of primary piping and encasement due to freezing	F1	S2	D24	19X
C-3-b	RCSTS-18/19-TEMP02	Amount of supernate transferred (20,000 to 1,000,000 gallons)	Release of radioactive slurry to the soil from the underground piping between the diversion box and the vent station due to piping system leak.	Failure of primary and encasement piping due to thermal stress	F3	S2	D26	19X
ANALYZED ACCIDENT: Spray Leak in Structure or from Overground Waste Transfer Lines								
B-1-a	XS-06-FLOW02	DCRT waste being transferred to Tank 241-SY-102	Release of liquid radioactive waste from DCRT transfer piping to Tank 241-SY-102 due to spray leak in DCRT pump pit	Pipe failure in DCRT pump pit causing spray leak	F2	S3	D12	20
HAZARDOUS CONDITIONS								
B-1-a	RCSTS-03-FLOW/INTEG03a	Amount of slurry transferrable through a limited size orifice	Release of radioactive slurry aerosols to the atmosphere caused by spray leak of slurry from the SY-A or SY-B valve pit due to piping system leak.	Failure of jumper due to misalignment (human error)	F2	S3	E06	20X
B-1-a	RCSTS-03-FLOW/INTEG03b	Amount of slurry transferrable through a limited size orifice	Release of radioactive slurry aerosols to the atmosphere caused by spray leak of slurry from the SY-A or SY-B valve pit due to piping system leak.	Failure of jumper due to gasket failure	F2	S3	D12	20X
B-1-a	RCSTS-03-FLOW/INTEG03c	Amount of slurry transferrable through a limited size orifice	Release of radioactive slurry aerosols to the atmosphere caused by spray leak of slurry from the SY-A or SY-B valve pit due to piping system leak.	Failure of jumper due to corrosion	F2	S3	D16	20X

Table B-2. Analyzed Accidents and the Represented Hazardous Conditions. (25 sheets)

BIN	ID	Material at Risk	Hazardous Condition	Cause	Initial Freq NC	Initial Safety Cons NC	Cause Grp	BIO Acc
B-1-a	RCSTS-03-FLOW/INTEG04a	Amount of supernate transferrable through a limited size orifice	Release of radioactive supernate aerosols to the atmosphere caused by spray leak of supernate from the SY-A or SY-B valve pit due to piping system leak.	Failure of jumper due to misalignment (human error)	F2	S3	E06	20X
B-1-a	RCSTS-03-FLOW/INTEG04b	Amount of supernate transferrable through a limited size orifice	Release of radioactive supernate aerosols to the atmosphere caused by spray leak of supernate from the SY-A or SY-B valve pit due to piping system leak.	Failure of jumper due to gasket failure	F2	S3	D12	20X
B-1-a	RCSTS-03-FLOW/INTEG04c	Amount of supernate transferrable through a limited size orifice	Release of radioactive supernate aerosols to the atmosphere caused by spray leak of supernate from the SY-A or SY-B valve pit due to piping system leak.	Failure of jumper due to corrosion	F2	S3	D16	20X
B-1-a	RCSTS-03-FLOW06	Amount of slurry transferrable through a limited size orifice	Release of radioactive slurry aerosols to the atmosphere caused by spray leak of slurry from the SY-A or SY-B valve pit due to piping system leak.	Computer failure or human error causing misrouting of material when flow path is not completely connected	F2	S3	E06	20X
B-1-a	RCSTS-03-FLOW07	Amount of slurry transferrable through a limited size orifice	Release of radioactive slurry aerosols to the atmosphere caused by spray leak of slurry from the SY-A or SY-B valve pit due to piping system leak.	External leak of valve or valves to the valve pit	F2	S3	D12	20X
B-1-a	RCSTS-03-FLOW08	Amount of supernate transferrable through a limited size orifice	Release of radioactive supernate aerosols to the atmosphere caused by spray leak of supernate from the SY-A or SY-B valve pit due to piping system leak.	Computer failure or human error causing misrouting of material when flow path is not completely connected	F2	S3	E06	20X
B-1-a	RCSTS-03-INTEG03	Amount of supernate transferrable through a limited size orifice	Release of radioactive supernate aerosols to the atmosphere caused by spray leak of supernate from the SY-A or SY-B valve pit due to piping system leak.	External leak of valve or valves to the valve pit	F2	S3	D12	20X
B-1-a	RCSTS-03-INTEG09	Amount of slurry transferrable through a limited size orifice	Release of radioactive slurry aerosols to the atmosphere caused by spray leak of slurry from the SY-A or SY-B valve pit due to piping system leak.	External event (airplane crash, etc)	F0	S3	D23	20X
B-1-a	RCSTS-03-INTEG11	Amount of supernate transferrable through a limited size orifice	Release of radioactive supernate aerosols to the atmosphere caused by spray leak of supernate from the SY-A or SY-B valve pit due to piping system leak.	External event (airplane crash, etc)	F0	S3	D23	20X

Table B-2. Analyzed Accidents and the Represented Hazardous Conditions. (25 sheets)

BIN	ID	Material at Risk	Hazardous Condition	Cause	Initial Freq NC	Initial Safety Cons NC	Cause Grp	BIO Acc
B-1-a	RCSTS-08-FLOW08	Amount of slurry transferred (20,000 to 1,000,000 gallons)	Release of radioactive aerosols to the atmosphere caused by spray leak of slurry from diversion box due to piping system leak.	External leak of valve or valves to the diversion box	F3	S3	D12	20X
B-1-a	RCSTS-08-INTEG08	Amount of slurry transferred (20,000 to 1,000,000 gallons)	Release of radioactive aerosols to the atmosphere caused by spray leak of slurry from diversion box due to piping system leak.	Failure of piping due to corrosion	F2	S3	D16	20X
B-1-a	RCSTS-08-INTEG09	Amount of slurry transferred (20,000 to 1,000,000 gallons)	Release of radioactive aerosols to the atmosphere caused by spray leak of slurry from diversion box due to piping system leak.	External event (airplane crash, etc)	F0	S3	D23	20X
B-1-a	RCSTS-08-INTEG10	Amount of supernate transferred (20,000 to 1,000,000 gallons)	Release of radioactive aerosols to the atmosphere caused by spray leak of supernate from diversion box due to piping system leak.	External event (airplane crash, etc)	F0	S3	D23	20X
B-1-a	RCSTS-08-INTEG11	Amount of slurry transferred (20,000 to 1,000,000 gallons)	Release of radioactive aerosols to the atmosphere caused by spray leak of slurry from diversion box due to piping system leak.	Flammable gas explosion from release of trapped flammable gas within pipe combined with ignition source	F2	S3	B08	20X
B-1-a	RCSTS-08-INTEG13	Amount of slurry transferred (20,000 to 1,000,000 gallons)	Release of radioactive aerosols to the atmosphere caused by spray leak of slurry from diversion box due to piping system leak.	Failure of piping due to material defect	F2	S3	D12	20X
B-1-a	RCSTS-08-INTEG14	Amount of slurry transferred (20,000 to 1,000,000 gallons)	Release of radioactive aerosols to the atmosphere caused by spray leak of slurry from diversion box due to piping system leak.	Slurry pump overspeed causing catastrophic failure of pump with missiles damaging pipe and challenging diversion box confinement	F1	S3	D26	20X
B-1-a	RCSTS-08-PRES04	Amount of slurry transferred (20,000 to 1,000,000 gallons)	Release of radioactive aerosols to the atmosphere caused by spray leak of slurry from diversion box due to piping system leak.	Water hammer	F3	S3	D17	20X
B-1-a	RCSTS-08-PRES05	Amount of supernate transferred (20,000 to 1,000,000 gallons)	Release of radioactive aerosols to the atmosphere caused by spray leak of supernate from diversion box due to piping system leak.	Water hammer	F3	S3	D17	20X

Table B-2. Analyzed Accidents and the Represented Hazardous Conditions. (25 sheets)

BIN	ID	Material at Risk	Hazardous Condition	Cause	Initial Freq NC	Initial Safety Cons NC	Cause Grp	BIO Acc
B-1-a	RCSTS-08-TEMP02	Amount of slurry transferred (20,000 to 1,000,000 gallons)	Release of radioactive aerosols to the atmosphere caused by spray leak of slurry from diversion box due to piping system leak.	Freezing of piping within the diversion box due to cold temperatures caused by running the exhauster	F2	S3	D24	20X
B-1-a	RCSTS-08-TEMP03	Amount of supernate transferred (20,000 to 1,000,000 gallons)	Release of radioactive aerosols to the atmosphere caused by spray leak of supernate from diversion box due to piping system leak.	Freezing of piping within the diversion box due to cold temperatures caused by running the exhauster	F2	S3	D24	20X
B-1-a	RCSTS-09-FLOW10	Amount of slurry transferred (20,000 to 1,000,000 gallons)	Release of radioactive aerosols to the atmosphere caused by spray leak of slurry from vent station due to piping system leak.	External leak of valve or valves to the vent station	F3	S3	D12	20X
B-1-a	RCSTS-09-INTEG11	Amount of slurry transferred (20,000 to 1,000,000 gallons)	Release of radioactive aerosols to the atmosphere caused by spray leak of slurry from vent station due to piping system leak.	Failure of piping due to corrosion	F2	S3	D16	20X
B-1-a	RCSTS-09-INTEG12	Amount of slurry transferred (20,000 to 1,000,000 gallons)	Release of radioactive aerosols to the atmosphere caused by spray leak of slurry from vent station due to piping system leak.	External event (airplane crash, etc)	F0	S3	D23	20X
B-1-a	RCSTS-09-INTEG13	Amount of supernate transferred (20,000 to 1,000,000 gallons)	Release of radioactive aerosols to the atmosphere caused by spray leak of supernate from vent station due to piping system leak.	External event (airplane crash, etc)	F0	S3	D23	20X
B-1-a	RCSTS-09-INTEG15	Amount of slurry transferred (20,000 to 1,000,000 gallons)	Release of radioactive aerosols to the atmosphere caused by spray leak of slurry from vent station due to piping system leak.	Failure of piping due to material defect	F2	S3	D12	20X
B-1-a	RCSTS-09-PRES04	Amount of slurry transferred (20,000 to 1,000,000 gallons)	Release of radioactive aerosols to the atmosphere caused by spray leak of slurry from vent station due to piping system leak.	Water hammer	F3	S3	D17	20X
B-1-a	RCSTS-09-PRES05	Amount of supernate transferred (20,000 to 1,000,000 gallons)	Release of radioactive aerosols to the atmosphere caused by spray leak of supernate from vent station due to piping system leak.	Water hammer	F3	S3	D17	20X

Table B-2. Analyzed Accidents and the Represented Hazardous Conditions. (25 sheets)

BIN	ID	Material at Risk	Hazardous Condition	Cause	Initial Freq NC	Initial Safety Cons NC	Cause Grp	BIO Acc
B-1-a	RCSTS-09-TEMP03	Amount of slurry transferred (20,000 to 1,000,000 gallons)	Release of radioactive aerosols to the atmosphere caused by spray leak of slurry from vent station due to piping system leak.	Freezing of piping within the vent station due to cold temperatures caused by running the exhauster	F2	S3	D24	20X
B-1-a	RCSTS-09-TEMP04	Amount of supernate transferred (20,000 to 1,000,000 gallons)	Release of radioactive aerosols to the atmosphere caused by spray leak of supernate from vent station due to piping system leak.	Freezing of piping within the vent station due to cold temperatures caused by running the exhauster	F2	S3	D24	20X
B-1-a	RCSTS-22-PRESS01*	Amount of slurry transferrable through a limited size orifice	Release of radioactive aerosols to the atmosphere caused by spray leak of slurry from 244-A Lift Station due to piping system leak.	Dead heading of flow through the 244-A Lift Station with failure of PRV and development of crack in downstream piping	F3	S3	D12	20X
B-1-a	RCSTS-22-PRESS02*	Amount of supernate transferrable through a limited size orifice	Release of radioactive aerosols to the atmosphere caused by spray leak of supernate from 244-A Lift Station due to piping system leak.	Dead heading of flow through the 244-A Lift Station with failure of PRV and development of crack in downstream piping	F3	S3	D12	20X
B-1-a	RCSTS-24-FLOW/INTEG07	Amount of slurry transferrable through a limited size orifice	Release of radioactive aerosols to the atmosphere caused by spray leak of slurry from lift station due to piping system leak.	Failure of jumper due to corrosion	F2	S3	D16	20X
B-1-a	RCSTS-24-FLOW/INTEG08	Amount of supernate transferrable through a limited size orifice	Release of radioactive aerosols to the atmosphere caused by spray leak of supernate from lift station due to piping system leak.	Failure of jumper due to corrosion	F2	S3	D16	20X
B-1-a	RCSTS-24-FLOW/INTEG09	Amount of slurry transferrable through a limited size orifice	Release of radioactive aerosols to the atmosphere caused by spray leak of slurry from lift station due to piping system leak.	Failure of jumper due to gasket failure	F3	S3	D12	20X
B-1-a	RCSTS-24-FLOW/INTEG10	Amount of supernate transferrable through a limited size orifice	Release of radioactive aerosols to the atmosphere caused by spray leak of supernate from lift station due to piping system leak.	Failure of jumper due to gasket failure	F3	S3	D12	20X
B-1-a	RCSTS-24-FLOW/INTEG11	Amount of slurry transferrable through a limited size orifice	Release of radioactive aerosols to the atmosphere caused by spray leak of slurry from lift station due to piping system leak.	Failure of jumper due to misalignment	F3	S3	D06	20X

Table B-2. Analyzed Accidents and the Represented Hazardous Conditions. (25 sheets)

BIN	ID	Material at Risk	Hazardous Condition	Cause	Initial Freq NC	Initial Safety Cons NC	Cause Grp	BIO Acc
B-1-a	RCSTS-24-FLOW/INTEG12	Amount of supernate transferrable through a limited size orifice	Release of radioactive aerosols to the atmosphere caused by spray leak of supernate from lift station due to piping system leak.	Failure of jumper due to misalignment	F3	S3	D06	20X
B-1-a	RCSTS-24-FLOW05	Amount of slurry transferrable through a limited size orifice	Release of radioactive aerosols to the atmosphere caused by spray leak of slurry from lift station due to piping system leak.	Computer failure or human error causing misrouting of material when flow path is not completely connected	F3	S3	D06	20X
B-1-a	RCSTS-24-FLOW06	Amount of supernate transferrable through a limited size orifice	Release of radioactive aerosols to the atmosphere caused by spray leak of supernate from lift station due to piping system leak.	Computer failure or human error causing misrouting of material when flow path is not completely connected	F3	S3	D06	20X
B-1-a	RCSTS-24-FLOW07	Amount of slurry transferrable through a limited size orifice	Release of radioactive aerosols to the atmosphere caused by spray leak of slurry from lift station due to piping system leak.	External leak of valve or valves to the lift station	F3	S3	D12	20X
B-1-a	RCSTS-24-FLOW08	Amount of supernate transferrable through a limited size orifice	Release of radioactive aerosols to the atmosphere caused by spray leak of supernate from lift station due to piping system leak.	External leak of valve or valves to the lift station	F3	S3	D12	20X
B-1-a	RCSTS-24-INTEG07	Amount of slurry transferrable through a limited size orifice	Release of radioactive aerosols to the atmosphere caused by spray leak of slurry from lift station due to piping system leak.	External event (airplane crash, etc)	F0	S3	D23	20X
B-1-a	RCSTS-24-INTEG08	Amount of supernate transferrable through a limited size orifice	Release of radioactive aerosols to the atmosphere caused by spray leak of supernate from lift station due to piping system leak.	External event (airplane crash, etc)	F0	S3	D23	20X
ANALYZED ACCIDENT: Spray Leak from Underground Waste Transfer Lines								
B-1-a	EE-16	Material leaked from transfer line	Release of radioactive and hazardous material from transfer line spray leak due to excavation error	Excavation into waste transfer line during a transfer	F3	S3	D22	21
HAZARDOUS CONDITIONS								
B-1-a	RCSTS-10/11-INTEG03b*	Amount of supernate transferred (20,000 to 1,000,000 gallons)	Release of radioactive supernate to the atmosphere from the underground piping between the diversion box and the vent station due to excavation of piping system and subsequent leak.	Failure of primary and encasement piping due to external event (excavation accident)	F3	S2	D22	21X

Table B-2. Analyzed Accidents and the Represented Hazardous Conditions. (25 sheets)

BIN	ID	Material at Risk	Hazardous Condition	Cause	Initial Freq NC	Initial Safety Cons NC	Cause Grp	BIO Acc
B-1-a	RCSTS-12/13-INTEG03b*	Amount of supernate transferred (20,000 to 1,000,000 gallons)	Release of radioactive supernate to the atmosphere from the underground piping between the vent station and the 244-A Lift Station due to excavation of piping system and subsequent leak.	Failure of primary and encasement piping due to external event (excavation accident)	F3	S2	D22	21X
B-1-a	RCSTS-18/19-INTEG03b*	Amount of supernate transferred (20,000 to 1,000,000 gallons)	Release of radioactive slurry to the atmosphere from the underground piping between the diversion box and the vent station due to excavation of piping system and subsequent leak.	Failure of primary and encasement piping due to external event (excavation accident)	F3	S2	D22	21X
ANALYZED ACCIDENT: Natural Phenomena - Seismic								
B-1-a	NP-07	Multiple tanks and ventilation systems inventories, 204-AR tanker spill	Radioactive and hazardous material releases from tanks and ventilation systems due to seismic event	Earthquake collapses domes	F1	S3	D18	25
HAZARDOUS CONDITIONS								
B-1-a	RCSTS-03-INTEG04	Amount of supernate transferrable through a limited size orifice	Release of radioactive supernate aerosols to the atmosphere caused by spray leak of supernate from the SY-A or SY-B valve pit due to piping system leak.	Seismic event	F1	S3	D18	25X
C-2-b	RCSTS-03-INTEG06	Amount of slurry transferred (20,000 to 1,000,000 gallons)	Release of radioactive slurry to the soil surface from overflow in the SY-A or SY-B valve pit due to piping system leak.	Seismic event	F1	S2	D18	25X
C-2-b	RCSTS-03-INTEG08	Amount of supernate transferred (20,000 to 1,000,000 gallons)	Release of radioactive supernate to the soil surface from overflow in the SY-A or SY-B valve pit due to piping system leak (pool).	Seismic event	F1	S2	D18	25X
B-1-a	RCSTS-03-INTEG10	Amount of slurry transferrable through a limited size orifice	Release of radioactive slurry aerosols to the atmosphere caused by spray leak of slurry from the SY-A or SY-B valve pit due to piping system leak.	Seismic event	F1	S3	D18	25X
C-2-b	RCSTS-04/05-INTEG05	Amount of supernate transferred (20,000 to 1,000,000 gallons)	Release of radioactive supernate to the soil surface from the underground piping between the SY-A or SY-B valve pit and a diversion box due to piping system leak.	Failure of primary and encasement piping due to seismic event	F1	S2	D18	25X

Table B-2. Analyzed Accidents and the Represented Hazardous Conditions. (25 sheets)

BIN	ID	Material at Risk	Hazardous Condition	Cause	Initial Freq NC	Initial Safety Cons NC	Cause Grp	BIO Acc
C-2-b	RCSTS-08-INTEG06	Amount of slurry transferred (20,000 to 1,000,000 gallons)	Release of radioactive slurry to soil surface from overflow of diversion box due to piping system leak.	Seismic event	F1	S2	D18	25X
C-2-b	RCSTS-08-INTEG07	Amount of supernate transferred (20,000 to 1,000,000 gallons)	Release of radioactive supernate to soil surface from overflow of diversion box due to piping system leak.	Seismic event	F1	S2	D18	25X
B-1-a	RCSTS-08-INTEG15	Amount of slurry transferred (20,000 to 1,000,000 gallons)	Release of radioactive aerosols to the atmosphere caused by spray leak of slurry from diversion box due to piping system leak.	Seismic event	F1	S3	D18	25X
B-1-a	RCSTS-08-INTEG16	Amount of supernate transferred (20,000 to 1,000,000 gallons)	Release of radioactive aerosols to the atmosphere caused by spray leak of supernate from diversion box due to piping system leak.	Seismic event	F1	S3	D18	25X
C-2-b	RCSTS-09-INTEG09	Amount of slurry transferred (20,000 to 1,000,000 gallons)	Release of radioactive slurry to soil surface from overflow of vent station due to piping system leak.	Seismic event	F1	S2	D18	25X
C-2-b	RCSTS-09-INTEG10	Amount of supernate transferred (20,000 to 1,000,000 gallons)	Release of radioactive supernate to soil surface from overflow of vent station due to piping system leak.	Seismic event	F1	S2	D18	25X
B-1-a	RCSTS-09-INTEG16	Amount of slurry transferred (20,000 to 1,000,000 gallons)	Release of radioactive aerosols to the atmosphere caused by spray leak of slurry from vent station due to piping system leak.	Seismic event	F1	S3	D18	25X
B-1-a	RCSTS-09-INTEG17	Amount of supernate transferred (20,000 to 1,000,000 gallons)	Release of radioactive aerosols to the atmosphere caused by spray leak of supernate from vent station due to piping system leak.	Seismic event	F1	S3	D18	25X
C-3-b	RCSTS-10/11-INTEG06	Amount of supernate transferred (20,000 to 1,000,000 gallons)	Release of radioactive supernate to the soil from the underground piping between the diversion box and the vent station due to piping system leak.	Failure of primary and encasement piping due to seismic event	F1	S2	D18	25X
C-3-b	RCSTS-12/13-INTEG06	Amount of supernate transferred (20,000 to 1,000,000 gallons)	Release of radioactive supernate to the soil from the underground piping between the vent station and the 244-A Lift Station due to piping system leak.	Failure of primary and encasement piping due to seismic event	F1	S2	D18	25X

Table B-2. Analyzed Accidents and the Represented Hazardous Conditions. (25 sheets)

BIN	ID	Material at Risk	Hazardous Condition	Cause	Initial Freq NC	Initial Safety Cons NC	Cause Grp	BIO Acc
C-2-b	RCSTS-15/16-INTEG04	Amount of slurry transferred (20,000 to 1,000,000 gallons)	Release of radioactive slurry to the soil surface from the underground piping between the SY-A or SY-B valve pit and the diversion box due to piping system leak.	Failure of primary and encasement piping due to seismic event	F1	S2	D18	25X
C-3-b	RCSTS-18/19-INTEG07	Amount of supernate transferred (20,000 to 1,000,000 gallons)	Release of radioactive slurry to the soil from the underground piping between the diversion box and the vent station due to piping system leak.	Failure of primary and encasement piping due to seismic event	F1	S2	D18	25X
C-2-b	RCSTS-24-INTEG04	Amount of slurry transferred (20,000 to 1,000,000 gallons)	Release of radioactive slurry to soil surface from overflow of lift station due to piping system leak.	Seismic event	F1	S2	D18	25X
C-2-b	RCSTS-24-INTEG05	Amount of supernate transferred (20,000 to 1,000,000 gallons)	Release of radioactive supernate to soil surface from overflow of 244-A Lift Station due to piping system leak.	Seismic event	F1	S2	D18	25X
B-1-a	RCSTS-24-INTEG09	Amount of slurry transferrable through a limited size orifice	Release of radioactive aerosols to the atmosphere caused by spray leak of slurry from lift station due to piping system leak.	Seismic event	F1	S3	D18	25X
B-1-a	RCSTS-24-INTEG10	Amount of supernate transferrable through a limited size orifice	Release of radioactive aerosols to the atmosphere caused by spray leak of supernate from lift station due to piping system leak.	Seismic event	F1	S3	D18	25X

CPS = criticality prevention specifications.
DCRT = double-contained receiver tank.
DST = double-shell tank.
HEPA = high-efficiency particulate air (filter).
MISF = miscellaneous inactive storage facility.
NC = no controls.
SST = single-shell tank.

This page intentionally left blank.

APPENDIX C

HAZARDS EVALUATIONS RESULTS

This page intentionally left blank.

LIST OF TABLES

C-1 Hazardous Conditions With Potential Significant Offsite Consequences (S3) C-1-1

C-2 Hazardous Conditions With Potential Significant Onsite Consequences (S2) C-2-1

C-3 Hazardous Conditions With Potential Significant Worker Consequences (S1) C-3-1

C-4 Hazardous Conditions with Potential Severe Environmental Consequences (E2 and E3) C-4-1

C-5 Hazardous Conditions With Potential Radiation Exposure Consequences (RP) C-5-1

C-6 Hazardous Conditions With Potential Occupational Safety Consequences (OCC) C-6-1

This page intentionally left blank.

Table C-1. Hazardous Conditions With Potential Significant Offsite Consequences (S3). (5 sheets)

ID	Hazardous Conditions	Cause	Freq NC	Env Cons
RCSTS-01-FLOW04	Release of radioactive aerosols/entrained solids and/or toxic gases to the atmosphere from Tank 241-SY-102 due to chemical reaction.	Mistransfer of incompatible material from east area via the supernate piping route.	F2	E3
RCSTS-01-FLOW05	Release of ammonia to atmosphere from a fire or a gas release resulting in an explosion due to addition of inadequately diluted caustic.	Human error	F2	E3
RCSTS-03-FLOW/INTEG03a	Release of radioactive slurry aerosols to the atmosphere caused by spray leak of slurry from the SY-A or SY-B valve pit due to piping system leak.	Failure of jumper due to misalignment (human error)	F2	E3
RCSTS-03-FLOW/INTEG03b	Release of radioactive slurry aerosols to the atmosphere caused by spray leak of slurry from the SY-A or SY-B valve pit due to piping system leak.	Failure of jumper due to gasket failure	F2	E3
RCSTS-03-FLOW/INTEG03c	Release of radioactive slurry aerosols to the atmosphere caused by spray leak of slurry from the SY-A or SY-B valve pit due to piping system leak.	Failure of jumper due to corrosion	F2	E3
RCSTS-03-FLOW/INTEG04a	Release of radioactive supernate aerosols to the atmosphere caused by spray leak of supernate from the SY-A or SY-B valve pit due to piping system leak.	Failure of jumper due to misalignment (human error)	F2	E3
RCSTS-03-FLOW/INTEG04b	Release of radioactive supernate aerosols to the atmosphere caused by spray leak of supernate from the SY-A or SY-B valve pit due to piping system leak.	Failure of jumper due to gasket failure	F2	E3
RCSTS-03-FLOW/INTEG04c	Release of radioactive supernate aerosols to the atmosphere caused by spray leak of supernate from the SY-A or SY-B valve pit due to piping system leak.	Failure of jumper due to corrosion	F2	E3
RCSTS-03-FLOW06	Release of radioactive slurry aerosols to the atmosphere caused by spray leak of slurry from the SY-A or SY-B valve pit due to piping system leak.	Computer failure or human error causing misrouting of material when flow path is not completely connected	F2	E3
RCSTS-03-FLOW07	Release of radioactive slurry aerosols to the atmosphere caused by spray leak of slurry from the SY-A or SY-B valve pit due to piping system leak.	External leak of valve or valves to the valve pit	F2	E3
RCSTS-03-FLOW08	Release of radioactive supernate aerosols to the atmosphere caused by spray leak of supernate from the SY-A or SY-B valve pit due to piping system leak.	Computer failure or human error causing misrouting of material when flow path is not completely connected	F2	E3
RCSTS-03-INTEG03	Release of radioactive supernate aerosols to the atmosphere caused by spray leak of supernate from the SY-A or SY-B valve pit due to piping system leak.	External leak of valve or valves to the valve pit	F2	E3

Table C-1. Hazardous Conditions With Potential Significant Offsite Consequences (S3). (5 sheets)

ID	Hazardous Conditions	Cause	Freq NC	Env Cons
RCSTS-03-INTEG04	Release of radioactive supernate aerosols to the atmosphere caused by spray leak of supernate from the SY-A or SY-B valve pit due to piping system leak.	Seismic event	F1	E3
RCSTS-03-INTEG09	Release of radioactive slurry aerosols to the atmosphere caused by spray leak of slurry from the SY-A or SY-B valve pit due to piping system leak.	External event (airplane crash, etc)	FO	E3
RCSTS-03-INTEG10	Release of radioactive slurry aerosols to the atmosphere caused by spray leak of slurry from the SY-A or SY-B valve pit due to piping system leak.	Seismic event	F1	E3
RCSTS-03-INTEG11	Release of radioactive supernate aerosols to the atmosphere caused by spray leak of supernate from the SY-A or SY-B valve pit due to piping system leak.	External event (airplane crash, etc)	FO	E3
RCSTS-08-FLOW08	Release of radioactive aerosols to the atmosphere caused by spray leak of slurry from diversion box due to piping system leak.	External leak of valve or valves to the diversion box	F3	E3
RCSTS-08-INTEG08	Release of radioactive aerosols to the atmosphere caused by spray leak of slurry from diversion box due to piping system leak.	Failure of piping due to corrosion	F2	E3
RCSTS-08-INTEG09	Release of radioactive aerosols to the atmosphere caused by spray leak of slurry from diversion box due to piping system leak.	External event (airplane crash, etc)	FO	E3
RCSTS-08-INTEG10	Release of radioactive aerosols to the atmosphere caused by spray leak of supernate from diversion box due to piping system leak.	External event (airplane crash, etc)	FO	E3
RCSTS-08-INTEG11	Release of radioactive aerosols to the atmosphere caused by spray leak of slurry from diversion box due to piping system leak.	Flammable gas explosion from release of trapped flammable gas within pipe combined with ignition source	F2	E3
RCSTS-08-INTEG12	Release of radioactive aerosols to the atmosphere from the 6241-A diversion box due to fire or explosion of flammable gas.	Fire or explosion in the diversion box caused by buildup of flammable gas because of spill of supernate to diversion box sump	F2	E3
RCSTS-08-INTEG13	Release of radioactive aerosols to the atmosphere caused by spray leak of slurry from diversion box due to piping system leak.	Failure of piping due to material defect	F2	E3
RCSTS-08-INTEG14	Release of radioactive aerosols to the atmosphere caused by spray leak of slurry from diversion box due to piping system leak.	Slurry pump overspeed causing catastrophic failure of pump with missiles damaging pipe and challenging diversion box confinement	F1	E3

Table C-1. Hazardous Conditions With Potential Significant Offsite Consequences (S3). (5 sheets)

ID	Hazardous Conditions	Cause	Freq NC	Env Cons
RCSTS-08-INTEG15	Release of radioactive aerosols to the atmosphere caused by spray leak of slurry from diversion box due to piping system leak.	Seismic event	F1	E3
RCSTS-08-INTEG16	Release of radioactive aerosols to the atmosphere caused by spray leak of supernate from diversion box due to piping system leak.	Seismic event	F1	E3
RCSTS-08-PRES04	Release of radioactive aerosols to the atmosphere caused by spray leak of slurry from diversion box due to piping system leak.	Water hammer	F3	E3
RCSTS-08-PRES05	Release of radioactive aerosols to the atmosphere caused by spray leak of supernate from diversion box due to piping system leak.	Water hammer	F3	E3
RCSTS-08-TEMP02	Release of radioactive aerosols to the atmosphere caused by spray leak of slurry from diversion box due to piping system leak.	Freezing of piping within the diversion box due to cold temperatures caused by running the exhauster	F2	E3
RCSTS-08-TEMP03	Release of radioactive aerosols to the atmosphere caused by spray leak of supernate from diversion box due to piping system leak.	Freezing of piping within the diversion box due to cold temperatures caused by running the exhauster	F2	E3
RCSTS-09-FLOW10	Release of radioactive aerosols to the atmosphere caused by spray leak of slurry from vent station due to piping system leak.	External leak of valve or valves to the vent station	F3	E3
RCSTS-09-FLOW11	Release of radioactive supernate to soil surface from overflow of vent station due to piping system leak.	Backflow of supernate to sump pump line, through sump pump and onto vent station floor	F3	E3
RCSTS-09-INTEG11	Release of radioactive aerosols to the atmosphere caused by spray leak of slurry from vent station due to piping system leak.	Failure of piping due to corrosion	F2	E3
RCSTS-09-INTEG12	Release of radioactive aerosols to the atmosphere caused by spray leak of slurry from vent station due to piping system leak.	External event (airplane crash, etc)	F0	E3
RCSTS-09-INTEG13	Release of radioactive aerosols to the atmosphere caused by spray leak of supernate from vent station due to piping system leak.	External event (airplane crash, etc)	F0	E3
RCSTS-09-INTEG14	Release of radioactive aerosols to the atmosphere caused by spray leak of slurry from vent station due to piping system leak.	Flammable gas explosion from release of trapped flammable gas within pipe combined with ignition source	F2	E3
RCSTS-09-INTEG15	Release of radioactive aerosols to the atmosphere caused by spray leak of slurry from vent station due to piping system leak.	Failure of piping due to material defect	F2	E3

Table C-1. Hazardous Conditions With Potential Significant Offsite Consequences (S3). (5 sheets)

ID	Hazardous Conditions	Cause	Freq NC	Env Cons
RCSTS-09-INTEG16	Release of radioactive aerosols to the atmosphere caused by spray leak of slurry from vent station due to piping system leak.	Seismic event	F1	E3
RCSTS-09-INTEG17	Release of radioactive aerosols to the atmosphere caused by spray leak of supernate from vent station due to piping system leak.	Seismic event	F1	E3
RCSTS-09-PRES04	Release of radioactive aerosols to the atmosphere caused by spray leak of slurry from vent station due to piping system leak.	Water hammer	F3	E3
RCSTS-09-PRES05	Release of radioactive aerosols to the atmosphere caused by spray leak of supernate from vent station due to piping system leak.	Water hammer	F3	E3
RCSTS-09-TEMP03	Release of radioactive aerosols to the atmosphere caused by spray leak of slurry from vent station due to piping system leak.	Freezing of piping within the vent station due to cold temperatures caused by running the exhauster	F2	E3
RCSTS-09-TEMP04	Release of radioactive aerosols to the atmosphere caused by spray leak of supernate from vent station due to piping system leak.	Freezing of piping within the vent station due to cold temperatures caused by running the exhauster	F2	E3
RCSTS-22-PRESS01*	Release of radioactive aerosols to the atmosphere caused by spray leak of slurry from 244-A Lift Station due to piping system leak.	Dead heading of flow through the 244-A Lift Station with failure of PRV and development of crack in downstream piping	F3	E3
RCSTS-22-PRESS02*	Release of radioactive aerosols to the atmosphere caused by spray leak of supernate from 244-A Lift Station due to piping system leak.	Dead heading of flow through the 244-A Lift Station with failure of PRV and development of crack in downstream piping	F3	E3
RCSTS-24-FLOW/INTEG07	Release of radioactive aerosols to the atmosphere caused by spray leak of slurry from lift station due to piping system leak.	Failure of jumper due to corrosion	F2	E3
RCSTS-24-FLOW/INTEG08	Release of radioactive aerosols to the atmosphere caused by spray leak of supernate from lift station due to piping system leak.	Failure of jumper due to corrosion	F2	E3
RCSTS-24-FLOW/INTEG09	Release of radioactive aerosols to the atmosphere caused by spray leak of slurry from lift station due to piping system leak.	Failure of jumper due to gasket failure	F3	E3
RCSTS-24-FLOW/INTEG10	Release of radioactive aerosols to the atmosphere caused by spray leak of supernate from lift station due to piping system leak.	Failure of jumper due to gasket failure	F3	E3

Table C-1. Hazardous Conditions With Potential Significant Offsite Consequences (S3). (5 sheets)

ID	Hazardous Conditions	Cause	Freq NC	Env Cons
RCSTS-24-FLOW/INTEG11	Release of radioactive aerosols to the atmosphere caused by spray leak of slurry from lift station due to piping system leak.	Failure of jumper due to misalignment	F3	E3
RCSTS-24-FLOW/INTEG12	Release of radioactive aerosols to the atmosphere caused by spray leak of supernate from lift station due to piping system leak.	Failure of jumper due to misalignment	F3	E3
RCSTS-24-FLOW05	Release of radioactive aerosols to the atmosphere caused by spray leak of slurry from lift station due to piping system leak.	Computer failure or human error causing misrouting of material when flow path is not completely connected	F3	E3
RCSTS-24-FLOW06	Release of radioactive aerosols to the atmosphere caused by spray leak of supernate from lift station due to piping system leak.	Computer failure or human error causing misrouting of material when flow path is not completely connected	F3	E3
RCSTS-24-FLOW07	Release of radioactive aerosols to the atmosphere caused by spray leak of slurry from lift station due to piping system leak.	External leak of valve or valves to the lift station	F3	E3
RCSTS-24-FLOW08	Release of radioactive aerosols to the atmosphere caused by spray leak of supernate from lift station due to piping system leak.	External leak of valve or valves to the lift station	F3	E3
RCSTS-24-INTEG07	Release of radioactive aerosols to the atmosphere caused by spray leak of slurry from lift station due to piping system leak.	External event (airplane crash, etc)	F0	E3
RCSTS-24-INTEG08	Release of radioactive aerosols to the atmosphere caused by spray leak of supernate from lift station due to piping system leak.	External event (airplane crash, etc)	F0	E3
RCSTS-24-INTEG09	Release of radioactive aerosols to the atmosphere caused by spray leak of slurry from lift station due to piping system leak.	Seismic event	F1	E3
RCSTS-24-INTEG10	Release of radioactive aerosols to the atmosphere caused by spray leak of supernate from lift station due to piping system leak.	Seismic event	F1	E3

This page intentionally left blank.

Table C-2. Hazardous Conditions With Potential Significant Onsite Consequences (S2). (11 sheets)

ID	Hazardous Conditions	Cause	Freq NC	Env Cons
RCSTS-01-FLOW02	Release of radioactive aerosols and entrained solids to the atmosphere from Tank 241-SY-102 due to criticality.	Mistransfer of material containing organic extractant from east area via the supernate piping route	F1	E3
RCSTS-01-FLOW03	Release of radioactive supernate to the soil surface from overflow of Tank 241-SY-102 due to mistransfer.	Mistransfer of material from east area via the supernate piping route.	F3	E2
RCSTS-03-FLOW/INTEG01	Release of radioactive slurry to the soil surface from overflow in the SY-A or SY-B valve pit due to piping system leak (pool).	Failure of jumper due to misalignment (human error).	F3	E2
RCSTS-03-FLOW/INTEG02a	Release of radioactive supernate to the soil surface from overflow in the SY-A or SY-B valve pit due to piping system leak (pool).	Failure of jumper due to misalignment (human error)	F3	E2
RCSTS-03-FLOW/INTEG02b	Release of radioactive supernate to the soil surface from overflow in the SY-A or SY-B valve pit due to piping system leak (pool).	Failure of jumper due to gasket failure	F2	E2
RCSTS-03-FLOW/INTEG02c	Release of radioactive supernate to the soil surface from overflow in the SY-A or SY-B valve pit due to piping system leak (pool).	Failure of jumper due to corrosion	F2	E2
RCSTS-03-FLOW02	Release of radioactive slurry to the soil surface from overflow in the SY-A or SY-B valve pit due to piping system leak (pool).	Computer failure or human error causing misrouting of material when flow path is not completely connected	F3	E2
RCSTS-03-FLOW03	Release of radioactive slurry to the soil surface from overflow in the SY-A or SY-B valve pit due to piping system leak (pool).	External leak of valve or valves to the valve pit	F2	E2
RCSTS-03-FLOW04	Release of radioactive supernate to the soil surface from overflow in the SY-A or SY-B valve pit due to piping system leak (pool).	Computer failure or human error causing misrouting of material when flow path is not completely connected	F3	E2
RCSTS-03-FLOW05	Release of radioactive supernate to the soil surface from overflow in the SY-A or SY-B valve pit due to piping system leak (pool).	External leak of valve or valves to the valve pit	F2	E2
RCSTS-03-INTEG01	Release of radioactive aerosols to the atmosphere from the SY valve pit due to fire or explosion of flammable gas.	Fire or explosion in the valve pit caused by buildup of flammable gas because of spill of supernate or slurry	F2	E2
RCSTS-03-INTEG02	Release of radioactive aerosols to the atmosphere from the SY valve pit due to fire or explosion of flammable gas.	Fire or explosion due to leakage of flammable gas due to pipe breach in slurry line caused by gas release from slurry	F2	E2
RCSTS-03-INTEG05	Release of radioactive slurry to the soil surface from overflow in the SY-A or SY-B valve pit due to piping system leak.	External event (airplane crash, etc)	F0	E2
RCSTS-03-INTEG06	Release of radioactive slurry to the soil surface from overflow in the SY-A or SY-B valve pit due to piping system leak.	Seismic event	F1	E2
RCSTS-03-INTEG07	Release of radioactive supernate to the soil surface from overflow in the SY-A or SY-B valve pit due to piping system leak.	External event (airplane crash, etc)	F0	E2
RCSTS-03-INTEG08	Release of radioactive supernate to the soil surface from overflow in the SY-A or SY-B valve pit due to piping system leak (pool).	Seismic event	F1	E2

Table C-2. Hazardous Conditions With Potential Significant Onsite Consequences (S2). (11 sheets)

ID	Hazardous Conditions	Cause	Freq NC	Env Cons
RCSTS-03-PRES02	Release of radioactive slurry to the soil surface from overflow in the SY-A or SY-B valve pit due to piping system leak (pool).	Water hammer	F3	E2
RCSTS-03-PRES03	Release of radioactive supernate to the soil surface from overflow in the SY-A or SY-B valve pit due to piping system leak (pool).	Water hammer	F3	E2
RCSTS-03-TEMP01*	Release of radioactive material to the atmosphere from the SY valve pit due to fire in pit.	Fire in the pit caused by maintenance or electrical problem	F2	E1
RCSTS-04/05-INTEG01a	Release of radioactive supernate to the soil surface from the underground piping between the SY-A or SY-B valve pit and a diversion box due to piping system leak.	Failure of primary and encasement piping due to corrosion	F2	E2
RCSTS-04/05-INTEG01b	Release of radioactive supernate to the soil surface from the underground piping between the SY-A or SY-B valve pit and a diversion box due to piping system leak.	Failure of primary and encasement piping due to unrecognized material flaw	F2	E2
RCSTS-04/05-INTEG02	Release of radioactive supernate to the soil surface from the underground piping between the SY-A or SY-B valve pit and a diversion box due to piping system leak.	Failure of primary and encasement piping due to external event (airplane crash, volcanism, etc)	F0	E2
RCSTS-04/05-INTEG03	Release of radioactive supernate to the soil surface from the underground piping between the SY-A or SY-B valve pit and the diversion box due to piping system leak.	Failure of primary and encasement piping due to external event (excavation accident)	F3	E2
RCSTS-04/05-INTEG04	Release of radioactive supernate to the soil surface from the underground piping between the SY-A or SY-B valve pit and a diversion box due to piping system leak.	Failure of primary and encasement piping due to external event (undermining from broken fluid transfer lines in vicinity)	F2	E2
RCSTS-04/05-INTEG05	Release of radioactive supernate to the soil surface from the underground piping between the SY-A or SY-B valve pit and a diversion box due to piping system leak.	Failure of primary and encasement piping due to seismic event	F1	E2
RCSTS-04/05-TEMP01	Release of radioactive supernate to the soil surface from the underground piping between the SY-A or SY-B valve pit and a diversion box due to piping system leak.	Failure of primary and encasement piping due to freezing	F1	E2
RCSTS-08-FILTER01*	Release of residual contamination from Diversion Box 6241-A due to failure of inlet HEPA filter.	Tornado or high winds across inlet	F1	E1
RCSTS-08-FILTER02*	Release of residual contamination from Diversion Box 6241-A due to failure of inlet HEPA filter.	HEPA filter structural failure or seal failure	F3	E1
RCSTS-08-FLOW03	Release of radioactive supernate to soil surface from overflow of diversion box due to piping system leak.	External leak of valve or valves to the diversion box	F3	E2
RCSTS-08-FLOW04	Release of radioactive slurry to soil surface from overflow of diversion box due to piping system leak.	External leak of valve or valves to the diversion box	F3	E2

Table C-2. Hazardous Conditions With Potential Significant Onsite Consequences (S2). (11 sheets)

ID	Hazardous Conditions	Cause	Freq NC	Env Cons
RCSTS-08-FLOW05	Release of radioactive supernate to soil surface from overflow of diversion box due to piping system leak.	Backflow of supernate to sump pump line, through sump pump and onto diversion box floor	F3	E2
RCSTS-08-INTEG01	Release of radioactive slurry to soil surface from overflow of diversion box due to piping system leak.	Failure of piping due to corrosion	F2	E2
RCSTS-08-INTEG02	Release of radioactive slurry to soil surface from overflow of diversion box due to piping system leak.	External event (airplane crash, etc)	F0	E2
RCSTS-08-INTEG03	Release of radioactive slurry to soil surface from overflow of diversion box due to piping system leak.	Flammable gas explosion from release of trapped flammable gas within pipe combined with ignition source	F2	E2
RCSTS-08-INTEG04	Release of radioactive slurry to soil surface from overflow of diversion box due to piping system leak.	Failure of piping due to material defect	F2	E2
RCSTS-08-INTEG05	Release of radioactive slurry to soil surface from overflow of diversion box due to piping system leak.	Slurry pump overspeed causing catastrophic failure of pump with missiles damaging pipe	F1	E2
RCSTS-08-INTEG06	Release of radioactive slurry to soil surface from overflow of diversion box due to piping system leak.	Seismic event	F1	E2
RCSTS-08-INTEG07	Release of radioactive supernate to soil surface from overflow of diversion box due to piping system leak.	Seismic event	F1	E2
RCSTS-08-INTEG17a	Release of radioactive supernate to the soil surface from overflow of diversion box due to piping system leak.	Failure of piping due to corrosion plus mitigative features failure	F2	E2
RCSTS-08-INTEG17b	Release of radioactive supernate to the soil surface from overflow of diversion box due to piping system leak.	Failure of piping due to unrecognized material flaw	F2	E2
RCSTS-08-INTEG18	Release of radioactive supernate to the soil surface from overflow of diversion box due to piping system leak.	Failure of piping due to external event (airplane crash, volcanism, etc)	F0	E2
RCSTS-08-PRES02	Release of radioactive slurry to soil surface from overflow of diversion box due to piping system leak.	Water hammer	F3	E2
RCSTS-08-PRES03	Release of radioactive supernate to soil surface from overflow of diversion box due to piping system leak.	Water hammer	F3	E2
RCSTS-08-TEMP01	Release of radioactive slurry to soil surface from overflow of diversion box due to piping system leak.	Freezing of piping within the diversion box due to cold temperatures caused by running the exhauster	F2	E2
RCSTS-08-TEMP04	Release of radioactive supernate to the soil surface from overflow of diversion box due to piping system leak.	Failure of piping due to freezing	F1	E2
RCSTS-09-FILTER01*	Release of residual contamination from Vent Station 6241-V due to failure of inlet HEPA filter.	Tornado or high winds across inlet	F1	E1

Table C-2. Hazardous Conditions With Potential Significant Onsite Consequences (S2). (11 sheets)

ID	Hazardous Conditions	Cause	Freq NC	Env Cons
RCSTS-09-FILTER02*	Release of residual contamination from Vent Station 6241-V due to failure of inlet HEPA filter.	HEPA filter structural failure or seal failure	F3	E1
RCSTS-09-FLOW01	Release of radioactive slurry to soil surface from overflow of vent station due to piping system leak.	Flow of slurry to vent station due to incomplete closing of vent valves after venting	F3	E2
RCSTS-09-FLOW04	Release of radioactive slurry to soil surface from overflow of vent station due to piping system leak.	External leak of valve or valves to the vent station	F3	E2
RCSTS-09-FLOW05	Release of radioactive supernate to soil surface from overflow of vent station due to piping system leak.	External leak of valve or valves to the vent station	F3	E2
RCSTS-09-FLOW06	Release of radioactive supernate to soil surface from overflow of vent station due to piping system leak.	Flow of supernate to vent station due to incomplete closing of vent valves after venting	F3	E2
RCSTS-09-FLOW07	Release of radioactive supernate to soil surface from overflow of vent station due to piping system leak.	Backflow of supernate to sump pump line, through sump pump and onto vent station floor	F3	E2
RCSTS-09-INTEG01	Release of radioactive slurry to soil surface from overflow of vent station due to piping system leak.	Failure of piping due to corrosion	F2	E2
RCSTS-09-INTEG02	Release of radioactive supernate to soil surface from overflow of vent station due to piping system leak.	Failure of piping due to corrosion	F2	E2
RCSTS-09-INTEG03	Release of radioactive slurry to soil surface from overflow of vent station due to piping system leak.	External event (airplane crash, etc)	F0	E2
RCSTS-09-INTEG04	Release of radioactive supernate to soil surface from overflow of vent station due to piping system leak.	External event (airplane crash, etc)	F0	E2
RCSTS-09-INTEG05	Release of radioactive slurry to soil surface from overflow of vent station due to piping system leak.	Flammable gas explosion from release of trapped flammable gas within pipe combined with ignition source	F2	E2
RCSTS-09-INTEG06	Release of radioactive aerosols to the atmosphere from the vent station due to fire or explosion of flammable gas.	Fire or explosion in the vent station caused by buildup of flammable gas because of spill of supernate or slurry to vent station	F2	E2
RCSTS-09-INTEG07	Release of radioactive slurry to soil surface from overflow of vent station due to piping system leak.	Failure of piping due to material defect	F2	E2
RCSTS-09-INTEG08	Release of radioactive supernate to soil surface from overflow of vent station due to piping system leak.	Failure of piping due to material defect	F2	E2
RCSTS-09-INTEG09	Release of radioactive slurry to soil surface from overflow of vent station due to piping system leak.	Seismic event	F1	E2
RCSTS-09-INTEG10	Release of radioactive supernate to soil surface from overflow of vent station due to piping system leak.	Seismic event	F1	E2

Table C-2. Hazardous Conditions With Potential Significant Onsite Consequences (S2). (11 sheets)

ID	Hazardous Conditions	Cause	Freq NC	Env Cons
RCSTS-09-PRES01	Release of radioactive slurry to soil surface from overflow of vent station due to piping system leak.	Water hammer	F3	E2
RCSTS-09-PRES02	Release of radioactive supernate to soil surface from overflow of vent station due to piping system leak.	Water hammer	F3	E2
RCSTS-09-TEMP01	Release of radioactive slurry to soil surface from overflow of vent station due to piping system leak.	Freezing of piping within the vent station due to cold temperatures caused by running the exhauster	F2	E2
RCSTS-09-TEMP02	Release of radioactive supernate to soil surface from overflow of vent station due to piping system leak.	Freezing of piping within the vent station due to cold temperatures caused by running the exhauster	F2	E2
RCSTS-10/11-INTEG01	Release of radioactive supernate to the soil from the underground piping between the diversion box and the vent station due to piping system leak.	Failure of primary and encasement piping due to external event (undermining from broken fluid transfer lines in vicinity)	F3	E2
RCSTS-10/11-INTEG02a	Release of radioactive supernate to the soil from the underground piping between the diversion box and the vent station due to piping system leak.	Failure of primary and encasement piping due to corrosion	F2	E2
RCSTS-10/11-INTEG02b*	Release of radioactive supernate to the soil subsurface from the underground piping between the diversion box and the vent station due to piping system leak.	Failure of primary and encasement piping due to corrosion	F2	E2
RCSTS-10/11-INTEG03a	Release of radioactive supernate to the soil from the underground piping between the diversion box and the vent station due to piping system leak.	Failure of primary and encasement piping due to external event (excavation accident)	F3	E2
RCSTS-10/11-INTEG03b*	Release of radioactive supernate to the atmosphere from the underground piping between the diversion box and the vent station due to excavation of piping system and subsequent leak.	Failure of primary and encasement piping due to external event (excavation accident)	F3	E2
RCSTS-10/11-INTEG04	Release of radioactive supernate to the soil from the underground piping between the diversion box and the vent station due to piping system leak.	Failure of primary and encasement piping due to external event (airplane crash, volcanism etc)	F0	E2
RCSTS-10/11-INTEG05a	Release of radioactive supernate to the soil from the underground piping between the diversion box and the vent station due to piping system leak.	Failure of primary and encasement piping due to unrecognized material flaw	F2	E2
RCSTS-10/11-INTEG05b*	Release of radioactive supernate to the soil subsurface from the underground piping between the diversion box and the vent station due to piping system leak.	Failure of primary and encasement piping due to unrecognized material flaw	F2	E2
RCSTS-10/11-INTEG06	Release of radioactive supernate to the soil from the underground piping between the diversion box and the vent station due to piping system leak.	Failure of primary and encasement piping due to seismic event	F1	E2

Table C-2. Hazardous Conditions With Potential Significant Onsite Consequences (S2). (11 sheets)

ID	Hazardous Conditions	Cause	Freq NC	Env Cons
RCSTS-10/11-PRES01a	Release of radioactive supernate to the soil from the underground piping between the diversion box and the vent station due to piping system leak.	Failure of primary and encasement piping due to water hammer	F3	E2
RCSTS-10/11-PRES01b*	Release of radioactive supernate to the soil subsurface from the underground piping between the diversion box and the vent station due to piping system leak.	Failure of primary and encasement piping due to water hammer	F3	E2
RCSTS-10/11-TEMP01	Release of radioactive supernate to the soil from the underground piping between the diversion box and the vent station due to piping system leak.	Failure of primary piping and encasement due to freezing	F1	E2
RCSTS-10/11-TEMP02	Release of radioactive supernate to the soil from the underground piping between the diversion box and the vent station due to piping system leak.	Failure of primary and encasement piping due to thermal stress	F3	E2
RCSTS-12/13-INTEG01	Release of radioactive supernate to the soil from the underground piping between the vent station and the 244-A Lift Station due to piping system leak.	Failure of primary and encasement piping due to external event (undermining from broken fluid transfer lines in vicinity)	F3	E2
RCSTS-12/13-INTEG02a	Release of radioactive supernate to the soil from the underground piping between the vent station and the 244-A Lift Station due to piping system leak.	Failure of primary and encasement piping due to corrosion	F2	E2
RCSTS-12/13-INTEG02b*	Release of radioactive supernate to the soil subsurface from the underground piping between the vent station and the 244-A Lift Station due to piping system leak.	Failure of primary and encasement piping due to corrosion	F2	E2
RCSTS-12/13-INTEG03a	Release of radioactive supernate to the soil from the underground piping between the vent station and the 244-A Lift Station due to piping system leak.	Failure of primary and encasement piping due to external event (excavation accident)	F3	E2
RCSTS-12/13-INTEG03b*	Release of radioactive supernate to the atmosphere from the underground piping between the vent station and the 244-A Lift Station due to excavation of piping system and subsequent leak.	Failure of primary and encasement piping due to external event (excavation accident)	F3	E2
RCSTS-12/13-INTEG04	Release of radioactive supernate to the soil from the underground piping between the vent station and the 244-A Lift Station due to piping system leak.	Failure of primary and encasement piping due to external event (airplane crash, volcanism etc)	F0	E2
RCSTS-12/13-INTEG05a	Release of radioactive supernate to the soil from the underground piping between the vent station and the 244-A Lift Station due to piping system leak.	Failure of primary and encasement piping due to unrecognized material flaw	F2	E2
RCSTS-12/13-INTEG05b*	Release of radioactive supernate to the soil subsurface from the underground piping between the vent station and the 244-A Lift Station due to piping system leak.	Failure of primary and encasement piping due to unrecognized material flaw	F2	E2

Table C-2. Hazardous Conditions With Potential Significant Onsite Consequences (S2). (11 sheets)

ID	Hazardous Conditions	Cause	Freq NC	Env Cons
RCSTS-12/13-INTEG06	Release of radioactive supernate to the soil from the underground piping between the vent station and the 244-A Lift Station due to piping system leak.	Failure of primary and encasement piping due to seismic event	F1	E2
RCSTS-12/13-PRES01a	Release of radioactive supernate to the soil from the underground piping between the vent station and the 244-A Lift Station due to piping system leak.	Failure of primary and encasement piping due to steam hammer caused by loss of flushwater flow to steam mixing chamber in east	F3	E2
RCSTS-12/13-PRES01b*	Release of radioactive supernate to the soil from the underground piping between the vent station and the 244-A Lift Station due to piping system leak.	Failure of primary and encasement piping due to steam hammer caused by loss of flushwater flow to steam mixing chamber in east area	F3	E2
RCSTS-12/13-PRES02	Release of radioactive supernate to the soil from the underground piping between the vent station and the 244-A Lift Station due to piping system leak.	Failure of primary and encasement piping due to water hammer	F3	E2
RCSTS-12/13-TEMP01	Release of radioactive supernate to the soil from the underground piping between the vent station and the 244-A Lift Station due to piping system leak.	Failure of primary piping and encasement due to freezing	F1	E2
RCSTS-12/13-TEMP02	Release of radioactive supernate to the soil from the underground piping between the vent station and the 244-A Lift Station due to piping system leak.	Failure of primary and encasement piping due to thermal stress	F3	E2
RCSTS-15/16-INTEG01a	Release of radioactive slurry to the soil surface from the underground piping between the SY-A or SY-B valve pit and a diversion box due to piping system leak.	Failure of primary and encasement piping due to corrosion	F2	E2
RCSTS-15/16-INTEG01b	Release of radioactive slurry to the soil surface from the underground piping between the SY-A or SY-B valve pit and a diversion box due to piping system leak.	Failure of primary and encasement piping due to unrecognized material flaw	F2	E2
RCSTS-15/16-INTEG02	Release of radioactive slurry to the soil surface from the underground piping between the SY-A or SY-B valve pit and the diversion box due to piping system leak.	Failure of primary and encasement piping due to external event (excavation accident)	F2	E2
RCSTS-15/16-INTEG03a	Release of radioactive slurry to the soil surface from the underground piping between the SY-A or SY-B valve pit and a diversion box due to piping system leak.	Failure of primary and encasement piping due to external event (undermining from broken fluid transfer lines in vicinity)	F3	E2
RCSTS-15/16-INTEG03b	Release of radioactive slurry to the soil surface from overflow of diversion box due to piping system leak.	Failure of piping due to external event (undermining from broken fluid transfer lines in vicinity)	F2	E2
RCSTS-15/16-INTEG04	Release of radioactive slurry to the soil surface from the underground piping between the SY-A or SY-B valve pit and the diversion box due to piping system leak.	Failure of primary and encasement piping due to seismic event	F1	E2

Table C-2. Hazardous Conditions With Potential Significant Onsite Consequences (S2). (11 sheets)

ID	Hazardous Conditions	Cause	Freq NC	Env Cons
RCSTS-15/16-INTEG05	Release of radioactive slurry to the soil surface from the underground piping between the SY-A or SY-B valve pit and a diversion box due to piping system leak.	Failure of primary and encasement piping due to external event (airplane crash, volcanism, etc)	FO	E2
RCSTS-15/16-TEMP01	Release of radioactive slurry to the soil surface from the underground piping between the SY-A or SY-B valve pit and a diversion box due to piping system leak.	Failure of primary and encasement piping due to freezing	F1	E2
RCSTS-18/19-INTEG01	Release of radioactive slurry to the soil from the underground piping between the diversion box and the vent station due to piping system leak.	Failure of primary and encasement piping due to external event (undermining from broken fluid transfer lines in vicinity)	F3	E2
RCSTS-18/19-INTEG02	Release of radioactive slurry to the soil from the underground piping between the diversion box and the vent station due to piping system leak.	Failure of primary and encasement piping due to corrosion	F2	E2
RCSTS-18/19-INTEG03a	Release of radioactive slurry to the soil from the underground piping between the diversion box and the vent station due to piping system leak.	Failure of primary and encasement piping due to external event (excavation accident)	F3	E2
RCSTS-18/19-INTEG03b*	Release of radioactive slurry to the atmosphere from the underground piping between the diversion box and the vent station due to excavation of piping system and subsequent leak.	Failure of primary and encasement piping due to external event (excavation accident)	F3	E2
RCSTS-18/19-INTEG04	Release of radioactive slurry to the soil from the underground piping between the diversion box and the vent station due to piping system leak.	Failure of primary and encasement piping due to external event (airplane crash, volcanism etc)	FO	E2
RCSTS-18/19-INTEG05	Release of radioactive slurry to the soil from the underground piping between the diversion box and the vent station due to piping system leak.	Failure of primary and encasement piping due to flammable gas explosion in primary piping	F2	E2
RCSTS-18/19-INTEG06	Release of radioactive slurry to the soil from the underground piping between the diversion box and the vent station due to piping system leak.	Failure of primary and encasement piping due to unrecognized material flaw	F2	E2
RCSTS-18/19-INTEG07	Release of radioactive slurry to the soil from the underground piping between the diversion box and the vent station due to piping system leak.	Failure of primary and encasement piping due to seismic event	F1	E2
RCSTS-18/19-PRES01	Release of radioactive slurry to the soil from the underground piping between the diversion box and the vent station due to piping system leak.	Failure of primary and encasement piping due to water hammer	F3	E2
RCSTS-18/19-TEMP01	Release of radioactive slurry to the soil from the underground piping between the diversion box and the vent station due to piping system leak.	Failure of primary piping and encasement due to freezing	F1	E2

Table C-2. Hazardous Conditions With Potential Significant Onsite Consequences (S2). (11 sheets)

ID	Hazardous Conditions	Cause	Freq NC	Env Cons
RCSTS-18/19-TEMP02	Release of radioactive slurry to the soil from the underground piping between the diversion box and the vent station due to piping system leak.	Failure of primary and encasement piping due to thermal stress	F3	E2
RCSTS-1FS-LEVEL03	Release of caustic solution and radionuclides to the sump pit from the water flush tank due to over filling of tank.	Overfilling of flush tank from flow of radioactive waste from transfer line. Block valves open, valve limit switch and pressure switch fail and administrative control of raw water block valves fail	F2	E2
RCSTS-22-PRESS03*	Release of radioactive supernate to soil surface from overflow of 244-A Lift Station due to piping break.	Dead heading of flow through the 244-A Lift Station with failure of PRV and subsequent downstream pipe failure	F3	E3
RCSTS-22-PRESS04*	Release of radioactive slurry to soil surface from overflow of 244-A Lift Station due to piping break.	Dead heading of flow through the 244-A Lift Station with failure of PRV and subsequent downstream pipe failure	F3	E3
RCSTS-24-FLOW/INTEG01	Release of radioactive slurry to soil surface from overflow of lift station due to piping system leak.	Failure of jumper due to corrosion	F2	E2
RCSTS-24-FLOW/INTEG02	Release of radioactive supernate to soil surface from overflow of 244-A Lift Station due to piping system leak.	Failure of jumper due to corrosion	F2	E2
RCSTS-24-FLOW/INTEG03	Release of radioactive slurry to soil surface from overflow of lift station due to piping system leak.	Failure of jumper due to gasket failure	F3	E2
RCSTS-24-FLOW/INTEG04	Release of radioactive supernate to soil surface from overflow of 244-A Lift Station due to piping system leak.	Failure of jumper due to gasket failure	F3	E2
RCSTS-24-FLOW/INTEG05	Release of radioactive slurry to soil surface from overflow of lift station due to piping system leak.	Failure of jumper due to misalignment	F3	E2
RCSTS-24-FLOW/INTEG06	Release of radioactive supernate to soil surface from overflow of 244-A Lift Station due to piping system leak.	Failure of jumper due to misalignment	F3	E2
RCSTS-24-FLOW01	Release of radioactive slurry to soil surface from overflow of lift station due to piping system leak.	Computer failure or human error causing misrouting of material when flow path is not completely connected	F3	E2
RCSTS-24-FLOW02	Release of radioactive supernate to soil surface from overflow of 244-A Lift Station due to piping system leak.	Computer failure or human error causing misrouting of material when flow path is not completely connected	F3	E2
RCSTS-24-FLOW03	Release of radioactive slurry to soil surface from overflow of lift station due to piping system leak.	External leak of valve or valves to the lift station	F3	E2
RCSTS-24-FLOW04	Release of radioactive supernate to soil surface from overflow of 244-A Lift Station due to piping system leak.	External leak of valve or valves to the lift station	F3	E2
RCSTS-24-INTEG01	Release of radioactive slurry to soil surface from overflow of lift station due to piping system leak.	External event (airplane crash, etc)	F0	E2

Table C-2. Hazardous Conditions With Potential Significant Onsite Consequences (S2). (11 sheets)

ID	Hazardous Conditions	Cause	Freq NC	Env Cons
RCSTS-24-INTEG02	Release of radioactive supernate to soil surface from overflow of 244-A Lift Station due to piping system leak.	External event (airplane crash, etc)	FO	E2
RCSTS-24-INTEG03	Release of radioactive aerosols to the atmosphere from the lift station due to fire or explosion of flammable gas.	Fire or explosion in the lift station caused by buildup of flammable gas because of spill of supernate or slurry	F2	E2
RCSTS-24-INTEG04	Release of radioactive slurry to soil surface from overflow of lift station due to piping system leak.	Seismic event	F1	E2
RCSTS-24-INTEG05	Release of radioactive supernate to soil surface from overflow of 244-A Lift Station due to piping system leak.	Seismic event	F1	E2
RCSTS-24-INTEG06	Release of radioactive aerosols to the atmosphere from the lift station due to fire or explosion of flammable gas.	Fire or explosion due to leakage of flammable gas due to pipe breach in slurry line caused by gas release from slurry	F2	E2
RCSTS-24-PRES01	Release of radioactive supernate to soil surface from overflow of 244-A Lift Station due to piping system leak.	Steam hammer or thermal stress caused by loss of flushwater flow to steam mixing chamber in east area	F3	E2
RCSTS-24-PRES02	Release of radioactive slurry to soil surface from overflow of lift station due to piping system leak.	Water hammer	F3	E2
RCSTS-24-PRES03	Release of radioactive supernate to soil surface from overflow of 244-A Lift Station due to piping system leak.	Water hammer	F3	E2
RCSTS-2FS-FLOW01	Release of caustic solution spray to the atmosphere from the water flush system due to a transfer line break.	Line break (upstream of flush pump) due to structural failure	F2	E2
RCSTS-2FS-FLOW02	Release of caustic solution spray to the atmosphere from the water flush system due to a transfer line break.	Line break (downstream of flush pump) due to structural failure	F2	E2
RCSTS-2FS-FLOW03	Release of caustic solution spray to the atmosphere from the water flush system due to a transfer line break.	Line plug - before heaters due to debris buildup causing a pressure buildup and failure of line	F2	E2
RCSTS-2FS-FLOW04	Release of caustic solution spray to the atmosphere from the water flush system due to a transfer line break.	Line plug - after heaters due to debris buildup causing pressure buildup at the heater and resulting in heater pipe failure	F2	E2
RCSTS-2FS-FLOW05	Release of caustic solution spray to the atmosphere from the water flush system due to a relief valve failure.	Caustic injection pressure relief valve failure	F3	E2
RCSTS-2FS-FLOW07	Release of caustic solution spray to the atmosphere from the water flush system due to a transfer line break.	Flush line break due to structural failure	F2	E2
RCSTS-2FS-PRES01	Release of caustic solution spray to the atmosphere from the water flush system due line plug.	Flush line plug - before heaters due to debris buildup causing a pressure buildup and failure of line	F2	E2
RCSTS-2FS-PRES02	Release of caustic solution spray to the atmosphere from the water flush system due to a line plug.	Flush line plug - after heaters due to debris buildup causing pressure buildup at the heater and resulting in heater pipe failure	F2	E2

Table C-2. Hazardous Conditions With Potential Significant Onsite Consequences (S2). (11 sheets)

ID	Hazardous Conditions	Cause	Freq NC	Env Cons
RCSTS-2FS-PRES03	Release of caustic solution spray to the atmosphere from the water flush system due to a line break.	Flush line break due to structural failure	F2	E2
RCSTS-2FS-TEMP01	Release of caustic solution spray to the atmosphere from the water flush system due to a line plug.	Flush line plug - before heaters due to debris buildup causing a pressure buildup and failure of line	F2	E2
RCSTS-2FS-TEMP02	Release of caustic solution spray to the atmosphere from the water flush system due to freezing conditions.	Freezing weather with loss of heat trace function	F2	E2
RCSTS-4FS-FLOW03	Release of caustic to the atmosphere from the caustic system due to pressure relief valve failing open.	Pressure relief valve fails open	F2	E2
RCSTS-4FS-FLOW04	Release of caustic to the atmosphere from the caustic system due to over pressurization of line and failure of pressure relief valve to open.	Back pressure valve fails in closed position	F2	E2
RCSTS-4FS-FLOW05	Release of caustic to the atmosphere from the caustic system due to line failure in chemical injection package.	Line failure/leak due to structural failure	F2	E2
RCSTS-4FS-FLOW06	Release of caustic to the atmosphere from the caustic system due to a caustic system drain valve leak.	Caustic drain valve leak	F2	E2
RCSTS-4FS-PRES/TEMP01	Release of caustic to the atmosphere from the caustic system due to pressure relief valve failing open.	Pressure relief valve fails open on caustic injection system.	F2	E2
RCSTS-4FS-PRES/TEMP02	Release of caustic to the atmosphere from the caustic system due to pressure relief valve failing in closed position and rupture of line.	Back pressure relief valve fails in closed position.	F3	E2
RCSTS-5FS-FLOW01	Release of caustic to the atmosphere from caustic line due to a line break.	Line break due to structural failure.	F2	E2
RCSTS-5FS-FLOW02	Release of caustic to the atmosphere from caustic line due to a line break.	Line plug due to debris buildup causing pressure buildup resulting in pipe failure.	F2	E2

This page intentionally left blank.

Table C-3. Hazardous Conditions With Potential Significant Worker Consequences (S1). (3 sheets)

ID	Hazardous Conditions	Cause	Freq NC	Env Cons
RCSTS-01-FLOW01	Release of radioactive slurry or supernate to the soil surface from overflow of the 244-S catch station due to reverse flow.	Reverse flow to 244-S catch station caused by improper valve lineup.	F3	E1
RCSTS-03-FLOW01	Release of radioactive slurry or supernate to the SY flush pit from transfer line due to backflow.	Reverse flow to flush pit caused by improper valving sequence	F3	E1
RCSTS-03-PRES01	Release of radioactive material to atmosphere from SY valve pit due to over-pressurization event in Tank 241-SY-102.	Pressure event in Tank 241-SY-102 with loss of valve pit seal loop water	F3	E1
RCSTS-08-AIR01	Release of radioactive vapors to the diversion box atmosphere from accumulated waste in diversion box due to pipe encasement draining.	Draining of the encasement	F3	E0
RCSTS-08-AIR02	Exposure to chemical vapors and liquids in diversion box due to the spill or leak of chemicals in confined space.	Chemicals brought in for decontamination and maintenance	F3	E0
RCSTS-08-AIR03	Release of radioactive vapors to the diversion box atmosphere due to waste being present in box.	Leak of waste solution	F3	E0
RCSTS-08-AIR04	Release of chemical waste into diversion box from leak of waste solution resulting in worker exposure.	Leak of waste solution	F3	E0
RCSTS-08-OCC01	Worker injury due to welding gas bottle becoming a missile in diversion box.	Damage from welding gas bottle during maintenance activity in diversion box	F3	E0
RCSTS-08-OCC02	Worker discomfort from cold temperatures in diversion box.	Running an exhauster during cold weather	F3	E0
RCSTS-08-RAD01	Release of radioactive material to the diversion box from transfer piping due to encasement draining.	Draining of the encasement	F3	E0
RCSTS-08-RAD02	Release of radioactive material to the diversion box from transfer line due to pipe leak.	Leak of waste solution	F2	E0
RCSTS-08-RAD03	High radiation dose to worker from the diversion box due to the presence of residual radioactive contamination.	Holdup of radionuclides due to trapped radioactive material in pumps or pipes	F3	E0
RCSTS-09-AIR02	Release of radioactive vapors to the vent station atmosphere due to waste being present in station.	Leak of waste solution	F3	E0
RCSTS-09-AIR03	Exposure to chemical vapors and liquids in vent station due to the spill or leak of chemicals.	Chemicals brought in for decontamination and maintenance	F3	E0
RCSTS-09-AIR04	Release of chemical waste into diversion box from leak of waste solution resulting in worker exposure.	Leak of waste solution	F3	E0

Table C-3. Hazardous Conditions With Potential Significant Worker Consequences (S1). (3 sheets)

RCSTS-09-OCC01	Worker injury due to welding gas bottle becoming a missile in vent station.	Damage from welding gas bottle during maintenance activity in vent station	F3	E0
RCSTS-09-OCC02	Worker discomfort from cold temperatures in vent station.	Running an exhauster during cold weather	F3	E0
RCSTS-09-RAD02	Release of radioactive material to the vent station from transfer line due to pipe leak.	Leak of waste solution	F2	E0
RCSTS-09-RAD03	High radiation dose to worker from the vent station due to the presence of residual radioactive contamination.	Holdup of radionuclides due to trapped radioactive material in pipes	F3	E0
RCSTS-1FS-LEVEL01	Release of caustic solution to the sump pit from the water flush tank due to over filling of tank.	Operator error - overfill of caustic material	F3	E0
RCSTS-1FS-LEVEL02	Release of caustic solution and radionuclides to the sump pit from the water flush tank due to over filling of tank.	Flush tank receives radioactive waste from transfer line during drainback process. Jumper block valves and raw water block valves opened during the drainback of waste from vent station of the cross site transfer line.	F3	E0
RCSTS-1FS-LEVEL04	Release of caustic solution to the sump pit from the water flush tank due to human error.	Human error - drain valve left open	F3	E0
RCSTS-1FS-LEVEL05	Release of caustic solution to the sump pit from the water flush tank due to drain valve failure.	Drain valve fails open	F1	E0
RCSTS-1FS-LEVEL06	Release of caustic solution to the sump pit from the water flush tank due to tank connection failure.	Structural failure of flush tank connections	F2	E0
RCSTS-1FS-LEVEL07	Release of caustic solution to the sump pit from the water flush tank due to tank structural failure.	Structural failure of flush tank	F1	E0
RCSTS-1FS-PRES01	Release of caustic solution to the sump pit from the water flush tank due to tank failure.	Tank vent and overflow line blockage with flush pump running in flush cycle	F2	E0
RCSTS-1FS-STRUCT01	Release of caustic solution to the sump pit from the water flush tank due to tank connection failure.	Structural failure of pipe connections/expansion joint	F2	E0
RCSTS-1FS-STRUCT02	Release of caustic solution to the sump pit from the water flush tank due to structural failure of tank.	Structural failure of water flush tank	F1	E0
RCSTS-1FS-STRUCT03	Release of caustic solution to the sump pit from the water flush tank due to tank corrosion failure.	External water flush tank corrosion	F1	E0
RCSTS-1FS-STRUCT04	Release of caustic solution to the sump pit from the water flush tank due to tank failure.	Natural phenomena - high winds, seismic event, ash fall	F1	E0
RCSTS-2FS-FLOW06	Release of caustic solution to the atmosphere from the water flush system due to a mistransfer.	Flush line block valve failure, or valve left open due to operator error	F2	E0
RCSTS-3FS-FLOW01	Release of caustic solution to the sump from the water flush system due to rupture of tank fittings.	Raw water line break/rupture, floats flush water tank, damages tank/equipment	F2	E1

Table C-3. Hazardous Conditions With Potential Significant Worker Consequences (S1). (3 sheets)

RCSTS-3FS-FLOW02	Release of caustic to the sump from the caustic system due to rupture of caustic drum.	Raw water line break/rupture, overfilling of chemical addition equipment sump breaching drum containment	F2	E1
RCSTS-4FS-FLOW01	Release of caustic to the sump from the caustic system due to rupture of drum.	Caustic drum failure due to corrosion	F2	E1
RCSTS-4FS-FLOW02	Release of caustic material to caustic storage area from caustic drum due to handling error.	Materials handling accident	F3	E0
RCSTS-4FS-FLOW07	Release of caustic to the sump from the caustic system due to failure of check valve and overfilling of caustic drum with raw water.	Check valve fails open and bypass valve left open, backflow of raw water into caustic addition line of flush system.	F2	E1
RCSTS-5FS-FLOW03	Release of radioactive material into water flush tank due to loss of flush system pump operation.	Loss of pump pressure during flush operation causing back flow of waste	F3	E0
RCSTS-GENERAL-PRES	Release of radioactive material to the soil surface from supernate or slurry piping due to encasement breach (pipe is considered empty except for residual contamination).	Pneumatic leak testing	F3	E1

This page intentionally left blank.

Table C-4. Hazardous Conditions with Potential Severe Environmental Consequences (E2 and E3). (14 sheets)

ID	Hazardous Conditions	Cause	Freq NC	Env Cons
RCSTS-01-FLOW02	Release of radioactive aerosols and entrained solids to the atmosphere from Tank 241-SY-102 due to criticality.	Mistransfer of material containing organic extractant from east area via the supernate piping route	F1	E3
RCSTS-01-FLOW04	Release of radioactive aerosols/entrained solids and/or toxic gases to the atmosphere from Tank 241-SY-102 due to chemical reaction.	Mistransfer of incompatible material from east area via the supernate piping route.	F2	E3
RCSTS-01-FLOW05	Release of ammonia to atmosphere from a fire or a gas release resulting in an explosion due to addition of inadequately diluted caustic.	Human error	F2	E3
RCSTS-03-FLOW/INTEG03a	Release of radioactive slurry aerosols to the atmosphere caused by spray leak of slurry from the SY-A or SY-B valve pit due to piping system leak.	Failure of jumper due to misalignment (human error)	F2	E3
RCSTS-03-FLOW/INTEG03b	Release of radioactive slurry aerosols to the atmosphere caused by spray leak of slurry from the SY-A or SY-B valve pit due to piping system leak.	Failure of jumper due to gasket failure	F2	E3
RCSTS-03-FLOW/INTEG03c	Release of radioactive slurry aerosols to the atmosphere caused by spray leak of slurry from the SY-A or SY-B valve pit due to piping system leak.	Failure of jumper due to corrosion	F2	E3
RCSTS-03-FLOW/INTEG04a	Release of radioactive supernate aerosols to the atmosphere caused by spray leak of supernate from the SY-A or SY-B valve pit due to piping system leak.	Failure of jumper due to misalignment (human error)	F2	E3
RCSTS-03-FLOW/INTEG04b	Release of radioactive supernate aerosols to the atmosphere caused by spray leak of supernate from the SY-A or SY-B valve pit due to piping system leak.	Failure of jumper due to gasket failure	F2	E3
RCSTS-03-FLOW/INTEG04c	Release of radioactive supernate aerosols to the atmosphere caused by spray leak of supernate from the SY-A or SY-B valve pit due to piping system leak.	Failure of jumper due to corrosion	F2	E3
RCSTS-03-FLOW06	Release of radioactive slurry aerosols to the atmosphere caused by spray leak of slurry from the SY-A or SY-B valve pit due to piping system leak.	Computer failure or human error causing misrouting of material when flow path is not completely connected	F2	E3
RCSTS-03-FLOW07	Release of radioactive slurry aerosols to the atmosphere caused by spray leak of slurry from the SY-A or SY-B valve pit due to piping system leak.	External leak of valve or valves to the valve pit	F2	E3
RCSTS-03-FLOW08	Release of radioactive supernate aerosols to the atmosphere caused by spray leak of supernate from the SY-A or SY-B valve pit due to piping system leak.	Computer failure or human error causing misrouting of material when flow path is not completely connected	F2	E3
RCSTS-03-INTEG03	Release of radioactive supernate aerosols to the atmosphere caused by spray leak of supernate from the SY-A or SY-B valve pit due to piping system leak.	External leak of valve or valves to the valve pit	F2	E3
RCSTS-03-INTEG04	Release of radioactive supernate aerosols to the atmosphere caused by spray leak of supernate from the SY-A or SY-B valve pit due to piping system leak.	Seismic event	F1	E3
RCSTS-03-INTEG09	Release of radioactive slurry aerosols to the atmosphere caused by spray leak of slurry from the SY-A or SY-B valve pit due to piping system leak.	External event (airplane crash, etc)	F0	E3
RCSTS-03-INTEG10	Release of radioactive slurry aerosols to the atmosphere caused by spray leak of slurry from the SY-A or SY-B valve pit due to piping system leak.	Seismic event	F1	E3

Table C-4. Hazardous Conditions with Potential Severe Environmental Consequences (E2 and E3). (14 sheets)

ID	Hazardous Conditions	Cause	Freq NC	Env Cons
RCSTS-03-INTEG11	Release of radioactive supernate aerosols to the atmosphere caused by spray leak of supernate from the SY-A or SY-B valve pit due to piping system leak.	External event (airplane crash, etc)	F0	E3
RCSTS-08-FLOW08	Release of radioactive aerosols to the atmosphere caused by spray leak of slurry from diversion box due to piping system leak.	External leak of valve or valves to the diversion box	F3	E3
RCSTS-08-INTEG08	Release of radioactive aerosols to the atmosphere caused by spray leak of slurry from diversion box due to piping system leak.	Failure of piping due to corrosion	F2	E3
RCSTS-08-INTEG09	Release of radioactive aerosols to the atmosphere caused by spray leak of slurry from diversion box due to piping system leak.	External event (airplane crash, etc)	F0	E3
RCSTS-08-INTEG10	Release of radioactive aerosols to the atmosphere caused by spray leak of supernate from diversion box due to piping system leak.	External event (airplane crash, etc)	F0	E3
RCSTS-08-INTEG11	Release of radioactive aerosols to the atmosphere caused by spray leak of slurry from diversion box due to piping system leak.	Flammable gas explosion from release of trapped flammable gas within pipe combined with ignition source	F2	E3
RCSTS-08-INTEG12	Release of radioactive aerosols to the atmosphere from the 6241-A diversion box due to fire or explosion of flammable gas.	Fire or explosion in the diversion box caused by buildup of flammable gas because of spill of supernate to diversion box sump	F2	E3
RCSTS-08-INTEG13	Release of radioactive aerosols to the atmosphere caused by spray leak of slurry from diversion box due to piping system leak.	Failure of piping due to material defect	F2	E3
RCSTS-08-INTEG14	Release of radioactive aerosols to the atmosphere caused by spray leak of slurry from diversion box due to piping system leak.	Slurry pump overspeed causing catastrophic failure of pump with missiles damaging pipe and challenging diversion box confinement	F1	E3
RCSTS-08-INTEG15	Release of radioactive aerosols to the atmosphere caused by spray leak of slurry from diversion box due to piping system leak.	Seismic event	F1	E3
RCSTS-08-INTEG16	Release of radioactive aerosols to the atmosphere caused by spray leak of supernate from diversion box due to piping system leak.	Seismic event	F1	E3
RCSTS-08-PRES04	Release of radioactive aerosols to the atmosphere caused by spray leak of slurry from diversion box due to piping system leak.	Water hammer	F3	E3
RCSTS-08-PRES05	Release of radioactive aerosols to the atmosphere caused by spray leak of supernate from diversion box due to piping system leak.	Water hammer	F3	E3
RCSTS-08-TEMP02	Release of radioactive aerosols to the atmosphere caused by spray leak of slurry from diversion box due to piping system leak.	Freezing of piping within the diversion box due to cold temperatures caused by running the exhauster	F2	E3
RCSTS-08-TEMP03	Release of radioactive aerosols to the atmosphere caused by spray leak of supernate from diversion box due to piping system leak.	Freezing of piping within the diversion box due to cold temperatures caused by running the exhauster	F2	E3

Table C-4. Hazardous Conditions with Potential Severe Environmental Consequences (E2 and E3). (14 sheets)

ID	Hazardous Conditions	Cause	Freq NC	Env Cons
RCSTS-09-FLOW10	Release of radioactive aerosols to the atmosphere caused by spray leak of slurry from vent station due to piping system leak.	External leak of valve or valves to the vent station	F3	E3
RCSTS-09-FLOW11	Release of radioactive supernate to soil surface from overflow of vent station due to piping system leak.	Backflow of supernate to sump pump line, through sump pump and onto vent station floor	F3	E3
RCSTS-09-INTEG11	Release of radioactive aerosols to the atmosphere caused by spray leak of slurry from vent station due to piping system leak.	Failure of piping due to corrosion	F2	E3
RCSTS-09-INTEG12	Release of radioactive aerosols to the atmosphere caused by spray leak of slurry from vent station due to piping system leak.	External event (airplane crash, etc)	F0	E3
RCSTS-09-INTEG13	Release of radioactive aerosols to the atmosphere caused by spray leak of supernate from vent station due to piping system leak.	External event (airplane crash, etc)	F0	E3
RCSTS-09-INTEG14	Release of radioactive aerosols to the atmosphere caused by spray leak of slurry from vent station due to piping system leak.	Flammable gas explosion from release of trapped flammable gas within pipe combined with ignition source	F2	E3
RCSTS-09-INTEG15	Release of radioactive aerosols to the atmosphere caused by spray leak of slurry from vent station due to piping system leak.	Failure of piping due to material defect	F2	E3
RCSTS-09-INTEG16	Release of radioactive aerosols to the atmosphere caused by spray leak of slurry from vent station due to piping system leak.	Seismic event	F1	E3
RCSTS-09-INTEG17	Release of radioactive aerosols to the atmosphere caused by spray leak of supernate from vent station due to piping system leak.	Seismic event	F1	E3
RCSTS-09-PRES04	Release of radioactive aerosols to the atmosphere caused by spray leak of slurry from vent station due to piping system leak.	Water hammer	F3	E3
RCSTS-09-PRES05	Release of radioactive aerosols to the atmosphere caused by spray leak of supernate from vent station due to piping system leak.	Water hammer	F3	E3
RCSTS-09-TEMP03	Release of radioactive aerosols to the atmosphere caused by spray leak of slurry from vent station due to piping system leak.	Freezing of piping within the vent station due to cold temperatures caused by running the exhauster	F2	E3
RCSTS-09-TEMP04	Release of radioactive aerosols to the atmosphere caused by spray leak of supernate from vent station due to piping system leak.	Freezing of piping within the vent station due to cold temperatures caused by running the exhauster	F2	E3
RCSTS-22-PRESS01*	Release of radioactive aerosols to the atmosphere caused by spray leak of slurry from 244-A Lift Station due to piping system leak.	Dead heading of flow through the 244-A Lift Station with failure of PRV and development of crack in downstream piping	F3	E3
RCSTS-22-PRESS02*	Release of radioactive aerosols to the atmosphere caused by spray leak of supernate from 244-A Lift Station due to piping system leak.	Dead heading of flow through the 244-A Lift Station with failure of PRV and development of crack in downstream piping	F3	E3

Table C-4. Hazardous Conditions with Potential Severe Environmental Consequences (E2 and E3). (14 sheets)

ID	Hazardous Conditions	Cause	Freq NC	Env Cons
RCSTS-22-PRESS03*	Release of radioactive supernate to soil surface from overflow of 244-A Lift Station due to piping break.	Dead heading of flow through the 244-A Lift Station with failure of PRV and subsequent downstream pipe failure	F3	E3
RCSTS-22-PRESS04*	Release of radioactive slurry to soil surface from overflow of 244-A Lift Station due to piping break.	Dead heading of flow through the 244-A Lift Station with failure of PRV and subsequent downstream pipe failure	F3	E3
RCSTS-24-FLOW/INTEG07	Release of radioactive aerosols to the atmosphere caused by spray leak of slurry from lift station due to piping system leak.	Failure of jumper due to corrosion	F2	E3
RCSTS-24-FLOW/INTEG08	Release of radioactive aerosols to the atmosphere caused by spray leak of supernate from lift station due to piping system leak.	Failure of jumper due to corrosion	F2	E3
RCSTS-24-FLOW/INTEG09	Release of radioactive aerosols to the atmosphere caused by spray leak of slurry from lift station due to piping system leak.	Failure of jumper due to gasket failure	F3	E3
RCSTS-24-FLOW/INTEG10	Release of radioactive aerosols to the atmosphere caused by spray leak of supernate from lift station due to piping system leak.	Failure of jumper due to gasket failure	F3	E3
RCSTS-24-FLOW/INTEG11	Release of radioactive aerosols to the atmosphere caused by spray leak of slurry from lift station due to piping system leak.	Failure of jumper due to misalignment	F3	E3
RCSTS-24-FLOW/INTEG12	Release of radioactive aerosols to the atmosphere caused by spray leak of supernate from lift station due to piping system leak.	Failure of jumper due to misalignment	F3	E3
RCSTS-24-FLOW05	Release of radioactive aerosols to the atmosphere caused by spray leak of slurry from lift station due to piping system leak.	Computer failure or human error causing misrouting of material when flow path is not completely connected	F3	E3
RCSTS-24-FLOW06	Release of radioactive aerosols to the atmosphere caused by spray leak of supernate from lift station due to piping system leak.	Computer failure or human error causing misrouting of material when flow path is not completely connected	F3	E3
RCSTS-24-FLOW07	Release of radioactive aerosols to the atmosphere caused by spray leak of slurry from lift station due to piping system leak.	External leak of valve or valves to the lift station	F3	E3
RCSTS-24-FLOW08	Release of radioactive aerosols to the atmosphere caused by spray leak of supernate from lift station due to piping system leak.	External leak of valve or valves to the lift station	F3	E3
RCSTS-24-INTEG07	Release of radioactive aerosols to the atmosphere caused by spray leak of slurry from lift station due to piping system leak.	External event (airplane crash, etc)	F0	E3
RCSTS-24-INTEG08	Release of radioactive aerosols to the atmosphere caused by spray leak of supernate from lift station due to piping system leak.	External event (airplane crash, etc)	F0	E3
RCSTS-24-INTEG09	Release of radioactive aerosols to the atmosphere caused by spray leak of slurry from lift station due to piping system leak.	Seismic event	F1	E3

Table C-4. Hazardous Conditions with Potential Severe Environmental Consequences (E2 and E3). (14 sheets)

ID	Hazardous Conditions	Cause	Freq NC	Env Cons
RCSTS-24-INTEG10	Release of radioactive aerosols to the atmosphere caused by spray leak of supernate from lift station due to piping system leak.	Seismic event	F1	E3
RCSTS-01-FLOW03	Release of radioactive supernate to the soil surface from overflow of Tank 241-SY-102 due to mistransfer.	Mistransfer of material from east area via the supernate piping route.	F3	E2
RCSTS-03-FLOW/INTEG01	Release of radioactive slurry to the soil surface from overflow in the SY-A or SY-B valve pit due to piping system leak (pool).	Failure of jumper due to misalignment (human error).	F3	E2
RCSTS-03-FLOW/INTEG02a	Release of radioactive supernate to the soil surface from overflow in the SY-A or SY-B valve pit due to piping system leak (pool).	Failure of jumper due to misalignment (human error)	F3	E2
RCSTS-03-FLOW/INTEG02b	Release of radioactive supernate to the soil surface from overflow in the SY-A or SY-B valve pit due to piping system leak (pool).	Failure of jumper due to gasket failure	F2	E2
RCSTS-03-FLOW/INTEG02c	Release of radioactive supernate to the soil surface from overflow in the SY-A or SY-B valve pit due to piping system leak (pool).	Failure of jumper due to corrosion	F2	E2
RCSTS-03-FLOW02	Release of radioactive slurry to the soil surface from overflow in the SY-A or SY-B valve pit due to piping system leak (pool).	Computer failure or human error causing misrouting of material when flow path is not completely connected	F3	E2
RCSTS-03-FLOW03	Release of radioactive slurry to the soil surface from overflow in the SY-A or SY-B valve pit due to piping system leak (pool).	External leak of valve or valves to the valve pit	F2	E2
RCSTS-03-FLOW04	Release of radioactive supernate to the soil surface from overflow in the SY-A or SY-B valve pit due to piping system leak (pool).	Computer failure or human error causing misrouting of material when flow path is not completely connected	F3	E2
RCSTS-03-FLOW05	Release of radioactive supernate to the soil surface from overflow in the SY-A or SY-B valve pit due to piping system leak (pool).	External leak of valve or valves to the valve pit	F2	E2
RCSTS-03-INTEG01	Release of radioactive aerosols to the atmosphere from the SY valve pit due to fire or explosion of flammable gas.	Fire or explosion in the valve pit caused by buildup of flammable gas because of spill of supernate or slurry	F2	E2
RCSTS-03-INTEG02	Release of radioactive aerosols to the atmosphere from the SY valve pit due to fire or explosion of flammable gas.	Fire or explosion due to leakage of flammable gas due to pipe breach in slurry line caused by gas release from slurry	F2	E2
RCSTS-03-INTEG05	Release of radioactive slurry to the soil surface from overflow in the SY-A or SY-B valve pit due to piping system leak.	External event (airplane crash, etc)	F0	E2
RCSTS-03-INTEG06	Release of radioactive slurry to the soil surface from overflow in the SY-A or SY-B valve pit due to piping system leak.	Seismic event	F1	E2
RCSTS-03-INTEG07	Release of radioactive supernate to the soil surface from overflow in the SY-A or SY-B valve pit due to piping system leak.	External event (airplane crash, etc)	F0	E2

Table C-4. Hazardous Conditions with Potential Severe Environmental Consequences (E2 and E3). (14 sheets)

ID	Hazardous Conditions	Cause	Freq NC	Env Cons
RCSTS-03-INTEG08	Release of radioactive supernate to the soil surface from overflow in the SY-A or SY-B valve pit due to piping system leak (pool).	Seismic event	F1	E2
RCSTS-03-PRES02	Release of radioactive slurry to the soil surface from overflow in the SY-A or SY-B valve pit due to piping system leak (pool).	Water hammer	F3	E2
RCSTS-03-PRES03	Release of radioactive supernate to the soil surface from overflow in the SY-A or SY-B valve pit due to piping system leak (pool).	Water hammer	F3	E2
RCSTS-04/05-INTEG01a	Release of radioactive supernate to the soil surface from the underground piping between the SY-A or SY-B valve pit and a diversion box due to piping system leak.	Failure of primary and encasement piping due to corrosion	F2	E2
RCSTS-04/05-INTEG01b	Release of radioactive supernate to the soil surface from the underground piping between the SY-A or SY-B valve pit and a diversion box due to piping system leak.	Failure of primary and encasement piping due to unrecognized material flaw	F2	E2
RCSTS-04/05-INTEG02	Release of radioactive supernate to the soil surface from the underground piping between the SY-A or SY-B valve pit and a diversion box due to piping system leak.	Failure of primary and encasement piping due to external event (airplane crash, volcanism, etc)	FO	E2
RCSTS-04/05-INTEG03	Release of radioactive supernate to the soil surface from the underground piping between the SY-A or SY-B valve pit and the diversion box due to piping system leak.	Failure of primary and encasement piping due to external event (excavation accident)	F3	E2
RCSTS-04/05-INTEG04	Release of radioactive supernate to the soil surface from the underground piping between the SY-A or SY-B valve pit and a diversion box due to piping system leak.	Failure of primary and encasement piping due to external event (undermining from broken fluid transfer lines in vicinity)	F2	E2
RCSTS-04/05-INTEG05	Release of radioactive supernate to the soil surface from the underground piping between the SY-A or SY-B valve pit and a diversion box due to piping system leak.	Failure of primary and encasement piping due to seismic event	F1	E2
RCSTS-04/05-TEMP01	Release of radioactive supernate to the soil surface from the underground piping between the SY-A or SY-B valve pit and a diversion box due to piping system leak.	Failure of primary and encasement piping due to freezing	F1	E2
RCSTS-08-FLOW03	Release of radioactive supernate to soil surface from overflow of diversion box due to piping system leak.	External leak of valve or valves to the diversion box	F3	E2
RCSTS-08-FLOW04	Release of radioactive slurry to soil surface from overflow of diversion box due to piping system leak.	External leak of valve or valves to the diversion box	F3	E2
RCSTS-08-FLOW05	Release of radioactive supernate to soil surface from overflow of diversion box due to piping system leak.	Backflow of supernate to sump pump line, through sump pump and onto diversion box floor	F3	E2
RCSTS-08-INTEG01	Release of radioactive slurry to soil surface from overflow of diversion box due to piping system leak.	Failure of piping due to corrosion	F2	E2
RCSTS-08-INTEG02	Release of radioactive slurry to soil surface from overflow of diversion box due to piping system leak.	External event (airplane crash, etc)	FO	E2

Table C-4. Hazardous Conditions with Potential Severe Environmental Consequences (E2 and E3). (14 sheets)

ID	Hazardous Conditions	Cause	Freq NC	Env Cons
RCSTS-08-INTEG03	Release of radioactive slurry to soil surface from overflow of diversion box due to piping system leak.	Flammable gas explosion from release of trapped flammable gas within pipe combined with ignition source	F2	E2
RCSTS-08-INTEG04	Release of radioactive slurry to soil surface from overflow of diversion box due to piping system leak.	Failure of piping due to material defect	F2	E2
RCSTS-08-INTEG05	Release of radioactive slurry to soil surface from overflow of diversion box due to piping system leak.	Slurry pump overspeed causing catastrophic failure of pump with missiles damaging pipe	F1	E2
RCSTS-08-INTEG06	Release of radioactive slurry to soil surface from overflow of diversion box due to piping system leak.	Seismic event	F1	E2
RCSTS-08-INTEG07	Release of radioactive supernate to soil surface from overflow of diversion box due to piping system leak.	Seismic event	F1	E2
RCSTS-08-INTEG17a	Release of radioactive supernate to the soil surface from overflow of diversion box due to piping system leak.	Failure of piping due to corrosion plus mitigative features failure	F2	E2
RCSTS-08-INTEG17b	Release of radioactive supernate to the soil surface from overflow of diversion box due to piping system leak.	Failure of piping due to unrecognized material flaw	F2	E2
RCSTS-08-INTEG18	Release of radioactive supernate to the soil surface from overflow of diversion box due to piping system leak.	Failure of piping due to external event (airplane crash, volcanism, etc)	F0	E2
RCSTS-08-PRES02	Release of radioactive slurry to soil surface from overflow of diversion box due to piping system leak.	Water hammer	F3	E2
RCSTS-08-PRES03	Release of radioactive supernate to soil surface from overflow of diversion box due to piping system leak.	Water hammer	F3	E2
RCSTS-08-TEMP01	Release of radioactive slurry to soil surface from overflow of diversion box due to piping system leak.	Freezing of piping within the diversion box due to cold temperatures caused by running the exhauster	F2	E2
RCSTS-08-TEMP04	Release of radioactive supernate to the soil surface from overflow of diversion box due to piping system leak.	Failure of piping due to freezing	F1	E2
RCSTS-09-FLOW01	Release of radioactive slurry to soil surface from overflow of vent station due to piping system leak.	Flow of slurry to vent station due to incomplete closing of vent valves after venting	F3	E2
RCSTS-09-FLOW04	Release of radioactive slurry to soil surface from overflow of vent station due to piping system leak.	External leak of valve or valves to the vent station	F3	E2
RCSTS-09-FLOW05	Release of radioactive supernate to soil surface from overflow of vent station due to piping system leak.	External leak of valve or valves to the vent station	F3	E2
RCSTS-09-FLOW06	Release of radioactive supernate to soil surface from overflow of vent station due to piping system leak.	Flow of supernate to vent station due to incomplete closing of vent valves after venting	F3	E2

Table C-4. Hazardous Conditions with Potential Severe Environmental Consequences (E2 and E3). (14 sheets)

ID	Hazardous Conditions	Cause	Freq NC	Env Cons
RCSTS-09-FLOW07	Release of radioactive supernate to soil surface from overflow of vent station due to piping system leak.	Backflow of supernate to sump pump line, through sump pump and onto vent station floor	F3	E2
RCSTS-09-INTEG01	Release of radioactive slurry to soil surface from overflow of vent station due to piping system leak.	Failure of piping due to corrosion	F2	E2
RCSTS-09-INTEG02	Release of radioactive supernate to soil surface from overflow of vent station due to piping system leak.	Failure of piping due to corrosion	F2	E2
RCSTS-09-INTEG03	Release of radioactive slurry to soil surface from overflow of vent station due to piping system leak.	External event (airplane crash, etc)	F0	E2
RCSTS-09-INTEG04	Release of radioactive supernate to soil surface from overflow of vent station due to piping system leak.	External event (airplane crash, etc)	F0	E2
RCSTS-09-INTEG05	Release of radioactive slurry to soil surface from overflow of vent station due to piping system leak.	Flammable gas explosion from release of trapped flammable gas within pipe combined with ignition source	F2	E2
RCSTS-09-INTEG06	Release of radioactive aerosols to the atmosphere from the vent station due to fire or explosion of flammable gas.	Fire or explosion in the vent station caused by buildup of flammable gas because of spill of supernate or slurry to vent station	F2	E2
RCSTS-09-INTEG07	Release of radioactive slurry to soil surface from overflow of vent station due to piping system leak.	Failure of piping due to material defect	F2	E2
RCSTS-09-INTEG08	Release of radioactive supernate to soil surface from overflow of vent station due to piping system leak.	Failure of piping due to material defect	F2	E2
RCSTS-09-INTEG09	Release of radioactive slurry to soil surface from overflow of vent station due to piping system leak.	Seismic event	F1	E2
RCSTS-09-INTEG10	Release of radioactive supernate to soil surface from overflow of vent station due to piping system leak.	Seismic event	F1	E2
RCSTS-09-PRES01	Release of radioactive slurry to soil surface from overflow of vent station due to piping system leak.	Water hammer	F3	E2
RCSTS-09-PRES02	Release of radioactive supernate to soil surface from overflow of vent station due to piping system leak.	Water hammer	F3	E2
RCSTS-09-TEMP01	Release of radioactive slurry to soil surface from overflow of vent station due to piping system leak.	Freezing of piping within the vent station due to cold temperatures caused by running the exhauster	F2	E2
RCSTS-09-TEMP02	Release of radioactive supernate to soil surface from overflow of vent station due to piping system leak.	Freezing of piping within the vent station due to cold temperatures caused by running the exhauster	F2	E2

Table C-4. Hazardous Conditions with Potential Severe Environmental Consequences (E2 and E3). (14 sheets)

ID	Hazardous Conditions	Cause	Freq NC	Env Cons
RCSTS-10/11-INTEG01	Release of radioactive supernate to the soil from the underground piping between the diversion box and the vent station due to piping system leak.	Failure of primary and encasement piping due to external event (undermining from broken fluid transfer lines in vicinity)	F3	E2
RCSTS-10/11-INTEG02a	Release of radioactive supernate to the soil from the underground piping between the diversion box and the vent station due to piping system leak.	Failure of primary and encasement piping due to corrosion	F2	E2
RCSTS-10/11-INTEG02b*	Release of radioactive supernate to the soil subsurface from the underground piping between the diversion box and the vent station due to piping system leak.	Failure of primary and encasement piping due to corrosion	F2	E2
RCSTS-10/11-INTEG03a	Release of radioactive supernate to the soil from the underground piping between the diversion box and the vent station due to piping system leak.	Failure of primary and encasement piping due to external event (excavation accident)	F3	E2
RCSTS-10/11-INTEG03b*	Release of radioactive supernate to the atmosphere from the underground piping between the diversion box and the vent station due to excavation of piping system and subsequent leak.	Failure of primary and encasement piping due to external event (excavation accident)	F3	E2
RCSTS-10/11-INTEG04	Release of radioactive supernate to the soil from the underground piping between the diversion box and the vent station due to piping system leak.	Failure of primary and encasement piping due to external event (airplane crash, volcanism etc)	F0	E2
RCSTS-10/11-INTEG05a	Release of radioactive supernate to the soil from the underground piping between the diversion box and the vent station due to piping system leak.	Failure of primary and encasement piping due to unrecognized material flaw	F2	E2
RCSTS-10/11-INTEG05b*	Release of radioactive supernate to the soil subsurface from the underground piping between the diversion box and the vent station due to piping system leak.	Failure of primary and encasement piping due to unrecognized material flaw	F2	E2
RCSTS-10/11-INTEG06	Release of radioactive supernate to the soil from the underground piping between the diversion box and the vent station due to piping system leak.	Failure of primary and encasement piping due to seismic event	F1	E2
RCSTS-10/11-PRES01a	Release of radioactive supernate to the soil from the underground piping between the diversion box and the vent station due to piping system leak.	Failure of primary and encasement piping due to water hammer	F3	E2
RCSTS-10/11-PRES01b*	Release of radioactive supernate to the soil subsurface from the underground piping between the diversion box and the vent station due to piping system leak.	Failure of primary and encasement piping due to water hammer	F3	E2
RCSTS-10/11-TEMP01	Release of radioactive supernate to the soil from the underground piping between the diversion box and the vent station due to piping system leak.	Failure of primary piping and encasement due to freezing	F1	E2
RCSTS-10/11-TEMP02	Release of radioactive supernate to the soil from the underground piping between the diversion box and the vent station due to piping system leak.	Failure of primary and encasement piping due to thermal stress	F3	E2
RCSTS-12/13-INTEG01	Release of radioactive supernate to the soil from the underground piping between the vent station and the 244-A Lift Station due to piping system leak.	Failure of primary and encasement piping due to external event (undermining from broken fluid transfer lines in vicinity)	F3	E2
RCSTS-12/13-INTEG02a	Release of radioactive supernate to the soil from the underground piping between the vent station and the 244-A Lift Station due to piping system leak.	Failure of primary and encasement piping due to corrosion	F2	E2

Table C-4. Hazardous Conditions with Potential Severe Environmental Consequences (E2 and E3). (14 sheets)

ID	Hazardous Conditions	Cause	Freq NC	Env Cons
RCSTS-12/13-INTEGO2b*	Release of radioactive supernate to the soil subsurface from the underground piping between the vent station and the 244-A Lift Station due to piping system leak.	Failure of primary and encasement piping due to corrosion	F2	E2
RCSTS-12/13-INTEGO3a	Release of radioactive supernate to the soil from the underground piping between the vent station and the 244-A Lift Station due to piping system leak.	Failure of primary and encasement piping due to external event (excavation accident)	F3	E2
RCSTS-12/13-INTEGO3b*	Release of radioactive supernate to the atmosphere from the underground piping between the vent station and the 244-A Lift Station due to excavation of piping system and subsequent leak.	Failure of primary and encasement piping due to external event (excavation accident)	F3	E2
RCSTS-12/13-INTEGO4	Release of radioactive supernate to the soil from the underground piping between the vent station and the 244-A Lift Station due to piping system leak.	Failure of primary and encasement piping due to external event (airplane crash, volcanism etc)	F0	E2
RCSTS-12/13-INTEGO5a	Release of radioactive supernate to the soil from the underground piping between the vent station and the 244-A Lift Station due to piping system leak.	Failure of primary and encasement piping due to unrecognized material flaw	F2	E2
RCSTS-12/13-INTEGO5b*	Release of radioactive supernate to the soil subsurface from the underground piping between the vent station and the 244-A Lift Station due to piping system leak.	Failure of primary and encasement piping due to unrecognized material flaw	F2	E2
RCSTS-12/13-INTEGO6	Release of radioactive supernate to the soil from the underground piping between the vent station and the 244-A Lift Station due to piping system leak.	Failure of primary and encasement piping due to seismic event	F1	E2
RCSTS-12/13-PRESO1a	Release of radioactive supernate to the soil from the underground piping between the vent station and the 244-A Lift Station due to piping system leak.	Failure of primary and encasement piping due to steam hammer caused by loss of flushwater flow to steam mixing chamber in east	F3	E2
RCSTS-12/13-PRESO1b*	Release of radioactive supernate to the soil subsurface from the underground piping between the vent station and the 244-A Lift Station due to piping system leak.	Failure of primary and encasement piping due to steam hammer caused by loss of flushwater flow to steam mixing chamber in east area	F3	E2
RCSTS-12/13-PRESO2	Release of radioactive supernate to the soil from the underground piping between the vent station and the 244-A Lift Station due to piping system leak.	Failure of primary and encasement piping due to water hammer	F3	E2
RCSTS-12/13-TEMPO1	Release of radioactive supernate to the soil from the underground piping between the vent station and the 244-A Lift Station due to piping system leak.	Failure of primary piping and encasement due to freezing	F1	E2
RCSTS-12/13-TEMPO2	Release of radioactive supernate to the soil from the underground piping between the vent station and the 244-A Lift Station due to piping system leak.	Failure of primary and encasement piping due to thermal stress	F3	E2
RCSTS-15/16-INTEGO1a	Release of radioactive slurry to the soil surface from the underground piping between the SY-A or SY-B valve pit and a diversion box due to piping system leak.	Failure of primary and encasement piping due to corrosion	F2	E2
RCSTS-15/16-INTEGO1b	Release of radioactive slurry to the soil surface from the underground piping between the SY-A or SY-B valve pit and a diversion box due to piping system leak.	Failure of primary and encasement piping due to unrecognized material flaw	F2	E2
RCSTS-15/16-INTEGO2	Release of radioactive slurry to the soil surface from the underground piping between the SY-A or SY-B valve pit and the diversion box due to piping system leak.	Failure of primary and encasement piping due to external event (excavation accident)	F2	E2

Table C-4. Hazardous Conditions with Potential Severe Environmental Consequences (E2 and E3). (14 sheets)

ID	Hazardous Conditions	Cause	Freq NC	Env Cons
RCSTS-15/16-INTEG03a	Release of radioactive slurry to the soil surface from the underground piping between the SY-A or SY-B valve pit and a diversion box due to piping system leak.	Failure of primary and encasement piping due to external event (undermining from broken fluid transfer lines in vicinity)	F3	E2
RCSTS-15/16-INTEG03b	Release of radioactive slurry to the soil surface from overflow of diversion box due to piping system leak.	Failure of piping due to external event (undermining from broken fluid transfer lines in vicinity)	F2	E2
RCSTS-15/16-INTEG04	Release of radioactive slurry to the soil surface from the underground piping between the SY-A or SY-B valve pit and the diversion box due to piping system leak.	Failure of primary and encasement piping due to seismic event	F1	E2
RCSTS-15/16-INTEG05	Release of radioactive slurry to the soil surface from the underground piping between the SY-A or SY-B valve pit and a diversion box due to piping system leak.	Failure of primary and encasement piping due to external event (airplane crash, volcanism, etc)	F0	E2
RCSTS-15/16-TEMP01	Release of radioactive slurry to the soil surface from the underground piping between the SY-A or SY-B valve pit and a diversion box due to piping system leak.	Failure of primary and encasement piping due to freezing	F1	E2
RCSTS-18/19-INTEG01	Release of radioactive slurry to the soil from the underground piping between the diversion box and the vent station due to piping system leak.	Failure of primary and encasement piping due to external event (undermining from broken fluid transfer lines in vicinity)	F3	E2
RCSTS-18/19-INTEG02	Release of radioactive slurry to the soil from the underground piping between the diversion box and the vent station due to piping system leak.	Failure of primary and encasement piping due to corrosion	F2	E2
RCSTS-18/19-INTEG03a	Release of radioactive slurry to the soil from the underground piping between the diversion box and the vent station due to piping system leak.	Failure of primary and encasement piping due to external event (excavation accident)	F3	E2
RCSTS-18/19-INTEG03b*	Release of radioactive slurry to the atmosphere from the underground piping between the diversion box and the vent station due to excavation of piping system and subsequent leak.	Failure of primary and encasement piping due to external event (excavation accident)	F3	E2
RCSTS-18/19-INTEG04	Release of radioactive slurry to the soil from the underground piping between the diversion box and the vent station due to piping system leak.	Failure of primary and encasement piping due to external event (airplane crash, volcanism etc)	F0	E2
RCSTS-18/19-INTEG05	Release of radioactive slurry to the soil from the underground piping between the diversion box and the vent station due to piping system leak.	Failure of primary and encasement piping due to flammable gas explosion in primary piping	F2	E2
RCSTS-18/19-INTEG06	Release of radioactive slurry to the soil from the underground piping between the diversion box and the vent station due to piping system leak.	Failure of primary and encasement piping due to unrecognized material flaw	F2	E2
RCSTS-18/19-INTEG07	Release of radioactive slurry to the soil from the underground piping between the diversion box and the vent station due to piping system leak.	Failure of primary and encasement piping due to seismic event	F1	E2
RCSTS-18/19-PRES01	Release of radioactive slurry to the soil from the underground piping between the diversion box and the vent station due to piping system leak.	Failure of primary and encasement piping due to water hammer	F3	E2
RCSTS-18/19-TEMP01	Release of radioactive slurry to the soil from the underground piping between the diversion box and the vent station due to piping system leak.	Failure of primary piping and encasement due to freezing	F1	E2

Table C-4. Hazardous Conditions with Potential Severe Environmental Consequences (E2 and E3). (14 sheets)

ID	Hazardous Conditions	Cause	Freq NC	Env Cons
RCSTS-18/19-TEMP02	Release of radioactive slurry to the soil from the underground piping between the diversion box and the vent station due to piping system leak.	Failure of primary and encasement piping due to thermal stress	F3	E2
RCSTS-1FS-LEVEL03	Release of caustic solution and radionuclides to the sump pit from the water flush tank due to over filling of tank.	Overfilling of flush tank from flow of radioactive waste from transfer line. Block valves open, valve limit switch and pressure switch fail and administrative control of raw water block valves fail	F2	E2
RCSTS-24-FLOW/INTEG01	Release of radioactive slurry to soil surface from overflow of lift station due to piping system leak.	Failure of jumper due to corrosion	F2	E2
RCSTS-24-FLOW/INTEG02	Release of radioactive supernate to soil surface from overflow of 244-A Lift Station due to piping system leak.	Failure of jumper due to corrosion	F2	E2
RCSTS-24-FLOW/INTEG03	Release of radioactive slurry to soil surface from overflow of lift station due to piping system leak.	Failure of jumper due to gasket failure	F3	E2
RCSTS-24-FLOW/INTEG04	Release of radioactive supernate to soil surface from overflow of 244-A Lift Station due to piping system leak.	Failure of jumper due to gasket failure	F3	E2
RCSTS-24-FLOW/INTEG05	Release of radioactive slurry to soil surface from overflow of lift station due to piping system leak.	Failure of jumper due to misalignment	F3	E2
RCSTS-24-FLOW/INTEG06	Release of radioactive supernate to soil surface from overflow of 244-A Lift Station due to piping system leak.	Failure of jumper due to misalignment	F3	E2
RCSTS-24-FLOW01	Release of radioactive slurry to soil surface from overflow of lift station due to piping system leak.	Computer failure or human error causing misrouting of material when flow path is not completely connected	F3	E2
RCSTS-24-FLOW02	Release of radioactive supernate to soil surface from overflow of 244-A Lift Station due to piping system leak.	Computer failure or human error causing misrouting of material when flow path is not completely connected	F3	E2
RCSTS-24-FLOW03	Release of radioactive slurry to soil surface from overflow of lift station due to piping system leak.	External leak of valve or valves to the lift station	F3	E2
RCSTS-24-FLOW04	Release of radioactive supernate to soil surface from overflow of 244-A Lift Station due to piping system leak.	External leak of valve or valves to the lift station	F3	E2
RCSTS-24-INTEG01	Release of radioactive slurry to soil surface from overflow of lift station due to piping system leak.	External event (airplane crash, etc)	F0	E2
RCSTS-24-INTEG02	Release of radioactive supernate to soil surface from overflow of 244-A Lift Station due to piping system leak.	External event (airplane crash, etc)	F0	E2

Table C-4. Hazardous Conditions with Potential Severe Environmental Consequences (E2 and E3). (14 sheets)

ID	Hazardous Conditions	Cause	Freq NC	Env Cons
RCSTS-24-INTEG03	Release of radioactive aerosols to the atmosphere from the lift station due to fire or explosion of flammable gas.	Fire or explosion in the lift station caused by buildup of flammable gas because of spill of supernate or slurry	F2	E2
RCSTS-24-INTEG04	Release of radioactive slurry to soil surface from overflow of lift station due to piping system leak.	Seismic event	F1	E2
RCSTS-24-INTEG05	Release of radioactive supernate to soil surface from overflow of 244-A Lift Station due to piping system leak.	Seismic event	F1	E2
RCSTS-24-INTEG06	Release of radioactive aerosols to the atmosphere from the lift station due to fire or explosion of flammable gas.	Fire or explosion due to leakage of flammable gas due to pipe breach in slurry line caused by gas release from slurry	F2	E2
RCSTS-24-PRES01	Release of radioactive supernate to soil surface from overflow of 244-A Lift Station due to piping system leak.	Steam hammer or thermal stress caused by loss of flushwater flow to steam mixing chamber in east area	F3	E2
RCSTS-24-PRES02	Release of radioactive slurry to soil surface from overflow of lift station due to piping system leak.	Water hammer	F3	E2
RCSTS-24-PRES03	Release of radioactive supernate to soil surface from overflow of 244-A Lift Station due to piping system leak.	Water hammer	F3	E2
RCSTS-2FS-FLOW01	Release of caustic solution spray to the atmosphere from the water flush system due to a transfer line break.	Line break (upstream of flush pump) due to structural failure	F2	E2
RCSTS-2FS-FLOW02	Release of caustic solution spray to the atmosphere from the water flush system due to a transfer line break.	Line break (downstream of flush pump) due to structural failure	F2	E2
RCSTS-2FS-FLOW03	Release of caustic solution spray to the atmosphere from the water flush system due to a transfer line break.	Line plug - before heaters due to debris buildup causing a pressure buildup and failure of line	F2	E2
RCSTS-2FS-FLOW04	Release of caustic solution spray to the atmosphere from the water flush system due to a transfer line break.	Line plug - after heaters due to debris buildup causing pressure buildup at the heater and resulting in heater pipe failure	F2	E2
RCSTS-2FS-FLOW05	Release of caustic solution spray to the atmosphere from the water flush system due to a relief valve failure.	Caustic injection pressure relief valve failure	F3	E2
RCSTS-2FS-FLOW07	Release of caustic solution spray to the atmosphere from the water flush system due to a transfer line break.	Flush line break due to structural failure	F2	E2
RCSTS-2FS-PRES01	Release of caustic solution spray to the atmosphere from the water flush system due line plug.	Flush line plug - before heaters due to debris buildup causing a pressure buildup and failure of line	F2	E2

Table C-4. Hazardous Conditions with Potential Severe Environmental Consequences (E2 and E3). (14 sheets)

ID	Hazardous Conditions	Cause	Freq NC	Env Cons
RCSTS-2FS-PRES02	Release of caustic solution spray to the atmosphere from the water flush system due to a line plug.	Flush line plug - after heaters due to debris buildup causing pressure buildup at the heater and resulting in heater pipe failure	F2	E2
RCSTS-2FS-PRES03	Release of caustic solution spray to the atmosphere from the water flush system due to a line break.	Flush line break due to structural failure	F2	E2
RCSTS-2FS-TEMP01	Release of caustic solution spray to the atmosphere from the water flush system due to a line plug.	Flush line plug - before heaters due to debris buildup causing a pressure buildup and failure of line	F2	E2
RCSTS-2FS-TEMP02	Release of caustic solution spray to the atmosphere from the water flush system due to freezing conditions.	Freezing weather with loss of heat trace function	F2	E2
RCSTS-4FS-FLOW03	Release of caustic to the atmosphere from the caustic system due to pressure relief valve failing open.	Pressure relief valve fails open	F2	E2
RCSTS-4FS-FLOW04	Release of caustic to the atmosphere from the caustic system due to over pressurization of line and failure of pressure relief valve to open.	Back pressure valve fails in closed position	F2	E2
RCSTS-4FS-FLOW05	Release of caustic to the atmosphere from the caustic system due to line failure in chemical injection package.	Line failure/leak due to structural failure	F2	E2
RCSTS-4FS-FLOW06	Release of caustic to the atmosphere from the caustic system due to a caustic system drain valve leak.	Caustic drain valve leak	F2	E2
RCSTS-4FS-PRES/TEMP01	Release of caustic to the atmosphere from the caustic system due to pressure relief valve failing open.	Pressure relief valve fails open on caustic injection system.	F2	E2
RCSTS-4FS-PRES/TEMP02	Release of caustic to the atmosphere from the caustic system due to pressure relief valve failing in closed position and rupture of line.	Back pressure relief valve fails in closed position.	F3	E2
RCSTS-5FS-FLOW01	Release of caustic to the atmosphere from caustic line due to a line break.	Line break due to structural failure.	F2	E2
RCSTS-5FS-FLOW02	Release of caustic to the atmosphere from caustic line due to a line break.	Line plug due to debris buildup causing pressure buildup resulting in pipe failure.	F2	E2

Table C-5. Hazardous Conditions With Potential Radiation Exposure Consequences (RP).

ID	Hazardous Conditions	Cause
RCSTS-03-FLOW01	Release of radioactive slurry or supernate to the SY flush pit from transfer line due to backflow.	Reverse flow to flush pit caused by improper valving sequence
RCSTS-08-AIR01	Release of radioactive vapors to the diversion box atmosphere from accumulated waste in diversion box due to pipe encasement draining.	Draining of the encasement
RCSTS-08-AIR03	Release of radioactive vapors to the diversion box atmosphere due to waste being present in box.	Leak of waste solution
RCSTS-08-RAD01	Release of radioactive material to the diversion box from transfer piping due to encasement draining.	Draining of the encasement
RCSTS-08-RAD02	Release of radioactive material to the diversion box from transfer line due to pipe leak.	Leak of waste solution
RCSTS-08-RAD03	High radiation dose to worker from the diversion box due to the presence of residual radioactive contamination.	Holdup of radionuclides due to trapped radioactive material in pumps or pipes
RCSTS-09-AIR02	Release of radioactive vapors to the vent station atmosphere due to waste being present in station.	Leak of waste solution
RCSTS-09-RAD02	Release of radioactive material to the vent station from transfer line due to pipe leak.	Leak of waste solution
RCSTS-09-RAD03	High radiation dose to worker from the vent station due to the presence of residual radioactive contamination.	Holdup of radionuclides due to trapped radioactive material in pipes
RCSTS-5FS-FLOW03	Release of radioactive material into water flush tank due to loss of flush system pump operation.	Loss of pump pressure during flush operation causing back flow of waste

This page intentionally left blank.

Table C-6. Hazardous Conditions With Potential Occupational Safety Consequences (OCC). (2 sheets)

ID	Hazardous Conditions	Cause
RCSTS-08-AIR02	Exposure to chemical vapors and liquids in diversion box due to the spill or leak of chemicals in confined space.	Chemicals brought in for decontamination and maintenance
RCSTS-08-AIR04	Release of chemical waste into diversion box from leak of waste solution resulting in worker exposure.	Leak of waste solution
RCSTS-08-OCC01	Worker injury due to welding gas bottle becoming a missile in diversion box.	Damage from welding gas bottle during maintenance activity in diversion box
RCSTS-08-OCC02	Worker discomfort from cold temperatures in diversion box.	Running an exhauster during cold weather
RCSTS-09-AIR03	Exposure to chemical vapors and liquids in vent station due to the spill or leak of chemicals.	Chemicals brought in for decontamination and maintenance
RCSTS-09-AIR04	Release of chemical waste into diversion box from leak of waste solution resulting in worker exposure.	Leak of waste solution
RCSTS-09-OCC01	Worker injury due to welding gas bottle becoming a missile in vent station.	Damage from welding gas bottle during maintenance activity in vent station
RCSTS-09-OCC02	Worker discomfort from cold temperatures in vent station.	Running an exhauster during cold weather
RCSTS-1FS-LEVEL01	Release of caustic solution to the sump pit from the water flush tank due to over filling of tank.	Operator error - overfill of caustic material
RCSTS-1FS-LEVEL04	Release of caustic solution to the sump pit from the water flush tank due to human error.	Human error - drain valve left open
RCSTS-1FS-LEVEL05	Release of caustic solution to the sump pit from the water flush tank due to drain valve failure.	Drain valve fails open
RCSTS-1FS-LEVEL06	Release of caustic solution to the sump pit from the water flush tank due to tank connection failure.	Structural failure of flush tank connections
RCSTS-1FS-LEVEL07	Release of caustic solution to the sump pit from the water flush tank due to tank structural failure.	Structural failure of flush tank
RCSTS-1FS-PRES01	Release of caustic solution to the sump pit from the water flush tank due to tank failure.	Tank vent and overflow line blockage with flush pump running in flush cycle
RCSTS-1FS-STRUCT01	Release of caustic solution to the sump pit from the water flush tank due to tank connection failure.	Structural failure of pipe connections/expansion joint
RCSTS-1FS-STRUCT02	Release of caustic solution to the sump pit from the water flush tank due to structural failure of tank.	Structural failure of water flush tank

Table C-6. Hazardous Conditions With Potential Occupational Safety Consequences (OCC). (2 sheets)

ID	Hazardous Conditions	Cause
RCSTS-1FS-STRUCT03	Release of caustic solution to the sump pit from the water flush tank due to tank corrosion failure.	External water flush tank corrosion
RCSTS-2FS-FLOW06	Release of caustic solution to the atmosphere from the water flush system due to a mistransfer.	Flush line block valve failure, or valve left open due to operator error
RCSTS-3FS-FLOW01	Release of caustic solution to the sump from the water flush system due to rupture of tank fittings.	Raw water line break/rupture, floats flush water tank, damages tank/equipment
RCSTS-3FS-FLOW02	Release of caustic to the sump from the caustic system due to rupture of caustic drum.	Raw water line break/rupture, overfilling of chemical addition equipment sump breaching drum containment
RCSTS-4FS-FLOW01	Release of caustic to the sump from the caustic system due to rupture of drum.	Caustic drum failure due to corrosion
RCSTS-4FS-FLOW02	Release of caustic material to caustic storage area from caustic drum due to handling error.	Materials handling accident
RCSTS-4FS-FLOW07	Release of caustic to the sump from the caustic system due to failure of check valve and overfilling of caustic drum with raw water.	Check valve fails open and bypass valve left open, backflow of raw water into caustic addition line of flush system.

APPENDIX D

CONTROL ALLOCATION TABLES

This page intentionally left blank.

LIST OF TABLES

D-1 Safety SSCs and TSRs For Potential S3 and S2 Consequences D-1-1

D-2 Safety SSCs and TSRs For Potential S1 Consequences with F3 Frequency D-2-1

D-3 Safety SSCs and TSRs for Potentially Severe (E3 and E2) Environmental Consequences D-3-1

D-4 Defense In Depth Controls For Potential S3 and S2 Consequences . . D-4-1

D-5 Defense In Depth For Potential S1 Consequences With F3 Frequency D-5-1

D-6 Defense In Depth Controls For Potentially Severe (E3 and E2) Environmental Consequences D-6-1

This page intentionally left blank.

Table D-1. Safety SSCs and TSRs For Potential S3 and S2 Consequences. (63 sheets)

BIO Acc	ID	Hazardous Conditions	Cause	Prev SSC	Prev TSR	Mit SSC	Mit TSR	Control MEMO
01X	RCSTS-01-FLOW02	Release of radioactive aerosols and entrained solids to the atmosphere from Tank 241-SY-102 due to criticality.	Mistransfer of material containing organic extractant from east area via the supernate piping route	None required	AC: 5.1 Nuclear Criticality Safety: - Establish CPSs - Transfer limits on pH, neutron absorber to plutonium ratio and plutonium concentration - Criticality training program - CSERs for cross-site slurry transfers	None required	None Required	Controls based on Reanalyzed Accident for W058 Project
02X	RCSTS-08-FILTER01*	Release of residual contamination from Diversion Box 6241-A due to failure of inlet HEPA filter.	Tornado or high winds across inlet	None required	None Required	None required	AC: HEPA Filter Cntrls	Controls based on Original BIO Accident Analysis
02X	RCSTS-08-FILTER02*	Release of residual contamination from Diversion Box 6241-A due to failure of inlet HEPA filter.	HEPA filter structural failure or seal failure	None required	None Required	None required	AC: HEPA Filter Cntrls	Controls based on Original BIO Accident Analysis
02X	RCSTS-09-FILTER01*	Release of residual contamination from Vent Station 6241-V due to failure of inlet HEPA filter.	Tornado or high winds across inlet	None required	None Required	None required	AC: HEPA Filter Cntrls	Controls based on Original BIO Accident Analysis
02X	RCSTS-09-FILTER02*	Release of residual contamination from Vent Station 6241-V due to failure of inlet HEPA filter.	HEPA filter structural failure or seal failure	None required	None Required	None required	AC: HEPA Filter Cntrls	Controls based on Original BIO Accident Analysis
03X	RCSTS-03-TEMP01*	Release of radioactive material to the atmosphere from the SY valve pit due to fire in pit.	Fire in the pit caused by maintenance or electrical problem	None required	AC: 5.2 Ignition Controls: AC: 5.3 Flammable Gas Monitoring Controls	None required	AC: 5.5 Emergency Preparedness	Controls based on Original BIO Accident Analysis

Table D-1. Safety SSCs and TSRs For Potential S3 and S2 Consequences. (63 sheets)

BIO Acc	ID	Hazardous Conditions	Cause	Prev SSC	Prev TSR	Mit SSC	Mit TSR	Control MEMO
07X	RCSTS-10/11-INTEG02b*	Release of radioactive supernate to the soil subsurface from the underground piping between the diversion box and the vent station due to piping system leak.	Failure of primary and encasement piping due to corrosion	SC: Transfer Piping SS: Pipe Encasements	None Required	SS: Tank Level Detection Syss SS: Trans Leak Detection Sys	LCO: 3.1.3 Trans Leak Detection Syss AC: 5.12M Trans Cntrls - Material Balance - Monitor Intercon Tanks	Controls based on Reanalyzed Accident for W058 Project
07X	RCSTS-10/11-INTEG05b*	Release of radioactive supernate to the soil subsurface from the underground piping between the diversion box and the vent station due to piping system leak.	Failure of primary and encasement piping due to unrecognized material flaw	SC: Transfer Piping SS: Pipe Encasements	None Required	SS: Tank Level Detection Syss SS: Trans Leak Detection Sys	LCO: 3.1.3 Trans Leak Detection Syss AC: 5.12M Trans Cntrls - Material Balance - Monitor Intercon Tanks	Controls based on Reanalyzed Accident for W058 Project
07X	RCSTS-10/11-PRES01b*	Release of radioactive supernate to the soil subsurface from the underground piping between the diversion box and the vent station due to piping system leak.	Failure of primary and encasement piping due to water hammer	SC: Transfer Piping SS: Pipe Encasements	AC: 5.12M Transfer Controls - Config Management - Indep Route Verification	SS: Tank Level Detection Syss SS: Trans Leak Detection Sys	LCO: 3.1.3 Trans Leak Detection Syss AC: 5.12M Trans Cntrls - Material Balance	Controls based on Reanalyzed Accident for W058 Project
07X	RCSTS-12/13-INTEG02b*	Release of radioactive supernate to the soil subsurface from the underground piping between the vent station and the 244-A Lift Station due to piping system leak.	Failure of primary and encasement piping due to corrosion	SC: Transfer Piping SS: Pipe Encasements	None Required	SS: Tank Level Detection Syss SS: Trans Leak Detection Sys	LCO: 3.1.3 Trans Leak Detection Syss AC: 5.12M Trans Cntrls - Material Balance - Monitor Intercon Tanks	Controls based on Reanalyzed Accident for W058 Project

Table D-1. Safety SSCs and TSRs For Potential S3 and S2 Consequences. (63 sheets)

BIO Acc	ID	Hazardous Conditions	Cause	Prev SSC	Prev TSR	Mit SSC	Mit TSR	Control MEMO
07X	RCSTS-12/13-INTEG05b*	Release of radioactive supernate to the soil subsurface from the underground piping between the vent station and the 244-A Lift Station due to piping system leak.	Failure of primary and encasement piping due to unrecognized material flaw	SC: Transfer Piping SS: Pipe Encasements	None Required	SS: Tank Level Detection Syss SS: Trans Leak Detection Sys	LCO: 3.1.3 Trans Leak Detection Syss AC: 5.12M Trans Cntrls - Material Balance - Monitor Intercon Tanks	Controls based on Reanalyzed Accident for W058 Project
07X	RCSTS-12/13-PRES01b*	Release of radioactive supernate to the soil subsurface from the underground piping between the vent station and the 244-A Lift Station due to piping system leak.	Failure of primary and encasement piping due to steam hammer caused by loss of flushwater flow to steam mixing chamber in east area	SC: Transfer Piping SS: Pipe Encasements	AC: 5.12M Transfer Controls - Config Management - Indep Route Verification	SS: Tank Level Detection Syss SS: Trans Leak Detection Sys	LCO: 3.1.3 Trans Leak Detection Syss AC: 5.12M Trans Cntrls - Material Balance	Controls based on Reanalyzed Accident for W058 Project
09X	RCSTS-2FS-FLOW01	Release of caustic solution spray to the atmosphere from the water flush system due to a transfer line break.	Line break (upstream of flush pump) due to structural failure	None Required	AC: 5.23 Caustic Transfer Cntrls	None required	AC: 5.23 Caustic Transfer Cntrls	Controls based on Original BIO Accident Analysis
09X	RCSTS-2FS-FLOW02	Release of caustic solution spray to the atmosphere from the water flush system due to a transfer line break.	Line break (downstream of flush pump) due to structural failure	None Required	AC: 5.23 Caustic Transfer Cntrls	None required	AC: 5.23 Caustic Transfer Cntrls	Controls based on Original BIO Accident Analysis
09X	RCSTS-2FS-FLOW03	Release of caustic solution spray to the atmosphere from the water flush system due to a transfer line break.	Line plug - before heaters due to debris buildup causing a pressure buildup and failure of line	None Required	AC: 5.23 Caustic Transfer Cntrls	None required	AC: 5.23 Caustic Transfer Cntrls	Controls based on Original BIO Accident Analysis
09X	RCSTS-2FS-FLOW04	Release of caustic solution spray to the atmosphere from the water flush system due to a transfer line break.	Line plug - after heaters due to debris buildup causing pressure buildup at the heater and resulting in heater pipe failure	None Required	AC: 5.23 Caustic Transfer Cntrls	None required	AC: 5.23 Caustic Transfer Cntrls	Controls based on Original BIO Accident Analysis

Table D-1. Safety SSCs and TSRs For Potential S3 and S2 Consequences. (63 sheets)

BIO Acc	ID	Hazardous Conditions	Cause	Prev SSC	Prev TSR	Mit SSC	Mit TSR	Control MEMO
09X	RCSTS-2FS-FLOW05	Release of caustic solution spray to the atmosphere from the water flush system due to a relief valve failure.	Caustic injection pressure relief valve failure	None Required	AC: 5.23 Caustic Transfer Cntrls	None required	AC: 5.23 Caustic Transfer Cntrls	Controls based on Original BIO Accident Analysis
09X	RCSTS-2FS-FLOW07	Release of caustic solution spray to the atmosphere from the water flush system due to a transfer line break.	Flush line break due to structural failure	None Required	AC: 5.23 Caustic Transfer Cntrls	None required	AC: 5.23 Caustic Transfer Cntrls	Controls based on Original BIO Accident Analysis
09X	RCSTS-2FS-PRES01	Release of caustic solution spray to the atmosphere from the water flush system due line plug.	Flush line plug - before heaters due to debris buildup causing a pressure buildup and failure of line	None Required	AC: 5.23 Caustic Transfer Cntrls	None required	AC: 5.23 Caustic Transfer Cntrls	Controls based on Original BIO Accident Analysis
09X	RCSTS-2FS-PRES02	Release of caustic solution spray to the atmosphere from the water flush system due to a line plug.	Flush line plug - after heaters due to debris buildup causing pressure buildup at the heater and resulting in heater pipe failure	None Required	AC: 5.23 Caustic Transfer Cntrls	None required	AC: 5.23 Caustic Transfer Cntrls	Controls based on Original BIO Accident Analysis
09X	RCSTS-2FS-PRES03	Release of caustic solution spray to the atmosphere from the water flush system due to a line break.	Flush line break due to structural failure	None Required	AC: 5.23 Caustic Transfer Cntrls	None required	AC: 5.23 Caustic Transfer Cntrls	Controls based on Original BIO Accident Analysis
09X	RCSTS-2FS-TEMP01	Release of caustic solution spray to the atmosphere from the water flush system due to a line plug.	Flush line plug - before heaters due to debris buildup causing a pressure buildup and failure of line	None Required	AC: 5.23 Caustic Transfer Cntrls	None required	AC: 5.23 Caustic Transfer Cntrls	Controls based on Original BIO Accident Analysis
09X	RCSTS-2FS-TEMP02	Release of caustic solution spray to the atmosphere from the water flush system due to freezing conditions.	Freezing weather with loss of heat trace function	None Required	AC: 5.23 Caustic Transfer Cntrls	None required	AC: 5.23 Caustic Transfer Cntrls	Controls based on Original BIO Accident Analysis

Table D-1. Safety SSCs and TSRs For Potential S3 and S2 Consequences. (63 sheets)

BIO Acc	ID	Hazardous Conditions	Cause	Prev SSC	Prev TSR	Mit SSC	Mit TSR	Control MEMO
09X	RCSTS-4FS-FLOW03	Release of caustic to the atmosphere from the caustic system due to pressure relief valve failing open.	Pressure relief valve fails open	None Required	AC: 5.23 Caustic Transfer Cntrls	None required	AC: 5.23 Caustic Transfer Cntrls	Controls based on Original BIO Accident Analysis
09X	RCSTS-4FS-FLOW04	Release of caustic to the atmosphere from the caustic system due to over pressurization of line and failure of pressure relief valve to open.	Back pressure valve fails in closed position	None Required	AC: 5.23 Caustic Transfer Cntrls	None required	AC: 5.23 Caustic Transfer Cntrls	Controls based on Original BIO Accident Analysis
09X	RCSTS-4FS-FLOW05	Release of caustic to the atmosphere from the caustic system due to line failure in chemical injection package.	Line failure/leak due to structural failure	None Required	AC: 5.23 Caustic Transfer Cntrls	None required	AC: 5.23 Caustic Transfer Cntrls	Controls based on Original BIO Accident Analysis
09X	RCSTS-4FS-FLOW06	Release of caustic to the atmosphere from the caustic system due to a caustic system drain valve leak.	Caustic drain valve leak	None Required	AC: 5.23 Caustic Transfer Cntrls	None required	AC: 5.23 Caustic Transfer Cntrls	Controls based on Original BIO Accident Analysis
09X	RCSTS-4FS-PRES/TEMP01	Release of caustic to the atmosphere from the caustic system due to pressure relief valve failing open.	Pressure relief valve fails open on caustic injection system.	None Required	AC: 5.23 Caustic Transfer Cntrls	None required	AC: 5.23 Caustic Transfer Cntrls	Controls based on Original BIO Accident Analysis
09X	RCSTS-4FS-PRES/TEMP02	Release of caustic to the atmosphere from the caustic system due to pressure relief valve failing in closed position and rupture of line.	Back pressure relief valve fails in closed position.	None Required	AC: 5.23 Caustic Transfer Cntrls	None required	AC: 5.23 Caustic Transfer Cntrls	Controls based on Original BIO Accident Analysis
09X	RCSTS-5FS-FLOW01	Release of caustic to the atmosphere from caustic line due to a line break.	Line break due to structural failure.	None Required	AC: 5.23 Caustic Transfer Cntrls	None required	AC: 5.23 Caustic Transfer Cntrls	Controls based on Original BIO Accident Analysis

Table D-1. Safety SSCs and TSRs For Potential S3 and S2 Consequences. (63 sheets)

BIO Acc	ID	Hazardous Conditions	Cause	Prev SSC	Prev TSR	Mit SSC	Mit TSR	Control MEMO
09X	RCSTS-5FS-FLOW02	Release of caustic to the atmosphere from caustic line due to a line break.	Line plug due to debris buildup causing pressure buildup resulting in pipe failure.	None Required	AC: 5.23 Caustic Transfer Cntrls	None required	AC: 5.23 Caustic Transfer Cntrls	Controls based on Original BIO Accident Analysis
11X	RCSTS-01-FLOW05	Release of ammonia to atmosphere from a fire or a gas release resulting in an explosion due to addition of inadequately diluted caustic.	Human error	None required	None required	None required	None required	Controls based on Original BIO Accident Analysis
12X	RCSTS-01-FLOW04	Release of radioactive aerosols/entrained solids and/or toxic gases to the atmosphere from Tank 241-SY-102 due to chemical reaction.	Mistransfer of incompatible material from east area via the supernate piping route.	None required	AC: 5.12 Transfer Controls: - Compat eval for pH 11	SS: HEPA filters	AC: 5.6 HEPA Filter controls: - Aerosol test upon install - Periodic aerosol test	Controls based on Original BIO Accident Analysis
14X	RCSTS-03-INTEG01	Release of radioactive aerosols to the atmosphere from the SY valve pit due to fire or explosion of flammable gas.	Fire or explosion in the valve pit caused by buildup of flammable gas because of spill of supernate or slurry	None required	AC: Ign Cntrls - Cntrls sparking - Cntrls electrostatic ign sources - Polymer material cntrls - Surface temp for equip contact waste - NFPA 70 Class 1 Div 1 & 2 requirements - Purged and pres equip cntrls AC: 5.11 Flam Gas Mon Cntrls - Manned work act - Unmanned ops	None Required	AC: 5.14 Emerg Prep	Controls based on Original BIO Accident Analysis

Table D-1. Safety SSCs and TSRs For Potential S3 and S2 Consequences. (63 sheets)

BIO Acc	ID	Hazardous Conditions	Cause	Prev SSC	Prev TSR	Mit SSC	Mit TSR	Control MEMO
14X	RCSTS-03-INTEG02	Release of radioactive aerosols to the atmosphere from the SY valve pit due to fire or explosion of flammable gas.	Fire or explosion due to leakage of flammable gas due to pipe breach in slurry line caused by gas release from slurry	None required	AC: Ign Cntrls - Cntrls sparking - Cntrls electrostatic ign sources - Polymer material cntrls - Surface temp for equip contact waste - NFPA 70 Class 1 Div 1 & 2 requirements - Purged and pres equip cntrls AC: 5.11 Flam Gas Mon Cntrls - Manned work act - Unmanned ops	None Required	AC: 5.14 Emerg Prep	Controls based on Original BIO Accident Analysis
14X	RCSTS-08-INTEG03	Release of radioactive slurry to soil surface from overflow of diversion box due to piping system leak.	Flammable gas explosion from release of trapped flammable gas within pipe combined with ignition source	None required	AC: Ign Cntrls - Cntrls sparking - Cntrls electrostatic ign sources - Polymer material cntrls - Surface temp for equip contact waste - NFPA 70 Class 1 Div 1 & 2 requirements - Purged and pres equip cntrls	SS: Trans Leak Detect Sys	LCO: 3.1.3M Trans Leak Detect Syss AC: 5.14 Emerg Prep	Controls based on Original BIO Accident Analysis

Table D-1. Safety SSCs and TSRs For Potential S3 and S2 Consequences. (63 sheets)

BIO Acc	ID	Hazardous Conditions	Cause	Prev SSC	Prev TSR	Mit SSC	Mit TSR	Control MEMO
14X	RCSTS-08-INTEG12	Release of radioactive aerosols to the atmosphere from the 6241-A diversion box due to fire or explosion of flammable gas.	Fire or explosion in the diversion box caused by buildup of flammable gas because of spill of supernate to diversion box sump	None required	AC: Ign Cntrls - Cntrls sparking - Cntrls electrostatic ign sources - Polymer material cntrls - Surface temp for equip contact waste - NFPA 70 Class 1 Div 1 & 2 requirements - Purged and pres equip cntrls AC: 5.11 Flam Gas Mon Cntrls - Manned work act - Unmanned ops	None required	AC: Emerg Prep	Controls based on Original BIO Accident Analysis
14X	RCSTS-09-INTEG05	Release of radioactive slurry to soil surface from overflow of vent station due to piping system leak.	Flammable gas explosion from release of trapped flammable gas within pipe combined with ignition source	None required	AC: Ign Cntrls - Cntrls sparking - Cntrls electrostatic ign sources - Polymer material cntrls - Surface temp for equip contact waste - NFPA 70 Class 1 Div 1 & 2 requirements - Purged and pres equip cntrls AC: 5.11 Flam Gas Mon Cntrls - Manned work act - Unmanned ops	SS: Trans Leak Detect Sys	LCO: 3.1.3M Trans Leak Detect Syss AC: 5.14 Emerg Prep	Controls based on Original BIO Accident Analysis

Table D-1. Safety SSCs and TSRs For Potential S3 and S2 Consequences. (63 sheets)

BIO Acc	ID	Hazardous Conditions	Cause	Prev SSC	Prev TSR	Mit SSC	Mit TSR	Control MEMO
14X	RCSTS-09-INTEG06	Release of radioactive aerosols to the atmosphere from the vent station due to fire or explosion of flammable gas.	Fire or explosion in the vent station caused by buildup of flammable gas because of spill of supernate or slurry to vent station	None required	AC: Ign Cntrls - Cntrls sparking - Cntrls electrostatic ign sources - Polymer material cntrls - Surface temp for equip contact waste - NFPA 70 Class 1 Div 1 & 2 requirements - Purged and pres equip cntrls AC: 5.11 Flam Gas Mon Cntrls - Manned work act - Unmanned ops	None Required	AC: Emerg Prep	Controls based on Original BIO Accident Analysis
14X	RCSTS-09-INTEG14	Release of radioactive aerosols to the atmosphere caused by spray leak of slurry from vent station due to piping system leak.	Flammable gas explosion from release of trapped flammable gas within pipe combined with ignition source	None required	AC: Ign Cntrls - Cntrls sparking - Cntrls electrostatic ign sources - Polymer material cntrls - Surface temp for equip contact waste - NFPA 70 Class 1 Div 1 & 2 requirements - Purged and pres equip cntrls AC: 5.11 Flam Gas Mon Cntrls - Manned work act - Unmanned ops	None Required	AC: Emerg Prep	Controls based on Original BIO Accident Analysis

Table D-1. Safety SSCs and TSRs For Potential S3 and S2 Consequences. (63 sheets)

BIO Acc	ID	Hazardous Conditions	Cause	Prev SSC	Prev TSR	Mit SSC	Mit TSR	Control MEMO
14X	RCSTS-18/19-INTEG05	Release of radioactive slurry to the soil from the underground piping between the diversion box and the vent station due to piping system leak.	Failure of primary and encasement piping due to flammable gas explosion in primary piping	None required	AC: Ign Cntrls - Cntrls sparking - Cntrls electrostatic ign sources - Polymer material cntrls - Surface temp for equip contact waste - NFPA 70 Class 1 Div 1 & 2 requirements - Purged and pres equip cntrls AC: 5.11 Flam Gas Mon Cntrls - Manned work act - Unmanned ops	SS: Trans Leak Detect Sys	LCO: 3.1.3M Trans Leak Detect Syss AC: 5.14 Emerg Prep	Controls based on Original BIO Accident Analysis
14X	RCSTS-24-INTEG03	Release of radioactive aerosols to the atmosphere from the lift station due to fire or explosion of flammable gas.	Fire or explosion in the lift station caused by buildup of flammable gas because of spill of supernate or slurry	None required	AC: Ign Cntrls - Cntrls sparking - Cntrls electrostatic ign sources - Polymer material cntrls - Surface temp for equip contact waste - NFPA 70 Class 1 Div 1 & 2 requirements - Purged and pres equip cntrls AC: 5.11 Flam Gas Mon Cntrls - Manned work act - Unmanned ops	None Required	AC: Emerg Prep	Controls based on Original BIO Accident Analysis

Table D-1. Safety SSCs and TSRs For Potential S3 and S2 Consequences. (63 sheets)

BIO Acc	ID	Hazardous Conditions	Cause	Prev SSC	Prev TSR	Mit SSC	Mit TSR	Control MEMO
14X	RCSTS-24-INTEG06	Release of radioactive aerosols to the atmosphere from the lift station due to fire or explosion of flammable gas.	Fire or explosion due to leakage of flammable gas due to pipe breach in slurry line caused by gas release from slurry	None required	AC: Ign Cntrls - Cntrls sparking - Cntrls electrostatic ign sources - Polymer material cntrls - Surface temp for equip contact waste - NFPA 70 Class 1 Div 1 & 2 requirements - Purged and pres equip cntrls AC: 5.11 Flam Gas Mon Cntrls - Manned work act - Unmanned ops	None Required	AC: Emerg Prep	Controls based on Original BIO Accident Analysis
18X	RCSTS-01-FLOW03	Release of radioactive supernate to the soil surface from overflow of Tank 241-SY-102 due to mistransfer.	Mistransfer of material from east area via the supernate piping route.	SC: Trans Leak Detect Syss	AC: 5.12M Trans Cntrls: - Double valve isolation on intercon lines - Config Management - Route Verification - Caps/blanks on open nozzles AC: 5.20 Trans Pump admin lock cntrls LCO: 3.1.3M Trans Leak Detect Syss	SS: Tank Level Detect Syss SC: Trans Leak Detect Syss	AC: 5.12M Trans Cntrls: - Material Balance AC: 5.13 Encasement Seal Loop Cntrls AC: 5.14 Emerg Prep LCO: 3.1.3M Trans Leak Detect Syss	Controls based on Reanalyzed Accident for W058 Project

Table D-1. Safety SSCs and TSRs For Potential S3 and S2 Consequences. (63 sheets)

BIO Acc	ID	Hazardous Conditions	Cause	Prev SSC	Prev TSR	Mit SSC	Mit TSR	Control MEMO
18X	RCSTS-03-FLOW/INTEG 01	Release of radioactive slurry to the soil surface from overflow in the SY-A or SY-B valve pit due to piping system leak (pool).	Failure of jumper due to misalignment (human error).	SC: Trans Leak Detect Syss	AC: 5.12M Trans Cntrls: - Jumper Leak Testing LCO: 3.1.3M Trans Leak Detect Syss	SS: Trans Sys Covers SS: Tank Level Detect Syss SC: Trans Leak Detect Sys	LCO: 3.1.1M Trans Sys Cover AC: 5.12M Trans Cntrls: - Material Balance - Pit floor drains open AC: 5.14 Emerg Prep AC: 5.22M Trans Sys cover removal LCO: 3.1.3M Trans Leak Detect Syss	Controls based on Reanalyzed Accident for W058 Project
18X	RCSTS-03-FLOW/INTEG 02a	Release of radioactive supernate to the soil surface from overflow in the SY-A or SY-B valve pit due to piping system leak (pool).	Failure of jumper due to misalignment (human error)	SC: Trans Leak Detect Syss	AC: 5.12M Trans Cntrls: - Jumper Leak Testing LCO: 3.1.3M Trans Leak Detect Syss	SS: Trans Sys Covers SS: Tank Level Detect Syss SC: Trans Leak Detect Sys	LCO: 3.1.1M Trans Sys Cover AC: 5.12M Trans Cntrls: - Material Balance - Pit floor drains open AC: 5.14 Emerg Prep AC: 5.22M Trans Sys cover removal LCO: 3.1.3M Trans Leak Detect Syss	Controls based on Reanalyzed Accident for W058 Project

Table D-1. Safety SSCs and TSRs For Potential S3 and S2 Consequences. (63 sheets)

BIO Acc	ID	Hazardous Conditions	Cause	Prev SSC	Prev TSR	Mit SSC	Mit TSR	Control MEMO
18X	RCSTS-03-FLOW/INTEG 02b	Release of radioactive supernate to the soil surface from overflow in the SY-A or SY-B valve pit due to piping system leak (pool).	Failure of jumper due to gasket failure	SC: Trans Leak Detect Syss	AC: 5.12M Trans Cntrls: - Jumper Leak Testing LCO: 3.1.3M Trans Leak Detect Syss	SS: Tank Level Detect Syss SS: Trans Sys Covers SC: Trans Leak Detect Syss	LCO: 3.1.1M Trans Sys Cover AC: 5.12M Trans Cntrls: - Material Balance - Pit floor drains open AC: 5.22M Trans Sys cover removal LCO: 3.1.3M Trans Leak Detect Syss AC: 5.14 Emerg Prep	Controls based on Reanalyzed Accident for W058 Project
18X	RCSTS-03-FLOW/INTEG 02c	Release of radioactive supernate to the soil surface from overflow in the SY-A or SY-B valve pit due to piping system leak (pool).	Failure of jumper due to corrosion	SC: Trans Leak Detect Syss	AC: 5.12M Trans Cntrls: - Jumper Leak Testing LCO: 3.1.3M Trans Leak Detect Syss	SS: Tank Level Detect Syss SS: Trans Sys Covers SC: Trans Leak Detect Syss	LCO: 3.1.1M Trans Sys Cover AC: 5.12M Trans Cntrls: - Material Balance - Pit floor drains open AC: 5.22M Trans Sys cover removal LCO: 3.1.3M Trans Leak Detect Syss AC: 5.14 Emerg Prep	Controls based on Reanalyzed Accident for W058 Project

Table D-1. Safety SSCs and TSRs For Potential S3 and S2 Consequences. (63 sheets)

BIO Acc	ID	Hazardous Conditions	Cause	Prev SSC	Prev TSR	Mit SSC	Mit TSR	Control MEMO
18X	RCSTS-03-FLOW02	Release of radioactive slurry to the soil surface from overflow in the SY-A or SY-B valve pit due to piping system leak (pool).	Computer failure or human error causing misrouting of material when flow path is not completely connected	SC: Trans Leak Detect Syss	AC: 5.12M Trans Cntrls: - Double valve isolation on intercon lines - Config Management - Route Verification - Caps/blanks on open nozzles AC: 5.20 Trans Pump admin lock cntrls LCO: 3.1.3M Trans Leak Detect Syss	SS: Trans Sys Covers SS: Tank Level Detect Syss SC: Trans Leak Detect Syss	LCO: 3.1.1M Trans Sys Cover AC: 5.12M Trans Cntrls: - Material Balance - Pit floor drains open AC: 5.13 Encasement Seal Loop Cntrls AC: 5.14 Emerg Prep AC: 5.22M Trans Sys cover removal LCO: 3.1.3M Trans Leak Detect Syss	Controls based on Reanalyzed Accident for W058 Project
18X	RCSTS-03-FLOW03	Release of radioactive slurry to the soil surface from overflow in the SY-A or SY-B valve pit due to piping system leak (pool).	External leak of valve or valves to the valve pit	SC: Trans Leak Detect Syss	LCO: 3.1.3M Trans Leak Detect Syss	SS: Tank Level Detect Syss SS: Trans Sys Covers SC: Trans Leak Detect Syss	LCO: 3.1.1M Trans Sys Cover AC: 5.12M Trans Cntrls: - Material Balance - Pit floor drains open AC: 5.14 Emerg Prep AC: 5.22M Trans Sys cover removal LCO: 3.1.3M Trans Leak Detect Syss	Controls based on Reanalyzed Accident for W058 Project

Table D-1. Safety SSCs and TSRs For Potential S3 and S2 Consequences. (63 sheets)

BIO Acc	ID	Hazardous Conditions	Cause	Prev SSC	Prev TSR	Mit SSC	Mit TSR	Control MEMO
18X	RCSTS-03-FLOW04	Release of radioactive supernate to the soil surface from overflow in the SY-A or SY-B valve pit due to piping system leak (pool).	Computer failure or human error causing misrouting of material when flow path is not completely connected	SC: Trans Leak Detect Syss	AC: 5.12M Trans Cntrls: - Double valve isolation on intercon lines - Config Management - Route Verification - Caps/blanks on open nozzles AC: 5.20 Trans Pump admin lock cntrls LCO: 3.1.3M Trans Leak Detect Syss	SS: Trans Sys Covers SS: Tank Level Detect Syss SC: Trans Leak Detect Syss	LCO: 3.1.1M Trans Sys Cover AC: 5.12M Trans Cntrls: - Material Balance - Pit floor drains open AC: 5.13 Encasement Seal Loop Cntrls AC: 5.14 Emerg Prep AC: 5.22M Trans Sys cover removal LCO: 3.1.3M Trans Leak Detect Syss	Controls based on Reanalyzed Accident for W058 Project
18X	RCSTS-03-FLOW05	Release of radioactive supernate to the soil surface from overflow in the SY-A or SY-B valve pit due to piping system leak (pool).	External leak of valve or valves to the valve pit	SC: Trans Leak Detect Syss	LCO: 3.1.3M Trans Leak Detect Syss	SS: Tank Level Detect Syss SS: Trans Sys Covers SC: Trans Leak Detect Syss	LCO: 3.1.1M Trans Sys Cover AC: 5.12M Trans Cntrls: - Material Balance - Pit floor drains open AC: 5.14 Emerg Prep AC: 5.22M Trans Sys cover removal LCO: 3.1.3M Trans Leak Detect Syss	Controls based on Reanalyzed Accident for W058 Project
18X	RCSTS-03-INTEG05	Release of radioactive slurry to the soil surface from overflow in the SY-A or SY-B valve pit due to piping system leak.	External event (airplane crash, etc)	None Required	None Required	None Required	AC: 5.14 Emerg Prep	No controls required based on the TWRS BIO

Table D-1. Safety SSCs and TSRs For Potential S3 and S2 Consequences. (63 sheets)

BIO Acc	ID	Hazardous Conditions	Cause	Prev SSC	Prev TSR	Mit SSC	Mit TSR	Control MEMO
18X	RCSTS-03-INTEG07	Release of radioactive supernate to the soil surface from overflow in the SY-A or SY-B valve pit due to piping system leak.	External event (airplane crash, etc)	None Required	None Required	None Required	AC: 5.14 Emerg Prep	No controls required based on the TWRS BIO
18X	RCSTS-03-PRES02	Release of radioactive slurry to the soil surface from overflow in the SY-A or SY-B valve pit due to piping system leak (pool).	Water hammer	SC: Trans Leak Detect Syss	AC: 5.12M Trans Cntrls: - Config Management - Route Verification LCO: 3.1.3M Trans Leak Detect Syss	SS: Tank Level Detect Syss SS: Trans Sys Covers SC: Trans Leak Detect Syss	LCO: 3.1.1M Trans Sys Cover AC: 5.12M Trans Cntrls: - Material Balance - Pit floor drains open AC: 5.22M Trans Sys cover removal LCO: 3.1.3M Trans Leak Detect Syss AC: 5.14 Emerg Prep	Controls based on Reanalyzed Accident for W058 Project
18X	RCSTS-03-PRES03	Release of radioactive supernate to the soil surface from overflow in the SY-A or SY-B valve pit due to piping system leak (pool).	Water hammer	SC: Trans Leak Detect Syss	AC: 5.12M Trans Cntrls: - Config Management - Route Verification LCO: 3.1.3M Trans Leak Detect Syss	SS: Tank Level Detect Syss SS: Trans Sys Covers SC: Trans Leak Detect Syss	LCO: 3.1.1M Trans Sys Cover AC: 5.12M Trans Cntrls: - Material Balance - Pit floor drains open AC: 5.22M Trans Sys cover removal LCO: 3.1.3M Trans Leak Detect Syss AC: 5.14 Emerg Prep	Controls based on Reanalyzed Accident for W058 Project

Table D-1. Safety SSCs and TSRs For Potential S3 and S2 Consequences. (63 sheets)

BIO Acc	ID	Hazardous Conditions	Cause	Prev SSC	Prev TSR	Mit SSC	Mit TSR	Control MEMO
18X	RCSTS-08-FLOW03	Release of radioactive supernate to soil surface from overflow of diversion box due to piping system leak.	External leak of valve or valves to the diversion box	SC: Trans Leak Detect Sys	LCO: 3.1.3M Trans Leak Detect Syss	SC: Entry Doors SC: Diversion Box Struct SS: Tank Level Detect Syss SC: Trans Leak Detect Syss	LCO: 3.1.1M Trans Sys Cover/Entry Doors AC: 5.12M Trans Contrls: - Material Balance AC: 5.14 Emerg Prep AC: 5.22M Trans Sys cover removal/entry door closure cntrls LCO: 3.1.3M Trans Leak Detect Syss	Controls based on Reanalyzed Accident for W058 Project
18X	RCSTS-08-FLOW04	Release of radioactive slurry to soil surface from overflow of diversion box due to piping system leak.	External leak of valve or valves to the diversion box	SC: Trans Leak Detect Sys	LCO: 3.1.3M Trans Leak Detect Syss	SC: Entry Doors SC: Diversion Box Struct SS: Tank Level Detect Syss SC: Trans Leak Detect Syss	LCO: 3.1.1M Trans Sys Cover/Entry Doors AC: 5.12M Trans Contrls: - Material Balance AC: 5.14 Emerg Prep AC: 5.22M Trans Sys cover removal/entry door closure cntrls LCO: 3.1.3M Trans Leak Detect Syss	Controls based on Reanalyzed Accident for W058 Project

Table D-1. Safety SSCs and TSRs For Potential S3 and S2 Consequences. (63 sheets)

BIO Acc	ID	Hazardous Conditions	Cause	Prev SSC	Prev TSR	Mit SSC	Mit TSR	Control MEMO
18X	RCSTS-08-FLOW05	Release of radioactive supernate to soil surface from overflow of diversion box due to piping system leak.	Backflow of supernate to sump pump line, through sump pump and onto diversion box floor	SS: Trans Leak Detect Sys	AC: 5.12M Trans Cntrls: - Config Management - Route Verification LCO: 3.1.3M Trans Leak Detect Syss	SC: Entry Doors SC: Diversion Box Struct SS: Tank Level Detect Syss SC: Trans Leak Detect Syss	LCO: 3.1.1M Trans Sys Cover/Entry Doors LCO: 3.1M Inlet Air HEPA Filter AC: 5.12M Trans Cntrls: - Material Balance AC: 5.14 Emerg Prep AC: 5.22M Trans Sys cover removal/entry door closure cntrls LCO: 3.1.3M Trans Leak Detect Syss	Controls based on Reanalyzed Accident for W058 Project
18X	RCSTS-08-INTEG01	Release of radioactive slurry to soil surface from overflow of diversion box due to piping system leak.	Failure of piping due to corrosion	SC: Trans Piping SC: Trans Leak Detect Sys	LCO: 3.1.3M Trans Leak Detect Syss	SC: Entry Doors SC: Diversion Box Struct SS: Tank Level Detect Syss SC: Trans Leak Detect Syss	LCO: 3.1.1M Trans Sys Cover/Entry Doors AC: 5.12M Trans Cntrls: - Material Balance AC: 5.14 Emerg Prep AC: 5.22M Trans Sys cover removal/entry door closure cntrls LCO: 3.1.3M Trans Leak Detect Syss	Controls based on Reanalyzed Accident for W058 Project
18X	RCSTS-08-INTEG02	Release of radioactive slurry to soil surface from overflow of diversion box due to piping system leak.	External event (airplane crash, etc)	None Required	None Required	None Required	AC: 5.14 Emerg Prep	No controls required based on the TWRS BIO

Table D-1. Safety SSCs and TSRs For Potential S3 and S2 Consequences. (63 sheets)

BIO Acc	ID	Hazardous Conditions	Cause	Prev SSC	Prev TSR	Mit SSC	Mit TSR	Control MEMO
18X	RCSTS-08-INTEG04	Release of radioactive slurry to soil surface from overflow of diversion box due to piping system leak.	Failure of piping due to material defect	SC: Trans Piping SC: Trans Leak Detect Sys	LCO: 3.1.3M Trans Leak Detect Syss	SC: Entry Doors SC: Diversion Box and Vent Station Struct SS: Tank Level Detect Syss SC: Trans Leak Detect Syss	LCO: 3.1.1M Trans Sys Cover/Entry Doors AC: 5.12M Trans Contrls: - Material Balance AC: 5.14 Emerg Prep AC: 5.22M Trans Sys cover removal/entry door closure cntrls LCO: 3.1.3M Trans Leak Detect Syss	Controls based on Reanalyzed Accident for W058 Project
18X	RCSTS-08-INTEG05	Release of radioactive slurry to soil surface from overflow of diversion box due to piping system leak.	Slurry pump overspeed causing catastrophic failure of pump with missiles damaging pipe	SC: Trans Leak Detect Sys	LCO: 3.1.3M Trans Leak Detect Syss AC: 5.20 Trans Pump Admin Lock Cntrls	SC: Entry Doors SC: Diversion Box Struct SS: Tank Level Detect Syss SC: Trans Leak Detect Syss	LCO: 3.1.1M Trans Sys Cover/Entry Doors AC: 5.12M Trans Contrls: - Material Balance AC: 5.14 Emerg Prep AC: 5.22M Trans Sys cover removal/entry door closure cntrls LCO: 3.1.3M Trans Leak Detect Syss	Controls based on Reanalyzed Accident for W058 Project

Table D-1. Safety SSCs and TSRs For Potential S3 and S2 Consequences. (63 sheets)

BIO Acc	ID	Hazardous Conditions	Cause	Prev SSC	Prev TSR	Mit SSC	Mit TSR	Control MEMO
18X	RCSTS-08-INTEG17a	Release of radioactive supernate to the soil surface from overflow of diversion box due to piping system leak.	Failure of piping due to corrosion plus mitigative features failure	SC: Trans Piping SC: Trans Leak Detect Sys	LCO: 3.1.3M Trans Leak Detect Syss	SC: Entry Doors SC: Diversion Box Struct SS: Tank Level Detect Syss SC: Trans Leak Detect Syss	LCO: 3.1.1M Trans Sys Cover/Entry Doors AC: 5.12M Trans Contrls: - Material Balance AC: 5.14 Emerg Prep AC: 5.22M Trans Sys cover removal/entry door closure cntrls LCO: 3.1.3M Trans Leak Detect Syss	Controls based on Reanalyzed Accident for W058 Project
18X	RCSTS-08-INTEG17b	Release of radioactive supernate to the soil surface from overflow of diversion box due to piping system leak.	Failure of piping due to unrecognized material flaw	SC: Trans Piping SC: Trans Leak Detect Sys	LCO: 3.1.3M Trans Leak Detect Syss	SC: Entry Doors SC: Diversion Box Struct SS: Tank Level Detect Syss SC: Trans Leak Detect Syss	LCO: 3.1.1M Trans Sys Cover/Entry Doors AC: 5.12M Trans Contrls: - Material Balance AC: 5.14 Emerg Prep AC: 5.22M Trans Sys cover removal/entry door closure cntrls LCO: 3.1.3M Trans Leak Detect Syss	Controls based on Reanalyzed Accident for W058 Project
18X	RCSTS-08-INTEG18	Release of radioactive supernate to the soil surface from overflow of diversion box due to piping system leak.	Failure of piping due to external event (airplane crash, volcanism, etc)	None Required	None Required	None Required	AC: 5.14 Emerg Prep	No controls required based on the TWRS BIO

Table D-1. Safety SSCs and TSRs For Potential S3 and S2 Consequences. (63 sheets)

BIO Acc	ID	Hazardous Conditions	Cause	Prev SSC	Prev TSR	Mit SSC	Mit TSR	Control MEMO
18X	RCSTS-08-PRES02	Release of radioactive slurry to soil surface from overflow of diversion box due to piping system leak.	Water hammer	SC: Trans Leak Detect Sys	LCO: 3.1.3M Trans Leak Detect Syss AC: 5.12M Trans Cntrls - Config Management - Route Verification	SC: Entry Doors SC: Diversion Box Struct SS: Tank Level Detect Syss SC: Trans Leak Detect Syss	LCO: 3.1.1M Trans Sys Cover/Entry Doors AC: 5.12M Trans Contrls: - Material Balance AC: 5.14 Emerg Prep AC: 5.22M Trans Sys cover removal/entry door closure cntrls LCO: 3.1.3M Trans Leak Detect Syss	Controls based on Reanalyzed Accident for W058 Project
18X	RCSTS-08-PRES03	Release of radioactive supernate to soil surface from overflow of diversion box due to piping system leak.	Water hammer	SC: Trans Leak Detect Sys	LCO: 3.1.3M Trans Leak Detect Syss AC: 5.12M Trans Cntrls - Config Management - Route Verification	SC: Entry Doors SC: Diversion Box and Vent Station Struct SS: Tank Level Detect Syss SC: Trans Leak Detect Syss	LCO: 3.1.1M Trans Sys Cover/Entry Doors AC: 5.12M Trans Contrls: - Material Balance AC: 5.14 Emerg Prep AC: 5.22M Trans Sys cover removal/entry door closure cntrls LCO: 3.1.3M Trans Leak Detect Syss	Controls based on Reanalyzed Accident for W058 Project

Table D-1. Safety SSCs and TSRs For Potential S3 and S2 Consequences. (63 sheets)

BIO Acc	ID	Hazardous Conditions	Cause	Prev SSC	Prev TSR	Mit SSC	Mit TSR	Control MEMO
18X	RCSTS-08-TEMP01	Release of radioactive slurry to soil surface from overflow of diversion box due to piping system leak.	Freezing of piping within the diversion box due to cold temperatures caused by running the exhauster	SC: Trans Leak Detect Sys	LCO: 3.1.3M Trans Leak Detect Syss	SC: Entry Doors SC: Diversion Box Struct SS: Tank Level Detect Syss SC: Trans Leak Detect Syss	LCO: 3.1.1M Trans Sys Cover/Entry Doors AC: 5.12M Trans Contrls: - Material Balance AC: 5.14 Emerg Prep AC: 5.22M Trans Sys cover removal/entry door closure cntrls LCO: 3.1.3M Trans Leak Detect Syss	Controls based on Reanalyzed Accident for W058 Project
18X	RCSTS-08-TEMP04	Release of radioactive supernate to the soil surface from overflow of diversion box due to piping system leak.	Failure of piping due to freezing	SC: Trans Leak Detect Sys	LCO: 3.1.3M Trans Leak Detect Syss	SC: Entry Doors SC: Diversion Box Struct SS: Tank Level Detect Syss SC: Trans Leak Detect Syss	LCO: 3.1.1M Trans Sys Cover/Entry Doors AC: 5.12M Trans Contrls: - Material Balance AC: 5.14 Emerg Prep AC: 5.22M Trans Sys cover removal/entry door closure cntrls LCO: 3.1.3M Trans Leak Detect Syss	Controls based on Reanalyzed Accident for W058 Project

Table D-1. Safety SSCs and TSRs For Potential S3 and S2 Consequences. (63 sheets)

BIO Acc	ID	Hazardous Conditions	Cause	Prev SSC	Prev TSR	Mit SSC	Mit TSR	Control MEMO
18X	RCSTS-09-FLOW01	Release of radioactive slurry to soil surface from overflow of vent station due to piping system leak.	Flow of slurry to vent station due to incomplete closing of vent valves after venting	SC: Trans Leak Detect Sys	LCO: 3.1.3M Trans Leak Detect Syss	SC: Entry Doors SC: Vent Station Struct SS: Tank Level Detect Syss SC: Trans Leak Detect Syss	LCO: 3.1.1M Trans Sys Cover/Entry Doors AC: 5.12M Trans Contrls: - Material Balance AC: 5.14 Emerg Prep AC: 5.22M Trans Sys cover removal/entry door closure cntrls LCO: 3.1.3M Trans Leak Detect Syss	Controls based on Reanalyzed Accident for W058 Project
18X	RCSTS-09-FLOW04	Release of radioactive slurry to soil surface from overflow of vent station due to piping system leak.	External leak of valve or valves to the vent station	SC: Trans Leak Detect Sys	LCO: 3.1.3M Trans Leak Detect Syss	SC: Entry Doors SC: Vent Station Struct SS: Tank Level Detect Syss SC: Trans Leak Detect Syss	LCO: 3.1.1M Trans Sys Cover/Entry Doors AC: 5.12M Trans Contrls: - Material Balance AC: 5.14 Emerg Prep AC: 5.22M Trans Sys cover removal/entry door closure cntrls LCO: 3.1.3M Trans Leak Detect Syss	Controls based on Reanalyzed Accident for W058 Project

Table D-1. Safety SSCs and TSRs For Potential S3 and S2 Consequences. (63 sheets)

BIO Acc	ID	Hazardous Conditions	Cause	Prev SSC	Prev TSR	Mit SSC	Mit TSR	Control MEMO
18X	RCSTS-09-FLOW05	Release of radioactive supernate to soil surface from overflow of vent station due to piping system leak.	External leak of valve or valves to the vent station	SC: Trans Leak Detect Sys	LCO: 3.1.3M Trans Leak Detect Syss	SC: Entry Doors SC: Vent Station Struct SS: Tank Level Detect Syss SC: Trans Leak Detect Syss	LCO: 3.1.1M Trans Sys Cover/Entry Doors AC: 5.12M Trans Contrls: - Material Balance AC: 5.14 Emerg Prep AC: 5.22M Trans Sys cover removal/entry door closure cntrls LCO: 3.1.3M Trans Leak Detect Syss	Controls based on Reanalyzed Accident for W058 Project
18X	RCSTS-09-FLOW06	Release of radioactive supernate to soil surface from overflow of vent station due to piping system leak.	Flow of supernate to vent station due to incomplete closing of vent valves after venting	SC: Trans Leak Detect Sys	LCO: 3.1.3M Trans Leak Detect Syss	SC: Entry Doors SC: Vent Station Struct SS: Tank Level Detect Syss SC: Trans Leak Detect Syss	LCO: 3.1.1M Trans Sys Cover/Entry Doors AC: 5.12M Trans Contrls: - Material Balance AC: 5.14 Emerg Prep AC: 5.22M Trans Sys cover removal/entry door closure cntrls LCO: 3.1.3M Trans Leak Detect Syss	Controls based on Reanalyzed Accident for W058 Project

Table D-1. Safety SSCs and TSRs For Potential S3 and S2 Consequences. (63 sheets)

BIO Acc	ID	Hazardous Conditions	Cause	Prev SSC	Prev TSR	Mit SSC	Mit TSR	Control MEMO
18X	RCSTS-09-FLOW07	Release of radioactive supernate to soil surface from overflow of vent station due to piping system leak.	Backflow of supernate to sump pump line, through sump pump and onto vent station floor	SS: Trans Leak Detect Sys	AC: 5.12M Trans Cntrls: - Config Management - Route Verification LCO: 3.1.3M Trans Leak Detect Syss	SC: Entry Doors SC: Vent Station Struct SS: Tank Level Detect Syss SC: Trans Leak Detect Syss	LCO: 3.1.1M Trans Sys Cover/Entry Doors LCO: 3.1M Inlet Air HEPA Filter AC: 5.12M Trans Cntrls: - Material Balance AC: 5.14 Emerg Prep AC: 5.22M Trans Sys cover removal/entry door closure cntrls LCO: 3.1.3M Trans Leak Detect Syss	Controls based on Reanalyzed Accident for W058 Project
18X	RCSTS-09-FLOW11	Release of radioactive supernate to soil surface from overflow of vent station due to piping system leak.	Backflow of supernate to sump pump line, through sump pump and onto vent station floor	SS: Trans Leak Detect Sys	AC: 5.12M Trans Cntrls: - Config Management - Route Verification LCO: 3.1.3M Trans Leak Detect Syss	SC: Entry Doors SC: Vent Station Struct SS: Tank Level Detect Syss SC: Trans Leak Detect Syss	LCO: 3.1.1M Trans Sys Cover/Entry Doors LCO: 3.1M Inlet Air HEPA Filter AC: 5.12M Trans Cntrls: - Material Balance AC: 5.14 Emerg Prep AC: 5.22M Trans Sys cover removal/entry door closure cntrls LCO: 3.1.3M Trans Leak Detect Syss	Controls based on Reanalyzed Accident for W058 Project

Table D-1. Safety SSCs and TSRs For Potential S3 and S2 Consequences. (63 sheets)

BIO Acc	ID	Hazardous Conditions	Cause	Prev SSC	Prev TSR	Mit SSC	Mit TSR	Control MEMO
18X	RCSTS-09-INTEG01	Release of radioactive slurry to soil surface from overflow of vent station due to piping system leak.	Failure of piping due to corrosion	SC: Trans Piping SC: Trans Leak Detect Sys	LCO: 3.1.3M Trans Leak Detect Syss	SC: Entry Doors SC: Vent Station Struct SS: Tank Level Detect Syss SC: Trans Leak Detect Syss	LCO: 3.1.1M Trans Sys Cover/Entry Doors AC: 5.12M Trans Contrls: - Material Balance AC: 5.14 Emerg Prep AC: 5.22M Trans Sys cover removal/entry door closure cntrls LCO: 3.1.3M Trans Leak Detect Syss	Controls based on Reanalyzed Accident for W058 Project
18X	RCSTS-09-INTEG02	Release of radioactive supernate to soil surface from overflow of vent station due to piping system leak.	Failure of piping due to corrosion	SC: Trans Piping SC: Trans Leak Detect Sys	LCO: 3.1.3M Trans Leak Detect Syss	SC: Entry Doors SC: Vent Station Struct SS: Tank Level Detect Syss SC: Trans Leak Detect Syss	LCO: 3.1.1M Trans Sys Cover/Entry Doors AC: 5.12M Trans Contrls: - Material Balance AC: 5.14 Emerg Prep AC: 5.22M Trans Sys cover removal/entry door closure cntrls LCO: 3.1.3M Trans Leak Detect Syss	Controls based on Reanalyzed Accident for W058 Project
18X	RCSTS-09-INTEG03	Release of radioactive slurry to soil surface from overflow of vent station due to piping system leak.	External event (airplane crash, etc)	None Required	None Required	None Required	AC: 5.14 Emerg Prep	No controls required based on the TWRS BIO

Table D-1. Safety SSCs and TSRs For Potential S3 and S2 Consequences. (63 sheets)

BIO Acc	ID	Hazardous Conditions	Cause	Prev SSC	Prev TSR	Mit SSC	Mit TSR	Control MEMO
18X	RCSTS-09-INTEG04	Release of radioactive supernate to soil surface from overflow of vent station due to piping system leak.	External event (airplane crash, etc)	None Required	None Required	None Required	AC: 5.14 Emerg Prep	No controls required based on the TWRS BIO
18X	RCSTS-09-INTEG07	Release of radioactive slurry to soil surface from overflow of vent station due to piping system leak.	Failure of piping due to material defect	SC: Trans Piping SC: Trans Leak Detect Sys	LCO: 3.1.3M Trans Leak Detect Syss	SC: Entry Doors SC: Diversion Box and Vent Station Struct SS: Tank Level Detect Syss SC: Trans Leak Detect Syss	LCO: 3.1.1M Trans Sys Cover/Entry Doors AC: 5.12M Trans Contrls: - Material Balance AC: 5.14 Emerg Prep AC: 5.22M Trans Sys cover removal/entry door closure cntrls LCO: 3.1.3M Trans Leak Detect Syss	Controls based on Reanalyzed Accident for W058 Project
18X	RCSTS-09-INTEG08	Release of radioactive supernate to soil surface from overflow of vent station due to piping system leak.	Failure of piping due to material defect	SC: Trans Piping SC: Trans Leak Detect Sys	LCO: 3.1.3M Trans Leak Detect Syss	SC: Entry Doors SC: Vent Station Struct SS: Tank Level Detect Syss SC: Trans Leak Detect Syss	LCO: 3.1.1M Trans Sys Cover/Entry Doors AC: 5.12M Trans Contrls: - Material Balance AC: 5.14 Emerg Prep AC: 5.22M Trans Sys cover removal/entry door closure cntrls LCO: 3.1.3M Trans Leak Detect Syss	Controls based on Reanalyzed Accident for W058 Project

Table D-1. Safety SSCs and TSRs For Potential S3 and S2 Consequences. (63 sheets)

BIO Acc	ID	Hazardous Conditions	Cause	Prev SSC	Prev TSR	Mit SSC	Mit TSR	Control MEMO
18X	RCSTS-09-PRES01	Release of radioactive slurry to soil surface from overflow of vent station due to piping system leak.	Water hammer	SC: Trans Leak Detect Sys	LCO: 3.1.3M Trans Leak Detect Syss AC: 5.12M Trans Cntrls - Config Management - Route Verification	SC: Entry Doors SC: Vent Station Struct SS: Tank Level Detect Syss SC: Trans Leak Detect Syss	LCO: 3.1.1M Trans Sys Cover/Entry Doors AC: 5.12M Trans Cntrls: - Material Balance AC: 5.14 Emerg Prep AC: 5.22M Trans Sys cover removal/entry door closure cntrls LCO: 3.1.3M Trans Leak Detect Syss	Controls based on Reanalyzed Accident for W058 Project
18X	RCSTS-09-PRES02	Release of radioactive supernate to soil surface from overflow of vent station due to piping system leak.	Water hammer	SC: Trans Leak Detect Sys	LCO: 3.1.3M Trans Leak Detect Syss AC: 5.12M Trans Cntrls - Config Management - Route Verification	SC: Entry Doors SC: Vent Station Struct SS: Tank Level Detect Syss SC: Trans Leak Detect Syss	LCO: 3.1.1M Trans Sys Cover/Entry Doors AC: 5.12M Trans Cntrls: - Material Balance AC: 5.14 Emerg Prep AC: 5.22M Trans Sys cover removal/entry door closure cntrls LCO: 3.1.3M Trans Leak Detect Syss	Controls based on Reanalyzed Accident for W058 Project

Table D-1. Safety SSCs and TSRs For Potential S3 and S2 Consequences. (63 sheets)

BIO Acc	ID	Hazardous Conditions	Cause	Prev SSC	Prev TSR	Mit SSC	Mit TSR	Control MEMO
18X	RCSTS-09-TEMP01	Release of radioactive slurry to soil surface from overflow of vent station due to piping system leak.	Freezing of piping within the vent station due to cold temperatures caused by running the exhauster	SC: Trans Leak Detect Sys	LCO: 3.1.3M Trans Leak Detect Syss	SC: Entry Doors SC: Vent Station Struct SS: Tank Level Detect Syss SC: Trans Leak Detect Syss	LCO: 3.1.1M Trans Sys Cover/Entry Doors AC: 5.12M Trans Contrls: - Material Balance AC: 5.14 Emerg Prep AC: 5.22M Trans Sys cover removal/entry door closure cntrls LCO: 3.1.3M Trans Leak Detect Syss	Controls based on Reanalyzed Accident for W058 Project
18X	RCSTS-09-TEMP02	Release of radioactive supernate to soil surface from overflow of vent station due to piping system leak.	Freezing of piping within the vent station due to cold temperatures caused by running the exhauster	SC: Trans Leak Detect Sys	LCO: 3.1.3M Trans Leak Detect Syss	SC: Entry Doors SC: Vent Station Struct SS: Tank Level Detect Syss SC: Trans Leak Detect Syss	LCO: 3.1.1M Trans Sys Cover/Entry Doors AC: 5.12M Trans Contrls: - Material Balance AC: 5.14 Emerg Prep AC: 5.22M Trans Sys cover removal/entry door closure cntrls LCO: 3.1.3M Trans Leak Detect Syss	Controls based on Reanalyzed Accident for W058 Project

Table D-1. Safety SSCs and TSRs For Potential S3 and S2 Consequences. (63 sheets)

BIO Acc	ID	Hazardous Conditions	Cause	Prev SSC	Prev TSR	Mit SSC	Mit TSR	Control MEMO
18X	RCSTS-15/16-INTEG03b	Release of radioactive slurry to the soil surface from overflow of diversion box due to piping system leak.	Failure of piping due to external event (undermining from broken fluid transfer lines in vicinity)	SC: Trans Leak Detect Sys	LCO: 3.1.3M Trans Leak Detect Syss	SC: Entry Doors SC: Diversion Box Struct SS: Tank Level Detect Syss	LCO: 3.1.1M Trans Sys Cover/Entry Doors AC: 5.12M Trans Contrls: - Material Balance AC: 5.14 Emerg Prep AC: 5.22M Trans Sys cover removal/entry door closure cntrls LCO: 3.1.3M Trans Leak Detect Syss	Controls based on Reanalyzed Accident for W058 Project
18X	RCSTS-1FS-LEVEL03	Release of caustic solution and radionuclides to the sump pit from the water flush tank due to over filling of tank.	Overfilling of flush tank from flow of radioactive waste from transfer line. Block valves open, valve limit switch and pressure switch fail and administrative control of raw water block valves fail	SC: Press Switch Interlocks/Alarms (water flush jumper) SC: Press Switch Interlocks/Alarms (water service lines) SC: Backflow Prevention Sys (water flush jumper)	AC: 5.12M Trans Cntrls: - Double valve isolation on intercon lines - Config Management - Route Verification	SS: Tank Level Detect Syss	LCO: 3.1.2M Service Water Pres Detection Syss AC: 5.12M Trans Contrls: - Material Balance AC: 5.14 Emerg Prep	Controls based on Reanalyzed Accident for W058 Project

Table D-1. Safety SSCs and TSRs For Potential S3 and S2 Consequences. (63 sheets)

BIO Acc	ID	Hazardous Conditions	Cause	Prev SSC	Prev TSR	Mit SSC	Mit TSR	Control MEMO
18X	RCSTS-22-PRESS03*	Release of radioactive supernate to soil surface from overflow of 244-A Lift Station due to piping break.	Dead heading of flow through the 244-A Lift Station with failure of PRV and subsequent downstream pipe failure	SC: Trans Leak Detect Syss SC: Press Relief Sys SC: Rupture Disk	LCO: 3.1.3M Trans Leak Detect Syss	SS: Tank Level Detect Syss SC: Trans Leak Detect Syss	LCO: 3.1.1M Trans Sys Cover AC: 5.12M Trans Contrls: - Material Balance AC: 5.14 Emerg Prep AC: 5.22M Trans Sys cover removal LCO: 3.1.3M Trans Leak Detect Syss	Controls based on Reanalyzed Accident for W058 Project
18X	RCSTS-22-PRESS04*	Release of radioactive slurry to soil surface from overflow of 244-A Lift Station due to piping break.	Dead heading of flow through the 244-A Lift Station with failure of PRV and subsequent downstream pipe failure	SC: Trans Leak Detect Syss SC: Press Relief Sys SC: Rupture Disk	LCO: 3.1.3M Trans Leak Detect Syss	SS: Tank Level Detect Syss SC: Trans Leak Detect Syss	LCO: 3.1.1M Trans Sys Cover AC: 5.12M Trans Contrls: - Material Balance AC: 5.14 Emerg Prep AC: 5.22M Trans Sys cover removal LCO: 3.1.3M Trans Leak Detect Syss	Controls based on Reanalyzed Accident for W058 Project

Table D-1. Safety SSCs and TSRs For Potential S3 and S2 Consequences. (63 sheets)

BIO Acc	ID	Hazardous Conditions	Cause	Prev SSC	Prev TSR	Mit SSC	Mit TSR	Control MEMO
18X	RCSTS-24-FLOW/INTEG 01	Release of radioactive slurry to soil surface from overflow of lift station due to piping system leak.	Failure of jumper due to corrosion	SC: Trans Leak Detect Syss	AC: 5.12M Trans Cntrls: - Jumper Leak Testing LCO: 3.1.3M Trans Leak Detect Syss	SS: Tank Level Detect Syss SS: Trans Sys Covers SC: Trans Leak Detect Syss	LCO: 3.1.1M Trans Sys Cover AC: 5.12M Trans Cntrls: - Material Balance - Pit floor drains open AC: 5.22M Trans Sys cover removal AC: 5.14 Emerg Prep LCO: 3.1.3M Trans Leak Detect Syss	LCO: 3.1.1M Trans Sys Cover AC: 5.12M Trans Cntrls: - Material Balance - Pit floor drains open AC: 5.22M Trans Sys cover removal AC: 5.14 Emerg Prep LCO: 3.1.3M Trans Leak Detect Syss
18X	RCSTS-24-FLOW/INTEG 02	Release of radioactive supernate to soil surface from overflow of 244-A Lift Station due to piping system leak.	Failure of jumper due to corrosion	SC: Trans Leak Detect Syss	AC: 5.12M Trans Cntrls: - Jumper Leak Testing LCO: 3.1.3M Trans Leak Detect Syss	SS: Tank Level Detect Syss SS: Trans Sys Covers SC: Trans Leak Detect Syss	LCO: 3.1.1M Trans Sys Cover AC: 5.12M Trans Cntrls: - Material Balance - Pit floor drains open AC: 5.22M Trans Sys cover removal AC: 5.14 Emerg Prep LCO: 3.1.3M Trans Leak Detect Syss	LCO: 3.1.1M Trans Sys Cover AC: 5.12M Trans Cntrls: - Material Balance - Pit floor drains open AC: 5.22M Trans Sys cover removal AC: 5.14 Emerg Prep LCO: 3.1.3M Trans Leak Detect Syss

Table D-1. Safety SSCs and TSRs For Potential S3 and S2 Consequences. (63 sheets)

BIO Acc	ID	Hazardous Conditions	Cause	Prev SSC	Prev TSR	Mit SSC	Mit TSR	Control MEMO
18X	RCSTS-24-FLOW/INTEG 03	Release of radioactive slurry to soil surface from overflow of lift station due to piping system leak.	Failure of jumper due to gasket failure	SC: Trans Leak Detect Syss	AC: 5.12M Trans Cntrls: - Jumper Leak Testing LCO: 3.1.3M Trans Leak Detect Syss	SS: Tank Level Detect Syss SS: Trans Sys Covers SC: Trans Leak Detect Syss	LCO: 3.1.1M Trans Sys Cover AC: 5.12M Trans Cntrls: - Material Balance - Pit floor drains open AC: 5.22M Trans Sys cover removal AC: 5.14 Emerg Prep LCO: 3.1.3M Trans Leak Detect Syss	Controls based on Reanalyzed Accident for W058 Project
18X	RCSTS-24-FLOW/INTEG 04	Release of radioactive supernate to soil surface from overflow of 244-A Lift Station due to piping system leak.	Failure of jumper due to gasket failure	SC: Trans Leak Detect Syss	AC: 5.12M Trans Cntrls: - Jumper Leak Testing LCO: 3.1.3M Trans Leak Detect Syss	SS: Tank Level Detect Syss SS: Trans Sys Covers SC: Trans Leak Detect Syss	LCO: 3.1.1M Trans Sys Cover AC: 5.12M Trans Cntrls: - Material Balance - Pit floor drains open AC: 5.22M Trans Sys cover removal AC: 5.14 Emerg Prep LCO: 3.1.3M Trans Leak Detect Syss	Controls based on Reanalyzed Accident for W058 Project

Table D-1. Safety SSCs and TSRs For Potential S3 and S2 Consequences. (63 sheets)

BIO Acc	ID	Hazardous Conditions	Cause	Prev SSC	Prev TSR	Mit SSC	Mit TSR	Control MEMO
18X	RCSTS-24-FLOW/INTEG 05	Release of radioactive slurry to soil surface from overflow of lift station due to piping system leak.	Failure of jumper due to misalignment	SC: Trans Leak Detect Syss	AC: 5.12M Trans Cntrls: - Jumper Leak Testing LCO: 3.1.3M Trans Leak Detect Syss	SS: Trans Sys Covers SS: Tank Level Detect Syss SC: Trans Leak Detect Syss	LCO: 3.1.1M Trans Sys Cover AC: 5.12M Trans Cntrls: - Material Balance - Pit floor drains open AC: 5.14 Emerg Prep AC: 5.22M Trans Sys cover removal LCO: 3.1.3M Trans Leak Detect Syss	Controls based on Reanalyzed Accident for W058 Project
18X	RCSTS-24-FLOW/INTEG 06	Release of radioactive supernate to soil surface from overflow of 244-A Lift Station due to piping system leak.	Failure of jumper due to misalignment	SC: Trans Leak Detect Syss	AC: 5.12M Trans Cntrls: - Jumper Leak Testing LCO: 3.1.3M Trans Leak Detect Syss	SS: Trans Sys Covers SS: Tank Level Detect Syss SC: Trans Leak Detect Syss	LCO: 3.1.1M Trans Sys Cover AC: 5.12M Trans Cntrls: - Material Balance - Pit floor drains open AC: 5.14 Emerg Prep AC: 5.22M Trans Sys cover removal LCO: 3.1.3M Trans Leak Detect Syss	Controls based on Reanalyzed Accident for W058 Project

Table D-1. Safety SSCs and TSRs For Potential S3 and S2 Consequences. (63 sheets)

BIO Acc	ID	Hazardous Conditions	Cause	Prev SSC	Prev TSR	Mit SSC	Mit TSR	Control MEMO
18X	RCSTS-24-FLOW01	Release of radioactive slurry to soil surface from overflow of lift station due to piping system leak.	Computer failure or human error causing misrouting of material when flow path is not completely connected	SC: Trans Leak Detect Syss	AC: 5.12M Trans Cntrls: - Double valve isolation on intercon lines - Config Management - Route Verification - Caps/blanks on open nozzles AC: 5.20 Trans Pump admin lock cntrls LCO: 3.1.3M Trans Leak Detect Syss	SS: Trans Sys Covers SS: Tank Level Detect Syss SC: Trans Leak Detect Syss	LCO: 3.1.1M Trans Sys Cover AC: 5.12M Trans Cntrls: - Material Balance - Pit floor drains open AC: 5.14 Emerg Prep AC: 5.22M Trans Sys cover removal LCO: 3.1.3M Trans Leak Detect Syss	Controls based on Reanalyzed Accident for W058 Project
18X	RCSTS-24-FLOW02	Release of radioactive supernate to soil surface from overflow of 244-A Lift Station due to piping system leak.	Computer failure or human error causing misrouting of material when flow path is not completely connected	SC: Trans Leak Detect Syss	AC: 5.12M Trans Cntrls: - Double valve isolation on intercon lines - Config Management - Route Verification - Caps/blanks on open nozzles AC: 5.20 Trans Pump admin lock cntrls LCO: 3.1.3M Trans Leak Detect Syss	SS: Trans Sys Covers SS: Tank Level Detect Syss SC: Trans Leak Detect Syss	LCO: 3.1.1M Trans Sys Cover AC: 5.12M Trans Cntrls: - Material Balance - Pit floor drains open AC: 5.14 Emerg Prep AC: 5.22M Trans Sys cover removal LCO: 3.1.3M Trans Leak Detect Syss	Controls based on Reanalyzed Accident for W058 Project

Table D-1. Safety SSCs and TSRs For Potential S3 and S2 Consequences. (63 sheets)

BIO Acc	ID	Hazardous Conditions	Cause	Prev SSC	Prev TSR	Mit SSC	Mit TSR	Control MEMO
18X	RCSTS-24-FLOW03	Release of radioactive slurry to soil surface from overflow of lift station due to piping system leak.	External leak of valve or valves to the lift station	SC: Trans Leak Detect Syss	LCO: 3.1.3M Trans Leak Detect Syss	SS: Tank Level Detect Syss SS: Trans Sys Covers SC: Trans Leak Detect Syss	LCO: 3.1.1M Trans Sys Cover AC: 5.12M Trans Contrls: - Material Balance AC: 5.14 Emerg Prep AC: 5.22M Trans Sys cover removal LCO: 3.1.3M Trans Leak Detect Syss	Controls based on Reanalyzed Accident for W058 Project
18X	RCSTS-24-FLOW04	Release of radioactive supernate to soil surface from overflow of 244-A Lift Station due to piping system leak.	External leak of valve or valves to the lift station	SC: Trans Leak Detect Syss	LCO: 3.1.3M Trans Leak Detect Syss	SS: Tank Level Detect Syss SS: Trans Sys Covers SC: Trans Leak Detect Syss	LCO: 3.1.1M Trans Sys Cover AC: 5.12M Trans Contrls: - Material Balance AC: 5.14 Emerg Prep AC: 5.22M Trans Sys cover removal LCO: 3.1.3M Trans Leak Detect Syss	Controls based on Reanalyzed Accident for W058 Project
18X	RCSTS-24-INTEG01	Release of radioactive slurry to soil surface from overflow of lift station due to piping system leak.	External event (airplane crash, etc)	None Required	None Required	None Required	AC: 5.14 Emerg Prep	No controls required based on the TWRS BIO
18X	RCSTS-24-INTEG02	Release of radioactive supernate to soil surface from overflow of 244-A Lift Station due to piping system leak.	External event (airplane crash, etc)	None Required	None Required	None Required	AC: 5.14 Emerg Prep	No controls required based on the TWRS BIO

Table D-1. Safety SSCs and TSRs For Potential S3 and S2 Consequences. (63 sheets)

BIO Acc	ID	Hazardous Conditions	Cause	Prev SSC	Prev TSR	Mit SSC	Mit TSR	Control MEMO
18X	RCSTS-24-PRES01	Release of radioactive supernate to soil surface from overflow of 244-A Lift Station due to piping system leak.	Steam hammer or thermal stress caused by loss of flushwater flow to steam mixing chamber in east area	SC: Trans Leak Detect Syss	AC: 5.12M Trans Cntrls: - Config Management - Route Verification LCO: 3.1.3M Trans Leak Detect Syss	SS: Tank Level Detect Syss SS: Trans Sys Covers SC: Trans Leak Detect Syss	LCO: 3.1.1M Trans Sys Cover AC: 5.12M Trans Cntrls: - Material Balance - Pit floor drains open AC: 5.22M Trans Sys cover removal AC: 5.14 Emerg Prep LCO: 3.1.3M Trans Leak Detect Syss	Controls based on Reanalyzed Accident for W058 Project
18X	RCSTS-24-PRES02	Release of radioactive slurry to soil surface from overflow of lift station due to piping system leak.	Water hammer	SC: Trans Leak Detect Syss SC: Press Relief Sys SC: Rupture Disk	AC: 5.12M Trans Cntrls: - Config Management - Route Verification LCO: 3.1.3M Trans Leak Detect Syss LCO: 3.1.5M Press Relief and Rupture Disk	SS: Tank Level Detect Syss SS: Trans Sys Covers SC: Trans Leak Detect Syss	LCO: 3.1.1M Trans Sys Cover AC: 5.12M Trans Cntrls: - Material Balance - Pit floor drains open AC: 5.22M Trans Sys cover removal AC: 5.14 Emerg Prep LCO: 3.1.3M Trans Leak Detect Syss	Controls based on Reanalyzed Accident for W058 Project

Table D-1. Safety SSCs and TSRs For Potential S3 and S2 Consequences. (63 sheets)

BIO Acc	ID	Hazardous Conditions	Cause	Prev SSC	Prev TSR	Mit SSC	Mit TSR	Control MEMO
18X	RCSTS-24-PRES03	Release of radioactive supernate to soil surface from overflow of 244-A Lift Station due to piping system leak.	Water hammer	SC: Trans Leak Detect Syss SC: Press Relief Sys SC: Rupture Disk	AC: 5.12M Trans Cntrls: - Config Management - Route Verification LCO: 3.1.3M Trans Leak Detect Syss LCO: 3.1.5M Press Relief and Rupture Disk	SS: Tank Level Detect Syss SS: Trans Sys Covers SC: Trans Leak Detect Syss	LCO: 3.1.1M Trans Sys Cover AC: 5.12M Trans Contrls: - Material Balance - Pit floor drains open AC: 5.22M Trans Sys cover removal AC: 5.14 Emerg Prep LCO: 3.1.3M Trans Leak Detect Syss	Controls based on Reanalyzed Accident for W058 Project
19X	RCSTS-04/05-INTEG01a	Release of radioactive supernate to the soil surface from the underground piping between the SY-A or SY-B valve pit and a diversion box due to piping system leak.	Failure of primary and encasement piping due to corrosion	SC: Transfer Piping SC: Pipe Encasement	None Required	SS: Trans Leak Detect Sys SS: Tank Level Detection Syss	AC: 5.12M Transr Cntrls: - Material balance AC: 5.14 Emerg Prep LCO: 3.1.3M Trans Leak Detect Syss	Controls based on Reanalyzed Accident for W058 Project
19X	RCSTS-04/05-INTEG01b	Release of radioactive supernate to the soil surface from the underground piping between the SY-A or SY-B valve pit and a diversion box due to piping system leak.	Failure of primary and encasement piping due to unrecognized material flaw	SC: Transfer Piping SC: Pipe Encasement	None	SC: Trans Leak Detect Syss SS: Tank Level Detection Syss	AC: 5.12M Transr Cntrls: - Material balance AC: 5.14 Emerg Prep LCO: 3.1.3M Trans Leak Detect Syss	Controls based on Reanalyzed Accident for W058 Project
19X	RCSTS-04/05-INTEG02	Release of radioactive supernate to the soil surface from the underground piping between the SY-A or SY-B valve pit and a diversion box due to piping system leak.	Failure of primary and encasement piping due to external event (airplane crash, volcanism, etc)	None Required	None Required	None Required	AC: 5.14 Emerg Prep	No controls required based on the TWRS BIO

Table D-1. Safety SSCs and TSRs For Potential S3 and S2 Consequences. (63 sheets)

BIO Acc	ID	Hazardous Conditions	Cause	Prev SSC	Prev TSR	Mit SSC	Mit TSR	Control MEMO
19X	RCSTS-04/05-INTEG03	Release of radioactive supernate to the soil surface from the underground piping between the SY-A or SY-B valve pit and the diversion box due to piping system leak.	Failure of primary and encasement piping due to external event (excavation accident)	SC: Transfer Piping SC: Pipe Encasement	AC: 5.17 Excavation Controls	SS: Trans Leak Detection Sys SS: Tank Level Detection Syss	LCO: 3.1.3M Trans Leak Detect Syss AC: 5.12M Transr Cntrls: - Material balance AC: 5.14 Emerg Prep	Controls based on Reanalyzed Accident for W058 Project
19X	RCSTS-04/05-INTEG04	Release of radioactive supernate to the soil surface from the underground piping between the SY-A or SY-B valve pit and a diversion box due to piping system leak.	Failure of primary and encasement piping due to external event (undermining from broken fluid transfer lines in vicinity)	SC: Press Switch Interlocks/alarms (water service line) SC: Transfer Piping SC: Pipe Encasement	LCO: 3.1.2M Service Water Press Detection Sys	SC: Trans Leak Detection Syss SS: Tank Level Detection Syss	LCO: 3.1.3M Trans Leak Detect Syss AC: 5.12M Transr Cntrls: - Material balance AC: 5.14 Emerg Prep	Controls based on Reanalyzed Accident for W058 Project
19X	RCSTS-04/05-TEMP01	Release of radioactive supernate to the soil surface from the underground piping between the SY-A or SY-B valve pit and a diversion box due to piping system leak.	Failure of primary and encasement piping due to freezing	SC: Transfer Piping SC: Pipe Encasement	None	SS: Trans Leak Detect Sys SS: Tank Level Detection Syss	AC: 5.12M Transr Cntrls: - Material balance AC: 5.14 Emerg Prep LCO: 3.1.3M Trans Leak Detect Syss	Controls based on Reanalyzed Accident for W058 Project
19X	RCSTS-10/11-INTEG01	Release of radioactive supernate to the soil from the underground piping between the diversion box and the vent station due to piping system leak.	Failure of primary and encasement piping due to external event (undermining from broken fluid transfer lines in vicinity)	SC: Press Switch Interlocks/alarms (water service line) SC: Transfer Piping SC: Pipe Encasement	LCO: 3.1.2M Service Water Press Detection Sys	SS: Trans Leak Detection Sys SS: Tank Level Detection Syss	LCO: 3.1.3M Trans Leak Detect Syss AC: 5.12M Transr Cntrls: - Material balance AC: 5.14 Emerg Prep	Controls based on Reanalyzed Accident for W058 Project

Table D-1. Safety SSCs and TSRs For Potential S3 and S2 Consequences. (63 sheets)

BIO Acc	ID	Hazardous Conditions	Cause	Prev SSC	Prev TSR	Mit SSC	Mit TSR	Control MEMO
19X	RCSTS-10/11-INTEG02a	Release of radioactive supernate to the soil from the underground piping between the diversion box and the vent station due to piping system leak.	Failure of primary and encasement piping due to corrosion	SC: Transfer Piping SC: Pipe Encasement	None Required	SS: Trans Leak Detect Sys SS: Tank Level Detection Syss	AC: 5.12M Transr Cntrls: - Material balance AC: 5.13 Encasement Seal Loop Controls AC: 5.14 Emerg Prep	Controls based on Reanalyzed Accident for W058 Project
19X	RCSTS-10/11-INTEG03a	Release of radioactive supernate to the soil from the underground piping between the diversion box and the vent station due to piping system leak.	Failure of primary and encasement piping due to external event (excavation accident)	SC: Transfer Piping SC: Pipe Encasement	AC: 5.17 Excavation Controls	SS: Trans Leak Detection Sys SS: Tank Level Detection Syss	LCO: 3.1.3M Trans Leak Detect Syss AC: 5.12M Transr Cntrls: - Material balance AC: 5.14 Emerg Prep	Controls based on Reanalyzed Accident for W058 Project
19X	RCSTS-10/11-INTEG04	Release of radioactive supernate to the soil from the underground piping between the diversion box and the vent station due to piping system leak.	Failure of primary and encasement piping due to external event (airplane crash, volcanism etc)	None Required	None Required	None Required	AC: 5.14 Emerg Prep	No controls required based on the TWRS BIO
19X	RCSTS-10/11-INTEG05a	Release of radioactive supernate to the soil from the underground piping between the diversion box and the vent station due to piping system leak.	Failure of primary and encasement piping due to unrecognized material flaw	SC: Transfer Piping SC: Pipe Encasement	None Required	SS: Trans Leak Detect Sys SS: Tank Level Detection Syss	AC: 5.12M Transr Cntrls: - Material balance AC: 5.14 Emerg Prep LCO: 3.1.3M Trans Leak Detect Syss	Controls based on Reanalyzed Accident for W058 Project
19X	RCSTS-10/11-PRES01a	Release of radioactive supernate to the soil from the underground piping between the diversion box and the vent station due to piping system leak.	Failure of primary and encasement piping due to water hammer	SC: Transfer Piping SC: Pipe Encasement	None	SC: Trans Leak Detect Syss SS: Tank Level Detection Syss	AC: 5.12M Transr Cntrls: - Material balance AC: 5.14 Emerg Prep LCO: 3.1.3M Trans Leak Detect Syss	Controls based on Reanalyzed Accident for W058 Project

Table D-1. Safety SSCs and TSRs For Potential S3 and S2 Consequences. (63 sheets)

BIO Acc	ID	Hazardous Conditions	Cause	Prev SSC	Prev TSR	Mit SSC	Mit TSR	Control MEMO
19X	RCSTS-10/11-TEMP01	Release of radioactive supernate to the soil from the underground piping between the diversion box and the vent station due to piping system leak.	Failure of primary piping and encasement due to freezing	SC: Transfer Piping SC: Pipe Encasement	None	SS: Trans Leak Detect Sys SS: Tank Level Detection Syss	AC: 5.12M Transr Cntrls: - Material balance AC: 5.14 Emerg Prep LCO: 3.1.3M Trans Leak Detect Syss	Controls based on Reanalyzed Accident for W058 Project
19X	RCSTS-10/11-TEMP02	Release of radioactive supernate to the soil from the underground piping between the diversion box and the vent station due to piping system leak.	Failure of primary and encasement piping due to thermal stress	SC: Transfer Piping SC: Pipe Encasement	None	SS: Trans Leak Detect Sys SS: Tank Level Detection Syss	AC: 5.12M Transr Cntrls: - Material balance AC: 5.14 Emerg Prep LCO: 3.1.3M Trans Leak Detect Syss	Controls based on Reanalyzed Accident for W058 Project
19X	RCSTS-12/13-INTEG01	Release of radioactive supernate to the soil from the underground piping between the vent station and the 244-A Lift Station due to piping system leak.	Failure of primary and encasement piping due to external event (undermining from broken fluid transfer lines in vicinity)	SC: Press Switch Interlocks/alarms (water service line) SC: Transfer Piping SC: Pipe Encasement	LCO: 3.1.2M Service Water Press Detection Sys	SC: Trans Leak Detection Syss SS: Tank Level Detection Syss	LCO: 3.1.3M Trans Leak Detect Syss AC: 5.12M Transr Cntrls: - Material balance AC: 5.14 Emerg Prep	Controls based on Reanalyzed Accident for W058 Project
19X	RCSTS-12/13-INTEG02a	Release of radioactive supernate to the soil from the underground piping between the vent station and the 244-A Lift Station due to piping system leak.	Failure of primary and encasement piping due to corrosion	SC: Transfer Piping SC: Pipe Encasement	None Required	SC: Trans Leak Detect Syss SS: Tank Level Detection Syss	AC: 5.12M Transr Cntrls: - Material balance AC: 5.14 Emerg Prep LCO: 3.1.3M Trans Leak Detect Syss	Controls based on Reanalyzed Accident for W058 Project

Table D-1. Safety SSCs and TSRs For Potential S3 and S2 Consequences. (63 sheets)

BIO Acc	ID	Hazardous Conditions	Cause	Prev SSC	Prev TSR	Mit SSC	Mit TSR	Control MEMO
19X	RCSTS-12/13-INTEG03a	Release of radioactive supernate to the soil from the underground piping between the vent station and the 244-A Lift Station due to piping system leak.	Failure of primary and encasement piping due to external event (excavation accident)	SC: Transfer Piping SC: Pipe Encasement	AC: 5.17 Excavation Controls	SC: Trans Leak Detect Syss SS: Tank Level Detection Syss	AC: 5.12M Transr Cntrls: - Material balance AC: 5.14 Emerg Prep LCO: 3.1.3M Trans Leak Detect Syss	Controls based on Reanalyzed Accident for W058 Project
19X	RCSTS-12/13-INTEG04	Release of radioactive supernate to the soil from the underground piping between the vent station and the 244-A Lift Station due to piping system leak.	Failure of primary and encasement piping due to external event (airplane crash, volcanism etc)	None Required	None Required	None Required	AC: 5.14 Emerg Prep	No controls required based on the TWRS BIO
19X	RCSTS-12/13-INTEG05a	Release of radioactive supernate to the soil from the underground piping between the vent station and the 244-A Lift Station due to piping system leak.	Failure of primary and encasement piping due to unrecognized material flaw	SC: Transfer Piping SC: Pipe Encasement	None Required	SC: Trans Leak Detect Syss SS: Tank Level Detection Syss	AC: 5.12M Transr Cntrls: - Material balance AC: 5.14 Emerg Prep LCO: 3.1.3M Trans Leak Detect Syss	Controls based on Reanalyzed Accident for W058 Project
19X	RCSTS-12/13-PRES01a	Release of radioactive supernate to the soil from the underground piping between the vent station and the 244-A Lift Station due to piping system leak.	Failure of primary and encasement piping due to steam hammer caused by loss of flushwater flow to steam mixing chamber in east	SC: Transfer Piping SC: Pipe Encasement	None	SC: Trans Leak Detect Syss SS: Tank Level Detection Syss	AC: 5.12M Transr Cntrls: - Material balance AC: 5.14 Emerg Prep LCO: 3.1.3M Trans Leak Detect Syss	Controls based on Reanalyzed Accident for W058 Project

Table D-1. Safety SSCs and TSRs For Potential S3 and S2 Consequences. (63 sheets)

BIO Acc	ID	Hazardous Conditions	Cause	Prev SSC	Prev TSR	Mit SSC	Mit TSR	Control MEMO
19X	RCSTS-12/13-PRES02	Release of radioactive supernate to the soil from the underground piping between the vent station and the 244-A Lift Station due to piping system leak.	Failure of primary and encasement piping due to water hammer	SC: Transfer Piping SC: Pipe Encasement	None	SC: Trans Leak Detect Syss SS: Tank Level Detection Syss	AC: 5.12M Transr Cntrls: - Material balance AC: 5.14 Emerg Prep LCO: 3.1.3M Trans Leak Detect Syss	Controls based on Reanalyzed Accident for W058 Project
19X	RCSTS-12/13-TEMP01	Release of radioactive supernate to the soil from the underground piping between the vent station and the 244-A Lift Station due to piping system leak.	Failure of primary piping and encasement due to freezing	SC: Transfer Piping SC: Pipe Encasement	None	SC: Trans Leak Detect Syss SS: Tank Level Detection Syss	AC: 5.12M Transr Cntrls: - Material balance AC: 5.14 Emerg Prep LCO: 3.1.3M Trans Leak Detect Syss	Controls based on Reanalyzed Accident for W058 Project
19X	RCSTS-12/13-TEMP02	Release of radioactive supernate to the soil from the underground piping between the vent station and the 244-A Lift Station due to piping system leak.	Failure of primary and encasement piping due to thermal stress	SC: Transfer Piping SC: Pipe Encasement	None	SC: Trans Leak Detect Syss SS: Tank Level Detection Syss	AC: 5.12M Transr Cntrls: - Material balance AC: 5.14 Emerg Prep LCO: 3.1.3M Trans Leak Detect Syss	Controls based on Reanalyzed Accident for W058 Project
19X	RCSTS-15/16-INTEG01a	Release of radioactive slurry to the soil surface from the underground piping between the SY-A or SY-B valve pit and a diversion box due to piping system leak.	Failure of primary and encasement piping due to corrosion	SC: Transfer Piping SC: Pipe Encasement	None Required	SC: Trans Leak Detect Syss SS: Tank Level Detection Syss	AC: 5.12M Transr Cntrls: - Material balance AC: 5.14 Emerg Prep LCO: 3.1.3M Trans Leak Detect Syss	Controls based on Reanalyzed Accident for W058 Project

Table D-1. Safety SSCs and TSRs For Potential S3 and S2 Consequences. (63 sheets)

BIO Acc	ID	Hazardous Conditions	Cause	Prev SSC	Prev TSR	Mit SSC	Mit TSR	Control MEMO
19X	RCSTS-15/16-INTEG01b	Release of radioactive slurry to the soil surface from the underground piping between the SY-A or SY-B valve pit and a diversion box due to piping system leak.	Failure of primary and encasement piping due to unrecognized material flaw	SC: Transfer Piping SC: Pipe Encasement	None Required	SC: Trans Leak Detect Syss SS: Tank Level Detection Syss	AC: 5.12M Transr Cntrls: - Material balance AC: 5.14 Emerg Prep LCO: 3.1.3M Trans Leak Detect Syss	Controls based on Reanalyzed Accident for W058 Project
19X	RCSTS-15/16-INTEG02	Release of radioactive slurry to the soil surface from the underground piping between the SY-A or SY-B valve pit and the diversion box due to piping system leak.	Failure of primary and encasement piping due to external event (excavation accident)	SC: Transfer Piping SC: Pipe Encasement	AC: 5.17 Excavation Controls	SS: Trans Leak Detection Sys SS: Tank Level Detection Syss	AC: 5.12M Transr Cntrls: - Material balance AC: 5.14 Emerg Prep LCO: 3.1.3M Trans Leak Detect Syss	Controls based on Reanalyzed Accident for W058 Project
19X	RCSTS-15/16-INTEG03a	Release of radioactive slurry to the soil surface from the underground piping between the SY-A or SY-B valve pit and a diversion box due to piping system leak.	Failure of primary and encasement piping due to external event (undermining from broken fluid transfer lines in vicinity)	SC: Press Switch Interlocks/alarms (water service line) SC: Transfer Piping SC: Pipe Encasement	LCO: 3.1.2M Service Water Press Detection Sys	SC: Trans Leak Detection Syss SS: Tank Level Detection Syss	LCO: 3.1.3M Trans Leak Detect Syss AC: 5.12M Transr Cntrls: - Material balance AC: 5.14 Emerg Prep LCO: 3.1.3M Trans Leak Detect Syss	Controls based on Reanalyzed Accident for W058 Project
19X	RCSTS-15/16-INTEG05	Release of radioactive slurry to the soil surface from the underground piping between the SY-A or SY-B valve pit and a diversion box due to piping system leak.	Failure of primary and encasement piping due to external event (airplane crash, volcanism, etc)	None Required	None Required	None Required	AC: 5.14 Emerg Prep	No controls required based on the TWRS BIO

Table D-1. Safety SSCs and TSRs For Potential S3 and S2 Consequences. (63 sheets)

BIO Acc	ID	Hazardous Conditions	Cause	Prev SSC	Prev TSR	Mit SSC	Mit TSR	Control MEMO
19X	RCSTS-15/16-TEMP01	Release of radioactive slurry to the soil surface from the underground piping between the SY-A or SY-B valve pit and a diversion box due to piping system leak.	Failure of primary and encasement piping due to freezing	SC: Transfer Piping SC: Pipe Encasement	None	SC: Trans Leak Detect Syss SS: Tank Level Detection Syss	AC: 5.12M Transr Cntrls: - Material balance AC: 5.14 Emerg Prep LCO: 3.1.3M Trans Leak Detect Syss	Controls based on Reanalyzed Accident for W058 Project
19X	RCSTS-18/19-INTEG01	Release of radioactive slurry to the soil from the underground piping between the diversion box and the vent station due to piping system leak.	Failure of primary and encasement piping due to external event (undermining from broken fluid transfer lines in vicinity)	SC: Press Switch Interlocks/alarms (water service line) SC: Transfer Piping SC: Pipe Encasement	LCO: 3.1.2M Service Water Press Detection Sys	SS: Trans Leak Detection Sys SS: Tank Level Detection Syss	LCO: 3.1.3M Trans Leak Detect Syss AC: 5.12M Transr Cntrls: - Material balance AC: 5.14 Emerg Prep	Controls based on Reanalyzed Accident for W058 Project
19X	RCSTS-18/19-INTEG02	Release of radioactive slurry to the soil from the underground piping between the diversion box and the vent station due to piping system leak.	Failure of primary and encasement piping due to corrosion	SC: Transfer Piping SC: Pipe Encasement	None Required	SS: Trans Leak Detect Sys SS: Tank Level Detection Syss	AC: 5.12M Transr Cntrls: - Material balance AC: 5.14 Emerg Prep LCO: 3.1.3M Trans Leak Detect Syss	Controls based on Reanalyzed Accident for W058 Project
19X	RCSTS-18/19-INTEG03a	Release of radioactive slurry to the soil from the underground piping between the diversion box and the vent station due to piping system leak.	Failure of primary and encasement piping due to external event (excavation accident)	SC: Transfer Piping SC: Pipe Encasement	AC: 5.17 Excavation Controls	SS: Trans Leak Detection Sys SS: Tank Level Detection Syss	LCO: 3.1.3M Trans Leak Detect Syss AC: 5.12M Transr Cntrls: - Material balance AC: 5.14 Emerg Prep	Controls based on Reanalyzed Accident for W058 Project
19X	RCSTS-18/19-INTEG04	Release of radioactive slurry to the soil from the underground piping between the diversion box and the vent station due to piping system leak.	Failure of primary and encasement piping due to external event (airplane crash, volcanism etc)	None Required	None Required	None Required	AC: 5.14 Emerg Prep	No controls required based on the TWRS BIO

Table D-1. Safety SSCs and TSRs For Potential S3 and S2 Consequences. (63 sheets)

BIO Acc	ID	Hazardous Conditions	Cause	Prev SSC	Prev TSR	Mit SSC	Mit TSR	Control MEMO
19X	RCSTS-18/19-INTEG06	Release of radioactive slurry to the soil from the underground piping between the diversion box and the vent station due to piping system leak.	Failure of primary and encasement piping due to unrecognized material flaw	SC: Transfer Piping SC: Pipe Encasement	None Required	SS: Trans Leak Detect Sys SS: Tank Level Detection Syss	AC: 5.12M Transr Cntrls: - Material balance AC: 5.14 Emerg Prep LCO: 3.1.3M Trans Leak Detect Syss	Controls based on Reanalyzed Accident for W058 Project
19X	RCSTS-18/19-PRES01	Release of radioactive slurry to the soil from the underground piping between the diversion box and the vent station due to piping system leak.	Failure of primary and encasement piping due to water hammer	SC: Transfer Piping SC: Pipe Encasement	None	SC: Trans Leak Detect Syss SS: Tank Level Detection Syss	AC: 5.12M Transr Cntrls: - Material balance AC: 5.14 Emerg Prep LCO: 3.1.3M Trans Leak Detect Syss	Controls based on Reanalyzed Accident for W058 Project
19X	RCSTS-18/19-TEMP01	Release of radioactive slurry to the soil from the underground piping between the diversion box and the vent station due to piping system leak.	Failure of primary piping and encasement due to freezing	SC: Transfer Piping SC: Pipe Encasement	None	SC: Trans Leak Detect Syss SS: Tank Level Detection Syss	AC: 5.12M Transr Cntrls: - Material balance AC: 5.14 Emerg Prep LCO: 3.1.3M Trans Leak Detect Syss	Controls based on Reanalyzed Accident for W058 Project
19X	RCSTS-18/19-TEMP02	Release of radioactive slurry to the soil from the underground piping between the diversion box and the vent station due to piping system leak.	Failure of primary and encasement piping due to thermal stress	SC: Transfer Piping SC: Pipe Encasement	None	SC: Trans Leak Detect Syss SS: Tank Level Detection Syss	AC: 5.12M Transr Cntrls: - Material balance AC: 5.14 Emerg Prep LCO: 3.1.3M Trans Leak Detect Syss	Controls based on Reanalyzed Accident for W058 Project

Table D-1. Safety SSCs and TSRs For Potential S3 and S2 Consequences. (63 sheets)

BIO Acc	ID	Hazardous Conditions	Cause	Prev SSC	Prev TSR	Mit SSC	Mit TSR	Control MEMO
20X	RCSTS-03-FLOW/INTEG 03a	Release of radioactive slurry aerosols to the atmosphere caused by spray leak of slurry from the SY-A or SY-B valve pit due to piping system leak.	Failure of jumper due to misalignment (human error)	None Required	AC: 5.12M Trans Cntrls: - Jumper Leak Testing AC: 5.12M Trans Contrls: - Route verification	SC: Trans Sys Covers	LCO: 3.1.1M Trans Sys Cover AC: 5.14 Emerg Prep AC: 5.22M Trans Sys cover removal	Controls based on Reanalyzed Accident for W058 Project
20X	RCSTS-03-FLOW/INTEG 03b	Release of radioactive slurry aerosols to the atmosphere caused by spray leak of slurry from the SY-A or SY-B valve pit due to piping system leak.	Failure of jumper due to gasket failure	None Required	AC: 5.12M Trans Cntrls: - Jumper Leak Testing	SS: Trans Sys Covers	LCO: 3.1.1M Trans Sys Cover AC: 5.22M Trans Sys cover removal AC: 5.14 Emerg Prep	Controls based on Reanalyzed Accident for W058 Project
20X	RCSTS-03-FLOW/INTEG 03c	Release of radioactive slurry aerosols to the atmosphere caused by spray leak of slurry from the SY-A or SY-B valve pit due to piping system leak.	Failure of jumper due to corrosion	None Required	AC: 5.12M Trans Cntrls: - Jumper Leak Testing	SS: Trans Sys Covers	LCO: 3.1.1M Trans Sys Cover AC: 5.22M Trans Sys cover removal AC: 5.14 Emerg Prep	Controls based on Reanalyzed Accident for W058 Project
20X	RCSTS-03-FLOW/INTEG 04a	Release of radioactive supernate aerosols to the atmosphere caused by spray leak of supernate from the SY-A or SY-B valve pit due to piping system leak.	Failure of jumper due to misalignment (human error)	None Required	AC: 5.12M Trans Cntrls: - Jumper Leak Testing AC: 5.12M Trans Contrls: - Independent route verification	SC: Trans Sys Covers	LCO: 3.1.1M Trans Sys Cover AC: 5.14 Emerg Prep AC: 5.22M Trans Sys cover removal	Controls based on Reanalyzed Accident for W058 Project
20X	RCSTS-03-FLOW/INTEG 04b	Release of radioactive supernate aerosols to the atmosphere caused by spray leak of supernate from the SY-A or SY-B valve pit due to piping system leak.	Failure of jumper due to gasket failure	None Required	AC: 5.12M Trans Cntrls: - Jumper Leak Testing	SS: Trans Sys Covers	LCO: 3.1.1M Trans Sys Cover AC: 5.22M Trans Sys cover removal AC: 5.14 Emerg Prep	Controls based on Reanalyzed Accident for W058 Project

Table D-1. Safety SSCs and TSRs For Potential S3 and S2 Consequences. (63 sheets)

BIO Acc	ID	Hazardous Conditions	Cause	Prev SSC	Prev TSR	Mit SSC	Mit TSR	Control MEMO
20X	RCSTS-03-FLOW/INTEG 04c	Release of radioactive supernate aerosols to the atmosphere caused by spray leak of supernate from the SY-A or SY-B valve pit due to piping system leak.	Failure of jumper due to corrosion	None Required	AC: 5.12M Trans Cntrls: - Jumper Leak Testing	SS: Trans Sys Covers	LCO: 3.1.1M Trans Sys Cover AC: 5.22M Trans Sys cover removal AC: 5.14 Emerg Prep	Controls based on Reanalyzed Accident for W058 Project
20X	RCSTS-03-FLOW06	Release of radioactive slurry aerosols to the atmosphere caused by spray leak of slurry from the SY-A or SY-B valve pit due to piping system leak.	Computer failure or human error causing misrouting of material when flow path is not completely connected	None Required	AC: 5.12M Trans Cntrls: - Double valve isolation on intercon lines - Config Management - Route Verification - Caps/blanks on open nozzles AC: 5.20 Trans Pump admin lock cntrls	SS: Trans Sys Covers	LCO: 3.1.1M Trans Sys Cover AC: 5.14 Emerg Prep AC: 5.22M Trans Sys cover removal	Controls based on Reanalyzed Accident for W058 Project
20X	RCSTS-03-FLOW07	Release of radioactive slurry aerosols to the atmosphere caused by spray leak of slurry from the SY-A or SY-B valve pit due to piping system leak.	External leak of valve or valves to the valve pit	None Required	None Required	SS: Trans Sys Covers	LCO: 3.1.1M Trans Sys Cover AC: 5.14 Emerg Prep AC: 5.22M Trans Sys cover removal	Controls based on Reanalyzed Accident for W058 Project
20X	RCSTS-03-FLOW08	Release of radioactive supernate aerosols to the atmosphere caused by spray leak of supernate from the SY-A or SY-B valve pit due to piping system leak.	Computer failure or human error causing misrouting of material when flow path is not completely connected	None Required	AC: 5.12M Trans Cntrls: - Double valve isolation on intercon lines - Config Management - Route Verification - Caps/blanks on open nozzles AC: 5.20 Trans Pump admin lock cntrls	SS: Trans Sys Covers	LCO: 3.1.1M Trans Sys Cover AC: 5.14 Emerg Prep AC: 5.22M Trans Sys cover removal	Controls based on Reanalyzed Accident for W058 Project

Table D-1. Safety SSCs and TSRs For Potential S3 and S2 Consequences. (63 sheets)

BIO Acc	ID	Hazardous Conditions	Cause	Prev SSC	Prev TSR	Mit SSC	Mit TSR	Control MEMO
20X	RCSTS-03-INTEG03	Release of radioactive supernate aerosols to the atmosphere caused by spray leak of supernate from the SY-A or SY-B valve pit due to piping system leak.	External leak of valve or valves to the valve pit	None Required	None Required	SS: Trans Sys Covers	LCO: 3.1.1M Trans Sys Cover AC: 5.14 Emerg Prep AC: 5.22M Trans Sys cover removal	Controls based on Reanalyzed Accident for W058 Project
20X	RCSTS-03-INTEG09	Release of radioactive slurry aerosols to the atmosphere caused by spray leak of slurry from the SY-A or SY-B valve pit due to piping system leak.	External event (airplane crash, etc)	None Required	None Required	None Required	AC: 5.14 Emerg Prep	No controls required based on the TWRS BIO
20X	RCSTS-03-INTEG11	Release of radioactive supernate aerosols to the atmosphere caused by spray leak of supernate from the SY-A or SY-B valve pit due to piping system leak.	External event (airplane crash, etc)	None Required	None Required	None Required	AC: 5.14 Emerg Prep	No controls required based on the TWRS BIO
20X	RCSTS-08-FLOW08	Release of radioactive aerosols to the atmosphere caused by spray leak of slurry from diversion box due to piping system leak.	External leak of valve or valves to the diversion box	None Required	None Required	SC: Entry Doors SC: Diversion Box Struct SS: HEPA filter Sys SS: Emergency pumpout line SS: Air sample line SS: Exhauster hookup	LCO: 3.1.1M Trans Sys Cover/Entry Doors AC: 5.18M HEPA Filter Cntrls AC: 5.14 Emerg Prep AC: 5.22M Trans Sys cover removal/entry door closure cntrls	Controls based on Reanalyzed Accident for W058 Project

Table D-1. Safety SSCs and TSRs For Potential S3 and S2 Consequences. (63 sheets)

BIO Acc	ID	Hazardous Conditions	Cause	Prev SSC	Prev TSR	Mit SSC	Mit TSR	Control MEMO
20X	RCSTS-08-INTEG08	Release of radioactive aerosols to the atmosphere caused by spray leak of slurry from diversion box due to piping system leak.	Failure of piping due to corrosion	None Required	None Required	SC: Entry Doors SC: Diversion Box Struct SS: HEPA filter Sys SS: Emergency pumpout line SS: Air sample line SS: Exhauster hookup	LCO: 3.1.1M Trans Sys Cover/Entry Doors AC: 5.18M HEPA Filter Cntrls AC: 5.14 Emerg Prep AC: 5.22M Trans Sys cover removal/entry door closure cntrls	Controls based on Reanalyzed Accident for W058 Project
20X	RCSTS-08-INTEG09	Release of radioactive aerosols to the atmosphere caused by spray leak of slurry from diversion box due to piping system leak.	External event (airplane crash, etc)	None Required	None Required	None Required	AC: 5.14 Emerg Prep	No controls required based on the TWRS BIO
20X	RCSTS-08-INTEG10	Release of radioactive aerosols to the atmosphere caused by spray leak of supernate from diversion box due to piping system leak.	External event (airplane crash, etc)	None Required	None Required	None Required	AC: 5.14 Emerg Prep	No controls required based on the TWRS BIO
20X	RCSTS-08-INTEG11	Release of radioactive aerosols to the atmosphere caused by spray leak of slurry from diversion box due to piping system leak.	Flammable gas explosion from release of trapped flammable gas within pipe combined with ignition source	None required	AC: Ign Cntrls AC: 5.11 Flam Gas	SC: Entry Doors SC: Diversion Box Struct SS: HEPA filter Sys SS: Emergency pumpout line SS: Air sample line SS: Exhauster hookup	LCO: 3.1.1M Trans Sys Cover/Entry Doors AC: 5.18M HEPA Filter Cntrls AC: 5.14 Emerg Prep AC: 5.22M Trans Sys cover removal/entry door closure cntrls	Controls based on Reanalyzed Accident for W058 Project

Table D-1. Safety SSCs and TSRs For Potential S3 and S2 Consequences. (63 sheets)

BIO Acc	ID	Hazardous Conditions	Cause	Prev SSC	Prev TSR	Mit SSC	Mit TSR	Control MEMO
20X	RCSTS-08-INTEG13	Release of radioactive aerosols to the atmosphere caused by spray leak of slurry from diversion box due to piping system leak.	Failure of piping due to material defect	None Required	None Required	SC: Entry Doors SC: Diversion Box Struct SS: HEPA filter Sys SS: Emergency pumpout line SS: Air sample line SS: Exhauster hookup	LCO: 3.1.1M Trans Sys Cover/Entry Doors AC: 5.18M HEPA Filter Cntrls AC: 5.14 Emerg Prep AC: 5.22M Trans Sys cover removal/entry door closure cntrls	Controls based on Reanalyzed Accident for W058 Project
20X	RCSTS-08-INTEG14	Release of radioactive aerosols to the atmosphere caused by spray leak of slurry from diversion box due to piping system leak.	Slurry pump overspeed causing catastrophic failure of pump with missiles damaging pipe and challenging diversion box confinement	None Required	AC: 5.20 Trans Pump Admin Lock Cntrls	SC: Entry Doors SC: Diversion Box Struct SS: HEPA filter Sys SS: Emergency pumpout line SS: Air sample line SS: Exhauster hookup	LCO: 3.1.1M Trans Sys Cover/Entry Doors AC: 5.18M HEPA Filter Cntrls AC: 5.14 Emerg Prep AC: 5.22M Trans Sys cover removal/entry door closure cntrls	Controls based on Reanalyzed Accident for W058 Project

Table D-1. Safety SSCs and TSRs For Potential S3 and S2 Consequences. (63 sheets)

BIO Acc	ID	Hazardous Conditions	Cause	Prev SSC	Prev TSR	Mit SSC	Mit TSR	Control MEMO
20X	RCSTS-08-PRES04	Release of radioactive aerosols to the atmosphere caused by spray leak of slurry from diversion box due to piping system leak.	Water hammer	None Required	AC: 5.12M Trans Cntrls: - Config Management - Indep Route Verification AC: 5.20 Trans Pump Admin Lock Cntrls	SC: Entry doors SC: Diversion box structure SS: HEPA filter Sys SS: Emergency pumpout line SS: Air sample line SS: Exhauster hookup	LCO: 3.1.1M Trans Sys Covers/Entry Doors AC: 5.18M HEPA Filter Cntrls AC: 5.22M Trans Sys Cover Removal/Entry Door Closure Cntrls AC: 5.14 Emerg Prep	Controls based on Reanalyzed Accident for W058 Project
20X	RCSTS-08-PRES05	Release of radioactive aerosols to the atmosphere caused by spray leak of supernate from diversion box due to piping system leak.	Water hammer	None Required	AC: 5.12M Trans Cntrls: - Config Management - Indep Route Verification AC: 5.20 Trans Pump Admin Lock Cntrls	SC: Entry doors SC: Diversion box structure SS: HEPA filter Sys SS: Emergency pumpout line SS: Air sample line SS: Exhauster hookup	LCO: 3.1.1M Trans Sys Covers/Entry Doors AC: 5.18M HEPA Filter Cntrls AC: 5.22M Trans Sys Cover Removal/Entry Door Closure Cntrls AC: 5.14 Emerg Prep	Controls based on Reanalyzed Accident for W058 Project
20X	RCSTS-08-TEMP02	Release of radioactive aerosols to the atmosphere caused by spray leak of slurry from diversion box due to piping system leak.	Freezing of piping within the diversion box due to cold temperatures caused by running the exhauster	None Required	None Required	SC: Entry doors SC: Diversion box structure SS: HEPA filter Sys SS: Emergency pumpout line SS: Air sample line SS: Exhauster hookup	LCO: 3.1.1M Trans Sys Covers/Entry Doors AC: 5.18M HEPA Filter Cntrls AC: 5.22M Trans Sys Cover Removal/Entry Door Closure Cntrls AC: 5.14 Emerg Prep	Controls based on Reanalyzed Accident for W058 Project

Table D-1. Safety SSCs and TSRs For Potential S3 and S2 Consequences. (63 sheets)

BIO Acc	ID	Hazardous Conditions	Cause	Prev SSC	Prev TSR	Mit SSC	Mit TSR	Control MEMO
20X	RCSTS-08-TEMP03	Release of radioactive aerosols to the atmosphere caused by spray leak of supernate from diversion box due to piping system leak.	Freezing of piping within the diversion box due to cold temperatures caused by running the exhauster	None Required	None Required	SC: Entry doors SC: Diversion box structure SS: HEPA filter Sys SS: Emergency pumpout line SS: Air sample line SS: Exhauster hookup	LCO: 3.1.1M Trans Sys Covers/Entry Doors AC: 5.18M HEPA Filter Cntrls AC: 5.22M Trans Sys Cover Removal/Entry Door Closure Cntrls AC: 5.14 Emerg Prep	Controls based on Reanalyzed Accident for W058 Project
20X	RCSTS-09-FLOW10	Release of radioactive aerosols to the atmosphere caused by spray leak of slurry from vent station due to piping system leak.	External leak of valve or valves to the vent station	None Required	None Required	SC: Entry Doors SC: Vent station structure SS: HEPA filter Sys SS: Emergency pumpout line SS: Air sample line SS: Exhauster hookup	LCO: 3.1.1M Trans Sys Cover/Entry Doors AC: 5.18M HEPA Filter Cntrls AC: 5.14 Emerg Prep AC: 5.22M Trans Sys cover removal/entry door closure cntrls	Controls based on Reanalyzed Accident for W058 Project

Table D-1. Safety SSCs and TSRs For Potential S3 and S2 Consequences. (63 sheets)

BIO Acc	ID	Hazardous Conditions	Cause	Prev SSC	Prev TSR	Mit SSC	Mit TSR	Control MEMO
20X	RCSTS-09-INTEG11	Release of radioactive aerosols to the atmosphere caused by spray leak of slurry from vent station due to piping system leak.	Failure of piping due to corrosion	None Required	None Required	SC: Entry Doors SC: Vent station structure SS: HEPA filter Sys SS: Emergency pumpout line SS: Air sample line SS: Exhauster hookup	LCO: 3.1.1M Trans Sys Cover/Entry Doors AC: 5.18M HEPA Filter Cntrls AC: 5.14 Emerg Prep AC: 5.22M Trans Sys cover removal/entry door closure cntrls	Controls based on Reanalyzed Accident for W058 Project
20X	RCSTS-09-INTEG12	Release of radioactive aerosols to the atmosphere caused by spray leak of slurry from vent station due to piping system leak.	External event (airplane crash, etc)	None Required	None Required	None Required	AC: 5.14 Emerg Prep	No controls required based on the TWRS BIO
20X	RCSTS-09-INTEG13	Release of radioactive aerosols to the atmosphere caused by spray leak of supernate from vent station due to piping system leak.	External event (airplane crash, etc)	None Required	None Required	None Required	AC: 5.14 Emerg Prep	No controls required based on the TWRS BIO
20X	RCSTS-09-INTEG15	Release of radioactive aerosols to the atmosphere caused by spray leak of slurry from vent station due to piping system leak.	Failure of piping due to material defect	None Required	None Required	SC: Entry Doors SC: Vent station structure SS: HEPA filter Sys SS: Emergency pumpout line SS: Air sample line SS: Exhauster hookup	LCO: 3.1.1M Trans Sys Cover/Entry Doors AC: 5.18M HEPA Filter Cntrls AC: 5.14 Emerg Prep AC: 5.22M Trans Sys cover removal/entry door closure cntrls	Controls based on Reanalyzed Accident for W058 Project

Table D-1. Safety SSCs and TSRs For Potential S3 and S2 Consequences. (63 sheets)

BIO Acc	ID	Hazardous Conditions	Cause	Prev SSC	Prev TSR	Mit SSC	Mit TSR	Control MEMO
20X	RCSTS-09-PRES04	Release of radioactive aerosols to the atmosphere caused by spray leak of slurry from vent station due to piping system leak.	Water hammer	None Required	AC: 5.12M Trans Cntrls: - Config Management - Indep Route Verification AC: 5.20 Trans Pump Admin Lock Cntrls	SC: Entry doors SC: Vent station structure SS: HEPA filter Sys SS: Emergency pumpout line SS: Air sample line SS: Exhauster hookup	LCO: 3.1.1M Trans Sys Covers/Entry Doors AC: 5.18M HEPA Filter Cntrls AC: 5.14 Emerg Prep AC: 5.22M Trans Sys Cover Removal/Entry Door Closure Cntrls	Controls based on Reanalyzed Accident for W058 Project
20X	RCSTS-09-PRES05	Release of radioactive aerosols to the atmosphere caused by spray leak of supernate from vent station due to piping system leak.	Water hammer	None Required	AC: 5.12M Trans Cntrls: - Config Management - Indep Route Verification AC: 5.20 Trans Pump Admin Lock Cntrls	SC: Entry doors SC: Vent station structure SS: HEPA filter Sys SS: Emergency pumpout line SS: Air sample line SS: Exhauster hookup	LCO: 3.1.1M Trans Sys Covers/Entry Doors AC: 5.18M HEPA Filter Cntrls AC: 5.14 Emerg Prep AC: 5.22M Trans Sys Cover Removal/Entry Door Closure Cntrls	Controls based on Reanalyzed Accident for W058 Project

Table D-1. Safety SSCs and TSRs For Potential S3 and S2 Consequences. (63 sheets)

BIO Acc	ID	Hazardous Conditions	Cause	Prev SSC	Prev TSR	Mit SSC	Mit TSR	Control MEMO
20X	RCSTS-09-TEMP03	Release of radioactive aerosols to the atmosphere caused by spray leak of slurry from vent station due to piping system leak.	Freezing of piping within the vent station due to cold temperatures caused by running the exhauster	None Required	None Required	SC: Entry doors SC: Vent station structure SS: HEPA filter Sys SS: Emergency pumpout line SS: Air sample line SS: Exhauster hookup	LCO: 3.1.1M Trans Sys Covers/Entry Doors AC: 5.18M HEPA Filter Cntrls AC: 5.22M Trans Sys Cover Removal/Entry Door Closure Cntrls AC: 5.14 Emerg Prep	Controls based on Reanalyzed Accident for W058 Project
20X	RCSTS-09-TEMP04	Release of radioactive aerosols to the atmosphere caused by spray leak of supernate from vent station due to piping system leak.	Freezing of piping within the vent station due to cold temperatures caused by running the exhauster	None Required	None Required	SC: Entry doors SC: Vent station structure SS: HEPA filter Sys SS: Emergency pumpout line SS: Air sample line SS: Exhauster hookup	LCO: 3.1.1M Trans Sys Covers/Entry Doors AC: 5.14 Emerg Prep AC: 5.18M HEPA Filter Cntrls AC: 5.22M Trans Sys Cover Removal/Entry Door Closure Cntrls	Controls based on Reanalyzed Accident for W058 Project
20X	RCSTS-22-PRESS01*	Release of radioactive aerosols to the atmosphere caused by spray leak of slurry from 244-A Lift Station due to piping system leak.	Dead heading of flow through the 244-A Lift Station with failure of PRV and development of crack in downstream piping	SC: Press Relief Sys SC: Rupture Disk	LCO: 3.1.5M Pressure Relief and Rupture Disks	SS: Trans Sys Covers	LCO: 3.1.1M Trans Sys Cover AC: 5.14 Emerg Prep AC: 5.22M Trans Sys cover removal	Controls based on Reanalyzed Accident for W058 Project

Table D-1. Safety SSCs and TSRs For Potential S3 and S2 Consequences. (63 sheets)

BIO Acc	ID	Hazardous Conditions	Cause	Prev SSC	Prev TSR	Mit SSC	Mit TSR	Control MEMO
20X	RCSTS-22-PRESSO2*	Release of radioactive aerosols to the atmosphere caused by spray leak of supernate from 244-A Lift Station due to piping system leak.	Dead heading of flow through the 244-A Lift Station with failure of PRV and development of crack in downstream piping	SC: Press Relief Sys SC: Rupture Disk	LCO: 3.1.5M Pressure Relief and Rupture Disks	SS: Trans Sys Covers	LCO: 3.1.1M Trans Sys Cover AC: 5.14 Emerg Prep AC: 5.22M Trans Sys cover removal	Controls based on Reanalyzed Accident for W058 Project
20X	RCSTS-24-FLOW/INTEG 07	Release of radioactive aerosols to the atmosphere caused by spray leak of slurry from lift station due to piping system leak.	Failure of jumper due to corrosion	None Required	AC: 5.12M Trans Cntrls: - Jumper Leak Testing	SS: Trans Sys Covers	LCO: 3.1.1M Trans Sys Cover AC: 5.22M Trans Sys cover removal AC: 5.14 Emerg Prep	Controls based on Reanalyzed Accident for W058 Project
20X	RCSTS-24-FLOW/INTEG 08	Release of radioactive aerosols to the atmosphere caused by spray leak of supernate from lift station due to piping system leak.	Failure of jumper due to corrosion	None Required	AC: 5.12M Trans Cntrls: - Jumper Leak Testing	SS: Trans Sys Covers	LCO: 3.1.1M Trans Sys Cover AC: 5.22M Trans Sys cover removal AC: 5.14 Emerg Prep	Controls based on Reanalyzed Accident for W058 Project
20X	RCSTS-24-FLOW/INTEG 09	Release of radioactive aerosols to the atmosphere caused by spray leak of slurry from lift station due to piping system leak.	Failure of jumper due to gasket failure	None Required	AC: 5.12M Trans Cntrls: - Jumper Leak Testing	SS: Trans Sys Covers	LCO: 3.1.1M Trans Sys Cover AC: 5.22M Trans Sys cover removal AC: 5.14 Emerg Prep	Controls based on Reanalyzed Accident for W058 Project
20X	RCSTS-24-FLOW/INTEG 10	Release of radioactive aerosols to the atmosphere caused by spray leak of supernate from lift station due to piping system leak.	Failure of jumper due to gasket failure	None Required	AC: 5.12M Trans Cntrls: - Jumper Leak Testing	SS: Trans Sys Covers	LCO: 3.1.1M Trans Sys Cover AC: 5.22M Trans Sys cover removal AC: 5.14 Emerg Prep	Controls based on Reanalyzed Accident for W058 Project

Table D-1. Safety SSCs and TSRs For Potential S3 and S2 Consequences. (63 sheets)

BIO Acc	ID	Hazardous Conditions	Cause	Prev SSC	Prev TSR	Mit SSC	Mit TSR	Control MEMO
20X	RCSTS-24-FLOW/INTEG 11	Release of radioactive aerosols to the atmosphere caused by spray leak of slurry from lift station due to piping system leak.	Failure of jumper due to misalignment	None Required	AC: 5.12M Trans Cntrls: - Jumper Leak Testing	SS: Trans Sys Covers	LCO: 3.1.1M Trans Sys Cover AC: 5.14 Emerg Prep AC: 5.22M Trans Sys cover removal	Controls based on Reanalyzed Accident for W058 Project
20X	RCSTS-24-FLOW/INTEG 12	Release of radioactive aerosols to the atmosphere caused by spray leak of supernate from lift station due to piping system leak.	Failure of jumper due to misalignment	None Required	AC: 5.12M Trans Cntrls: - Jumper Leak Testing	SS: Trans Sys Covers	LCO: 3.1.1M Trans Sys Cover AC: 5.14 Emerg Prep AC: 5.22M Trans Sys cover removal	Controls based on Reanalyzed Accident for W058 Project
20X	RCSTS-24-FLOW05	Release of radioactive aerosols to the atmosphere caused by spray leak of slurry from lift station due to piping system leak.	Computer failure or human error causing misrouting of material when flow path is not completely connected	None Required	AC: 5.12M Trans Cntrls: - Double valve isolation on intercon lines - Config Management - Route Verification - Caps/blanks on open nozzles AC: 5.20 Trans Pump admin lock cntrls	SS: Trans Sys Covers	LCO: 3.1.1M Trans Sys Cover AC: 5.14 Emerg Prep AC: 5.22M Trans Sys cover removal	Controls based on Reanalyzed Accident for W058 Project
20X	RCSTS-24-FLOW06	Release of radioactive aerosols to the atmosphere caused by spray leak of supernate from lift station due to piping system leak.	Computer failure or human error causing misrouting of material when flow path is not completely connected	None Required	AC: 5.12M Trans Cntrls: - Double valve isolation on intercon lines - Config Management - Route Verification - Caps/blanks on open nozzles AC: 5.20 Trans Pump admin lock cntrls	SS: Trans Sys Covers	LCO: 3.1.1M Trans Sys Cover AC: 5.14 Emerg Prep AC: 5.22M Trans Sys cover removal	Controls based on Reanalyzed Accident for W058 Project

Table D-1. Safety SSCs and TSRs For Potential S3 and S2 Consequences. (63 sheets)

BIO Acc	ID	Hazardous Conditions	Cause	Prev SSC	Prev TSR	Mit SSC	Mit TSR	Control MEMO
20X	RCSTS-24-FLOW07	Release of radioactive aerosols to the atmosphere caused by spray leak of slurry from lift station due to piping system leak.	External leak of valve or valves to the lift station	None Required	None Required	SS: Trans Sys Covers	LCO: 3.1.1M Trans Sys Cover AC: 5.14 Emerg Prep AC: 5.22M Trans Sys cover removal	Controls based on Reanalyzed Accident for W058 Project
20X	RCSTS-24-FLOW08	Release of radioactive aerosols to the atmosphere caused by spray leak of supernate from lift station due to piping system leak.	External leak of valve or valves to the lift station	None Required	None Required	SS: Trans Sys Covers	LCO: 3.1.1M Trans Sys Cover AC: 5.14 Emerg Prep AC: 5.22M Trans Sys cover removal	Controls based on Reanalyzed Accident for W058 Project
20X	RCSTS-24-INTEG07	Release of radioactive aerosols to the atmosphere caused by spray leak of slurry from lift station due to piping system leak.	External event (airplane crash, etc)	None Required	None Required	None Required	AC: 5.14 Emerg Prep	No controls required based on the TWRS BIO
20X	RCSTS-24-INTEG08	Release of radioactive aerosols to the atmosphere caused by spray leak of supernate from lift station due to piping system leak.	External event (airplane crash, etc)	None Required	None Required	None Required	AC: 5.14 Emerg Prep	No controls required based on the TWRS BIO
21X	RCSTS-10/11-INTEG03b*	Release of radioactive supernate to the atmosphere from the underground piping between the diversion box and the vent station due to excavation of piping system and subsequent leak.	Failure of primary and encasement piping due to external event (excavation accident)	None required	AC: 5.17 Excavation Cntrls - Excavation permit - Coordination of transfers - Aboveground Labeling of Trans Lines - Restrictions on transfers	None required	AC: 5.17 Excavation Cntrls - Surveillance of all transfer lines with transfer in progress	Controls based on Reanalyzed Accident for W058 Project

Table D-1. Safety SSCs and TSRs For Potential S3 and S2 Consequences. (63 sheets)

BIO Acc	ID	Hazardous Conditions	Cause	Prev SSC	Prev TSR	Mit SSC	Mit TSR	Control MEMO
21X	RCSTS-12/13-INTEG03b*	Release of radioactive supernate to the atmosphere from the underground piping between the vent station and the 244-A Lift Station due to excavation of piping system and subsequent leak.	Failure of primary and encasement piping due to external event (excavation accident)	None required	AC: 5.17 Excavation Cntrls - Excavation permit - Coordination of transfers - Aboveground Labeling of Trans Lines - Restrictions on transfers	None required	AC: 5.17 Excavation Cntrls - Surveillance of all transfer lines with transfer in progress	Controls based on Reanalyzed Accident for W058 Project
21X	RCSTS-18/19-INTEG03b*	Release of radioactive slurry to the atmosphere from the underground piping between the diversion box and the vent station due to excavation of piping system and subsequent leak.	Failure of primary and encasement piping due to external event (excavation accident)	None required	AC: 5.17 Excavation Cntrls - Excavation permit - Coordination of transfers - Aboveground Labeling of Trans Lines - Restrictions on transfers	None required	AC: 5.17 Excavation Cntrls - Surveillance of all transfer lines with transfer in progress	Controls based on Reanalyzed Accident for W058 Project
25X	RCSTS-03-INTEG04	Release of radioactive supernate aerosols to the atmosphere caused by spray leak of supernate from the SY-A or SY-B valve pit due to piping system leak.	Seismic event	None required	None Required	None required	AC: Emergency Preparedness	Controls based on Original BIO Accident Analysis
25X	RCSTS-03-INTEG06	Release of radioactive slurry to the soil surface from overflow in the SY-A or SY-B valve pit due to piping system leak.	Seismic event	None required	None Required	None required	AC: Emergency Preparedness	Controls based on Original BIO Accident Analysis
25X	RCSTS-03-INTEG08	Release of radioactive supernate to the soil surface from overflow in the SY-A or SY-B valve pit due to piping system leak (pool).	Seismic event	None required	None Required	None required	AC: Emergency Preparedness	Controls based on Original BIO Accident Analysis

Table D-1. Safety SSCs and TSRs For Potential S3 and S2 Consequences. (63 sheets)

BIO Acc	ID	Hazardous Conditions	Cause	Prev SSC	Prev TSR	Mit SSC	Mit TSR	Control MEMO
25X	RCSTS-03-INTEG10	Release of radioactive slurry aerosols to the atmosphere caused by spray leak of slurry from the SY-A or SY-B valve pit due to piping system leak.	Seismic event	None required	None Required	None required	AC: Emergency Preparedness	Controls based on Original BIO Accident Analysis
25X	RCSTS-04/05-INTEG05	Release of radioactive supernate to the soil surface from the underground piping between the SY-A or SY-B valve pit and a diversion box due to piping system leak.	Failure of primary and encasement piping due to seismic event	None required	None Required	None required	AC: Emergency Preparedness	Controls based on Original BIO Accident Analysis
25X	RCSTS-08-INTEG06	Release of radioactive slurry to soil surface from overflow of diversion box due to piping system leak.	Seismic event	None required	None Required	None required	AC: Emergency Preparedness	Controls based on Original BIO Accident Analysis
25X	RCSTS-08-INTEG07	Release of radioactive supernate to soil surface from overflow of diversion box due to piping system leak.	Seismic event	None required	None Required	None required	AC: Emergency Preparedness	Controls based on Original BIO Accident Analysis
25X	RCSTS-08-INTEG15	Release of radioactive aerosols to the atmosphere caused by spray leak of slurry from diversion box due to piping system leak.	Seismic event	None required	None Required	None required	AC: Emergency Preparedness	Controls based on Original BIO Accident Analysis
25X	RCSTS-08-INTEG16	Release of radioactive aerosols to the atmosphere caused by spray leak of supernate from diversion box due to piping system leak.	Seismic event	None required	None Required	None required	AC: Emergency Preparedness	Controls based on Original BIO Accident Analysis

Table D-1. Safety SSCs and TSRs For Potential S3 and S2 Consequences. (63 sheets)

BIO Acc	ID	Hazardous Conditions	Cause	Prev SSC	Prev TSR	Mit SSC	Mit TSR	Control MEMO
25X	RCSTS-09-INTEG09	Release of radioactive slurry to soil surface from overflow of vent station due to piping system leak.	Seismic event	None required	None Required	None required	AC: Emergency Preparedness	Controls based on Original BIO Accident Analysis
25X	RCSTS-09-INTEG10	Release of radioactive supernate to soil surface from overflow of vent station due to piping system leak.	Seismic event	None required	None Required	None required	AC: Emergency Preparedness	Controls based on Original BIO Accident Analysis
25X	RCSTS-09-INTEG16	Release of radioactive aerosols to the atmosphere caused by spray leak of slurry from vent station due to piping system leak.	Seismic event	None required	None Required	None required	AC: Emergency Preparedness	Controls based on Original BIO Accident Analysis
25X	RCSTS-09-INTEG17	Release of radioactive aerosols to the atmosphere caused by spray leak of supernate from vent station due to piping system leak.	Seismic event	None required	None Required	None required	AC: Emergency Preparedness	Controls based on Original BIO Accident Analysis
25X	RCSTS-10/11-INTEG06	Release of radioactive supernate to the soil from the underground piping between the diversion box and the vent station due to piping system leak.	Failure of primary and encasement piping due to seismic event	None required	None Required	None required	AC: Emergency Preparedness	Controls based on Original BIO Accident Analysis
25X	RCSTS-12/13-INTEG06	Release of radioactive supernate to the soil from the underground piping between the vent station and the 244-A Lift Station due to piping system leak.	Failure of primary and encasement piping due to seismic event	None required	None Required	None required	AC: Emergency Preparedness	Controls based on Original BIO Accident Analysis

Table D-1. Safety SSCs and TSRs For Potential S3 and S2 Consequences. (63 sheets)

BIO Acc	ID	Hazardous Conditions	Cause	Prev SSC	Prev TSR	Mit SSC	Mit TSR	Control MEMO
25X	RCSTS-15/16-INTEG04	Release of radioactive slurry to the soil surface from the underground piping between the SY-A or SY-B valve pit and the diversion box due to piping system leak.	Failure of primary and encasement piping due to seismic event	None required	None Required	None required	AC: Emergency Preparedness	Controls based on Original BIO Accident Analysis
25X	RCSTS-18/19-INTEG07	Release of radioactive slurry to the soil from the underground piping between the diversion box and the vent station due to piping system leak.	Failure of primary and encasement piping due to seismic event	None required	None Required	None required	AC: Emergency Preparedness	Controls based on Original BIO Accident Analysis
25X	RCSTS-24-INTEG04	Release of radioactive slurry to soil surface from overflow of lift station due to piping system leak.	Seismic event	None required	None Required	None required	AC: Emergency Preparedness	Controls based on Original BIO Accident Analysis
25X	RCSTS-24-INTEG05	Release of radioactive supernate to soil surface from overflow of 244-A Lift Station due to piping system leak.	Seismic event	None required	None Required	None required	AC: Emergency Preparedness	Controls based on Original BIO Accident Analysis
25X	RCSTS-24-INTEG09	Release of radioactive aerosols to the atmosphere caused by spray leak of slurry from lift station due to piping system leak.	Seismic event	None required	None Required	None required	AC: Emergency Preparedness	Controls based on Original BIO Accident Analysis
25X	RCSTS-24-INTEG10	Release of radioactive aerosols to the atmosphere caused by spray leak of supernate from lift station due to piping system leak.	Seismic event	None required	None Required	None required	AC: Emergency Preparedness	Controls based on Original BIO Accident Analysis

This page intentionally left blank.

Table D-2. Safety SSCs and TSRs For Potential S1 Consequences with F3 Frequency. (7 sheets)

ID	Hazardous Conditions	Cause	Prev SSC	Prev TSR	Mit SSC	Mit TSR	Control MEMO
RCSTS-01-FLOW01	Release of radioactive slurry or supernate to the soil surface from overflow of the 244-S catch station due to reverse flow.	Reverse flow to 244-S catch station caused by improper valve lineup.	SC: Backflow Prevention Sys SS: Trans Sys Covers	AC: 5.12M Trans Cntrls: - Config Management - Route Verification AC: 5.20 Trans Pump admin lock cntrls LCO: 3.1.1M Trans Sys Cover/Entry Doors AC: 5.22M Trans Sys cover removal/entry door closure cntrls	None Required	AC: 5.14 Emerg Prep	Facility worker exposure controlled by Health & Safety Plan
RCSTS-03-FLOW01	Release of radioactive slurry or supernate to the SY flush pit from transfer line due to backflow.	Reverse flow to flush pit caused by improper valving sequence	SC: Backflow Prevention Sys	AC: 5.12M Trans Cntrls: - Config Management - Route Verification	SS: Trans Sys Covers SC: Trans Leak Detec Syss	LCO: 3.1.1M Trans Sys Cover/Entry Doors LCO: 3.1.3M Trans Leak Detect Syss AC: 5.12M Trans Cntrls AC: 5.14 Emerg Prep AC: 5.22M Trans Sys cover removal/entry door closure cntrls	All of the Controls identified would prevent the worker from being exposed to radiation above the site standards. Facility worker exposure controlled by Health & Safety Plan
RCSTS-03-PRES01	Release of radioactive material to atmosphere from SY valve pit due to over-pressurization event in Tank 241-SY-102.	Pressure event in Tank 241-SY-102 with loss of valve pit seal loop water	SC: DST/AWF Ventilation	LCO: DST and AWF Tank Vent Syss	SC: Trans Sys Covers	LCO: Trans Sys Covers AC: Trans Sys Cover Removal Cntrls	All of the Controls identified would help prevent the worker from being exposed to the waste. Facility worker exposure controlled by Health & Safety Plan Controls taken from the TWRS BIO

Table D-2. Safety SSCs and TSRs For Potential S1 Consequences with F3 Frequency. (7 sheets)

ID	Hazardous Conditions	Cause	Prev SSC	Prev TSR	Mit SSC	Mit TSR	Control MEMO
RCSTS-08-AIR01	Release of radioactive vapors to the diversion box atmosphere from accumulated waste in diversion box due to pipe encasement draining.	Draining of the encasement	SC: Entry Doors SC: Diversion Box Struct SS: Trans Leak Detect Sys SS: Emergency Pumpout Line SS: Air Sample Line SS: Exhauster Hookup SS: Inlet Air HEPA Filter Sys	LCO: 3.1.1M Trans Sys Cover/Entry Doors LCO: 3.1.3M Trans Leak Detect Syss LCO: 3.1M HEPA Filter AC: 5.18M HEPA Filter Cntrls AC: 5.22M Trans Sys cover removal/entry door closure cntrls	None Required	AC: 5.14 Emerg Prep	All of the Controls identified would help prevent the worker from being exposed to the waste coming from the encasement piping. Facility worker exposure controlled by Health & Safety Plan
RCSTS-08-AIR02	Exposure to chemical vapors and liquids in diversion box due to the spill or leak of chemicals in confined space.	Chemicals brought in for decontamination and maintenance	None Required	None Required	None Required	AC: 5.14 Emerg Prep	No applicable SSCs or TSRs - Facility worker exposure controlled by Health & Safety Plan
RCSTS-08-AIR03	Release of radioactive vapors to the diversion box atmosphere due to waste being present in box.	Leak of waste solution	SC: Entry Doors SC: Diversion Box Struct SS: Trans Leak Detect Sys SS: Emergency Pumpout Line SS: Air Sample Line SS: Exhauster Hookup SS: HEPA Filter Sys	LCO: 3.1.1M Trans Sys Cover/Entry Dogrs LCO: 3.1.3M Trans Leak Detect Syss LCO: 3.1M Inlet Air HEPA Filter AC: 5.12M Trans Contrls: AC: 5.18M HEPA Filter Cntrls AC: 5.22M Trans Sys cover removal/entry door closure cntrls	None Required	AC: 5.14 Emerg Prep	All of the Controls identified would prevent the worker from being exposed to radiation above site standards. Facility worker exposure to injury controlled by Health & Safety Plan

Table D-2. Safety SSCs and TSRs For Potential S1 Consequences with F3 Frequency. (7 sheets)

ID	Hazardous Conditions	Cause	Prev SSC	Prev TSR	Mit SSC	Mit TSR	Control MEMO
RCSTS-08-AIR04	Release of chemical waste into diversion box from leak of waste solution resulting in worker exposure.	Leak of waste solution	None Required	None Required	SC: Entry Doors SC: Diversion Box Struct SS: Air Sample Line SS: Exhauster Hookup SS: HEPA Filter Sys	LCO: 3.1.1M Trans Sys Cover/Entry Doors LCO: 3.1M Inlet Air HEPA Filter AC: 5.14 Emerg Prep AC: 5.22M Trans Sys cover removal/entry door closure cntrls	Facility worker exposure controlled by Health & Safety Plan
RCSTS-08-OCC01	Worker injury due to welding gas bottle becoming a missile in diversion box.	Damage from welding gas bottle during maintenance activity in diversion box	None Required	None Required	None Required	None Required	No Applicable SSCs or TSRs - Controlled by Health & Safety Plan
RCSTS-08-OCC02	Worker discomfort from cold temperatures in diversion box.	Running an exhauster during cold weather	None Required	None Required	None Required	None Required	No Applicable SSCs or TSRs - Controlled by Health & Safety Plan
RCSTS-08-RAD01	Release of radioactive material to the diversion box from transfer piping due to encasement draining.	Draining of the encasement	SC: Entry Doors SC: Diversion Box Struct SS: Trans Leak Detect Sys SS: Emergency Pumpout Line SS: Air Sample Line SS: Exhauster Hookup SS: HEPA Filter Sys	LCO: 3.1.1M Trans Sys Cover/Entry Doors LCO: 3.1.3M Trans Leak Detect Syss LCO: 3.1M Inlet Air HEPA Filter AC: 5.12M Trans Cntrls AC: 5.18M HEPA Filter Cntrls AC: 5.22M Trans Sys cover removal/entry door closure cntrls	None Required	AC: 5.14 Emerg Prep	All of the Controls identified would prevent the worker from being exposed to radiation above the site standards. Facility worker exposure controlled by Health & Safety Plan

Table D-2. Safety SSCs and TSRs For Potential S1 Consequences with F3 Frequency. (7 sheets)

ID	Hazardous Conditions	Cause	Prev SSC	Prev TSR	Mit SSC	Mit TSR	Control MEMO
RCSTS-08-RAD03	High radiation dose to worker from the diversion box due to the presence of residual radioactive contamination.	Holdup of radionuclides due to trapped radioactive material in pumps or pipes	SC: Entry Doors SC: Diversion Box Struct	LCO: 3.1.1M Trans Sys Cover/Entry Doors AC: 5.22M Trans Sys cover removal/entry door closure cntrls	None Required	None Required	All of the Controls identified would prevent the worker from being exposed to radiation above the site standards. Facility worker exposure controlled by Health & Safety Plan
RCSTS-09-AIR02	Release of radioactive vapors to the vent station atmosphere due to waste being present in station.	Leak of waste solution	SC: Entry Doors SC: Vent Station Struct SS: Trans Leak Detect Sys SS: Emergency Pumpout Line SS: Air Sample Line SS: Exhauster Hookup SS: Inlet Air HEPA Filter Sys (6241-A and 6241-V)	AC: 5.12M Trans Cntrls: LCO: 3.1.1M Trans Sys Cover/Entry Doors LCO: 3.1.3M Trans Leak Detect Syss AC: 5.22M Trans Sys cover removal/entry door closure cntrls	None Required	AC: 5.14 Emerg Prep	All of the Controls identified would prevent the worker from being exposed to radiation above the site standards. Facility worker exposure controlled by Health & Safety Plan
RCSTS-09-AIR03	Exposure to chemical vapors and liquids in vent station due to the spill or leak of chemicals.	Chemicals brought in for decontamination and maintenance	None Required	None Required	SC: Entry Doors SC: Vent Station Struct SS: Air Sample Line SS: Exhauster Hookup SS: HEPA Filter Sys	LCO: 3.1.1M Trans Sys Cover/Entry Doors LCO: 3.1M Inlet Air HEPA Filter AC: 5.14 Emerg Prep AC: 5.22M Trans Sys cover removal/entry door closure cntrls AC: 5.18M HEPA Filter Cntrls	Facility worker exposure controlled by Health & Safety Plan

Table D-2. Safety SSCs and TSRs For Potential S1 Consequences with F3 Frequency. (7 sheets)

ID	Hazardous Conditions	Cause	Prev SSC	Prev TSR	Mit SSC	Mit TSR	Control MEMO
RCSTS-09-AIR04	Release of chemical waste into diversion box from leak of waste solution resulting in worker exposure.	Leak of waste solution	None Required	None Required	SC: Entry Doors SC: Diversion BoxStruct SS: Air Sample Line SS: Exhauster Hookup SS: HEPA Filter Sys	LCO: 3.1.1M Trans Sys Cover/Entry Doors LCO: 3.1M Inlet Air HEPA Filter AC: 5.14 Emerg Prep AC: 5.22M Trans Sys cover removal/entry door closure cntrls AC: 5.18M HEPA Filter Cntrls	Facility worker exposure controlled by Health & Safety Plan
RCSTS-09-OCC01	Worker injury due to welding gas bottle becoming a missile in vent station.	Damage from welding gas bottle during maintenance activity in vent station	None Required	None Required	None Required	None Required	No Applicable SSCs or TSRs - Controlled by Health & Safety Plan
RCSTS-09-OCC02	Worker discomfort from cold temperatures in vent station.	Running an exhauster during cold weather	None Required	None Required	None Required	None Required	No Applicable SSCs or TSRs - Controlled by Health & Safety Plan
RCSTS-09-RAD03	High radiation dose to worker from the vent station due to the presence of residual radioactive contamination.	Holdup of radionuclides due to trapped radioactive material in pipes	SC: Entry Doors SC: Vent Station Struct	LCO: 3.1.1M Trans Sys Cover/Entry Doors LCO: 3.1.3M Trans Leak Detect Syss AC: 5.22M Trans Sys cover removal/entry door closure cntrls	None Required	AC: 5.14 Emerg Prep	All of the Controls identified would prevent the worker from being exposed to radiation above the site standards. Facility worker exposure controlled by Health & Safety Plan
RCSTS-1FS-LEVEL01	Release of caustic solution to the sump pit from the water flush tank due to over filling of tank.	Operator error - overfill of caustic material	None Required	None Required	None Required	None Required	Facility worker exposure controlled by Health & Safety Plan

Table D-2. Safety SSCs and TSRs For Potential S1 Consequences with F3 Frequency. (7 sheets)

ID	Hazardous Conditions	Cause	Prev SSC	Prev TSR	Mit SSC	Mit TSR	Control MEMO
RCSTS-1FS-LEVEL02	Release of caustic solution and radionuclides to the sump pit from the water flush tank due to over filling of tank.	Flush tank receives radioactive waste from transfer line during drainback process. Jumper block valves and raw water block valves opened during the drainback of waste from vent station of the cross site transfer line.	SC: Press Switch Interlocks/Alarms (water flush jumper) SC: Backflow Prevention Sys (water flush jumper)	AC: 5.12M Trans Cntrls: - Config Management - Route Verification	None Required	AC: 5.14 Emerg Prep	All of the Controls identified would help prevent the worker from being exposed to the waste. Facility worker exposure controlled by Health & Safety Plan
RCSTS-1FS-LEVEL04	Release of caustic solution to the sump pit from the water flush tank due to human error.	Human error - drain valve left open	None Required	None Required	None Required	None Required	Facility worker exposure controlled by Health & Safety Plan
RCSTS-4FS-FLOW02	Release of caustic material to caustic storage area from caustic drum due to handling error.	Materials handling accident	None Required	None Required	None Required	None Required	Facility worker exposure controlled by Health & Safety Plan
RCSTS-5FS-FLOW03	Release of radioactive material into water flush tank due to loss of flush system pump operation.	Loss of pump pressure during flush operation causing back flow of waste	SC: Press Switch Interlocks/Alarms (water flush jumper) SC: Backflow Prevention Sys (water flush jumper)	AC: 5.12M Trans Cntrls: - Config Management - Route Verification	None Required	AC: 5.14 Emerg Prep	All of the Controls identified would prevent the worker from being exposed to radiation above the site standards. Facility worker exposure controlled by Health & Safety Plan

Table D-2. Safety SSCs and TSRs For Potential S1 Consequences with F3 Frequency. (7 sheets)

ID	Hazardous Conditions	Cause	Prev SSC	Prev TSR	Mit SSC	Mit TSR	Control MEMO
RCSTS-GENERAL-PRES	Release of radioactive material to the soil surface from supernate or slurry piping due to encasement breach (pipe is considered empty except for residual contamination).	Pneumatic leak testing	SC: Transfer Piping SC: Encasement Piping	None Required	None Required	AC: 5.14 Emerg Prep	All of the Controls identified would help prevent the worker from being exposed to the waste coming from the encasement piping. Facility worker exposure and injury controlled by Health & Safety Plan

This page intentionally left blank.

Table D-3. Safety SSCs and TSRs for Potentially Severe (E3 and E2) Environmental Consequences. (53 sheets)

ID	Hazardous Conditions	Cause	Prev SSC	Prev TSR	Mit SSC	Mit TSR	Control MEMO
RCSTS-01-FLOW02	Release of radioactive aerosols and entrained solids to the atmosphere from Tank 241-SY-012 due to criticality.	Mistransfer of material containing organic extractant from east area via the supernate piping route	None required	AC: 5.1 Nuclear Criticality Safety: - Establish CPSs - Transfer limits on pH, neutron absorber to plutonium ratio and plutonium concentration - Criticality training program - CSERs for cross-site slurry transfers	None required	None Required	Controls based on Reanalyzed Accident for W058 Project
RCSTS-01-FLOW03	Release of radioactive supernate to the soil surface from overflow of Tank 241-SY-102 due to mistransfer.	Mistransfer of material from east area via the supernate piping route.	SC: Trans Leak Detect Syss	AC: 5.12M Trans Cntrls: - Double valve isolation on intercon lines - Config Management - Route Verification - Caps/blanks on open nozzles AC: 5.20 Trans Pump admin lock cntrls LCO: 3.1.3M Trans Leak Detect Syss	SS: Tank Level Detect Syss SC: Trans Leak Detect Syss	AC: 5.12M Trans Cntrls: - Material Balance AC: 5.13 Encasement Seal Loop Cntrls AC: 5.14 Emerg Prep LCO: 3.1.3M Trans Leak Detect Syss	Controls based on Reanalyzed Accident for W058 Project
RCSTS-01-FLOW04	Release of radioactive aerosols/entrained solids and/or toxic gases to the atmosphere from Tank 241-SY due to chemical reaction.	Mistransfer of incompatible material from east area via the supernate piping route.	None required	AC: 5.12 Transfer Controls: - Compat eval for pH 11	SS: HEPA filters	AC: 5.6 HEPA Filter controls: - Aerosol test upon install - Periodic aerosol test	Controls based on Original BIO Accident Analysis
RCSTS-01-FLOW05	Release of ammonia to atmosphere from a fire or a gas release resulting in an explosion due to addition of inadequately diluted caustic.	Human error	None required	None required	None required	None required	Controls based on Original BIO Accident Analysis

Table D-3. Safety SSCs and TSRs for Potentially Severe (E3 and E2) Environmental Consequences. (53 sheets)

ID	Hazardous Conditions	Cause	Prev SSC	Prev TSR	Mit SSC	Mit TSR	Control MEMO
RCSTS-03-FLOW/INTEG01	Release of radioactive slurry to the soil surface from overflow in the SY-A or SY-B valve pit due to piping system leak (pool).	Failure of jumper due to misalignment (human error).	SC: Trans Leak Detect Syss	AC: 5.12M Trans Cntrls: - Jumper Leak Testing LCO: 3.1.3M Trans Leak Detect Syss	SS: Trans Sys Covers SS: Tank Level Detect Syss SC: Trans Leak Detect Sys	LCO: 3.1.1M Trans Sys Cover AC: 5.12M Trans Cntrls: - Material Balance - Pit floor drains open AC: 5.14 Emerg Prep AC: 5.22M Trans Sys cover removal LCO: 3.1.3M Trans Leak Detect Syss	Controls based on Reanalyzed Accident for W058 Project
RCSTS-03-FLOW/INTEG02a	Release of radioactive supernate to the soil surface from overflow in the SY-A or SY-B valve pit due to piping system leak (pool).	Failure of jumper due to misalignment (human error)	SC: Trans Leak Detect Syss	AC: 5.12M Trans Cntrls: - Jumper Leak Testing LCO: 3.1.3M Trans Leak Detect Syss	SS: Trans Sys Covers SS: Tank Level Detect Syss SC: Trans Leak Detect Sys	LCO: 3.1.1M Trans Sys Cover AC: 5.12M Trans Cntrls: - Material Balance - Pit floor drains open AC: 5.14 Emerg Prep AC: 5.22M Trans Sys cover removal LCO: 3.1.3M Trans Leak Detect Syss	Controls based on Reanalyzed Accident for W058 Project
RCSTS-03-FLOW/INTEG02b	Release of radioactive supernate to the soil surface from overflow in the SY-A or SY-B valve pit due to piping system leak (pool).	Failure of jumper due to gasket failure	SC: Trans Leak Detect Syss	AC: 5.12M Trans Cntrls: - Jumper Leak Testing LCO: 3.1.3M Trans Leak Detect Syss	SS: Tank Level Detect Syss SS: Trans Sys Covers SC: Trans Leak Detect Syss	LCO: 3.1.1M Trans Sys Cover AC: 5.12M Trans Cntrls: - Material Balance - Pit floor drains open AC: 5.22M Trans Sys cover removal LCO: 3.1.3M Trans Leak Detect Syss AC: 5.14 Emerg Prep	Controls based on Reanalyzed Accident for W058 Project

Table D-3. Safety SSCs and TSRs for Potentially Severe (E3 and E2) Environmental Consequences. (53 sheets)

ID	Hazardous Conditions	Cause	Prev SSC	Prev TSR	Mit SSC	Mit TSR	Control MEMO
RCSTS-03-FLOW/INTEG02c	Release of radioactive supernate to the soil surface from overflow in the SY-A or SY-B valve pit due to piping system leak (pool).	Failure of jumper due to corrosion	SC: Trans Leak Detect Syss	AC: 5.12M Trans Cntrls: - Jumper Leak Testing LCO: 3.1.3M Trans Leak Detect Syss	SS: Tank Level Detect Syss SS: Trans Sys Covers SC: Trans Leak Detect Syss	LCO: 3.1.1M Trans Sys Cover AC: 5.12M Trans Cntrls: - Material Balance - Pit floor drains open AC: 5.22M Trans Sys cover removal LCO: 3.1.3M Trans Leak Detect Syss AC: 5.14 Emerg Prep	Controls based on Reanalyzed Accident for W058 Project
RCSTS-03-FLOW/INTEG03a	Release of radioactive slurry aerosols to the atmosphere caused by spray leak of slurry from the SY-A or SY-B valve pit due to piping system leak.	Failure of jumper due to misalignment (human error)	None Required	AC: 5.12M Trans Cntrls: - Jumper Leak Testing AC: 5.12M Trans Cntrls: - Route verification	SC: Trans Sys Covers	LCO: 3.1.1M Trans Sys Cover AC: 5.14 Emerg Prep AC: 5.22M Trans Sys cover removal	Controls based on Reanalyzed Accident for W058 Project
RCSTS-03-FLOW/INTEG03b	Release of radioactive slurry aerosols to the atmosphere caused by spray leak of slurry from the SY-A or SY-B valve pit due to piping system leak.	Failure of jumper due to gasket failure	None Required	AC: 5.12M Trans Cntrls: - Jumper Leak Testing	SS: Trans Sys Covers	LCO: 3.1.1M Trans Sys Cover AC: 5.22M Trans Sys cover removal AC: 5.14 Emerg Prep	Controls based on Reanalyzed Accident for W058 Project
RCSTS-03-FLOW/INTEG03c	Release of radioactive slurry aerosols to the atmosphere caused by spray leak of slurry from the SY-A or SY-B valve pit due to piping system leak.	Failure of jumper due to corrosion	None Required	AC: 5.12M Trans Cntrls: - Jumper Leak Testing	SS: Trans Sys Covers	LCO: 3.1.1M Trans Sys Cover AC: 5.22M Trans Sys cover removal AC: 5.14 Emerg Prep	Controls based on Reanalyzed Accident for W058 Project
RCSTS-03-FLOW/INTEG04a	Release of radioactive supernate aerosols to the atmosphere caused by spray leak of supernate from the SY-A or SY-B valve pit due to piping system leak.	Failure of jumper due to misalignment (human error)	None Required	AC: 5.12M Trans Cntrls: - Jumper Leak Testing AC: 5.12M Trans Cntrls: - Independent route verification	SC: Trans Sys Covers	LCO: 3.1.1M Trans Sys Cover AC: 5.14 Emerg Prep AC: 5.22M Trans Sys cover removal	Controls based on Reanalyzed Accident for W058 Project

Table D-3. Safety SSCs and TSRs for Potentially Severe (E3 and E2) Environmental Consequences. (53 sheets)

ID	Hazardous Conditions	Cause	Prev SSC	Prev TSR	Mit SSC	Mit TSR	Control MEMO
RCSTS-03-FLOW/INTEG04b	Release of radioactive supernate aerosols to the atmosphere caused by spray leak of supernate from the SY-A or SY-B valve pit due to piping system leak.	Failure of jumper due to gasket failure	None Required	AC: 5.12M Trans Cntrls: - Jumper Leak Testing	SS: Trans Sys Covers	LCO: 3.1.1M Trans Sys Cover AC: 5.22M Trans Sys cover removal AC: 5.14 Emerg Prep	Controls based on Reanalyzed Accident for W058 Project
RCSTS-03-FLOW/INTEG04c	Release of radioactive supernate aerosols to the atmosphere caused by spray leak of supernate from the SY-A or SY-B valve pit due to piping system leak.	Failure of jumper due to corrosion	None Required	AC: 5.12M Trans Cntrls: - Jumper Leak Testing	SS: Trans Sys Covers	LCO: 3.1.1M Trans Sys Cover AC: 5.22M Trans Sys cover removal AC: 5.14 Emerg Prep	Controls based on Reanalyzed Accident for W058 Project
RCSTS-03-FLOW02	Release of radioactive slurry to the soil surface from overflow in the SY-A or SY-B valve pit due to piping system leak (pool).	Computer failure or human error causing misrouting of material when flow path is not completely connected	SC: Trans Leak Detect Syss	AC: 5.12M Trans Cntrls: - Double valve isolation on intercon lines - Config Management - Route Verification - Caps/blanks on open nozzles AC: 5.20 Trans Pump admin lock cntrls LCO: 3.1.3M Trans Leak Detect Syss	SS: Trans Sys Covers SS: Tank Level Detect Syss SC: Trans Leak Detect Syss	LCO: 3.1.1M Trans Sys Cover AC: 5.12M Trans Cntrls: - Material Balance - Pit floor drains open AC: 5.13 Encasement Seal Loop Cntrls AC: 5.14 Emerg Prep AC: 5.22M Trans Sys cover removal LCO: 3.1.3M Trans Leak Detect Syss	Controls based on Reanalyzed Accident for W058 Project

Table D-3. Safety SSCs and TSRs for Potentially Severe (E3 and E2) Environmental Consequences. (53 sheets)

ID	Hazardous Conditions	Cause	Prev SSC	Prev TSR	Mit SSC	Mit TSR	Control MEMO
RCSTS-03-FLOW03	Release of radioactive slurry to the soil surface from overflow in the SY-A or SY-B valve pit due to piping system leak (pool).	External leak of valve or valves to the valve pit	SC: Trans Leak Detect Syss	LCO: 3.1.3M Trans Leak Detect Syss	SS: Tank Level Detect Syss SS: Trans Sys Covers SC: Trans Leak Detect Syss	LCO: 3.1.1M Trans Sys Cover AC: 5.12M Trans Contrls: - Material Balance - Pit floor drains open AC: 5.14 Emerg Prep AC: 5.22M Trans Sys cover removal LCO: 3.1.3M Trans Leak Detect Syss	Controls based on Reanalyzed Accident for W058 Project
RCSTS-03-FLOW04	Release of radioactive supernate to the soil surface from overflow in the SY-A or SY-B valve pit due to piping system leak (pool).	Computer failure or human error causing misrouting of material when flow path is not completely connected	SC: Trans Leak Detect Syss	AC: 5.12M Trans Cntrls: - Double valve isolation on intercon lines - Config Management - Route Verification - Caps/blanks on open nozzles AC: 5.20 Trans Pump admin lock cntrls LCO: 3.1.3M Trans Leak Detect Syss	SS: Trans Sys Covers SS: Tank Level Detect Syss SC: Trans Leak Detect Syss	LCO: 3.1.1M Trans Sys Cover AC: 5.12M Trans Contrls: - Material Balance - Pit floor drains open AC: 5.13 Encasement Seal Loop Cntrls AC: 5.14 Emerg Prep AC: 5.22M Trans Sys cover removal LCO: 3.1.3M Trans Leak Detect Syss	Controls based on Reanalyzed Accident for W058 Project

Table D-3. Safety SSCs and TSRs for Potentially Severe (E3 and E2) Environmental Consequences. (53 sheets)

ID	Hazardous Conditions	Cause	Prev SSC	Prev TSR	Mit SSC	Mit TSR	Control MEMO
RCSTS-03-FLOW05	Release of radioactive supernate to the soil surface from overflow in the SY-A or SY-B valve pit due to piping system leak (pool).	External leak of valve or valves to the valve pit	SC: Trans Leak Detect Syss	LCO: 3.1.3M Trans Leak Detect Syss	SS: Tank Level Detect Syss SS: Trans Sys Covers SC: Trans Leak Detect Syss	LCO: 3.1.1M Trans Sys Cover AC: 5.12M Trans Cntrls: - Material Balance - Pit floor drains open AC: 5.14 Emerg Prep AC: 5.22M Trans Sys cover removal LCO: 3.1.3M Trans Leak Detect Syss	Controls based on Reanalyzed Accident for W058 Project
RCSTS-03-FLOW06	Release of radioactive slurry aerosols to the atmosphere caused by spray leak of slurry from the SY-A or SY-B valve pit due to piping system leak.	Computer failure or human error causing misrouting of material when flow path is not completely connected	None Required	AC: 5.12M Trans Cntrls: - Double valve isolation on intercon lines - Config Management - Route Verification - Caps/blanks on open nozzles AC: 5.20 Trans Pump admin lock cntrls	SS: Trans Sys Covers	LCO: 3.1.1M Trans Sys Cover AC: 5.14 Emerg Prep AC: 5.22M Trans Sys cover removal	Controls based on Reanalyzed Accident for W058 Project
RCSTS-03-FLOW07	Release of radioactive slurry aerosols to the atmosphere caused by spray leak of slurry from the SY-A or SY-B valve pit due to piping system leak.	External leak of valve or valves to the valve pit	None Required	None Required	SS: Trans Sys Covers	LCO: 3.1.1M Trans Sys Cover AC: 5.14 Emerg Prep AC: 5.22M Trans Sys cover removal	Controls based on Reanalyzed Accident for W058 Project
RCSTS-03-FLOW08	Release of radioactive supernate aerosols to the atmosphere caused by spray leak of supernate from the SY-A or SY-B valve pit due to piping system leak.	Computer failure or human error causing misrouting of material when flow path is not completely connected	None Required	AC: 5.12M Trans Cntrls: - Double valve isolation on intercon lines - Config Management - Route Verification - Caps/blanks on open nozzles AC: 5.20 Trans Pump admin lock cntrls	SS: Trans Sys Covers	LCO: 3.1.1M Trans Sys Cover AC: 5.14 Emerg Prep AC: 5.22M Trans Sys cover removal	Controls based on Reanalyzed Accident for W058 Project

Table D-3. Safety SSCs and TSRs for Potentially Severe (E3 and E2) Environmental Consequences. (53 sheets)

ID	Hazardous Conditions	Cause	Prev SSC	Prev TSR	Mit SSC	Mit TSR	Control MEMO
RCSTS-03-INTEG01	Release of radioactive aerosols to the atmosphere from the SY valve pit due to fire or explosion of flammable gas.	Fire or explosion in the valve pit caused by buildup of flammable gas because of spill of supernate or slurry	None required	AC: Ign Cntrls - Cntrls sparking - Cntrls electrostatic ign sources - Polymer material cntrls - Surface temp for equip contact waste - NFPA 70 Class 1 Div 1 & 2 requirements - Purged and pres equip cntrls AC: 5.11 Flam Gas Mon Cntrl	None Required	AC: 5.14 Emerg Prep	Controls based on Original BIO Accident Analysis
RCSTS-03-INTEG02	Release of radioactive aerosols to the atmosphere from the SY valve pit due to fire or explosion of flammable gas.	Fire or explosion due to leakage of flammable gas due to pipe breach in slurry line caused by gas release from slurry	None required	AC: Ign Cntrls - Cntrls sparking - Cntrls electrostatic ign sources - Polymer material cntrls - Surface temp for equip contact waste - NFPA 70 Class 1 Div 1 & 2 requirements - Purged and pres equip cntrls AC: 5.11 Flam Gas Mon Cntrl	None Required	AC: 5.14 Emerg Prep	Controls based on Original BIO Accident Analysis
RCSTS-03-INTEG03	Release of radioactive supernate aerosols to the atmosphere caused by spray leak of supernate from the SY-A or SY-B valve pit due to piping system leak.	External leak of valve or valves to the valve pit	None Required	None Required	SS: Trans Sys Covers	LCO: 3.1.1M Trans Sys Cover AC: 5.14 Emerg Prep AC: 5.22M Trans Sys cover removal	Controls based on Reanalyzed Accident for W058 Project
RCSTS-03-INTEG04	Release of radioactive supernate aerosols to the atmosphere caused by spray leak of supernate from the SY-A or SY-B valve pit due to piping system leak.	Seismic event	None required	None Required	None required	AC: Emergency Preparedness	Controls based on Original BIO Accident Analysis

Table D-3. Safety SSCs and TSRs for Potentially Severe (E3 and E2) Environmental Consequences. (53 sheets)

ID	Hazardous Conditions	Cause	Prev SSC	Prev TSR	Mit SSC	Mit TSR	Control MEMO
RCSTS-03-INTEG05	Release of radioactive slurry to the soil surface from overflow in the SY-A or SY-B valve pit due to piping system leak.	External event (airplane crash, etc)	None Required	None Required	None Required	AC: 5.14 Emerg Prep	No controls required based on the TWRS BIO
RCSTS-03-INTEG06	Release of radioactive slurry to the soil surface from overflow in the SY-A or SY-B valve pit due to piping system leak.	Seismic event	None required	None Required	None required	AC: Emergency Preparedness	Controls based on Original BIO Accident Analysis
RCSTS-03-INTEG07	Release of radioactive supernate to the soil surface from overflow in the SY-A or SY-B valve pit due to piping system leak.	External event (airplane crash, etc)	None Required	None Required	None Required	AC: 5.14 Emerg Prep	No controls required based on the TWRS BIO
RCSTS-03-INTEG08	Release of radioactive supernate to the soil surface from overflow in the SY-A or SY-B valve pit due to piping system leak (pool).	Seismic event	None required	None Required	None required	AC: Emergency Preparedness	Controls based on Original BIO Accident Analysis
RCSTS-03-INTEG09	Release of radioactive slurry aerosols to the atmosphere caused by spray leak of slurry from the SY-A or SY-B valve pit due to piping system leak.	External event (airplane crash, etc)	None Required	None Required	None Required	AC: 5.14 Emerg Prep	No controls required based on the TWRS BIO
RCSTS-03-INTEG10	Release of radioactive slurry aerosols to the atmosphere caused by spray leak of slurry from the SY-A or SY-B valve pit due to piping system leak.	Seismic event	None required	None Required	None required	AC: Emergency Preparedness	Controls based on Original BIO Accident Analysis
RCSTS-03-INTEG11	Release of radioactive supernate aerosols to the atmosphere caused by spray leak of supernate from the SY-A or SY-B valve pit due to piping system leak.	External event (airplane crash, etc)	None Required	None Required	None Required	AC: 5.14 Emerg Prep	No controls required based on the TWRS BIO

Table D-3. Safety SSCs and TSRs for Potentially Severe (E3 and E2) Environmental Consequences. (53 sheets)

ID	Hazardous Conditions	Cause	Prev SSC	Prev TSR	Mit SSC	Mit TSR	Control MEMO
RCSTS-03-PRES02	Release of radioactive slurry to the soil surface from overflow in the SY-A or SY-B valve pit due to piping system leak (pool).	Water hammer	SC: Trans Leak Detect Syss	AC: 5.12M Trans Cntrls: - Config Management - Route Verification LCO: 3.1.3M Trans Leak Detect Syss	SS: Tank Level Detect Syss SS: Trans Sys Covers SC: Trans Leak Detect Syss	LCO: 3.1.1M Trans Sys Cover AC: 5.12M Trans Cntrls: - Material Balance - Pit floor drains open AC: 5.22M Trans Sys cover removal LCO: 3.1.3M Trans Leak Detect Syss AC: 5.14 Emerg Prep	Controls based on Reanalyzed Accident for W058 Project
RCSTS-03-PRES03	Release of radioactive supernate to the soil surface from overflow in the SY-A or SY-B valve pit due to piping system leak (pool).	Water hammer	SC: Trans Leak Detect Syss	AC: 5.12M Trans Cntrls: - Config Management - Route Verification LCO: 3.1.3M Trans Leak Detect Syss	SS: Tank Level Detect Syss SS: Trans Sys Covers SC: Trans Leak Detect Syss	LCO: 3.1.1M Trans Sys Cover AC: 5.12M Trans Cntrls: - Material Balance - Pit floor drains open AC: 5.22M Trans Sys cover removal LCO: 3.1.3M Trans Leak Detect Syss AC: 5.14 Emerg Prep	Controls based on Reanalyzed Accident for W058 Project
RCSTS-04/05-INTEG01a	Release of radioactive supernate to the soil surface from the underground piping between the SY-A or SY-B valve pit and a diversion box due to piping system leak.	Failure of primary and encasement piping due to corrosion	SC: Transfer Piping SC: Pipe Encasement	None Required	SS: Trans Leak Detect Sys SS: Tank Level Detection Syss	AC: 5.12M Transr Cntrls: - Material balance AC: 5.14 Emerg Prep LCO: 3.1.3M Trans Leak Detect Syss	Controls based on Reanalyzed Accident for W058 Project
RCSTS-04/05-INTEG01b	Release of radioactive supernate to the soil surface from the underground piping between the SY-A or SY-B valve pit and a diversion box due to piping system leak.	Failure of primary and encasement piping due to unrecognized material flaw	SC: Transfer Piping SC: Pipe Encasement	None	SC: Trans Leak Detect Syss SS: Tank Level Detection Syss	AC: 5.12M Transr Cntrls: - Material balance AC: 5.14 Emerg Prep LCO: 3.1.3M Trans Leak Detect Syss	Controls based on Reanalyzed Accident for W058 Project

Table D-3. Safety SSCs and TSRs for Potentially Severe (E3 and E2) Environmental Consequences. (53 sheets)

ID	Hazardous Conditions	Cause	Prev SSC	Prev TSR	Mit SSC	Mit TSR	Control MEMO
RCSTS-04/05-INTEG02	Release of radioactive supernate to the soil surface from the underground piping between the SY-A or SY-B valve pit and a diversion box due to piping system leak.	Failure of primary and encasement piping due to external event (airplane crash, volcanism, etc)	None Required	None Required	None Required	AC: 5.14 Emerg Prep	No controls required based on the TWRS BIO
RCSTS-04/05-INTEG03	Release of radioactive supernate to the soil surface from the underground piping between the SY-A or SY-B valve pit and the diversion box due to piping system leak.	Failure of primary and encasement piping due to external event (excavation accident)	SC: Transfer Piping SC: Pipe Encasement	AC: 5.17 Excavation Controls	SS: Trans Leak Detection Sys SS: Tank Level Detection Syss	LCO: 3.1.3M Trans Leak Detect Syss AC: 5.12M Transr Cntrls: - Material balance AC: 5.14 Emerg Prep	Controls based on Reanalyzed Accident for W058 Project
RCSTS-04/05-INTEG04	Release of radioactive supernate to the soil surface from the underground piping between the SY-A or SY-B valve pit and a diversion box due to piping system leak.	Failure of primary and encasement piping due to external event (undermining from broken fluid transfer lines in vicinity)	SC: Press Switch Interlocks/alarms (water service line) SC: Transfer Piping SC: Pipe Encasement	LCO: 3.1.2M Service Water Press Detection Sys	SC: Trans Leak Detection Syss SS: Tank Level Detection Syss	LCO: 3.1.3M Trans Leak Detect Syss AC: 5.12M Transr Cntrls: - Material balance AC: 5.14 Emerg Prep	Controls based on Reanalyzed Accident for W058 Project
RCSTS-04/05-INTEG05	Release of radioactive supernate to the soil surface from the underground piping between the SY-A or SY-B valve pit and a diversion box due to piping system leak.	Failure of primary and encasement piping due to seismic event	None required	None Required	None required	AC: Emergency Preparedness	Controls based on Original BIO Accident Analysis
RCSTS-04/05-TEMP01	Release of radioactive supernate to the soil surface from the underground piping between the SY-A or SY-B valve pit and a diversion box due to piping system leak.	Failure of primary and encasement piping due to freezing	SC: Transfer Piping SC: Pipe Encasement	None	SS: Trans Leak Detect Sys SS: Tank Level Detection Syss	AC: 5.12M Transr Cntrls: - Material balance AC: 5.14 Emerg Prep LCO: 3.1.3M Trans Leak Detect Syss	Controls based on Reanalyzed Accident for W058 Project

Table D-3. Safety SSCs and TSRs for Potentially Severe (E3 and E2) Environmental Consequences. (53 sheets)

ID	Hazardous Conditions	Cause	Prev SSC	Prev TSR	Mit SSC	Mit TSR	Control MEMO
RCSTS-08-FLOW03	Release of radioactive supernate to soil surface from overflow of diversion box due to piping system leak.	External leak of valve or valves to the diversion box	SC: Trans Leak Detect Sys	LCO: 3.1.3M Trans Leak Detect Syss	SC: Entry Doors SC: Diversion Box Struct SS: Tank Level Detect Syss SC: Trans Leak Detect Syss	LCO: 3.1.1M Trans Sys Cover/Entry Doors AC: 5.12M Trans Contrls: - Material Balance AC: 5.14 Emerg Prep AC: 5.22M Trans Sys cover removal/entry door closure cntrls LCO: 3.1.3M Trans Leak Detect Syss	Controls based on Reanalyzed Accident for W058 Project
RCSTS-08-FLOW04	Release of radioactive slurry to soil surface from overflow of diversion box due to piping system leak.	External leak of valve or valves to the diversion box	SC: Trans Leak Detect Sys	LCO: 3.1.3M Trans Leak Detect Syss	SC: Entry Doors SC: Diversion Box Struct SS: Tank Level Detect Syss SC: Trans Leak Detect Syss	LCO: 3.1.1M Trans Sys Cover/Entry Doors AC: 5.12M Trans Contrls: - Material Balance AC: 5.14 Emerg Prep AC: 5.22M Trans Sys cover removal/entry door closure cntrls LCO: 3.1.3M Trans Leak Detect Syss	Controls based on Reanalyzed Accident for W058 Project

Table D-3. Safety SSCs and TSRs for Potentially Severe (E3 and E2) Environmental Consequences. (53 sheets)

ID	Hazardous Conditions	Cause	Prev SSC	Prev TSR	Mit SSC	Mit TSR	Control MEMO
RCSTS-08-FLOW05	Release of radioactive supernate to soil surface from overflow of diversion box due to piping system leak.	Backflow of supernate to sump pump line, through sump pump and onto diversion box floor	SS: Trans Leak Detect Sys	AC: 5.12M Trans Cntrls: - Config Management - Route Verification LCO: 3.1.3M Trans Leak Detect Syss	SC: Entry Doors SC: Diversion Box Struct SS: Tank Level Detect Syss SC: Trans Leak Detect Syss	LCO: 3.1.1M Trans Sys Cover/Entry Doors LCO: 3.1M Inlet Air HEPA Filter AC: 5.12M Trans Cntrls: - Material Balance AC: 5.14 Emerg Prep AC: 5.22M Trans Sys cover removal/entry door closure cntrls LCO: 3.1.3M Trans Leak Detect Syss	Controls based on Reanalyzed Accident for W058 Project
RCSTS-08-FLOW08	Release of radioactive aerosols to the atmosphere caused by spray leak of slurry from diversion box due to piping system leak.	External leak of valve or valves to the diversion box	None Required	None Required	SC: Entry Doors SC: Diversion Box Struct SS: HEPA filter Sys SS: Emergency pumpout line SS: Air sample line SS: Exhauster hookup	LCO: 3.1.1M Trans Sys Cover/Entry Doors AC: 5.18M HEPA Filter Cntrls AC: 5.14 Emerg Prep AC: 5.22M Trans Sys cover removal/entry door closure cntrls	Controls based on Reanalyzed Accident for W058 Project
RCSTS-08-INTEG01	Release of radioactive slurry to soil surface from overflow of diversion box due to piping system leak.	Failure of piping due to corrosion	SC: Trans Piping SC: Trans Leak Detect Sys	LCO: 3.1.3M Trans Leak Detect Syss	SC: Entry Doors SC: Diversion Box Struct SS: Tank Level Detect Syss SC: Trans Leak Detect Syss	LCO: 3.1.1M Trans Sys Cover/Entry Doors AC: 5.12M Trans Cntrls: - Material Balance AC: 5.14 Emerg Prep AC: 5.22M Trans Sys cover removal/entry door closure cntrls LCO: 3.1.3M Trans Leak Detect Syss	Controls based on Reanalyzed Accident for W058 Project

Table D-3. Safety SSCs and TSRs for Potentially Severe (E3 and E2) Environmental Consequences. (53 sheets)

ID	Hazardous Conditions	Cause	Prev SSC	Prev TSR	Mit SSC	Mit TSR	Control MEMO
RCSTS-08-INTEG02	Release of radioactive slurry to soil surface from overflow of diversion box due to piping system leak.	External event (airplane crash, etc)	None Required	None Required	None Required	AC: 5.14 Emerg Prep	No controls required based on the TWRS BIO
RCSTS-08-INTEG03	Release of radioactive slurry to soil surface from overflow of diversion box due to piping system leak.	Flammable gas explosion from release of trapped flammable gas within pipe combined with ignition source	None required	AC: Ign Cntrls - Cntrls sparking - Cntrls electrostatic ign sources - Polymer material cntrls - Surface temp for equip contact waste - NFPA 70 Class 1 Div 1 & 2 requirements - Purged and pres equip cntrls	SS: Trans Leak Detect Sys	LCO: 3.1.3M Trans Leak Detect Syss AC: 5.14 Emerg Prep	Controls based on Original BIO Accident Analysis
RCSTS-08-INTEG04	Release of radioactive slurry to soil surface from overflow of diversion box due to piping system leak.	Failure of piping due to material defect	SC: Trans Piping SC: Trans Leak Detect Sys	LCO: 3.1.3M Trans Leak Detect Syss	SC: Entry Doors SC: Diversion Box and Vent Station Struct SS: Tank Level Detect Syss SC: Trans Leak Detect Syss	LCO: 3.1.1M Trans Sys Cover/Entry Doors AC: 5.12M Trans Cntrls: - Material Balance AC: 5.14 Emerg Prep AC: 5.22M Trans Sys cover removal/entry door closure cntrls LCO: 3.1.3M Trans Leak Detect Syss	Controls based on Reanalyzed Accident for W058 Project

Table D-3. Safety SSCs and TSRs for Potentially Severe (E3 and E2) Environmental Consequences. (53 sheets)

ID	Hazardous Conditions	Cause	Prev SSC	Prev TSR	Mit SSC	Mit TSR	Control MEMO
RCSTS-08-INTEG05	Release of radioactive slurry to soil surface from overflow of diversion box due to piping system leak.	Slurry pump overspeed causing catastrophic failure of pump with missiles damaging pipe	SC: Trans Leak Detect Sys	LCO: 3.1.3M Trans Leak Detect Syss AC: 5.20 Trans Pump Admin Lock Cntrls	SC: Entry Doors SC: Diversion Box Struct SS: Tank Level Detect Syss SC: Trans Leak Detect Syss	LCO: 3.1.1M Trans Sys Cover/Entry Doors AC: 5.12M Trans Cntrls: - Material Balance AC: 5.14 Emerg Prep AC: 5.22M Trans Sys cover removal/entry door closure cntrls LCO: 3.1.3M Trans Leak Detect Syss	Controls based on Reanalyzed Accident for W058 Project
RCSTS-08-INTEG06	Release of radioactive slurry to soil surface from overflow of diversion box due to piping system leak.	Seismic event	None required	None Required	None required	AC: Emergency Preparedness	Controls based on Original BIO Accident Analysis
RCSTS-08-INTEG07	Release of radioactive supernate to soil surface from overflow of diversion box due to piping system leak.	Seismic event	None required	None Required	None required	AC: Emergency Preparedness	Controls based on Original BIO Accident Analysis
RCSTS-08-INTEG08	Release of radioactive aerosols to the atmosphere caused by spray leak of slurry from diversion box due to piping system leak.	Failure of piping due to corrosion	None Required	None Required	SC: Entry Doors SC: Diversion Box Struct SS: HEPA filter Sys SS: Emergency pumpout line SS: Air sample line SS: Exhauster hookup	LCO: 3.1.1M Trans Sys Cover/Entry Doors AC: 5.18M HEPA Filter Cntrls AC: 5.14 Emerg Prep AC: 5.22M Trans Sys cover removal/entry door closure cntrls	Controls based on Reanalyzed Accident for W058 Project
RCSTS-08-INTEG09	Release of radioactive aerosols to the atmosphere caused by spray leak of slurry from diversion box due to piping system leak.	External event (airplane crash, etc)	None Required	None Required	None Required	AC: 5.14 Emerg Prep	No controls required based on the TWRS BIO

Table D-3. Safety SSCs and TSRs for Potentially Severe (E3 and E2) Environmental Consequences. (53 sheets)

ID	Hazardous Conditions	Cause	Prev SSC	Prev TSR	Mit SSC	Mit TSR	Control MEMO
RCSTS-08-INTEG10	Release of radioactive aerosols to the atmosphere caused by spray leak of supernate from diversion box due to piping system leak.	External event (airplane crash, etc)	None Required	None Required	None Required	AC: 5.14 Emerg Prep	No controls required based on the TWRS BIO
RCSTS-08-INTEG11	Release of radioactive aerosols to the atmosphere caused by spray leak of slurry from diversion box due to piping system leak.	Flammable gas explosion from release of trapped flammable gas within pipe combined with ignition source	None required	AC: Ign Cntrls AC: 5.11 Flam Gas	SC: Entry Doors SC: Diversion Box Struct SS: HEPA filter Sys SS: Emergency pumpout line SS: Air sample line SS: Exhauster hookup	LCO: 3.1.1M Trans Sys Cover/Entry Doors AC: 5.18M HEPA Filter Cntrls AC: 5.14 Emerg Prep AC: 5.22M Trans Sys cover removal/entry door closure cntrls	Controls based on Reanalyzed Accident for W058 Project
RCSTS-08-INTEG12	Release of radioactive aerosols to the atmosphere from the 6241-A diversion box due to fire or explosion of flammable gas.	Fire or explosion in the diversion box caused by buildup of flammable gas because of spill of supernate to diversion box sump	None required	AC: Ign Cntrls - Cntrls sparking - Cntrls electrostatic ign sources - Polymer material cntrls - Surface temp for equip contact waste - NFPA 70 Class 1 Div 1 & 2 requirements - Purged and pres equip cntrls AC: 5.11 Flam Gas Mon Cntrl	None required	AC: Emerg Prep	Controls based on Original BIO Accident Analysis
RCSTS-08-INTEG13	Release of radioactive aerosols to the atmosphere caused by spray leak of slurry from diversion box due to piping system leak.	Failure of piping due to material defect	None Required	None Required	SC: Entry Doors SC: Diversion Box Struct SS: HEPA filter Sys SS: Emergency pumpout line SS: Air sample line SS: Exhauster hookup	LCO: 3.1.1M Trans Sys Cover/Entry Doors AC: 5.18M HEPA Filter Cntrls AC: 5.14 Emerg Prep AC: 5.22M Trans Sys cover removal/entry door closure cntrls	Controls based on Reanalyzed Accident for W058 Project

Table D-3. Safety SSCs and TSRs for Potentially Severe (E3 and E2) Environmental Consequences. (53 sheets)

ID	Hazardous Conditions	Cause	Prev SSC	Prev TSR	Mit SSC	Mit TSR	Control MEMO
RCSTS-08-INTEG14	Release of radioactive aerosols to the atmosphere caused by spray leak of slurry from diversion box due to piping system leak.	Slurry pump overspeed causing catastrophic failure of pump with missiles damaging pipe and challenging diversion box confinement	None Required	AC: 5.20 Trans Pump Admin Lock Cntrls	SC: Entry Doors SC: Diversion Box Struct SS: HEPA filter Sys SS: Emergency pumpout line SS: Air sample line SS: Exhauster hookup	LCO: 3.1.1M Trans Sys Cover/Entry Doors AC: 5.18M HEPA Filter Cntrls AC: 5.14 Emerg Prep AC: 5.22M Trans Sys cover removal/entry door closure cntrls	Controls based on Reanalyzed Accident for W058 Project
RCSTS-08-INTEG15	Release of radioactive aerosols to the atmosphere caused by spray leak of slurry from diversion box due to piping system leak.	Seismic event	None required	None Required	None required	AC: Emergency Preparedness	Controls based on Original BIO Accident Analysis
RCSTS-08-INTEG16	Release of radioactive aerosols to the atmosphere caused by spray leak of supernate from diversion box due to piping system leak.	Seismic event	None required	None Required	None required	AC: Emergency Preparedness	Controls based on Original BIO Accident Analysis
RCSTS-08-INTEG17a	Release of radioactive supernate to the soil surface from overflow of diversion box due to piping system leak.	Failure of piping due to corrosion plus mitigative features failure	SC: Trans Piping SC: Trans Leak Detect Sys	LCO: 3.1.3M Trans Leak Detect Syss	SC: Entry Doors SC: Diversion Box Struct SS: Tank Level Detect Syss SC: Trans Leak Detect Syss	LCO: 3.1.1M Trans Sys Cover/Entry Doors AC: 5.12M Trans Contrls: - Material Balance AC: 5.14 Emerg Prep AC: 5.22M Trans Sys cover removal/entry door closure cntrls LCO: 3.1.3M Trans Leak Detect Syss	Controls based on Reanalyzed Accident for W058 Project

Table D-3. Safety SSCs and TSRs for Potentially Severe (E3 and E2) Environmental Consequences. (53 sheets)

ID	Hazardous Conditions	Cause	Prev SSC	Prev TSR	Mit SSC	Mit TSR	Control MEMO
RCSTS-08-INTEG17b	Release of radioactive supernate to the soil surface from overflow of diversion box due to piping system leak.	Failure of piping due to unrecognized material flaw	SC: Trans Piping SC: Trans Leak Detect Sys	LCO: 3.1.3M Trans Leak Detect Syss	SC: Entry Doors SC: Diversion Box Struct SS: Tank Level Detect Syss SC: Trans Leak Detect Syss	LCO: 3.1.1M Trans Sys Cover/Entry Doors AC: 5.12M Trans Contrls: - Material Balance AC: 5.14 Emerg Prep AC: 5.22M Trans Sys cover removal/entry door closure cntrls LCO: 3.1.3M Trans Leak Detect Syss	Controls based on Reanalyzed Accident for W058 Project
RCSTS-08-INTEG18	Release of radioactive supernate to the soil surface from overflow of diversion box due to piping system leak.	Failure of piping due to external event (airplane crash, volcanism, etc)	None Required	None Required	None Required	AC: 5.14 Emerg Prep	No controls required based on the TWRS BIO
RCSTS-08-PRES02	Release of radioactive slurry to soil surface from overflow of diversion box due to piping system leak.	Water hammer	SC: Trans Leak Detect Sys	LCO: 3.1.3M Trans Leak Detect Syss AC: 5.12M Trans Cntrls - Config Management - Route Verification	SC: Entry Doors SC: Diversion Box Struct SS: Tank Level Detect Syss SC: Trans Leak Detect Syss	LCO: 3.1.1M Trans Sys Cover/Entry Doors AC: 5.12M Trans Contrls: - Material Balance AC: 5.14 Emerg Prep AC: 5.22M Trans Sys cover removal/entry door closure cntrls LCO: 3.1.3M Trans Leak Detect Syss	Controls based on Reanalyzed Accident for W058 Project

Table D-3. Safety SSCs and TSRs for Potentially Severe (E3 and E2) Environmental Consequences. (53 sheets)

ID	Hazardous Conditions	Cause	Prev SSC	Prev TSR	Mit SSC	Mit TSR	Control MEMO
RCSTS-08-PRES03	Release of radioactive supernate to soil surface from overflow of diversion box due to piping system leak.	Water hammer	SC: Trans Leak Detect Sys	LCO: 3.1.3M Trans Leak Detect Syss AC: 5.12M Trans Cntrls - Config Management - Route Verification	SC: Entry Doors SC: Diversion Box and Vent Station Struct SS: Tank Level Detect Syss SC: Trans Leak Detect Syss	LCO: 3.1.1M Trans Sys Cover/Entry Doors AC: 5.12M Trans Cntrls: - Material Balance AC: 5.14 Emerg Prep AC: 5.22M Trans Sys cover removal/entry door closure cntrls LCO: 3.1.3M Trans Leak Detect Syss	Controls based on Reanalyzed Accident for W058 Project
RCSTS-08-PRES04	Release of radioactive aerosols to the atmosphere caused by spray leak of slurry from diversion box due to piping system leak.	Water hammer	None Required	AC: 5.12M Trans Cntrls: - Config Management - Indep Route Verification AC: 5.20 Trans Pump Admin Lock Cntrls	SC: Entry doors SC: Diversion box structure SS: HEPA filter Sys SS: Emergency pumpout line SS: Air sample line SS: Exhauster hookup	LCO: 3.1.1M Trans Sys Covers/Entry Doors AC: 5.18M HEPA Filter Cntrls AC: 5.22M Trans Sys Cover Removal/Entry Door Closure Cntrls AC: 5.14 Emerg Prep	Controls based on Reanalyzed Accident for W058 Project
RCSTS-08-PRES05	Release of radioactive aerosols to the atmosphere caused by spray leak of supernate from diversion box due to piping system leak.	Water hammer	None Required	AC: 5.12M Trans Cntrls: - Config Management - Indep Route Verification AC: 5.20 Trans Pump Admin Lock Cntrls	SC: Entry doors SC: Diversion box structure SS: HEPA filter Sys SS: Emergency pumpout line SS: Air sample line SS: Exhauster hookup	LCO: 3.1.1M Trans Sys Covers/Entry Doors AC: 5.18M HEPA Filter Cntrls AC: 5.22M Trans Sys Cover Removal/Entry Door Closure Cntrls AC: 5.14 Emerg Prep	Controls based on Reanalyzed Accident for W058 Project

Table D-3. Safety SSCs and TSRs for Potentially Severe (E3 and E2) Environmental Consequences. (53 sheets)

ID	Hazardous Conditions	Cause	Prev SSC	Prev TSR	Mit SSC	Mit TSR	Control MEMO
RCSTS-08-TEMP01	Release of radioactive slurry to soil surface from overflow of diversion box due to piping system leak.	Freezing of piping within the diversion box due to cold temperatures caused by running the exhauster	SC: Trans Leak Detect Sys	LCO: 3.1.3M Trans Leak Detect Syss	SC: Entry Doors SC: Diversion Box Struct SS: Tank Level Detect Syss SC: Trans Leak Detect Syss	LCO: 3.1.1M Trans Sys Cover/Entry Doors AC: 5.12M Trans Contrls: - Material Balance AC: 5.14 Emerg Prep AC: 5.22M Trans Sys cover removal/entry door closure cntrls LCO: 3.1.3M Trans Leak Detect Syss	Controls based on Reanalyzed Accident for W058 Project
RCSTS-08-TEMP02	Release of radioactive aerosols to the atmosphere caused by spray leak of slurry from diversion box due to piping system leak.	Freezing of piping within the diversion box due to cold temperatures caused by running the exhauster	None Required	None Required	SC: Entry doors SC: Diversion box structure SS: HEPA filter Sys SS: Emergency pumpout line SS: Air sample line SS: Exhauster hookup	LCO: 3.1.1M Trans Sys Covers/Entry Doors AC: 5.18M HEPA Filter Cntrls AC: 5.22M Trans Sys Cover Removal/Entry Door Closure Cntrls AC: 5.14 Emerg Prep	Controls based on Reanalyzed Accident for W058 Project
RCSTS-08-TEMP03	Release of radioactive aerosols to the atmosphere caused by spray leak of supernate from diversion box due to piping system leak.	Freezing of piping within the diversion box due to cold temperatures caused by running the exhauster	None Required	None Required	SC: Entry doors SC: Diversion box structure SS: HEPA filter Sys SS: Emergency pumpout line SS: Air sample line SS: Exhauster hookup	LCO: 3.1.1M Trans Sys Covers/Entry Doors AC: 5.18M HEPA Filter Cntrls AC: 5.22M Trans Sys Cover Removal/Entry Door Closure Cntrls AC: 5.14 Emerg Prep	Controls based on Reanalyzed Accident for W058 Project

Table D-3. Safety SSCs and TSRs for Potentially Severe (E3 and E2) Environmental Consequences. (53 sheets)

ID	Hazardous Conditions	Cause	Prev SSC	Prev TSR	Mit SSC	Mit TSR	Control MEMO
RCSTS-08-TEMP04	Release of radioactive supernate to the soil surface from overflow of diversion box due to piping system leak.	Failure of piping due to freezing	SC: Trans Leak Detect Sys	LCO: 3.1.3M Trans Leak Detect Syss	SC: Entry Doors SC: Diversion Box Struct SS: Tank Level Detect Syss SC: Trans Leak Detect Syss	LCO: 3.1.1M Trans Sys Cover/Entry Doors AC: 5.12M Trans Contrls: - Material Balance AC: 5.14 Emerg Prep AC: 5.22M Trans Sys cover removal/entry door closure cntrls LCO: 3.1.3M Trans Leak Detect Syss	Controls based on Reanalyzed Accident for W058 Project
RCSTS-09-FLOW01	Release of radioactive slurry to soil surface from overflow of vent station due to piping system leak.	Flow of slurry to vent station due to incomplete closing of vent valves after venting	SC: Trans Leak Detect Sys	LCO: 3.1.3M Trans Leak Detect Syss	SC: Entry Doors SC: Vent Station Struct SS: Tank Level Detect Syss SC: Trans Leak Detect Syss	LCO: 3.1.1M Trans Sys Cover/Entry Doors AC: 5.12M Trans Contrls: - Material Balance AC: 5.14 Emerg Prep AC: 5.22M Trans Sys cover removal/entry door closure cntrls LCO: 3.1.3M Trans Leak Detect Syss	Controls based on Reanalyzed Accident for W058 Project

Table D-3. Safety SSCs and TSRs for Potentially Severe (E3 and E2) Environmental Consequences. (53 sheets)

ID	Hazardous Conditions	Cause	Prev SSC	Prev TSR	Mit SSC	Mit TSR	Control MEMO
RCSTS-09-FLOW04	Release of radioactive slurry to soil surface from overflow of vent station due to piping system leak.	External leak of valve or valves to the vent station	SC: Trans Leak Detect Sys	LCO: 3.1.3M Trans Leak Detect Syss	SC: Entry Doors SC: Vent Station Struct SS: Tank Level Detect Syss SC: Trans Leak Detect Syss	LCO: 3.1.1M Trans Sys Cover/Entry Doors AC: 5.12M Trans Contrls: - Material Balance AC: 5.14 Emerg Prep AC: 5.22M Trans Sys cover removal/entry door closure cntrls LCO: 3.1.3M Trans Leak Detect Syss	Controls based on Reanalyzed Accident for W058 Project
RCSTS-09-FLOW05	Release of radioactive supernate to soil surface from overflow of vent station due to piping system leak.	External leak of valve or valves to the vent station	SC: Trans Leak Detect Sys	LCO: 3.1.3M Trans Leak Detect Syss	SC: Entry Doors SC: Vent Station Struct SS: Tank Level Detect Syss SC: Trans Leak Detect Syss	LCO: 3.1.1M Trans Sys Cover/Entry Doors AC: 5.12M Trans Contrls: - Material Balance AC: 5.14 Emerg Prep AC: 5.22M Trans Sys cover removal/entry door closure cntrls LCO: 3.1.3M Trans Leak Detect Syss	Controls based on Reanalyzed Accident for W058 Project
RCSTS-09-FLOW06	Release of radioactive supernate to soil surface from overflow of vent station due to piping system leak.	Flow of supernate to vent station due to incomplete closing of vent valves after venting	SC: Trans Leak Detect Sys	LCO: 3.1.3M Trans Leak Detect Syss	SC: Entry Doors SC: Vent Station Struct SS: Tank Level Detect Syss SC: Trans Leak Detect Syss	LCO: 3.1.1M Trans Sys Cover/Entry Doors AC: 5.12M Trans Contrls: - Material Balance AC: 5.14 Emerg Prep AC: 5.22M Trans Sys cover removal/entry door closure cntrls LCO: 3.1.3M Trans Leak Detect Syss	Controls based on Reanalyzed Accident for W058 Project

Table D-3. Safety SSCs and TSRs for Potentially Severe (E3 and E2) Environmental Consequences. (53 sheets)

ID	Hazardous Conditions	Cause	Prev SSC	Prev TSR	Mit SSC	Mit TSR	Control MEMO
RCSTS-09-FLOW07	Release of radioactive supernate to soil surface from overflow of vent station due to piping system leak.	Backflow of supernate to sump pump line, through sump pump and onto vent station floor	SS: Trans Leak Detect Sys	AC: 5.12M Trans Cntrls: - Config Management - Route Verification LCO: 3.1.3M Trans Leak Detect Syss	SC: Entry Doors SC: Vent Station Struct SS: Tank Level Detect Syss SC: Trans Leak Detect Syss	LCO: 3.1.1M Trans Sys Cover/Entry Doors LCO: 3.1M Inlet Air HEPA Filter AC: 5.12M Trans Contrls: - Material Balance AC: 5.14 Emerg Prep AC: 5.22M Trans Sys cover removal/entry door closure cntrls LCO: 3.1.3M Trans Leak Detect Syss	Controls based on Reanalyzed Accident for W058 Project
RCSTS-09-FLOW10	Release of radioactive aerosols to the atmosphere caused by spray leak of slurry from vent station due to piping system leak.	External leak of valve or valves to the vent station	None Required	None Required	SC: Entry Doors SC: Vent station structure SS: HEPA filter Sys SS: Emergency pumpout line SS: Air sample line SS: Exhauster hookup	LCO: 3.1.1M Trans Sys Cover/Entry Doors AC: 5.18M HEPA Filter Cntrls AC: 5.14 Emerg Prep AC: 5.22M Trans Sys cover removal/entry door closure cntrls	Controls based on Reanalyzed Accident for W058 Project

Table D-3. Safety SSCs and TSRs for Potentially Severe (E3 and E2) Environmental Consequences. (53 sheets)

ID	Hazardous Conditions	Cause	Prev SSC	Prev TSR	Mit SSC	Mit TSR	Control MEMO
RCSTS-09-FLOW11	Release of radioactive supernate to soil surface from overflow of vent station due to piping system leak.	Backflow of supernate to sump pump line, through sump pump and onto vent station floor	SS: Trans Leak Detect Sys	AC: 5.12M Trans Cntrls: - Config Management - Route Verification LCO: 3.1.3M Trans Leak Detect Syss	SC: Entry Doors SC: Vent Station Struct SS: Tank Level Detect Syss SC: Trans Leak Detect Syss	LCO: 3.1.1M Trans Sys Cover/Entry Doors LCO: 3.1M Inlet Air HEPA Filter AC: 5.12M Trans Contrls: - Material Balance AC: 5.14 Emerg Prep AC: 5.22M Trans Sys cover removal/entry door closure cntrls LCO: 3.1.3M Trans Leak Detect Syss	Controls based on Reanalyzed Accident for W058 Project
RCSTS-09-INTEG01	Release of radioactive slurry to soil surface from overflow of vent station due to piping system leak.	Failure of piping due to corrosion	SC: Trans Piping SC: Trans Leak Detect Sys	LCO: 3.1.3M Trans Leak Detect Syss	SC: Entry Doors SC: Vent Station Struct SS: Tank Level Detect Syss SC: Trans Leak Detect Syss	LCO: 3.1.1M Trans Sys Cover/Entry Doors AC: 5.12M Trans Contrls: - Material Balance AC: 5.14 Emerg Prep AC: 5.22M Trans Sys cover removal/entry door closure cntrls LCO: 3.1.3M Trans Leak Detect Syss	Controls based on Reanalyzed Accident for W058 Project

Table D-3. Safety SSCs and TSRs for Potentially Severe (E3 and E2) Environmental Consequences. (53 sheets)

ID	Hazardous Conditions	Cause	Prev SSC	Prev TSR	Mit SSC	Mit TSR	Control MEMO
RCSTS-09-INTEG02	Release of radioactive supernate to soil surface from overflow of vent station due to piping system leak.	Failure of piping due to corrosion	SC: Trans Piping SC: Trans Leak Detect Sys	LCO: 3.1.3M Trans Leak Detect Syss	SC: Entry Doors SC: Vent Station Struct SS: Tank Level Detect Syss SC: Trans Leak Detect Syss	LCO: 3.1.1M Trans Sys Cover/Entry Doors AC: 5.12M Trans Contrls: - Material Balance AC: 5.14 Emerg Prep AC: 5.22M Trans Sys cover removal/entry door closure cntrls LCO: 3.1.3M Trans Leak Detect Syss	Controls based on Reanalyzed Accident for W058 Project
RCSTS-09-INTEG03	Release of radioactive slurry to soil surface from overflow of vent station due to piping system leak.	External event (airplane crash, etc)	None Required	None Required	None Required	AC: 5.14 Emerg Prep	No controls required based on the TWRS BIO
RCSTS-09-INTEG04	Release of radioactive supernate to soil surface from overflow of vent station due to piping system leak.	External event (airplane crash, etc)	None Required	None Required	None Required	AC: 5.14 Emerg Prep	No controls required based on the TWRS BIO
RCSTS-09-INTEG05	Release of radioactive slurry to soil surface from overflow of vent station due to piping system leak.	Flammable gas explosion from release of trapped flammable gas within pipe combined with ignition source	None required	AC: Ign Cntrls - Cntrls sparking - Cntrls electrostatic ign sources - Polymer material cntrls - Surface temp for equip contact waste - NFPA 70 Class 1 Div 1 & 2 requirements - Purged and pres equip cntrls AC: 5.11 Flam Gas Mon Cntrl	SS: Trans Leak Detect Sys	LCO: 3.1.3M Trans Leak Detect Syss AC: 5.14 Emerg Prep	Controls based on Original BIO Accident Analysis

Table D-3. Safety SSCs and TSRs for Potentially Severe (E3 and E2) Environmental Consequences. (53 sheets)

ID	Hazardous Conditions	Cause	Prev SSC	Prev TSR	Mit SSC	Mit TSR	Control MEMO
RCSTS-09-INTEG06	Release of radioactive aerosols to the atmosphere from the vent station due to fire or explosion of flammable gas.	Fire or explosion in the vent station caused by buildup of flammable gas because of spill of supernate or slurry to vent station	None required	AC: Ign Cntrls - Cntrls sparking - Cntrls electrostatic ign sources - Polymer material cntrls - Surface temp for equip contact waste - NFPA 70 Class 1 Div 1 & 2 requirements - Purged and pres equip cntrls AC: 5.11 Flam Gas Mon Cntrl	None Required	AC: Emerg Prep	Controls based on Original BIO Accident Analysis
RCSTS-09-INTEG07	Release of radioactive slurry to soil surface from overflow of vent station due to piping system leak.	Failure of piping due to material defect	SC: Trans Piping SC: Trans Leak Detect Sys	LCO: 3.1.3M Trans Leak Detect Syss	SC: Entry Doors SC: Diversion Box and Vent Station Struct SS: Tank Level Detect Syss SC: Trans Leak Detect Syss	LCO: 3.1.1M Trans Sys Cover/Entry Doors AC: 5.12M Trans Cntrls: - Material Balance AC: 5.14 Emerg Prep AC: 5.22M Trans Sys cover removal/entry door closure cntrls LCO: 3.1.3M Trans Leak Detect Syss	Controls based on Reanalyzed Accident for W058 Project
RCSTS-09-INTEG08	Release of radioactive supernate to soil surface from overflow of vent station due to piping system leak.	Failure of piping due to material defect	SC: Trans Piping SC: Trans Leak Detect Sys	LCO: 3.1.3M Trans Leak Detect Syss	SC: Entry Doors SC: Vent Station Struct SS: Tank Level Detect Syss SC: Trans Leak Detect Syss	LCO: 3.1.1M Trans Sys Cover/Entry Doors AC: 5.12M Trans Cntrls: - Material Balance AC: 5.14 Emerg Prep AC: 5.22M Trans Sys cover removal/entry door closure cntrls LCO: 3.1.3M Trans Leak Detect Syss	Controls based on Reanalyzed Accident for W058 Project

Table D-3. Safety SSCs and TSRs for Potentially Severe (E3 and E2) Environmental Consequences. (53 sheets)

ID	Hazardous Conditions	Cause	Prev SSC	Prev TSR	Mit SSC	Mit TSR	Control MEMO
RCSTS-09-INTEG09	Release of radioactive slurry to soil surface from overflow of vent station due to piping system leak.	Seismic event	None required	None Required	None required	AC: Emergency Preparedness	Controls based on Original BIO Accident Analysis
RCSTS-09-INTEG10	Release of radioactive supernate to soil surface from overflow of vent station due to piping system leak.	Seismic event	None required	None Required	None required	AC: Emergency Preparedness	Controls based on Original BIO Accident Analysis
RCSTS-09-INTEG11	Release of radioactive aerosols to the atmosphere caused by spray leak of slurry from vent station due to piping system leak.	Failure of piping due to corrosion	None Required	None Required	SC: Entry Doors SC: Vent station structure SS: HEPA filter Sys SS: Emergency pumpout line SS: Air sample line SS: Exhauster hookup	LCO: 3.1.1M Trans Sys Cover/Entry Doors AC: 5.18M HEPA Filter Cntrls AC: 5.14 Emerg Prep AC: 5.22M Trans Sys cover removal/entry door closure cntrls	Controls based on Reanalyzed Accident for W058 Project
RCSTS-09-INTEG12	Release of radioactive aerosols to the atmosphere caused by spray leak of slurry from vent station due to piping system leak.	External event (airplane crash, etc)	None Required	None Required	None Required	AC: 5.14 Emerg Prep	No controls required based on the TWRS BIO
RCSTS-09-INTEG13	Release of radioactive aerosols to the atmosphere caused by spray leak of supernate from vent station due to piping system leak.	External event (airplane crash, etc)	None Required	None Required	None Required	AC: 5.14 Emerg Prep	No controls required based on the TWRS BIO

Table D-3. Safety SSCs and TSRs for Potentially Severe (E3 and E2) Environmental Consequences. (53 sheets)

ID	Hazardous Conditions	Cause	Prev SSC	Prev TSR	Mit SSC	Mit TSR	Control MEMO
RCSTS-09-INTEG14	Release of radioactive aerosols to the atmosphere caused by spray leak of slurry from vent station due to piping system leak.	Flammable gas explosion from release of trapped flammable gas within pipe combined with ignition source	None required	AC: Ign Cntrls - Cntrls sparking - Cntrls electrostatic ign sources - Polymer material cntrls - Surface temp for equip contact waste - NFPA 70 Class 1 Div 1 & 2 requirements - Purged and pres equip cntrls AC: 5.11 Flam Gas Mon Cntrl	None Required	AC: Emerg Prep	Controls based on Original BIO Accident Analysis
RCSTS-09-INTEG15	Release of radioactive aerosols to the atmosphere caused by spray leak of slurry from vent station due to piping system leak.	Failure of piping due to material defect	None Required	None Required	SC: Entry Doors SC: Vent station structure SS: HEPA filter Sys SS: Emergency pumpout line SS: Air sample line SS: Exhauster hookup	LCO: 3.1.1M Trans Sys Cover/Entry Doors AC: 5.18M HEPA Filter Cntrls AC: 5.14 Emerg Prep AC: 5.22M Trans Sys cover removal/entry door closure cntrls	Controls based on Reanalyzed Accident for W058 Project
RCSTS-09-INTEG16	Release of radioactive aerosols to the atmosphere caused by spray leak of slurry from vent station due to piping system leak.	Seismic event	None required	None Required	None required	AC: Emergency Preparedness	Controls based on Original BIO Accident Analysis
RCSTS-09-INTEG17	Release of radioactive aerosols to the atmosphere caused by spray leak of supernate from vent station due to piping system leak.	Seismic event	None required	None Required	None required	AC: Emergency Preparedness	Controls based on Original BIO Accident Analysis

Table D-3. Safety SSCs and TSRs for Potentially Severe (E3 and E2) Environmental Consequences. (53 sheets)

ID	Hazardous Conditions	Cause	Prev SSC	Prev TSR	Mit SSC	Mit TSR	Control MEMO
RCSTS-09-PRESO1	Release of radioactive slurry to soil surface from overflow of vent station due to piping system leak.	Water hammer	SC: Trans Leak Detect Sys	LCO: 3.1.3M Trans Leak Detect Syss AC: 5.12M Trans Cntrls - Config Management - Route Verification	SC: Entry Doors SC: Vent Station Struct SS: Tank Level Detect Syss SC: Trans Leak Detect Syss	LCO: 3.1.1M Trans Sys Cover/Entry Doors AC: 5.12M Trans Cntrls: - Material Balance AC: 5.14 Emerg Prep AC: 5.22M Trans Sys cover removal/entry door closure cntrls LCO: 3.1.3M Trans Leak Detect Syss	Controls based on Reanalyzed Accident for W058 Project
RCSTS-09-PRESO2	Release of radioactive supernate to soil surface from overflow of vent station due to piping system leak.	Water hammer	SC: Trans Leak Detect Sys	LCO: 3.1.3M Trans Leak Detect Syss AC: 5.12M Trans Cntrls - Config Management - Route Verification	SC: Entry Doors SC: Vent Station Struct SS: Tank Level Detect Syss SC: Trans Leak Detect Syss	LCO: 3.1.1M Trans Sys Cover/Entry Doors AC: 5.12M Trans Cntrls: - Material Balance AC: 5.14 Emerg Prep AC: 5.22M Trans Sys cover removal/entry door closure cntrls LCO: 3.1.3M Trans Leak Detect Syss	Controls based on Reanalyzed Accident for W058 Project
RCSTS-09-PRESO4	Release of radioactive aerosols to the atmosphere caused by spray leak of slurry from vent station due to piping system leak.	Water hammer	None Required	AC: 5.12M Trans Cntrls: - Config Management - Indep Route Verification AC: 5.20 Trans Pump Admin Lock Cntrls	SC: Entry doors SC: Vent station structure SS: HEPA filter Sys SS: Emergency pumpout line SS: Air sample line SS: Exhauster hookup	LCO: 3.1.1M Trans Sys Covers/Entry Doors AC: 5.18M HEPA Filter Cntrls AC: 5.14 Emerg Prep AC: 5.22M Trans Sys Cover Removal/Entry Door Closure Cntrls	Controls based on Reanalyzed Accident for W058 Project

Table D-3. Safety SSCs and TSRs for Potentially Severe (E3 and E2) Environmental Consequences. (53 sheets)

ID	Hazardous Conditions	Cause	Prev SSC	Prev TSR	Mit SSC	Mit TSR	Control MEMO
RCSTS-09-PRES05	Release of radioactive aerosols to the atmosphere caused by spray leak of supernate from vent station due to piping system leak.	Water hammer	None Required	AC: 5.12M Trans Cntrls: - Config Management - Indep Route Verification AC: 5.20 Trans Pump Admin Lock Cntrls	SC: Entry doors SC: Vent station structure SS: HEPA filter Sys SS: Emergency pumpout line SS: Air sample line SS: Exhauster hookup	LCO: 3.1.1M Trans Sys Covers/Entry Doors AC: 5.18M HEPA Filter Cntrls AC: 5.14 Emerg Prep AC: 5.22M Trans Sys Cover Removal/Entry Door Closure Cntrls	Controls based on Reanalyzed Accident for W058 Project
RCSTS-09-TEMP01	Release of radioactive slurry to soil surface from overflow of vent station due to piping system leak.	Freezing of piping within the vent station due to cold temperatures caused by running the exhauster	SC: Trans Leak Detect Sys	LCO: 3.1.3M Trans Leak Detect Syss	SC: Entry Doors SC: Vent Station Struct SS: Tank Level Detect Syss SC: Trans Leak Detect Syss	LCO: 3.1.1M Trans Sys Cover/Entry Doors AC: 5.12M Trans Cntrls: - Material Balance AC: 5.14 Emerg Prep AC: 5.22M Trans Sys cover removal/entry door closure cntrls LCO: 3.1.3M Trans Leak Detect Syss	Controls based on Reanalyzed Accident for W058 Project
RCSTS-09-TEMP02	Release of radioactive supernate to soil surface from overflow of vent station due to piping system leak.	Freezing of piping within the vent station due to cold temperatures caused by running the exhauster	SC: Trans Leak Detect Sys	LCO: 3.1.3M Trans Leak Detect Syss	SC: Entry Doors SC: Vent Station Struct SS: Tank Level Detect Syss SC: Trans Leak Detect Syss	LCO: 3.1.1M Trans Sys Cover/Entry Doors AC: 5.12M Trans Cntrls: - Material Balance AC: 5.14 Emerg Prep AC: 5.22M Trans Sys cover removal/entry door closure cntrls LCO: 3.1.3M Trans Leak Detect Syss	Controls based on Reanalyzed Accident for W058 Project

Table D-3. Safety SSCs and TSRs for Potentially Severe (E3 and E2) Environmental Consequences. (53 sheets)

ID	Hazardous Conditions	Cause	Prev SSC	Prev TSR	Mit SSC	Mit TSR	Control MEMO
RCSTS-09-TEMP03	Release of radioactive aerosols to the atmosphere caused by spray leak of slurry from vent station due to piping system leak.	Freezing of piping within the vent station due to cold temperatures caused by running the exhauster	None Required	None Required	SC: Entry doors SC: Vent station structure SS: HEPA filter Sys SS: Emergency pumpout line SS: Air sample line SS: Exhauster hookup	LCO: 3.1.1M Trans Sys Covers/Entry Doors AC: 5.18M HEPA Filter Cntrls AC: 5.22M Trans Sys Cover Removal/Entry Door Closure Cntrls AC: 5.14 Emerg Prep	Controls based on Reanalyzed Accident for W058 Project
RCSTS-09-TEMP04	Release of radioactive aerosols to the atmosphere caused by spray leak of supernate from vent station due to piping system leak.	Freezing of piping within the vent station due to cold temperatures caused by running the exhauster	None Required	None Required	SC: Entry doors SC: Vent station structure SS: HEPA filter Sys SS: Emergency pumpout line SS: Air sample line SS: Exhauster hookup	LCO: 3.1.1M Trans Sys Covers/Entry Doors AC: 5.14 Emerg Prep AC: 5.18M HEPA Filter Cntrls AC: 5.22M Trans Sys Cover Removal/Entry Door Closure Cntrls	Controls based on Reanalyzed Accident for W058 Project
RCSTS-10/11-INTEG01	Release of radioactive supernate to the soil from the underground piping between the diversion box and the vent station due to piping system leak.	Failure of primary and encasement piping due to external event (undermining from broken fluid transfer lines in vicinity)	SC: Press Switch Interlocks/alarms (water service line) SC: Transfer Piping SC: Pipe Encasement	LCO: 3.1.2M Service Water Press Detection Sys	SS: Trans Leak Detection Sys SS: Tank Level Detection Syss	LCO: 3.1.3M Trans Leak Detect Syss AC: 5.12M Transr Cntrls: - Material balance AC: 5.14 Emerg Prep	Controls based on Reanalyzed Accident for W058 Project
RCSTS-10/11-INTEG02a	Release of radioactive supernate to the soil from the underground piping between the diversion box and the vent station due to piping system leak.	Failure of primary and encasement piping due to corrosion	SC: Transfer Piping SC: Pipe Encasement	None Required	SS: Trans Leak Detect Sys SS: Tank Level Detection Syss	AC: 5.12M Transr Cntrls: - Material balance AC: 5.13 Encasement Seal Loop Controls AC: 5.14 Emerg Prep	Controls based on Reanalyzed Accident for W058 Project

Table D-3. Safety SSCs and TSRs for Potentially Severe (E3 and E2) Environmental Consequences. (53 sheets)

ID	Hazardous Conditions	Cause	Prev SSC	Prev TSR	Mit SSC	Mit TSR	Control MEMO
RCSTS-10/11-INTEG02b*	Release of radioactive supernate to the soil subsurface from the underground piping between the diversion box and the vent station due to piping system leak.	Failure of primary and encasement piping due to corrosion	SC: Transfer Piping SS: Pipe Encasements	None Required	SS: Tank Level Detection Syss SS: Trans Leak Detection Sys	LCO: 3.1.3 Trans Leak Detection Syss AC: 5.12M Trans Cntrls - Material Balance - Monitor Intercon Tanks	Controls based on Reanalyzed Accident for W058 Project
RCSTS-10/11-INTEG03a	Release of radioactive supernate to the soil from the underground piping between the diversion box and the vent station due to piping system leak.	Failure of primary and encasement piping due to external event (excavation accident)	SC: Transfer Piping SC: Pipe Encasement	AC: 5.17 Excavation Controls	SS: Trans Leak Detection Sys SS: Tank Level Detection Syss	LCO: 3.1.3M Trans Leak Detect Syss AC: 5.12M Transr Cntrls: - Material balance AC: 5.14 Emerg Prep	Controls based on Reanalyzed Accident for W058 Project
RCSTS-10/11-INTEG03b*	Release of radioactive supernate to the atmosphere from the underground piping between the diversion box and the vent station due to excavation of piping system and subsequent leak.	Failure of primary and encasement piping due to external event (excavation accident)	None required	AC: 5.17 Excavation Cntrls - Excavation permit - Coordination of transfers - Aboveground Labeling of Trans Lines - Restrictions on transfers	None required	AC: 5.17 Excavation Cntrls - Surveillance of all transfer lines with transfer in progress	Controls based on Reanalyzed Accident for W058 Project
RCSTS-10/11-INTEG04	Release of radioactive supernate to the soil from the underground piping between the diversion box and the vent station due to piping system leak.	Failure of primary and encasement piping due to external event (airplane crash, volcanism etc)	None Required	None Required	None Required	AC: 5.14 Emerg Prep	No controls required based on the TWRS BIO
RCSTS-10/11-INTEG05a	Release of radioactive supernate to the soil from the underground piping between the diversion box and the vent station due to piping system leak.	Failure of primary and encasement piping due to unrecognized material flaw	SC: Transfer Piping SC: Pipe Encasement	None Required	SS: Trans Leak Detect Sys SS: Tank Level Detection Syss	AC: 5.12M Transr Cntrls: - Material balance AC: 5.14 Emerg Prep LCO: 3.1.3M Trans Leak Detect Syss	Controls based on Reanalyzed Accident for W058 Project

Table D-3. Safety SSCs and TSRs for Potentially Severe (E3 and E2) Environmental Consequences. (53 sheets)

ID	Hazardous Conditions	Cause	Prev SSC	Prev TSR	Mit SSC	Mit TSR	Control MEMO
RCSTS-10/11-INTEG05b*	Release of radioactive supernate to the soil subsurface from the underground piping between the diversion box and the vent station due to piping system leak.	Failure of primary and encasement piping due to unrecognized material flaw	SC: Transfer Piping SS: Pipe Encasements	None Required	SS: Tank Level Detection Syss SS: Trans Leak Detection Sys	LCO: 3.1.3 Trans Leak Detection Syss AC: 5.12M Trans Cntrls - Material Balance - Monitor Intercon Tanks	Controls based on Reanalyzed Accident for W058 Project
RCSTS-10/11-INTEG06	Release of radioactive supernate to the soil from the underground piping between the diversion box and the vent station due to piping system leak.	Failure of primary and encasement piping due to seismic event	None required	None Required	None required	AC: Emergency Preparedness	Controls based on Original BIO Accident Analysis
RCSTS-10/11-PRES01a	Release of radioactive supernate to the soil from the underground piping between the diversion box and the vent station due to piping system leak.	Failure of primary and encasement piping due to water hammer	SC: Transfer Piping SC: Pipe Encasement	None	SC: Trans Leak Detect Syss SS: Tank Level Detection Syss	AC: 5.12M Transr Cntrls: - Material balance AC: 5.14 Emerg Prep LCO: 3.1.3M Trans Leak Detect Syss	Controls based on Reanalyzed Accident for W058 Project
RCSTS-10/11-PRES01b*	Release of radioactive supernate to the soil subsurface from the underground piping between the diversion box and the vent station due to piping system leak.	Failure of primary and encasement piping due to water hammer	SC: Transfer Piping SS: Pipe Encasements	AC: 5.12M Transfer Controls - Config Management - Indep Route Verification	SS: Tank Level Detection Syss SS: Trans Leak Detection Sys	LCO: 3.1.3 Trans Leak Detection Syss AC: 5.12M Trans Cntrls - Material Balance	Controls based on Reanalyzed Accident for W058 Project
RCSTS-10/11-TEMP01	Release of radioactive supernate to the soil from the underground piping between the diversion box and the vent station due to piping system leak.	Failure of primary piping and encasement due to freezing	SC: Transfer Piping SC: Pipe Encasement	None	SS: Trans Leak Detect Sys SS: Tank Level Detection Syss	AC: 5.12M Transr Cntrls: - Material balance AC: 5.14 Emerg Prep LCO: 3.1.3M Trans Leak Detect Syss	Controls based on Reanalyzed Accident for W058 Project

Table D-3. Safety SSCs and TSRs for Potentially Severe (E3 and E2) Environmental Consequences. (53 sheets)

ID	Hazardous Conditions	Cause	Prev SSC	Prev TSR	Mit SSC	Mit TSR	Control MEMO
RCSTS-10/11-TEMP02	Release of radioactive supernate to the soil from the underground piping between the diversion box and the vent station due to piping system leak.	Failure of primary and encasement piping due to thermal stress	SC: Transfer Piping SC: Pipe Encasement	None	SS: Trans Leak Detect Sys SS: Tank Level Detection Syss	AC: 5.12M Transr Cntrls: - Material balance AC: 5.14 Emerg Prep LCO: 3.1.3M Trans Leak Detect Syss	Controls based on Reanalyzed Accident for W058 Project
RCSTS-12/13-INTEG01	Release of radioactive supernate to the soil from the underground piping between the vent station and the 244-A Lift Station due to piping system leak.	Failure of primary and encasement piping due to external event (undermining from broken fluid transfer lines in vicinity)	SC: Press Switch Interlocks/alarms (water service line) SC: Transfer Piping SC: Pipe Encasement	LCO: 3.1.2M Service Water Press Detection Sys	SC: Trans Leak Detection Syss SS: Tank Level Detection Syss	LCO: 3.1.3M Trans Leak Detect Syss AC: 5.12M Transr Cntrls: - Material balance AC: 5.14 Emerg Prep	Controls based on Reanalyzed Accident for W058 Project
RCSTS-12/13-INTEG02a	Release of radioactive supernate to the soil from the underground piping between the vent station and the 244-A Lift Station due to piping system leak.	Failure of primary and encasement piping due to corrosion	SC: Transfer Piping SC: Pipe Encasement	None Required	SC: Trans Leak Detect Syss SS: Tank Level Detection Syss	AC: 5.12M Transr Cntrls: - Material balance AC: 5.14 Emerg Prep LCO: 3.1.3M Trans Leak Detect Syss	Controls based on Reanalyzed Accident for W058 Project
RCSTS-12/13-INTEG02b*	Release of radioactive supernate to the soil subsurface from the underground piping between the vent station and the 244-A Lift Station due to piping system leak.	Failure of primary and encasement piping due to corrosion	SC: Transfer Piping SS: Pipe Encasements	None Required	SS: Tank Level Detection Syss SS: Trans Leak Detection Sys	LCO: 3.1.3 Trans Leak Detection Syss AC: 5.12M Trans Cntrls - Material Balance - Monitor Intercon Tanks	Controls based on Reanalyzed Accident for W058 Project
RCSTS-12/13-INTEG03a	Release of radioactive supernate to the soil from the underground piping between the vent station and the 244-A Lift Station due to piping system leak.	Failure of primary and encasement piping due to external event (excavation accident)	SC: Transfer Piping SC: Pipe Encasement	AC: 5.17 Excavation Controls	SC: Trans Leak Detect Syss SS: Tank Level Detection Syss	AC: 5.12M Transr Cntrls: - Material balance AC: 5.14 Emerg Prep LCO: 3.1.3M Trans Leak Detect Syss	Controls based on Reanalyzed Accident for W058 Project

Table D-3. Safety SSCs and TSRs for Potentially Severe (E3 and E2) Environmental Consequences. (53 sheets)

ID	Hazardous Conditions	Cause	Prev SSC	Prev TSR	Mit SSC	Mit TSR	Control MEMO
RCSTS-12/13-INTEG03b*	Release of radioactive supernate to the atmosphere from the underground piping between the vent station and the 244-A Lift Station due to excavation of piping system and subsequent leak.	Failure of primary and encasement piping due to external event (excavation accident)	None required	AC: 5.17 Excavation Cntrls - Excavation permit - Coordination of transfers - Aboveground Labeling of Trans Lines - Restrictions on transfers	None required	AC: 5.17 Excavation Cntrls - Surveillance of all transfer lines with transfer in progress	Controls based on Reanalyzed Accident for W058 Project
RCSTS-12/13-INTEG04	Release of radioactive supernate to the soil from the underground piping between the vent station and the 244-A Lift Station due to piping system leak.	Failure of primary and encasement piping due to external event (airplane crash, volcanism etc)	None Required	None Required	None Required	AC: 5.14 Emerg Prep	No controls required based on the TWRS BIO
RCSTS-12/13-INTEG05a	Release of radioactive supernate to the soil from the underground piping between the vent station and the 244-A Lift Station due to piping system leak.	Failure of primary and encasement piping due to unrecognized material flaw	SC: Transfer Piping SC: Pipe Encasement	None Required	SC: Trans Leak Detect Syss SS: Tank Level Detection Syss	AC: 5.12M Transr Cntrls: - Material balance AC: 5.14 Emerg Prep LCO: 3.1.3M Trans Leak Detect Syss	Controls based on Reanalyzed Accident for W058 Project
RCSTS-12/13-INTEG05b*	Release of radioactive supernate to the soil subsurface from the underground piping between the vent station and the 244-A Lift Station due to piping system leak.	Failure of primary and encasement piping due to unrecognized material flaw	SC: Transfer Piping SS: Pipe Encasements	None Required	SS: Tank Level Detection Syss SS: Trans Leak Detection Sys	LCO: 3.1.3 Trans Leak Detection Syss AC: 5.12M Trans Cntrls - Material Balance - Monitor Intercon Tanks	Controls based on Reanalyzed Accident for W058 Project
RCSTS-12/13-INTEG06	Release of radioactive supernate to the soil from the underground piping between the vent station and the 244-A Lift Station due to piping system leak.	Failure of primary and encasement piping due to seismic event	None required	None Required	None required	AC: Emergency Preparedness	Controls based on Original BIO Accident Analysis

Table D-3. Safety SSCs and TSRs for Potentially Severe (E3 and E2) Environmental Consequences. (53 sheets)

ID	Hazardous Conditions	Cause	Prev SSC	Prev TSR	Mit SSC	Mit TSR	Control MEMO
RCSTS-12/13-PRES01a	Release of radioactive supernate to the soil from the underground piping between the vent station and the 244-A Lift Station due to piping system leak.	Failure of primary and encasement piping due to steam hammer caused by loss of flushwater flow to steam mixing chamber in east	SC: Transfer Piping SC: Pipe Encasement	None	SC: Trans Leak Detect Syss SS: Tank Level Detection Syss	AC: 5.12M Transr Cntrls: - Material balance AC: 5.14 Emerg Prep LCO: 3.1.3M Trans Leak Detect Syss	Controls based on Reanalyzed Accident for W058 Project
RCSTS-12/13-PRES01b*	Release of radioactive supernate to the soil subsurface from the underground piping between the vent station and the 244-A Lift Station due to piping system leak.	Failure of primary and encasement piping due to steam hammer caused by loss of flushwater flow to steam mixing chamber in east area	SC: Transfer Piping SS: Pipe Encasements	AC: 5.12M Transfer Controls - Config Management - Indep Route Verification	SS: Tank Level Detection Syss SS: Trans Leak Detection Sys	LCO: 3.1.3 Trans Leak Detection Syss AC: 5.12M Trans Cntrls - Material Balance	Controls based on Reanalyzed Accident for W058 Project
RCSTS-12/13-PRES02	Release of radioactive supernate to the soil from the underground piping between the vent station and the 244-A Lift Station due to piping system leak.	Failure of primary and encasement piping due to water hammer	SC: Transfer Piping SC: Pipe Encasement	None	SC: Trans Leak Detect Syss SS: Tank Level Detection Syss	AC: 5.12M Transr Cntrls: - Material balance AC: 5.14 Emerg Prep LCO: 3.1.3M Trans Leak Detect Syss	Controls based on Reanalyzed Accident for W058 Project
RCSTS-12/13-TEMP01	Release of radioactive supernate to the soil from the underground piping between the vent station and the 244-A Lift Station due to piping system leak.	Failure of primary piping and encasement due to freezing	SC: Transfer Piping SC: Pipe Encasement	None	SC: Trans Leak Detect Syss SS: Tank Level Detection Syss	AC: 5.12M Transr Cntrls: - Material balance AC: 5.14 Emerg Prep LCO: 3.1.3M Trans Leak Detect Syss	Controls based on Reanalyzed Accident for W058 Project
RCSTS-12/13-TEMP02	Release of radioactive supernate to the soil from the underground piping between the vent station and the 244-A Lift Station due to piping system leak.	Failure of primary and encasement piping due to thermal stress	SC: Transfer Piping SC: Pipe Encasement	None	SC: Trans Leak Detect Syss SS: Tank Level Detection Syss	AC: 5.12M Transr Cntrls: - Material balance AC: 5.14 Emerg Prep LCO: 3.1.3M Trans Leak Detect Syss	Controls based on Reanalyzed Accident for W058 Project

Table D-3. Safety SSCs and TSRs for Potentially Severe (E3 and E2) Environmental Consequences. (53 sheets)

ID	Hazardous Conditions	Cause	Prev SSC	Prev TSR	Mit SSC	Mit TSR	Control MEMO
RCSTS-15/16-INTEG01a	Release of radioactive slurry to the soil surface from the underground piping between the SY-A or SY-B valve pit and a diversion box due to piping system leak.	Failure of primary and encasement piping due to corrosion	SC: Transfer Piping SC: Pipe Encasement	None Required	SC: Trans Leak Detect Syss SS: Tank Level Detection Syss	AC: 5.12M Transr Cntrls: - Material balance AC: 5.14 Emerg Prep LCO: 3.1.3M Trans Leak Detect Syss	Controls based on Reanalyzed Accident for W058 Project
RCSTS-15/16-INTEG01b	Release of radioactive slurry to the soil surface from the underground piping between the SY-A or SY-B valve pit and a diversion box due to piping system leak.	Failure of primary and encasement piping due to unrecognized material flaw	SC: Transfer Piping SC: Pipe Encasement	None Required	SC: Trans Leak Detect Syss SS: Tank Level Detection Syss	AC: 5.12M Transr Cntrls: - Material balance AC: 5.14 Emerg Prep LCO: 3.1.3M Trans Leak Detect Syss	Controls based on Reanalyzed Accident for W058 Project
RCSTS-15/16-INTEG02	Release of radioactive slurry to the soil surface from the underground piping between the SY-A or SY-B valve pit and the diversion box due to piping system leak.	Failure of primary and encasement piping due to external event (excavation accident)	SC: Transfer Piping SC: Pipe Encasement	AC: 5.17 Excavation Controls	SS: Trans Leak Detection Sys SS: Tank Level Detection Syss	AC: 5.12M Transr Cntrls: - Material balance AC: 5.14 Emerg Prep LCO: 3.1.3M Trans Leak Detect Syss	Controls based on Reanalyzed Accident for W058 Project
RCSTS-15/16-INTEG03a	Release of radioactive slurry to the soil surface from the underground piping between the SY-A or SY-B valve pit and a diversion box due to piping system leak.	Failure of primary and encasement piping due to external event (undermining from broken fluid transfer lines in vicinity)	SC: Press Switch Interlocks/alarms (water service line) SC: Transfer Piping SC: Pipe Encasement	LCO: 3.1.2M Service Water Press Detection Sys	SC: Trans Leak Detection Syss SS: Tank Level Detection Syss	LCO: 3.1.3M Trans Leak Detect Syss AC: 5.12M Transr Cntrls: - Material balance AC: 5.14 Emerg Prep LCO: 3.1.3M Trans Leak Detect Syss	Controls based on Reanalyzed Accident for W058 Project

Table D-3. Safety SSCs and TSRs for Potentially Severe (E3 and E2) Environmental Consequences. (53 sheets)

ID	Hazardous Conditions	Cause	Prev SSC	Prev TSR	Mit SSC	Mit TSR	Control MEMO
RCSTS-15/16-INTEGO3b	Release of radioactive slurry to the soil surface from overflow of diversion box due to piping system leak.	Failure of piping due to external event (undermining from broken fluid transfer lines in vicinity)	SC: Trans Leak Detect Sys	LCO: 3.1.3M Trans Leak Detect Syss	SC: Entry Doors SC: Diversion Box Struct SS: Tank Level Detect Syss	LCO: 3.1.1M Trans Sys Cover/Entry Doors AC: 5.12M Trans Contrls: - Material Balance AC: 5.14 Emerg Prep AC: 5.22M Trans Sys cover removal/entry door closure cntrls LCO: 3.1.3M Trans Leak Detect Syss	Controls based on Reanalyzed Accident for W058 Project
RCSTS-15/16-INTEGO4	Release of radioactive slurry to the soil surface from the underground piping between the SY-A or SY-B valve pit and the diversion box due to piping system leak.	Failure of primary and encasement piping due to seismic event	None required	None Required	None required	AC: Emergency Preparedness	Controls based on Original BIO Accident Analysis
RCSTS-15/16-INTEGO5	Release of radioactive slurry to the soil surface from the underground piping between the SY-A or SY-B valve pit and a diversion box due to piping system leak.	Failure of primary and encasement piping due to external event (airplane crash, volcanism, etc)	None Required	None Required	None Required	AC: 5.14 Emerg Prep	No controls required based on the TWRS BIO
RCSTS-15/16-TEMPO1	Release of radioactive slurry to the soil surface from the underground piping between the SY-A or SY-B valve pit and a diversion box due to piping system leak.	Failure of primary and encasement piping due to freezing	SC: Transfer Piping SC: Pipe Encasement	None	SC: Trans Leak Detect Syss SS: Tank Level Detection Syss	AC: 5.12M Transr Cntrls: - Material balance AC: 5.14 Emerg Prep LCO: 3.1.3M Trans Leak Detect Syss	Controls based on Reanalyzed Accident for W058 Project

Table D-3. Safety SSCs and TSRs for Potentially Severe (E3 and E2) Environmental Consequences. (53 sheets)

ID	Hazardous Conditions	Cause	Prev SSC	Prev TSR	Mit SSC	Mit TSR	Control MEMO
RCSTS-18/19-INTEG01	Release of radioactive slurry to the soil from the underground piping between the diversion box and the vent station due to piping system leak.	Failure of primary and encasement piping due to external event (undermining from broken fluid transfer lines in vicinity)	SC: Press Switch Interlocks/alarms (water service line) SC: Transfer Piping SC: Pipe Encasement	LCO: 3.1.2M Service Water Press Detection Sys	SS: Trans Leak Detection Sys SS: Tank Level Detection Syss	LCO: 3.1.3M Trans Leak Detect Syss AC: 5.12M Transr Cntrls: - Material balance AC: 5.14 Emerg Prep	Controls based on Reanalyzed Accident for W058 Project
RCSTS-18/19-INTEG02	Release of radioactive slurry to the soil from the underground piping between the diversion box and the vent station due to piping system leak.	Failure of primary and encasement piping due to corrosion	SC: Transfer Piping SC: Pipe Encasement	None Required	SS: Trans Leak Detect Sys SS: Tank Level Detection Syss	AC: 5.12M Transr Cntrls: - Material balance AC: 5.14 Emerg Prep LCO: 3.1.3M Trans Leak Detect Syss	Controls based on Reanalyzed Accident for W058 Project
RCSTS-18/19-INTEG03a	Release of radioactive slurry to the soil from the underground piping between the diversion box and the vent station due to piping system leak.	Failure of primary and encasement piping due to external event (excavation accident)	SC: Transfer Piping SC: Pipe Encasement	AC: 5.17 Excavation Controls	SS: Trans Leak Detection Sys SS: Tank Level Detection Syss	LCO: 3.1.3M Trans Leak Detect Syss AC: 5.12M Transr Cntrls: - Material balance AC: 5.14 Emerg Prep	Controls based on Reanalyzed Accident for W058 Project
RCSTS-18/19-INTEG03b*	Release of radioactive slurry to the atmosphere from the underground piping between the diversion box and the vent station due to excavation of piping system and subsequent leak.	Failure of primary and encasement piping due to external event (excavation accident)	None required	AC: 5.17 Excavation Cntrls - Excavation permit - Coordination of transfers - Aboveground Labeling of Trans Lines - Restrictions on transfers	None required	AC: 5.17 Excavation Cntrls - Surveillance of all transfer lines with transfer in progress	Controls based on Reanalyzed Accident for W058 Project
RCSTS-18/19-INTEG04	Release of radioactive slurry to the soil from the underground piping between the diversion box and the vent station due to piping system leak.	Failure of primary and encasement piping due to external event (airplane crash, volcanism etc)	None Required	None Required	None Required	AC: 5.14 Emerg Prep	No controls required based on the TWRS BIO

Table D-3. Safety SSCs and TSRs for Potentially Severe (E3 and E2) Environmental Consequences. (53 sheets)

ID	Hazardous Conditions	Cause	Prev SSC	Prev TSR	Mit SSC	Mit TSR	Control MEMO
RCSTS-18/19-INTEG05	Release of radioactive slurry to the soil from the underground piping between the diversion box and the vent station due to piping system leak.	Failure of primary and encasement piping due to flammable gas explosion in primary piping	None required	AC: Ign Cntrls - Cntrls sparking - Cntrls electrostatic ign sources - Polymer material cntrls - Surface temp for equip contact waste - NFPA 70 Class 1 Div 1 & 2 requirements - Purged and pres equip cntrls AC: 5.11 Flam Gas Mon Cntrl	SS: Trans Leak Detect Sys	LCO: 3.1.3M Trans Leak Detect Syss AC: 5.14 Emerg Prep	Controls based on Original BIO Accident Analysis
RCSTS-18/19-INTEG06	Release of radioactive slurry to the soil from the underground piping between the diversion box and the vent station due to piping system leak.	Failure of primary and encasement piping due to unrecognized material flaw	SC: Transfer Piping SC: Pipe Encasement	None Required	SS: Trans Leak Detect Sys SS: Tank Level Detection Syss	AC: 5.12M Transr Cntrls: - Material balance AC: 5.14 Emerg Prep LCO: 3.1.3M Trans Leak Detect Syss	Controls based on Reanalyzed Accident for W058 Project
RCSTS-18/19-INTEG07	Release of radioactive slurry to the soil from the underground piping between the diversion box and the vent station due to piping system leak.	Failure of primary and encasement piping due to seismic event	None required	None Required	None required	AC: Emergency Preparedness	Controls based on Original BIO Accident Analysis
RCSTS-18/19-PRES01	Release of radioactive slurry to the soil from the underground piping between the diversion box and the vent station due to piping system leak.	Failure of primary and encasement piping due to water hammer	SC: Transfer Piping SC: Pipe Encasement	None	SC: Trans Leak Detect Syss SS: Tank Level Detection Syss	AC: 5.12M Transr Cntrls: - Material balance AC: 5.14 Emerg Prep LCO: 3.1.3M Trans Leak Detect Syss	Controls based on Reanalyzed Accident for W058 Project

Table D-3. Safety SSCs and TSRs for Potentially Severe (E3 and E2) Environmental Consequences. (53 sheets)

ID	Hazardous Conditions	Cause	Prev SSC	Prev TSR	Mit SSC	Mit TSR	Control MEMO
RCSTS-18/19-TEMP01	Release of radioactive slurry to the soil from the underground piping between the diversion box and the vent station due to piping system leak.	Failure of primary piping and encasement due to freezing	SC: Transfer Piping SC: Pipe Encasement	None	SC: Trans Leak Detect Syss SS: Tank Level Detection Syss	AC: 5.12M Transr Cntrls: - Material balance AC: 5.14 Emerg Prep LCO: 3.1.3M Trans Leak Detect Syss	Controls based on Reanalyzed Accident for W058 Project
RCSTS-18/19-TEMP02	Release of radioactive slurry to the soil from the underground piping between the diversion box and the vent station due to piping system leak.	Failure of primary and encasement piping due to thermal stress	SC: Transfer Piping SC: Pipe Encasement	None	SC: Trans Leak Detect Syss SS: Tank Level Detection Syss	AC: 5.12M Transr Cntrls: - Material balance AC: 5.14 Emerg Prep LCO: 3.1.3M Trans Leak Detect Syss	Controls based on Reanalyzed Accident for W058 Project
RCSTS-1FS-LEVEL03	Release of caustic solution and radionuclides to the sump pit from the water flush tank due to over filling of tank.	Overfilling of flush tank from flow of radioactive waste from transfer line. Block valves open, valve limit switch and pressure switch fail and administrative control of raw water block valves fail	SC: Press Switch Interlocks/Alarms (water flush jumper) SC: Press Switch Interlocks/Alarms (water service lines) SC: Backflow Prevention Sys (water flush jumper)	AC: 5.12M Trans Cntrls: - Double valve isolation on intercon lines - Config Management - Route Verification	SS: Tank Level Detect Syss	LCO: 3.1.2M Service Water Pres Detection Syss AC: 5.12M Trans Cntrls: - Material Balance AC: 5.14 Emerg Prep	Controls based on Reanalyzed Accident for W058 Project
RCSTS-22-PRESS01*	Release of radioactive aerosols to the atmosphere caused by spray leak of slurry from 244-A Lift Station due to piping system leak.	Dead heading of flow through the 244-A Lift Station with failure of PRV and development of crack in downstream piping	SC: Press Relief Sys SC: Rupture Disk	LCO: 3.1.5M Pressure Relief and Rupture Disks	SS: Trans Sys Covers	LCO: 3.1.1M Trans Sys Cover AC: 5.14 Emerg Prep AC: 5.22M Trans Sys cover removal	Controls based on Reanalyzed Accident for W058 Project

Table D-3. Safety SSCs and TSRs for Potentially Severe (E3 and E2) Environmental Consequences. (53 sheets)

ID	Hazardous Conditions	Cause	Prev SSC	Prev TSR	Mit SSC	Mit TSR	Control MEMO
RCSTS-22-PRESS02*	Release of radioactive aerosols to the atmosphere caused by spray leak of supernate from 244-A Lift Station due to piping system leak.	Dead heading of flow through the 244-A Lift Station with failure of PRV and development of crack in downstream piping	SC: Press Relief Sys SC: Rupture Disk	LCO: 3.1.5M Pressure Relief and Rupture Disks	SS: Trans Sys Covers	LCO: 3.1.1M Trans Sys Cover AC: 5.14 Emerg Prep AC: 5.22M Trans Sys cover removal	Controls based on Reanalyzed Accident for W058 Project
RCSTS-22-PRESS03*	Release of radioactive supernate to soil surface from overflow of 244-A Lift Station due to piping break.	Dead heading of flow through the 244-A Lift Station with failure of PRV and subsequent downstream pipe failure	SC: Trans Leak Detect Syss SC: Press Relief Sys SC: Rupture Disk	LCO: 3.1.3M Trans Leak Detect Syss	SS: Tank Level Detect Syss SC: Trans Leak Detect Syss	LCO: 3.1.1M Trans Sys Cover AC: 5.12M Trans Contrls: - Material Balance AC: 5.14 Emerg Prep AC: 5.22M Trans Sys cover removal LCO: 3.1.3M Trans Leak Detect Syss	Controls based on Reanalyzed Accident for W058 Project
RCSTS-22-PRESS04*	Release of radioactive slurry to soil surface from overflow of 244-A Lift Station due to piping break.	Dead heading of flow through the 244-A Lift Station with failure of PRV and subsequent downstream pipe failure	SC: Trans Leak Detect Syss SC: Press Relief Sys SC: Rupture Disk	LCO: 3.1.3M Trans Leak Detect Syss	SS: Tank Level Detect Syss SC: Trans Leak Detect Syss	LCO: 3.1.1M Trans Sys Cover AC: 5.12M Trans Contrls: - Material Balance AC: 5.14 Emerg Prep AC: 5.22M Trans Sys cover removal LCO: 3.1.3M Trans Leak Detect Syss	Controls based on Reanalyzed Accident for W058 Project

Table D-3. Safety SSCs and TSRs for Potentially Severe (E3 and E2) Environmental Consequences. (53 sheets)

ID	Hazardous Conditions	Cause	Prev SSC	Prev TSR	Mit SSC	Mit TSR	Control MEMO
RCSTS-24-FLOW/INTEG01	Release of radioactive slurry to soil surface from overflow of lift station due to piping system leak.	Failure of jumper due to corrosion	SC: Trans Leak Detect Syss	AC: 5.12M Trans Cntrls: - Jumper Leak Testing LCO: 3.1.3M Trans Leak Detect Syss	SS: Tank Level Detect Syss SS: Trans Sys Covers SC: Trans Leak Detect Syss	LCO: 3.1.1M Trans Sys Cover AC: 5.12M Trans Cntrls: - Material Balance - Pit floor drains open AC: 5.22M Trans Sys cover removal AC: 5.14 Emerg Prep LCO: 3.1.3M Trans Leak Detect Syss	LCO: 3.1.1M Trans Sys Cover AC: 5.12M Trans Cntrls: - Material Balance - Pit floor drains open AC: 5.22M Trans Sys cover removal AC: 5.14 Emerg Prep LCO: 3.1.3M Trans Leak Detect Syss
RCSTS-24-FLOW/INTEG02	Release of radioactive supernate to soil surface from overflow of 244-A Lift Station due to piping system leak.	Failure of jumper due to corrosion	SC: Trans Leak Detect Syss	AC: 5.12M Trans Cntrls: - Jumper Leak Testing LCO: 3.1.3M Trans Leak Detect Syss	SS: Tank Level Detect Syss SS: Trans Sys Covers SC: Trans Leak Detect Syss	LCO: 3.1.1M Trans Sys Cover AC: 5.12M Trans Cntrls: - Material Balance - Pit floor drains open AC: 5.22M Trans Sys cover removal AC: 5.14 Emerg Prep LCO: 3.1.3M Trans Leak Detect Syss	LCO: 3.1.1M Trans Sys Cover AC: 5.12M Trans Cntrls: - Material Balance - Pit floor drains open AC: 5.22M Trans Sys cover removal AC: 5.14 Emerg Prep LCO: 3.1.3M Trans Leak Detect Syss

Table D-3. Safety SSCs and TSRs for Potentially Severe (E3 and E2) Environmental Consequences. (53 sheets)

ID	Hazardous Conditions	Cause	Prev SSC	Prev TSR	Mit SSC	Mit TSR	Control MEMO
RCSTS-24-FLOW/INTEG03	Release of radioactive slurry to soil surface from overflow of lift station due to piping system leak.	Failure of jumper due to gasket failure	SC: Trans Leak Detect Syss	AC: 5.12M Trans Cntrls: - Jumper Leak Testing LCO: 3.1.3M Trans Leak Detect Syss	SS: Tank Level Detect Syss SS: Trans Sys Covers SC: Trans Leak Detect Syss	LCO: 3.1.1M Trans Sys Cover AC: 5.12M Trans Cntrls: - Material Balance - Pit floor drains open AC: 5.22M Trans Sys cover removal AC: 5.14 Emerg Prep LCO: 3.1.3M Trans Leak Detect Syss	Controls based on Reanalyzed Accident for W058 Project
RCSTS-24-FLOW/INTEG04	Release of radioactive supernate to soil surface from overflow of 244-A Lift Station due to piping system leak.	Failure of jumper due to gasket failure	SC: Trans Leak Detect Syss	AC: 5.12M Trans Cntrls: - Jumper Leak Testing LCO: 3.1.3M Trans Leak Detect Syss	SS: Tank Level Detect Syss SS: Trans Sys Covers SC: Trans Leak Detect Syss	LCO: 3.1.1M Trans Sys Cover AC: 5.12M Trans Cntrls: - Material Balance - Pit floor drains open AC: 5.22M Trans Sys cover removal AC: 5.14 Emerg Prep LCO: 3.1.3M Trans Leak Detect Syss	Controls based on Reanalyzed Accident for W058 Project
RCSTS-24-FLOW/INTEG05	Release of radioactive slurry to soil surface from overflow of lift station due to piping system leak.	Failure of jumper due to misalignment	SC: Trans Leak Detect Syss	AC: 5.12M Trans Cntrls: - Jumper Leak Testing LCO: 3.1.3M Trans Leak Detect Syss	SS: Trans Sys Covers SS: Tank Level Detect Syss SC: Trans Leak Detect Syss	LCO: 3.1.1M Trans Sys Cover AC: 5.12M Trans Cntrls: - Material Balance - Pit floor drains open AC: 5.14 Emerg Prep AC: 5.22M Trans Sys cover removal LCO: 3.1.3M Trans Leak Detect Syss	Controls based on Reanalyzed Accident for W058 Project

Table D-3. Safety SSCs and TSRs for Potentially Severe (E3 and E2) Environmental Consequences. (53 sheets)

ID	Hazardous Conditions	Cause	Prev SSC	Prev TSR	Mit SSC	Mit TSR	Control MEMO
RCSTS-24-FLOW/INTEG06	Release of radioactive supernate to soil surface from overflow of 244-A Lift Station due to piping system leak.	Failure of jumper due to misalignment	SC: Trans Leak Detect Syss	AC: 5.12M Trans Cntrls: - Jumper Leak Testing LCO: 3.1.3M Trans Leak Detect Syss	SS: Trans Sys Covers SS: Tank Level Detect Syss SC: Trans Leak Detect Syss	LCO: 3.1.1M Trans Sys Cover AC: 5.12M Trans Cntrls: - Material Balance - Pit floor drains open AC: 5.14 Emerg Prep AC: 5.22M Trans Sys cover removal LCO: 3.1.3M Trans Leak Detect Syss	Controls based on Reanalyzed Accident for W058 Project
RCSTS-24-FLOW/INTEG07	Release of radioactive aerosols to the atmosphere caused by spray leak of slurry from lift station due to piping system leak.	Failure of jumper due to corrosion	None Required	AC: 5.12M Trans Cntrls: - Jumper Leak Testing	SS: Trans Sys Covers	LCO: 3.1.1M Trans Sys Cover AC: 5.22M Trans Sys cover removal AC: 5.14 Emerg Prep	Controls based on Reanalyzed Accident for W058 Project
RCSTS-24-FLOW/INTEG08	Release of radioactive aerosols to the atmosphere caused by spray leak of supernate from lift station due to piping system leak.	Failure of jumper due to corrosion	None Required	AC: 5.12M Trans Cntrls: - Jumper Leak Testing	SS: Trans Sys Covers	LCO: 3.1.1M Trans Sys Cover AC: 5.22M Trans Sys cover removal AC: 5.14 Emerg Prep	Controls based on Reanalyzed Accident for W058 Project
RCSTS-24-FLOW/INTEG09	Release of radioactive aerosols to the atmosphere caused by spray leak of slurry from lift station due to piping system leak.	Failure of jumper due to gasket failure	None Required	AC: 5.12M Trans Cntrls: - Jumper Leak Testing	SS: Trans Sys Covers	LCO: 3.1.1M Trans Sys Cover AC: 5.22M Trans Sys cover removal AC: 5.14 Emerg Prep	Controls based on Reanalyzed Accident for W058 Project
RCSTS-24-FLOW/INTEG10	Release of radioactive aerosols to the atmosphere caused by spray leak of supernate from lift station due to piping system leak.	Failure of jumper due to gasket failure	None Required	AC: 5.12M Trans Cntrls: - Jumper Leak Testing	SS: Trans Sys Covers	LCO: 3.1.1M Trans Sys Cover AC: 5.22M Trans Sys cover removal AC: 5.14 Emerg Prep	Controls based on Reanalyzed Accident for W058 Project

Table D-3. Safety SSCs and TSRs for Potentially Severe (E3 and E2) Environmental Consequences. (53 sheets)

ID	Hazardous Conditions	Cause	Prev SSC	Prev TSR	Mit SSC	Mit TSR	Control MEMO
RCSTS-24-FLOW/INTEG11	Release of radioactive aerosols to the atmosphere caused by spray leak of slurry from lift station due to piping system leak.	Failure of jumper due to misalignment	None Required	AC: 5.12M Trans Cntrls: - Jumper Leak Testing	SS: Trans Sys Covers	LCO: 3.1.1M Trans Sys Cover AC: 5.14 Emerg Prep AC: 5.22M Trans Sys cover removal	Controls based on Reanalyzed Accident for W058 Project
RCSTS-24-FLOW/INTEG12	Release of radioactive aerosols to the atmosphere caused by spray leak of supernate from lift station due to piping system leak.	Failure of jumper due to misalignment	None Required	AC: 5.12M Trans Cntrls: - Jumper Leak Testing	SS: Trans Sys Covers	LCO: 3.1.1M Trans Sys Cover AC: 5.14 Emerg Prep AC: 5.22M Trans Sys cover removal	Controls based on Reanalyzed Accident for W058 Project
RCSTS-24-FLOW01	Release of radioactive slurry to soil surface from overflow of lift station due to piping system leak.	Computer failure or human error causing misrouting of material when flow path is not completely connected	SC: Trans Leak Detect Syss	AC: 5.12M Trans Cntrls: - Double valve isolation on intercon lines - Config Management - Route Verification - Caps/blanks on open nozzles AC: 5.20 Trans Pump admin lock cntrls LCO: 3.1.3M Trans Leak Detect Syss	SS: Trans Sys Covers SS: Tank Level Detect Syss SC: Trans Leak Detect Syss	LCO: 3.1.1M Trans Sys Cover AC: 5.12M Trans Cntrls: - Material Balance - Pit floor drains open AC: 5.14 Emerg Prep AC: 5.22M Trans Sys cover removal LCO: 3.1.3M Trans Leak Detect Syss	Controls based on Reanalyzed Accident for W058 Project
RCSTS-24-FLOW02	Release of radioactive supernate to soil surface from overflow of 244-A Lift Station due to piping system leak.	Computer failure or human error causing misrouting of material when flow path is not completely connected	SC: Trans Leak Detect Syss	AC: 5.12M Trans Cntrls: - Double valve isolation on intercon lines - Config Management - Route Verification - Caps/blanks on open nozzles AC: 5.20 Trans Pump admin lock cntrls LCO: 3.1.3M Trans Leak Detect Syss	SS: Trans Sys Covers SS: Tank Level Detect Syss SC: Trans Leak Detect Syss	LCO: 3.1.1M Trans Sys Cover AC: 5.12M Trans Cntrls: - Material Balance - Pit floor drains open AC: 5.14 Emerg Prep AC: 5.22M Trans Sys cover removal LCO: 3.1.3M Trans Leak Detect Syss	Controls based on Reanalyzed Accident for W058 Project

Table D-3. Safety SSCs and TSRs for Potentially Severe (E3 and E2) Environmental Consequences. (53 sheets)

ID	Hazardous Conditions	Cause	Prev SSC	Prev TSR	Mit SSC	Mit TSR	Control MEMO
RCSTS-24-FLOW03	Release of radioactive slurry to soil surface from overflow of lift station due to piping system leak.	External leak of valve or valves to the lift station	SC: Trans Leak Detect Syss	LCO: 3.1.3M Trans Leak Detect Syss	SS: Tank Level Detect Syss SS: Trans Sys Covers SC: Trans Leak Detect Syss	LCO: 3.1.1M Trans Sys Cover AC: 5.12M Trans Cntrls: - Material Balance AC: 5.14 Emerg Prep AC: 5.22M Trans Sys cover removal LCO: 3.1.3M Trans Leak Detect Syss	Controls based on Reanalyzed Accident for W058 Project
RCSTS-24-FLOW04	Release of radioactive supernate to soil surface from overflow of 244-A Lift Station due to piping system leak.	External leak of valve or valves to the lift station	SC: Trans Leak Detect Syss	LCO: 3.1.3M Trans Leak Detect Syss	SS: Tank Level Detect Syss SS: Trans Sys Covers SC: Trans Leak Detect Syss	LCO: 3.1.1M Trans Sys Cover AC: 5.12M Trans Cntrls: - Material Balance AC: 5.14 Emerg Prep AC: 5.22M Trans Sys cover removal LCO: 3.1.3M Trans Leak Detect Syss	Controls based on Reanalyzed Accident for W058 Project
RCSTS-24-FLOW05	Release of radioactive aerosols to the atmosphere caused by spray leak of slurry from lift station due to piping system leak.	Computer failure or human error causing misrouting of material when flow path is not completely connected	None Required	AC: 5.12M Trans Cntrls: - Double valve isolation on intercon lines - Config Management - Route Verification - Caps/blanks on open nozzles AC: 5.20 Trans Pump admin lock cntrls	SS: Trans Sys Covers	LCO: 3.1.1M Trans Sys Cover AC: 5.14 Emerg Prep AC: 5.22M Trans Sys cover removal	Controls based on Reanalyzed Accident for W058 Project

Table D-3. Safety SSCs and TSRs for Potentially Severe (E3 and E2) Environmental Consequences. (53 sheets)

ID	Hazardous Conditions	Cause	Prev SSC	Prev TSR	Mit SSC	Mit TSR	Control MEMO
RCSTS-24-FLOW06	Release of radioactive aerosols to the atmosphere caused by spray leak of supernate from lift station due to piping system leak.	Computer failure or human error causing misrouting of material when flow path is not completely connected	None Required	AC: 5.12M Trans Cntrls: - Double valve isolation on intercon lines - Config Management - Route Verification - Caps/blanks on open nozzles AC: 5.20 Trans Pump admin lock cntrls	SS: Trans Sys Covers	LCO: 3.1.1M Trans Sys Cover AC: 5.14 Emerg Prep AC: 5.22M Trans Sys cover removal	Controls based on Reanalyzed Accident for W058 Project
RCSTS-24-FLOW07	Release of radioactive aerosols to the atmosphere caused by spray leak of slurry from lift station due to piping system leak.	External leak of valve or valves to the lift station	None Required	None Required	SS: Trans Sys Covers	LCO: 3.1.1M Trans Sys Cover AC: 5.14 Emerg Prep AC: 5.22M Trans Sys cover removal	Controls based on Reanalyzed Accident for W058 Project
RCSTS-24-FLOW08	Release of radioactive aerosols to the atmosphere caused by spray leak of supernate from lift station due to piping system leak.	External leak of valve or valves to the lift station	None Required	None Required	SS: Trans Sys Covers	LCO: 3.1.1M Trans Sys Cover AC: 5.14 Emerg Prep AC: 5.22M Trans Sys cover removal	Controls based on Reanalyzed Accident for W058 Project
RCSTS-24-INTEG01	Release of radioactive slurry to soil surface from overflow of lift station due to piping system leak.	External event (airplane crash, etc)	None Required	None Required	None Required	AC: 5.14 Emerg Prep	No controls required based on the TWRS BIO
RCSTS-24-INTEG02	Release of radioactive supernate to soil surface from overflow of 244-A Lift Station due to piping system leak.	External event (airplane crash, etc)	None Required	None Required	None Required	AC: 5.14 Emerg Prep	No controls required based on the TWRS BIO

Table D-3. Safety SSCs and TSRs for Potentially Severe (E3 and E2) Environmental Consequences. (53 sheets)

ID	Hazardous Conditions	Cause	Prev SSC	Prev TSR	Mit SSC	Mit TSR	Control MEMO
RCSTS-24-INTEG03	Release of radioactive aerosols to the atmosphere from the lift station due to fire or explosion of flammable gas.	Fire or explosion in the lift station caused by buildup of flammable gas because of spill of supernate or slurry	None required	AC: Ign Cntrls - Cntrls sparking - Cntrls electrostatic ign sources - Polymer material cntrls - Surface temp for equip contact waste - NFPA 70 Class 1 Div 1 & 2 requirements - Purged and pres equip cntrls AC: 5.11 Flam Gas Mon Cntrl	None Required	AC: Emerg Prep	Controls based on Original BIO Accident Analysis
RCSTS-24-INTEG04	Release of radioactive slurry to soil surface from overflow of lift station due to piping system leak.	Seismic event	None required	None Required	None required	AC: Emergency Preparedness	Controls based on Original BIO Accident Analysis
RCSTS-24-INTEG05	Release of radioactive supernate to soil surface from overflow of 244-A Lift Station due to piping system leak.	Seismic event	None required	None Required	None required	AC: Emergency Preparedness	Controls based on Original BIO Accident Analysis
RCSTS-24-INTEG06	Release of radioactive aerosols to the atmosphere from the lift station due to fire or explosion of flammable gas.	Fire or explosion due to leakage of flammable gas due to pipe breach in slurry line caused by gas release from slurry	None required	AC: Ign Cntrls - Cntrls sparking - Cntrls electrostatic ign sources - Polymer material cntrls - Surface temp for equip contact waste - NFPA 70 Class 1 Div 1 & 2 requirements - Purged and pres equip cntrls AC: 5.11 Flam Gas Mon Cntrl	None Required	AC: Emerg Prep	Controls based on Original BIO Accident Analysis

Table D-3. Safety SSCs and TSRs for Potentially Severe (E3 and E2) Environmental Consequences. (53 sheets)

ID	Hazardous Conditions	Cause	Prev SSC	Prev TSR	Mit SSC	Mit TSR	Control MEMO
RCSTS-24-INTEG07	Release of radioactive aerosols to the atmosphere caused by spray leak of slurry from lift station due to piping system leak.	External event (airplane crash, etc)	None Required	None Required	None Required	AC: 5.14 Emerg Prep	No controls required based on the TWRS BIO
RCSTS-24-INTEG08	Release of radioactive aerosols to the atmosphere caused by spray leak of supernate from lift station due to piping system leak.	External event (airplane crash, etc)	None Required	None Required	None Required	AC: 5.14 Emerg Prep	No controls required based on the TWRS BIO
RCSTS-24-INTEG09	Release of radioactive aerosols to the atmosphere caused by spray leak of slurry from lift station due to piping system leak.	Seismic event	None required	None Required	None required	AC: Emergency Preparedness	Controls based on Original BIO Accident Analysis
RCSTS-24-INTEG10	Release of radioactive aerosols to the atmosphere caused by spray leak of supernate from lift station due to piping system leak.	Seismic event	None required	None Required	None required	AC: Emergency Preparedness	Controls based on Original BIO Accident Analysis
RCSTS-24-PRES01	Release of radioactive supernate to soil surface from overflow of 244-A Lift Station due to piping system leak.	Steam hammer or thermal stress caused by loss of flushwater flow to steam mixing chamber in east area	SC: Trans Leak Detect Syss	AC: 5.12M Trans Cntrls: - Config Management - Route Verification LCO: 3.1.3M Trans Leak Detect Syss	SS: Tank Level Detect Syss SS: Trans Sys Covers SC: Trans Leak Detect Syss	LCO: 3.1.1M Trans Sys Cover AC: 5.12M Trans Cntrls: - Material Balance - Pit floor drains open AC: 5.22M Trans Sys cover removal AC: 5.14 Emerg Prep LCO: 3.1.3M Trans Leak Detect Syss	Controls based on Reanalyzed Accident for W058 Project

Table D-3. Safety SSCs and TSRs for Potentially Severe (E3 and E2) Environmental Consequences. (53 sheets)

ID	Hazardous Conditions	Cause	Prev SSC	Prev TSR	Mit SSC	Mit TSR	Control MEMO
RCSTS-24-PRES02	Release of radioactive slurry to soil surface from overflow of lift station due to piping system leak.	Water hammer	SC: Trans Leak Detect Syss SC: Press Relief Sys SC: Rupture Disk	AC: 5.12M Trans Cntrls: - Config Management - Route Verification LCO: 3.1.3M Trans Leak Detect Syss LCO: 3.1.5M Press Relief and Rupture Disk	SS: Tank Level Detect Syss SS: Trans Sys Covers SC: Trans Leak Detect Syss	LCO: 3.1.1M Trans Sys Cover AC: 5.12M Trans Cntrls: - Material Balance - Pit floor drains open AC: 5.22M Trans Sys cover removal AC: 5.14 Emerg Prep LCO: 3.1.3M Trans Leak Detect Syss	Controls based on Reanalyzed Accident for W058 Project
RCSTS-24-PRES03	Release of radioactive supernate to soil surface from overflow of 244-A Lift Station due to piping system leak.	Water hammer	SC: Trans Leak Detect Syss SC: Press Relief Sys SC: Rupture Disk	AC: 5.12M Trans Cntrls: - Config Management - Route Verification LCO: 3.1.3M Trans Leak Detect Syss LCO: 3.1.5M Press Relief and Rupture Disk	SS: Tank Level Detect Syss SS: Trans Sys Covers SC: Trans Leak Detect Syss	LCO: 3.1.1M Trans Sys Cover AC: 5.12M Trans Cntrls: - Material Balance - Pit floor drains open AC: 5.22M Trans Sys cover removal AC: 5.14 Emerg Prep LCO: 3.1.3M Trans Leak Detect Syss	Controls based on Reanalyzed Accident for W058 Project
RCSTS-2FS-FLOW01	Release of caustic solution spray to the atmosphere from the water flush system due to a transfer line break.	Line break (upstream of flush pump) due to structural failure	None Required	AC: 5.23 Caustic Transfer Cntrls	None required	AC: 5.23 Caustic Transfer Cntrls	Controls based on Original BIO Accident Analysis
RCSTS-2FS-FLOW02	Release of caustic solution spray to the atmosphere from the water flush system due to a transfer line break.	Line break (downstream of flush pump) due to structural failure	None Required	AC: 5.23 Caustic Transfer Cntrls	None required	AC: 5.23 Caustic Transfer Cntrls	Controls based on Original BIO Accident Analysis

Table D-3. Safety SSCs and TSRs for Potentially Severe (E3 and E2) Environmental Consequences. (53 sheets)

ID	Hazardous Conditions	Cause	Prev SSC	Prev TSR	Mit SSC	Mit TSR	Control MEMO
RCSTS-2FS-FLOW03	Release of caustic solution spray to the atmosphere from the water flush system due to a transfer line break.	Line plug - before heaters due to debris buildup causing a pressure buildup and failure of line	None Required	AC: 5.23 Caustic Transfer Cntrls	None required	AC: 5.23 Caustic Transfer Cntrls	Controls based on Original BIO Accident Analysis
RCSTS-2FS-FLOW04	Release of caustic solution spray to the atmosphere from the water flush system due to a transfer line break.	Line plug - after heaters due to debris buildup causing pressure buildup at the heater and resulting in heater pipe failure	None Required	AC: 5.23 Caustic Transfer Cntrls	None required	AC: 5.23 Caustic Transfer Cntrls	Controls based on Original BIO Accident Analysis
RCSTS-2FS-FLOW05	Release of caustic solution spray to the atmosphere from the water flush system due to a relief valve failure.	Caustic injection pressure relief valve failure	None Required	AC: 5.23 Caustic Transfer Cntrls	None required	AC: 5.23 Caustic Transfer Cntrls	Controls based on Original BIO Accident Analysis
RCSTS-2FS-FLOW07	Release of caustic solution spray to the atmosphere from the water flush system due to a transfer line break.	Flush line break due to structural failure	None Required	AC: 5.23 Caustic Transfer Cntrls	None required	AC: 5.23 Caustic Transfer Cntrls	Controls based on Original BIO Accident Analysis
RCSTS-2FS-PRES01	Release of caustic solution spray to the atmosphere from the water flush system due line plug.	Flush line plug - before heaters due to debris buildup causing a pressure buildup and failure of line	None Required	AC: 5.23 Caustic Transfer Cntrls	None required	AC: 5.23 Caustic Transfer Cntrls	Controls based on Original BIO Accident Analysis
RCSTS-2FS-PRES02	Release of caustic solution spray to the atmosphere from the water flush system due to a line plug.	Flush line plug - after heaters due to debris buildup causing pressure buildup at the heater and resulting in heater pipe failure	None Required	AC: 5.23 Caustic Transfer Cntrls	None required	AC: 5.23 Caustic Transfer Cntrls	Controls based on Original BIO Accident Analysis

Table D-3. Safety SSCs and TSRs for Potentially Severe (E3 and E2) Environmental Consequences. (53 sheets)

ID	Hazardous Conditions	Cause	Prev SSC	Prev TSR	Mit SSC	Mit TSR	Control MEMO
RCSTS-2FS-PRES03	Release of caustic solution spray to the atmosphere from the water flush system due to a line break.	Flush line break due to structural failure	None Required	AC: 5.23 Caustic Transfer Cntrls	None required	AC: 5.23 Caustic Transfer Cntrls	Controls based on Original BIO Accident Analysis
RCSTS-2FS-TEMP01	Release of caustic solution spray to the atmosphere from the water flush system due to a line plug.	Flush line plug - before heaters due to debris buildup causing a pressure buildup and failure of line	None Required	AC: 5.23 Caustic Transfer Cntrls	None required	AC: 5.23 Caustic Transfer Cntrls	Controls based on Original BIO Accident Analysis
RCSTS-2FS-TEMP02	Release of caustic solution spray to the atmosphere from the water flush system due to freezing conditions.	Freezing weather with loss of heat trace function	None Required	AC: 5.23 Caustic Transfer Cntrls	None required	AC: 5.23 Caustic Transfer Cntrls	Controls based on Original BIO Accident Analysis
RCSTS-4FS-FLOW03	Release of caustic to the atmosphere from the caustic system due to pressure relief valve failing open.	Pressure relief valve fails open	None Required	AC: 5.23 Caustic Transfer Cntrls	None required	AC: 5.23 Caustic Transfer Cntrls	Controls based on Original BIO Accident Analysis
RCSTS-4FS-FLOW04	Release of caustic to the atmosphere from the caustic system due to over pressurization of line and failure of pressure relief valve to open.	Back pressure valve fails in closed position	None Required	AC: 5.23 Caustic Transfer Cntrls	None required	AC: 5.23 Caustic Transfer Cntrls	Controls based on Original BIO Accident Analysis
RCSTS-4FS-FLOW05	Release of caustic to the atmosphere from the caustic system due to line failure in chemical injection package.	Line failure/leak due to structural failure	None Required	AC: 5.23 Caustic Transfer Cntrls	None required	AC: 5.23 Caustic Transfer Cntrls	Controls based on Original BIO Accident Analysis
RCSTS-4FS-FLOW06	Release of caustic to the atmosphere from the caustic system due to a caustic system drain valve leak.	Caustic drain valve leak	None Required	AC: 5.23 Caustic Transfer Cntrls	None required	AC: 5.23 Caustic Transfer Cntrls	Controls based on Original BIO Accident Analysis

Table D-3. Safety SSCs and TSRs for Potentially Severe (E3 and E2) Environmental Consequences. (53 sheets)

ID	Hazardous Conditions	Cause	Prev SSC	Prev TSR	Mit SSC	Mit TSR	Control MEMO
RCSTS-4FS-PRES/TEMP01	Release of caustic to the atmosphere from the caustic system due to pressure relief valve failing open.	Pressure relief valve fails open on caustic injection system.	None Required	AC: 5.23 Caustic Transfer Cntrls	None required	AC: 5.23 Caustic Transfer Cntrls	Controls based on Original BIO Accident Analysis
RCSTS-4FS-PRES/TEMP02	Release of caustic to the atmosphere from the caustic system due to pressure relief valve failing in closed position and rupture of line.	Back pressure relief valve fails in closed position.	None Required	AC: 5.23 Caustic Transfer Cntrls	None required	AC: 5.23 Caustic Transfer Cntrls	Controls based on Original BIO Accident Analysis
RCSTS-5FS-FLOW01	Release of caustic to the atmosphere from caustic line due to a line break.	Line break due to structural failure.	None Required	AC: 5.23 Caustic Transfer Cntrls	None required	AC: 5.23 Caustic Transfer Cntrls	Controls based on Original BIO Accident Analysis
RCSTS-5FS-FLOW02	Release of caustic to the atmosphere from caustic line due to a line break.	Line plug due to debris buildup causing pressure buildup resulting in pipe failure.	None Required	AC: 5.23 Caustic Transfer Cntrls	None required	AC: 5.23 Caustic Transfer Cntrls	Controls based on Original BIO Accident Analysis

This page intentionally left blank.

Table D-4. Defense In Depth Controls For Potential S3 and S2 Consequences. (23 sheets)

BIO Acc	ID	Hazardous Conditions	Cause	DID-Preventive	DID-Mitigative
01X	RCSTS-01-FLOW02	Release of radioactive aerosols and entrained solids to the atmosphere from Tank 241-SY-102 due to criticality.	Mistransfer of material containing organic extractant from east area via the supernate piping route	None	None
02X	RCSTS-08-FILTER01*	Release of residual contamination from Diversion Box 6241-A due to failure of inlet HEPA filter.	Tornado or high winds across inlet	None	Periodic Surveillance of HEPA HEPA filter Replacement
02X	RCSTS-08-FILTER02*	Release of residual contamination from Diversion Box 6241-A due to failure of inlet HEPA filter.	HEPA filter structural failure or seal failure	None	Periodic Surveillance of HEPA HEPA filter Replacement
02X	RCSTS-09-FILTER01*	Release of residual contamination from Vent Station 6241-V due to failure of inlet HEPA filter.	Tornado or high winds across inlet	None	Periodic Surveillance of HEPA HEPA filter Replacement
02X	RCSTS-09-FILTER02*	Release of residual contamination from Vent Station 6241-V due to failure of inlet HEPA filter.	HEPA filter structural failure or seal failure	None	Periodic Surveillance of HEPA HEPA filter Replacement
03X	RCSTS-03-TEMP01*	Release of radioactive material to the atmosphere from the SY valve pit due to fire in pit.	Fire in the pit caused by maintenance or electrical problem	Fire Protection Prog	Rad Prot Program Contamination Cntrl Prog
07X	RCSTS-10/11-INTEG02b*	Release of radioactive supernate to the soil subsurface from the underground piping between the diversion box and the vent station due to piping system leak.	Failure of primary and encasement piping due to corrosion	Operator Training Operating Procedures Press/Leak Testing Transfer Piping	Emergency Response Plan/Proc
07X	RCSTS-10/11-INTEG05b*	Release of radioactive supernate to the soil subsurface from the underground piping between the diversion box and the vent station due to piping system leak.	Failure of primary and encasement piping due to unrecognized material flaw	Operator Training Operating Procedures Press/Leak Testing Transfer Piping	Emergency Response Plan/Proc
07X	RCSTS-10/11-PRES01b*	Release of radioactive supernate to the soil subsurface from the underground piping between the diversion box and the vent station due to piping system leak.	Failure of primary and encasement piping due to water hammer	Operator Training Operating Procedures Press/Leak Testing Transfer Piping	Emergency Response Plan/Proc

Table D-4. Defense In Depth Controls For Potential S3 and S2 Consequences. (23 sheets)

BIO Acc	ID	Hazardous Conditions	Cause	DID-Preventive	DID-Mitigative
07X	RCSTS-12/13-INTEG02b*	Release of radioactive supernate to the soil subsurface from the underground piping between the vent station and the 244-A Lift Station due to piping system leak.	Failure of primary and encasement piping due to corrosion	Operator Training Operating Procedures Press/Leak Testing Transfer Piping	Emergency Response Plan/Proc
07X	RCSTS-12/13-INTEG05b*	Release of radioactive supernate to the soil subsurface from the underground piping between the vent station and the 244-A Lift Station due to piping system leak.	Failure of primary and encasement piping due to unrecognized material flaw	Operator Training Operating Procedures Press/Leak Testing Transfer Piping	Emergency Response Plan/Proc
07X	RCSTS-12/13-PRES01b*	Release of radioactive supernate to the soil subsurface from the underground piping between the vent station and the 244-A Lift Station due to piping system leak.	Failure of primary and encasement piping due to steam hammer caused by loss of flushwater flow to steam mixing chamber in east area	Operator Training Operating Procedures Press/Leak Testing Transfer Piping	Emergency Response Plan/Proc
09X	RCSTS-2FS-FLOW01	Release of caustic solution spray to the atmosphere from the water flush system due to a transfer line break.	Line break (upstream of flush pump) due to structural failure	Operator Training TWRS Hazardous Mat Protect Prog	Emergency Response
09X	RCSTS-2FS-FLOW02	Release of caustic solution spray to the atmosphere from the water flush system due to a transfer line break.	Line break (downstream of flush pump) due to structural failure	Operator Training TWRS Hazardous Mat Protect Prog	Emergency Response
09X	RCSTS-2FS-FLOW03	Release of caustic solution spray to the atmosphere from the water flush system due to a transfer line break.	Line plug - before heaters due to debris buildup causing a pressure buildup and failure of line	Operator Training TWRS Hazardous Mat Protect Prog	Emergency Response
09X	RCSTS-2FS-FLOW04	Release of caustic solution spray to the atmosphere from the water flush system due to a transfer line break.	Line plug - after heaters due to debris buildup causing pressure buildup at the heater and resulting in heater pipe failure	Operator Training TWRS Hazardous Mat Protect Prog	Emergency Response
09X	RCSTS-2FS-FLOW05	Release of caustic solution spray to the atmosphere from the water flush system due to a relief valve failure.	Caustic injection pressure relief valve failure	Operator Training TWRS Hazardous Mat Protect Prog	Emergency Response

Table D-4. Defense In Depth Controls For Potential S3 and S2 Consequences. (23 sheets)

BIO Acc	ID	Hazardous Conditions	Cause	DID-Preventive	DID-Mitigative
09X	RCSTS-2FS-FLOW07	Release of caustic solution spray to the atmosphere from the water flush system due to a transfer line break.	Flush line break due to structural failure	Operator Training TWRS Hazardous Mat Protect Prog	Emergency Response
09X	RCSTS-2FS-PRES01	Release of caustic solution spray to the atmosphere from the water flush system due line plug.	Flush line plug - before heaters due to debris buildup causing a pressure buildup and failure of line	Operator Training TWRS Hazardous Mat Protect Prog	Emergency Response
09X	RCSTS-2FS-PRES02	Release of caustic solution spray to the atmosphere from the water flush system due to a line plug.	Flush line plug - after heaters due to debris buildup causing pressure buildup at the heater and resulting in heater pipe failure	Operator Training TWRS Hazardous Mat Protect Prog	Emergency Response
09X	RCSTS-2FS-PRES03	Release of caustic solution spray to the atmosphere from the water flush system due to a line break.	Flush line break due to structural failure	Operator Training TWRS Hazardous Mat Protect Prog	Emergency Response
09X	RCSTS-2FS-TEMP01	Release of caustic solution spray to the atmosphere from the water flush system due to a line plug.	Flush line plug - before heaters due to debris buildup causing a pressure buildup and failure of line	Operator Training TWRS Hazardous Mat Protect Prog	Emergency Response
09X	RCSTS-2FS-TEMP02	Release of caustic solution spray to the atmosphere from the water flush system due to freezing conditions.	Freezing weather with loss of heat trace function	Operator Training TWRS Hazardous Mat Protect Prog	Emergency Response
09X	RCSTS-4FS-FLOW03	Release of caustic to the atmosphere from the caustic system due to pressure relief valve failing open.	Pressure relief valve fails open	Operator Training TWRS Hazardous Mat Protect Prog	Emergency Response
09X	RCSTS-4FS-FLOW04	Release of caustic to the atmosphere from the caustic system due to over pressurization of line and failure of pressure relief valve to open.	Back pressure valve fails in closed position	Operator Training TWRS Hazardous Mat Protect Prog	Emergency Response
09X	RCSTS-4FS-FLOW05	Release of caustic to the atmosphere from the caustic system due to line failure in chemical injection package.	Line failure/leak due to structural failure	Operator Training TWRS Hazardous Mat Protect Prog	Emergency Response

Table D-4. Defense In Depth Controls For Potential S3 and S2 Consequences. (23 sheets)

BIO Acc	ID	Hazardous Conditions	Cause	DID-Preventive	DID-Mitigative
09X	RCSTS-4FS-FLOW06	Release of caustic to the atmosphere from the caustic system due to a caustic system drain valve leak.	Caustic drain valve leak	Operator Training TWRS Hazardous Mat Protect Prog	Emergency Response
09X	RCSTS-4FS-PRES/TEMP01	Release of caustic to the atmosphere from the caustic system due to pressure relief valve failing open.	Pressure relief valve fails open on caustic injection system.	Operator Training TWRS Hazardous Mat Protect Prog	Emergency Response
09X	RCSTS-4FS-PRES/TEMP02	Release of caustic to the atmosphere from the caustic system due to pressure relief valve failing in closed position and rupture of line.	Back pressure relief valve fails in closed position.	Operator Training TWRS Hazardous Mat Protect Prog	Emergency Response
09X	RCSTS-5FS-FLOW01	Release of caustic to the atmosphere from caustic line due to a line break.	Line break due to structural failure.	Operator Training TWRS Hazardous Mat Protect Prog	Emergency Response
09X	RCSTS-5FS-FLOW02	Release of caustic to the atmosphere from caustic line due to a line break.	Line plug due to debris buildup causing pressure buildup resulting in pipe failure.	Operator Training TWRS Hazardous Mat Protect Prog	Emergency Response
11X	RCSTS-01-FLOW05	Release of ammonia to atmosphere from a fire or a gas release resulting in an explosion due to addition of inadequately diluted caustic.	Human error	Industrial Hygiene Program	None
12X	RCSTS-01-FLOW04	Release of radioactive aerosols/entrained solids and/or toxic gases to the atmosphere from Tank 241-SY-102 due to chemical reaction.	Mistransfer of incompatible material from east area via the supernate piping route.	Tank Farm Waste Compat Prog Waste Trans Proc Cntrls	None
14X	RCSTS-03-INTEG01	Release of radioactive aerosols to the atmosphere from the SY valve pit due to fire or explosion of flammable gas.	Fire or explosion in the valve pit caused by buildup of flammable gas because of spill of supernate or slurry	None	None
14X	RCSTS-03-INTEG02	Release of radioactive aerosols to the atmosphere from the SY valve pit due to fire or explosion of flammable gas.	Fire or explosion due to leakage of flammable gas due to pipe breach in slurry line caused by gas release from slurry	None	None

Table D-4. Defense In Depth Controls For Potential S3 and S2 Consequences. (23 sheets)

BIO Acc	ID	Hazardous Conditions	Cause	DID-Preventive	DID-Mitigative
14X	RCSTS-08-INTEG03	Release of radioactive slurry to soil surface from overflow of diversion box due to piping system leak.	Flammable gas explosion from release of trapped flammable gas within pipe combined with ignition source	None	None
14X	RCSTS-08-INTEG12	Release of radioactive aerosols to the atmosphere from the 6241-A diversion box due to fire or explosion of flammable gas.	Fire or explosion in the diversion box caused by buildup of flammable gas because of spill of supernate to diversion box sump	None	None
14X	RCSTS-09-INTEG05	Release of radioactive slurry to soil surface from overflow of vent station due to piping system leak.	Flammable gas explosion from release of trapped flammable gas within pipe combined with ignition source	None	None
14X	RCSTS-09-INTEG06	Release of radioactive aerosols to the atmosphere from the vent station due to fire or explosion of flammable gas.	Fire or explosion in the vent station caused by buildup of flammable gas because of spill of supernate or slurry to vent station	None	None
14X	RCSTS-09-INTEG14	Release of radioactive aerosols to the atmosphere caused by spray leak of slurry from vent station due to piping system leak.	Flammable gas explosion from release of trapped flammable gas within pipe combined with ignition source	None	None
14X	RCSTS-18/19-INTEG05	Release of radioactive slurry to the soil from the underground piping between the diversion box and the vent station due to piping system leak.	Failure of primary and encasement piping due to flammable gas explosion in primary piping	None	None
14X	RCSTS-24-INTEG03	Release of radioactive aerosols to the atmosphere from the lift station due to fire or explosion of flammable gas.	Fire or explosion in the lift station caused by buildup of flammable gas because of spill of supernate or slurry	None	None
14X	RCSTS-24-INTEG06	Release of radioactive aerosols to the atmosphere from the lift station due to fire or explosion of flammable gas.	Fire or explosion due to leakage of flammable gas due to pipe breach in slurry line caused by gas release from slurry	None	None
18X	RCSTS-01-FLOW03	Release of radioactive supernate to the soil surface from overflow of Tank 241-SY-102 due to mistransfer.	Mistransfer of material from east area via the supernate piping route.	None	None
18X	RCSTS-03-FLOW/INTEG01	Release of radioactive slurry to the soil surface from overflow in the SY-A or SY-B valve pit due to piping system leak (pool).	Failure of jumper due to misalignment (human error).	None	None

Table D-4. Defense In Depth Controls For Potential S3 and S2 Consequences. (23 sheets)

BIO Acc	ID	Hazardous Conditions	Cause	DID-Preventive	DID-Mitigative
18X	RCSTS-03-FLOW/INTEG02a	Release of radioactive supernate to the soil surface from overflow in the SY-A or SY-B valve pit due to piping system leak (pool).	Failure of jumper due to misalignment (human error)	None	None
18X	RCSTS-03-FLOW/INTEG02b	Release of radioactive supernate to the soil surface from overflow in the SY-A or SY-B valve pit due to piping system leak (pool).	Failure of jumper due to gasket failure	None	None
18X	RCSTS-03-FLOW/INTEG02c	Release of radioactive supernate to the soil surface from overflow in the SY-A or SY-B valve pit due to piping system leak (pool).	Failure of jumper due to corrosion	None	None
18X	RCSTS-03-FLOW02	Release of radioactive slurry to the soil surface from overflow in the SY-A or SY-B valve pit due to piping system leak (pool).	Computer failure or human error causing misrouting of material when flow path is not completely connected	None	None
18X	RCSTS-03-FLOW03	Release of radioactive slurry to the soil surface from overflow in the SY-A or SY-B valve pit due to piping system leak (pool).	External leak of valve or valves to the valve pit	None	None
18X	RCSTS-03-FLOW04	Release of radioactive supernate to the soil surface from overflow in the SY-A or SY-B valve pit due to piping system leak (pool).	Computer failure or human error causing misrouting of material when flow path is not completely connected	None	None
18X	RCSTS-03-FLOW05	Release of radioactive supernate to the soil surface from overflow in the SY-A or SY-B valve pit due to piping system leak (pool).	External leak of valve or valves to the valve pit	None	None
18X	RCSTS-03-INTEG05	Release of radioactive slurry to the soil surface from overflow in the SY-A or SY-B valve pit due to piping system leak.	External event (airplane crash, etc)	None	None
18X	RCSTS-03-INTEG07	Release of radioactive supernate to the soil surface from overflow in the SY-A or SY-B valve pit due to piping system leak.	External event (airplane crash, etc)	None	None

Table D-4. Defense In Depth Controls For Potential S3 and S2 Consequences. (23 sheets)

BIO Acc	ID	Hazardous Conditions	Cause	DID-Preventive	DID-Mitigative
18X	RCSTS-03-PRES02	Release of radioactive slurry to the soil surface from overflow in the SY-A or SY-B valve pit due to piping system leak (pool).	Water hammer	None	None
18X	RCSTS-03-PRES03	Release of radioactive supernate to the soil surface from overflow in the SY-A or SY-B valve pit due to piping system leak (pool).	Water hammer	None	None
18X	RCSTS-08-FLOW03	Release of radioactive supernate to soil surface from overflow of diversion box due to piping system leak.	External leak of valve or valves to the diversion box	None	None
18X	RCSTS-08-FLOW04	Release of radioactive slurry to soil surface from overflow of diversion box due to piping system leak.	External leak of valve or valves to the diversion box	None	None
18X	RCSTS-08-FLOW05	Release of radioactive supernate to soil surface from overflow of diversion box due to piping system leak.	Backflow of supernate to sump pump line, through sump pump and onto diversion box floor	None	None
18X	RCSTS-08-INTEG01	Release of radioactive slurry to soil surface from overflow of diversion box due to piping system leak.	Failure of piping due to corrosion	None	None
18X	RCSTS-08-INTEG02	Release of radioactive slurry to soil surface from overflow of diversion box due to piping system leak.	External event (airplane crash, etc)	None	None
18X	RCSTS-08-INTEG04	Release of radioactive slurry to soil surface from overflow of diversion box due to piping system leak.	Failure of piping due to material defect	None	None
18X	RCSTS-08-INTEG05	Release of radioactive slurry to soil surface from overflow of diversion box due to piping system leak.	Slurry pump overspeed causing catastrophic failure of pump with missiles damaging pipe	None	None
18X	RCSTS-08-INTEG17a	Release of radioactive supernate to the soil surface from overflow of diversion box due to piping system leak.	Failure of piping due to corrosion plus mitigative features failure	None	None
18X	RCSTS-08-INTEG17b	Release of radioactive supernate to the soil surface from overflow of diversion box due to piping system leak.	Failure of piping due to unrecognized material flaw	None	None

Table D-4. Defense In Depth Controls For Potential S3 and S2 Consequences. (23 sheets)

BIO Acc	ID	Hazardous Conditions	Cause	DID-Preventive	DID-Mitigative
18X	RCSTS-08-INTEG18	Release of radioactive supernate to the soil surface from overflow of diversion box due to piping system leak.	Failure of piping due to external event (airplane crash, volcanism, etc)	None	None
18X	RCSTS-08-PRES02	Release of radioactive slurry to soil surface from overflow of diversion box due to piping system leak.	Water hammer	None	None
18X	RCSTS-08-PRES03	Release of radioactive supernate to soil surface from overflow of diversion box due to piping system leak.	Water hammer	None	None
18X	RCSTS-08-TEMP01	Release of radioactive slurry to soil surface from overflow of diversion box due to piping system leak.	Freezing of piping within the diversion box due to cold temperatures caused by running the exhauster	None	None
18X	RCSTS-08-TEMP04	Release of radioactive supernate to the soil surface from overflow of diversion box due to piping system leak.	Failure of piping due to freezing	None	None
18X	RCSTS-09-FLOW01	Release of radioactive slurry to soil surface from overflow of vent station due to piping system leak.	Flow of slurry to vent station due to incomplete closing of vent valves after venting	None	None
18X	RCSTS-09-FLOW04	Release of radioactive slurry to soil surface from overflow of vent station due to piping system leak.	External leak of valve or valves to the vent station	None	None
18X	RCSTS-09-FLOW05	Release of radioactive supernate to soil surface from overflow of vent station due to piping system leak.	External leak of valve or valves to the vent station	None	None
18X	RCSTS-09-FLOW06	Release of radioactive supernate to soil surface from overflow of vent station due to piping system leak.	Flow of supernate to vent station due to incomplete closing of vent valves after venting	None	None
18X	RCSTS-09-FLOW07	Release of radioactive supernate to soil surface from overflow of vent station due to piping system leak.	Backflow of supernate to sump pump line, through sump pump and onto vent station floor	None	None
18X	RCSTS-09-FLOW11	Release of radioactive supernate to soil surface from overflow of vent station due to piping system leak.	Backflow of supernate to sump pump line, through sump pump and onto vent station floor	None	None
18X	RCSTS-09-INTEG01	Release of radioactive slurry to soil surface from overflow of vent station due to piping system leak.	Failure of piping due to corrosion	None	None

Table D-4. Defense In Depth Controls For Potential S3 and S2 Consequences. (23 sheets)

BIO Acc	ID	Hazardous Conditions	Cause	DID-Preventive	DID-Mitigative
18X	RCSTS-09-INTEG02	Release of radioactive supernate to soil surface from overflow of vent station due to piping system leak.	Failure of piping due to corrosion	None	None
18X	RCSTS-09-INTEG03	Release of radioactive slurry to soil surface from overflow of vent station due to piping system leak.	External event (airplane crash, etc)	None	None
18X	RCSTS-09-INTEG04	Release of radioactive supernate to soil surface from overflow of vent station due to piping system leak.	External event (airplane crash, etc)	None	None
18X	RCSTS-09-INTEG07	Release of radioactive slurry to soil surface from overflow of vent station due to piping system leak.	Failure of piping due to material defect	None	None
18X	RCSTS-09-INTEG08	Release of radioactive supernate to soil surface from overflow of vent station due to piping system leak.	Failure of piping due to material defect	None	None
18X	RCSTS-09-PRES01	Release of radioactive slurry to soil surface from overflow of vent station due to piping system leak.	Water hammer	None	None
18X	RCSTS-09-PRES02	Release of radioactive supernate to soil surface from overflow of vent station due to piping system leak.	Water hammer	None	None
18X	RCSTS-09-TEMP01	Release of radioactive slurry to soil surface from overflow of vent station due to piping system leak.	Freezing of piping within the vent station due to cold temperatures caused by running the exhauster	None	None
18X	RCSTS-09-TEMP02	Release of radioactive supernate to soil surface from overflow of vent station due to piping system leak.	Freezing of piping within the vent station due to cold temperatures caused by running the exhauster	None	None
18X	RCSTS-15/16-INTEG03b	Release of radioactive slurry to the soil surface from overflow of diversion box due to piping system leak.	Failure of piping due to external event (undermining from broken fluid transfer lines in vicinity)	None	None
18X	RCSTS-1FS-LEVEL03	Release of caustic solution and radionuclides to the sump pit from the water flush tank due to over filling of tank.	Overfilling of flush tank from flow of radioactive waste from transfer line. Block valves open, valve limit switch and pressure switch fail and administrative control of raw water block valves fail	None	None

Table D-4. Defense In Depth Controls For Potential S3 and S2 Consequences. (23 sheets)

BIO Acc	ID	Hazardous Conditions	Cause	DID-Preventive	DID-Mitigative
18X	RCSTS-22-PRESS03*	Release of radioactive supernate to soil surface from overflow of 244-A Lift Station due to piping break.	Dead heading of flow through the 244-A Lift Station with failure of PRV and subsequent downstream pipe failure	None	None
18X	RCSTS-22-PRESS04*	Release of radioactive slurry to soil surface from overflow of 244-A Lift Station due to piping break.	Dead heading of flow through the 244-A Lift Station with failure of PRV and subsequent downstream pipe failure	None	None
18X	RCSTS-24-FLOW/INTEG01	Release of radioactive slurry to soil surface from overflow of lift station due to piping system leak.	Failure of jumper due to corrosion	None	None
18X	RCSTS-24-FLOW/INTEG02	Release of radioactive supernate to soil surface from overflow of 244-A Lift Station due to piping system leak.	Failure of jumper due to corrosion	None	None
18X	RCSTS-24-FLOW/INTEG03	Release of radioactive slurry to soil surface from overflow of lift station due to piping system leak.	Failure of jumper due to gasket failure	None	None
18X	RCSTS-24-FLOW/INTEG04	Release of radioactive supernate to soil surface from overflow of 244-A Lift Station due to piping system leak.	Failure of jumper due to gasket failure	None	None
18X	RCSTS-24-FLOW/INTEG05	Release of radioactive slurry to soil surface from overflow of lift station due to piping system leak.	Failure of jumper due to misalignment	None	None
18X	RCSTS-24-FLOW/INTEG06	Release of radioactive supernate to soil surface from overflow of 244-A Lift Station due to piping system leak.	Failure of jumper due to misalignment	None	None
18X	RCSTS-24-FLOW01	Release of radioactive slurry to soil surface from overflow of lift station due to piping system leak.	Computer failure or human error causing misrouting of material when flow path is not completely connected	None	None
18X	RCSTS-24-FLOW02	Release of radioactive supernate to soil surface from overflow of 244-A Lift Station due to piping system leak.	Computer failure or human error causing misrouting of material when flow path is not completely connected	None	None
18X	RCSTS-24-FLOW03	Release of radioactive slurry to soil surface from overflow of lift station due to piping system leak.	External leak of valve or valves to the lift station	None	None

Table D-4. Defense In Depth Controls For Potential S3 and S2 Consequences. (23 sheets)

BIO Acc	ID	Hazardous Conditions	Cause	DID-Preventive	DID-Mitigative
18X	RCSTS-24-FLOW04	Release of radioactive supernate to soil surface from overflow of 244-A Lift Station due to piping system leak.	External leak of valve or valves to the lift station	None	None
18X	RCSTS-24-INTEG01	Release of radioactive slurry to soil surface from overflow of lift station due to piping system leak.	External event (airplane crash, etc)	None	None
18X	RCSTS-24-INTEG02	Release of radioactive supernate to soil surface from overflow of 244-A Lift Station due to piping system leak.	External event (airplane crash, etc)	None	None
18X	RCSTS-24-PRES01	Release of radioactive supernate to soil surface from overflow of 244-A Lift Station due to piping system leak.	Steam hammer or thermal stress caused by loss of flushwater flow to steam mixing chamber in east area	None	None
18X	RCSTS-24-PRES02	Release of radioactive slurry to soil surface from overflow of lift station due to piping system leak.	Water hammer	None	None
18X	RCSTS-24-PRES03	Release of radioactive supernate to soil surface from overflow of 244-A Lift Station due to piping system leak.	Water hammer	None	None
19X	RCSTS-04/05-INTEG01a	Release of radioactive supernate to the soil surface from the underground piping between the SY-A or SY-B valve pit and a diversion box due to piping system leak.	Failure of primary and encasement piping due to corrosion	None	None
19X	RCSTS-04/05-INTEG01b	Release of radioactive supernate to the soil surface from the underground piping between the SY-A or SY-B valve pit and a diversion box due to piping system leak.	Failure of primary and encasement piping due to unrecognized material flaw	None	None
19X	RCSTS-04/05-INTEG02	Release of radioactive supernate to the soil surface from the underground piping between the SY-A or SY-B valve pit and a diversion box due to piping system leak.	Failure of primary and encasement piping due to external event (airplane crash, volcanism, etc)	None	None

Table D-4. Defense In Depth Controls For Potential S3 and S2 Consequences. (23 sheets)

BIO Acc	ID	Hazardous Conditions	Cause	DID-Preventive	DID-Mitigative
19X	RCSTS-04/05-INTEG03	Release of radioactive supernate to the soil surface from the underground piping between the SY-A or SY-B valve pit and the diversion box due to piping system leak.	Failure of primary and encasement piping due to external event (excavation accident)	None	None
19X	RCSTS-04/05-INTEG04	Release of radioactive supernate to the soil surface from the underground piping between the SY-A or SY-B valve pit and a diversion box due to piping system leak.	Failure of primary and encasement piping due to external event (undermining from broken fluid transfer lines in vicinity)	None	None
19X	RCSTS-04/05-TEMP01	Release of radioactive supernate to the soil surface from the underground piping between the SY-A or SY-B valve pit and a diversion box due to piping system leak.	Failure of primary and encasement piping due to freezing	None	None
19X	RCSTS-10/11-INTEG01	Release of radioactive supernate to the soil from the underground piping between the diversion box and the vent station due to piping system leak.	Failure of primary and encasement piping due to external event (undermining from broken fluid transfer lines in vicinity)	None	None
19X	RCSTS-10/11-INTEG02a	Release of radioactive supernate to the soil from the underground piping between the diversion box and the vent station due to piping system leak.	Failure of primary and encasement piping due to corrosion	None	None
19X	RCSTS-10/11-INTEG03a	Release of radioactive supernate to the soil from the underground piping between the diversion box and the vent station due to piping system leak.	Failure of primary and encasement piping due to external event (excavation accident)	None	None
19X	RCSTS-10/11-INTEG04	Release of radioactive supernate to the soil from the underground piping between the diversion box and the vent station due to piping system leak.	Failure of primary and encasement piping due to external event (airplane crash, volcanism etc)	None	None
19X	RCSTS-10/11-INTEG05a	Release of radioactive supernate to the soil from the underground piping between the diversion box and the vent station due to piping system leak.	Failure of primary and encasement piping due to unrecognized material flaw	None	None

Table D-4. Defense In Depth Controls For Potential S3 and S2 Consequences. (23 sheets)

BIO Acc	ID	Hazardous Conditions	Cause	DID-Preventive	DID-Mitigative
19X	RCSTS-10/11-PRES01a	Release of radioactive supernate to the soil from the underground piping between the diversion box and the vent station due to piping system leak.	Failure of primary and encasement piping due to water hammer	None	None
19X	RCSTS-10/11-TEMP01	Release of radioactive supernate to the soil from the underground piping between the diversion box and the vent station due to piping system leak.	Failure of primary piping and encasement due to freezing	None	None
19X	RCSTS-10/11-TEMP02	Release of radioactive supernate to the soil from the underground piping between the diversion box and the vent station due to piping system leak.	Failure of primary and encasement piping due to thermal stress	None	None
19X	RCSTS-12/13-INTEG01	Release of radioactive supernate to the soil from the underground piping between the vent station and the 244-A Lift Station due to piping system leak.	Failure of primary and encasement piping due to external event (undermining from broken fluid transfer lines in vicinity)	None	None
19X	RCSTS-12/13-INTEG02a	Release of radioactive supernate to the soil from the underground piping between the vent station and the 244-A Lift Station due to piping system leak.	Failure of primary and encasement piping due to corrosion	None	None
19X	RCSTS-12/13-INTEG03a	Release of radioactive supernate to the soil from the underground piping between the vent station and the 244-A Lift Station due to piping system leak.	Failure of primary and encasement piping due to external event (excavation accident)	None	None
19X	RCSTS-12/13-INTEG04	Release of radioactive supernate to the soil from the underground piping between the vent station and the 244-A Lift Station due to piping system leak.	Failure of primary and encasement piping due to external event (airplane crash, volcanism etc)	None	None
19X	RCSTS-12/13-INTEG05a	Release of radioactive supernate to the soil from the underground piping between the vent station and the 244-A Lift Station due to piping system leak.	Failure of primary and encasement piping due to unrecognized material flaw	None	None
19X	RCSTS-12/13-PRES01a	Release of radioactive supernate to the soil from the underground piping between the vent station and the 244-A Lift Station due to piping system leak.	Failure of primary and encasement piping due to steam hammer caused by loss of flushwater flow to steam mixing chamber in east	None	None

Table D-4. Defense In Depth Controls For Potential S3 and S2 Consequences. (23 sheets)

BIO Acc	ID	Hazardous Conditions	Cause	DID-Preventive	DID-Mitigative
19X	RCSTS-12/13-PRES02	Release of radioactive supernate to the soil from the underground piping between the vent station and the 244-A Lift Station due to piping system leak.	Failure of primary and encasement piping due to water hammer	None	None
19X	RCSTS-12/13-TEMP01	Release of radioactive supernate to the soil from the underground piping between the vent station and the 244-A Lift Station due to piping system leak.	Failure of primary piping and encasement due to freezing	None	None
19X	RCSTS-12/13-TEMP02	Release of radioactive supernate to the soil from the underground piping between the vent station and the 244-A Lift Station due to piping system leak.	Failure of primary and encasement piping due to thermal stress	None	None
19X	RCSTS-15/16-INTEG01a	Release of radioactive slurry to the soil surface from the underground piping between the SY-A or SY-B valve pit and a diversion box due to piping system leak.	Failure of primary and encasement piping due to corrosion	None	None
19X	RCSTS-15/16-INTEG01b	Release of radioactive slurry to the soil surface from the underground piping between the SY-A or SY-B valve pit and a diversion box due to piping system leak.	Failure of primary and encasement piping due to unrecognized material flaw	None	None
19X	RCSTS-15/16-INTEG02	Release of radioactive slurry to the soil surface from the underground piping between the SY-A or SY-B valve pit and the diversion box due to piping system leak.	Failure of primary and encasement piping due to external event (excavation accident)	None	None
19X	RCSTS-15/16-INTEG03a	Release of radioactive slurry to the soil surface from the underground piping between the SY-A or SY-B valve pit and a diversion box due to piping system leak.	Failure of primary and encasement piping due to external event (undermining from broken fluid transfer lines in vicinity)	None	None
19X	RCSTS-15/16-INTEG05	Release of radioactive slurry to the soil surface from the underground piping between the SY-A or SY-B valve pit and a diversion box due to piping system leak.	Failure of primary and encasement piping due to external event (airplane crash, volcanism, etc)	None	None

Table D-4. Defense In Depth Controls For Potential S3 and S2 Consequences. (23 sheets)

BIO Acc	ID	Hazardous Conditions	Cause	DID-Preventive	DID-Mitigative
19X	RCSTS-15/16-TEMP01	Release of radioactive slurry to the soil surface from the underground piping between the SY-A or SY-B valve pit and a diversion box due to piping system leak.	Failure of primary and encasement piping due to freezing	None	None
19X	RCSTS-18/19-INTEG01	Release of radioactive slurry to the soil from the underground piping between the diversion box and the vent station due to piping system leak.	Failure of primary and encasement piping due to external event (undermining from broken fluid transfer lines in vicinity)	None	None
19X	RCSTS-18/19-INTEG02	Release of radioactive slurry to the soil from the underground piping between the diversion box and the vent station due to piping system leak.	Failure of primary and encasement piping due to corrosion	None	None
19X	RCSTS-18/19-INTEG03a	Release of radioactive slurry to the soil from the underground piping between the diversion box and the vent station due to piping system leak.	Failure of primary and encasement piping due to external event (excavation accident)	None	None
19X	RCSTS-18/19-INTEG04	Release of radioactive slurry to the soil from the underground piping between the diversion box and the vent station due to piping system leak.	Failure of primary and encasement piping due to external event (airplane crash, volcanism etc)	None	None
19X	RCSTS-18/19-INTEG06	Release of radioactive slurry to the soil from the underground piping between the diversion box and the vent station due to piping system leak.	Failure of primary and encasement piping due to unrecognized material flaw	None	None
19X	RCSTS-18/19-PRES01	Release of radioactive slurry to the soil from the underground piping between the diversion box and the vent station due to piping system leak.	Failure of primary and encasement piping due to water hammer	None	None
19X	RCSTS-18/19-TEMP01	Release of radioactive slurry to the soil from the underground piping between the diversion box and the vent station due to piping system leak.	Failure of primary piping and encasement due to freezing	None	None
19X	RCSTS-18/19-TEMP02	Release of radioactive slurry to the soil from the underground piping between the diversion box and the vent station due to piping system leak.	Failure of primary and encasement piping due to thermal stress	None	None

Table D-4. Defense In Depth Controls For Potential S3 and S2 Consequences. (23 sheets)

BIO Acc	ID	Hazardous Conditions	Cause	DID-Preventive	DID-Mitigative
20X	RCSTS-03-FLOW/INTEG03a	Release of radioactive slurry aerosols to the atmosphere caused by spray leak of slurry from the SY-A or SY-B valve pit due to piping system leak.	Failure of jumper due to misalignment (human error)	None	Trans Leak Detection Material Balance
20X	RCSTS-03-FLOW/INTEG03b	Release of radioactive slurry aerosols to the atmosphere caused by spray leak of slurry from the SY-A or SY-B valve pit due to piping system leak.	Failure of jumper due to gasket failure	None	Trans Leak Detection Material Balance
20X	RCSTS-03-FLOW/INTEG03c	Release of radioactive slurry aerosols to the atmosphere caused by spray leak of slurry from the SY-A or SY-B valve pit due to piping system leak.	Failure of jumper due to corrosion	None	Trans Leak Detection Material Balance
20X	RCSTS-03-FLOW/INTEG04a	Release of radioactive supernate aerosols to the atmosphere caused by spray leak of supernate from the SY-A or SY-B valve pit due to piping system leak.	Failure of jumper due to misalignment (human error)	None	Trans Leak Detection Material Balance
20X	RCSTS-03-FLOW/INTEG04b	Release of radioactive supernate aerosols to the atmosphere caused by spray leak of supernate from the SY-A or SY-B valve pit due to piping system leak.	Failure of jumper due to gasket failure	None	Trans Leak Detection Material Balance
20X	RCSTS-03-FLOW/INTEG04c	Release of radioactive supernate aerosols to the atmosphere caused by spray leak of supernate from the SY-A or SY-B valve pit due to piping system leak.	Failure of jumper due to corrosion	None	Trans Leak Detection Material Balance
20X	RCSTS-03-FLOW06	Release of radioactive slurry aerosols to the atmosphere caused by spray leak of slurry from the SY-A or SY-B valve pit due to piping system leak.	Computer failure or human error causing misrouting of material when flow path is not completely connected	None	Trans Leak Detection Material Balance
20X	RCSTS-03-FLOW07	Release of radioactive slurry aerosols to the atmosphere caused by spray leak of slurry from the SY-A or SY-B valve pit due to piping system leak.	External leak of valve or valves to the valve pit	None	Trans Leak Detection Material Balance
20X	RCSTS-03-FLOW08	Release of radioactive supernate aerosols to the atmosphere caused by spray leak of supernate from the SY-A or SY-B valve pit due to piping system leak.	Computer failure or human error causing misrouting of material when flow path is not completely connected	None	Trans Leak Detection Material Balance

Table D-4. Defense In Depth Controls For Potential S3 and S2 Consequences. (23 sheets)

BIO Acc	ID	Hazardous Conditions	Cause	DID-Preventive	DID-Mitigative
20X	RCSTS-03-INTEG03	Release of radioactive supernate aerosols to the atmosphere caused by spray leak of supernate from the SY-A or SY-B valve pit due to piping system leak.	External leak of valve or valves to the valve pit	None	Trans Leak Detection Material Balance
20X	RCSTS-03-INTEG09	Release of radioactive slurry aerosols to the atmosphere caused by spray leak of slurry from the SY-A or SY-B valve pit due to piping system leak.	External event (airplane crash, etc)	None	Material Balance
20X	RCSTS-03-INTEG11	Release of radioactive supernate aerosols to the atmosphere caused by spray leak of supernate from the SY-A or SY-B valve pit due to piping system leak.	External event (airplane crash, etc)	None	Material Balance
20X	RCSTS-08-FLOW08	Release of radioactive aerosols to the atmosphere caused by spray leak of slurry from diversion box due to piping system leak.	External leak of valve or valves to the diversion box	None	Trans Leak Detection Material Balance
20X	RCSTS-08-INTEG08	Release of radioactive aerosols to the atmosphere caused by spray leak of slurry from diversion box due to piping system leak.	Failure of piping due to corrosion	None	Trans Leak Detection Material Balance
20X	RCSTS-08-INTEG09	Release of radioactive aerosols to the atmosphere caused by spray leak of slurry from diversion box due to piping system leak.	External event (airplane crash, etc)	None	Material Balance
20X	RCSTS-08-INTEG10	Release of radioactive aerosols to the atmosphere caused by spray leak of supernate from diversion box due to piping system leak.	External event (airplane crash, etc)	None	Material Balance
20X	RCSTS-08-INTEG11	Release of radioactive aerosols to the atmosphere caused by spray leak of slurry from diversion box due to piping system leak.	Flammable gas explosion from release of trapped flammable gas within pipe combined with ignition source	None	Trans Leak Detection Material Balance
20X	RCSTS-08-INTEG13	Release of radioactive aerosols to the atmosphere caused by spray leak of slurry from diversion box due to piping system leak.	Failure of piping due to material defect	None	Trans Leak Detection Material Balance

Table D-4. Defense In Depth Controls For Potential S3 and S2 Consequences. (23 sheets)

BIO Acc	ID	Hazardous Conditions	Cause	DID-Preventive	DID-Mitigative
20X	RCSTS-08-INTEG14	Release of radioactive aerosols to the atmosphere caused by spray leak of slurry from diversion box due to piping system leak.	Slurry pump overspeed causing catastrophic failure of pump with missiles damaging pipe and challenging diversion box confinement	None	Trans Leak Detection Material Balance
20X	RCSTS-08-PRES04	Release of radioactive aerosols to the atmosphere caused by spray leak of slurry from diversion box due to piping system leak.	Water hammer	None	Trans Leak Detection Material Balance
20X	RCSTS-08-PRES05	Release of radioactive aerosols to the atmosphere caused by spray leak of supernate from diversion box due to piping system leak.	Water hammer	None	Trans Leak Detection Material Balance
20X	RCSTS-08-TEMP02	Release of radioactive aerosols to the atmosphere caused by spray leak of slurry from diversion box due to piping system leak.	Freezing of piping within the diversion box due to cold temperatures caused by running the exhauster	None	Trans Leak Detection Material Balance
20X	RCSTS-08-TEMP03	Release of radioactive aerosols to the atmosphere caused by spray leak of supernate from diversion box due to piping system leak.	Freezing of piping within the diversion box due to cold temperatures caused by running the exhauster	None	Trans Leak Detection Material Balance
20X	RCSTS-09-FLOW10	Release of radioactive aerosols to the atmosphere caused by spray leak of slurry from vent station due to piping system leak.	External leak of valve or valves to the vent station	None	Trans Leak Detection Material Balance
20X	RCSTS-09-INTEG11	Release of radioactive aerosols to the atmosphere caused by spray leak of slurry from vent station due to piping system leak.	Failure of piping due to corrosion	None	Trans Leak Detection Material Balance
20X	RCSTS-09-INTEG12	Release of radioactive aerosols to the atmosphere caused by spray leak of slurry from vent station due to piping system leak.	External event (airplane crash, etc)	None	Material Balance
20X	RCSTS-09-INTEG13	Release of radioactive aerosols to the atmosphere caused by spray leak of supernate from vent station due to piping system leak.	External event (airplane crash, etc)	None	Material Balance

Table D-4. Defense In Depth Controls For Potential S3 and S2 Consequences. (23 sheets)

BIO Acc	ID	Hazardous Conditions	Cause	DID-Preventive	DID-Mitigative
20X	RCSTS-09-INTEG15	Release of radioactive aerosols to the atmosphere caused by spray leak of slurry from vent station due to piping system leak.	Failure of piping due to material defect	None	Trans Leak Detection Material Balance
20X	RCSTS-09-PRES04	Release of radioactive aerosols to the atmosphere caused by spray leak of slurry from vent station due to piping system leak.	Water hammer	None	Trans Leak Detection Material Balance
20X	RCSTS-09-PRES05	Release of radioactive aerosols to the atmosphere caused by spray leak of supernate from vent station due to piping system leak.	Water hammer	None	Trans Leak Detection Material Balance
20X	RCSTS-09-TEMP03	Release of radioactive aerosols to the atmosphere caused by spray leak of slurry from vent station due to piping system leak.	Freezing of piping within the vent station due to cold temperatures caused by running the exhauster	None	Trans Leak Detection Material Balance
20X	RCSTS-09-TEMP04	Release of radioactive aerosols to the atmosphere caused by spray leak of supernate from vent station due to piping system leak.	Freezing of piping within the vent station due to cold temperatures caused by running the exhauster	None	Trans Leak Detection Material Balance
20X	RCSTS-22-PRESS01*	Release of radioactive aerosols to the atmosphere caused by spray leak of slurry from 244-A Lift Station due to piping system leak.	Dead heading of flow through the 244-A Lift Station with failure of PRV and development of crack in downstream piping	None	Trans Leak Detection Material Balance
20X	RCSTS-22-PRESS02*	Release of radioactive aerosols to the atmosphere caused by spray leak of supernate from 244-A Lift Station due to piping system leak.	Dead heading of flow through the 244-A Lift Station with failure of PRV and development of crack in downstream piping	None	Trans Leak Detection Material Balance
20X	RCSTS-24-FLOW/INTEG07	Release of radioactive aerosols to the atmosphere caused by spray leak of slurry from lift station due to piping system leak.	Failure of jumper due to corrosion	None	Trans Leak Detection Material Balance
20X	RCSTS-24-FLOW/INTEG08	Release of radioactive aerosols to the atmosphere caused by spray leak of supernate from lift station due to piping system leak.	Failure of jumper due to corrosion	None	Trans Leak Detection Material Balance

Table D-4. Defense In Depth Controls For Potential S3 and S2 Consequences. (23 sheets)

BIO Acc	ID	Hazardous Conditions	Cause	DID-Preventive	DID-Mitigative
20X	RCSTS-24-FLOW/INTEG09	Release of radioactive aerosols to the atmosphere caused by spray leak of slurry from lift station due to piping system leak.	Failure of jumper due to gasket failure	None	Trans Leak Detection Material Balance
20X	RCSTS-24-FLOW/INTEG10	Release of radioactive aerosols to the atmosphere caused by spray leak of supernate from lift station due to piping system leak.	Failure of jumper due to gasket failure	None	Trans Leak Detection Material Balance
20X	RCSTS-24-FLOW/INTEG11	Release of radioactive aerosols to the atmosphere caused by spray leak of slurry from lift station due to piping system leak.	Failure of jumper due to misalignment	None	Trans Leak Detection Material Balance
20X	RCSTS-24-FLOW/INTEG12	Release of radioactive aerosols to the atmosphere caused by spray leak of supernate from lift station due to piping system leak.	Failure of jumper due to misalignment	None	Trans Leak Detection Material Balance
20X	RCSTS-24-FLOW05	Release of radioactive aerosols to the atmosphere caused by spray leak of slurry from lift station due to piping system leak.	Computer failure or human error causing misrouting of material when flow path is not completely connected	None	Trans Leak Detection Material Balance
20X	RCSTS-24-FLOW06	Release of radioactive aerosols to the atmosphere caused by spray leak of supernate from lift station due to piping system leak.	Computer failure or human error causing misrouting of material when flow path is not completely connected	None	Trans Leak Detection Material Balance
20X	RCSTS-24-FLOW07	Release of radioactive aerosols to the atmosphere caused by spray leak of slurry from lift station due to piping system leak.	External leak of valve or valves to the lift station	None	Trans Leak Detection Material Balance
20X	RCSTS-24-FLOW08	Release of radioactive aerosols to the atmosphere caused by spray leak of supernate from lift station due to piping system leak.	External leak of valve or valves to the lift station	None	Trans Leak Detection Material Balance
20X	RCSTS-24-INTEG07	Release of radioactive aerosols to the atmosphere caused by spray leak of slurry from lift station due to piping system leak.	External event (airplane crash, etc)	None	Material Balance

Table D-4. Defense In Depth Controls For Potential S3 and S2 Consequences. (23 sheets)

BIO Acc	ID	Hazardous Conditions	Cause	DID-Preventive	DID-Mitigative
20X	RCSTS-24-INTEG08	Release of radioactive aerosols to the atmosphere caused by spray leak of supernate from lift station due to piping system leak.	External event (airplane crash, etc)	None	Material Balance
21X	RCSTS-10/11-INTEG03b*	Release of radioactive supernate to the atmosphere from the underground piping between the diversion box and the vent station due to excavation of piping system and subsequent leak.	Failure of primary and encasement piping due to external event (excavation accident)	None	Material Balance
21X	RCSTS-12/13-INTEG03b*	Release of radioactive supernate to the atmosphere from the underground piping between the vent station and the 244-A Lift Station due to excavation of piping system and subsequent leak.	Failure of primary and encasement piping due to external event (excavation accident)	None	Material Balance
21X	RCSTS-18/19-INTEG03b*	Release of radioactive slurry to the atmosphere from the underground piping between the diversion box and the vent station due to excavation of piping system and subsequent leak.	Failure of primary and encasement piping due to external event (excavation accident)	None	Material Balance
25X	RCSTS-03-INTEG04	Release of radioactive supernate aerosols to the atmosphere caused by spray leak of supernate from the SY-A or SY-B valve pit due to piping system leak.	Seismic event	None	None
25X	RCSTS-03-INTEG06	Release of radioactive slurry to the soil surface from overflow in the SY-A or SY-B valve pit due to piping system leak.	Seismic event	None	None
25X	RCSTS-03-INTEG08	Release of radioactive supernate to the soil surface from overflow in the SY-A or SY-B valve pit due to piping system leak (pool).	Seismic event	None	None
25X	RCSTS-03-INTEG10	Release of radioactive slurry aerosols to the atmosphere caused by spray leak of slurry from the SY-A or SY-B valve pit due to piping system leak.	Seismic event	None	None

Table D-4. Defense In Depth Controls For Potential S3 and S2 Consequences. (23 sheets)

BIO Acc	ID	Hazardous Conditions	Cause	DID-Preventive	DID-Mitigative
25X	RCSTS-04/05-INTEG05	Release of radioactive supernate to the soil surface from the underground piping between the SY-A or SY-B valve pit and a diversion box due to piping system leak.	Failure of primary and encasement piping due to seismic event	None	None
25X	RCSTS-08-INTEG06	Release of radioactive slurry to soil surface from overflow of diversion box due to piping system leak.	Seismic event	None	None
25X	RCSTS-08-INTEG07	Release of radioactive supernate to soil surface from overflow of diversion box due to piping system leak.	Seismic event	None	None
25X	RCSTS-08-INTEG15	Release of radioactive aerosols to the atmosphere caused by spray leak of slurry from diversion box due to piping system leak.	Seismic event	None	None
25X	RCSTS-08-INTEG16	Release of radioactive aerosols to the atmosphere caused by spray leak of supernate from diversion box due to piping system leak.	Seismic event	None	None
25X	RCSTS-09-INTEG09	Release of radioactive slurry to soil surface from overflow of vent station due to piping system leak.	Seismic event	None	None
25X	RCSTS-09-INTEG10	Release of radioactive supernate to soil surface from overflow of vent station due to piping system leak.	Seismic event	None	None
25X	RCSTS-09-INTEG16	Release of radioactive aerosols to the atmosphere caused by spray leak of slurry from vent station due to piping system leak.	Seismic event	None	None
25X	RCSTS-09-INTEG17	Release of radioactive aerosols to the atmosphere caused by spray leak of supernate from vent station due to piping system leak.	Seismic event	None	None
25X	RCSTS-10/11-INTEG06	Release of radioactive supernate to the soil from the underground piping between the diversion box and the vent station due to piping system leak.	Failure of primary and encasement piping due to seismic event	None	None

Table D-4. Defense In Depth Controls For Potential S3 and S2 Consequences. (23 sheets)

BIO Acc	ID	Hazardous Conditions	Cause	DID-Preventive	DID-Mitigative
25X	RCSTS-12/13-INTEG06	Release of radioactive supernate to the soil from the underground piping between the vent station and the 244-A Lift Station due to piping system leak.	Failure of primary and encasement piping due to seismic event	None	None
25X	RCSTS-15/16-INTEG04	Release of radioactive slurry to the soil surface from the underground piping between the SY-A or SY-B valve pit and the diversion box due to piping system leak.	Failure of primary and encasement piping due to seismic event	None	None
25X	RCSTS-18/19-INTEG07	Release of radioactive slurry to the soil from the underground piping between the diversion box and the vent station due to piping system leak.	Failure of primary and encasement piping due to seismic event	None	None
25X	RCSTS-24-INTEG04	Release of radioactive slurry to soil surface from overflow of lift station due to piping system leak.	Seismic event	None	None
25X	RCSTS-24-INTEG05	Release of radioactive supernate to soil surface from overflow of 244-A Lift Station due to piping system leak.	Seismic event	None	None
25X	RCSTS-24-INTEG09	Release of radioactive aerosols to the atmosphere caused by spray leak of slurry from lift station due to piping system leak.	Seismic event	None	None
25X	RCSTS-24-INTEG10	Release of radioactive aerosols to the atmosphere caused by spray leak of supernate from lift station due to piping system leak.	Seismic event	None	None

This page intentionally left blank.

Table D-5. Defense In Depth For Potential S1 Consequences With F3 Frequency. (2 sheets)

ID	Hazardous Conditions	Cause	DID-Preventive	DID-Mitigative
RCSTS-01-FLOW01	Release of radioactive slurry or supernate to the soil surface from overflow of the 244-S catch station due to reverse flow.	Reverse flow to 244-S catch station caused by improper valve lineup.	None	None
RCSTS-03-FLOW01	Release of radioactive slurry or supernate to the SY flush pit from transfer line due to backflow.	Reverse flow to flush pit caused by improper valving sequence	None	None
RCSTS-03-PRES01	Release of radioactive material to atmosphere from SY valve pit due to over-pressurization event in Tank 241-SY-102.	Pressure event in Tank 241-SY-102 with loss of valve pit seal loop water	None	None
RCSTS-08-AIR01	Release of radioactive vapors to the diversion box atmosphere from accumulated waste in diversion box due to pipe encasement draining.	Draining of the encasement	None	None
RCSTS-08-AIR02	Exposure to chemical vapors and liquids in diversion box due to the spill or leak of chemicals in confined space.	Chemicals brought in for decontamination and maintenance	None	None
RCSTS-08-AIR03	Release of radioactive vapors to the diversion box atmosphere due to waste being present in box.	Leak of waste solution	None	None
RCSTS-08-AIR04	Release of chemical waste into diversion box from leak of waste solution resulting in worker exposure.	Leak of waste solution	None	None
RCSTS-08-OCC01	Worker injury due to welding gas bottle becoming a missile in diversion box.	Damage from welding gas bottle during maintenance activity in diversion box	None	None
RCSTS-08-OCC02	Worker discomfort from cold temperatures in diversion box.	Running an exhauster during cold weather	None	None
RCSTS-08-RAD01	Release of radioactive material to the diversion box from transfer piping due to encasement draining.	Draining of the encasement	None	None
RCSTS-08-RAD03	High radiation dose to worker from the diversion box due to the presence of residual radioactive contamination.	Holdup of radionuclides due to trapped radioactive material in pumps or pipes	Diversion Box Design Features	Diversion Box Design Features ALARA Program
RCSTS-09-AIR02	Release of radioactive vapors to the vent station atmosphere due to waste being present in station.	Leak of waste solution	None	None
RCSTS-09-AIR03	Exposure to chemical vapors and liquids in vent station due to the spill or leak of chemicals.	Chemicals brought in for decontamination and maintenance	None	None
RCSTS-09-AIR04	Release of chemical waste into diversion box from leak of waste solution resulting in worker exposure.	Leak of waste solution	None	None

Table D-5. Defense In Depth For Potential S1 Consequences With F3 Frequency. (2 sheets)

ID	Hazardous Conditions	Cause	DID-Preventive	DID-Mitigative
RCSTS-09-OCC01	Worker injury due to welding gas bottle becoming a missile in vent station.	Damage from welding gas bottle during maintenance activity in vent station	None	None
RCSTS-09-OCC02	Worker discomfort from cold temperatures in vent station.	Running an exhauster during cold weather	None	None
RCSTS-09-RAD03	High radiation dose to worker from the vent station due to the presence of residual radioactive contamination.	Holdup of radionuclides due to trapped radioactive material in pipes	None	None
RCSTS-1FS-LEVEL01	Release of caustic solution to the sump pit from the water flush tank due to over filling of tank.	Operator error - overfill of caustic material	Water Flush System Design	Flush Tank Sump
RCSTS-1FS-LEVEL02	Release of caustic solution and radionuclides to the sump pit from the water flush tank due to over filling of tank.	Flush tank receives radioactive waste from transfer line during drainback process. Jumper block valves and raw water block valves opened during the drain back of waste from vent station of the cross site transfer line.	None	None
RCSTS-1FS-LEVEL04	Release of caustic solution to the sump pit from the water flush tank due to human error.	Human error - drain valve left open	None	None
RCSTS-4FS-FLOW 02	Release of caustic material to caustic storage area from caustic drum due to handling error.	Materials handling accident	None	None
RCSTS-5FS-FLOW 03	Release of radioactive material into water flush tank due to loss of flush system pump operation.	Loss of pump pressure during flush operation causing back flow of waste	None	None
RCSTS-GENERAL-PRES	Release of radioactive material to the soil surface from supernate or slurry piping due to encasement breach (pipe is considered empty except for residual contamination).	Pneumatic leak testing	None	None

Table D-6. Defense In Depth Controls For Potentially Severe (E3 and E2) Environmental Consequences. (22 sheets)

ID	Hazardous Conditions	Cause	DID-Preventive	DID-Mitigative
RCSTS-01-FLOW02	Release of radioactive aerosols and entrained solids to the atmosphere from Tank 241-SY-102 due to criticality.	Mistransfer of material containing organic extractant from east area via the supernate piping route	None	None
RCSTS-01-FLOW03	Release of radioactive supernate to the soil surface from overflow of Tank 241-SY-102 due to mistransfer.	Mistransfer of material from east area via the supernate piping route.	None	None
RCSTS-01-FLOW04	Release of radioactive aerosols/entrained solids and/or toxic gases to the atmosphere from Tank 241-SY-102 due to chemical reaction.	Mistransfer of incompatible material from east area via the supernate piping route.	Tank Farm Waste Compat Prog Waste Trans Proc Cntrls	None
RCSTS-01-FLOW05	Release of ammonia to atmosphere from a fire or a gas release resulting in an explosion due to addition of inadequately diluted caustic.	Human error	Industrial Hygiene Program	None
RCSTS-03-FLOW/INTEG01	Release of radioactive slurry to the soil surface from overflow in the SY-A or SY-B valve pit due to piping system leak (pool).	Failure of jumper due to misalignment (human error).	None	None
RCSTS-03-FLOW/INTEG02a	Release of radioactive supernate to the soil surface from overflow in the SY-A or SY-B valve pit due to piping system leak (pool).	Failure of jumper due to misalignment (human error)	None	None
RCSTS-03-FLOW/INTEG02b	Release of radioactive supernate to the soil surface from overflow in the SY-A or SY-B valve pit due to piping system leak (pool).	Failure of jumper due to gasket failure	None	None
RCSTS-03-FLOW/INTEG02c	Release of radioactive supernate to the soil surface from overflow in the SY-A or SY-B valve pit due to piping system leak (pool).	Failure of jumper due to corrosion	None	None
RCSTS-03-FLOW/INTEG03a	Release of radioactive slurry aerosols to the atmosphere caused by spray leak of slurry from the SY-A or SY-B valve pit due to piping system leak.	Failure of jumper due to misalignment (human error)	None	Trans Leak Detection: Material Balance
RCSTS-03-FLOW/INTEG03b	Release of radioactive slurry aerosols to the atmosphere caused by spray leak of slurry from the SY-A or SY-B valve pit due to piping system leak.	Failure of jumper due to gasket failure	None	Trans Leak Detection: Material Balance

Table D-6. Defense In Depth Controls For Potentially Severe (E3 and E2) Environmental Consequences. (22 sheets)

ID	Hazardous Conditions	Cause	DID-Preventive	DID-Mitigative
RCSTS-03-FLOW/INTEG03c	Release of radioactive slurry aerosols to the atmosphere caused by spray leak of slurry from the SY-A or SY-B valve pit due to piping system leak.	Failure of jumper due to corrosion	None	Trans Leak Detection: Material Balance
RCSTS-03-FLOW/INTEG04a	Release of radioactive supernate aerosols to the atmosphere caused by spray leak of supernate from the SY-A or SY-B valve pit due to piping system leak.	Failure of jumper due to misalignment (human error)	None	Trans Leak Detection: Material Balance
RCSTS-03-FLOW/INTEG04b	Release of radioactive supernate aerosols to the atmosphere caused by spray leak of supernate from the SY-A or SY-B valve pit due to piping system leak.	Failure of jumper due to gasket failure	None	Trans Leak Detection: Material Balance
RCSTS-03-FLOW/INTEG04c	Release of radioactive supernate aerosols to the atmosphere caused by spray leak of supernate from the SY-A or SY-B valve pit due to piping system leak.	Failure of jumper due to corrosion	None	Trans Leak Detection: Material Balance
RCSTS-03-FLOW02	Release of radioactive slurry to the soil surface from overflow in the SY-A or SY-B valve pit due to piping system leak (pool).	Computer failure or human error causing misrouting of material when flow path is not completely connected	None	None
RCSTS-03-FLOW03	Release of radioactive slurry to the soil surface from overflow in the SY-A or SY-B valve pit due to piping system leak (pool).	External leak of valve or valves to the valve pit	None	None
RCSTS-03-FLOW04	Release of radioactive supernate to the soil surface from overflow in the SY-A or SY-B valve pit due to piping system leak (pool).	Computer failure or human error causing misrouting of material when flow path is not completely connected	None	None
RCSTS-03-FLOW05	Release of radioactive supernate to the soil surface from overflow in the SY-A or SY-B valve pit due to piping system leak (pool).	External leak of valve or valves to the valve pit	None	None
RCSTS-03-FLOW06	Release of radioactive slurry aerosols to the atmosphere caused by spray leak of slurry from the SY-A or SY-B valve pit due to piping system leak.	Computer failure or human error causing misrouting of material when flow path is not completely connected	None	Trans Leak Detection: Material Balance

Table D-6. Defense In Depth Controls For Potentially Severe (E3 and E2) Environmental Consequences. (22 sheets)

ID	Hazardous Conditions	Cause	DID-Preventive	DID-Mitigative
RCSTS-03-FLOW07	Release of radioactive slurry aerosols to the atmosphere caused by spray leak of slurry from the SY-A or SY-B valve pit due to piping system leak.	External leak of valve or valves to the valve pit	None	Trans Leak Detection: Material Balance
RCSTS-03-FLOW08	Release of radioactive supernate aerosols to the atmosphere caused by spray leak of supernate from the SY-A or SY-B valve pit due to piping system leak.	Computer failure or human error causing misrouting of material when flow path is not completely connected	None	Trans Leak Detection: Material Balance
RCSTS-03-INTEG01	Release of radioactive aerosols to the atmosphere from the SY valve pit due to fire or explosion of flammable gas.	Fire or explosion in the valve pit caused by buildup of flammable gas because of spill of supernate or slurry	None	None
RCSTS-03-INTEG02	Release of radioactive aerosols to the atmosphere from the SY valve pit due to fire or explosion of flammable gas.	Fire or explosion due to leakage of flammable gas due to pipe breach in slurry line caused by gas release from slurry	None	None
RCSTS-03-INTEG03	Release of radioactive supernate aerosols to the atmosphere caused by spray leak of supernate from the SY-A or SY-B valve pit due to piping system leak.	External leak of valve or valves to the valve pit	None	Trans Leak Detection: Material Balance
RCSTS-03-INTEG04	Release of radioactive supernate aerosols to the atmosphere caused by spray leak of supernate from the SY-A or SY-B valve pit due to piping system leak.	Seismic event	None	None
RCSTS-03-INTEG05	Release of radioactive slurry to the soil surface from overflow in the SY-A or SY-B valve pit due to piping system leak.	External event (airplane crash, etc)	None	None
RCSTS-03-INTEG06	Release of radioactive slurry to the soil surface from overflow in the SY-A or SY-B valve pit due to piping system leak.	Seismic event	None	None
RCSTS-03-INTEG07	Release of radioactive supernate to the soil surface from overflow in the SY-A or SY-B valve pit due to piping system leak.	External event (airplane crash, etc)	None	None
RCSTS-03-INTEG08	Release of radioactive supernate to the soil surface from overflow in the SY-A or SY-B valve pit due to piping system leak (pool).	Seismic event	None	None

Table D-6. Defense In Depth Controls For Potentially Severe (E3 and E2) Environmental Consequences. (22 sheets)

ID	Hazardous Conditions	Cause	DID-Preventive	DID-Mitigative
RCSTS-03-INTEG09	Release of radioactive slurry aerosols to the atmosphere caused by spray leak of slurry from the SY-A or SY-B valve pit due to piping system leak.	External event (airplane crash, etc)	None	Material Balance
RCSTS-03-INTEG10	Release of radioactive slurry aerosols to the atmosphere caused by spray leak of slurry from the SY-A or SY-B valve pit due to piping system leak.	Seismic event	None	None
RCSTS-03-INTEG11	Release of radioactive supernate aerosols to the atmosphere caused by spray leak of supernate from the SY-A or SY-B valve pit due to piping system leak.	External event (airplane crash, etc)	None	Mass Balance
RCSTS-03-PRES02	Release of radioactive slurry to the soil surface from overflow in the SY-A or SY-B valve pit due to piping system leak (pool).	Water hammer	None	None
RCSTS-03-PRES03	Release of radioactive supernate to the soil surface from overflow in the SY-A or SY-B valve pit due to piping system leak (pool).	Water hammer	None	None
RCSTS-04/05-INTEG01a	Release of radioactive supernate to the soil surface from the underground piping between the SY-A or SY-B valve pit and a diversion box due to piping system leak.	Failure of primary and encasement piping due to corrosion	None	None
RCSTS-04/05-INTEG01b	Release of radioactive supernate to the soil surface from the underground piping between the SY-A or SY-B valve pit and a diversion box due to piping system leak.	Failure of primary and encasement piping due to unrecognized material flaw	None	None
RCSTS-04/05-INTEG02	Release of radioactive supernate to the soil surface from the underground piping between the SY-A or SY-B valve pit and a diversion box due to piping system leak.	Failure of primary and encasement piping due to external event (airplane crash, volcanism, etc)	None	None
RCSTS-04/05-INTEG03	Release of radioactive supernate to the soil surface from the underground piping between the SY-A or SY-B valve pit and the diversion box due to piping system leak.	Failure of primary and encasement piping due to external event (excavation accident)	None	None

Table D-6. Defense In Depth Controls For Potentially Severe (E3 and E2) Environmental Consequences. (22 sheets)

ID	Hazardous Conditions	Cause	DID-Preventive	DID-Mitigative
RCSTS-04/05-INTEG04	Release of radioactive supernate to the soil surface from the underground piping between the SY-A or SY-B valve pit and a diversion box due to piping system leak.	Failure of primary and encasement piping due to external event (undermining from broken fluid transfer lines in vicinity)	None	None
RCSTS-04/05-INTEG05	Release of radioactive supernate to the soil surface from the underground piping between the SY-A or SY-B valve pit and a diversion box due to piping system leak.	Failure of primary and encasement piping due to seismic event	None	None
RCSTS-04/05-TEMP01	Release of radioactive supernate to the soil surface from the underground piping between the SY-A or SY-B valve pit and a diversion box due to piping system leak.	Failure of primary and encasement piping due to freezing	None	None
RCSTS-08-FLOW03	Release of radioactive supernate to soil surface from overflow of diversion box due to piping system leak.	External leak of valve or valves to the diversion box	None	None
RCSTS-08-FLOW04	Release of radioactive slurry to soil surface from overflow of diversion box due to piping system leak.	External leak of valve or valves to the diversion box	None	None
RCSTS-08-FLOW05	Release of radioactive supernate to soil surface from overflow of diversion box due to piping system leak.	Backflow of supernate to sump pump line, through sump pump and onto diversion box floor	None	None
RCSTS-08-FLOW08	Release of radioactive aerosols to the atmosphere caused by spray leak of slurry from diversion box due to piping system leak.	External leak of valve or valves to the diversion box	None	Trans Leak Detection: Material Balance
RCSTS-08-INTEG01	Release of radioactive slurry to soil surface from overflow of diversion box due to piping system leak.	Failure of piping due to corrosion	None	None
RCSTS-08-INTEG02	Release of radioactive slurry to soil surface from overflow of diversion box due to piping system leak.	External event (airplane crash, etc)	None	None
RCSTS-08-INTEG03	Release of radioactive slurry to soil surface from overflow of diversion box due to piping system leak.	Flammable gas explosion from release of trapped flammable gas within pipe combined with ignition source	None	None
RCSTS-08-INTEG04	Release of radioactive slurry to soil surface from overflow of diversion box due to piping system leak.	Failure of piping due to material defect	None	None

Table D-6. Defense In Depth Controls For Potentially Severe (E3 and E2) Environmental Consequences. (22 sheets)

ID	Hazardous Conditions	Cause	DID-Preventive	DID-Mitigative
RCSTS-08-INTEG05	Release of radioactive slurry to soil surface from overflow of diversion box due to piping system leak.	Slurry pump overspeed causing catastrophic failure of pump with missiles damaging pipe	None	None
RCSTS-08-INTEG06	Release of radioactive slurry to soil surface from overflow of diversion box due to piping system leak.	Seismic event	None	None
RCSTS-08-INTEG07	Release of radioactive supernate to soil surface from overflow of diversion box due to piping system leak.	Seismic event	None	None
RCSTS-08-INTEG08	Release of radioactive aerosols to the atmosphere caused by spray leak of slurry from diversion box due to piping system leak.	Failure of piping due to corrosion	None	Trans Leak Detection: Material Balance
RCSTS-08-INTEG09	Release of radioactive aerosols to the atmosphere caused by spray leak of slurry from diversion box due to piping system leak.	External event (airplane crash, etc)	None	Material Balance
RCSTS-08-INTEG10	Release of radioactive aerosols to the atmosphere caused by spray leak of supernate from diversion box due to piping system leak.	External event (airplane crash, etc)	None	Material Balance
RCSTS-08-INTEG11	Release of radioactive aerosols to the atmosphere caused by spray leak of slurry from diversion box due to piping system leak.	Flammable gas explosion from release of trapped flammable gas within pipe combined with ignition source	None	Trans Leak Detection: Material Balance
RCSTS-08-INTEG12	Release of radioactive aerosols to the atmosphere from the 6241-A diversion box due to fire or explosion of flammable gas.	Fire or explosion in the diversion box caused by buildup of flammable gas because of spill of supernate to diversion box sump	None	None
RCSTS-08-INTEG13	Release of radioactive aerosols to the atmosphere caused by spray leak of slurry from diversion box due to piping system leak.	Failure of piping due to material defect	None	Trans Leak Detection: Material Balance
RCSTS-08-INTEG14	Release of radioactive aerosols to the atmosphere caused by spray leak of slurry from diversion box due to piping system leak.	Slurry pump overspeed causing catastrophic failure of pump with missiles damaging pipe and challenging diversion box confinement	None	Trans Leak Detection: Material Balance

Table D-6. Defense In Depth Controls For Potentially Severe (E3 and E2) Environmental Consequences. (22 sheets)

ID	Hazardous Conditions	Cause	DID-Preventive	DID-Mitigative
RCSTS-08-INTEG15	Release of radioactive aerosols to the atmosphere caused by spray leak of slurry from diversion box due to piping system leak.	Seismic event	None	None
RCSTS-08-INTEG16	Release of radioactive aerosols to the atmosphere caused by spray leak of supernate from diversion box due to piping system leak.	Seismic event	None	None
RCSTS-08-INTEG17a	Release of radioactive supernate to the soil surface from overflow of diversion box due to piping system leak.	Failure of piping due to corrosion plus mitigative features failure	None	None
RCSTS-08-INTEG17b	Release of radioactive supernate to the soil surface from overflow of diversion box due to piping system leak.	Failure of piping due to unrecognized material flaw	None	None
RCSTS-08-INTEG18	Release of radioactive supernate to the soil surface from overflow of diversion box due to piping system leak.	Failure of piping due to external event (airplane crash, volcanism, etc)	None	None
RCSTS-08-PRES02	Release of radioactive slurry to soil surface from overflow of diversion box due to piping system leak.	Water hammer	None	None
RCSTS-08-PRES03	Release of radioactive supernate to soil surface from overflow of diversion box due to piping system leak.	Water hammer	None	None
RCSTS-08-PRES04	Release of radioactive aerosols to the atmosphere caused by spray leak of slurry from diversion box due to piping system leak.	Water hammer	None	Trans Leak Detection: Material Balance
RCSTS-08-PRES05	Release of radioactive aerosols to the atmosphere caused by spray leak of supernate from diversion box due to piping system leak.	Water hammer	None	Trans Leak Detection: Material Balance
RCSTS-08-TEMP01	Release of radioactive slurry to soil surface from overflow of diversion box due to piping system leak.	Freezing of piping within the diversion box due to cold temperatures caused by running the exhauster	None	None
RCSTS-08-TEMP02	Release of radioactive aerosols to the atmosphere caused by spray leak of slurry from diversion box due to piping system leak.	Freezing of piping within the diversion box due to cold temperatures caused by running the exhauster	None	Trans Leak Detection: Material Balance

Table D-6. Defense In Depth Controls For Potentially Severe (E3 and E2) Environmental Consequences. (22 sheets)

ID	Hazardous Conditions	Cause	DID-Preventive	DID-Mitigative
RCSTS-08-TEMP03	Release of radioactive aerosols to the atmosphere caused by spray leak of supernate from diversion box due to piping system leak.	Freezing of piping within the diversion box due to cold temperatures caused by running the exhauster	None	Trans Leak Detection: Material Balance
RCSTS-08-TEMP04	Release of radioactive supernate to the soil surface from overflow of diversion box due to piping system leak.	Failure of piping due to freezing	None	None
RCSTS-09-FLOW01	Release of radioactive slurry to soil surface from overflow of vent station due to piping system leak.	Flow of slurry to vent station due to incomplete closing of vent valves after venting	None	None
RCSTS-09-FLOW04	Release of radioactive slurry to soil surface from overflow of vent station due to piping system leak.	External leak of valve or valves to the vent station	None	None
RCSTS-09-FLOW05	Release of radioactive supernate to soil surface from overflow of vent station due to piping system leak.	External leak of valve or valves to the vent station	None	None
RCSTS-09-FLOW06	Release of radioactive supernate to soil surface from overflow of vent station due to piping system leak.	Flow of supernate to vent station due to incomplete closing of vent valves after venting	None	None
RCSTS-09-FLOW07	Release of radioactive supernate to soil surface from overflow of vent station due to piping system leak.	Backflow of supernate to sump pump line, through sump pump and onto vent station floor	None	None
RCSTS-09-FLOW10	Release of radioactive aerosols to the atmosphere caused by spray leak of slurry from vent station due to piping system leak.	External leak of valve or valves to the vent station	None	Trans Leak Detection: Material Balance
RCSTS-09-FLOW11	Release of radioactive supernate to soil surface from overflow of vent station due to piping system leak.	Backflow of supernate to sump pump line, through sump pump and onto vent station floor	None	None
RCSTS-09-INTEG01	Release of radioactive slurry to soil surface from overflow of vent station due to piping system leak.	Failure of piping due to corrosion	None	None
RCSTS-09-INTEG02	Release of radioactive supernate to soil surface from overflow of vent station due to piping system leak.	Failure of piping due to corrosion	None	None

Table D-6. Defense In Depth Controls For Potentially Severe (E3 and E2) Environmental Consequences. (22 sheets)

ID	Hazardous Conditions	Cause	DID-Preventive	DID-Mitigative
RCSTS-09-INTEG03	Release of radioactive slurry to soil surface from overflow of vent station due to piping system leak.	External event (airplane crash, etc)	None	None
RCSTS-09-INTEG04	Release of radioactive supernate to soil surface from overflow of vent station due to piping system leak.	External event (airplane crash, etc)	None	None
RCSTS-09-INTEG05	Release of radioactive slurry to soil surface from overflow of vent station due to piping system leak.	Flammable gas explosion from release of trapped flammable gas within pipe combined with ignition source	None	None
RCSTS-09-INTEG06	Release of radioactive aerosols to the atmosphere from the vent station due to fire or explosion of flammable gas.	Fire or explosion in the vent station caused by buildup of flammable gas because of spill of supernate or slurry to vent station	None	None
RCSTS-09-INTEG07	Release of radioactive slurry to soil surface from overflow of vent station due to piping system leak.	Failure of piping due to material defect	None	None
RCSTS-09-INTEG08	Release of radioactive supernate to soil surface from overflow of vent station due to piping system leak.	Failure of piping due to material defect	None	None
RCSTS-09-INTEG09	Release of radioactive slurry to soil surface from overflow of vent station due to piping system leak.	Seismic event	None	None
RCSTS-09-INTEG10	Release of radioactive supernate to soil surface from overflow of vent station due to piping system leak.	Seismic event	None	None
RCSTS-09-INTEG11	Release of radioactive aerosols to the atmosphere caused by spray leak of slurry from vent station due to piping system leak.	Failure of piping due to corrosion	None	Trans Leak Detection: Material Balance
RCSTS-09-INTEG12	Release of radioactive aerosols to the atmosphere caused by spray leak of slurry from vent station due to piping system leak.	External event (airplane crash, etc)	None	Material Balance
RCSTS-09-INTEG13	Release of radioactive aerosols to the atmosphere caused by spray leak of supernate from vent station due to piping system leak.	External event (airplane crash, etc)	None	Material Balance

Table D-6. Defense In Depth Controls For Potentially Severe (E3 and E2) Environmental Consequences. (22 sheets)

ID	Hazardous Conditions	Cause	DID-Preventive	DID-Mitigative
RCSTS-09-INTEG14	Release of radioactive aerosols to the atmosphere caused by spray leak of slurry from vent station due to piping system leak.	Flammable gas explosion from release of trapped flammable gas within pipe combined with ignition source	None	None
RCSTS-09-INTEG15	Release of radioactive aerosols to the atmosphere caused by spray leak of slurry from vent station due to piping system leak.	Failure of piping due to material defect	None	Trans Leak Detection: Material Balance
RCSTS-09-INTEG16	Release of radioactive aerosols to the atmosphere caused by spray leak of slurry from vent station due to piping system leak.	Seismic event	None	None
RCSTS-09-INTEG17	Release of radioactive aerosols to the atmosphere caused by spray leak of supernate from vent station due to piping system leak.	Seismic event	None	None
RCSTS-09-PRES01	Release of radioactive slurry to soil surface from overflow of vent station due to piping system leak.	Water hammer	None	None
RCSTS-09-PRES02	Release of radioactive supernate to soil surface from overflow of vent station due to piping system leak.	Water hammer	None	None
RCSTS-09-PRES04	Release of radioactive aerosols to the atmosphere caused by spray leak of slurry from vent station due to piping system leak.	Water hammer	None	Trans Leak Detection: Material Balance
RCSTS-09-PRES05	Release of radioactive aerosols to the atmosphere caused by spray leak of supernate from vent station due to piping system leak.	Water hammer	None	Trans Leak Detection: Material Balance
RCSTS-09-TEMP01	Release of radioactive slurry to soil surface from overflow of vent station due to piping system leak.	Freezing of piping within the vent station due to cold temperatures caused by running the exhauster	None	None
RCSTS-09-TEMP02	Release of radioactive supernate to soil surface from overflow of vent station due to piping system leak.	Freezing of piping within the vent station due to cold temperatures caused by running the exhauster	None	None
RCSTS-09-TEMP03	Release of radioactive aerosols to the atmosphere caused by spray leak of slurry from vent station due to piping system leak.	Freezing of piping within the vent station due to cold temperatures caused by running the exhauster	None	Trans Leak Detection: Material Balance

Table D-6. Defense In Depth Controls For Potentially Severe (E3 and E2) Environmental Consequences. (22 sheets)

ID	Hazardous Conditions	Cause	DID-Preventive	DID-Mitigative
RCSTS-09-TEMP04	Release of radioactive aerosols to the atmosphere caused by spray leak of supernate from vent station due to piping system leak.	Freezing of piping within the vent station due to cold temperatures caused by running the exhauster	None	Trans Leak Detection: Material Balance
RCSTS-10/11-INTEG01	Release of radioactive supernate to the soil from the underground piping between the diversion box and the vent station due to piping system leak.	Failure of primary and encasement piping due to external event (undermining from broken fluid transfer lines in vicinity)	None	None
RCSTS-10/11-INTEG02a	Release of radioactive supernate to the soil from the underground piping between the diversion box and the vent station due to piping system leak.	Failure of primary and encasement piping due to corrosion	None	None
RCSTS-10/11-INTEG02b*	Release of radioactive supernate to the soil subsurface from the underground piping between the diversion box and the vent station due to piping system leak.	Failure of primary and encasement piping due to corrosion	Operator Training Operating Procedures Press/Leak Testing Transfer Piping	Emergency Response Plan/Proc
RCSTS-10/11-INTEG03a	Release of radioactive supernate to the soil from the underground piping between the diversion box and the vent station due to piping system leak.	Failure of primary and encasement piping due to external event (excavation accident)	None	None
RCSTS-10/11-INTEG03b*	Release of radioactive supernate to the atmosphere from the underground piping between the diversion box and the vent station due to excavation of piping system and subsequent leak.	Failure of primary and encasement piping due to external event (excavation accident)	None	Material Balance
RCSTS-10/11-INTEG04	Release of radioactive supernate to the soil from the underground piping between the diversion box and the vent station due to piping system leak.	Failure of primary and encasement piping due to external event (airplane crash, volcanism etc)	None	None
RCSTS-10/11-INTEG05a	Release of radioactive supernate to the soil from the underground piping between the diversion box and the vent station due to piping system leak.	Failure of primary and encasement piping due to unrecognized material flaw	None	None
RCSTS-10/11-INTEG05b*	Release of radioactive supernate to the soil subsurface from the underground piping between the diversion box and the vent station due to piping system leak.	Failure of primary and encasement piping due to unrecognized material flaw	Operator Training Operating Procedures Press/Leak Testing Transfer Piping	Emergency Response Plan/Proc

Table D-6. Defense In Depth Controls For Potentially Severe (E3 and E2) Environmental Consequences. (22 sheets)

ID	Hazardous Conditions	Cause	DID-Preventive	DID-Mitigative
RCSTS-10/11-INTEG06	Release of radioactive supernate to the soil from the underground piping between the diversion box and the vent station due to piping system leak.	Failure of primary and encasement piping due to seismic event	None	None
RCSTS-10/11-PRES01a	Release of radioactive supernate to the soil from the underground piping between the diversion box and the vent station due to piping system leak.	Failure of primary and encasement piping due to water hammer	None	None
RCSTS-10/11-PRES01b*	Release of radioactive supernate to the soil subsurface from the underground piping between the diversion box and the vent station due to piping system leak.	Failure of primary and encasement piping due to water hammer	Operator Training Operating Procedures Press/Leak Testing Transfer Piping	Emergency Response Plan/Proc
RCSTS-10/11-TEMP01	Release of radioactive supernate to the soil from the underground piping between the diversion box and the vent station due to piping system leak.	Failure of primary piping and encasement due to freezing	None	None
RCSTS-10/11-TEMP02	Release of radioactive supernate to the soil from the underground piping between the diversion box and the vent station due to piping system leak.	Failure of primary and encasement piping due to thermal stress	None	None
RCSTS-12/13-INTEG01	Release of radioactive supernate to the soil from the underground piping between the vent station and the 244-A Lift Station due to piping system leak.	Failure of primary and encasement piping due to external event (undermining from broken fluid transfer lines in vicinity)	None	None
RCSTS-12/13-INTEG02a	Release of radioactive supernate to the soil from the underground piping between the vent station and the 244-A Lift Station due to piping system leak.	Failure of primary and encasement piping due to corrosion	None	None
RCSTS-12/13-INTEG02b*	Release of radioactive supernate to the soil subsurface from the underground piping between the vent station and the 244-A Lift Station due to piping system leak.	Failure of primary and encasement piping due to corrosion	Operator Training Operating Procedures Press/Leak Testing Transfer Piping	Emergency Response Plan/Proc
RCSTS-12/13-INTEG03a	Release of radioactive supernate to the soil from the underground piping between the vent station and the 244-A Lift Station due to piping system leak.	Failure of primary and encasement piping due to external event (excavation accident)	None	None

Table D-6. Defense In Depth Controls For Potentially Severe (E3 and E2) Environmental Consequences. (22 sheets)

ID	Hazardous Conditions	Cause	DID-Preventive	DID-Mitigative
RCSTS-12/13-INTEG03b*	Release of radioactive supernate to the atmosphere from the underground piping between the vent station and the 244-A Lift Station due to excavation of piping system and subsequent leak.	Failure of primary and encasement piping due to external event (excavation accident)	None	Material Balance
RCSTS-12/13-INTEG04	Release of radioactive supernate to the soil from the underground piping between the vent station and the 244-A Lift Station due to piping system leak.	Failure of primary and encasement piping due to external event (airplane crash, volcanism etc)	None	None
RCSTS-12/13-INTEG05a	Release of radioactive supernate to the soil from the underground piping between the vent station and the 244-A Lift Station due to piping system leak.	Failure of primary and encasement piping due to unrecognized material flaw	None	None
RCSTS-12/13-INTEG05b*	Release of radioactive supernate to the soil subsurface from the underground piping between the vent station and the 244-A Lift Station due to piping system leak.	Failure of primary and encasement piping due to unrecognized material flaw	Operator Training Operating Procedures Press/Leak Testing Transfer Piping	Emergency Response Plan/Proc
RCSTS-12/13-INTEG06	Release of radioactive supernate to the soil from the underground piping between the vent station and the 244-A Lift Station due to piping system leak.	Failure of primary and encasement piping due to seismic event	None	None
RCSTS-12/13-PRESO1a	Release of radioactive supernate to the soil from the underground piping between the vent station and the 244-A Lift Station due to piping system leak.	Failure of primary and encasement piping due to steam hammer caused by loss of flushwater flow to steam mixing chamber in east	None	None
RCSTS-12/13-PRESO1b*	Release of radioactive supernate to the soil subsurface from the underground piping between the vent station and the 244-A Lift Station due to piping system leak.	Failure of primary and encasement piping due to steam hammer caused by loss of flushwater flow to steam mixing chamber in east area	Operator Training Operating Procedures Press/Leak Testing Transfer Piping	Emergency Response Plan/Proc
RCSTS-12/13-PRESO2	Release of radioactive supernate to the soil from the underground piping between the vent station and the 244-A Lift Station due to piping system leak.	Failure of primary and encasement piping due to water hammer	None	None
RCSTS-12/13-TEMPO1	Release of radioactive supernate to the soil from the underground piping between the vent station and the 244-A Lift Station due to piping system leak.	Failure of primary piping and encasement due to freezing	None	None

Table D-6. Defense In Depth Controls For Potentially Severe (E3 and E2) Environmental Consequences. (22 sheets)

ID	Hazardous Conditions	Cause	DID-Preventive	DID-Mitigative
RCSTS-12/13-TEMP02	Release of radioactive supernate to the soil from the underground piping between the vent station and the 244-A Lift Station due to piping system leak.	Failure of primary and encasement piping due to thermal stress	None	None
RCSTS-15/16-INTEG01a	Release of radioactive slurry to the soil surface from the underground piping between the SY-A or SY-B valve pit and a diversion box due to piping system leak.	Failure of primary and encasement piping due to corrosion	None	None
RCSTS-15/16-INTEG01b	Release of radioactive slurry to the soil surface from the underground piping between the SY-A or SY-B valve pit and a diversion box due to piping system leak.	Failure of primary and encasement piping due to unrecognized material flaw	None	None
RCSTS-15/16-INTEG02	Release of radioactive slurry to the soil surface from the underground piping between the SY-A or SY-B valve pit and the diversion box due to piping system leak.	Failure of primary and encasement piping due to external event (excavation accident)	None	None
RCSTS-15/16-INTEG03a	Release of radioactive slurry to the soil surface from the underground piping between the SY-A or SY-B valve pit and a diversion box due to piping system leak.	Failure of primary and encasement piping due to external event (undermining from broken fluid transfer lines in vicinity)	None	None
RCSTS-15/16-INTEG03b	Release of radioactive slurry to the soil surface from overflow of diversion box due to piping system leak.	Failure of piping due to external event (undermining from broken fluid transfer lines in vicinity)	None	None
RCSTS-15/16-INTEG04	Release of radioactive slurry to the soil surface from the underground piping between the SY-A or SY-B valve pit and the diversion box due to piping system leak.	Failure of primary and encasement piping due to seismic event	None	None
RCSTS-15/16-INTEG05	Release of radioactive slurry to the soil surface from the underground piping between the SY-A or SY-B valve pit and a diversion box due to piping system leak.	Failure of primary and encasement piping due to external event (airplane crash, volcanism, etc)	None	None
RCSTS-15/16-TEMP01	Release of radioactive slurry to the soil surface from the underground piping between the SY-A or SY-B valve pit and a diversion box due to piping system leak.	Failure of primary and encasement piping due to freezing	None	None

Table D-6. Defense In Depth Controls For Potentially Severe (E3 and E2) Environmental Consequences. (22 sheets)

ID	Hazardous Conditions	Cause	DID-Preventive	DID-Mitigative
RCSTS-18/19-INTEG01	Release of radioactive slurry to the soil from the underground piping between the diversion box and the vent station due to piping system leak.	Failure of primary and encasement piping due to external event (undermining from broken fluid transfer lines in vicinity)	None	None
RCSTS-18/19-INTEG02	Release of radioactive slurry to the soil from the underground piping between the diversion box and the vent station due to piping system leak.	Failure of primary and encasement piping due to corrosion	None	None
RCSTS-18/19-INTEG03a	Release of radioactive slurry to the soil from the underground piping between the diversion box and the vent station due to piping system leak.	Failure of primary and encasement piping due to external event (excavation accident)	None	None
RCSTS-18/19-INTEG03b*	Release of radioactive slurry to the atmosphere from the underground piping between the diversion box and the vent station due to excavation of piping system and subsequent leak.	Failure of primary and encasement piping due to external event (excavation accident)	None	Material Balance
RCSTS-18/19-INTEG04	Release of radioactive slurry to the soil from the underground piping between the diversion box and the vent station due to piping system leak.	Failure of primary and encasement piping due to external event (airplane crash, volcanism etc)	None	None
RCSTS-18/19-INTEG05	Release of radioactive slurry to the soil from the underground piping between the diversion box and the vent station due to piping system leak.	Failure of primary and encasement piping due to flammable gas explosion in primary piping	None	None
RCSTS-18/19-INTEG06	Release of radioactive slurry to the soil from the underground piping between the diversion box and the vent station due to piping system leak.	Failure of primary and encasement piping due to unrecognized material flaw	None	None
RCSTS-18/19-INTEG07	Release of radioactive slurry to the soil from the underground piping between the diversion box and the vent station due to piping system leak.	Failure of primary and encasement piping due to seismic event	None	None
RCSTS-18/19-PRES01	Release of radioactive slurry to the soil from the underground piping between the diversion box and the vent station due to piping system leak.	Failure of primary and encasement piping due to water hammer	None	None

Table D-6. Defense In Depth Controls For Potentially Severe (E3 and E2) Environmental Consequences. (22 sheets)

ID	Hazardous Conditions	Cause	DID-Preventive	DID-Mitigative
RCSTS-18/19-TEMP01	Release of radioactive slurry to the soil from the underground piping between the diversion box and the vent station due to piping system leak.	Failure of primary piping and encasement due to freezing	None	None
RCSTS-18/19-TEMP02	Release of radioactive slurry to the soil from the underground piping between the diversion box and the vent station due to piping system leak.	Failure of primary and encasement piping due to thermal stress	None	None
RCSTS-1FS-LEVEL03	Release of caustic solution and radionuclides to the sump pit from the water flush tank due to over filling of tank.	Overfilling of flush tank from flow of radioactive waste from transfer line. Block valves open, valve limit switch and pressure switch fail and administrative control of raw water block valves fail	None	None
RCSTS-22-PRESS01*	Release of radioactive aerosols to the atmosphere caused by spray leak of slurry from 244-A Lift Station due to piping system leak.	Dead heading of flow through the 244-A Lift Station with failure of PRV and development of crack in downstream piping	None	Trans Leak Detection: Material Balance
RCSTS-22-PRESS02*	Release of radioactive aerosols to the atmosphere caused by spray leak of supernate from 244-A Lift Station due to piping system leak.	Dead heading of flow through the 244-A Lift Station with failure of PRV and development of crack in downstream piping	None	Trans Leak Detection: Material Balance
RCSTS-22-PRESS03*	Release of radioactive supernate to soil surface from overflow of 244-A Lift Station due to piping break.	Dead heading of flow through the 244-A Lift Station with failure of PRV and subsequent downstream pipe failure	None	None
RCSTS-22-PRESS04*	Release of radioactive slurry to soil surface from overflow of 244-A Lift Station due to piping break.	Dead heading of flow through the 244-A Lift Station with failure of PRV and subsequent downstream pipe failure	None	None
RCSTS-24-FLOW/INTEG01	Release of radioactive slurry to soil surface from overflow of lift station due to piping system leak.	Failure of jumper due to corrosion	None	None
RCSTS-24-FLOW/INTEG02	Release of radioactive supernate to soil surface from overflow of 244-A Lift Station due to piping system leak.	Failure of jumper due to corrosion	None	None

Table D-6. Defense In Depth Controls For Potentially Severe (E3 and E2) Environmental Consequences. (22 sheets)

ID	Hazardous Conditions	Cause	DID-Preventive	DID-Mitigative
RCSTS-24-FLOW/INTEG03	Release of radioactive slurry to soil surface from overflow of lift station due to piping system leak.	Failure of jumper due to gasket failure	None	None
RCSTS-24-FLOW/INTEG04	Release of radioactive supernate to soil surface from overflow of 244-A Lift Station due to piping system leak.	Failure of jumper due to gasket failure	None	None
RCSTS-24-FLOW/INTEG05	Release of radioactive slurry to soil surface from overflow of lift station due to piping system leak.	Failure of jumper due to misalignment	None	None
RCSTS-24-FLOW/INTEG06	Release of radioactive supernate to soil surface from overflow of 244-A Lift Station due to piping system leak.	Failure of jumper due to misalignment	None	None
RCSTS-24-FLOW/INTEG07	Release of radioactive aerosols to the atmosphere caused by spray leak of slurry from lift station due to piping system leak.	Failure of jumper due to corrosion	None	Trans Leak Detection: Material Balance
RCSTS-24-FLOW/INTEG08	Release of radioactive aerosols to the atmosphere caused by spray leak of supernate from lift station due to piping system leak.	Failure of jumper due to corrosion	None	Trans Leak Detection: Material Balance
RCSTS-24-FLOW/INTEG09	Release of radioactive aerosols to the atmosphere caused by spray leak of slurry from lift station due to piping system leak.	Failure of jumper due to gasket failure	None	Trans Leak Detection: Material Balance
RCSTS-24-FLOW/INTEG10	Release of radioactive aerosols to the atmosphere caused by spray leak of supernate from lift station due to piping system leak.	Failure of jumper due to gasket failure	None	Trans Leak Detection: Material Balance
RCSTS-24-FLOW/INTEG11	Release of radioactive aerosols to the atmosphere caused by spray leak of slurry from lift station due to piping system leak.	Failure of jumper due to misalignment	None	Trans Leak Detection: Material Balance
RCSTS-24-FLOW/INTEG12	Release of radioactive aerosols to the atmosphere caused by spray leak of supernate from lift station due to piping system leak.	Failure of jumper due to misalignment	None	Trans Leak Detection: Material Balance
RCSTS-24-FLOW01	Release of radioactive slurry to soil surface from overflow of lift station due to piping system leak.	Computer failure or human error causing misrouting of material when flow path is not completely connected	None	None

Table D-6. Defense In Depth Controls For Potentially Severe (E3 and E2) Environmental Consequences. (22 sheets)

ID	Hazardous Conditions	Cause	DID-Preventive	DID-Mitigative
RCSTS-24-FLOW02	Release of radioactive supernate to soil surface from overflow of 244-A Lift Station due to piping system leak.	Computer failure or human error causing misrouting of material when flow path is not completely connected	None	None
RCSTS-24-FLOW03	Release of radioactive slurry to soil surface from overflow of lift station due to piping system leak.	External leak of valve or valves to the lift station	None	None
RCSTS-24-FLOW04	Release of radioactive supernate to soil surface from overflow of 244-A Lift Station due to piping system leak.	External leak of valve or valves to the lift station	None	None
RCSTS-24-FLOW05	Release of radioactive aerosols to the atmosphere caused by spray leak of slurry from lift station due to piping system leak.	Computer failure or human error causing misrouting of material when flow path is not completely connected	None	Trans Leak Detection: Material Balance
RCSTS-24-FLOW06	Release of radioactive aerosols to the atmosphere caused by spray leak of supernate from lift station due to piping system leak.	Computer failure or human error causing misrouting of material when flow path is not completely connected	None	Trans Leak Detection: Material Balance
RCSTS-24-FLOW07	Release of radioactive aerosols to the atmosphere caused by spray leak of slurry from lift station due to piping system leak.	External leak of valve or valves to the lift station	None	Trans Leak Detection: Material Balance
RCSTS-24-FLOW08	Release of radioactive aerosols to the atmosphere caused by spray leak of supernate from lift station due to piping system leak.	External leak of valve or valves to the lift station	None	Trans Leak Detection: Material Balance
RCSTS-24-INTEG01	Release of radioactive slurry to soil surface from overflow of lift station due to piping system leak.	External event (airplane crash, etc)	None	None
RCSTS-24-INTEG02	Release of radioactive supernate to soil surface from overflow of 244-A Lift Station due to piping system leak.	External event (airplane crash, etc)	None	None
RCSTS-24-INTEG03	Release of radioactive aerosols to the atmosphere from the lift station due to fire or explosion of flammable gas.	Fire or explosion in the lift station caused by buildup of flammable gas because of spill of supernate or slurry	None	None

Table D-6. Defense In Depth Controls For Potentially Severe (E3 and E2) Environmental Consequences. (22 sheets)

ID	Hazardous Conditions	Cause	DID-Preventive	DID-Mitigative
RCSTS-24-INTEG04	Release of radioactive slurry to soil surface from overflow of lift station due to piping system leak.	Seismic event	None	None
RCSTS-24-INTEG05	Release of radioactive supernate to soil surface from overflow of 244-A Lift Station due to piping system leak.	Seismic event	None	None
RCSTS-24-INTEG06	Release of radioactive aerosols to the atmosphere from the lift station due to fire or explosion of flammable gas.	Fire or explosion due to leakage of flammable gas due to pipe breach in slurry line caused by gas release from slurry	None	None
RCSTS-24-INTEG07	Release of radioactive aerosols to the atmosphere caused by spray leak of slurry from lift station due to piping system leak.	External event (airplane crash, etc)	None	Material Balance
RCSTS-24-INTEG08	Release of radioactive aerosols to the atmosphere caused by spray leak of supernate from lift station due to piping system leak.	External event (airplane crash, etc)	None	Material Balance
RCSTS-24-INTEG09	Release of radioactive aerosols to the atmosphere caused by spray leak of slurry from lift station due to piping system leak.	Seismic event	None	None
RCSTS-24-INTEG10	Release of radioactive aerosols to the atmosphere caused by spray leak of supernate from lift station due to piping system leak.	Seismic event	None	None
RCSTS-24-PRES01	Release of radioactive supernate to soil surface from overflow of 244-A Lift Station due to piping system leak.	Steam hammer or thermal stress caused by loss of flushwater flow to steam mixing chamber in east area	None	None
RCSTS-24-PRES02	Release of radioactive slurry to soil surface from overflow of lift station due to piping system leak.	Water hammer	None	None
RCSTS-24-PRES03	Release of radioactive supernate to soil surface from overflow of 244-A Lift Station due to piping system leak.	Water hammer	None	None

Table D-6. Defense In Depth Controls For Potentially Severe (E3 and E2) Environmental Consequences. (22 sheets)

ID	Hazardous Conditions	Cause	DID-Preventive	DID-Mitigative
RCSTS-2FS-FLOW01	Release of caustic solution spray to the atmosphere from the water flush system due to a transfer line break.	Line break (upstream of flush pump) due to structural failure	Operator Training TWRS Hazardous Mat Protect Prog	Emergency Response
RCSTS-2FS-FLOW02	Release of caustic solution spray to the atmosphere from the water flush system due to a transfer line break.	Line break (downstream of flush pump) due to structural failure	Operator Training TWRS Hazardous Mat Protect Prog	Emergency Response
RCSTS-2FS-FLOW03	Release of caustic solution spray to the atmosphere from the water flush system due to a transfer line break.	Line plug - before heaters due to debris buildup causing a pressure buildup and failure of line	Operator Training TWRS Hazardous Mat Protect Prog	Emergency Response
RCSTS-2FS-FLOW04	Release of caustic solution spray to the atmosphere from the water flush system due to a transfer line break.	Line plug - after heaters due to debris buildup causing pressure buildup at the heater and resulting in heater pipe failure	Operator Training TWRS Hazardous Mat Protect Prog	Emergency Response
RCSTS-2FS-FLOW05	Release of caustic solution spray to the atmosphere from the water flush system due to a relief valve failure.	Caustic injection pressure relief valve failure	Operator Training TWRS Hazardous Mat Protect Prog	Emergency Response
RCSTS-2FS-FLOW07	Release of caustic solution spray to the atmosphere from the water flush system due to a transfer line break.	Flush line break due to structural failure	Operator Training TWRS Hazardous Mat Protect Prog	Emergency Response
RCSTS-2FS-PRES01	Release of caustic solution spray to the atmosphere from the water flush system due line plug.	Flush line plug - before heaters due to debris buildup causing a pressure buildup and failure of line	Operator Training TWRS Hazardous Mat Protect Prog	Emergency Response
RCSTS-2FS-PRES02	Release of caustic solution spray to the atmosphere from the water flush system due to a line plug.	Flush line plug - after heaters due to debris buildup causing pressure buildup at the heater and resulting in heater pipe failure	Operator Training TWRS Hazardous Mat Protect Prog	Emergency Response
RCSTS-2FS-PRES03	Release of caustic solution spray to the atmosphere from the water flush system due to a line break.	Flush line break due to structural failure	Operator Training TWRS Hazardous Mat Protect Prog	Emergency Response

Table D-6. Defense In Depth Controls For Potentially Severe (E3 and E2) Environmental Consequences. (22 sheets)

ID	Hazardous Conditions	Cause	DID-Preventive	DID-Mitigative
RCSTS-2FS-TEMP01	Release of caustic solution spray to the atmosphere from the water flush system due to a line plug.	Flush line plug - before heaters due to debris buildup causing a pressure buildup and failure of line	Operator Training TWRS Hazardous Mat Protect Prog	Emergency Response
RCSTS-2FS-TEMP02	Release of caustic solution spray to the atmosphere from the water flush system due to freezing conditions.	Freezing weather with loss of heat trace function	Operator Training TWRS Hazardous Mat Protect Prog	Emergency Response
RCSTS-4FS-FLOW03	Release of caustic to the atmosphere from the caustic system due to pressure relief valve failing open.	Pressure relief valve fails open	Operator Training TWRS Hazardous Mat Protect Prog	Emergency Response
RCSTS-4FS-FLOW04	Release of caustic to the atmosphere from the caustic system due to over pressurization of line and failure of pressure relief valve to open.	Back pressure valve fails in closed position	Operator Training TWRS Hazardous Mat Protect Prog	Emergency Response
RCSTS-4FS-FLOW05	Release of caustic to the atmosphere from the caustic system due to line failure in chemical injection package.	Line failure/leak due to structural failure	Operator Training TWRS Hazardous Mat Protect Prog	Emergency Response
RCSTS-4FS-FLOW06	Release of caustic to the atmosphere from the caustic system due to a caustic system drain valve leak.	Caustic drain valve leak	Operator Training TWRS Hazardous Mat Protect Prog	Emergency Response
RCSTS-4FS-PRES/TEMP01	Release of caustic to the atmosphere from the caustic system due to pressure relief valve failing open.	Pressure relief valve fails open on caustic injection system.	Operator Training TWRS Hazardous Mat Protect Prog	Emergency Response
RCSTS-4FS-PRES/TEMP02	Release of caustic to the atmosphere from the caustic system due to pressure relief valve failing in closed position and rupture of line.	Back pressure relief valve fails in closed position.	Operator Training TWRS Hazardous Mat Protect Prog	Emergency Response
RCSTS-5FS-FLOW01	Release of caustic to the atmosphere from caustic line due to a line break.	Line break due to structural failure.	Operator Training TWRS Hazardous Mat Protect Prog	Emergency Response

Table D-6. Defense In Depth Controls For Potentially Severe (E3 and E2) Environmental Consequences. (22 sheets)

ID	Hazardous Conditions	Cause	DID-Preventive	DID-Mitigative
RCSTS-5FS-FLOW02	Release of caustic to the atmosphere from caustic line due to a line break.	Line plug due to debris buildup causing pressure buildup resulting in pipe failure.	Operator Training TWRS Hazardous Mat Protect Prog	Emergency Response

This document was too large to scan as a single document; therefore, it has been divided into smaller sections.

Section 10 of 10

Document Information			
Document #	SD-WM-BIO-001	Revision	1
Title	TWRS BASIS FOR INTERIM OPERATION		
Date	10/28/1998		
Originator	Y.G. NOORANI	Originator Co.	FDH
Recipient		Recipient Co.	
References	ECN-644566		
Keywords	AUTHORIZATION BASIS		
Projects	BIO,TWRS,TFARM,W-320		
Other Information	THIS SECTION CONTAINS VOLUME 6, ADDENDUM 3 & VOLUME 7, ADDENDUM 4		

HNF-SD-WM-BIO-001
Revision 1

Tank Waste Remediation System Basis for Interim Operation

Volume VI:
Addendum 3

Prepared by
DE&S Hanford, Inc. for Lockheed Martin Hanford Corporation

Date Published
September 1998

Prepared for the U.S. Department of Energy

FLUOR DANIEL HANFORD, INC.
Richland, Washington

Hanford Management and Integration Contractor for the
U.S. Department of Energy under Contract DE-AC06-96RL13200

Approved for Public Release; Further Dissemination Unlimited

702-AZ VENTILATION SYSTEM
(241-AZ-702)
SAFETY ANALYSIS

ADDENDUM 3

September 1998

This page intentionally left blank.

EXECUTIVE SUMMARY

ES.1 FACILITY BACKGROUND AND MISSION

The Aging Waste Facility (AWF) provides underground tank storage of high-level radioactive waste at the Hanford Site. The four tanks in the AWF require ventilation for confinement, cooling, and flammable gas mitigation. This document is the basis for the interim operation of the 241-AZ-702 ventilation system. The 241-AZ-702 ventilation system (28.3 m^3/min [1,000 scfm] maximum) replaces the existing 241-A-702 ventilation system (113.3 m^3/min [4,000 scfm] maximum). This document provides the safety analysis for closure of the Unreviewed Safety Question Evaluation (USQ TF-93-0055, *Tank Farm Ventilation Upgrade, Project W-030*) for this change to the AWF.

ES.2 SCOPE

This Addendum to the HNF-SD-WM-BIO-001, *Tank Waste Remediation System Basis for Interim Operation*, (BIO), document provides safety analysis for the operation of the 241-AZ-702 ventilation system for normal operations of the AWF.

ES.3 FACILITY OVERVIEW

The AWF, 241-AY and 241-AZ Tank Farms, are located in the 200 East Area of the Hanford Site as shown in Figure 1-1. The AWF is described in the BIO, Appendix B, "Facility and Process Description." A detailed description of the 241-AZ-702 ventilation system is found in Section 2.0 "Facility Description."

The 241-AZ-702 ventilation system provides a maximum 28.3 m^3/min (1,000 scfm) flow from the four tanks (2.83 m^3/min [100 scfm] nominal from each tank) as described in Section 2.5.1.2 of this addendum.

ES.4 FACILITY HAZARD CATEGORY

The AWF Tank Farms are identified in the BIO as Hazard Category 2 facilities.

ES.5 SAFETY ANALYSIS OVERVIEW

The operation of the 241-AZ-702 ventilation system is compared with the 29 accident analyses in the BIO and is found to be bounded by all accidents. In addition, before initial release of the BIO as part of the Authorization Basis, hazards associated with operation of the 241-AZ-702 ventilation system were evaluated using preliminary hazard analysis (PHA) and hazards and operability (HazOp) evaluation techniques. From the results of the hazard analysis, five accidents were identified as representative of the significant hazards. These accidents are the high-efficiency particulate air (HEPA) filter failure due to high temperature, HEPA filter failure due to high

pressure, Flammable Gas Deflagration, Tank Bump, and tank dome collapse. The risk evaluation guidelines are identified in Revision 1, Section 7.0, "Risk" of WHC-CM-4-46[1], *Safety Analysis Manual*.

An expansion of an existing BIO control unique to the 241-AZ-702 ventilation system is required to protect the assumption on the filter source term used in the comparisons with the BIO. It is required that the high-efficiency mist eliminator (HEME), assumed to be equivalent to four HEPA filter volumes, be monitored and replaced at $\leq$ 800 mrem/h. The high efficiency gas adsorber (HEGA) must be replaced before the upstream HEPA filter in the associated filter train has been replaced 20 times and when the upstream HEPA filter in the associated filter train is determined to have a particulate removal efficiency of < 99.95% by performance of an aerosol test, or other indication of degraded HEPA filter performance.

ES.6 ORGANIZATIONS

The AWF is part of the Tank Waste Remediation System which is operated by Lockheed Martin Hanford Corporation (LMHC) under contract to the Fluor Daniel Hanford, Inc. (FDH). This document was developed by Duke Engineering and Services Hanford, Incorporated (DESH) for LMHC.

ES.7 SAFETY ANALYSIS CONCLUSIONS

The findings of this document conclude that the 241-AZ-702 ventilation system provides those controls and features necessary and sufficient to ensure the protection of workers, the environment, and the public during its operation.

ES.8 DOCUMENT ORGANIZATION

This document is organized in the format of DOE-STD-3009-94, *Preparation Guide for U.S. Department of Energy Nonreactor Nuclear Facility Safety Analysis Reports*. For those sections where information would be provided about Site-wide programmatic controls, only the portions of those programs directly applicable to the 241-AZ-702 ventilation system are described. The remaining portions of the Addendum sections reference the BIO.

---

[1]Refer to Appendix F, "Site-wide Controlled Manual Cross Reference Table," of the BIO for cross-walk between Site-wide controlled manuals (e.g., WHC-CM-X-XX) superseded by Fluor Daniel Hanford, Inc., Procedures (e.g., HNF-PRO-XXX).

CONTENTS

1.0 SITE CHARACTERISTICS 1-1
1.1 INTRODUCTION 1-1
1.2 REQUIREMENTS 1-1
1.3 SITE DESCRIPTION 1-1
1.4 ENVIRONMENTAL DESCRIPTION 1-1
1.5 NATURAL PHENOMENA THREATS 1-2
1.6 EXTERNAL MAN-MADE THREATS 1-2
1.7 NEARBY FACILITIES 1-2
1.8 VALIDITY OF EXISTING ENVIRONMENTAL ANALYSES 1-2

2.0 FACILITY DESCRIPTION 2-1
2.1 INTRODUCTION 2-1
2.2 REQUIREMENTS 2-1
2.3 FACILITY OVERVIEW 2-1
2.4 FACILITY STRUCTURE 2-1
2.5 PROCESS DESCRIPTION 2-2
2.5.1 System Overview 2-2
2.5.2 Inlet Breather 2-8
2.5.3 Recirculation Ventilation Cooling 2-8
2.5.4 Common Exhaust System 2-11
2.5.5 Exhaust Stack 2-14
2.6 CONFINEMENT SYSTEMS 2-15
2.7 SAFETY SUPPORT SYSTEMS 2-15
2.7.1 Effluent Monitoring 2-15
2.7.2 Fire Protection Systems 2-16
2.8 UTILITY DISTRIBUTION SYSTEMS 2-16
2.8.1 Water Supply Systems 2-16
2.8.2 Electric Power Systems 2-17
2.9 AUXILIARY SYSTEMS AND SUPPORT FACILITIES 2-17

3.0 HAZARD AND ACCIDENT ANALYSES 3-1
3.1 INTRODUCTION 3-1
3.2 REQUIREMENTS 3-1
3.3 HAZARD ANALYSIS RESULTS 3-1
3.3.1 Methodology 3-2
3.3.2 Hazard Analysis Results 3-3
3.4 ACCIDENT ANALYSIS 3-6
3.4.1 Methodology 3-7
3.4.2 Design Basis Accidents 3-8
3.4.3 Beyond Evaluation Basis Accidents 3-18

4.0 SAFETY STRUCTURES, SYSTEMS, AND COMPONENTS 4-1
4.1 INTRODUCTION 4-1
4.2 REQUIREMENTS 4-1
4.3 SAFETY-CLASS STRUCTURES, SYSTEMS, AND COMPONENTS 4-1
4.3.1 Safety-Class Structures, Systems, and Components . . . 4-1
4.4 SAFETY-SIGNIFICANT STRUCTURES, SYSTEMS, AND COMPONENTS 4-3
4.4.1 Safety-Significant Structures, Systems, and Components 4-3

CONTENTS (Cont'd)

5.0 DERIVATION OF TECHNICAL SAFETY REQUIREMENTS 5-1
5.1 INTRODUCTION 5-1
5.2 REQUIREMENTS 5-1
5.3 TECHNICAL SAFETY REQUIREMENTS COVERAGE, AND DERIVATIONS . . . 5-1
5.4 DERIVATION OF FACILITY MODES 5-2
5.5 INTERFACE WITH TECHNICAL SAFETY REQUIREMENTS FROM OTHER FACILITIES 5-2

6.0 PREVENTION OF INADVERTENT CRITICALITY 6-1
6.1 REQUIREMENTS 6-1
6.2 FACILITY IMPLEMENTATION 6-1
6.3 PROJECT IMPLEMENTATION 6-1

7.0 RADIATION PROTECTION 7-1
7.1 REQUIREMENTS 7-1
7.2 FACILITY IMPLEMENTATION 7-1
7.3 PROJECT IMPLEMENTATION 7-1

8.0 HAZARDOUS MATERIAL PROTECTION 8-1
8.1 REQUIREMENTS 8-1
8.2 FACILITY IMPLEMENTATION 8-1
8.3 PROJECT IMPLEMENTATION 8-1

9.0 RADIOACTIVE AND HAZARDOUS WASTE MANAGEMENT 9-1
9.1 REQUIREMENTS 9-1
9.2 FACILITY IMPLEMENTATION 9-1
9.3 PROJECT IMPLEMENTATION 9-1

10.0 INITIAL TESTING, IN-SERVICE SURVEILLANCE, AND MAINTENANCE 10-1
10.1 REQUIREMENTS 10-1
10.2 FACILITY IMPLEMENTATION 10-1
10.3 PROJECT IMPLEMENTATION 10-1
10.3.1 Initial Testing 10-1
10.3.2 In-Service Surveillance 10-2
10.3.3 Maintenance 10-2

11.0 OPERATIONAL SAFETY 11-1
11.1 REQUIREMENTS 11-1
11.2 FACILITY IMPLEMENTATION 11-1
11.3 PROJECT IMPLEMENTATION 11-1

12.0 PROCEDURES AND TRAINING 12-1
12.1 REQUIREMENTS 12-1
12.2 FACILITY IMPLEMENTATION 12-1
12.3 PROJECT IMPLEMENTATION 12-1

13.0 HUMAN FACTORS 13-1
13.1 REQUIREMENTS 13-1
13.2 FACILITY IMPLEMENTATION 13-1
13.3 PROJECT IMPLEMENTATION 13-1

CONTENTS (Cont'd)

14.0 QUALITY ASSURANCE 14-1
14.1 REQUIREMENTS 14-1
14.2 FACILITY IMPLEMENTATION 14-1
14.3 PROJECT IMPLEMENTATION 14-1

15.0 EMERGENCY PREPAREDNESS PROGRAM 15-1
15.1 REQUIREMENTS 15-1
15.2 FACILITY IMPLEMENTATION 15-1
15.3 PROJECT IMPLEMENTATION 15-1

16.0 PROVISIONS FOR DECONTAMINATION AND DECOMMISSIONING 16-1
16.1 REQUIREMENTS 16-1
16.2 IMPLEMENTATION 16-1
16.3 PROJECT IMPLEMENTATION 16-1

17.0 MANAGEMENT, ORGANIZATION, AND INSTITUTIONAL SAFETY PROVISIONS . . . 17-1
17.1 REQUIREMENTS 17-1
17.2 FACILITY IMPLEMENTATION 17-1
17.3 PROJECT IMPLEMENTATION 17-1

18.0 REFERENCES 18-1

APPENDICES

A HAZARD BASIS A-1
B HAZARD ANALYSIS SUMMARY B-1
B1.0 HAZARD ANALYSIS SUMMARY B-3
B2.0 METHODOLOGY B-4
B.2.1 Hazard Identification B-4
B.2.1.1 Loss of Containment/Confinement B-4
B.2.1.2 Loss of Confinement B-4
B.2.1.3 Waste Disposal B-4
B.2.1.4 Criticality B-5
B.2.1.5 Natural Phenomena B-5
B.2.1.6 Fire and Explosion B-5
B.2.1.7 Interfaces B-5
B.2.1.8 Maintenance and Testing B-5
B.2.2 Hazard Evaluation B-5
B.2.3 Hazard Evaluation Results B-6
C HAZARD EVALUATION RESULT C-1
D CONTROL ALLOCATION TABLES D-1

ATTACHMENT

B-1 LETTER REPORT TRANSMITTAL LETTER . . . . . ATT B-1

LIST OF FIGURES

1-1 The 200 East Area F1-1

2-1 241-AZ-702 Ventilation System Building and Equipment Additions . . F2-1

2-2 Building 241-AZ-702 First Floor Plan F2-2

2-3 Building 241-AZ-702 Second Floor and Roof Plan F2-3

2-4 Generator/Service Building Floor Plan, 701-AZ F2-4

2-5 Control Building, 241-AZ-271 Plan View F2-5

2-6 Project W-030 Ventilation Upgrade System F2-6

2-7 Recirculation Flow F2-7

2-8 Bypass Flow F2-8

2-9 High Heat Flow F2-9

LIST OF TABLES

2-1 241-AZ-702 Ventilation System Design Heat Loads and Tank Waste Temperatures T2-1

2-2 Detailed Description of 241-AZ-702 Ventilation System TMACs Instrumentation Connections T2-2

3-1 Aging Waste Facility Hazards Identification T3-1

3-2 Tank Waste Liquids and Solids Analyte Concentrations T3-2

3-3 Headspace Gas Composite Concentrations T3-3

3-4 In-Tank Concentrations of the 11 Radionuclides Chosen for Inclusion in Accident Analysis T3-4

3-5 Flammable Gas Generation Rates T3-4

3-6 Aging Waste Facility Energy Sources T3-5

3-7 BIO Accident Comparison Summary T3-6

3-8 Radiological Risk Guidelines 3-9

3-9 Toxicological Risk Evaluation Guidelines 3-9

4-1 Safety-Class SSCs for the 241-AZ-702 Ventilation System T4-1

A-1 Event Categories and Relationship to Hazard Energy and Material Sources TA-1

B-1 Hazards Analysis Summary TB-1

B-2 HazOp Definition Guide TB-31

B-3 Frequency Evaluation Levels TB-32

B-4 Radiological and Chemical Consequence Evaluation Levels for Hazard Receptors TB-32

B-5 Risk Binning Matrix TB-33

B-6 Energy Source Checklist from DOE TB-34

B-7 Summary of Hazardous Events TB-38

LIST OF ABBREVIATIONS

AC	Administrative Control
ALARA	As Low As Reasonably Achievable
ALC	airlift circulator
AMCA	Air Movement Contractor Association
AWF	Aging Waste Facility
ASME	American Society of Mechanical Engineers
ATP	acceptance test procedure
BEU	beyond extremely unlikely
BIO	Basis for Interim Operation
CAM	continuous air monitor
CGM	combustible gas meter
D&D	decontamination and decommissioning
DBA	design basis accidents
DCRT	double-contained receiver tanks
DESH	Duke Engineering and Services, Hanford Incorporated
DOE	U.S. Department of Energy
DST	double-shell tank
EIS	Environmental Impact Statement
ERPG	Emergency Response Planning Guideline
EWS	export water system
FDH	Fluor Daniel Hanford, Inc.
FGEAB	Flammable Gas Equipment Advisory Board
FG JCO	Flammable Gas Justification for Continued Operation
FHA	fire hazards analysis
GC	gas chromatograph
GFCI	ground fault circuit interrupters
GRE	gas release event
HazOp	hazard and operability study
HEGA	high-efficiency gas adsorber
HEME	high-efficiency mist eliminator
HEPA	high-efficiency particulate air (filter)
HVAC	Heating, Ventilation, and Air Conditioning
IOSR	Interim Operational Safety Requirement
LCO	Limiting Condition for Operation
LFL	Lower Flammability Limit
LMHC	Lockheed Martin Hanford Corporation
MCC	motor control center
MCS	monitor and control system
MOV	motor-operated valve
NFPA	National Fire Protection Association
NESHAP	National Emission Standards for Hazardous Air Pollutants
OSD	Operating Specification Document
OTP	operational test procedures
OVM	Organic Vapor Meter

LIST OF ABBREVIATIONS (Cont'd)

PEL-TWA	permissible exposure limit-time weighted average
PFP	Plutonium Finishing Plant (Z Plant)
PHA	preliminary hazard analysis
PIC	person-in-charge
POTP	pre-operational test procedures
PUREX	Plutonium Uranium Extraction (facility)
RCT	radiological control technician
RWS	raw water system
SDC	Standard Design Criteria
SHMS	Standard Hydrogen Monitoring System
SL	Safety Limit
SSC	structure, system, and component
SST	single-shell tank
SWS	Sanitary Water System
TMACS	Tank Monitoring and Control System
TOC	total organic carbon
TSR	Technical Safety Requirements
TWRS	Tank Waste Remediation System
UL	Underwriters Laboratories
ULD	unit liter dose
USQ	Unreviewed Safety Question
WG	water gauge

This page intentionally left blank.

1.0 SITE CHARACTERISTICS

1.1 INTRODUCTION

This section describes the Hanford Site characteristics applicable to the Aging Waste Facility (AWF) ventilation upgrade project (Project W-030) at the Tank Waste Remediation System (TWRS) facilities. The ventilation upgrade is referred to as the 241-AZ-702 ventilation system. The AWF is located in the 200 East Area of the Hanford Site.

It is not the intent of this section to provide all of the information required by the guidance of DOE-STD-3009-94, but to provide the information necessary to describe the facility's location, and critical parameters used in Section 3.0, "Hazard and Accident Analyses."

1.2 REQUIREMENTS

The following standards, regulations, and U.S. Department of Energy (DOE) Orders establish the site characterization requirements for support of safety analysis and design unique to 241-AZ-702 ventilation system.

- DOE 4700.1, *Project Management System*, Change 1 (1992)
- HPS-SDC 4.1, Hanford Plant Standards, Revision 11, (for natural phenomena loading).

Additional requirements related to site characteristics can be found in HNF-SD-WM-BIO-001, Appendix C, "Site Characteristics," Section C1.2, "Requirements."

1.3 SITE DESCRIPTION

This section addresses the site boundary and site location with respect to the AWF. See the BIO, Appendix C, Section C1.3, "Site Description" for site geography, general site description and demography.

The TWRS AWF is located in the 200 East Area of the Hanford Site (Figure 1-1). For this analysis, the site boundary used for calculations is 8.7 km (5.44 mi) to the north (the near side of the Columbia River) (BIO, Section 5.3.1, "Methodology.")

1.4 ENVIRONMENTAL DESCRIPTION

The meteorological, hydrological and geological characteristics of the site, in conjunction with the 241-AZ-702 ventilation system, do not create any new, unique hazards for the 241-AZ-702 ventilation system (BIO, Appendix C, Section C1.4, "Environmental Description").

1.5 NATURAL PHENOMENA THREATS

No changes result from the installation or operation of the 241-AZ-702 ventilation system. See BIO, Appendix C, Section C1.5, "Natural Phenomena Threats," for the description of the natural phenomena threats.

1.6 EXTERNAL MAN-MADE THREATS

There are no unique external man-made threats for the 241-AZ-702 ventilation system (BIO, Appendix C, Section C1.6, "External Man-made Threats").

1.7 NEARBY FACILITIES

Accidents attributed to nearby facilities are discussed in BIO, Appendix C, Section C1.7, "Nearby Facilities." There are no unique accidents from nearby facilities identified for the 241-AZ-702 ventilation system.

The AWF accidents with the potential to affect the onsite individual at 100 m (which may include persons at some of the facilities discussed in the BIO, Appendix C, Section C1.7) are discussed in Section 3.0.

1.8 VALIDITY OF EXISTING ENVIRONMENTAL ANALYSES

The 241-AZ-702 ventilation system was evaluated in WHC-SD-W030-EE-001, *Environmental Evaluation*, and found to be within the scope of the existing Environmental Impact Statement, DOE/EIS-0113, *Final Environmental Impact Statement: Disposal of Hanford Defense High-Level, Transuranic, and Tank Waste, Hanford Site, Richland, Washington.* The consequences of all analyzed accidents for the project do not create any additional and unreviewed insults to the environment. In fact, WHC-SD-W030-EE-001 shows that normal operations of this system enhance environmental compliance by reducing liquid effluents. The system design requirements were based on analyses to meet environmental requirements and therefore provide compliance with 40 CFR 61, "National Emission Standards for Hazardous Air Pollutants (NESHAP)," *Code of Federal Regulations*, (NESHAPs) by reducing stack effluents.

Figure 1-1. The 200 East Area.

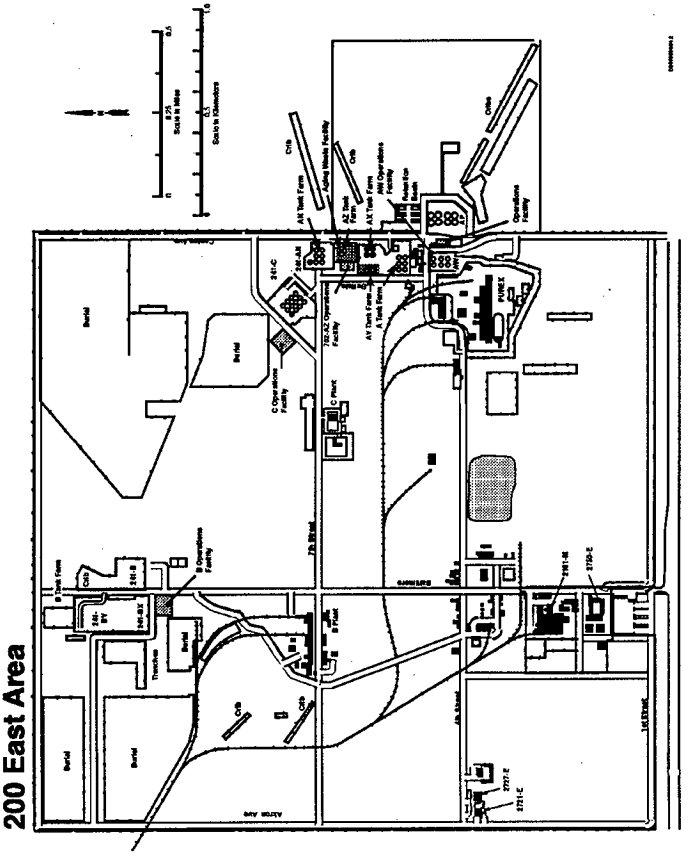

This page intentionally left blank.

2.0 FACILITY DESCRIPTION

2.1 INTRODUCTION

The purpose of this section is to provide a general description of the 241-AZ-702 ventilation system. Defense-in-Depth and Safety-Class or Safety-Significant structures, systems, and components (SSCs) are addressed in Sections 3.0, "Hazard and Accident Analyses," and 4.0, "Safety Structure, Systems, and Components," of this addendum.

The 241-AZ-702 ventilation system safety documentation does not include in its scope the operation of the Project W-151 mixer pump in Tank 241-AZ-101 nor the Project W-320 activities for the receipt of waste from Tank 241-C-106. Each of these projects is preparing separate safety documentation.

2.2 REQUIREMENTS

The design codes, standards, regulations, and U.S. Department of Energy (DOE) Orders relevant to the design and construction of the 241-AZ-702 ventilation system are listed in the functional design criteria, WHC-SD-600-FDC-001, *Functional Design Criteria for the Tank Farm Ventilation Upgrade, Project W-030*. The safety SSCs were designed to DOE 6430.1A, *General Design Criteria*, as SC-2. After the system was designed and built, the safety analysis required changing some of these to SC-1. See Section 4.0 of this addendum for details.

2.3 FACILITY OVERVIEW

The Aging Waste Facility (AWF), 241-AY and 241-AZ Tank Farms, is located in the 200 East Area of the Hanford Site in a complex of tank farms known as the Plutonium Uranium Extraction (Facility) (PUREX) 241-A Tank Farm Complex, situated to the northeast of the PUREX Plant. As shown in Figure 1-1, the 241-AZ Tank Farm is located in the northernmost fringe of the 241-A Tank Farm Complex. The 241-AY Tank Farm is located southwest of the 241-AZ tanks west of AX Tank Farm. The 241-AZ-702 ventilation system supports the currently defined mission of waste storage for the AWF.

2.4 FACILITY STRUCTURE

The 241-AZ-702 ventilation system includes three new buildings: a ventilation building, a generator/service building, and a control building. It also includes four recirculation/cooling cells. The location of the new buildings and cells are shown on Figure 2-1. The ventilation, generator/service, and control buildings were designed to DOE 6430.1A and Hanford Plant Standard SDC 4.1, *Architectural - Civil Design Criteria, Design Loads for Facilities*, as described in the functional design criteria for 241-AZ-702 (WHC-SD-600-FDC-001). Floor plans for these buildings and facility are shown in Figures 2-2 through 2-5.

The new ventilation building houses the primary tank ventilation equipment, including condensers, high-efficiency mist eliminator (HEME), heater coils, high-efficiency particulate air (HEPA) filters, high-efficiency gas adsorbers (HEGAs), fans, near isokinetic stack sampling, continuous air monitoring instruments, and ventilation facility local control units. The ventilation building has a floor area of approximately 1394 m^2 (15,000 ft^2) and is made of cast-in-place reinforced concrete. The building has four exterior doors. Two of these doors have a double door arrangement. Doors, frames, and hardware are designed to maintain a negative pressure inside the building.

The new generator/service building houses one diesel generator and standby power distribution equipment. Backflow preventers, strainers, and flow meters for the raw water supply are located in the service room. The generator/service building has a floor area of approximately 288 m^2 (3,100 ft^2) and is made of cast-in-place reinforced concrete. The building is constructed of non-combustible materials.

The control building is a prefabricated metal structure on a reinforced concrete slab. The control building houses the automated control and indication information such as tank head space pressure.

The recirculation/cooling cells house the process cooling equipment for recirculation cooling of the tank ventilation off gas. The process equipment included is a shell-and-tube heat exchanger, moisture separator, electric motor driven fan, flow control valve, miscellaneous remote/manual actuated valves, interconnecting piping and instrumentation. The cells were constructed of reinforced concrete with outside dimensions of 4.6 m (15 ft) by 4.9 m (16 ft) by 3.4 m (11 ft) high. A cover block is provided in the roof for future removal of the heat exchanger. A steel door is provided for personnel access into the cell for maintenance. The cell has capped connections for hookup of temporary ventilation when personnel access is required.

2.5 PROCESS DESCRIPTION

The activities and operations performed within the AWF include waste storage, transfer, characterization, concentration, and other miscellaneous activities. Other than tank ventilation, the 241-AZ-702 ventilation system does not impact the currently-defined storage mission or the basic processes in use in the facility. This section describes the new ventilation system process.

2.5.1 System Overview

2.5.1.1 System Functional Overview

2.5.1.1.1 Confinement and Heat Removal. The 241-AZ-702 ventilation system provides uninterrupted operations during normal operation, maintenance or testing. Selected components of the 241-AZ-702 tank ventilation system are redundant. Automatic transfer of ventilation system functions from the

primary system components to the redundant system components is provided. Transfer of functions is activated at the first indication of system failure to prevent the loss of system confinement.

The 241-AZ-702 ventilation system is sized such that a negative differential pressure with respect to atmospheric pressure can be maintained under normal operating conditions to contain radioactive and non-radioactive gases, vapors, suspended droplets, and airborne particulates within the system until appropriately treated and discharged. Sufficient controls are provided to maintain the tank at less than atmospheric pressure. The primary tank ventilation system is capable of removing heat and water vapor from the tank vapor space, and compensate for normal air infiltration and process air introduced into the tank through the airlift circulators. Pressure sensors in the head space of each tank provide pressure indication in the control room and on strip chart recorders in the instrumentation buildings, 241-AY-801 and 241-AZ-801.

Heat removal is provided primarily by recirculation ventilation cooling with some additional cooling provided by once through air flow. See Table 2-1 for system heat removal and operating temperatures.

The 241-AZ-702 ventilation system does not compromise the present tank operating capabilities and requirements. Features provided by the 241-AZ-702 ventilation system are listed below:

- Active and/or passive cold weather protection for all new heating, ventilation, and air conditioning (HVAC) instrumentation, duct work, fans, exhaust stacks, drains, and sealpots.
- Features to prevent moisture accumulation on HEPA filters (e.g., deentrainers, HEME filters).
- Provisions for measuring pressure differential across, and in-place testing of, individual filters in accordance with American Society of Mechanical Engineers (ASME) N510, *Testing of Nuclear Air Treatment Systems*; gauges and instruments are located and/or suitably protected to prevent moisture accumulation.
- Electrical equipment enclosures with temperature controls to provide a suitable environment for the installed equipment.
- Safe access provided to all areas of operation, including ladders, walkways, platforms, as applicable.
- Stack airflow and discharge volume measurement.
- Near isokinetic particulate sampling for the exhaust stack.
- Features (HEME, condenser, and recirculation system) to prevent ammonium nitrate or other soluble compound accumulation on the filters.

- Instrumentation to provide monitoring of the equipment operation for each stage of exhaust treatment and ports for future additional monitoring and control.

- A HEGA to remove organic carbon vapors and iodine gas.

2.5.1.1.2 Air Cleaning and Treatment. Exhaust air from the primary tank system is treated to minimize releases of radioactive and hazardous effluents to the atmosphere. The filtered airstream is continuously sampled for radioactive and known hazardous substances, and continuously monitored for gross beta and gamma. Instruments record radioactive releases and alarm before allowable radioactive release limits are exceeded.

The listing of radioactive and hazardous effluents to the atmosphere to be measured can be found in Bauer (1994a and 1994b). These documents are the Notices for Construction sent from the DOE to the Environmental Protection Agency and the Washington State Department of Ecology, respectively.

2.5.1.1.3 Condensate Collection and Disposal. Water vapor removed from the tanks is condensed, and the condensate is returned to AY and/or AZ high heat tanks. The design for condensate collection and disposal complies with WAC-173-460, "Controls for New Sources of Toxic Air Pollutants," as amended, and 40 CFR 61, "National Emission Standards for Hazardous Air Pollutants (NESHAP)," *Code of Federal Regulations*, as amended.

2.5.1.1.4 Monitoring and Control. A new instrument/control center is provided to house the new instrumentation for the tank ventilation. Environmental controls are provided for the new facility, commensurate with the requirements for equipment to be installed.

Instrumentation is installed to provide safe and reliable operation of the tank ventilation system and standby power systems. Continuous air monitors (CAM) and record air samplers are provided on the primary tank ventilation system to detect and measure hazardous and/or radioactive releases to the atmosphere, with alarms for low flow conditions and for loss of sample flow. The alarms are separate and distinct from that used for high radiation. Stack record air sampling is continuous and representative of the airflow in the duct work. The flow meters are Safety-Class instrumentation for the 241-AZ-702 ventilation system (HNF-SD-WM-SEL-040, *TWRS Facility Safety Equipment List*).

Temperature and leak detector alarms and signals are sent to the Tank Monitoring and Control System (TMACS) (Table 2-2). New instrument and electrical wire runs are enclosed in separate raceways where practicable and to facilitate future mission flexibility.

Instrumentation that has alarm features, are designed to alarm on loss of signal.

2.5.1.2 System Design Overview. The Primary Tank Ventilation System for the 241-AY-101, 241-AY-102, 241-AZ-101, and 241-AZ-102 tanks contains individually controlled air inlets, independent cooling systems, and a common ventilation off gas exhaust. A functional overview of the 241-AZ-702 ventilation system is found in Figure 2-6.

The tank ventilation off gas from each tank is exhausted through a flow control valve, processed through a condenser, mist eliminator, heater, and then filtered before being exhausted to the atmosphere through a stack. The filter/fan train is redundant to maintain tank pressures during anticipated maintenance shutdowns or component failure. Likewise, the flow control valve can be bypassed during anticipated maintenance shutdowns or valve failure.

The entire system is automatically controlled by the monitor and control system (MCS). Should the MCS fail, the ventilation system will remain in its current state but can then be run manually. The approach will be to shut down all ancillary equipment and to manually operate primary exhaust fans while monitoring the primary stack CAM and tank pressure instrumentation. The failure of the computer controlled equipment, from an individual component to an entire system failure, has appropriate alarm response procedures and guidance to the operators' actions to restore the system to a safe configuration and restore primary tank ventilation. Once stable operation is achieved, the remainder of the system would be restored.

The Primary Tank Ventilation System performs the following functions:

- Provides filtered inlet air for tank cooling and gas dilution for any flammable gases
- Maintains a negative pressure in the waste storage tanks of approximately 3 to 8 cm (1 to 3 in.) water gauge during normal operation
- Provides cooling-condensing of the off gas streams for tritium removal, in a recirculation loop for each tank.
- Removes particulates and condensable vapors from the radioactive off gas streams
- Exhausts the primary tank ventilation stream from the four tanks to the atmosphere through a primary exhaust stack
- Monitors exhaust emissions.

The system has three operating modes: 1) recirculation (Figure 2-7), 2) bypass (Figure 2-8), and 3) high heat (Figure 2-9). The alignment of the ventilation system on any one tank is independent of the alignment of the ventilation system on the other tanks:

1. Each tank's recirculation mode directs tank headspace gases through their respective Recirculation Ventilation Cooling System with, typically, 80% of the airstream returned back into the tank and 20% to the common exhaust system. The common exhaust system draws enough air to maintain a negative pressure in all of the tanks, relative to atmospheric pressure, with the majority of the flow back to the tank. The air flow through the recirculation loop is fixed by equipment design, however each tank's exhaust flow rate is actively-controlled and held constant.

2. The bypass mode directs tank headspace gases directly to the common exhaust system, bypassing the Recirculation Ventilation Cooling System.

3. The high heat mode directs tank headspace gases through the Recirculation Ventilation Cooling System then into the common exhaust system with no air returning to the tank. When any tank is in the high heat mode, the common exhaust fan flow is increased in order to increase evaporative cooling of the tank operating in high heat mode. Exhaust flow is routed through the Recirculation Ventilation Cooling System to help remove moisture.

Operation of the three modes is controlled with valving within the duct work. The selection of the operating mode is manually established. The operating mode is thus established by the configuration of the valves in the recirculation system. The lineups and flow paths of the different operating modes are illustrated in Figures 2-7, 2-8, and 2-9.

Normal operation, with all of the recirculation systems available, results in 14.2 m^3/min (500 scfm) being withdrawn from each tank. In this case, 80%, or 11.3 m^3/min (400 scfm), is returned to the tank while the remaining 20%, or 2.8 m^3/min (100 scfm), goes out the stack. This 2.8 m^3/min (100 scfm) is compensated by introducing atmospheric air through the inlet filter system into the tank. This results in 56.6 m^3/min (2,000 scfm) being withdrawn from the four AWF tanks and only 11.3 m^3/min (400 scfm) going into the main ventilation system. Each tank can be set at a different flow rate (e.g., one tank could be set to send 17.0 m^3/min [600 scfm] to the main ventilation system, and each of the others can be set at 2.8 m^3/min [100 scfm], for a total flow of 25.5 m^3/min [900 scfm] at the main ventilation system). The total ventilation flow is limited by the system capacity of 28.3 m^3/min (1,000 scfm). Each 241-AZ-702 fan is capable of 59.8 mmHg (32 in. WG) vacuum at peak. The recirculation fans add 33 mmHg (17.5 in. WG) vacuum at peak.

The airlift circulators (ALCs) are designed to operate at a minimum of 1.6 m^3/min (55 scfm) with normal operation of 2.3 m^3/min (80 scfm) for each tank. The maximum airflow for one tank is 12.5 m^3/min (440 scfm). The total ALC compressor capacity for all of the AWF tanks is limited to either 11.3 m^3/min (400 scfm) or 14.2 m^3/min (500 scfm) depending on whether the primary or backup compressor is being used. This additional ALC airflow remains within the operating capacity for the 241-AZ-702 ventilation system since the flow can be adjusted for each tank.

Instrumentation is provided at each tank to monitor and control pressure. The MCS is provided with its own uninterruptible power supply that ensures the MCS remains operational while the diesel generator comes on line. The diesel generator provides the backup electric power to the exhaust fans which are safety equipment (HNF-SD-WM-SEL-040).

Because flammable gas generation is a concern during the operation of any equipment with direct communication with the tank headspace, such equipment is required to meet National Fire Protection Association (NFPA) Class 1 Division 2 criteria or its equivalent (BIO, Appendix E, "Flammable Gas/Slurry Growth Unreviewed Safety Question: Justification for Continued Operation for

the Tank Farms at the Hanford Site [FG JCO])." The 241-AZ-702 equipment meets these requirements before the first mixing point as defined in the FG JCO through compliance with the Flammable Gas Equipment Advisory Board (FGEAB) direction. The board reviewed three aspects of the 241-AZ-702 ventilation system: 1) the equipment before the first mixing point (Inlet Filter Arrangement and Recirculation Module), 2) the equipment after the first mixing point, and 3) tie-ins related to construction. The board's directions are summarized below.

- Inlet Filter Arrangement
  - Equipment not listed below complies with the FG JCO.
  - Heater, control/electrical Box, HEPA filter differential pressure switch and heat trace require either modifications or de-energizing during waste disturbing activities (FGEAB 97-005a, "Operation of new ventilation system to support the AWF (INLET FILTER ARRANGEMENT)" [FGEAB 1997]). The heater has been modified per the directions and the others will be de-energized as directed.
- Recirculation Module
  - Equipment not listed below either complies with the FG JCO requirements or is beyond the first mixing point.
  - The fans require modification. The board directed a stop plate near the sheave to prevent axial movement of the shaft and this modification was performed (FGEAB 97-005b, "Operation of New Ventilation System to Support the Aging Waste Facility (RE-CIRCULATION MODULE)" [FGEAB 1997]).
- Equipment Beyond First Mixing Point
  - No requirements are on this equipment (FGEAB 97-031, "Project W-030, Activity and equipment located after the first mixing point" [FGEAB 1997]).

The 241-AZ-702 ventilation system equipment complies with the board's recommendations. Another report was issued dealing with the tie-in activities (FGEAB 97-005c, "Hot Tie-in of the New Ventilation System to Support the Aging Waste Facility" [FGEAB 1997]). Although performed before the issuance of the FG JCO and determination of the AWF tank Facility Group (all are Facility Group 2 tanks), a mixing study was performed for the 241-AZ-702 ventilation system that corroborates the board's findings (WHC-SD-WM-ER-592, *Assessment of the Project W-030 Ventilation System Following a Hypothetical Gas Release Event*).

2.5.2 Inlet Breather

The tank air inlet breather, installed on each of the AWF tanks, consists of a heater, prefilter, HEPA filter, flow control valve, flow meter, and a vacuum relief valve. The functions performed by these components are described below.

- The heaters protect the pre-filters from excessive humidity or frost.
- The prefilters protect the HEPA filters from excessive particulate loading that would shorten their lives.
- The HEPA filters protect the environment against potential backflow from the waste tank inlet.
- The flow control valves are automatically modulated to maintain a negative pressure range in the waste storage tanks.
- The flow meters monitor air flow into each of the waste storage tanks.
- The vacuum relief valves are provided to prevent excessive negative pressure in the waste storage tank. The vacuum relief valves have direct communication between the tank vapor space and the atmosphere. The valves are actuated before a pressure of 1.49 kPa (-6 in. WG) by a diaphragm that senses tank pressure.

2.5.3 Recirculation Ventilation Cooling

The four Recirculation Ventilation Cooling systems help to reduce moisture and remove the heat generated in the tanks. The cooling equipment for each tank is located in concrete vaults. This system consists of four basic parts: 1) ductwork, 2) the condenser, 3) the Recirculation Ventilation Cooling Module, and 4) the Evaporator Cooling Tower. The vaults are reinforced concrete structures with equipment access from the top and personnel access through a door. The Recirculation Ventilation Cooling Module does not have backup power. Backup power is not needed because if the Recirculation Ventilation Cooling Module fails, once-through cooling is sufficient to maintain tank temperature below limits (Table 2-1).

There is an independent recirculation cooling system for each tank in the AWF. Each system is similar in design but differs in cooling capacity. The cooling capacity for Tank 241-AZ-101 is higher than the other three tanks (i.e., the evaporative cooling tower has a higher capacity). A continuous cable leak detection system is located around the condenser, moisture separator, and recirculation fan to sense condensate leaks. An alarm is activated upon leak detection.

2.5.3.1 Duct Work. The duct work of the recirculation cooling sub-system provides gas and moisture confinement for the exhaust stream during the cooling process. The duct work is buried, double-encased piping with 35.6 cm (14-in.) carbon steel pipe around 25.4 cm (10-in.) stainless steel pipe. The

buried ducting is cathodically protected with an active system. A leak detector is located at the low spot of both the inlet and outlet encased piping to the waste tanks. The detector monitors for liquid condensate that has entered the encasement (presumably from a leaking liner pipe). When a leak is detected, an alarm is activated (e.g., alarm to the control room) and corrective action is taken according to the requirements of the radioactive and hazardous waste management program (HNF-SD-WM-BIO-001, Section 4.6, "Radioactive and Hazardous Material Waste Management"). This corrective action in the case of the 241-AZ-702 ventilation system is in the form of pumping out the encasement.

2.5.3.2 Recirculation Ventilation Cooling Module. The recirculation ventilation cooling module consists of the following:

- Condenser
- Recirculation Fan
- Moisture Separator.

2.5.3.2.1 Condenser. Each condenser is a shell-and-tube heat exchanger. The ventilation gas stream is cooled by circulating 1,900 L (500 gal) of 50% propylene glycol, 50% water solution through the tubes. This 50/50 mixture cannot be demonstrated to have a flashpoint. Condensate collected in the condenser is drained back to the tank by means of a drain line that is connected to the return ventilation duct. The drain line is isolated from the ventilation duct by a seal loop. Instrumentation monitors differential pressure across the condenser, inlet temperature, and outlet temperature.

2.5.3.2.2 Recirculation Fan. Each recirculation fan is single housing, single impeller, centrifugal type, non-overloading, and direct driven by an electric motor. Each fan operates at 14 m^3/min (500 scfm). The recirculation fan circulates the tank headspace gases through the Recirculation Ventilation Cooling Module.

Instrumentation is provided to monitor motor current and differential pressure across the fan. A low differential pressure across the condenser indicates that the fan is not operating properly and activates an alarm. Flow meters monitor air flow from each of the waste storage tanks.

2.5.3.2.3 Moisture Separator. Each vertical gas-liquid separator is designed to remove entrained liquid, which prevents erosion of the fan wheel. The separator removes liquids from the air stream by centrifugal force and gravity. Moisture removed from the exhaust stream drains by gravity back to the tank along the return ventilation duct. The drain line from the condenser to the ventilation duct is isolated by a seal loop.

2.5.3.3 Evaporator Cooling Tower. The Evaporator Cooling Tower consists of an evaporative cooling tower, two circulation pumps, an expansion tank, an air separator, and instruments for monitoring the closed loop cooling system. The cooling medium is a propylene glycol solution that is circulated between the evaporative cooling tower and the recirculation condenser. A propylene glycol solution is used for freeze protection and corrosion prevention. The

propylene glycol solution receives heat in the recirculation ventilation condenser and rejects heat to the atmosphere in the evaporative cooler. The evaporator is provided with a fan and a spray water system to remove heat from the fluid.

A circulation line transports the propylene glycol solution to and from the recirculation condenser and the evaporative cooling tower. A manually operated globe valve is provided for initial propylene glycol flow adjustment. Instrumentation is provided to monitor the line for flow, pressure, and temperature. The main piping is carbon steel with welded fittings.

2.5.3.3.1 Condenser Pumps. Each evaporator cooling tower has two pumps (one active and one standby) to circulate the propylene glycol solution through the condenser and the evaporator cooling tower. Both pumps are provided with isolation valves. The pumps also are provided with suction and discharge local pressure indicators.

The pumps are provided with current indication and alarms to show whether the pump is running or has failed. Status alarms are used to indicate a disagreement between the hand switch position and the pump operation. To facilitate equal pump wear, indication of total pump operation time is provided.

During a low-flow condition, the operating pump is shut down, a low-flow alarm is activated, and the standby pump becomes the operating pump. If the flow is not reestablished, then the standby pump also is shut down. Both pumps must be reset for the system to operate again. Low flow could be a warning sign of a leak, a clogged line, a low level in the propylene glycol tank, or a malfunctioning pump.

2.5.3.3.2 Expansion Tank. Each propylene glycol expansion tank will provide adequate system pressurization under all operating conditions. The tank provides for system expansion and contraction. A low-level alarm will notify the operator of a pending problem.

2.5.3.3.3 Evaporative Fluid Cooler. The evaporative fluid cooler removes heat from the propylene glycol solution returning from the recirculation condenser. The cooler is equipped with a heat exchanger, cooling fan, spray pump, and water collection pan. A closed-loop sump water recirculation system also is provided for water quality control.

The cooling fan has temperature-controlled dampers to modulate air flow for greater power savings over the operating season. The damper package consists of a single airfoil-type damper blade located in the fan discharge housing. The controls consist of a control transformer, damper motor actuator with linkage, and end switches to cycle fan motors. A proportional-acting temperature controller to control the damper actuators is installed on the outlet line of the evaporative fluid cooler.

The spray pump circulates sump water to spray nozzles, which spray onto a heat exchanger and the water drains back into the sump. The level control automatically provides raw water for sump water makeup. A low water level switch prevents operation of the spray pump. The sump water is provided with a heater controlled by a thermostat with the sensing bulb located in the sump water. The heater protects sump water from freezing.

Sump water quality is maintained by a closed-loop circulation system. Sump water is recirculated by means of a recirculation pump through a strainer and centrifugal separator for particulate removal. Particulates removed by the separator are captured in a bag filter as the separator drain discharges back to the pump suction. Particulate buildup on the filter will initiate an alarm.

Water conductivity is measured by a conductivity probe in the circulation system. A circulation flow is passed over the probe for indication of salts and dissolved solids buildup in the sump water. At a predetermined operator setpoint, high conductivity will actuate the sump water drain valve to drain the sump water to manhole No. 1. Raw water makeup is automatically provided by means of the sump water level controls. A flow switch is provided to prevent operation of the conductivity controls without water flow.

2.5.4 Common Exhaust System

The common exhaust system consists of five basic parts: 1) duct work, 2) a condenser subsystem, 3) a HEME, 4) two filtration trains, and 5) a primary tank ventilation exhaust stack. The common exhaust system provides flammable gas removal and confinement of radiological particulates by maintaining air flow out of the tank and a negative pressure relative to atmospheric pressure in the tank headspace.

The common exhaust flow is taken from the Recirculation Ventilation Cooling Module return line. The flow rate is determined by an automatic control valve that responds to the flow rate setpoint. The exhaust lines from each tank are combined and routed to the ventilation facility. The line then passes through the condenser, where it is cooled, and then through the HEME to eliminate any water droplet carryover into the filter system. The condensate from the condenser and HEME is drained into a seal pot and then passes to catch Tank 241-AZ-151. The condenser and/or the HEME can be valved out and bypassed for maintenance or replacement purposes.

Upon exiting the HEME, the gas stream is heated. Heating the exhaust air extends the service life of the HEPA filters downstream by providing air with reduced humidity relative to the filter unit inlet. The inlet motor-operated valves to both trains are normally open and are closed only during maintenance on the train or when high temperatures are present at the outlet to the filter bank. To smother any possible fires, both the inlet and outlet valves are closed automatically when high temperatures occur at the train outlet.

Upon heater startup, the associated outlet motor-operated valve (MOV) is automatically opened. Under normal operations, only one of the outlet MOVs may be closed at any one time. The outlet MOVs close upon de-energization of the heater, high radiation in the exhaust stack, high differential pressure across the filter train, or high temperature at the outlet to the filter bank. The system can be manually configured by individually setting each MOV.

In a high radiation condition, interlocks from the K1 exhaust duct radiation monitor will open the outlet valve to the standby filter train and close the outlet valve to the operating filter train in the K1 exhaust system. Manual over-ride of this interlock is possible only by changes to the MCS. The MCS uses a password-oriented security system so only authorized personnel can make changes involving over-rides.

Each heater system and associated filter bank are contained in a train. Normally, one train will be in operation while the second train is in standby. Each filter bank consists of two HEPA filters and a HEGA. Instrumentation provided for each filter bank monitors the pressure differential across each stage and the temperature downstream of each bank. The system will shut down and switch over to the standby train upon high differential pressure across any stage of the filter train, upon heater failure, or when the heater high temperature setpoint is tripped.

Once the ventilation gas stream has passed through one of the two filter banks, it is exhausted by the exhaust fan through the monitor system and then through the exhaust stack into the atmosphere. One fan will be in standby while the operating fan maintains a vacuum on the four storage tanks. The second filter bank is provided to allow operation of the ventilation system during routine maintenance activities (e.g., filter replacement). Manually-operated valves are located upstream and downstream of each primary fan. The purpose of these isolation valves is to facilitate maintenance activities. As an additional feature, each fan includes a back draft damper on its discharge. Either fan can exhaust through either ventilation train through the cross-over capability of the system. This provides isolation and maintenance capability for each ventilation train and for each main system fan.

2.5.4.1 Duct Work. The duct work provides gas and moisture confinement for the exhaust stream. It is double-encased piping with carbon steel around stainless steel. The duct work is buried until it enters the Ventilation Building. The buried ducting is cathodically protected with an active system.

2.5.4.2 Ventilation Condenser Cooling System. The closed-loop Ventilation Condenser Cooling System provides cooling for the primary tank ventilation exhaust air from the tanks.

The Ventilation Condenser Cooling System consists of an air-cooled liquid chiller, two circulation pumps, an expansion tank, an air separator, a condenser, and instruments for monitoring the closed-loop cooling system. The cooling medium used is a propylene glycol solution that is circulated between the chiller and the ventilation condenser. Instrumentation monitors the line for flow, inlet temperature, and outlet temperature. The main piping is carbon steel with welded fittings. A manual globe valve in the discharge piping adjusts the flow.

The closed-loop cooling system removes moisture from the gas stream and removes heat from the ventilation condenser. This process reduces the temperature of the vapor. The propylene glycol solution absorbs heat from the condenser and rejects heat in the air-cooled chiller.

2.5.4.2.1 Condenser. The condenser is a shell-and-tube heat exchanger located in the Vent Cell (Figure 2-2) of the Ventilation Building. The ventilation gas stream is cooled by 3800 L (1,000 gal) of 50% propylene glycol, 50% water solution through the tubes. Instrumentation monitors inlet temperature, outlet temperature, and pressure differential across the condenser.

2.5.4.2.2 Pumps. Two pumps (one active and one standby) circulate the propylene glycol solution through the condenser and the chiller cooler. The pumps also have suction and discharge local pressure indicators.

Pump operation is monitored through flow in the recirculation line. If low flow occurs, a flow switch activates the standby pump and an alarm sounds. If the flow is still low after the standby pump is activated, both pumps are shut down until they are reset. The flow switch is also used to send a signal to the chiller indicating that flow has been established.

The pumps are provided with current indication and alarms to show whether the pump is running or has failed. To facilitate equal pump wear, an indication of the pumps' total operating time is measured.

2.5.4.2.3 Chiller. An air-cooled liquid chiller removes heat from the propylene glycol solution as it returns from the ventilation condenser. The chiller is a complete, factory assembled, single-skid package, equipped with compressors, evaporator, condenser, refrigerant circuits, cooler, and controls.

The chiller is equipped with a common trouble alarm to indicate when there is an equipment failure. The chiller is also interlocked with the flow in the propylene glycol line to prevent operation during low flow.

2.5.4.3 High-Efficiency Mist Eliminator. The HEME is a cartridge type and is located in the Ventilation Building Vent Cell (Figure 2-2). The HEME will remove water droplets carried over from the condenser, and drain it into the condensate tank. Instrumentation monitors pressure differential across the HEME. In the case of high differential pressure, the filter can be changed.

All liquid collected in the HEME is drained to a seal pot, and then to catch tank 241-AZ-151.

2.5.4.4 Filtration Trains. The two independent filtration trains consist of a heater, HEPA filters, HEGA unit, and an exhaust fan. One operates as the primary train and the other a standby.

If the outlet valve to an operating filter train is not open, or is subsequently closed, the filter train will shut down and a failure alarm will be activated. Also, automatic switch over to the standby heater and filter train will occur.

2.5.4.4.1 Heaters. Upstream of each HEPA filter train is an electric heater system that heats the saturated air and prevents condensation on the filters. The heater capacity is based on the worst case scenario of loss of cooling and the resulting maximum gas stream conditions.

Each heater is equipped with an internal low flow switch, a high temperature cutout switch, and a manual cutout switch.

Instrumentation monitors temperature upstream of the heater and downstream of the HEPA filter train. Local temperature controllers for each heater are controlled by temperature differential controllers. The differential temperature is measured from the inlet of the heater to the outlet of the HEPA filter train. Low temperature differential will activate separate independent alarms. High temperatures on heater inlet or outlet will also activate alarms. Total airflow is monitored at the exhaust stack.

If the active heater fails, automatic switch over to the standby heater and filter train will occur and a failure alarm will be activated. If the inlet valve to an operating heater is not open or is subsequently closed, the heater will be shut down and a failure alarm will be activated. Switch over to the standby heater and filter train also will occur if the standby system is available.

2.5.4.4.2 High-Efficiency Particulate Air Filters. The filter system is designed for a high particulate removal efficiency. This will be achieved by using two HEPA filters in series. The filters have provisions for in-place efficiency testing. The filter bank can be isolated to facilitate filter change out or other maintenance procedures.

2.5.4.4.3 High-Efficiency Gas Adsorber Filter. The HEGA is a charcoal filter designed to remove organic carbon vapors and iodine gas. The carbon cartridges are located between stages of HEPA filters. The filter bank can be isolated to allow HEGA change out or other maintenance procedures.

2.5.4.4.4 Exhaust Fans. Each exhaust fan is belt driven with a variable speed motor. The maximum flow rate is 28 m^3/min (1,000 scfm), but is normally operated at 11 m^3/min (400 scfm). The fans are centrifugal type with low leakage construction. The fans are sufficient to cover all identified operating modes.

If a failure occurs in the operating exhaust fan, switch over to the standby fan will occur and an alarm will be activated. The fan can be isolated to facilitate change out or other maintenance actions.

2.5.5 Exhaust Stack

The primary tank ventilation exhaust stack is located just outside of the ventilation building, approximately 1 m (3.5 ft) from the external face of the building. The stack extends 16.8 m (55 ft) above grade and is the point of discharge for the primary tank ventilation system. The primary exhaust air stream is sampled and monitored for radioactive particulate before discharge through the stack. The exhausted air stream is also monitored for flow.

2.6 CONFINEMENT SYSTEMS

The 241-AZ-702 ventilation system has been designed to limit the release of radioactive and hazardous materials to the environment. This section provides an overview of confinement features incorporated into the design.

The underground ducting is comprised of individual underground ducts for each tank. Each individual tank is connected to a common header within each Tank Farm.

The 241-AZ-702 underground ducting is double contained from the Tank Farm tie-in to the connection at the ventilation building. Leak detection, for either condensate or pipe leakage is provided at low points between the outer and inner ducting.

2.7 SAFETY SUPPORT SYSTEMS

Safety support systems impacted by the 241-AZ-702 ventilation system consist of effluent monitoring and fire protection. These systems are discussed in the following subsections.

2.7.1 Effluent Monitoring

State-of-the-art instrumentation will monitor and analyze temperature and stack flows of the systems. The instrumentation and electrical systems will read out and/or alarm on the MCS in the control room.

The MCS provides monitoring and control for ventilation system processes and equipment as well as limited monitoring of tank processes in the AWF Tank Farms.

The primary tank ventilation exhaust system discharges the treated gas to the atmosphere. The effluent is monitored and sampled for radioactivity (Bauer 1994a and 1994b) before discharge into the atmosphere. High radioactivity levels will activate control alarms and enable interlocks to secure operation of the primary filter train and transfer to the secondary filter train thus maintaining continuous operation.

The building ventilation system stack is monitored and sampled for radioactivity before discharge of the air. The ventilation building HVAC system discharges the building exhaust air through the ventilation building exhaust stack. Interlocks from the radiation monitoring system cause the switch over to the standby bank on high radiation level. All annunciator response procedures require operator action to determine cause and corrective action.

2.7.2 Fire Protection Systems

The ventilation and generator service buildings are protected throughout by an automatic dry-pipe sprinkler system. The system complies with the requirements of NFPA 13, *Installation of Sprinkler Systems*, for ordinary hazard group occupancy classification (HNF-SD-WM-FHA-020, *Fire Hazards Analysis for Tank Farms*).

System fire alarm and supervisory signals for both buildings will annunciate at the fire alarm control panel located outside the 241-AZ-271 control room on the west wall. The fire alarm system for both buildings complies with the requirements of NFPA 72, *National Fire Alarm Code*. All alarm system components in both buildings are Underwriters Laboratories (UL) listed or Factory Mutual approved for the use intended. A radio fire alarm master box is located inside the 241-AZ-271 control room on the west wall. This master box transmits fire alarm and trouble signals to the Hanford Fire Department.

The control building is protected throughout by a wet pipe sprinkler system.

All sprinkler system components in both buildings are UL listed or Factory Mutual approved for the use intended.

2.8 UTILITY DISTRIBUTION SYSTEMS

Utility distribution systems impacted by the 241-AZ-702 ventilation system include the following:

- Water supply systems
- Electrical power distribution system.

Each system is discussed below.

2.8.1 Water Supply Systems

All water for the 200 East Area is supplied from the Hanford Site Export Water System (EWS). Water is distributed throughout the area by two separate systems, the Raw Water System (RWS) and the Sanitary Water System (SWS). Untreated, and unchlorinated raw water is used principally for cooling, and dilution systems. Sanitary water is treated (e.g., filtered, purified) water used for drinking and sanitary facilities. These provide water for sanitary, process, and fire protection uses.

The RWS supplies makeup water to the recirculation condenser cooling system and the evaporative coolers through the diesel generator building. The RWS consists of the duplex strainer, a pressure-reducing valve, a certified backflow preventer, and associated instrumentation.

The RWS routes raw water from a 30.5-cm (12-in.) polyvinyl chloride underground header into the diesel generator building through a 5.1-cm (2-in.) carbon steel line. The raw water enters the building through a duplex strainer and backflow preventer.

Instrumentation is provided to monitor differential pressure across the strainer and activate an alarm on high differential pressure. Upon detection of high differential pressure, maintenance personnel must manually switch to the standby filter. Local pressure gauges are provided upstream of the strainer and downstream of the backflow preventer. In addition, instrumentation is provided to monitor header flow rate, totalization, and pressure downstream of the backflow preventer. Upon detection of low pressure, an alarm is sent to the MCS, however, no automatic control is provided.

2.8.2 Electric Power Systems

Power is provided to the new facilities from an existing 13.8 kV aerial line to a newly-installed unit substation. In this substation, voltage is reduced by a 300 kVA transformer to 480/277 V ac for distribution to system loads. Standby power is available to the main ventilation train and the MCS.

Standby power is provided by a 325 KVA diesel generator through two automatic transfer switches to the service distribution switchboards, motor control centers (MCCs), transformers, and lighting and power panels. The automatic transfer switch will actuate and standby power will be supplied to the bus located in the MCC and bus located in the ventilation building. All non-motor loads such as lighting will be immediately energized. Critical motor loads will be automatically started in sequence to reduce the initial load on the generator. Non-critical loads will remain secured until manually started after return of normal power.

The diesel fuel storage tank is sized to provide at least 24 hours of fully loaded engine operation. The 241-AZ-702 ventilation system diesel generator is equipped with a 3 Kw jacket water heater that maintains the jacket water temperature above 32 °C (90 °F). The jacket water is not circulated unless the engine is running. The diesel generator building is cooled or heated to the approximate temperature range of 4 to 32 °C (40 to 90 °F).

An uninterruptible power supply is provided to maintain a continuous supply of power to the MCS during the transition from normal to standby power. The uninterruptible power supply is continuously on-line and will supply standby power on a loss of normal power.

2.9 AUXILIARY SYSTEMS AND SUPPORT FACILITIES

No systems or facilities other than those described in the previous sections were identified as requiring descriptions in this document.

This page intentionally left blank.

Figure 2-1. 241-AZ-702 Ventilation System Building and Equipment Additions.

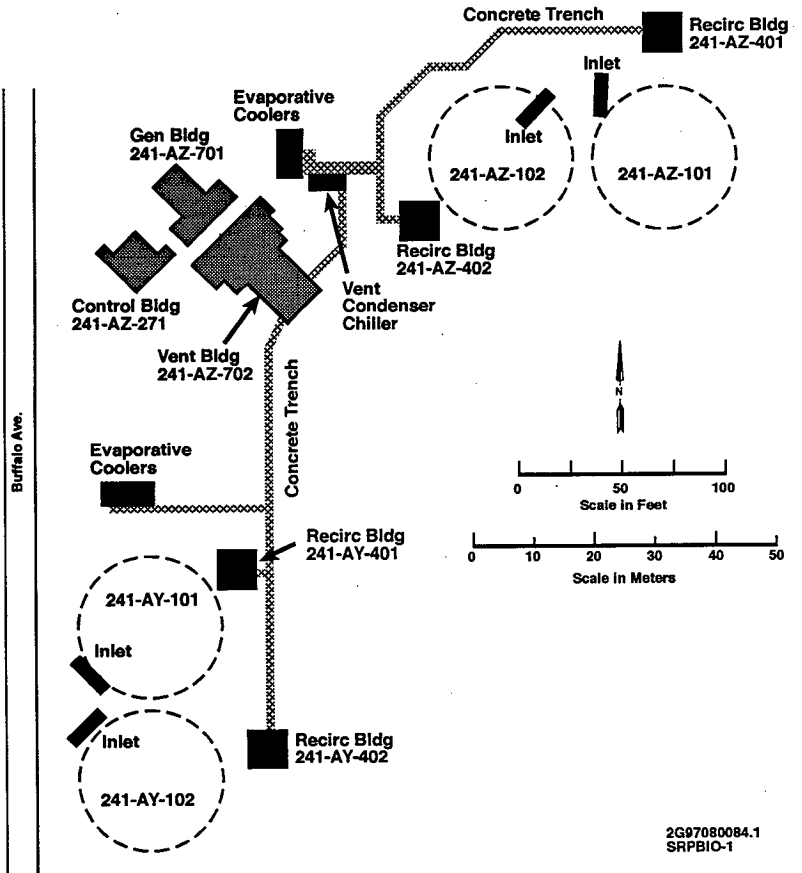

Figure 2-2. Building 241-AZ-702 First Floor Plan.

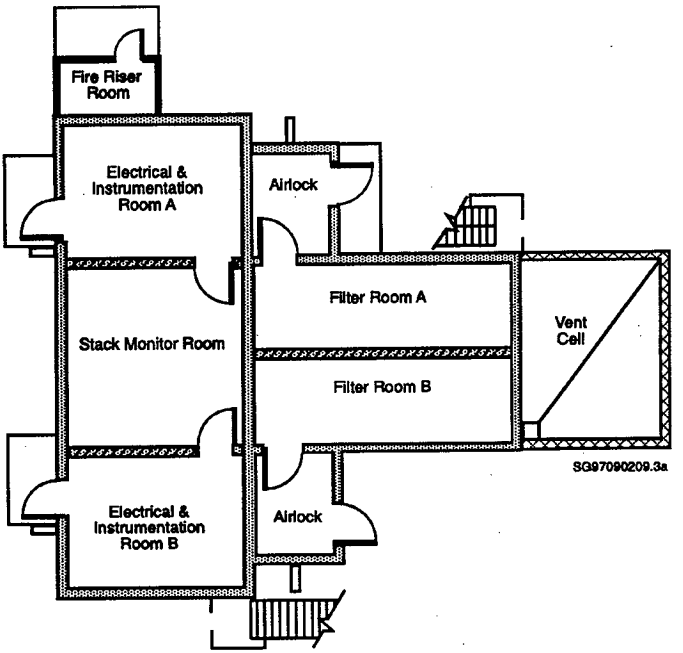

Figure 2-3. Building 241-AZ-702 Second Floor and Roof Plan.

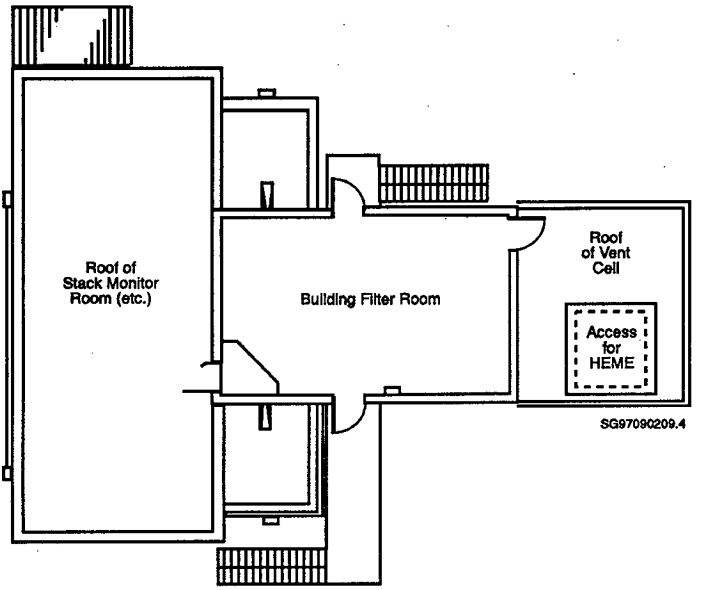

Figure 2-4. Generator/Service Building Floor Plan, 701-AZ.

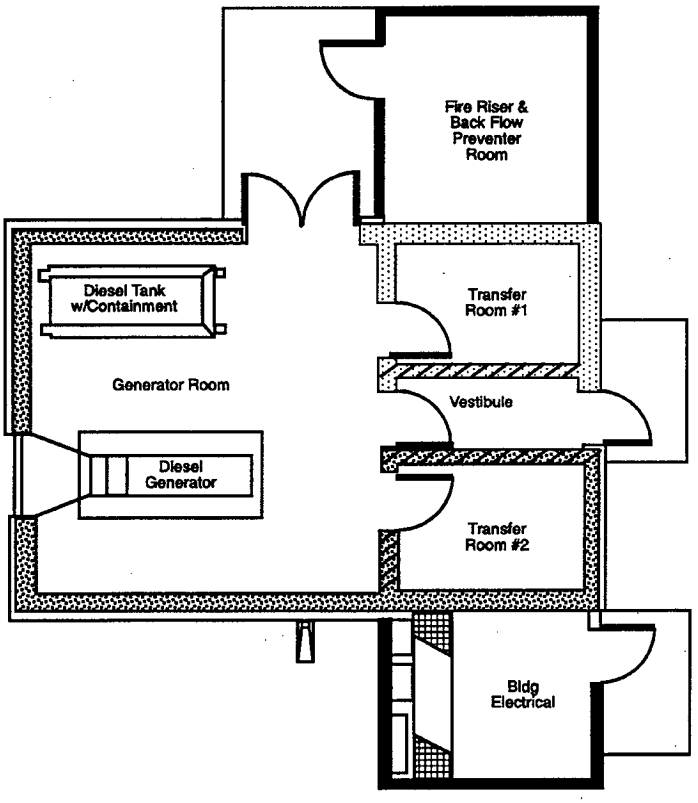

Figure 2-5. Control Building, 241-AZ-271 Plan View.

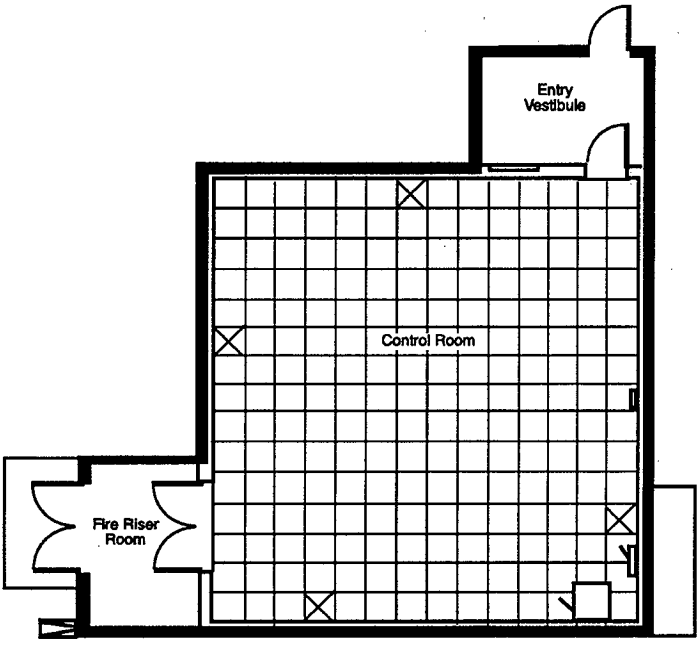

Figure 2-6. Project W-030 Ventilation Upgrade System.

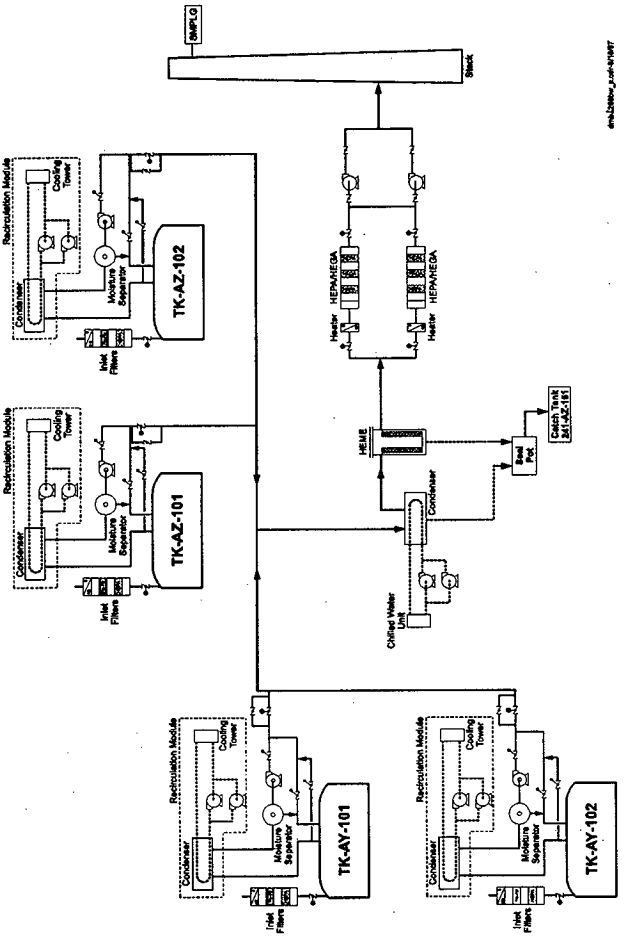

Figure 2-7. Recirculation Flow.

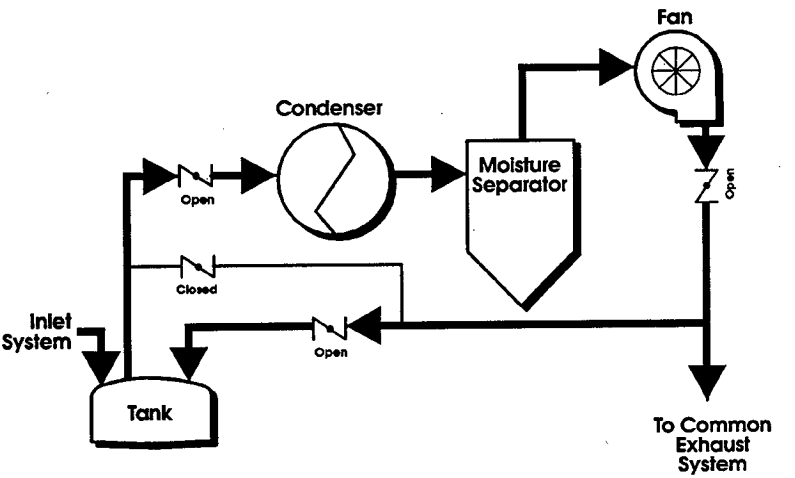

Figure 2-8. Bypass Flow.

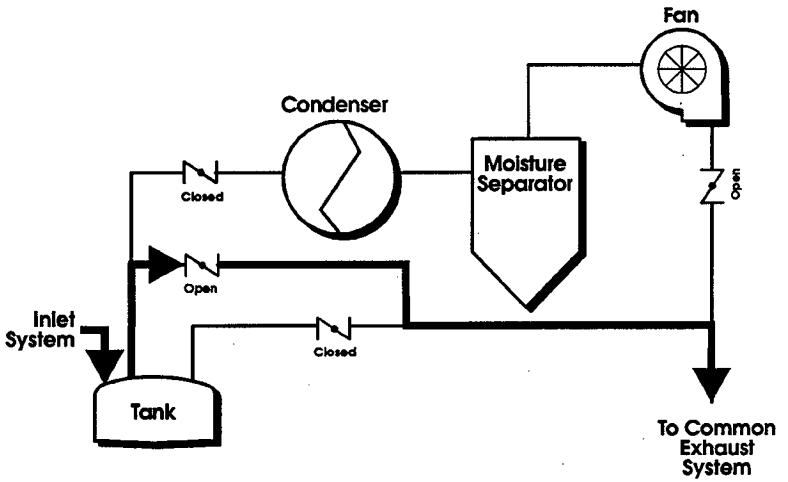

Figure 2-9. High Heat Flow.

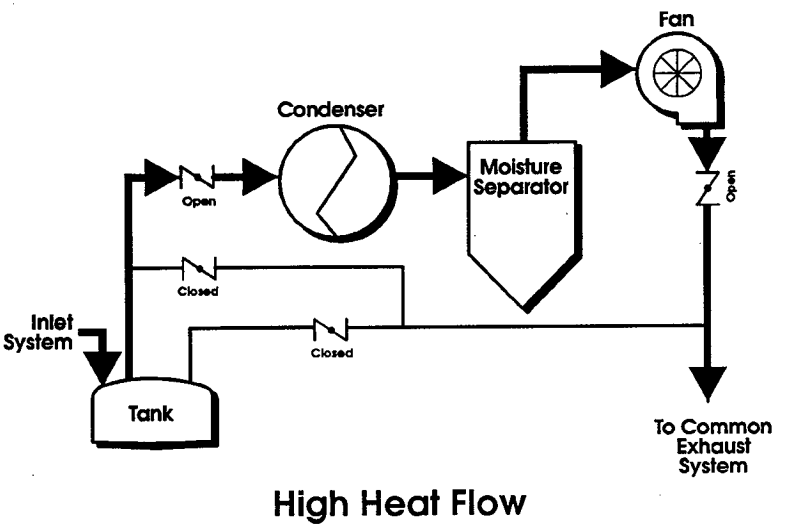

This page intentionally left blank.

Table 2-1. 241-AZ-702 Ventilation System Design Heat Loads and Tank Waste Temperatures.

Tank	AZ-101	AZ-102	AY-101	AY-102
Current heat load,[a] kW (Btu/h)	70.81 (241,600)	56.74 (193,600)	12.02 (41,000)	9.67 (33,000)
Design heat load removal with recirculation,[b] kW (Btu/h)	486.79 (1,661,000)	293.07 (1,000,000)	293.07 (1,000,000)	293.07 (1,000,000)
Ventilation flow rate allocated in the by-pass mode[a,c] m^3/min (cfm)	9.9 (350)	9.9 (350)	4.2 (150)	4.2 (150)
Supernate temperature with current tank contents and by-pass mode,[a] °C (°F)	65.6 (150)	61.1 (142)	41.7 (107)	38.9 (102)
Peak sludge temperature with current tank contents and by-pass mode,[a] °C (°F)	93.3 (200)	94.4 (202)	58.9 (138)	43.9 (111)

[a]HNF-SD-W030-ER-004, 1997, Evaluation of Waste Temperatures in Aging Waste Facility Tanks for By-Pass Mode Operation of the 702-AZ Ventilation System (Project W-030), Rev. 0, Numatec Hanford Corporation, Richland, Washington.

[b]WHC-SD-600-FDC-001, 1997, Functional Design Criteria for the Tank Farm Ventilation Upgrade, Project W-030, Rev. 4, Numatec Hanford Company, Richland, Washington.

[c]The by-pass mode is the lowest heat removal configuration. It involves no heat removal by the recirculation/cooling system (which is by-passed). The heat is only removed by the once-through air flow.

Table 2-2. Detailed Description of 241-AZ-702 Ventilation System TMACs Instrumentation Connections.

Tag Description	Detailed Description
AY FARM PRIM TK VENT LINES LEAK DETECTED	Leak detected in piping encasement associated with the 241-AY primary tank ventilation.
AY FARM RECIRC BLDGS LEAK DETECTED	Liquid detected on the floor of either the 241-AY-401 or 241-AY-402 buildings. Liquid likely condensate leaking from condenser, moisture separator, fan, or piping.
TK-AY-101 PRESS HI/LO	241-AY-101 tank pressure (head space) is outside its normal operating range.
TK-AY-102 PRESS HI/LO	241-AY-102 tank pressure (head space) is outside its normal operating range.
AZ FARM PRIM TK VENT LINES LEAK DETECTED	Leak detected in piping encasement associated with the 241-AZ primary tank ventilation.
AY FARM RECIRC BLDGS LEAK DETECTED	Liquid detected on the floor of either the 241-AZ-401 or 241-AZ-402 buildings. Liquid likely condensate leaking from condenser, moisture separator, fan, or piping.
TK-AZ-101 PRESS HI/LO	241-AZ-101 tank pressure (head space) is outside its normal operating range.
TK-AZ-102 PRESS HI/LO	241-AZ-102 tank pressure (head space) is outside its normal operating range.
CATCH TK 241-AZ-151 LEAK DETECTED	Liquid detected in either the piping encasement for the 241-AZ-702 condensate discharge line (piping to 241-AZ-151 from 241-AZ-702), or liquid detected in the piping encasement associated with the 241-AZ-151 catch tank ventilation line.
PRIMARY TK VENT STACK DISCHARGE RAD HI/FAIL	Either high levels of radiation have been detected by the 241-AZ-702 primary tank ventilation stack's beta/gamma CAM, or the CAM has failed.
PRIMARY TK VENT SAMPLE SYSTEMS FLOW HI/LO	The sample flow rate is too high or too low through the beta/gamma CAM, or the record sampler (which are associated with the 241-AZ-702 primary tank ventilation stack).
AZ702 BLDG VENT STACK DISCHARGE RAD HI/FAIL	Either high levels of radiation have been detected in the 241-AZ-702 building ventilation stack beta/gamma CAM, or CAM has failed.
AZ702 BLDG VENT SAMPLE SYSTEMS FLOW HI/LO	The sample flow rate is too high or too low through the beta/gamma CAM, or through the record sampler (which are associated with the 241-AZ-702 building ventilation stack).
AZ702 BLDG LEAK DETECTED	Liquid has been detected in the 241-AZ-702 cell's sump, or on the floor of Filter Room A, or on the floor of Filter Room B.

CAM = continuous air monitor.

3.0 HAZARD AND ACCIDENT ANALYSES

3.1 INTRODUCTION

The 241-AZ-702 ventilation system is designed to replace the existing 241-A-702 ventilation system for the Aging Waste Facility (AWF) waste storage tanks. These tanks contain radioactive materials in the form of liquid and sludges. The radionuclides, their concentrations, and the resulting unit liter doses (ULDs) used for radiological consequence calculations are found in WHC-SD-WM-SARR-037, *Development of Radiological Concentrations and Unit Liter Doses for TWRS FSAR Radiological Consequence Calculations*.

This section identifies and evaluates hazards associated with the operation of the 241-AZ-702 ventilation system. It evaluates the consequences of accidents from potential internal, external, and natural phenomena-related events that could potentially release hazardous materials. Potential consequences to the public and to workers are considered, as are the corresponding preventive and mitigative features.

The following safety analysis is based on a Preliminary Hazard Analysis (PHA) technique that qualitatively or semi-quantitatively evaluated the identified hazards. From this evaluation, design basis accidents are identified (Section 3.3, "Hazard Analysis Results") and analyzed. In addition, the 241-AZ-702 ventilation system is compared with the *Tank Waste Remediation System Basis for Interim Operation*, HNF-SD-WM-BIO-001, (BIO), accident scenarios (Section 3.4.2, "Design Basis Accidents" of this addendum). All the accident scenarios for further analysis are also contained in BIO, Section 5.3.2, "Accident Analysis Scenarios."

This addendum to the BIO and associated Technical Safety Requirements (TSRs), will be the basis for future Unreviewed Safety Question (USQ) (DOE 5480.21, *Unreviewed Safety Questions*) evaluations related to the ventilation system for the AWF.

3.2 REQUIREMENTS

The design codes, standards, regulations, and DOE Orders that are required for establishing the safety basis of the 241-AZ-702 ventilation system are as listed in the BIO. Only portions of these documents are relevant to this safety document, namely those that cover requirements pertinent to safety analysis.

3.3 HAZARD ANALYSIS RESULTS

Results of the hazard identification activities for the 241-AZ-702 ventilation system are provided in the following sections. Details of the hazard analysis are presented in the following appendices to this addendum.

- Appendix A, "Hazard Basis"
- Appendix B, "Hazard Analysis Summary"

- Appendix C, "Hazard Evaluation Result"
- Appendix D, "Control Allocation Tables."

The results of the hazard analysis were used to select candidate accidents for analysis and identify controls. The detailed methodology and results of the hazard analysis are recorded in Appendix B, "Hazard Analysis Summary," of this addendum.

Section 3.3.1 below discusses the methodology used for the hazard analysis summarized in the appendices. Section 3.3.2 below provides a summary of the hazard analysis results.

3.3.1 Methodology

The first step in performing an accident analysis is to identify and qualitatively assess the facility hazards. The results of the assessment are then used to determine the events that could initiate accidents with the potential to expose site personnel or the general public to radioactive or chemical materials. See Appendix B of this addendum for a more thorough description of methodology.

3.3.1.1 Hazard Identification. Hazard means a source of danger (i.e., material, energy source, or operation) with the potential to cause illness, injury, or death to personnel or damage to a facility or to the environment (without regards for the likelihood or credibility of accident scenarios or consequence mitigation). As in the BIO, the hazard identification methods and techniques include the following:

- Review of past safety documents
- Review of reportable event history (e.g., Hanford Site and Tank Waste Remediation System [TWRS] unusual occurrence reports)
- Review of historical records of similar operations (e.g., unusual occurrence reports from the existing 241-A-702 ventilation system, the SY farm ventilation system, the AN farm ventilation system, and the SX farm ventilation system)
- Participation by current and former operations and engineering personnel in the hazard analysis effort
- Use of standardized checklists of potential hazardous materials and energy sources
- Use of material at risk information
- Use of facilities and operations descriptions
- Use of existing TWRS hazard analyses.

3.3.1.2 Hazard Evaluation. The hazards analysis consists of the hazards identification and evaluation process performed for the AWF Tank Farms and includes the comprehensive evaluation of potential process-related hazards,

natural phenomena hazards, external hazards, and hazards intrinsic to the facility. These hazards arise from the type, form, location, and quantities of nuclear chemical waste stored in the aging waste underground storage tanks. The hazard identification and evaluation process provides a qualitative evaluation of the spectrum of potential accidents involving the hazards identified. This effort forms the basis for: 1) identifying any additional, unique facility worker protection issues and environmental considerations, and 2) selecting potential design basis accidents (DBAs) to be further developed and quantified in Section 3.4.2 below.

Those hazards identified as credible by the review team were recorded in the Hazard Summary Table Appendix B, Table B-1. Categories of hazardous materials evaluated included radioactive material, toxic materials, corrosive materials, reactive materials, asphyxiants, explosives, and combustibles and flammables. Types of energy sources evaluated included potential energy sources, kinetic energy sources, and radiant energy sources.

3.3.2 Hazard Analysis Results

Using the PHA and hazard and operability study (HazOp) techniques, a Hazard Analysis Summary table was constructed. Hazard Analysis Summary tables have been used to compile the results of the hazard identification and evaluation process for the 241-AZ-702 ventilation system. The tables are presented in Appendix B along with the supplemental information that was considered for each hazard category during the identification process.

3.3.2.1 Hazard Identification. The hazards identified for the 241-AZ-702 ventilation system are listed in Appendix B, Table B-1.

Review of past safety documents (e.g., unusual occurrence reports) indicates that no major accidents or hazardous situations that are ventilation related were identified for the AWF since 1985. No data was available before 1985. The hazards associated with the AWF waste storage tanks have been summarized in Tables 3-1 through 3-6.

3.3.2.2 Hazard Classification. The AWF Tank Farms have been identified in the BIO as Hazard Category 2 (BIO, Section 5.1, "Hazard Classification").

3.3.2.3 Accident Evaluation. In the PHA and HazOp study, estimates were made of the likelihood of each scenario (or class of accidents) to determine the frequency category of the scenario. There are four frequency categories. There are also four severity categories as previously defined. These values are used to establish a risk matrix bin number. Those events in bin numbers 1, 2, 3, 4, 5, and 7 are considered for accident selection (Table B-5).

The accidents having a potential severity category of S2 and S3 were grouped according to the accident scenarios (see Appendix B, Table B-4) for a definition of severity categories). This second grouping allows for the selection of a representative scenario to be developed in Section 3.4 below that will bound the other accidents within the group (Section 3.3.4.2).

3.3.2.3.1 Accidents Identified with the Monitor and Control System. The monitor and control system (MCS) was reviewed for hazards and accident initiators related to the 241-AZ-702 ventilation system. Hazards and accident initiators associated with the loss or malfunction of the MCS were identified as a loss of ventilation airflow, ventilation imbalance, excessive vacuum, excessive pressure, and excessive airflow. The associated accidents that would result from these have been included in (Table B-1, Event Numbers 28, 35, 36, and 39.

3.3.2.3.2 Accidents Identified with Instrumentation. The instrumentation was reviewed for its potential impact on the 241-AZ-702 ventilation system. The monitoring and alarm systems provide indications that the pressure, flow, radiation levels, etc., exceed trip limits. Lack of these indications, unless later identified as performing a safety function, was not identified as initiating any accident.

Reaching certain instrumentation trip limits results in ventilation configuration changes. An example of this would be exceeding the trip limit associated with differential pressure across the high-efficiency particulate air (HEPA) filters, resulting in an automatic change of the filter trains. Premature changes in configuration, failure to make the configuration changes, or slow changes in the configuration did not result in any identified hazards for the 241-AZ-702 ventilation system.

The instruments and equipment in regions of potential flammable gas concentrations meet the ignition source controls as defined in the BIO, Appendix E, "Flammable Gas/Slurry Growth Unreviewed Safety Question: Justification for Continued Operation for the Tank Farms at the Hanford Site."

3.3.2.3.3 Accidents Identified with Loss of Utilities. Accident initiators associated with the loss of utilities were evaluated. The only accident initiator from the loss of utilities that could seriously impact the 241-AZ-702 ventilation system was the loss of electrical power. This was evaluated and recorded in Table B-1, Event Number 28. Loss of water or instrument air (there are no natural gas or steam lines associated with the 241-AZ-702 ventilation system) did not result in any identified hazards.

3.3.2.3.4 Accidents Identified with Nuclear Criticality. A nuclear criticality accident within the AWF ventilation system was deemed to be beyond extremely unlikely (BEU) by the HazOp team (Appendix B, Table B-1, Event Number 43). Section 6.3, "Project Implementation" of this addendum provides additional information and detail to confirm the team's assessment for a criticality accident in the AWF ventilation system.

3.3.2.4 Accident Selection. Accident selection for hazards associated with the 241-AZ-702 ventilation system was performed by the hazards analysis team, as part of the hazards analysis process.

The hazards analysis team consisted of the 241-AZ-702 ventilation system designers, TWRS Tank Farm plant operators, and safety analysts. The hazards analysis team met and performed a PHA, HazOp, and hazard identification on the 241-AZ-702 ventilation system. Each component of the system was considered

for failure including the MOVs (PHA) and flow from each component (HazOp). The PHA emphasized the components of the design. The HazOp emphasized the processes involved with ventilation. Also, a checklist for all high energy sources in the system was performed (Table B-6). This was the method used to capture all the potential hazards and accidents associated with the system.

The hazards analysis scope included all aspects of the 241-AZ-702 ventilation system including the recirculation systems of the four tanks (241-AZ-101,-AZ-102, 241-AY-101,-AY-102), the chiller, chiller pumps, condenser, seal pot, 241-AZ-151 catch tank, HEME, both trains of electric heaters, HEPA, HEGA, fans, monitoring instrumentation, the buildings, the secondary HVAC in the ventilation building, the ducts, the hangers, and 55-ft exhaust stack.

Appendix B, Table B-1, provides summary results for the 241-AZ-702 ventilation system PHA and HazOp. Identified hazards were related to corresponding postulated accident scenarios. Each of the postulated accident scenarios were further evaluated by the hazards analysis team.

The results of the PHA analyses were a number of postulated abnormal events which were ranked by the team members with respect to safety consequences. The initial, qualitative, consensus estimates of the severity of the consequences were ranked according to the criteria shown in Appendix B, Table B-4, "Radiological and Chemical Consequence Evaluation Levels for Hazard Receptors."

The initial, qualitative, consensus estimates of the frequency of the abnormal events were also ranked by the hazards analysis team members. An alphanumeric system was used to designate the frequency as shown in Appendix B, Table B-3, "Frequency Evaluation Levels."

In the process of completing the PHA, risk matrix numbers were added to each column considering events both with and without mitigation. Table B-5, was used to help identify event scenarios that required further attention. The risk matrix numbers 1, 2, 3, 4, 5, and 7 indicated that accident analyses would be required to envelope postulated event consequences. These risk matrix numbers also indicated the need for consideration of safety structures, systems, and components, and interim operational safety requirements. Risk bin numbers 6, 8, and 9 indicated the need for consideration of administrative or operating specification level controls.

Those events which resulted in risk binning matrix numbers which indicated the need for further accident analyses included the following:

- Process vapor release to the atmosphere due to ducting failure, drain line failure, seal pot failure, etc. (facility worker only)
- Release of radiological and toxicological material due to Tank Bump
- Release of radiological and toxicological material due to dome collapse caused by flammable gas headspace deflagration
- Release of radiological and toxicological material due to dome collapse caused by excessive vacuum

- Release of radiological and toxicological material due to dome collapse caused by excessive pressure
- Criticality caused by buildup of radiological material in the ducting.

Safety analysts then further considered the above identified events. The criticality event was determined to be beyond extremely unlikely after consideration of the plutonium chemistry of high level neutralized wastes in the Hanford Site underground storage tanks. It was determined that the plutonium would not be subject to transport and accumulation in the tank ventilation systems (Section 6.0). The criticality event was thus eliminated from further consideration.

The remaining events were then reviewed to determine appropriate bounding, unique, and representative accident scenarios. The safety analysts determined that the following accidents are specific to the 241-AZ-702 ventilation system and were the appropriate bounding, unique, and representative accidents for analysis.

- HEPA filter failure - exposure to high temperature (filter fire)
- HEPA filter failure - exposure to high pressure
- Tank dome collapse (regarding ventilation)
- Flammable Gas Deflagration event
- Tank Bump.

3.4 ACCIDENT ANALYSIS

This section provides the analysis for the five accidents (HEPA filter failure - exposure to high temperature [filter fire], HEPA filter failure - exposure to high pressure, tank dome collapse, Flammable Gas Deflagration event, Tank Bump) that need to be revisited for the 241-AZ-702 ventilation system. To provide a complete picture of how the 241-AZ-702 ventilation system relates to the BIO accident scenarios, all other BIO accident scenarios are discussed with a focus on any interfaces with the 241-AZ-702 ventilation system (Table 3-7).

In accordance with DOE-STD-3009-94, each BIO accident used in the safety analysis was quantitatively evaluated and found to be applicable.

The five reanalyzed accidents are presented in the same order as that of the BIO. Note that only the new controls are shown in this addendum. The existing controls that remain applicable are provided by reference to the BIO.

It is important to note that the analysis addressing State Highway 240 transient populations that is outlined at the beginning of BIO Section 5.3.2, "Accident Analysis Scenarios," is also applicable to the 241-AZ-702 ventilation system analysis.

Section 3.4.1 below summarizes the important aspects of the consequence calculation methods common to the accidents analyzed.

3.4.1 Methodology

3.4.1.1 Radiological Dose and Toxicological Exposure Methodology. Five accidents previously analyzed in the BIO (HEPA filter failure - exposure to high temperature, HEPA filter failure - exposure to high pressure, tank dome collapse, Flammable Gas Deflagration, Tank Bump) were identified for analysis with respect to the 241-AZ-702 ventilation system. These accidents are addressed in this chapter. The methodology associated specifically with radiological dose and toxicological exposure is as detailed in WHC-SD-WM-SARR-037, WHC-SD-WM-SARR-011, *Toxic Chemical Considerations for Tank Farm Releases*, and WHC-SD-WM-SARR-016, *Tank Waste Compositions and Atmosphere Dispersion Coefficients for Use in Safety Analysis Consequence Assessments*, which comprise the same basis for the source terms used in the BIO. This section summarizes the radiological and toxicological consequence calculation values necessary and particular to the 241-AZ-702 ventilation system analyses of operational accidents, natural phenomena, and external events selected for further analysis in Section 3.3.2.4, "Accident Selection." Consequence calculation methods specific to individual accidents are summarized in the individual analyses presented in Section 3.4.2 below.

Accident consequences are combined with the accident frequency and compared to the risk guidelines as shown in Tables 3-8 and 3-9. Radiological risk guidelines for the 241-AZ-702 ventilation system, (Project W-030) are from Revision 1 of Section 7.0, "Risk," of WHC-CM-4-46[2].

Toxicological consequence calculation methodology is as shown in WHC-SD-WM-SARR-011. Toxicological risk guidelines are shown in Table 3-9. Application of these guidelines using the sum-of-fractions methodology means that all consequences with the sum-of-fraction values less than one (1) are within the risk guidelines.

3.4.1.2 Natural Phenomena Methodology. The process to analyze natural phenomena effects on facilities is twofold. First the facilities are analyzed for their failure with respect to natural phenomena and the associated consequences. Then the design is modified to preclude that failure, if necessary and possible, by designing the system to meet specified criteria as found in DOE 6430.1A and SDC 4.1 for each natural phenomenon (e.g., design basis earthquakes, wind loads, etc.).

---

[2]Refer to Appendix F, "Site-wide Controlled Manual Cross Reference Table," of the BIO for cross-walk between Site-wide controlled manuals (e.g., WHC-CM-X-XX) superseded by Fluor Daniel Hanford, Inc., Procedures (e.g., HNF-PRO-XXX).

3.4.2 Design Basis Accidents

The following accidents are specific to the 241-AZ-702 ventilation system and bound all other accidents resulting from hazards shown in the Hazards Analysis Summary Table B-1: HEPA filter failure - exposure to high pressure, HEPA filter failure - exposure to high temperature, tank dome collapse, Flammable Gas Deflagration, and Tank Bump. This section evaluates each of these accident scenarios and dispositions the balance of the BIO accidents with respect to the 241-AZ-702 ventilation system.

3.4.2.1 Nuclear Criticality. The BIO evaluated the potential for nuclear criticality and concluded that no credible scenario has been identified that leads to a criticality in a double-contained receiver tank (DCRT), double-shell tank(DST), or single-shell tank (SST), according to the existing inventory of plutonium that is in the Tank Farms.

Build-up of plutonium in the 241-AZ-702 ventilation system ductwork was considered but deemed BEU due to the low concentrations involved. See Section 6.3 of this addendum for a more detailed discussion.

3.4.2.1.1 Controls. No additional controls are needed. The other criticality controls listed in the BIO are still applicable.

3.4.2.2 High-Efficiency Particulate Air Filter Failure - Exposure to High Temperature or Pressure. Potential releases from HEPA filter failure - exposure to high temperature are evaluated in the BIO. The heat from a fire in close proximity to a ventilation system degrades the HEPA filter and causes a release of a portion of the waste that has accumulated on the filter. In addition, the failed filter is assumed to provide an unfiltered release pathway that continues to operate for up to one year. Bounding radiological and toxicological consequence calculations for the 241-AZ-702 ventilation system are provided in Addendum 1, "Tank 241-C-106 Sluicing Safety Analysis," Section 3.4.2.2.

A pressure differential of 2.5 kPa can fail HEPA filters. The high pressure events identified in the BIO are applicable to the 241-AZ-702 ventilation system. These scenarios are discussed in Section 3.4.2.2.2.

The 241-AZ-702 ventilation system (or the 241-A-702 if it is returned to service) is used to support operation of the Waste Retrieval Sluicing System that is discussed in Addendum 1. The normal storage operation accident (i.e., no sluicing) discussed here and in Section 5.3.2.2 of the BIO text, is bounded by the consequences shown in Addendum 1. Unlike sluicing, normal storage and transfer operations do not have the potential to greatly agitate the waste (both liquids and solids) and create an increased aerosol concentration in the headspace of Tank 241-AY-102. Addendum 1, Section 3.4.2.2, provides additional discussion regarding the accident and how it is impacted by sluicing activities.

3.4.2.2.1 High-Efficiency Particulate Air Filter Failure - Exposure to High Temperature Accident Scenario Assuming No Controls. The BIO indicates that high temperatures associated with an external fire (occurring in close proximity to a HEPA filter system) or the failure of an in-line heater could degrade the ventilation system filters. If the integrity of the filters was

compromised, the inventory of the filters could be released, followed by an unfiltered release from the tank vapor space. Releases from the unfiltered pathway are assumed to continue for up to one year in the BIO analysis. This one year unfiltered release is also assumed in the 241-AZ-702 ventilation system analysis. The radiological and toxicological consequences for this accident are bounded by those presented in Addendum 1, Section 3.4.2.2.

The estimated frequency for this accident scenario was determined to be anticipated (Table B-1, Event Number 40). The frequency of "anticipated" is based on the configuration of the ventilation system and the use of electric heaters.

Each of the two filter trains, containing two HEPAs and a HEGA filter, are housed separately, each train with its own heater. Only one train is used at a time, therefore only one is considered to be lost to fire. The HEME and the inlet HEPA are remotely located in the ventilation system and are not assumed to catch fire in this scenario.

3.4.2.2.1.1 Radiological Consequences. See Addendum 1, Section 3.4.2.2 for the radiological consequences of this accident.

3.4.2.2.1.2 Toxicological Consequences. See Addendum 1, Section 3.4.2.2 for the toxicological consequences of this accident.

3.4.2.2.1.3 HEPA Filter Failure - Exposure to High Temperature Accident Summary of Safety Class/Safety Significant SSCs and Technical Safety Requirements (TSRs). See Addendum 1, Section 3.4.2.2 for the safety SSCs and TSR controls that have been developed to address the risk associated with this accident.

3.4.2.2.2 High-Efficiency Particulate Air Filter Failure - Exposure to High Pressure. Accident Scenario Assuming No Controls - As described in the BIO, a pressure differential of 2.5 kPa (0.36 psi) can cause HEPA filter failure. The accidents identified in the BIO for the AWF tanks that could raise the tank pressure above 2.5 kPa (0.36 psi) include steam intrusions, Flammable Gas Deflagrations, organic solvent fire, and in-tank fuel fire/deflagrations. The 241-AZ-702 ventilation system hazard analysis (Appendix B) also identified excessive particulate loading in the filters and moisture on the filters as other potential initiators to the high pressure accident. The bounding analyses are presented in Addendum 1, Section 3.4.2.2. Unlike the HEPA filter failure from exposure to high temperature (discussed in Section 3.4.2.2.1), which assumed an unfiltered release for up to one year, the HEPA filter failure from high pressure involves high energy events which are not assumed to remain undetected. Therefore, a one year unfiltered release is not considered.

Radiological Consequences. The BIO has evaluated the accidents that could cause a HEPA filter failure because of high pressure (i.e., steam intrusions, Flammable Gas Deflagrations, organic solvent fire, and in-tank fuel fire/deflagrations) in the AWF tanks (with the 241-A-702 ventilation system). In addition, the HazOp in Appendix B considered excessive filter moisture and high particulate loading. The results presented in Addendum 1, Section 3.4.2.2 are bounding for the 241-AZ-702 ventilation system.

High-Efficiency Particulate Air Filter Failure - Exposure to High Pressure Accident Comparison to Guidelines. The accident consequences for the 241-AZ-702 ventilation system are presented in Addendum 1, Section 3.4.2.2.

High-Efficiency Particulate Air Filter Failure - Exposure to High Pressure Accident Controls. See Addendum 1, Section 3.4.2.2 for the safety SSCs and TSR controls that have been developed to address the risk associated with this accident.

The only accident associated with HEPA filter failure due to high pressure which requires the imposition of other ventilation controls (beyond the HEPA filter control program) is the Flammable Gas Deflagration accident. The controls required for this accident are discussed in more detail in Section 3.4.2.14.

3.4.2.2.3 High-Efficiency Particulate Air Filter Failure - Controls. See Addendum 1, Section 3.4.2.2 for the safety SSCs and TSR controls that have been developed to address the risk associated with this accident.

3.4.2.3 Fire In Contaminated Area. There are no contaminated areas associated with the 241-AZ-702 ventilation system that are routinely accessed, such as valve pits, pump pits, and diversion boxes. In the scenario analyzed in the BIO, fuel from a crane gas tank is spilled into a contaminated (and open) valve pit, where it catches fire. The analysis without controls showed that controls are required to protect the onsite worker. To protect the onsite worker, an ignition control program has been established. The elements of this program are shown in BIO, Table 5.3.2.3-2, "Technical Safety Requirement Controls for Fire in Contaminated Area." These controls are not directly applicable to the 241-AZ-702 ventilation system; however, they are applicable to the AWF in general.

3.4.2.4 Evaporator Dump. This accident involves a loss of electrical power to the evaporator, which results in a discharge of the contents of the evaporator to a DST. This scenario is not applicable to the AWF and therefore to the 241-AZ-702 ventilation system. Therefore, no additional controls, beyond those listed in the BIO, are required.

3.4.2.5 Steam Intrusion from Interfacing Systems. This accident involves steam jets that are used to transfer waste into the Tank Farms. As a result of operator error, steam is routed to the headspace of a waste tank, which results in a pressure increase and HEPA filter failure. This scenario applies to the 241-AZ-702 ventilation system and is addressed in Section 3.4.2.2.2 of this document. The controls as listed in Addendum 1, Section 3.4.2.2.3 apply.

3.4.2.6 Leak from Railcar/Tank Trailer. This scenario evaluates the effects of a railcar breach, as the railcar is about to enter the 204-AR Waste Unloading Facility. This scenario is not applicable to the 241-AZ-702 ventilation system. Therefore, no additional controls, beyond those listed in the BIO, are required.

3.4.2.7 Subsurface Leak Remaining Subsurface. Subsurface leaks that remain subsurface have been analyzed in the BIO for existing transfer routes. A leak from a single-walled direct-buried pipe was selected as the bounding accident in the BIO. This scenario was considered bounding because the leak flows

directly to the soil (i.e., there is no encasement) and the direct-buried pipe provides minimal soil shielding. This scenario is not applicable to the 241-AZ-702 ventilation system. Therefore, no additional controls, beyond those listed in the BIO, are required.

3.4.2.8 Unplanned Excavation in Cribs, Ditches, and Ponds. This accident considers inadvertent excavation in a crib, ditch, or pond that contains a large quantity of contaminated soil. This accident does not involve the 241-AZ-702 ventilation system. Therefore, no additional controls, beyond those listed in the BIO, are required.

3.4.2.9 Caustic Spray Leak. This accident involves a spray release of sodium hydroxide from a 1-in. Schedule 10 commercial steel pipe while the solution is being transferred to a waste tank. While this accident is associated with a waste tank, the scenario does not include the ventilation system of the tank, therefore this accident does not involve the 241-AZ-702 ventilation system. Therefore, no additional controls, beyond those listed in the BIO, are required.

3.4.2.10 Sodium Fire. This accident is specific to the 2727-W Building and does not involve the 241-AZ-702 ventilation system.

3.4.2.11 Mixing of Incompatible Material - Toxic Vapor Generation. The scenario assumes a rapid uncontrolled addition of caustic to a DCRT which increases the pH level and ultimately results in the release of ammonia. The analysis applies to DCRTs, DSTs, and SSTs. The BIO analysis results in no consequences and a single Defense-in-Depth control regarding the Industrial Hygiene Program, which ensures personnel safety during chemical additions to the waste tanks. The existing BIO analysis is adequate for the 241-AZ-702 ventilation system and no additional controls, beyond those listed in the BIO, are required.

3.4.2.12 Mixing of Incompatible Material - Tank Pressurization. This scenario assumes that an uncontrolled mixture of incompatible materials in a DCRT results in a tank pressurization and an airborne release. There is nothing unique to the ventilation system that introduces new and different accident scenarios for mixing incompatible materials. Since this occurs in a DCRT, this is not applicable to the 241-AZ-702 ventilation system. Therefore, the existing BIO analysis is adequate for the 241-AZ-702 ventilation system and no additional controls, beyond those listed in the BIO, are required.

3.4.2.13 Tank Failure Due to Excessive Loads. Postulated tank failure accidents, including tank dome failure, are analyzed in the BIO, Section 5.3.2.13, "Tank Failure Due to Excessive Loads." Tank dome collapses could be initiated by excessive dome loading or from a combination of internal (e.g., pressure, vacuum, waste level, temperature) and external (e.g., soil, equipment, seismic) loads. The only potential accident initiator identified in the BIO that is related to the 241-AZ-702 ventilation system is excessive vacuum caused by failures in the ventilation system with continued exhaust operation. Note that the potential for dome collapse caused by Flammable Gas Deflagrations is analyzed in Section 3.4.2.14.

The primary source of excessive vacuum would be from the main ventilation fans. The inlet breather subsystem for each tank includes pressure control valves to maintain tank pressure within the design limits and vacuum relief valves which protect against excessive negative pressure in the primary tank. A failure in the system that generated an excessive vacuum condition in the tank headspace (either fan over speed or inlet plugging) would actuate the vacuum relief valve. Subsequent failure of the vacuum relief valve could lead to excessive vacuum and tearing of the primary tank liner. However, this will not lead to a release of tank material (WHC-SD-TWR-RPT-002, *Structural Integrity and Potential Failure Modes of the Hanford High-Level Waste Tanks*).

The BIO concludes there is no need for a safety limit on excessive vacuum. It references several recent analyses which discuss accidents that could result in excessive vacuum. The bounding accident resulting in the highest vacuum is a solvent fire which results in a negative pressure of -55.16 kPa (-8 psig). Details of the accident analysis are contained in Section 5.3.2.13 of the BIO, WHC-SD-WM-TI-775, *Structural Assessment of Accident Loads*, and WHC-SD-TWR-RPT-002. The scenario is bounding because it results in a vacuum 4.4 times the maximum vacuum possible running the 241-AZ-702 system. The BIO also considered fan over speed and inlet plugging which were not bounding. The maximum vacuum on the fan curve for 241-AZ-702 fans plus the recirculation fan is a gauge pressure of -12.3 kPa (-49.5 in. water gauge or -1.8 psig) (Section 2.5.1.2). In the analysis for the BIO, the solvent fire results in tank failure but not in such a way as to provide a release to the environment. In addition, WHC-SD-WM-TI-775 suggests that some tank damage could occur at -6.9 kPa to -13.8 kPa (-1 to -2 psig), although there is no release due to this damage (WHC-SD-TWR-RPT-002). Protecting the tank is a programmatic issue; there is no safety issue since the worst case excessive vacuum does not result in onsite, offsite, or environmental consequences.

3.4.2.13.1 Controls. Because excessive vacuum results in no release, no controls are required for the 241-AZ-702 ventilation system for this accident. The other controls established in the BIO are unrelated to ventilation and thus are unaffected by the presence of the 241-AZ-702 ventilation system (BIO, Tables 5.3.2.13-2, "Technical Safety Requirement Controls for Load Drops" and 5.3.2.13-3, "Defense-in-Depth, Control for Load Drops")

3.4.2.14 Deflagration Accident. The deflagration accident for the aging waste tanks (with the 241-A-702 ventilation system) has been analyzed in the BIO, Section 5.3.2.14, "Flammable Gas Deflagrations." This analysis (as will be shown below) is also bounding for the 241-AZ-702 ventilation system.

3.4.2.14.1 Deflagration Accident Scenario. Steady state flammable gas generation is expected from all of the AWF tanks. Steady state flammable gas generation is dependent on several parameters including heat load, waste temperature, total organic carbon (TOC) content, aluminum content, and nitrate/nitrite content. The exact influence these parameters have on flammable gas generation is unknown. However, it is estimated that, with current AWF conditions, a condition > 25% of the lower flammability limit (LFL) in the tank dome space can not occur in less than 24 days after the loss of active ventilation (HNF-SD-WM-CN-117, *Calculation of Hydrogen Release Rate at Steady State for Double-Shell Tanks*). This calculation is not considered

to be a "design basis analysis" because of the considerable uncertainty associated with it and because it uses non-bounding assumptions for tank and waste conditions. Rather it is the best available quantitative basis for the prediction that interruption of ventilation flow does not result in imminent danger of deflagration (assuming current tank contents).

Note that the ventilation system mitigates for steady-state flammable gas accumulation but does not mitigate for gas release events (i.e., waste intrusive activities or spontaneous release events). Waste intrusive activities are discontinued on loss of ventilation. Also, ventilation is not credited for gas release event (GRE) protection. The ventilation function addresses steady state release and accumulation.

No credit was taken in the BIO analysis for any beneficial effects that flammable gas monitoring, ignition control practices, or ventilation could have to either prevent or mitigate an accident. An unmitigated, unprevented deflagration accident frequency was determined to be anticipated (Table B-1, Event Numbers 33 and 34).

3.4.2.14.2 Deflagration Accident Source Term. Because the accident scenario analyzed in the BIO (for the 241-A-702 ventilation system) assumes no controls (i.e., no ventilation), the only source term change that will result from applying the same analysis to the 241-AZ-702 ventilation system is in the HEPA filter inventory. However, the analysis for the 241-A-702 ventilation system (documented in Attachment 5 of HNF-SD-WM-CN-099, *Radiological and Toxicological Analyses of Tank 241-AY-102 and Tank 241-C-106 Ventilation Systems*) documents the total quantity of material released from the ventilation system to be 3.6×10^{-2} L, while the 241-AZ-702 system has a total release from the ventilation system of 2.3×10^{-3} L (HNF-SD-WM-CN-099). This shows that the total material released from the 241-AZ-702 system is bounded by the amount released from the 241-A-702 system. It should also be noted that the HEPA filter contribution to the total dose consequences is several orders of magnitude less than the other contributors for both radiological and toxicological consequences and does not impact the total consequences. Thus, the BIO results for the accident without controls are still bounding for the 241-AZ-702 ventilation system. These results are shown in Section 3.4.2.14.3 below and the BIO, Table 5.3.2.14-1, "Results Assuming No Controls Accident Scenario for Flammable Gas Deflagrations."

3.4.2.14.3 Deflagration Accident Comparison to Guidelines. The radiological and toxicological risk guidelines (Table 3-8) are exceeded for the onsite receptor for the AWF tank headspace deflagration scenario. The radiological and toxicological risk guidelines for the offsite receptor, however, are met for the DST and AWF tank headspace deflagration scenarios assuming that burn pressures do not exceed the tank structural limits (i.e., lead to dome collapse). However, due to the technical uncertainties associated with the open flammable gas USQ, this assumption cannot be rigorously defended and cannot be relied upon to yield bounding results. Nevertheless, the BIO results clearly imply a need to institute controls to prevent or mitigate hazards associated with flammable gas in the AWF tanks.

Requirements to Remain Within the Risk Evaluation Guidelines. The requirements and strategy to remain within the risk guidelines are summarized in the BIO, Section 5.3.2.14, "Flammable Gas Deflagrations".

Experience indicates that other site ventilation systems have historically been adequate to sweep out the steady state generated gases. The 241-AZ-702 ventilation system has no operational history upon which to base the claim that it will also provide adequate ventilation. However, calculations (HNF-SD-WM-CN-117) show that, for best-estimate current conditions, no more than 0.057 m^3/min (2 scfm) is required to keep flammable gas concentrations below 25% of the LFL. Therefore, the nominal design flow rate of the 241-AZ-702 ventilation system is expected to be adequate. To confirm this, flammable gas monitoring will be used for a short time after full start up (steady state conditions attained) of the 241-AZ-702 ventilation system to confirm the system's ability to keep flammable gas concentrations below 25% of the LFL. The risk of this approach is low since the best-estimate calculations show a large margin between what is required and what is provided (2.83 m^3/min [100 scfm] nominal). A temporary monitoring program shall be established to benchmark the ability of the 241-AZ-702 ventilation system to sweep out flammable gas due to steady state generation. As a backup, the higher capacity 241-A-702 system will not be decommissioned until the monitoring is complete.

3.4.2.14.5 Deflagration Accident Summary of Safety-Class/ Safety-Significant Structures, Systems, and Components and Technical Safety Requirements Controls. Because of the open status of the USQ TF-96-0433, *Consolidation of Flammable Gas/Slurry Growth Unreviewed Safety Question Issues*, and the technical uncertainties associated with the flammable gas safety issue, it is assumed that all installed equipment necessary to implement the flammable gas controls merit a Safety-Class designation. Additional analysis may provide refinement to this approach. The flammable gas controls are provided in the BIO TSRs. The operation of the 241-AZ-702 ventilation system does not require any new flammable gas controls beyond those already established in the BIO.

To apply the BIO controls, a process is followed to specify the allowed safe conditions and control requirements to address the flammable gas hazards as described in the FG JCO (BIO, Appendix E, "Flammable Gas/Slurry Growth Unreviewed Safety Question: Justification for Continued Operation for the Tank Farms at the Hanford Site"). The following is the description of the application of this process to the 241-AZ-702 ventilation system equipment.

Inlet Filter Assembly. The inlet filter assembly was found to meet requirements except for four elements. A review of the equipment layout drawings and characteristics of various components was conducted which identified four components which were not in compliance with the FG JCO requirements.

The control/electrical box houses potential sparking components (switches) but is not of explosion proof design, and is located within 18 diameters of the filter opening. The HEPA filter differential pressure switch is normally sparking, not of explosion proof design, and is located within 18 diameters of the filter opening. Heat trace wiring is not qualified to National Fire Protection Association (NFPA) Class I, Division 2, Group B requirements for temperature limited operation and provides temperature control for piping in proximity to the filter opening. The air stream electrical heater is located in the filter opening and vendor data shows that

the heater could exceed the 416 °C (781 °F) temperature limit for a dome intrusive region, which is an unacceptable design.

For these components, several alternatives were provided to meet requirements, with equivalency rulings based on administratively-controlled shutdown during globally waste disturbing activities for the control/electrical box, HEPA filter differential pressure switch, and heat tracing. Administrative shutdown of unqualified components during time periods which require application of controls renders the applied condition of the equipment compliant. The air stream heater is required to meet Ignition Source Control Set 2 requirements at all times; therefore, the temperature of the heater surface would require control to limit temperature and be vapor tight or be de-energized or replaced since a fault would trip the ground fault circuit interrupter (GFCI). This is based on design of heat tracing that meets NFPA Class I, Division 2, Group B requirements.

For the heat tracing, metallic sheathing of the heat tracing with GFCI connection of the sheath was also found to provide an equipment equivalency. Addition of a grounded metallic sheath was found to provide equivalent safety by eliminating potential electrical sparking as a potential ignition source.

Recirculation Module. The recirculation module was found compliant except for the recirculation fan. The fan did not meet Air Movement Contractor Association (AMCA) 99, Standards Handbook, Type C requirements for application under Ignition Source Control Set 2 requirements. The FGEAB found that equivalent safety would be provided if an axial stop plate were included in the design to prevent fan blade mechanical sparking on the fan housing. This modification to the fan was found to be equivalent to the AMCA requirement to prevent axial restraint of the fan blades. The fan was found to have suitable radial shaft restraint to meet requirements.

Tie-Ins to Existing Equipment. Equipment tie-ins were found to meet requirements under applied controls and practices with the exception of the 20-in. riser tie-in. For the 20-in. tie-in, a reciprocating cutter application was proposed, which the FGEAB found to be a potential mechanical spark source. The FGEAB recommended that an alternative cutting technique be employed. Project W-030 personnel have identified a pipe cutting tool which was tested to satisfy the FGEAB that the maximum pipe temperature which could be reached during cutting is below 80% of autoignition and that hot particle releases, when cutting penetrates the pipe wall, would not provide a potential mechanical spark source. The tests provided pipe temperature data which was clearly bounded by 80% of the hydrogen autoignition temperature and showed that the shavings from cutting would not provide a hot particle spark inside the pipe (cuttings were continuous, rather than particle ejections).

Equipment Past First Mixing Point. Because this equipment is beyond the first mixing point, this equipment was identified to not require application of Ignition Source Controls.

3.4.2.15 Organic Solvent Fire. Some waste tanks contain separable organic solvent phases. If ignited, the burning organic can liberate sufficient energy to release hazardous material from the tank. The oxygen in the tank is the limiting parameter for this scenario. Tanks not yet vapor space sampled are assumed to contain organic solvents. The AWF tanks are considered

potential Organic Solvent containing tanks. The accident analysis presented in the BIO, Section 5.3.2.15, "Organic Solvent Fire" is a parametric analysis that evaluates the worst case configurations for DST/AWF tanks. The change from the 241-A-702 to the 241-AZ-702 ventilation system does not change the worst case configuration, and the BIO analysis remains bounding. Further discussion relative to source term differences between the analysis presented in the BIO and that available with the 241-AZ-702 ventilation system is presented in Addendum 1, Section 3.4.1.

3.4.2.16 In-Tank Fuel Fire/Deflagration. This scenario postulates that a motor vehicle shears off one or more tank risers and ruptures the vehicle fuel tank. The change from the 241-A-702 to the 241-AZ-702 ventilation system does not change the worst case scenario analyzed in the BIO, Section 5.3.2.16, "In-Tank Fuel Fire/Deflagrations," and the BIO analysis remains bounding. Further discussion relative to source term differences between the analysis presented in the BIO and that available with the 241-AZ-702 ventilation system is presented in Addendum 1, Section 3.4.1.

3.4.2.17 Organic Salt-Nitrate Reaction. Organic complexants were used during past Hanford operations and were discharged to the tank where they were mixed with sodium hydroxide, sodium nitrate, and other inorganic diluent already present in the tank. Organic complexants will react with these types of oxidizing materials. The reaction can be accelerated to a rapid combustion by heating to high temperatures by an initiator of sufficient energy. A combustion front would be generated by such a condition and would spread through the combustible waste releasing significant energy and gases. The dose due to the HEPA filter release is insignificant when compared to the results of the main reaction. This accident is applicable to the AWF per the BIO, Section 5.3.2.17, "Organic Salt-Nitrate Reaction." Safety Limit 2.1.1, "Waste Temperature" of the TSRs and the controls for the Flammable Gas Deflagrations and Tank Bump scenarios as called for in the BIO (Sections 5.3.4.2.14, "Flammable Gas Deflagrations," and 5.3.4.2.22, "Tank Bump") remain unchanged as a result of the operation of the 241-AZ-702 ventilation system.

3.4.2.18 Surface Leak Resulting In Pool. Surface leaks that result in pools have been analyzed in the BIO for transfer routes. A misrouting of waste to a valve pit was analyzed as the bounding case in the BIO, Section 5.3.2.18, "Surface Leak Resulting In the Pool." This accident is not applicable to ventilation systems, therefore the BIO analysis is bounding for the 241-AZ-702 ventilation system.

3.4.2.19 Subsurface Leak Resulting In Pool. Transfer line leaks at high flow rates that are in excess of the natural infiltration rate of the soil can result in surface pools of waste. These waste pools are a safety concern because they can cause significant onsite and offsite inhalation doses and produce significant shine and skyshine doses to the onsite receptor. However, this analysis is not applicable to the 241-AZ-702 ventilation system which services the vapor space of the AWF tanks.

3.4.2.20 Spray Leak in Structure or From Overground Transfer Line. Spray leaks have been analyzed in the BIO for existing transfer routes. A breach of containment during a transfer could result in a pressurized spray release. A spray leak in a valve pit was analyzed as the bounding case in the BIO.

These spray releases are a safety concern because, depending on the waste pressure and leak dimensions, they can be relatively efficient generators of respirable-sized aerosols. Spray leaks also apply to the DSTs and including the AWF. The BIO (Section 5.3.2.20, "Spray Leak in Structure or From Overground Waste Transfer Line") requires a Safety-Class exhaust stack continuous air monitor (CAM) interlock to the exhaust fan. This is required for the 241-AZ-702 ventilation system also.

3.4.2.21 Spray Leak From Underground Waste Transfer Lines. A construction excavation accident could conceivably breach a waste transfer line and cause a spray leak or a surface leak that results in a pool. However, this analysis is not applicable to the 241-AZ-702 ventilation system which services the vapor space of the AWF tanks.

3.4.2.22 Tank Bump Accident. A tank waste thermal rollover phenomenon, known as a Tank Bump, is a rapid steam pressurization of tank headspace. A Tank Bump is a safety concern because of the potential for a release of aerosolized waste to the environment. The Tank Bump accident has been analyzed in the BIO, and as will be shown below, the BIO results are bounding for the 241-AZ-702 ventilation system.

3.4.2.22.1 Analysis Strategy. For those tanks that pose a Tank Bump threat, the upper bound on heat load and radionuclide content is found in the Aging Waste Tanks. Tank 241-AZ-101 has nearly twice the heat load of any other AWF tank and therefore was evaluated in the BIO as the bounding tank.

3.4.2.22.2 Tank Bump Accident Scenario Assuming No Controls. Since no controls are assumed and Tank 241-AZ-101 was evaluated as the bounding tank, the BIO results do not need to be revisited for the 241-AZ-702 ventilation system. The results presented in the BIO, Table 5.3.2.22-1, "Consequences of a Tank Bump Assuming No Controls," indicate that controls are required.

3.4.2.22.3 Tank Bump Accident Comparison to Guidelines. The BIO contains the required comparison. The Tank Bump accident is considered unlikely.

3.4.2.22.4 Tank Bump Accident Controls. The Safety-Class and Safety-Significant SSCs selected in the BIO Table 5.3.2.22-2, "Safety Structures, Systems, and Components for Tank Bump," include the tank waste temperature monitoring system and the tank waste level detection system (DSTs and AWF tanks). These safety SSCs do not involve ventilation and thus are unaffected by the 241-AZ-702 ventilation system.

The TSR controls presented in BIO, Table 5.3.2.22-3, "Technical Safety Requirement Controls for Tank Bumps," involve maintaining the temperature in the AWF tanks $\leq$ 91 °C (195 °F) for all waste levels or $\leq$ 91 °C (195 °F) in the top 4.6 m (15 ft) and $\leq$ 102 °C (215 °F) in the waste below 4.6 m (15 ft). In addition, waste transfer controls and controls on process instrumentation and measuring and test equipment (to ensure that instrumentation to monitor tank temperature is maintained) are imposed. Since no TSR controls were imposed on ventilation systems for the Tank Bump scenario, the 241-AZ-702 ventilation system has no impact on the TSR controls in the BIO for this accident.

The Defense-in-Depth controls for Tank Bumps are shown in the BIO, Table 5.3.2.22-4, "Defense-in-Depth Controls for Tank Bumps," and include maintaining active ventilation. The 241-AZ-702 ventilation system will provide this capability.

Conclusion. The 241-AZ-702 ventilation system has no impact on the Tank Bump analysis as presented in the BIO, nor does its operation require the establishment of additional controls beyond those selected in the BIO.

3.4.2.23 Natural Phenomena. Natural phenomena analyzed in the BIO include high winds, lightning, and earthquakes. The accidents discussed in the BIO applicable to the 241-AZ-702 ventilation system are the seismically-induced gas release event and deflagration due to lightning. The seismically-induced GRE is bounded by the deflagration accident already discussed in the addendum. The lightning accident is bounded by the Flammable Gas Deflagration, the organic solvent fire, and the organic salt-nitrate reaction accidents. The Flammable Gas Deflagration and organic solvent fire are discussed in this addendum (Section 3.4.2.2.2). The organic salt-nitrate reaction accident is not applicable to the AWF (Section 3.4.2.17). The BIO further indicates that no Safety-Class or Safety-Significant structures, systems, and components are associated with lightning and seismic protection. The existing BIO analysis is adequate for the 241-AZ-702 ventilation system and no additional controls, beyond those listed in the BIO and Addendum 1, Section 3.4.2.2, are required.

3.4.3 Beyond Evaluation Basis Accidents

An analysis of Beyond Evaluation Basis accidents events will be documented in the Final Safety Analysis Report.

Table 3-1. Aging Waste Facility Hazards Identification.[a]

Energy Classification	Aging Waste Facility Hazards	
	Potentially Present Inside Tanks	Potentially Present Elsewhere in or Adjacent to Facility
Corrosive	Caustic, high temperature waste	Caustic
Explosive/pyrophoric	Hydrogen, ammonia, methane, nitrates	Hydrogen
Nuclear criticality	High fissile material concentration in waste	N/A
Flammable materials	Hydrogen, ammonia, methane	Rags, gasoline, lube oil, diesel fuel, grease, other
Thermal radiation	Radionuclides in tank	N/A
Chemical reactions	Uncontrolled chemical reactions	N/A
Friction	Bearings, fans, motors, other	Belts, bearings, fans, gears, motors
Electrical	Wiring, pumps, motors, electrical equipment	Battery banks, transformers, wiring, switchgear, underground wiring, cable runs, service outlets/fittings, pumps, motors, heaters, electrical equipment, high voltage, transmission lines
Kinetic-rotational	Motors, pumps	Motors, pumps, fans
Kinetic-linear	N/A	Cars, trucks, buses, obstructions, crane loads, pressure vessel blowdown, other
Mass, gravity, Height	Pits	Lifts and cranes, trucks, scaffold and ladders, pits, excavations
Pressure-volume	Stressed members, negative pressure collapse, positive pressure release	N/A
Thermal (except radiant)	N/A	Heaters

[a]The hazards identification represents the hazards that could potentially cause an uncontrolled release of radioactive or hazardous materials only. Hazards only resulting in personnel injury are not included.

N/A = not applicable.

Table 3-2. Tank Waste Liquids and Solids Analyte Concentrations.[a]

Composites concentrations (g/L)		
Analyte	DST Solids	DST Liquids
Ammonia (NH3)	6.6 E+00	7.1 E+00
Antimony (Sb)	9.2 E-01	6.4 E-03
Arsenic (As)	5.7 E+00	1.1 E-02
Barium (Ba)	5.9 E+00	3.3 E-02
Beryllium (Be)	2.4 E-01	3.8 E-03
Cadmium (Cd)	2.6 E+01	7.0 E-02
Calcium (Ca)	2.6 E+01	1.3 E+00
Cerium (Ce)	2.6 E+00	5.8 E-02
Chromium (Cr+3)	1.5 E+02	[b]
Cobalt (Co)	4.4 E+00	8.8 E-03
Cyanide (Cn)	4.7 E-01	9.1 E-02
Dysprosium (Dy)	[b]	
Lanthanum (La)	3.0 E+01	1.0 E+00
Mercury (Hg)	1.2 E-01	2.4 E-04
Neodymium (Nd)	7.0 E+00	5.6 E-03
Oxalate (C2O4)	2.8 E+02	[b]
Selenium (Se)	1.9 E+00	2.8 E-01
Sodium hydroxide (NaOH)	2.3 E+02	2.1 E+02
Sodium (Na) - NaOH[b]	3.5 E+02	2.1 E+02
Tellurium (Te)	9.3 E-01	2.7 E-03
Thallium (Tl)	1.5 E+01	3.7 E-02
TOC-oxalate[c]	7.5 E+01	4.0 E+01
Uranium (U)	4.4 E+01	1.1 E+01
Vanadium (V)	1.2 E-01	2.1 E-03

DST = double-shell tank.
TOC = Total organic carbon.

[a]The information in this table is from WHC-SD-WM-SARR-011, 1996, Toxic Chemical Considerations for Tank Farm Releases, Rev. 2, Westinghouse Hanford Company, Richland, Washington.

[b] = The best available data indicates there is not significant concentrations of this analytes in this composite.

[c] = To avoid counting the same analyte twice, the oxalate concentration was subtracted from the TOC concentration and NaOH was subtracted from the Na concentration.

Table 3-3. Headspace Gas Composite Concentrations.[a]

	Worst Case Composite[b]	
Gas	Concentration (ppmv)	Concentration (mg/m^3)[cb]
Acetonitrile	13	21.8
Ammonia	61,300	40,000
Benzene	0.4	1.3
1,3 Butadiene	0.1	0.19
Butanol	58	164
Dodecane	45	296
2-Hexanone	0.8	2.7
Methylene chloride	2	22
Nitrous oxide	67,000	110,000
Propanenitrile	5	11
Tributyl phosphate	1	12
Tridecane	50	390

[a]The information in this table is from WHC-SD-WM-SARR-011, 1996, Toxic Chemical Considerations for Tank Farm Releases, Rev. 2, Westinghouse Hanford Company, Richland, Washington.

[b]Based on worst case composites including slurry gas released.

[c]The conversion from ppmv to mg/m^3 assumes a temperature of 38 °C (100 °F) and a pressure of 740 torr (0.1 MPA).

Table 3-4. In-Tank Concentrations of the 11 Radionuclides Chosen for Inclusion in Accident Analysis.[a]

Isotope	Bq/L	ULD (Sv/L)	% dose	Bq/L	ULD (Sv/L)	% dose
	Aging Waste Facility Liquids			Aging Waste Facility Solids		
^{60}Co	7.71 E+05	4.56 E-02	0.0	4.9 E+08	2.9 E+01	0.0
^{90}Sr	5.60 E+09	3.62 E+02	25.4	2.9 E+12	1.9 E+05	10.8
^{90}Y	5.60 E+09	1.28 E+01	0.9	2.9 E+12	6.6 E+03	0.4
^{137}Cs	8.84 E+10	7.63 E+02	53.6	9.8 E+10	8.5 E+02	0.0
^{154}Eu	0.00	0.00	0.0	1.1 E+10	8.6 E+02	0.0
^{237}Np	9.20 E+04	1.34 E+01	0.9	9.9 E+08	1.4 E+05	8.4
^{238}Pu	2.75 E+03	2.92 E-01	0.0	6.7 E+07	7.1 E+03	0.4
^{239}Pu	1.20 E+06	1.39 E+02	9.8	4.4 E+08	5.1 E+04	3.0
^{241}Pu	3.39 E+05	7.56 E-01	0.1	1.7 E+09	3.7 E+03	0.2
^{241}Am	1.10 E+06	1.32 E+02	9.3	1.1 E+10	1.3 E+06	76.5
^{244}Cm	1.10 E+04	7.37 E-01	0.1	6.1 E+07	4.1 E+03	0.2
Total ULD		1.42 E+03	100.00		1.7 E+06	100.00

[a] WHC-SD-WM-SARR-037, 1996, Development of Radiological Concentrations Unit Liter Doses for TWRS FSAR Radiological Consequence Calculations, Rev. 0, Westinghouse Hanford Company, Richland, Washington.

Table 3-5. Flammable Gas Generation Rates.

Type of Flammable Gas Generation	Quantity			
	AY-101	AY-102	AZ-101	AZ-102
Vapor space from steady state generation[a]	.21 L/day (7.25E-03 ft^3/day)	.52 L/day (1.83E-02 ft^3/day)	.57 L/day (2.01E-02 ft^3/day)	.48 L/day (1.71E-02 ft^3/day)
Retained in the sludge (potential GRE)[b]	67% of the LFL if totally released	No Quantity Identified	10% of the LFL if totally released	No Quantity Identified

[a] HNF-SD-WM-CN-117, 1997, Calculations of Hydrogen Release Rate at Steady State for Double-Shell Tanks, Rev. 0, Lockheed Martin Hanford Company, Richland, Washington.

[b] WHC-SD-WM-ER-526, 1997, Evaluation of Hanford Tanks for Trapped Gas, Rev. 1C, Lockheed Martin Hanford Company, Richland, Washington.

Table 3-6. Aging Waste Facility Energy Sources.

Energy	Location	Form and Quantity
Electrical (Ignition sources and high voltage)	• Dome space • Ventilation buildings • Ventilation system • External equipment • Pump • Pump pit/valve pit • Aboveground (near risers)	• Various electrical equipment • Ventilation fans • Monitoring and instrumentation • Material with potential electrostatic charge buildup
Mechanical (including spark sources)	• Dome space • Ventilation system • External equipment • Pump • Tank intrusive activities	• Tools with spark potential • Air motion caused by active ventilation • Ventilation fans, kinetic energy (recirculation and main) • Moving parts with kinetic energy (pumps, motors, etc.)
Mechanical (potential energy)	• Tank waste	• Potential energy stored in gas bubbles compressed by hydrostatic head • Potential energy stored as saturated liquid (Tank Bump potential)
Chemical	• Tank • Vehicles (on or near tanks) • Tank farm • Ventilation buildings	• Diesel and gasoline • Lubricants
Radiant	• Transfer lines • Tank waste	• Radionuclides in tank waste
External events	• Tank farms	• Lightning • Tornadoes/high winds • Heavy rains • Earthquakes/volcanoes • Range fires

Note: A more detailed listing of the energy sources evaluated in the hazards and operability study can be found in Appendix B, Table B-6.

Table 3-7. BIO Accident Comparison Summary. (3 sheets)

No.	BIO Accident	241-AZ-702 Section	BIO Section	241-AZ-702 Comparison	TSR	Comment	Justification
1	Nuclear Criticality	3.4.2.1 and Section 6.3	5.3.2.1	Bounded by the BIO	Nuclear Criticality Safety Program	N/A	There is no mechanism to increase the plutonium concentration in the ductwork sufficiently to cause a criticality.
2a	HEPA Filter Failure - High Temp. Unfiltered Release	3.4.2.2.1	5.3.2.2	Bounding consequence analysis provided in Addendum 1, Section 3.4.2.2	LCO 3.1.4A AC 5.18.2b AC 5.18.2c AC 5.18.2e	N/A	N/A
2b	HEPA Filter Failure - High Pressure	3.4.2.2.2	5.3.2.2	Bounding consequence analysis provided in Addendum 1, Section 3.4.2.2	AC 5.18.2b AC 5.18.2c AC 5.18.2e	BIO 5.3.2.2 points to other accidents for actual consequences.	N/A
3	Fire in a Contaminated Area	3.4.2.3	5.3.2.3	Not applicable to 241-AZ-702 ventilation system in particular - no contaminated areas as described in BIO.	Ignition Control Program	Generally applicable to AWF	No (open) contaminated areas in which to spill fuel.
4	Evaporator Dump	3.4.2.4	5.3.2.4	Not applicable	N/A	N/A	N/A
5	Steam Intrusion from Interfacing Systems	3.4.2.5	5.3.2.5	Bounded by the BIO; see HEPA filter failure - due to high pressure	AC 5.18.2b AC 5.18.2c AC 5.18.2e	(see item 2 above)	(see item 2 above)
6	Leak from Railcar/ Tank Trailer	3.4.2.6	5.3.2.6	Not applicable	N/A	N/A	N/A
7	Subsurface Leak remaining Subsurface	3.4.2.7	5.3.2.7	Not applicable	N/A	N/A	N/A
8	Unplanned Excavation/ Drilling in Pond/ Ditch/Crib	3.4.2.8	5.3.2.8	Not applicable	N/A	N/A	N/A
9	Caustic Spray Leak	3.4.2.9	5.3.2.9	Not applicable to ventilation system analysis - controls required on farm	Caustic Transfer Controls applicable to AWF	N/A	N/A
10	Sodium Fire	3.4.2.10	5.3.2.10	Not applicable	N/A	Applicable only to 2727-W Bldg.	N/A

Table 3-7. BIO Accident Comparison Summary. (3 sheets)

No.	BIO Accident	241-AZ-702 Section	BIO Section	241-AZ-702 Comparison	TSR	Comment	Justification
11	Mixing of Incompatible Material - Toxic vapor	3.4.2.11	5.3.2.11	Not applicable - associated with DCRTs	N/A	Associated with DCRTs	N/A
12	Mixing of Incompatible Material - Tank pressurization	3.4.2.12	5.3.2.12	Not applicable - associated with DCRTs	N/A	Associated with DCRTs	N/A
13a	Tank Failure Due to Excessive Loads	3.4.2.13	5.3.2.13	Not applicable to operation of the ventilation system.	Tank load control program	N/A	N/A
13b	Tank Failure due to vacuum or degradation	3.4.2.13	5.3.2.13	Bounded by the BIO	Tank load control program	Tank damage which causes releases cannot occur at the capability of the fans	The fans cannot draw enough vacuum to cause releases either onsite or offsite.
14	Flammable Gas Deflagration	3.4.2.14	5.3.2.14	Bounded by the consequence accident in the BIO.	LCO 3.2.1 AC 5.18.2b AC 5.18.2c AC 5.18.2e	No changes required to LCO; change needed to cover HEME and HEGA in admin. control (see item 2 above)	Basis for the measurement frequency of 25% of the LFL in the action statements is the CN-117 which governs the 241-AZ-702
15	Organic Solvent Fire	3.4.2.15	5.3.2.15	Bounded by the BIO	AC 5.18.2b AC 5.18.2c AC 5.18.2e	See item 2 above.	See item 2 above.
16	In-Tank Fuel Fire/ Deflagration	3.4.2.16	5.3.2.16	Bounded by the BIO	AC 5.18.2b AC 5.18.2c AC 5.18.2e	See item 2 above.	See item 2 above.
17	Organic Salt-Nitrate Reaction	3.4.2.17	5.3.2.17	Same as the BIO.	SL 2.1.1, LCO 3.3.2, LCO 3.2.1, AC 5.18.2b AC 5.18.2c AC 5.18.2e	N/A	N/A
18	Surface Leak Resulting in Pool	3.4.2.18	5.3.2.18	Not applicable - related to transfer lines	N/A	N/A	N/A
19	Subsurface Leak Resulting in Pool	3.4.2.19	5.3.2.19	Not applicable - related to transfer lines	N/A	N/A	N/A
20	Spray Leak in Structure or From Overground Waste Transfer Lines	3.4.2.20	5.3.2.20	Applicable	Requires CAM interlock LCO 3.1.4A	N/A	N/A
21	Spray Leak from Underground Waste Transfer Lines	3.4.2.21	5.3.2.21	Not applicable - related to transfer lines.	N/A	N/A	N/A
22	Tank Bump	3.4.2.22	5.3.2.22	Same as the BIO	LCO 3.3.2	N/A	N/A

Table 3-7. BIO Accident Comparison Summary. (3 sheets)

No.	BIO Accident	241-AZ-702 Section	BIO Section	241-AZ-702 Comparison	TSR	Comment	Justification
23	Natural Phenomena - High wind - Lightning - Seismic	3.4.2.23	5.3.2.23	Bounded by the BIO	Controls as listed for the seismically induced GREs and lightning strikes.	General applicability to the AWF	N/A

AC = Administrative Control.
AWF = Aging Waste Facility.
BIO = HNF-SD-WM-BIO-001, 1997, Tank Waste Remediation System Basis for Interim Operation, Rev. 1, Duke Engineering and Services, Hanford, Richland, Washington.
CAM = continuous air monitor.
DCRT = double-contained receiver tank.
GRE = gas release event.
HEGA = high-efficiency gas adsorber.
HEME = high-efficiency mist eliminator.
HEPA = high-efficiency particulate air (filter).
LCO = Limiting Condition for Operation.
N/A = not applicable.
SL = Safety Limit.

Table 3-8. Radiological Risk Guidelines.[a]

Frequency Category	Frequency Range (yr^{-1})	Effective Dose Equivalent (rem)	
		Onsite	Offsite
Anticipated	$>10^{-2}$	.5	0.1
Unlikely	$10^{-4} < f \leq 10^{-2}$	5	0.5
Extremely unlikely	$10^{-6} < f \leq 10^{-4}$	10	4

[a]The information in this table is from WHC-CM-4-46, Safety Analysis Manual, Section 7.0, "Risk," Rev. 1, Westinghouse Hanford Company, Richland, Washington.

Refer to Appendix F, "Site-wide Controlled Manual Cross Reference Table," of the BIO for cross-walk between Site-wide controlled manuals (e.g., WHC-CM-X-XX) superseded by Fluor Daniel Hanford, Inc., Procedures (e.g., HNF-PRO-XXX).

Table 3-9. Toxicological Risk Evaluation Guidelines.[a]

Frequency Category	Frequency Range (yr^{-1})	Primary Concentration Guidelines	
		Onsite	Offsite
Anticipated	$>10^{-2}$	$\leq$ ERPG-1	$\leq$ PEL-TWA
Unlikely	$10^{-4} < f \leq 10^{-2}$	$\leq$ ERPG-2	$\leq$ ERPG-1
Extremely unlikely	$10^{-6} < f \leq 10^{-4}$	$\leq$ ERPG-3	$\leq$ ERPG-2

ERPG = Emergency Response Planning Guideline.
PEL-TWA = permissible exposure limit-time weighted average.

[a]The information in this table is from WHC-CM-4-46, Safety Analysis Manual, Section 7.0, "Risk," Rev. 4, Westinghouse Hanford Company, Richland, Washington.

Refer to Appendix F, "Site-wide Controlled Manual Cross Reference Table," of the BIO for cross-walk between Site-wide controlled manuals (e.g., WHC-CM-X-XX) superseded by Fluor Daniel Hanford, Inc., Procedures (e.g., HNF-PRO-XXX).

This page intentionally left blank.

4.0 SAFETY STRUCTURES, SYSTEMS, AND COMPONENTS

The safety classifications for the 241-AZ-702 ventilation system structures, systems, and components (SSCs) are presented in the following sections. Safety classifications for Tank Waste Remediation System (TWRS) facility SSCs are described in the HNF-SD-WM-BIO-001, *Tank Waste Remediation System Basis for Interim Operation*, (BIO), Section 2.1, "Structures, Systems, and Components Important to Safety."

4.1 INTRODUCTION

The controls selected for each accident are described in Section 3.0, "Hazard and Accident Analyses." The selection process follows the SSC classification methodology described in WHC-CM-4-46[1],, *Safety Analysis Manual*.

The SSCs included in this report are divided into two categories, Safety-Class SSCs and Safety-Significant SSCs. See the BIO, Section 2.1, "Structures, Systems and Components Important to Safety" for definitions of all the terms used to categorize SSCs.

4.2 REQUIREMENTS

DOE Orders and standards that provide requirements and guidance for safety classification of SSCs are as listed in the BIO.

4.3 SAFETY-CLASS STRUCTURES, SYSTEMS, AND COMPONENTS

This section provides information about the Safety-Class SSCs identified in Section 3.0 "Hazard and Accident Analyses" of this addendum. Table 4-1 provides a categorization of those SSCs.

4.3.1 Safety-Class Structures, Systems, and Components

The following is a discussion of the Safety-Class considerations associated with the 241-AZ-702 ventilation system and the exhaust continuous air monitor (CAM) interlock.

---

[1]Refer to Appendix F, "Site-wide Controlled Manual Cross Reference Table," of the BIO for cross-walk between Site-wide controlled manuals (e.g., WHC-CM-X-XX) superseded by Fluor Daniel Hanford, Inc., Procedures (e.g., HNF-PRO-XXX).

4.3.1.1 Safety Function. The deflagration accident described previously in Section 3.4.2.14, "Deflagration Accident" requires the provision of tank ventilation flow to be a Safety-Class function. Components that would be designated Safety-Class are those whose failure could block the flow path or deprive the flow of its motive force (e.g., ducting, valves, filters, fans, electrical distribution system). In addition, instrumentation critical to sensing flow are designated Safety-Class. See HNF-SD-WM-SEL-040.

The safety function is achieved by the 241-AZ-702 ventilation system SSCs which were originally designated to meet Safety-Significant criteria. The bases for this Safety-Significant designation were developed before the declaration of the Flammable Gas Unreviewed Safety Question (USQ) TF-96-0433. Therefore, the design, procurement and construction of the 241-AZ-702 ventilation system meets, as a minimum, applicable Safety-Significant criteria.

Another control is a result of the spray leak accident, described previously in Section 3.4.2.20, "Spray Leak in Structure or From Overground Transfer Line." This accident requires a continuous air monitor (CAM) interlock on the exhaust stack to shut down the exhaust fan should the exhaust high-efficiency particulate air (HEPA) filters breakthrough.

4.3.1.2 System Descriptions. The 241-AZ-702 ventilation system maintains adequate flow by continuous operation of the fans and provisions for switching to an alternate fan and filter bank during maintenance. Section 2.5 "Process Description" of this addendum provides a detailed description of the ventilation system.

The exhaust stack CAM interlock transfers the flow from one train to the other upon CAM alarm. This is slightly different than the interlock described in the BIO, but is allowed under the compensatory measures for BIO Implementation (Technical Safety Requirements [TSR] Limiting Condition for Operation [LCO] 3.1.4A, "Ventilation Stack Continuous Air Monitor [CAM] Interlock Systems").

4.3.1.3 Controls (Technical Safety Requirements). The additional control for the 241-AZ-702 ventilation system required to support the SSCs for the 241-AZ-702 ventilation system is in place within the TSRs which is summarized in the BIO, Table 6-1, "Hazard and Accident Analyses; Safety Structures, Systems, and Components; and Technical Safety Requirement Cross Reference."

The Administrative Control (TSR AC 5.18, "HEPA Filter Controls") governing HEPA filter loading requires the addition of the 241-AZ-702 ventilation system high-efficiency mist eliminator (HEME) loading maximum of 800 mrem/hr and replacement of the high-efficiency gas adsorber (HEGA) filter before the upstream HEPA filter in the associated filter train has been replaced 20 times. Additionally, an efficiency requirement is placed on the HEPA filters upstream of the HEGA.

There are no changes required to LCO 3.1.4A, except to include its applicability to the 241-AZ-702 ventilation system.

4.4 SAFETY-SIGNIFICANT STRUCTURES, SYSTEMS, AND COMPONENTS

4.4.1 Safety-Significant Structures, Systems, and Components

There are no unique Safety-Significant SSCs designated for the 241-AZ-702 ventilation system.

This page intentionally left blank.

Table 4-1. Safety-Class SSCs for the 241-AZ-702 Ventilation System.

SSC	Accident(s)	Safety Functions
Ventilation System - Safety-Class[a] (by designation) - Safety-Significant (by design)	Deflagration	Maintain flammable gas concentrations in the tank dome spaces, due to steady-state releases, below 25% of the LFL.
CAM Interlock - Safety-Class for spray leak accident - Safety-Significant for HEPA filter failure accident	HEPA filter failure - high temperature Spray leak in structure or from overground waste transfer line	Mitigate radiological and toxicological releases to the environment.

CAM = continuous air monitor.
HEPA = high-efficiency particulate air (filter).
LFL = Lower Flammability Limit.

[a]The actual 241-AZ-702 ventilation system configuration, consistent with original design requirements, meets Safety-Significant design criteria. Allocation of design margins may demonstrate that certain Safety-Class requirements are met by the original design.

This page intentionally left blank.

5.0 DERIVATION OF TECHNICAL SAFETY REQUIREMENTS

5.1 INTRODUCTION

The existing operating envelope for the Tank Waste Remediation System (TWRS) is defined by the Technical Safety Requirements (TSRs) listed in Chapter 6.0, "Operational Controls" of HNF-SD-WM-BIO-001, *Tank Waste Remediation System Basis for Interim Operation*, (BIO). These controls are implemented through HNF-SD-WM-TSR-006, *Tank Waste Remediation System Technical Safety Requirements*, prepared using the guidance of U.S. Department of Energy (DOE) 5480.22, *Technical Safety Requirements*. The purpose of this section is to identify the TSRs that must be added to the BIO to bring the W-030 ventilation upgrade within the TWRS safety envelope.

5.2 REQUIREMENTS

The DOE Orders required for establishing the safety basis for the 241-AZ-702 ventilation system are as listed in the main body of the BIO.

5.3 TECHNICAL SAFETY REQUIREMENTS COVERAGE, AND DERIVATIONS

The accident analysis in Section 3.0, "Hazard and Accident Analyses" along with the designation of safety Structures, Systems, and Components (SSCs) and the associated TSRs in Section 4.0, "Safety Structures, Systems and Components" indicated that operation of the 241-AZ-702 ventilation system is bounded by the TWRS TSRs. However, an addition to the TSR Administrative Control (AC) 5.18, "HEPA Filter Controls" program is required to limit the inventories on high-efficiency particulate air (HEPA), high-efficiency gas adsorber (HEGA), and high-efficiency mist eliminator (HEME) filters and prefilters to protect the source term assumptions in the accident analyses. This control has been added to BIO, Table 6-1, "Hazard and Accident Analysis; Safety Structures, Systems, and Components; and Technical Safety Requirement Cross Reference," to account for the reanalyzed accident scenarios and allows the BIO to envelope operation of the 241-AZ-702 ventilation system. The BIO, Table 6-1, "Hazard and Accident Analyses; Safety Structures, Systems, and Components; and Technical Safety Requirements Cross Reference," correlates the reanalyzed accident scenarios with the necessary controls and includes the Safety-Class and Safety-Significant SSCs, the type of TSR control (i.e., Limiting Condition for Operation [LCO] or AC) and the specific location of the control within the TSR (e.g., LCO 3.2.1 "DST and AWF Ventilation System" or AC 5.18), and a summary of the key elements of the TSR derivation basis.

The Administrative Control (BIO TSR AC 5.18, "HEPA Filter Controls") governing HEPA filter loading requires the addition of the 241-AZ-702 ventilation system HEME loading maximum of 800 mrem/hr and replacement of the HEGA filter before the upstream HEPA filter in the associated filter train has been replaced 20 times. Additionally, an efficiency testing requirement is placed on the HEPA filters upstream of the HEGA.

Other TSRs required for the 241-AZ-702 ventilation system are not unique to the 241-AZ-702 ventilation system and are covered by TSRs previously identified in the BIO.

5.4 DERIVATION OF FACILITY MODES

The operational modes for the TWRS facility are defined in the TSRs. Operation of the 241-AZ-702 ventilation system does not change any of these definitions of facility operating modes.

5.5 INTERFACE WITH TECHNICAL SAFETY REQUIREMENTS FROM OTHER FACILITIES

The TSRs for the 241-AZ-702 ventilation system are contained within the TSRs for the TWRS. Any interfaces between the TWRS TSRs and the TSRs from other facilities will be determined in the Final Safety Analysis Report.

6.0 PREVENTION OF INADVERTENT CRITICALITY

This section contains information relevant to prevention of inadvertent criticality as a result of operation of the 241-AZ-702 ventilation system. See Sections 4.3, "Criticality Protection" and 5.3.2.1, "Nuclear Criticality" of the *Tank Waste Remediation System Basis for Interim Operation*, (BIO), HNF-SD-WM-BIO-001 for further information on the TWRS specific criticality safety and protection program. The program ensures that sufficient controls are in place to reduce the likelihood of inadvertent nuclear criticality excursions as a result of the activities performed within the Tank Waste Remediation System (TWRS) facilities.

6.1 REQUIREMENTS

See the BIO, Sections 4.3 and 5.3.2.1 for requirements.

6.2 FACILITY IMPLEMENTATION

See the BIO, Sections 4.3 and 5.3.2.1 for facility implementation.

6.3 PROJECT IMPLEMENTATION

The WHC-SD-WM-TI-725, *Tank Farm Nuclear Criticality Review*, evaluated the possibility of a nuclear criticality occurring in tank farm facilities. Considering current plutonium inventories and operating conditions, it was concluded that a nuclear criticality accident was not credible in Hanford Site double-contained receiver tanks (DCRTs), double-shell tanks (DSTs), and single-shell tanks (SSTs). The discussion then presented an analysis of a hypothetical criticality accident resulting from the transfer of new plutonium inventory into the tank farms. No new conditions or configurations of plutonium are introduced into the tank farms by the 241-AZ-702 ventilation systems, and there is no change in the likelihood of a criticality for normal storage and operations at tank farms due to the implementation of this system.

The potential for criticality within the ventilation system itself has also been considered. The largest duct in the system has a 25.4 cm (10-in.) diameter. An infinitely long 25.4 cm diameter duct would need to be filled with waste material containing about 22 g Pu/liter (1.4 lb Pu/ft^3) in order to achieve criticality. All the waste in tanks exhibits plutonium concentrations substantially less than the subcritical limit of 2.6 g Pu/liter (0.16 lb Pu/ft^3). In fact the maximum concentration observed in tanks is about 0.35 g Pu/liter (0.022 lb Pu/ft^3) (although there was a single sample of 0.7 g Pu/liter [0.044 lb Pu/ft^3]). Most of the tanks exhibit concentrations substantially less. Thus any explosion or other excursion which might be postulated to force waste material into the ventilation system would not, by itself, result in a criticality concern.

From the foregoing discussion, it can be concluded that a mechanism capable of increasing plutonium concentration by a factor of 60-100 or more would necessarily have to function in order to achieve a condition of potential criticality. Plutonium buildup in ventilation systems such as that experienced at the Rocky Flats facility or at the Hanford Plutonium Finishing Plant (Z Plant) (PFP) involves either the transport of material which was highly concentrated to begin with, e.g., plutonium metal or concentrated oxide, or which was highly volatile, e.g., plutonium hexafluoride. Neither of these conditions pertain to the material in the Hanford tanks. The plutonium in high level neutralized waste is sorbed with the neutralized oxyhydroxides; thus it is neither easily airborne nor volatile.

Thermally driven increases in plutonium concentration can also be considered, i.e., those driven by fire in the tank. However, the aging waste facility (AWF) tanks have not been identified as organic nitrate tanks and thus the waste will not burn. Thus plutonium segregation and/or concentration due to combustion of organic nitrate is not a concern for operation of the 241-AZ-702 ventilation system.

To date none of these tanks have been identified as organic solvent containing tanks, although sampling has not yet been completed to verify that for the tanks of concern. Further, solvent fires primarily involve the solvent itself, and minimal impact on the sludge would be expected. Hence solvent fires are not expected to be a source of plutonium segregation and/or concentration for these tanks.

Finally, existing ventilation data was sought to determine if any plutonium segregation was indicated. There is comparatively little data available upstream of the high-efficiency particulate air (HEPA) filters. Some gamma spectrometry has been performed on the HEPA filters. This data usually indicates the presence of large amounts of ^{137}Cs, but gamma spectrometry cannot distinguish the weak gammas of plutonium in the presence of stronger gamma emitters. More complete analyses are performed downstream of the HEPAs and are reported in the annual *Radionuclide Air Emissions Report for the Hanford Site, Calendar Year 1995* , (DOE/RL-96-37). The ratios of common, non-volatile isotopes to plutonium for various tank farm stack samples can be compared to similar ratios for the source term reported in the BIO as a rough indicator of plutonium concentration by the ventilation process. The non-volatile isotope is taken as an indicator of the behavior of all the non-volatile, non-plutonium constituents of waste. If the ratios of a non-volatile isotope to plutonium in the ventilation system are similar to those found in the tank waste, this can be taken as an indicator that no concentration of plutonium is occurring in the ventilation process. The ^{90}Sr was chosen since it is relatively non-volatile and is present in most ventilation samples. The range of $^{90}Sr/^{239}Pu$ for the source term in the BIO is 33 to 6600 (HNF-SD-WM-CN-108, *Calculation of Isotopic Ratios in Tank Farms Ventilation Systems*). The range of $^{90}Sr/^{239}Pu$ for the 1995 stack release data is 37 to 2200, a similar range of values. This rough comparison does not suggest any notable segregation or reconcentration of plutonium in the ventilation system.

Based on understanding of the relevant phenomena and the limited data discussed above, it is concluded that there is no potential for criticality in the 241-AZ-702 ventilation system.

7.0 RADIATION PROTECTION

This section identifies the requirements for radiation protection for Tank Waste Remediation System (TWRS) facilities and operations and the implementing program documents.

7.1 REQUIREMENTS

See *Tank Waste Remediation System Basis for Interim Operation*, (BIO), HNF-SD-WM-BIO-001, Section 4.4, "Radiological Protection" for requirements.

7.2 FACILITY IMPLEMENTATION

See the BIO, Section 4.4 for facility implementation.

7.3 PROJECT IMPLEMENTATION

The radiation dose and dose rate design limits are delineated in project functional design criteria, WHC-SD-600-FDC-001, *Functional Design Criteria for the Tank Farm Ventilation Upgrade, Project W-030*, and WHC-SD-W030-RD-001, *Supplemental Definition of Requirements for Tank Farm Ventilation Upgrade, Project W-030*. Design details required to comply with the criteria are verified in calculations completed by the architect-engineer/constructor. Programmatic elements of radiation protection are governed by existing Site and facility programs. Descriptions of radiation monitoring and instrumentation are given in the System Description of this document. No requirements above those identified in the programmatic documents were required for the 241-AZ-702 ventilation system.

This page intentionally left blank.

8.0 HAZARDOUS MATERIAL PROTECTION

This section identifies the requirements for hazardous material protection other than radiological hazards for Tank Waste Remediation System (TWRS) facilities and operations and the implementing program documents.

8.1 REQUIREMENTS

See *Tank Waste Remediation System Basis for Interim Operation*, (BIO), HNF-SD-WM-BIO-001, Section 4.5, "Hazardous Material Protection" for requirements.

8.2 FACILITY IMPLEMENTATION

See the BIO, Section 4.5 for facility implementation.

8.3 PROJECT IMPLEMENTATION

No project-specific requirements related to hazardous material protection were identified for the 241-AZ-702 ventilation system.

This page intentionally left blank.

9.0 RADIOACTIVE AND HAZARDOUS WASTE MANAGEMENT

This section lists the requirement documents for the radioactive and hazardous waste management for the 241-AZ-702 ventilation system.

9.1 REQUIREMENTS

See *Tank Waste Remediation System Basis for Interim Operation*, (BIO), HNF-SD-WM-BIO-001, Section 4.6, "Radioactive and Hazardous Material Waste Management" for requirements.

9.2 FACILITY IMPLEMENTATION

See the BIO, Section 4.6 for facility implementation.

9.3 PROJECT IMPLEMENTATION

No additional requirements relating to radioactive and hazardous waste management were identified for the 241-AZ-702 ventilation system.

This page intentionally left blank.

10.0 INITIAL TESTING, IN-SERVICE SURVEILLANCE, AND MAINTENANCE

This section identifies the requirements for initial testing, in-service surveillance, and maintenance for Tank Waste Remediation System (TWRS) facilities and operations and their implementing program documents.

10.1 REQUIREMENTS

See *Tank Waste Remediation System Basis for Interim Operation*, (BIO), HNF-SD-WM-BIO-001, Section 4.7, "Testing, Surveillance, and Maintenance" for requirements.

10.2 FACILITY IMPLEMENTATION

See the BIO, Section 4.7 for facility implementation.

10.3 PROJECT IMPLEMENTATION

10.3.1 Initial Testing

10.3.1.1 Testing Program. Organizational responsibilities for initial testing phases of the project are defined in WHC-SD-W030-SUP-001, *Startup Plan - Tank Farm Ventilation Upgrade Project W-030*. The initial testing program is described in WHC-SD-W030-SUP-003, *Startup Test Plan - Tank Farm Ventilation Upgrade W-030*.

Three phases of testing are performed during startup of the 241-AZ-702 ventilation system. These are the acceptance test procedures (ATPs), the pre-operational test procedures (POTPs), and the operational test procedures (OTPs). The ATPs and POTPs are performed before initial system operation while the OTPs are performed after system startup. Eight POTPs are performed; seven of the eight POTPs test individual sub-systems. The eighth POTP tests the overall system, checking for interactions between the sub-systems and for instabilities of total system operation. Completion of the POTPs establishes the stable operational settings of the system. The parameters evaluated in the test and their acceptance criteria are defined in WHC-SD-W030-SUP-003.

10.3.1.2 System Construction. System construction is performed under the current Authorization Basis and is not covered under this safety analysis document. Work packages are reviewed using the USQ process (HNF-IP-0842, *TWRS Administration*, Volume IV, Section 5.4) and the applicable Authorization Basis. A key component of the Authorization Basis against which construction was evaluated is Standing Order 97-01, *Compensatory Measures to Address Flammable Gas Hazards (East Tank Farms)*.

10.3.1.3 System Tie-In. The 241-AZ-702 ventilation system hot tie-in will be accomplished per the WHC-SD-W030-SUP-004, *Hot Tie-In Plan, Tank Farm Ventilation Upgrade Program*.

10.3.1.4 Temporary Flammable Gas Monitoring. A temporary monitoring program shall be established to benchmark the ability of the 241-AZ-702 ventilation system to sweep out flammable gas due to steady state generation. A plan has been prepared providing the details of the testing to demonstrate compliance with the following criterion (HNF-SD-W030-TC-001).

> Criterion: The 241-AZ-702 ventilation system shall be considered successful at maintaining tank flammable gas concentrations within acceptable levels if the flammable gas concentration is less than 25% of the LFL (BIO, Section 4.7).

In order to demonstrate compliance with this criterion a mix of sampling, and online (Standard Hydrogen Monitoring System [SHMS] or gas chromatograph [GC]) or portable instruments (combustible gas meter [CGM] and Organic Vapor Meter [OVM] may be used. At least two samples must be taken to validate each instrument used.

The data must be collected after the tank has had time to approach steady state conditions and shall be used to calculate a one-sided 95% upper confidence interval based on the precision and accuracy of the instrument used. As a backup, the higher capacity 241-AZ-702 system shall not be deactivated until the monitoring is complete and the above requirements have been met.

The flammable gas monitoring plan for the 241-AZ-702 ventilation system (Fowler 1997) discusses measurement of the flammable gas concentrations in the exhaust stream, temperatures of the waste and flow rates of the system to document the ability of the new system to mitigate flammable gas build up due to steady-state generation. The instruments, calibration requirements, collection frequencies and procedures to follow are defined in the plan. A discussion is included on how the data will be used to define the concentrations (e.g., modeling methods). The monitoring will occur after system startup.

10.3.2 In-Service Surveillance

Procedures for surveillance testing will be developed in accordance to U.S. Department of Energy (DOE) 5480.19, *Conduct of Operations Requirements for DOE Facilities.*

10.3.3 Maintenance

Procedures for maintenance will be developed in accordance to DOE 5480.19.

11.0 OPERATIONAL SAFETY

This section identifies requirements for conduct of operations, Aging Waste Facility (AWF) fire protection, and the implementing program documents directly resulting from the installation/operation of the 241-AZ-702 ventilation system.

11.1 REQUIREMENTS

See *Tank Waste Remediation System Basis for Interim Operation*, (BIO), HNF-SD-WM-BIO-001, Sections 4.8, "Conduct of Operations," 4.9, "Work Control," and 4.10, "Fire Protection Program" for requirements.

11.2 FACILITY IMPLEMENTATION

See the BIO, Section 4.8, 4.9, and 4.10 for facility implementation.

11.3 PROJECT IMPLEMENTATION

A revision to HNF-SD-WM-FHA-020, *Fire Hazards Analysis for Tank Farms*, was performed for the 241-AZ-702 ventilation system. The conclusion from this analysis is as described below.

The risk of fire loss in the three-building facility is well managed through the placement of walls of fire rated construction and through the use of fire sprinkler systems for fire suppression throughout. Combustible material loadings are held to a minimum in each fire area and exposure dangers are mitigated by physical separation. The protection of this facility and its contents, as well as the safety of its occupants, appear to be more than adequately assured. Water supplies for this location do not have a second supply as required by U.S. Department of Energy (DOE) 6430.1A. A second water source will be provided by Project B-604 to meet this DOE 6430.1A requirement for the entire 200 East and West Areas.

This page intentionally left blank.

12.0 PROCEDURES AND TRAINING

This section lists the requirements for the procedures and training programs for the 241-AZ-702 ventilation system.

12.1 REQUIREMENTS

See *Tank Waste Remediation System Basis for Interim Operation*, (BIO), HNF-SD-WM-BIO-001, Section 4.11, "Training and Procedures" for requirements.

12.2 FACILITY IMPLEMENTATION

See the BIO, Section 4.11 for facility implementation.

12.3 PROJECT IMPLEMENTATION

Responsibility for training on the new systems before commencement of operations is defined in WHC-SD-W030-SUP-001. Training and procedure development are to be conducted per existing site and facility requirements. Procedures and training requirements for areas specifically related to the 241-AZ-702 ventilation system will be developed in accordance with U.S. Department of Energy (DOE) 5480.19 and the results of the accident analysis of this addendum (Section 3.0 "Hazard and Accident Analysis").

This page intentionally left blank.

13.0 HUMAN FACTORS

Human factors requirements are defined for this facility in the *Tank Waste Remediation System Basis for Interim Operation*, (BIO), HNF-SD-WM-BIO-001, Section 4.18, "Human Factors." Specific requirements for the 241-AZ-702 ventilation system related to human factors above those specified in the reference are noted below.

This section lists the requirements for a human factors program to demonstrate that human factors are considered in facility design where human actions are relied upon for preventive or mitigative actions.

13.1 REQUIREMENTS

See the BIO, Section 4.18 for requirements.

13.2 FACILITY IMPLEMENTATION

See the BIO, Section 4.18 for facility implementation.

13.3 PROJECT IMPLEMENTATION

A human factors analysis for the instrument/control room and control systems was completed for the project. Results of this analysis were included in the design of the Project W-030 systems (WHC-SD-W030-ANAL-001, *Human Factors Analysis & Design Guidelines for the Tank Farm Ventilation Upgrade of AY-AZ Farms*). System design is summarized in the System Description section of this document. The human factors analysis provided location and sizes for workspace design such as monitors, keyboards, desk space area, floor space, and maintenance access. The analysis also provided for printer, monitor and label font sizes for optimal viewing and alarm size and color (and decibel level) for optimal response. Guidelines were provided for lighting, temperature and humidity control which were used in design.

This page intentionally left blank.

14.0 QUALITY ASSURANCE

This section lists the requirements for a quality assurance program to ensure the safety of personnel and the public, for environmental protection, and for the implementing program documents.

14.1 REQUIREMENTS

See *Tank Waste Remediation System Basis for Interim Operation*, (BIO), HNF-SD-WM-BIO-001, Section 4.12, "Quality Assurance" for requirements.

14.2 FACILITY IMPLEMENTATION

See the BIO, Section 4.12 for facility implementation.

14.3 PROJECT IMPLEMENTATION

Implementation of specific quality assurance requirements for the 241-AZ-702 ventilation system is controlled by WHC-SD-W030-QAPP-001, *Project Specific Quality Assurance Plan, W-030, Tank Farm Ventilation Upgrade*.

- Personnel performing work on the 241-AZ-702 ventilation system have been and will continue to be trained and qualified in accordance with the above-referenced quality assurance programs and DOE 5480.20A, *Personnel Selection, Qualification, and Training Requirements for Nuclear Facilities*.

- Quality improvement processes described in the quality assurance programs are provided for the detection and correction of quality problems throughout the design and construction of this project.

- Documents and records associated with this project have been and will be independently reviewed for completeness and accuracy. A record index is available to classify all quality assurance records to aid in retrieval.

- Work processes associated with this project have been and will be strictly adhered to in accordance with this quality assurance program. Appropriate administrative procedures have been developed and approved to control key aspects in the design and construction of this project.

- Designs associated with this project have been or will be independently reviewed and approved. Completed construction will be accurately depicted by as-built drawings upon project completion.

- Procurement of Safety-Class and Safety-Significant items for this project are in compliance with this quality assurance program. Such items have been purchased from qualified suppliers where applicable and all stated requirements have been or will be met as verified through independent inspections, tests, and assessments. Certified Vendor Information has been or will be received and appropriately indexed and filed to support continuity of service for this project.

- Inspection and testing of items associated with this project will meet required standards as verified by properly trained and qualified personnel and records supplied on project turnover will attest to accuracy and completeness.

- Periodic management assessment of this project has been and/or will be conducted to ensure this project is compliant with this quality assurance plan and the objectives stated therein.

- Independent assessments will be planned, scheduled, and conducted to confirm that project deliverables and service quality are adequate to meet operational objectives.

15.0 EMERGENCY PREPAREDNESS PROGRAM

This section identifies the requirements for the emergency preparedness functions and response at the site of the 241-AZ-702 ventilation system.

15.1 REQUIREMENTS

See *Tank Waste Remediation System Basis for Interim Operation*, (BIO), HNF-SD-WM-BIO-001, Section 4.13, "Emergency Preparedness" for facility implementation.

15.2 FACILITY IMPLEMENTATION

See the BIO, Section 4.13 for facility implementation.

15.3 PROJECT IMPLEMENTATION

No additional project-specific requirements related to emergency preparedness were identified as unique (in addition to those identified in the BIO) to the 241-AZ-702 ventilation system in Sections 3.0, "Hazard and Accident Analyses" 4.0, "Safety Structures, Systems, and Components," and 5.0, "Derivation of Technical Safety Requirements," of this addendum.

This page intentionally left blank.

16.0 PROVISIONS FOR DECONTAMINATION AND DECOMMISSIONING

This section describes provisions that facilitate future decontamination and decommissioning of the facilities with respect to the 241-AZ-702 ventilation system.

16.1 REQUIREMENTS

See *Tank Waste Remediation System Basis for Interim Operation*, (BIO), HNF-SD-WM-BIO-001, Section 4.14, "Decontamination and Decommissioning" for requirements.

16.2 IMPLEMENTATION

See the BIO, Section 4.14 for requirements.

16.3 PROJECT IMPLEMENTATION

Decontamination and decommissioning was considered in the design of the 241-AZ-702 ventilation system (WHC-SD-W030-RD-001). It requires all equipment and surfaces exposed to, or containing, radioactive materials, to be designed to minimize cracks and crevices. Materials and surfaces were specified to minimize surface contamination and enhance washdown. Because of this, the 241-AZ-702 ventilation system provides modular components, lifting rings, and access ports for decontamination.

This page intentionally left blank.

17.0 MANAGEMENT, ORGANIZATION, AND INSTITUTIONAL SAFETY PROVISIONS

This section provides the requirements specific to this section and pertinent to the safety analysis, and the implementing program documents.

17.1 REQUIREMENTS

See *Tank Waste Remediation System Basis for Interim Operation*, (BIO), HNF-SD-WM-BIO-001, Section 4.1, "Organizational Structure and Management Responsibilities" for requirements.

17.2 FACILITY IMPLEMENTATION

See the BIO, Section 4.1 for requirements.

17.3 PROJECT IMPLEMENTATION

No additional management, organization, and institutional safety provisions, above those currently in place for the Aging Waste Facility (AWF) 241-A-702 ventilation system, were introduced or required by the 241-AZ-702 ventilation system.

This page intentionally left blank.

18.0 REFERENCES

40 CFR 61, "National Emission Standards for Hazardous Air Pollutants," Code of Federal Regulations.

AMCA 99, 1986, "Standards Handbook," Air Movement and Control Association, Arlington Heights, Illinois.

ASME N510, 1989, *Testing of Nuclear Air Treatment Systems*, American National Standards Institute, New York, New York.

Bauer, J. D. 1994a, "Application for Approval for Construction Pursuant to 40 Code of Federal Regulations 60 for Ventilation Upgrades, 241-AY and 241-AZ Tank Farms," letter 9400851 to J. McCormick, Environmental Protection Agency, March 2, U.S. Department of Energy, Richland Operations Office, Richland, Washington.

Bauer, J. D., 1994b, "Notice of Construction Application Pursuant to Washington Administrative Code 173-460 Ventilation Upgrades, 241-AY and 241-AZ Tank Farms," letter 9400853 to J. S. Stohr, Washington State Department of Ecology, March 2, U.S. Department of Energy, Richland Operations Office, Richland, Washington.

DOE 76-45/19, 1979, *Job Safety Analysis*, U. S. Department of Energy, Washington, D.C.

DOE 4700.1, 1992, *Project Management System*, Change 1, U.S. Department of Energy, Washington, D.C.

DOE 5480.19, 1992, *Conduct of Operations Requirements for DOE Facilities*, Change 1, U.S. Department of Energy, Washington, D.C.

DOE 5480.20A, 1994, *Personnel Selection, Qualification, and Training Requirements for DOE Nuclear Facilities*, Change 0, U.S. Department of Energy, Washington, D.C.

DOE 5480.21, 1991, *Unreviewed Safety Questions*, Change 1, U.S. Department of Energy, Washington, D.C.

DOE 5480.22, 1996, *Technical Safety Requirements*, Change 1, U.S. Department of Energy, Washington, D.C.

DOE 5480.23, 1992, *Nuclear Safety Analysis Reports*, Change 1, U.S. Department of Energy, Washington, D.C.

DOE 6430.1A,1989, *General Design Criteria*, Change 0, U.S. Department of Energy, Washington, D.C.

DOE/EIS-0113, 1987, *Final Environmental Impact Statement: Disposal of Hanford Defense High-Level, Transuranic, and Tank Waste, Hanford Site, Richland, Washington*, U.S. Department of Energy, Richland, Washington.

DOE/RL-96-37, 1996, *Radionuclide Air Emissions Report for the Hanford Site, Calendar Year 1995*, U.S. Department of Energy, Richland Operations Office, Richland, Washington.

DOE-STD-3009-94, 1994, *Preparation Guide for U.S. Department of Energy Nonreactor Nuclear Facility Safety Analysis Reports*, Change 1, U.S. Department of Energy, Washington, D.C.

FGEAB, 1997, *Flammable Gas Equipment Advisory Board Report for Project W-030*, FGEAB 97-005 a,b,c, and 97-031, Fluor Daniel Hanford, Inc., Richland, Washington.

HNF-IP-0842, 1997, *TWRS Administration*, Rev. 0, Lockheed Martin Hanford Corporation, Richland, Washington.

HNF-SD-W030-ER-004, 1997, *Evaluation of Waste Temperatures in AWF Tanks for By Pass Mode Operation of the 702-AZ Ventilation System (Project W-030)*, Rev. 0, Numatec Hanford Corporation, Richland, Washington.

HNF-SD-WM-BIO-001, 1998, *Tank Waste Remediation System Basis For Interim Operation*, Rev. 1, Fluor Daniel Hanford, Inc., Richland, Washington.

HNF-SD-WM-FHA-020, 1998, *Fire Hazard Analysis for Tank Farms*, Rev. 0B, Lockheed Martin Hanford Corporation, Richland, Washington.

HNF-SD-W030-TC-001, 1998, *Project W-030 Flammable Gas Verification Monitoring Plan*, Rev. 1, Lockheed Martin Hanford Company, Richland, Washington.

HNF-SD-WM-CN-108, 1997, *Calculation of Isotopic Ratios in Tank Farms Ventilation Systems*, Rev. 0, Duke Engineering and Services, Hanford, Richland, Washington.

HNF-SD-WM-CN-117, 1997, *Calculations of Hydrogen Release Rate at Steady State for Double-Shell Tanks*, Rev. 0, Lockheed Martin Hanford Company, Richland, Washington.

HNF-SD-WM-SEL-040, 1998, *TWRS Facility Safety Equipment List*, Revision 0C, Lockheed Martin Hanford Corp., Richland, Washington.

HNF-SD-WM-TSR-006, 1997, *Tank Waste Remediation System Technical Safety Requirements*, Rev. 0, Duke Engineering and Services, Hanford, Inc., Richland, Washington.

HPS-SDC 4.1, *Standard Architectural-Civil Design Criteria, Design Loads for Facilities*, Revision 12 (1993) and Revision 11, U.S. Department of Energy, Richland Operations Office, Richland, Washington.

NFPA 13, *Installation of Sprinkler Systems*, National Fire Protection Association, Quincy, Massachusetts.

NFPA 72, 1996, *National Fire Alarm Code*, National Fire Protection Association, Quincy, Massachusetts.

SO 97-01, 1996, *Compensatory Measures to Address Flammable Gas Hazards (East Tank Farms)*, Rev. 0, Fluor Daniel Hanford, Inc., Richland, Washington.

TF-93-0055 (USQ Evaluation Number), 1996, *Tank Farm Ventilation Upgrade, Project W-030*, Rev. 3, Westinghouse Hanford Company, Richland, Washington.

TF-96-0433 (USQ Evaluation Number), 1996, *Consolidation of Flammable Gas/Slurry Growth Unreviewed Safety Question Issues*, Rev. 1, Westinghouse Hanford Company, Richland, Washington.

WAC-173-460, 1989, "Controls for New Sources of Toxic Air Pollutants," Washington Administrative Code.

WHC-CM-4-46, *Safety Analysis Manual*, Westinghouse Hanford Company, Richland, Washington.

WHC-SD-600-FDC-001, 1997, *Functional Design Criteria for the Tank Farm Ventilation Upgrade, Project W-030*, Rev. 4, Numatec Hanford Company, Richland, Washington.

WHC-SD-TWR-RPT-002, 1998, *Structural Integrity and Potential Failure Modes of the Hanford High-Level Waste Tanks*, Rev. 0A, Lockheed Martin Hanford Corporation, Richland, Washington.

WHC-SD-W030-ANAL-001, 1991, *Human Factors Analysis & Design Guidelines for the Tank Farm Ventilation Upgrade of AY-AZ Farms*, Rev. 0, Westinghouse Hanford Company, Richland, Washington.

WHC-SD-W030-EE-001, 1990, *Environmental Evaluation*, Rev. 0, Westinghouse Hanford Company, Richland, Washington.

WHC-SD-W030-QAPP-001, 1993, *Project Specific Quality Assurance Plan, W-030, Tank Farm Ventilation Upgrade*, Rev. 3, Westinghouse Hanford Company, Richland, Washington.

WHC-SD-W030-RD-001, 1997, *Supplemental Definition of Requirements for Tank Farm Ventilation Upgrade, Project W-030*, Rev. 3, Numatec Hanford Company, Richland, Washington.

WHC-SD-W030-SUP-001, 1995, *Startup Plan - Tank Farm Ventilation Upgrade W-030*, Rev. 0, Westinghouse Hanford Company, Richland, Washington.

WHC-SD-W030-SUP-003, 1996, *Startup Test Plan - Tank Farm Ventilation Upgrade W-030*, Rev. 0, Westinghouse Hanford Company, Richland, Washington.

WHC-SD-W030-SUP-004, 1996, *Hot Tie-In Plan, Tank Farm Ventilation Upgrade Program*, Rev. 2, Westinghouse Hanford Company, Richland, Washington.

WHC-SD-WM-CN-055, 1996, *Flammable Gas Deflagration Consequence Calculations for the Tank Waste Remediation System Basis for Interim Operation*, Rev. 1, Westinghouse Hanford Company, Richland, Washington.

WHC-SD-WM-CN-062, 1996, *HEPA Filter Failure by Fire or Heater Overtemperature and Subsequent Unfiltered Release*, Rev. 2, Duke Engineering and Services, Hanford, Richland, Washington.

WHC-SD-WM-CN-063, 1996, *Releases from Failed HEPA Filters Due to an Overpressurization Event*, Rev. 2, Duke Engineering and Services, Hanford, Richland, Washington.

WHC-SD-WM-ER-526, 1997, *Evaluation of Hanford Tanks for Trapped Gas*, Rev. 1C, Lockheed Martin Hanford Company, Richland, Washington.

WHC-SD-WM-ER-592, 1996, *Assessment of the Project W-030 Ventilation System Following a Hypothetical Gas Release Event*, Rev. 0, Westinghouse Hanford Company, Richland, Washington.

WHC-SD-WM-SARR-011, 1996, *Toxic Chemical Considerations for Tank Farm Releases*, Rev. 2, Westinghouse Hanford Company, Richland, Washington.

WHC-SD-WM-SARR-016, 1996, *Tank Waste Compositions and Atmospheric Dispersion Coefficients for Use in Safety Analysis Consequence Assessments*, Rev. 2, Westinghouse Hanford Company, Richland, Washington.

WHC-SD-WM-SARR-037, 1996, *Development of Radiological Concentrations and Unit Liter Doses for TWRS FSAR Radiological Consequence Calculations*, Rev. 0, Westinghouse Hanford Company, Richland, Washington.

WHC-SD-WM-TI-725, 1996, *Tank Farm Nuclear Criticality Review*, Rev. 0A, Westinghouse Hanford Company, Richland, Washington.

WHC-SD-WM-TI-775, 1996, *Structural Assessment of Accident Loads*, Rev. 0, Westinghouse Hanford Company, Richland, Washington.

APPENDIX A

HAZARD BASIS

This page intentionally left blank.

Table A-1. Event Categories and Relationship to Hazard Energy and Material Sources.

Event Category	Event Category Description	Hazard Energy and Material Groups
E-1	Fire	Electrical Thermal Friction Pyrophoric material Spontaneous combustion Open flame Flammable Combustibles Chemicals
E-2	Explosion	Potential (pressure) Explosive materials Chemical reactions
E-3	Loss of Containment or Confinement	Radiological Material Hazardous Material
E-4	Direct Radiological Exposure	Ionizing radiation sources
E-5	Nuclear Criticality	Fissile material
E-6	External Hazards	Non-facility events Vehicles in motion Crane
E-7	Natural Phenomena	Natural Phenomena

Note: Material at risk can be found in the BIO, since the presence of the 241-AZ-702 ventilation system does not change the TWRS material at risk.

This page intentionally left blank.

APPENDIX B

HAZARD ANALYSIS SUMMARY

This page intentionally left blank.

APPENDIX B

HAZARD ANALYSIS SUMMARY

Note: This appendix is presented for information about the initial development of the accident analyses. It was performed before the development of the *Tank Waste Remediation System Basis for Interim Operation*, (BIO), HNF-SD-WM-BIO-001, and references the former Authorization Basis documents (i.e., Interim Operational Safety Requirements [IOSRs]) which are no longer applicable. The BIO controls and Defense-in-Depth requirements take precedence. Because of this, disregard the entries in the Defense-in-Depth column. Also disregard the reference to AC 5.19 of the IOSRs in the entries associated with the Tank Bump accident which is analyzed in Section 3.4.2.22 of this addendum. Other references to IOSR administrative controls have corresponding administrative controls in the BIO TSRs (i.e., IOSR AC 5.3 is TSR AC 5.7, IOSR AC 5.13 is TSR AC 5.18, IOSR AC 5.22 is TSR AC 5.16, IOSR AC 5.24 is TSR AC 5.19, and IOSR AC 5.29 is TSR AC 5.9, 5.10, and 5.11).

B1.0 HAZARD ANALYSIS SUMMARY

Table B-1 provides the summary for the Preliminary Hazard Analysis (PHA) and Hazards and Operability (HazOp) study that was performed for the Project W-030 ventilation system. A PHA technique was used to evaluate the hazards for the Project W-030 ventilation upgrade for the Aging Waste Facility (AWF). This technique consists of first identifying the hazards (e.g., radioactive sources, wastes, and chemicals) in terms of form, quantity, and location. Additional characterization identifies the mechanisms for their accidental releases. Tables B-6 and B-7 provide an energy source checklist and a summary of hazardous events used during the evaluation. Finally, the risks from accidents associated with these hazards are evaluated in a qualitative or semi-quantitative way, depending upon the accident scenario.

The hazard evaluations address consequences to the public, collocated workers, and immediate workers. Accidental releases can result from internal events, external events, or natural phenomena. Consequences of common industrial accidents are not included, unless they: 1) initiate a release of hazardous material, or 2) worsen the consequences of a hazardous material release. Industrial accidents which could cause only occupational injuries or illnesses are addressed by the Industrial Hygiene and Safety Program, which is a required element identified in the Administrative Controls section of the IOSRs.

A HazOp study was also performed to confirm and validate the results of the PHA. The hazard definition guide shown in Table B-2 describes the process variables and the guide words used to perform the HazOp. The HazOp emphasizes the processes involved with the ventilation system and not just the individual components. Also, a check list was used to capture and evaluate all high energy sources and natural hazards that impact the Project W-030 ventilation system. The results of the PHA and HazOp are recorded in Table B-1.

B2.0 METHODOLOGY

B.2.1 Hazard Identification

This hazards analysis describes the hazards identification and evaluation process performed for the Aging Waste Facility (AWF) Tank Farms and presents the comprehensive evaluation of potential process-related hazards, natural phenomena hazards, and external hazards. These hazards arise from the form, location, and quantities of nuclear chemical waste stored in the aging waste Underground storage tanks. Operations, maintenance, testing, and construction have been considered. The hazard identification and evaluation process provides a thorough and complete qualitative evaluation of the spectrum of potential accidents involving the hazards identified. This effort forms the basis for: 1) understanding facility worker protection and environmental features, and 2) selecting potential design basis accidents (DBAs) to be further developed and quantified in Section 3.4.2 "Design Basis Accidents."

The major classification of accident categories for the ventilation system were identified as loss of containment, loss of confinement, waste disposal, criticality, natural phenomena, fire and explosion, interface, maintenance and testing, and injury to personnel. Those hazards identified as credible by the review team were recorded in the Hazard Summary Table (Table B-1). Hazardous materials evaluated included radioactive material, toxic materials, corrosive materials, reactive materials, asphyxiants, explosives, and combustibles and flammables.

B.2.1.1 Loss of Containment/Confinement. Loss of containment as a hazard will be considered as breach of ventilation system barriers resulting in the release (non-airborne) of radioactive materials or hazardous chemicals.

B.2.1.2 Loss of Confinement. Loss of confinement as a hazard category will be considered as the breach of a ventilation system barrier resulting in the release of gaseous or airborne radioactive materials or hazardous chemicals.

B.2.1.3 Waste Disposal. Consideration of waste handling and disposal hazards will be limited to those hazards involving the waste that is generated under the ventilation function and incidental to the performance of the waste storage and treatment mission at the tank farms.

The scope of this hazard identification and analysis effort specifically will not include the hazards associated with the transportation, treatment and disposal of waste materials generated incidental to the performance of the waste storage mission.

A gaseous or airborne waste effluent stream results from filtered stack exhaust through active ventilation systems (primary, annulus, and portable exhausters) and filtered exhaust through tank ventilation inlet/outlet risers in passive ventilation systems. An additional airborne waste effluent stream may be associated with filtered exhaust through ventilation inlet risers in active ventilation systems during events that result in loss of negative pressure in the tank headspace.

B.2.1.4 Criticality. The hazard identification and analysis team assumed that insufficient fissile material carryover from the tank headspace to the ventilation system takes place that could result in a significant accumulation of fissile materials in the ventilation system (Section 6.3 "Project Implementation").

B.2.1.5 Natural Phenomena. The hazards associated with natural phenomena can be considered from two different perspectives based on the effects of the event. These are the direct effects to personnel (such as direct physical consequence) and those effects that result from a sequence of events leading to a release of hazardous material that is initiated by natural phenomena as the energy source.

B.2.1.6 Fire and Explosion. Hazards associated with fire and explosion considered in the context of the ventilation function were found to be represented by two classes: 1) those hazards that result in a direct physical effect to personnel caused by the fire or explosion, and 2) those hazards that result from the release of hazardous materials that may result from a sequence of events that are initiated by the fire or explosion.

Potential concerns related to initiation of fires or explosions internal to the ventilation system components are associated with either the carryover of crystallized flammable chemicals that may accumulate in ventilation system filters and components (active and passive ventilation systems) or exhaust of gases from the tank headspace through the ventilation system (active and passive).

B.2.1.7 Interfaces. The hazards associated with interfaces with utilities and other AWF tank equipment were considered.

B.2.1.8 Maintenance and Testing. The hazards associated with maintaining and testing the Project W-030 ventilation system were included in the PHA evaluation effort.

B.2.2 Hazard Evaluation

Using the PHA and HazOp evaluation techniques, a Hazard Analysis Summary table was constructed (Table B-1). Hazard Analysis Summary tables have been used to compile the results of the hazard identification and evaluation process for the AWF Project W-030 ventilation upgrade system. The hazard tables of Table B-1 are structured using columns to present information about the hazardous materials, energy sources, and general environmental and occupational hazards associated with tank farm operations. Each column in the hazard tables is described below.

- **Hazard.** Identifies the hazard evaluated for the given entry.
- **Event Number.** Identifies sequence for the hazards evaluated.
- **Event Category.** Provides an event category descriptor based on Table A-1.

- **Postulated Event Description.** Provides details on how the hazard can occur.

- **Significant Causes or Energy Sources.** Identifies the hazard or accident initiators.

- **Receptor.** Identifies the affected party.

  Note: This Hazard Analysis Summary Table includes the immediate onsite worker; the regulations do not evaluate this receptor and it is not included in the consequence analyses of Section 3.0, "Hazard and Accident Analyses," of this addendum.

- **Credited Prevention.** Identifies engineered or administrative features that would prevent or reduce the probability of the hazard/accident from occurring.

- **Event Frequency.** Discusses qualitative or semi-quantitative assessment of the frequency of occurrence of the hazard with and without preventative features. Values found in this column are based on Table B-3.

- **Credited Mitigation.** Identifies engineered or administrative features that would mitigate or reduce the consequences of the hazard/accident.

- **Consequences.** Discusses qualitative or semi-quantitative assessment of the consequences of the hazard with and without mitigative features. Values found in this column are based on Table B-4.

- **Risk Bin Number.** Assigns a risk number based on the frequency, the consequences, and the receptor. Values found in this column are based on Table B-5.

- **Defense-in-Depth Controls.** Lists the key preventative and mitigative features used to provide a Defense-in-Depth to minimize the occurrence and/or occurrence of the identified hazard.

B.2.3 Hazard Evaluation Results. The hazard analysis results were recorded and transmitted in a letter report (Kelly 1996) which is included as an attachment to this section of the addendum. Attachment 1 to this report is the same as Tables A-1 in the previous section of this addendum and Tables B-3 through B-6 of this addendum. Attachment 2, "Hazard Summary Table," is found in Table B-1 of this section.

Table B-1. Hazards Analysis Summary. (30 sheets)

Event No.	Event Category	Postulated Event Description	Significant Causes or Energy Sources	Receptor	Credited Prevention (Attributes that Lower Frequency)	Event Frequency		Credited Mitigation (Attributes that Lower Consequences)	Consequences		Risk Bin Number		Defense-in-Depth Controls
						Without Prevent	With Prevent		Without Mitigat	With Mitigat	Without Prevent Mitigat	With Prevent Mitigat	
Hazard - Radiological and toxicological material in the ventilation process stream and exhaust stream													
1	E-7	Process vapor release to the atmosphere due to ducting failure, drain line failure, seal pot failure, etc.	Seismic event	Public	Engineered Features: - Double encase piping - Seismic design of system is SC-2 Administrative Features: - None identified	F2	F1	Engineered Features: - Double encased ducting Administrative Features: - None Identified	S0	S0	4	2	- Hardened building
				Co-located Worker	- Same as for the public			- Same as for the public	S0	S0	4	2	- Same as for the public
				Immediate Worker	- Same as for the public			- Same as for the public	S1	S1	8	5	- Same as for the public
				Rationale for frequency of event: Seismic event at the Hanford Site has a frequency of F2 Potential for contamination of the environment: E0, slight to negligible									
2	E-7	Process condensate release to the soil due to ducting failure, drain line failure, seal pot failure, etc.	Seismic event	Public	Engineered Features: - Double encased piping - Seismic design of system is SC-2 Administrative Features: - None identified	F2	F1	Engineered Features: - Double encased ducting Administrative Features: - Alarm response procedures	S0	S0	4	2	- Sloped ducting to drain to tank or sump - Pipe annulus liquid monitoring - Hardened building
				Co-located Worker	- Same as for the public			- Same as for the public	S0	S0	4	2	- Same as for the public
				Immediate Worker	- Same as for the public			- Same as for the public	S0	S0	4	2	- Same as for the public
				Rationale for frequency of event: Seismic event at the Hanford Site has a frequency of F2 Potential for contamination of the environment: E0, slight to negligible									

Table B-1. Hazards Analysis Summary. (30 sheets)

Event No.	Event Category	Postulated Event Description	Significant Causes or Energy Sources	Receptor	Credited Prevention (Attributes that Lower Frequency)	Event Frequency		Credited Mitigation (Attributes that Lower Consequences)	Consequences		Risk Bin Number		Defense-in-Depth Controls
						Without Prevent	With Prevent		Without Mitigat	With Mitigat	Without Prevent Mitigat	With Prevent Mitigat	
Hazard – Radiological and toxicological material in the ventilation process stream and exhaust stream													
3	E-7	Process condensate release to the soil due to ducting failure, drain line failure, seal pot failure, etc.	Tornado Tornado generated missiles High winds	Public	Engineered Features: - Building hardened to SC-2 winds (80 mph) - Lines buried 2.4 m (8 ft) deep - Double encased ducting Administrative Features: - Emergency response procedures - Tie down (AC)	F2	F1	Engineered Features: - Double encased ducting - Hardened building Administrative Features: - Emergency response procedures	S0	S0	4	2	- Cathodic protection
				Co-located Worker	- Same as for the public			- Same as for the public	S0	S0	4	2	- Same as for the public
				Immediate Worker	- Same as for the public			- Same as for the public	S0	S0	4	2	- Same as for the public
				Rationale for frequency of event: Tornado/high wind event at the Hanford Site has a frequency of F2 Potential for contamination of the environment: E0, slight to negligible									
Hazard – Radiological and toxicological material in the ventilation process stream and exhaust stream													
4	E-7	Process vapor release to the atmosphere due to ducting failure, drain line failure, seal pot failure, etc.	Tornado Tornado generated missiles High winds	Public	Engineered Features: - Building hardened to SC-2 winds (80 mph) - Lines buried 2.4 m (8 ft) deep - Double encased ducting Administrative Features: - Emergency response procedures - Tie down (AC)	F2	F1	Engineered Features: - Double encased ducting Administrative Features: - Emergency response procedures	S0	S0	4	2	- Cathodic protection
				Co-located Worker	- Same as for the public			- Same as for the public	S0	S0	4	2	- Same as for the public
				Immediate Worker	- Same as for the public			- Same as for the public	S1	S1	8	5	- Same as for the public
				Rationale for frequency of event: Tornado/high wind event at the Hanford Site has a frequency of F2 Potential for contamination of the environment: E0, slight to negligible									

Table B-1. Hazards Analysis Summary. (30 sheets)

Event No.	Event Category	Postulated Event Description	Significant Causes or Energy Sources	Receptor	Credited Prevention (Attributes that Lower Frequency)	Event Frequency		Credited Mitigation (Attributes that Lower Consequences)	Consequences		Risk Bin Number		Defense-in-Depth Controls
						Without Prevent	With Prevent		Without Mitigat	With Mitigat	Without Prevent Mitigat	With Prevent Mitigat	
Hazard - Radiological and toxicological material in the ventilation process stream and exhaust stream													
5	E-7	Process condensate release to the soil due to ducting failure, drain line failure, seal pot failure, etc.	Other externally generated missiles (e.g., compressed gas cylinders during maintenance or construction, falling light poles, etc.)	Public	Engineered Features: - Ducting is double encased - Ducting is buried - Hardened facility Administrative Features: - Emergency response procedure	F2	F1	Engineered Features: - Ducting is double encased Administrative Features: - Emergency response procedure	S0	S0	4	2	- All lines are sloped to tank or sump - Ducting is schedule 40 pipe - Ducting is SC-2
				Co-located Worker	- Same as for the public			- Same as for the public	S0	S0	4	2	- Same as for the public
				Immediate Worker	- Same as for the public			- Same as for the public	S0	S0	4	2	- Same as for the public
				Rationale for frequency of event: Compressed gas is used only during maintenance and other maintenance activities give a frequency of F2 Potential for contamination of the environment: E0, slight to negligible									

Table B-1. Hazards Analysis Summary. (30 sheets)

Event No.	Event Category	Postulated Event Description	Significant Causes or Energy Sources	Receptor	Credited Prevention (Attributes that Lower Frequency)	Event Frequency		Credited Mitigation (Attributes that Lower Consequences)	Consequences		Risk Bin Number		Defense-in-Depth Controls
						Without Prevent	With Prevent		Without Mitigat	With Mitigat	Without Prevent Mitigat	With Prevent Mitigat	
Hazard – Radiological and toxicological material in the ventilation process stream and exhaust stream													
6	E-7	Process vapor release to the atmosphere due to ducting failure, drain line failure, seal pot failure, etc.	Other externally generated missiles (e.g., compressed gas cylinders during maintenance or construction, falling light poles, etc.)	Public	Engineered Features: - Ducting is double encased - Ducting is buried - Hardened facility - Ducting is schedule 40 pipe - Ducting is SC-2 Administrative Features: - Emergency response procedure	F2	F1	Engineered Features: - Ducting is double encased Administrative Features: - None identified	S0	S0	4	2	- Ducting is schedule 40 pipe - Ducting is SC-2
				Co-located Worker	- Same as for the public			- Same as for the public	S0	S0	4	2	Same as for the public
				Immediate Worker	- Same as for the public			- Same as for the public	S1	S1	8	5	Same as for the public
				Rationale for frequency of event: Compressed gas is used only during maintenance and other maintenance activities give a frequency of F2 Potential for contamination of the environment: E0, slight to negligible									
Hazard – Radiological and toxicological material in the ventilation process stream and exhaust stream													
7	E-3	Process condensate release to the soil due to ducting failure, drain line failure, seal pot failure, etc.	Corrosion of ducting, weld cracks, etc.	Public	Engineered Features: - Cathodic protection - Stainless steel piping Administrative Features: - Initial weld inspections - Initial pressure testing	F3	F2	Engineered Features: - Double encased piping - Pipe annulus monitoring Administrative Features: - Alarm response procedure	S0	S0	7	4	- All lines are sloped back to tank or sump
				Co-Located Worker	- Same as for the public			- Same as for the public	S0	S0	7	4	- Same as for the public
				Immediate Worker	- Same as for the public			- Same as for the public	S0	S0	7	4	- Same as for the public
				Rationale for frequency of event: Corrosion is anticipated to significantly degrade the piping (without prevention or mitigation) during the life of the facility; this makes it a frequency of F3 Potential for contamination of the environment: E0, slight to negligible									

Table B-1. Hazards Analysis Summary. (30 sheets)

Event No.	Event Category	Postulated Event Description	Significant Causes or Energy Sources	Receptor	Credited Prevention (Attributes that Lower Frequency)	Event Frequency		Credited Mitigation (Attributes that Lower Consequences)	Consequences		Risk Bin Number		Defense-in-Depth Controls
						Without Prevent	With Prevent		Without Mitigat	With Mitigat	Without Prevent Mitigat	With Prevent Mitigat	
8	E-3	Process vapor release to the atmosphere due to ducting failure, drain line failure, seal pot failure, etc.	Corrosion of ducting, weld cracks, etc.	Public	Engineered Features: - Cathodic protection - Stainless steel piping Administrative Features: - Initial weld inspections	F3	F2	Engineered Features: - Pipe annulus monitoring Administrative Features: - None identified	S0	S0	7	4	- Double encased piping - Initial pressure testing
				Co-located Worker	- Same as for the public			- Same as for the public	S0	S0	7	4	- Same as for the public
				Immediate Worker	- Same as for the public			- Same as for the public	S1	S1	11	8	- Same as for the public
				Rationale for frequency of event: Corrosion is anticipated to significantly degrade the piping (without prevention or mitigation) during the life of the facility; this makes it a frequency of F3 Potential for contamination of the environment: E0, slight to negligible								

Table B-1. Hazards Analysis Summary. (30 sheets)

Event No.	Event Category	Postulated Event Description	Significant Causes or Energy Sources	Receptor	Credited Prevention (Attributes that Lower Frequency)	Event Frequency		Credited Mitigation (Attributes that Lower Consequences)	Consequences		Risk Bin Number		Defense-in-Depth Controls
						Without Prevent	With Prevent		Without Mitigat	With Mitigat	Without Prevent Mitigat	With Prevent Mitigat	
Hazard - Radiological and toxicological material in the process stream and exhaust stream													
9	E-3	Process condensate release to the soil due to ducting failure, drain line failure, seal pot failure, etc.	Fatigue failure resulting from thermal cycling, excessive vibration, etc.	Public	Engineered Features: - Vibration isolators at the fan/duct interface - Ducting is double encased - Stainless steel - Thrust blocks - Expansion loops - Controlled density fill around ducting - Ducting buried 2.4 m (8 ft) Administrative Features: - Heavy equipment permit required in tank farms (AC) - Survey made for paths of heavy equipment - Metal plates used when driving over existing lines	F3	F2	Engineered Features: - Double encased piping Administrative Features: - Alarm response procedures	SO	SO	7	4	- Pipe annulus liquid monitoring - Lines designed to 97 °C (206 °F) - All lines are sloped to tank or sump
				Co-located Worker	- Same as for the public			- Same as for the public	SO	SO	7	4	- Same as for the public
				Immediate Worker	- Same as for the public			- Same as for the public	SO	SO	7	4	- Same as for the public
				Rationale for frequency of event: Thermal cycling of the piping is anticipated to significantly degrade the piping (without prevention or mitigation) during the life of the facility; this makes it a frequency of F3 Potential for contamination of the environment: E0, slight to negligible									

Table B-1. Hazards Analysis Summary. (30 sheets)

Event No.	Event Category	Postulated Event Description	Significant Causes or Energy Sources	Receptor	Credited Prevention (Attributes that Lower Frequency)	Event Frequency		Credited Mitigation (Attributes that Lower Consequences)	Consequences		Risk Bin Number		Defense-in-Depth Controls
						Without Prevent	With Prevent		Without Mitigat	With Mitigat	Without Prevent Mitigat	With Prevent Mitigat	
Hazard - Radiological and toxicological material in the process stream and exhaust stream													
10	E-3	Process vapor release to the atmosphere due to ducting failure, drain line failure, seal pot failure, etc.	Fatigue failure resulting from thermal cycling, excessive vibration, etc.	Public	Engineered Features: - Vibration isolators at the fan/duct interface - Ducting is double encased - Stainless steel - Thrust blocks - Expansion loops - Controlled density fill around ducting - Ducting buried 2.4 m (8 ft) Administrative Features: - Heavy equipment permit required in tank farms (AC) - Survey made for paths of heavy equipment - Metal plates used when driving over existing lines	F3	F2	Engineered Features: - Double encased piping Administrative Features: - Alarm response procedures	S0	S0	7	4	- Pipe annulus liquid monitoring - Lines designed to 97 °C (206 °F)
				Co-located Worker	- Same as for the public			- Same as for the public	S0	S0	7	4	- Same as for the public
				Immediate Worker	- Same as for the public			- Same as for the public	S1	S1	11	8	- Same as for the public
				Rationale for frequency of event: Thermal cycling of the piping is anticipated to significantly degrade the piping (without prevention or mitigation) during the life of the facility; this makes it a frequency of F3 Potential for contamination of the environment: E0, slight to negligible									

Table B-1. Hazards Analysis Summary. (30 sheets)

Event No.	Event Category	Postulated Event Description	Significant Causes or Energy Sources	Receptor	Credited Prevention (Attributes that Lower Frequency)	Event Frequency		Credited Mitigation (Attributes that Lower Consequences)	Consequences		Risk Bin Number		Defense-in-Depth Controls
						Without Prevent	With Prevent		Without Mitigat	With Mitigat	Without Prevent Mitigat	With Prevent Mitigat	
Hazard - Radiological and toxicological material in the process stream and exhaust stream													
11	E-3	Process condensate release to the soil due to ducting failure, drain line failure, seal pot failure, etc.	Internally generated missiles from recirculating fan blade failure.	Public	Engineered Features: - Centrifugal fans - Modules contain missiles (but not sealed) Administrative Features: - Maintenance	F3	F2	Engineered Features: - None Identified Administrative Features: - None Identified	S0	S0	7	4	- Periodic inspection would hear bearing noise - All lines are sloped to tank or sump
				Co-located Worker	- Same as for the public			- Same as for the public	S0	S0	7	4	Same as for the public
				Immediate Worker	- Same as for the public			- Same as for the public	S0	S0	7	4	Same as for the public
				Rationale for frequency of event: Fan blade failure rate makes this event a frequency of F3 Potential for contamination of the environment: E0, slight to negligible								
12	E-3	Process vapor release to the atmosphere due to ducting failure, drain line failure, seal pot failure, etc.	Internally generated missiles from main ventilation system exhaust fan blade failure.	Public	Engineered Features: - Centrifugal fans - Main ventilation system fan is located in a hardened room Administrative Features: - Maintenance	F3	F2	Engineered Features: - None Identified Administrative Features: - None Identified	S0	S0	7	4	- Periodic inspection would hear bearing noise
				Co-located Worker	- Same as for the public			- Same as for the public	S0	S0	7	4	- Same as for the public
				Immediate Worker	- Same as for the public			- Same as for the public	S1	S1	11	8	- Same as for the public
				Rationale for frequency of event: Fan blade failure rate makes this event a frequency of F3 Potential for contamination of the environment: E0, slight to negligible									

Table B-1. Hazards Analysis Summary. (30 sheets)

Event No.	Event Category	Postulated Event Description	Significant Causes or Energy Sources	Receptor	Credited Prevention (Attributes that Lower Frequency)	Event Frequency		Credited Mitigation (Attributes that Lower Consequences)	Consequences		Risk Bin Number		Defense-in-Depth Controls
						Without Prevent	With Prevent		Without Mitigat	With Mitigat	Without Prevent Mitigat	With Prevent Mitigat	
Hazard - Radiological and toxicological material in the process stream and exhaust stream													
13	E-6	Process condensate release to the soil due to ducting failure, drain line failure, seal pot failure, etc.	Ventilation system overburden (external loading)	Public	Engineered Features: - Control density fill - Double encased ducting Administrative Features: - Excavation permit required (AC 5.24) - Dome loading limited (AC 5.22) - Shift manager controls vehicle access/route for heavy equipment	F3	F2	Engineered Features: - Double encased ducting Administrative Features: - None Identified	S0	S0	7	4	- Ducting buried 8 ft deep - All lines are sloped to tank or sump
		Process vapor release to the atmosphere due to ducting failure, drain line failure, seal pot failure, etc.		Co-located Worker	- Same as for the public			- Same as for the public	S0	S0	7	4	- Same as for the public
				Immediate Worker	- Same as for the public			- Same as for the public	S0	S0	7	4	- Same as for the public
				Rationale for frequency of event: The frequency of heavy equipment moving within tank farms makes this event an F3 Potential for contamination of the environment: E0, slight to negligible									

Table B-1. Hazards Analysis Summary. (30 sheets)

Event No.	Event Category	Postulated Event Description	Significant Causes or Energy Sources	Receptor	Credited Prevention (Attributes that Lower Frequency)	Event Frequency		Credited Mitigation (Attributes that Lower Consequences)	Consequences		Risk Bin Number		Defense-in-Depth Controls
						Without Prevent	With Prevent		Without Mitigat	With Mitigat	Without Prevent Mitigat	With Prevent Mitigat	
14	E-6		Ventilation system overburden (external loading)	Public	Engineered Features: - Control density fill - Double encased ducting Administrative Features: - Excavation permit required (AC 5.24) - Dome loading limited (AC 5.22) - Shift manager controls vehicle access/route for heavy equipment	F3	F2	Engineered Features: - Double encased ducting Administrative Features: - None Identified	S0	S0	7	4	- Ducting buried 2.4 m (8 ft) deep
				Co-located Worker	- Same as for the public			- Same as for the public	S0	S0	7	4	- Same as for the public
				Immediate Worker	- Same as for the public			- Same as for the public	S1	S1	11	8	- Same as for the public
				Rationale for frequency of event: The frequency of heavy equipment moving within tank farms makes this event an F3 Potential for contamination of the environment: E0, slight to negligible									
Hazard - Radiological and toxicological material in the process stream and exhaust stream													
15	E-6	Process condensate release to the soil due to ducting failure, drain line failure, seal pot failure, etc.	External dropped equipment	Public	Engineered Features: - Hardened aboveground - Double encased Administrative Features: - Major lifts require a USQ screening - AC/procedure on all lifts	F3	F2	Engineered Features: Administrative Features:	S0	S0	7	4	- Ducting buried 2.4 m (8 ft) - Double encased lines - All lines are sloped to tank or sump
				Co-located Worker	- Same as for the public			- Same as for the public	S0	S0	7	4	- Same as for the public
				Immediate Worker	- Same as for the public			- Same as for the public	S0	S0	7	4	- Same as for the public
				Rationale for frequency of event: The frequency of crane operations and heavy lifts within tank farms makes this event an F3 Potential for contamination of the environment: E0, slight to negligible									

Table B-1. Hazards Analysis Summary. (30 sheets)

Event No.	Event Category	Postulated Event Description	Significant Causes or Energy Sources	Receptor	Credited Prevention (Attributes that Lower Frequency)	Event Frequency		Credited Mitigation (Attributes that Lower Consequences)	Consequences		Risk Bin Number		Defense-in-Depth Controls
						Without Prevent	With Prevent		Without Mitigat	With Mitigat	Without Prevent Mitigat	With Prevent Mitigat	
16	E-6	Process vapor release to the atmosphere due to ducting failure, drain line failure, seal pot failure, etc.	External dropped equipment	Public	Engineered Features: - Hardened aboveground - Double encased Administrative Features: - Major lifts require a USQ screening - AC/procedures on all lifts	F3	F2	Engineered Features: - None Identified Administrative Features: - None Identified	S0	S0	7	4	- Ducting buried 2.4 m (8 ft)
				Co-located Worker	- Same as for the public			- Same as for the public	S0	S0	7	4	- Same as for the public
				Immediate Worker	- Same as for the public			- Same as for the public	S1	S1	11	8	- Same as for the public
				Rationale for frequency of event: The frequency of crane operations and heavy lifts within tank farms makes this event an F3 Potential for contamination of the environment: E0, slight to negligible									
Hazard – Radiological and toxicological material in the ventilation process stream and exhaust stream													
17	E-6	Process condensate release to the soil due to ducting failure, drain line failure, seal pot failure, etc.	Excavation operations	Public	Engineered Features: None Identified Administrative Features: - AC 5.24, Excavation permit program - HNF-IP-0842[1] manual requires hand digging - HNF-IP-0842[1] manual requires scanning the area before digging - RCT and PIC present during activity and	F3	F2	Engineered Features: - None Identified Administrative Features: - None Identified	S0	S0	7	4	- Ducting buried 2.4 m (8 ft) - Yellow tape marker has been placed 0.6 m (2 ft) above ducting - All lines are sloped to tank or sump - Ducting is located inside fence
				Co-located Worker	- Same as for the public			- Same as for the public	S0	S0	7	4	- Same as for the public
				Immediate Worker	- Same as for the public			- Same as for the public	S0	S0	7	4	- Same as for the public
				Rationale for frequency of event: The frequency of excavations in tank farms makes this event an F3 Potential for contamination of the environment: E0, slight to negligible									

Table B-1. Hazards Analysis Summary. (30 sheets)

Event No.	Event Category	Postulated Event Description	Significant Causes or Energy Sources	Receptor	Credited Prevention (Attributes that Lower Frequency)	Event Frequency		Credited Mitigation (Attributes that Lower Consequences)	Consequences		Risk Bin Number		Defense-in-Depth Controls
						Without Prevent	With Prevent		Without Mitigat	With Mitigat	Without Prevent Mitigat	With Prevent Mitigat	
Hazard - Radiological and toxicological material in the ventilation process stream and exhaust stream													
18	E-6	Process vapor release to the atmosphere due to ducting failure, drain line failure, seal pot failure, etc.	Excavation operations	Public	Engineered Features: None Identified Administrative Features: - AC 5.24, Excavation permit program - HNF-IP-0842[1] manual requires hand digging - HNF-IP-0842[1] manual requires scanning the area before digging - RCT and PIC present during activity and	F3	F2	Engineered Features: - None Identified Administrative Features: - None Identified	S0	S0	7	4	- Ducting buried 2.4 m (8 ft) - Yellow tape marker has been place 0.6 m (2 ft) above ducting
				Co-located Worker	- Same as for the public			- Same as for the public	S0	S0	7	4	- Same as for the public
				Immediate Worker	- Same as for the public			- Same as for the public	S1	S1	11	8	- Same as for the public
				Rationale for frequency of event: The frequency of excavations in tank farms makes this event an F3 Potential for contamination of the environment: E0, slight to negligible									
19	E-6	Process condensate release to the soil due to ducting failure, drain line failure, seal pot failure, etc.	Ground creep and movement	Public	Engineered features: - Controlled density fill - Expansion loops Administrative Features: - None identified.	F3	F2	Engineered Features: - None identified. Administrative Features: - None identified.	S0	S0	7	4	- All lines are sloped to tank or sump - Double encased ducting
				Co-located Worker	- Same as for the public			- Same as for the public	S0	S0	7	4	- Same as for the public
				Immediate Worker	- Same as for the public			- Same as for the public	S0	S0	7	4	- Same as for the public
				Rationale for frequency of event: The frequency of ground movement or ground creep makes this event an F3 Potential for contamination of the environment: E0, slight to negligible									

Table B-1. Hazards Analysis Summary. (30 sheets)

Event No.	Event Category	Postulated Event Description	Significant Causes or Energy Sources	Receptor	Credited Prevention (Attributes that Lower Frequency)	Event Frequency		Credited Mitigation (Attributes that Lower Consequences)	Consequences		Risk Bin Number		Defense-in-Depth Controls
						Without Prevent	With Prevent		Without Mitigat	With Mitigat	Without Prevent Mitigat	With Prevent Mitigat	
Hazard – Radiological and toxicological material in the ventilation process stream and exhaust stream													
20	E-6	Process vapor release to the atmosphere due to ducting failure, drain line failure, seal pot failure, etc.	Ground creep and movement	Public	Engineered Features: - Controlled density fill - Expansion loops Administrative Features: - None identified	F3	F2	Engineered Features: - None identified. Administrative Features: - None identified.	S0	S0	7	4	- Double encased ducting
				Co-located Worker	- Same as for the public			- Same as for the public	S0	S0	7	4	- Same as for the public
				Immediate Worker	- Same as for the public			- Same as for the public	S1	S1	11	8	- Same as for the public
				Rationale for frequency of event: The frequency of ground movement or ground creep makes this event an F3 Potential for contamination of the environment: E0, slight to negligible									
Hazard – Radiological and toxicological material in the ventilation process stream and exhaust stream													
21	E-6	Process condensate release to the soil due to ducting failure, drain line failure, seal pot failure, etc.	Vehicular collision with above grade ventilation system components	Public	Engineered Features: - Hardened facility - Recirculation modules Administrative Features: - Spotter required for vehicles backing up within tank farms	F3	F2	Engineered Features: - None identified. Administrative Features: - None identified.	S0	S0	7	4	- All lines are sloped to tank or sump - Components are not readily vulnerable
				Co-located Worker	- Same as for the public			- Same as for the public	S0	S0	7	4	- Same as for the public
				Immediate Worker	- Same as for the public			- Same as for the public	S0	S0	7	4	- Same as for the public
				Rationale for frequency of event: The frequency of vehicular operation within tank farms makes this event an F3 Potential for contamination of the environment: E0, slight to negligible									

Table B-1. Hazards Analysis Summary. (30 sheets)

Event No.	Event Category	Postulated Event Description	Significant Causes or Energy Sources	Receptor	Credited Prevention (Attributes that Lower Frequency)	Event Frequency		Credited Mitigation (Attributes that Lower Consequences)	Consequences		Risk Bin Number		Defense-in-Depth Controls
						Without Prevent	With Prevent		Without Mitigat	With Mitigat	Without Prevent Mitigat	With Prevent Mitigat	
22	E-6	Process vapor release to the atmosphere due to ducting failure, drain line failure, seal pot failure, etc.	Vehicular collision with above grade ventilation system components	Public	Engineered Features: - Hardened facility - Recirculation modules Administrative Features: - Spotter required for vehicles backing up within tank farms	F3	F2	Engineered Features: - None Identified Administrative Features: - None Identified	S0	S0	7	4	- Components are not readily vulnerable
				Co-located Worker	- Same as for the public			- Same as for the public	S0	S0	7	4	- Same as for the public
				Immediate Worker	- Same as for the public			- Same as for the public	S1	S1	11	8	- Same as for the public
				Rationale for frequency of event: The frequency of vehicular operation within tank farms makes this event an F3 Potential for contamination of the environment: E0, slight to negligible									
Hazard – Radiological and toxicological material in the ventilation process stream and exhaust stream													
23	E-6	Process condensate release to the soil due to ducting failure, drain line failure, seal pot failure, etc.	Freezing and thawing of ventilation system components that contain liquid	Public	Engineered Features: - Components have drains - Seal loops below frost line Administrative Features: - Freeze protection/ winterization procedure	F3	F3	Engineered Features: Administrative Features: - Freeze protection plan for AWF	S0	S0	7	4	- Sloped ducting back to sump/tank - Double encased - Electric heaters - Can by-pass condenser and/or HEME - Airflow from condenser limits exit temperature to 1 °C (34 °F)
				Co-located Worker	- Same as for the public			- Same as for the public	S0	S0	7	4	- Same as for public
				Immediate Worker	- Same as for the public			- Same as for the public	S0	S0	7	4	- Same as for public
				Rationale for frequency of event: The frequency of freezing weather conditions on the Hanford Site makes this event an F3 Potential for contamination of the environment: E0, slight to negligible									

Table B-1. Hazards Analysis Summary. (30 sheets)

Event No.	Event Category	Postulated Event Description	Significant Causes or Energy Sources	Receptor	Credited Prevention (Attributes that Lower Frequency)	Event Frequency		Credited Mitigation (Attributes that Lower Consequences)	Consequences		Risk Bin Number		Defense-in-Depth Controls
						Without Prevent	With Prevent		Without Mitigat	With Mitigat	Without Prevent Mitigat	With Prevent Mitigat	
Hazard – Radiological and toxicological material in the ventilation process stream and exhaust stream													
24	E-6	Process vapor release to the atmosphere due to ducting failure, drain line failure, seal pot failure, etc.	Freezing and thawing of ventilation systems that contain liquid	Public	Engineered Features: - Components have drains - Seal loops below frost line Administrative Features: - Freeze protection/ winterization procedure - Freeze protection plan for AWF	F3	F3	Engineered Features: None Identified Administrative Features: - Freeze protection plan for AWF	S0	S0	7	7	- Double encased ducting - Electric heaters - Can by-pass condenser and/or HEME - Airflow exit temperature limited to 1 °C (34 °F)
				Co-located Worker	- Same as for the public			- Same as for the public	S0	S0	7	7	- Same as for the public
				Immediate Worker	- Same as for the public			- Same as for the public	S1	S1	11	11	- Same as for the public
				Rationale for frequency of event: The frequency of freezing weather conditions on the Hanford Site makes this event an F3 Potential for contamination of the environment: E0, slight to negligible									
Hazard – Radiological and toxicological in the tank													
25	E-3	Release of radiological material due to Tank Bump	Loss of tank cooling due to failure of the tank recirculation system fan	Public	Engineered Features: - Exhaust system fans - Air lift circulators - Main ventilation system has backup Administrative Features: - Shut off heat generating equipment (mixer pumps, etc.) - Temperature monitoring	F3	F2	Engineered Features: - None identified Administrative Features: - AC 5.19, Tank heat load limit	S3	S3	16	15	- Annulus ventilation system available - Ancillary exhaust connectors available - Cooling provided by main ventilation system
				Co-located Worker	- Same as for the public			- Same as for the public	S3	S3	16	15	- Same as for the public
				Immediate Worker	- Same as for the public			- Same as for the public	S3	S3	16	15	- Same as for the public
				Rationale for frequency of event: The frequency of fan failures makes this event an F3 Potential for contamination of the environment: E3									

Table B-1. Hazards Analysis Summary. (30 sheets)

Event No.	Event Category	Postulated Event Description	Significant Causes or Energy Sources	Receptor	Credited Prevention (Attributes that Lower Frequency)	Event Frequency		Credited Mitigation (Attributes that Lower Consequences)	Consequences		Risk Bin Number		Defense-in-Depth Controls
						Without Prevent	With Prevent		Without Mitigat	With Mitigat	Without Prevent Mitigat	With Prevent Mitigat	
Hazard - Radiological and toxicological material in the tank													
26	E-3	Release of radiological material due to Tank Bump	Loss of ventilation due to failure of one of the main ventilation system fans	Public	Engineered Features: - Redundant ventilation trains Administrative Features: - Time to repair	F3	F2	Engineered Features: Administrative Features: - AC 5.19, Tank heat load limit	S3	S3	16	15	- Electrical backup - Redundant fans - Ancillary exhaust connectors - Main ventilation systems (primary and backup) are separately located - Manual settings of system can be made - ALC operation available
				Co-located Worker	- Same as for the public			- Same as for the public	S3	S3	16	15	- Same as for the public
				Immediate Worker	- Same as for the public			- Same as for the public	S3	S3	16	15	- Same as for the public
				Rationale for frequency of event: The frequency of fan failures makes this event an F3 Potential for contamination of the environment: E3									

Table B-1. Hazards Analysis Summary. (30 sheets)

Event No.	Event Category	Postulated Event Description	Significant Causes or Energy Sources	Receptor	Credited Prevention (Attributes that Lower Frequency)	Event Frequency		Credited Mitigation (Attributes that Lower Consequences)	Consequences		Risk Bin Number		Defense-in-Depth Controls
						Without Prevent	With Prevent		Without Mitigat	With Mitigat	Without Prevent Mitigat	With Prevent Mitigat	
Hazard - Radiological and toxicological material in the tank													
27	E-3	Release of radiological material due to Tank Bump	Loss of ventilation due to failure of both of the main ventilation system fans	Public	Engineered Features: - Scenario requires two independent failures (redundant ventilation trains) Administrative Features: - Temperature monitoring	F2	F1	Engineered Features: - None Identified Administrative Features: - AC 5.19, Tank heat load limit	S3	S3	15	13	- Standby diesel generator provides electrical power - Main ventilation systems (primary and backup) are separately located - Ancillary ventilation connector - Days or weeks available to respond before Tank Bump occurs - ALC operation available
				Co-located Worker	- Same as for the public			- Same as for the public	S3	S3	15	13	- Same as for the public
				Immediate Worker	- Same as for the public			- Same as for the public	S3	S3	15	13	- Same as for the public
				Rationale for frequency of event: The frequency of two fan failures makes this event an F2 Potential for contamination of the environment: E3									

Table B-1. Hazards Analysis Summary. (30 sheets)

Event No.	Event Category	Postulated Event Description	Significant Causes or Energy Sources	Receptor	Credited Prevention (Attributes that Lower Frequency)	Event Frequency		Credited Mitigation (Attributes that Lower Consequences)	Consequences		Risk Bin Number		Defense-in-Depth Controls
						Without Prevent	With Prevent		Without Mitigat	With Mitigat	Without Prevent Mitigat	With Prevent Mitigat	
Hazard — Radiological and toxicological material in the tank													
28	E-3	Release of radiological material due to Tank Bump	Loss of ventilation due to loss of AC power	Public	Engineered Features: - Standby diesel generator Administrative Features: - None identified	F3	F2	Engineered Features: - None identified Administrative Features: - AC 5.19, Tank heat load limit	S3	S3	16	15	- Standby diesel generator provides electrical power - Main ventilation systems (primary and backup) are separately located - Ancillary ventilation connector - Days or weeks available to respond before Tank Bump occurs - ALC operation available
				Co-located Worker	- Same as for the public			- Same as for the public	S3	S3	16	15	- Same as for the public
				Immediate Worker	- Same as for the public			- Same as for the public	S3	S3	16	15	- Same as for the public
				Rationale for frequency of event: The frequency of loss of AC power has a frequency of F3 Potential for contamination of the environment: E3									

Table B-1. Hazards Analysis Summary. (30 sheets)

Event No.	Event Category	Postulated Event Description	Significant Causes or Energy Sources	Receptor	Credited Prevention (Attributes that Lower Frequency)	Event Frequency		Credited Mitigation (Attributes that Lower Consequences)	Consequences		Risk Bin Number		Defense-in-Depth Controls
						Without Prevent	With Prevent		Without Mitigat	With Mitigat	Without Prevent Mitigat	With Prevent Mitigat	
Hazard – Radiological and toxicological material in the tank													
29	E-3	Release of radiological material due to Tank Bump	Loss of ventilation due to blockage of the tank inlet breather	Public	Engineered Features: - Pressure monitoring system Administrative Features: - Temperature monitoring - AC for pressure drop across inlet breather (OSD limit) - Temperature monitoring - Flow monitoring (for low flow) - Alarm response procedure)	F3	F2	Engineered Features: - None Identified Administrative Features: - AC 5.19, Tank heat load limits	S3	S3	16	15	- Air lift circulators available - Vacuum relief valve is set at -1.5 kPa (6 in. w.g.) - Recirculation system can maintain waste temperature - Heaters protect filters from freezing
				Co-located Worker	- Same as for the public			- Same as for the public	S3	S3	16	15	- Same as for the public
				Immediate Worker	- Same as for the public			- Same as for the public	S3	S3	16	15	- Same as for the public
				Rationale for frequency of event: Total blockage of the inlet breather (ice, tumbleweed, plastic bag, particulate build-up, or other means) is expected to occur during the life of the facility; this makes the event frequency an F3 Potential for contamination of the environment: E3								

Table B-1. Hazards Analysis Summary. (30 sheets)

Event No.	Event Category	Postulated Event Description	Significant Causes or Energy Sources	Receptor	Credited Prevention (Attributes that Lower Frequency)	Event Frequency		Credited Mitigation (Attributes that Lower Consequences)	Consequences		Risk Bin Number		Defense-in-Depth Controls
						Without Prevent	With Prevent		Without Mitigat	With Mitigat	Without Prevent Mitigat	With Prevent Mitigat	
30	E-3	Release of radiological material due to Tank Bump	Loss of ventilation due to blockage of the exhaust system HEME	Public	Engineered Features: - Seal pot has level alarm - HEME can be bypassed Administrative Features: - Pressure drop tested periodically across HEME	F3	F2	Engineered Features: - None identified Administrative Features: - AC 5.19, Tank heat load limit	S3	S3	16	15	- HEME has capability of being replaced (modular) - Temperature monitoring of waste - Water spray prevent HEME filter from drying out - ALC operation available
				Co-located Worker	- Same as for the public			- Same as for the public	S3	S3	16	15	- Same as for the public
				Immediate Worker	- Same as for the public			- Same as for the public	S3	S3	16	15	- Same as for the public
				Rationale for frequency of event: Total blockage of the HEME (particulate build-up) and without prevention or mitigation is expected to occur during the life of the facility; this makes the event frequency an F3 Potential for contamination of the environment: E3									
31	E-3	Release of radiological material due to Tank Bump	Loss of ventilation due to blockage of the exhaust system HEPA/HEGA filters	Public	Engineered Features: - Redundant ventilation train - High pressure drop across filters switches systems Administrative Features: - High pressure drop across HEPA/HEGA - Temperature monitoring - Alarm response procedures	F3	F2	Engineered Features: - None Identified Administrative Features: - AC 5.19, Tank heat load limit	S3	S3	16	15	- Temperature monitoring of waste - 200 mrem/h maximum filter loading (800 mrem/h for HEME) - ALC operation available
				Co-located Worker	- Same as for the public			- Same as for the public	S3	S3	16	15	- Same as for the public
				Immediate Worker	- Same as for the public			- Same as for the public	S3	S3	16	15	- Same as for the public
				Rationale for frequency of event: Total blockage of the HEPA/HEGA (particulate build-up) and without prevention or mitigation is expected to occur during the life of the facility; this makes the event frequency an F3 Potential for contamination of the environment: E3									

Table B-1. Hazards Analysis Summary. (30 sheets)

Event No.	Event Category	Postulated Event Description	Significant Causes or Energy Sources	Receptor	Credited Prevention (Attributes that Lower Frequency)	Event Frequency		Credited Mitigation (Attributes that Lower Consequences)	Consequences		Risk Bin Number		Defense-in-Depth Controls
						Without Prevent	With Prevent		Without Mitigat	With Mitigat	Without Prevent Mitigat	With Prevent Mitigat	
Hazard – Radiological and toxicological material in the tank													
32	E-3	Release of radiological material due to Tank Bump	Loss of ventilation due to failure of the seal pot allowing water to back up to HEME and/or exhaust system condenser	Public	Engineered Features: - Liquid level probes (high and low levels) Administrative Features: - Alarm response procedures	F3	F2	Engineered Features: - None identified Administrative Features: - AC 5.19 Tank heat load limit	S3	S3	16	15	- Temperature monitoring - Time available for maintenance response - ALC operation available
				Co-located Worker	- Same as for the public			- Same as for the public	S3	S3	16	15	- Same as for the public
				Immediate Worker	- Same as for the public			- Same as for the public	S3	S3	16	15	- Same as for the public
				Rationale for frequency of event: Total blockage of the seal loop (Without prevention or mitigation) is expected to occur during the life of the facility; this makes the event frequency an F3 Potential for contamination of the environment: E3									
Hazard – Radiological and toxicological material in the tank													
33	E-1	Release of radiological material due to dome failure caused by flammable gas headspace deflagration	Accumulation of flammable gas from steady state generation and ignition source	Public	Engineered Features: - Operating ventilation system (airflow through the tanks) prevents flammable gas accumulation - Flow monitoring is Safety-Class Administrative Features: - AC 5.29, Flammable gas controls	F3	F2	Engineered Features: - Operating ventilation system (airflow through the tanks) mitigates flammable gas accumulation Administrative Features: - None Identified	S3	S3	16	15	- None identified
				Co-located Worker	- Same as for the public			- Same as for the public	S3	S3	16	15	- Same as for the public
				Immediate Worker	- Same as for the public			- Same as for the public	S3	S3	16	15	- Same as for the public
				Rationale for frequency of event: Radioactive waste generates flammable gases in all AWF tanks; without prevention or mitigation, flammable conditions within the tank are expected to occur in days, weeks, or months depending on initial tank conditions; an ignition source is assumed to be present; this makes the event frequency an F3 Potential for contamination of the environment: E3									

Table B-1. Hazards Analysis Summary. (30 sheets)

Event No.	Event Category	Postulated Event Description	Significant Causes or Energy Sources	Receptor	Credited Prevention (Attributes that Lower Frequency)	Event Frequency		Credited Mitigation (Attributes that Lower Consequences)	Consequences		Risk Bin Number		Defense-in-Depth Controls
						Without Prevent	With Prevent		Without Mitigat	With Mitigat	Without Prevent Mitigat	With Prevent Mitigat	
Hazard – Radiological and toxicological material in the tank													
34	E-1	Release of radiological material due to dome failure caused by flammable gas headspace deflagration	Accumulation of flammable gas resulting from a GRE and ignition source	Public	Engineered Features: - Flow monitoring is Safety-Class - Lock out recirculation system for suspect tank(s) Administrative Features: - AC 5.29, Flammable gas controls	F3	F2	Engineered Features: - Operation of ventilation will purge tank of flammable gases Administrative Features: - None Identified	S3	S3	16	15	- ALC operation available
				Co-located Worker	- Same as for the public			- Same as for the public	S3	S3	16	15	- Same as for the public
				Immediate Worker	- Same as for the public			- Same as for the public	S3	S3	16	15	- Same as for the public
				Rationale for frequency of event: Tanks identified as GRE potential tanks are, by definition, those tanks which could have a release that exceeds 25% of the LFL; an accumulation of flammable mixtures is anticipated in these tanks during the life of the facility; an ignition source is assumed to be present; this makes the event frequency an F3 Potential for contamination of the environment: E3								
Hazard – Radiological and toxicological material in the tank													
35	E-7	Release of radiological material due to dome failure or collapse caused by excessive vacuum	Blocked inlet breather. Overspeeding exhaust fan. Excessively open exhaust valve.	Public	Engineered Features: - Vacuum relief valve Administrative Features: - Pressure drop across inlet breather - Vacuum monitoring - Flow monitoring	F2	F1	Engineered Features: - None Identified Administrative Features: - Alarm response procedure	S3	S3	15	13	- Inlet heater protect against ice on filters - Flow monitoring
				Co-located Worker	- Same as for the public			- Same as for the public	S3	S3	15	13	- Same as for the public
				Immediate Worker	- Same as for the public			- Same as for the public	S3	S3	15	13	- Same as for the public
				Rationale for frequency of event: Total blockage of the inlet breather (ice, tumbleweed, plastic bag, particulate build-up, or other means) is expected to occur during the life of the facility and has a frequency an F3; this event also requires the simultaneous failure of the pressure relief valve; these to failures make the frequency an F2 Potential for contamination of the environment: E3								

Table B-1. Hazards Analysis Summary. (30 sheets)

Event No.	Event Category	Postulated Event Description	Significant Causes or Energy Sources	Receptor	Credited Prevention (Attributes that Lower Frequency)	Event Frequency		Credited Mitigation (Attributes that Lower Consequences)	Consequences		Risk Bin Number		Defense-in-Depth Controls
						Without Prevent	With Prevent		Without Mitigat	With Mitigat	Without Prevent Mitigat	With Prevent Mitigat	
Hazard – Radiological and toxicological material in the tank													
36	E-6	Release of radiological material due to dome failure or collapse caused by excessive vacuum	Ventilation imbalance	Public	Engineered Features: - Flow monitoring Administrative Features: - Pressure monitoring - Alarm response procedure	F2	F1	Engineered Features: - Tank vacuum relief valve Administrative Features: - Alarm response procedure	S3	S3	15	13	- Valve settings can be manually set
				Co-located Worker	- Same as for the public			- Same as for the public	S3	S3	15	13	- Same as for the public
				Immediate Worker	- Same as for the public			- Same as for the public	S3	S3	15	13	- Same as for the public
				Rationale for frequency of event: Failure of the ventilation system to create a dome failure is unlikely because of the presence of the inlet system and pressure relief valves (these would also have to fail) Potential for contamination of the environment: E3									
37	E-6	Release of radiological material due to dome collapse caused by excessive pressure	Excessive air supply to air lift circulators	Public	Engineered Features: Administrative Features: - Interlock to shut off ALC on high pressure - High pressure alarm - Alarm response procedure	F2	F1	Engineered Features: - Manifolded to other AWF tanks and main ventilation system - System is to be operable and operating Administrative Features: - Alarm response procedure	S3	S3	15	13	- Pressure monitoring
				Co-located Worker	- Same as for the public			- Same as for the public	S3	S3	15	13	- Same as for the public
				Immediate Worker	- Same as for the public			- Same as for the public	S3	S3	15	13	- Same as for the public
				Rationale for frequency of event: Normal operation of the ALC results in 0.04 m^3/s (80 cfm) being introduced into the tank; the tank is manifolded to the other three tanks; the inlet filter system is rated for 0.24 m^3/s (500 cfm); the frequency of the given event is deemed to be F2 Potential for contamination of the environment: E3									

Table B-1. Hazards Analysis Summary. (30 sheets)

Event No.	Event Category	Postulated Event Description	Significant Causes or Energy Sources	Receptor	Credited Prevention (Attributes that Lower Frequency)	Event Frequency		Credited Mitigation (Attributes that Lower Consequences)	Consequences		Risk Bin Number		Defense-in-Depth Controls
						Without Prevent	With Prevent		Without Mitigat	With Mitigat	Without Prevent Mitigat	With Prevent Mitigat	
Hazard - Radiological and toxicological material in the process stream													
38	E-6	Release of radiological material due to a leak in the recirculation ventilation cooling system or the exhaust ventilation cooling system	Corrosion of shell or tubes	Public	Engineered Features: - Failure requires failure of both the propylene glycol system and cooling tower (two failures) - Cooling fluid is at a higher pressure than the process gas (ventilation airstream) Administrative Features: - None identified)	F1	F1	Engineered Features: - None identified Administrative Features: - None identified	S0	S0	7	4	- System components are modular
				Co-located Worker	- Same as for the public			- Same as for the public	S0	S0	7	4	- Same as for the public
				Immediate Worker	- Same as for the public			- Same as for the public	S0	S0	7	4	- Same as for the public
				Rationale for frequency of event: Corrosion of both the shell and the tubes of the condenser put the frequency in the F1 range Potential for contamination of the environment: E0, slight to negligible									

Table B-1. Hazards Analysis Summary. (30 sheets)

Event No.	Event Category	Postulated Event Description	Significant Causes or Energy Sources	Receptor	Credited Prevention (Attributes that Lower Frequency)	Event Frequency		Credited Mitigation (Attributes that Lower Consequences)	Consequences		Risk Bin Number		Defense-in-Depth Controls
						Without Prevent	With Prevent		Without Mitigat	With Mitigat	Without Prevent Mitigat	With Prevent Mitigat	
Hazard – Radiological and toxicological material in the exhaust stream and built up on the HEPA filters													
39	E-6	Release of radiological material due to HEPA filter AZ-K1-4-1A blow out	High dP due to excessive HEPA filter loading, excessive system moisture carryover, high tank pressure, etc.	Public	Engineered Features: - Heater - Redundant HEPA filters Administrative Features: - Pressure drop across HEPA filter tested annually	F1	F1	Engineered Features: - Redundant HEPA filters Administrative Features: - Filters to be replaced if they fail dP testing - Filters to be replaced if they fail radioactive load surveillance	S1	S1	5	5	- Limits on radioactive loading on filters (200 mrem/h, 800 mrem/h for HEME) - Recirculation system, condenser, and HEME remove moisture and particulate loading from airstream - Redundant ventilation trains
				Co-located Worker	- Same as for the public			- Same as for the public	S1	S1	5	5	- Same as for the public
				Immediate Worker	- Same as for the public			- Same as for the public	S1	S1	5	5	- Same as for the public
				Rationale for frequency of event: Event requires the failure of two HEPA filters in series; this makes the event frequency in the F1 range Potential for contamination of the environment: E1									

Table B-1. Hazards Analysis Summary. (30 sheets)

Event No.	Event Category	Postulated Event Description	Significant Causes or Energy Sources	Receptor	Credited Prevention (Attributes that Lower Frequency)	Event Frequency		Credited Mitigation (Attributes that Lower Consequences)	Consequences		Risk Bin Number		Defense-in-Depth Controls
						Without Prevent	With Prevent		Without Mitigat	With Mitigat	Without Prevent Mitigat	With Prevent Mitigat	
Hazard - Radiological and toxicological material in the exhaust stream and built up on the HEPA filters													
40	E-1	Release of radiological material due to HEPA filter failure	HEPA filter failure caused by: - External fire in the vicinity of the HEPA filters - Fire in the ventilation system caused by flammable gas buildup and ignition - Fire from electrical failure of the heaters in the common exhaust system, etc. - Damage to HEPA filters from an external event, dropping of a heavy load, etc.	Public	Engineered Features: - Backflow prevention on fan housing - Firewall between systems - Temperature monitoring isolates upon high temperature Administrative Features: - None identified	F1	F1	Engineered Features: - None identified Administrative Features: - Limits on radioactive loading	S1	S1	5	5	- Maximum filter loading is limited to 200 mrem/h contact (800 mrem/h for HEME)
				Co-located Worker	- Same as for the public			- Same as for the public	S1	S1	5	5	- Same as for the public
				Immediate Worker	- Same as for the public			- Same as for the public	S1	S1	5	5	- Same as for the public
				Rationale for frequency of event: Event requires the fire (located at or near the HEPA filters) and the ignition of the HEPA filters; this puts the event frequency in the F1 range Potential for contamination of the environment: E1									

Table B-1. Hazards Analysis Summary. (30 sheets)

Event No.	Event Category	Postulated Event Description	Significant Causes or Energy Sources	Receptor	Credited Prevention (Attributes that Lower Frequency)	Event Frequency		Credited Mitigation (Attributes that Lower Consequences)	Consequences		Risk Bin Number		Defense-in-Depth Controls
						Without Prevent	With Prevent		Without Mitigat	With Mitigat	Without Prevent Mitigat	With Prevent Mitigat	
Hazard – Radiological and toxicological material in the exhaust stream													
41	E-6	Release of radiological material due to reduced efficiency of the HEPA filters	- HEPA filter seal failure - Defective HEPA filter - Deteriorated HEPA filter	Public	Engineered Features: - Requires double failure of HEPA filters for loss of containment Administrative Features: - Filter leak tests - Delta pressure drop testing of the filters annually - Filter leak test before and after installation and	F1	F1	Engineered Features: - None Identified Administrative Features: - None Identified	S0	S0	2	2	- Maximum filter loading is limited to 200 mrem/h contact (800 mrem/h for HEME) - Exhaust stack radiation monitor and alarm - Pressure monitoring - Exhaust stack height
				Co-located Worker	- Same as for the public			- Same as for the public	S0	S0	2	2	- Same as for the public
				Immediate Worker	- Same as for the public			- Same as for the public	S0	S0	2	2	- Same as for the public
				Rationale for frequency of event: Event requires the failure of two HEPA filters in series; this makes the event frequency in the F1 range Potential for contamination of the environment: E0, slight to negligible									

Table B-1. Hazards Analysis Summary. (30 sheets)

Event No.	Event Category	Postulated Event Description	Significant Causes or Energy Sources	Receptor	Credited Prevention (Attributes that Lower Frequency)	Event Frequency		Credited Mitigation (Attributes that Lower Consequences)	Consequences		Risk Bin Number		Defense-in-Depth Controls
						Without Prevent	With Prevent		Without Mitigat	With Mitigat	Without Prevent Mitigat	With Prevent Mitigat	
Hazard – Radiological and toxicological material on the HEPA filters													
42	E-7	Occupational radiation exposure	HEPA filter radioactive particle accumulation	Public	Engineered Features: - HEPA filters are SC-2 Administrative Features: - AC 5.13, Radiation protection program	F3	F3	Engineered Features: - None identified Administrative Features: - Filters to be replaced if they fail dP testing - Filters to be replaced if they fail radioactive load surveillance	S0	S0	7	7	- Recirculation system washes out particulates of airstream and returns condensate to AWF tank - HEME washes out particulates of airstream and returns condensate to catch tank - Maximum radiological loading on filters limited to 200 mrem/h and 800 mrem/h on HEME
				Co-located Worker	- Same as for the public			- Same as for the public	S0	S0	7	7	- Same as for the public
				Immediate Worker	- Same as for the public			- Same as for the public	S1	S1	11	11	- Same as for the public
				Rationale for frequency of event: HEPA filter are designed to trap particulates; this makes the event frequency anticipated or in the F3 Potential for contamination of the environment: E0, slight to negligible									

Table B-1. Hazards Analysis Summary. (30 sheets)

Event No.	Event Category	Postulated Event Description	Significant Causes or Energy Sources	Receptor	Credited Prevention (Attributes that Lower Frequency)	Event Frequency		Credited Mitigation (Attributes that Lower Consequences)	Consequences		Risk Bin Number		Defense-in-Depth Controls
						Without Prevent	With Prevent		Without Mitigat	With Mitigat	Without Prevent Mitigat	With Prevent Mitigat	
Hazard – Radiological and toxicological material in the ventilation ducting													
43	E-5	Release of radiological material and exposure to radiation	Criticality caused by buildup of radioactive material in the ducting	Public	Engineered Features: - Geometry of ventilation system not conducive to criticality Administrative Features: - AC 5.3, Criticality prevention program	F0	F0	Engineered Features: - None identified Administrative Features: - None identified	S0	S0	1	1	- None Identified
				Co-located Worker	- Same as for the public			- Same as for the public	S0	S0	1	1	- Same as for the public
				Immediate Worker	- Same as for the public			- Same as for the public	S3	S3	10	10	- Same as for the public
				Rationale for frequency of event: Event requires the failure of two HEPA filters in series; this makes the event frequency in the F1 range Potential for contamination of the environment: E0, slight to negligible									

Table B-1. Hazards Analysis Summary. (30 sheets)

Event No.	Event Category	Postulated Event Description	Significant Causes or Energy Sources	Receptor	Credited Prevention (Attributes that Lower Frequency)	Event Frequency		Credited Mitigation (Attributes that Lower Consequences)	Consequences		Risk Bin Number		Defense-in-Depth Controls
						Without Prevent	With Prevent		Without Mitigat	With Mitigat	Without Prevent Mitigat	With Prevent Mitigat	
Hazard – Leaking Ethylene Glycol into AWF tank													
44	N/A	Coolant leakage from recirculation cooling unit leaks into tank	Corrosion or mechanical failure	Public	Engineered Features: - Coolant lines are made of stainless Administrative Features: - None identified	A	A	Engineered Features: - None Identified Administrative Features: - None Identified	N	N	12	12	
				Co-located Worker	- Same as for the public				N	N	12	12	
				Immediate Worker	- Same as for the public				N	N	12	12	
				Potential for contamination of the environment: E0, slight to negligible									

AC = Administrative Control.
ALC = airlift circulators.
AWF = Aging Waste Facility.
GRE = gas release event.
HEGA = high-efficiency gas adsorber.
HEME = high-efficiency mist eliminator.
HEPA = high-efficiency particulate air (filters).
OSD = Operating Specifications Document.
RCT = radiological control technician.
PIC = person-in-charge.
USQ = Unreviewed Safety Question.

Note: [1]HNF-IP-0842, 1997, TWRS Administration, Lockheed Martin Hanford Corporation, Richland, Washington.

Table B-2. HazOp Definition Guide.

Guide Words / Process Variables	No, Not, Non	Less, Low, Short	More, High, Long	Part of	As Well As, Also	Other Than	Reverse
Flow	No Flow	Low Rate, Low Total	High Rate, High Total	Missing Ingredient	Misdirection, Impurities	Wrong Material	Backflow
Pressure	Open to Atmosphere	Low Pressure	High Pressure				Vacuum
Temperature	Freezing	Low Temperature	High Temperature				Auto-refrigeration
Level	Empty	Low Level	High Level	Low Interface			
Agitation	No Mixing	Poor Mixing	Excessive Mixing	Mixing Interruption	Mixing Interruption		Phase Separation
Reaction	No Reaction	Slow Reaction	Runaway Reaction	Partial Reaction	Partial Reaction	Wrong Reaction	Decomposition
Time Procedure	Skipped or Missing Step	Too short, Too Little	Too Long, Too Much	Action(s) Skipped	Extra Action(s) (Short cuts)	Wrong Action	Out of Order, Opposite
Speed	Stopped	Too Slow	Too Fast	Out of Synch		Web or belt Break	Backward
Special	Utility Failure	External Leak	External Rupture	Tube Leak	Tube Rupture	Startup, Shut down, Maintenance	

Table B-3. Frequency Evaluation Levels.

Acronym	Description	Frequency Level (per yr^{-1})
A (F3)	Anticipated, Expected	$>10^{-2}$
U (F2)	Unlikely	$10^{-4}<f\leq 10^{-2}$
EU (F1)	Extremely Unlikely	$10^{-6}<f\leq 10^{-4}$
BEU (F0)	Beyond Extremely Unlikely	$\leq 10^{-6}$

Note: The information in this table is from WHC-CM-4-46, Safety Analysis Manual, Section 7.0, "Risk," Rev. 3, Westinghouse Hanford Company, Richland, Washington.

Table B-4. Radiological and Chemical Consequence Evaluation Levels for Hazard Receptors.

Consequence Level (Abbreviation) ↓	Consequences to the Public, Workers, or Environment
High (H) or S3	May cause deaths onsite; loss of the facility or operation; major injuries or illness offsite; radiation exposure to offsite individuals in excess of annual limits; or severe impact on the environment.
Moderate (M) or S2	May cause severe injuries or severe occupational illness onsite; radiation exposure to onsite individuals in excess of annual limits; major damage to a facility or operation; minor illness or injury offsite; exposure of offsite individuals to radiation below annual limits; or major impact on the environment.
Low (L) or S1	May cause minor injuries or minor occupational illness onsite; exposure of onsite individuals to radiation below annual limits; negligible impact offsite; or minor impact on the environment.
Negligible (N) or S0	Will not result in injury; occupational illness; exposure onsite or offsite; or result in significant impact on the environment.

Note: The information in this table is from WHC-CM-4-46, Safety Analysis Manual, Section 7.0, "Risk," Rev. 3, and WHC-SD-WM-SARR-011, 1995, Toxic Chemical Considerations for Tank Farm Releases, Rev. 1, Westinghouse Hanford Company, Richland, Washington.

Table B-5. Risk Binning Matrix.

Frequency → / Radiological or Toxicological Consequence ↓	Beyond Extremely Unlikely (F0) ($\leq 10^{-6}$/yr)	Extremely Unlikely (F1) ($10^{-6} < f \leq 10^{-4}$/yr)	Unlikely (F2) ($10^{-4} < f \leq 10^{-2}$/yr)	Anticipated (F3) ($>10^{-2}$/yr)
High (S3)	10	7	4	1
Moderate (S2)		8	5	2
Low (S1)		9	6	3
Negligible (S0)	11	12		

Key:

→ Risk Bins 1,2,3,4,5,7: Accident Analysis required; may require safety structures, systems, and components (SSC); may require interim operation safety requirements

→ Risk Bins 6,8,9: may require administrative or OSD level controls

Table B-6. Energy Source Checklist from DOE.[a] (4 sheets)

Type of Hazard	Form of Hazard	Comment
Electrical	Battery banks	Uninterruptible Power Source, 208 V rectified, sealed lead-acid battery, because of seal not a source for toxic and loss of it covered in PHA as power loss.
	Diesel units	Battery Charger for batteries for diesel - 125 KW output, in a vented building; no buildup of hydrogen. Covered in PHA as total loss of power
	High lines	None
	Transformers	Yes, one 300 KW in yard (1380 V and down to 120 V), outside fence and not covered in PHA
	Wiring	241-AY-101,-102, 241-AZ-101,-102 in trays, not covered in W-030 PHA, but covered in TWRS PHA
	Switchgear	Outside the tank farms and fence, except diesel switchgear in closed building
	Underground wiring	None for W-030 PHA, but in 241-AY-101,-102 and 241-AZ-101,-102 TWRS PHA
	Cable runs	Instruments - 120 V
	Service outlets and fittings	Yes, welding receptacles in tank farms covered in TWRS PHA
	Pumps	Yes, pumps wired per codes for W-030 additions; other pumps 241-AY-101,-102, 241-AZ-101,-102 covered in TWRS PHA
	Motors	Covered by pumps
	Heaters	Fire covered in W-030 PHA, wired per code, 480 V/code
	Power tools	None
	Small equipment	Instrumentation 120 V or lower.
	Electrical equipment	241-AY-101,-102, 241-AZ-101,-102 covered in TWRS PHA
	Hot plates	None
	High voltage	Yes, covered for sources of W-030 equipment
	Locomotive, electrical	None
	Transmission lines	None
	Other	Switchgear for diesel
Nuclear Criticality	Vaults/pits	None
	Temporary storage areas	None
	Receiving areas	None
	Shipping areas	None
	Casks	None
	Burial grounds	None
	Storage tanks	241-AY-101,-102, 241-AZ-101,-102 and pits
	Canals and basins	None
	Reactor in-tank storage areas	None
	Dollies	None
	Trucks	None
	Hand carry	None
	Cranes	None
	Lifts	None
	Shops	None
	Hot cells	None
	Assembly areas	None
	Inspection areas	None
	Laboratories	None
	Pilot plants	None
Nuclear (in-reactor)	Reactors	None
	Critical facilities	None
	Subcritical facilities	None

Table B-6. Energy Source Checklist from DOE.[a] (4 sheets)

Type of Hazard	Form of Hazard	Comment
Kinetic/linear (in plant)	Fork lifts	None
	Carts	None
	Dollies	None
	Railroad	None
	Surfaces	None
	Obstructions (collision with)	Stack, covered in W-030 PHA
	Shears	None
	Presses	None
	Crane loads in motion	Tie-ins, riser damage if shield plug drops
	Pressure vessel blowdown	None
	Power assisted driving tools	Construction, pipe wrench, little or no damage
	Cars	Stack inlet stations - maintenance, impossible to get to
	Trucks	Stack inlet stations - maintenance, impossible to get to
	Buses	None
	Heavy equipment	Cranes, guzzler trucks
	Centrifuges	None
	Motors	With pumps
	Pumps	241-AY, AZ-101,102, outside of farm
	Cooling tower fans	Outside fence
	Cafeteria equipment	None
	Laundry equipment	None
	Gears/compressors	None/motor operated valves
	Shop equipment (grinders, saws, brushes, etc.)	Construction
	Fans	Chiller fans, protected from doing damage
PV-KD (pressure, tension)	Boilers/chillers	None/2 by 2 stage refrigeration Compressor, covered in W-030 PHA
	Heated surge tanks	None
	Autoclaves	None
	Test loops and facilities	None
	Gas bottles	Construction
	Pressure vessels	None
	Negative pressure, collapse	241-AY, 241-AZ-101,-102/air inlets and relief valves mitigate
	Stressed members	None
	Steam Headers and lines	None
MGH (falls and drops)	Human effort	Maintenance
	Vent cells	Maintenance/short time
	Bucket and ladders	None
	Trucks	Maintenance
	Hoists and elevators	None
	Jacks	None
	Scaffold and ladder	Maintenance
	Excavations	Construction - tie-ins, per codes
	Pits	None
	Elevated doors	None
	Raw water lines	None
	Canals	None
	Vessels	None
	Lifts	Construction maintenance
	Cranes	Construction maintenance, carbon filters weigh only 150 pounds

Table B-6. Energy Source Checklist from DOE.[a] (4 sheets)

Type of Hazard	Form of Hazard	Comment
MGH (falls and drops) (Cont'd)	Packing materials	None
	Rags	None
	Gasoline	None
	Paint solvent	None
	Diesel fuel	Inside building 701-AZ (FHA), fill per codes
	Hydrogen	241-AY, 241-AZ-101,-102/Battery charger - building ventilated
	Organics	None
	Nitric acid	None
	Gases	241-AY, 241-AZ-101,-102
		None
Corrosive	Acids	Batteries/UPS, vented/sealed
	Caustic	241-AY-101,-102, 241-AZ-101,-102
	Natural chemicals	241-AY-101,-102, 241-AZ-101,-102
	Decon solution	None
	High temperature waste	241-AY-101,-102, 241-AZ-101,-102/241-AZ-102[b], covered in Tank Bump and flow in W-030 PHA
	Plug storage	None
Radioactivity	Storage areas	None
	Storage buildings	None
	Radioactive sources	241-AY-101,-102, 241-AZ-101,-102, covered in Tank Bump and filter blowout in W-030 PHA
	Building	Tank ventilation
	Filters	Covered in W-030 PHA
	Condenser cell	Yes
Radioactivity (Cont'd)	Electric furnace	None
	Blacklight (e.g., magniflux)	None
	Laser	None
	Medical x-ray	None
	Radiography equipment and sources	None
	Electron beam	None
	Equipment noise	Some noise will be generated by the heating, ventilating, and air-conditioning system and the chiller system. However, rotating equipment, diesel generator designed for minimum noise
	Ultrasonic cleaners	None
Thermal radiation	Furnaces	None
	Boilers	None
	Steam lines	None
	Lab and pilot plant equipment	None
	Sun	Sun is often present on the Hanford Site, but does not effect Project W-030
Thermal (except radiant)	Convection	Cooling towers
	Heavy metal weld preheat	None
	Exposed steam pipes	None
	Electric heaters	Ventilation inlet and main system - Maintenance, covered in W-030 PHA
	Fire boxes	None
	Lead melting pot	None
	Electrical wiring and equipment	Wired per code and does not present a thermal energy - covered above as equipment

Table B-6. Energy Source Checklist from DOE.[a] (4 sheets)

Type of Hazard	Form of Hazard	Comment
Explosive pyrophoric	Caps	None
	Primer cord	None
	Dynamite	None
	Power metallurgy	None
	Dusts	None
	Hydrogen (including battery banks and water decomposition)	241-AY-101,-102, 241-AZ-101,-102. Diesel building battery charger (ventilated)
Explosive pyrophoric	Peroxides - superoxides	None
	Acetone	None
	Fluorides	None
	Carbon monoxide	None
	Lead	None
	Ammonia and compounds	Possible waste in tanks: Part of toxicological constituents of SARR-011
Other	Dusts and particulates	Environmental dusts could be present, but not considered in PHA
	Pesticides-herbicides-insecticides	Spray each spring for pesticides and herbicides-minimal affect and not covered in PHA
	Bacteria	None
	Beryllium and compounds	None
	Chlorine and compounds	None
	Sandblast	None
	Metal plating	None
	Asphyxiation-drowning	None

FHA = Fire Hazards Analysis.
PHA = Preliminary Hazard Analysis.
TWRS = Tank Waste Remediation System.

[a]DOE-45/19, 1979, Job Safety Analysis, SSDC-19, U.S. Department of Energy, Washington, D.C.

[b]WHC-SD-WM-SARR-011, 1995, Toxic Chemical Considerations for Tank Farm Releases, Rev. 1, Westinghouse Hanford Company, Richland, Washington.

Table B-7. Summary of Hazardous Events.

Hazardous Event	Definition of Event
Loss of containment	For the hazard identification task, loss of containment was considered as the breach of a barrier resulting in the release of hazardous liquid material (radioactive and/or toxic chemical).
Loss of confinement	For the hazard identification task, loss of confinement was considered as the breach of a barrier resulting in the release of hazardous gaseous or airborne material (radioactive and/or toxic chemical).
Waste disposal	Consistent with the requirements of DOE 5480.23 (DOE 1992) consideration of hazards associated with waste disposal and handling were limited to those hazards involving the waste that is generated incidental to the performance of functions related to the waste storage and treatment mission at tank farms.
Criticality	The hazards associated with criticality were identified considering two different perspectives based upon the effects of the event. These were the direct effects to personnel (such as direct radiation exposure) and the effects that result from a sequence initiated by criticality as an energy source that may lead to a release of hazardous material.
Natural phenomena	The hazards associated with natural phenomena were identified considering two different perspectives based upon the effects of the event. These were the direct effects to personnel (such as physical injury and the effects that result from a sequence initiated by natural phenomena such as an energy source that may lead to a release of hazardous material.
Fire and deflagration	The hazards associated with fires and explosions were identified considering two different perspectives based upon the effects of the event. These were the direct effects to personnel (such as physical injury) and the effects that result from a sequence initiated by a fire or deflagration of an energy source that may lead to a release of hazardous material.
Interfaces	This category was used to identify hazards that may be associated with interfaces between the major functional segment under consideration and operations/activities related to the other major functional segments. Hazards that did not fit within the context of the other hazard categories were included under interfaces.
Extrinsic hazards	Hazards associated with facilities or activities outside of tank farms. No impact to existing extrinsic hazards was identified in this assessment and therefore no further action was taken.
Testing, surveillance, and maintenance	This category was used to identify hazards that are uniquely associated with the testing, surveillance, and maintenance activities associated with the major functional segment under consideration. The hazards considered were related to both personnel exposure to hazardous materials (radioactive and toxic chemical) and potential personnel injury.
Industrial	Injury to operating personnel – This category was used to identify the general occupational hazards (radiological, hazardous chemical and general industrial) associated with the major functional segment under consideration.

DOE 5480.23, 1992, Nuclear Safety Analysis Reports, Change 1, U.S. Department of Energy, Washington, D.C.

ATTACHMENT B-1

LETTER REPORT TRANSMITTAL LETTER

This page intentionally left blank.

Westinghouse Hanford Company **Internal Memo**

8M400-JEK-96015

From: Consequence Analysis
Phone: 376-9219 A3-34
Date: September 27, 1996
Subject: VALIDATION OF THE W-030 PROJECT PHA

To: R. L. Guthrie A3-37

cc: S. M. Stahl A3-37
JEK File/LB

Reference: WHC-CM-6-32, Section WP-4.6, Rev. 1, Hazard Analysis, Safety Analysis and Nuclear Engineering Work Procedures

Monday and Tuesday, September 23 and 24, 1996 we met to verify the existing PHA for the W-030 Project. Those that met at these meetings included the following:

Frank T. Clifton
Richard L. Guthrie
Morgan D. Harding
Mark G. Hunn
John E.kelly
Scott R. Pierce
Paul D. Rice
Gary R. Tardiff

Brief resumes for these gentlemen appear attached to this report. Initially, we developed a DOE-RL approved Energy Source Checklist. We went through the list and determined what energy sources are affected by the W-030 Project. Included are those energy sources either not part of the project or the reasoning for not developing them further in the W-030 PHA. This checklist is attached. We also verified which of these events should be included in the W-030 PHA. We went through each Event Category, Postulated Event Description, Significant Causes of Energy Source including any new events in the PHA and affirmed that the information was correct. Next, the accident frequency and mitigation feature was verified for each event. Some of the Engineering attributes that lower the frequency were found to be incorrect and were removed. We then verified what was used to reduce the frequency and made sure that these items were not included in the Defense in Depth Column. Table F-5 of reference 1 was used for the frequency ranges. Where necessary, the consequences were updated using Table F-3 of reference 1. Finally, the Risk Bin Numbers were updated to the latest Risk Matrix Bin Numbers found in Table F-6 of reference 1.

HAZARD ANALYSIS PARTICIPANTS

The following contains the names and experience of the Hazard Analysis Participants for the W-030 project SARR.

Frank T. Clifton - Westinghouse Hanford Company - Principal Engineer

Mr. Clifton is a Mechanical Engineer assigned to TWRS Engineering and to the W-030 Project. He has 25 years in the nuclear industry including 20 years at Hanford; assigned to a variety of major projects, with primary responsibilities related to the design of nuclear ventilation systems.

Richard L. Guthrie - Westinghouse Hanford Company - Principal Engineer

Mr. Guthrie has over 19 years experience in Mechanical Engineering. Three and one half of those years have been spent at Hanford. Richard is a Registered Professional Engineer in Mechanical Engineering and a Certified Safety Professional in System Safety Aspects. He has performed PHAs and FTAs with companies like Loral Space Information Systems, Morton Thiokol, General Dynamics, and the Superconducting Super Collider. His TWRS experience includes numerous unreviewed safety evaluations and a HAZOP for the light duty utility arm. Richard is currently working in the TWRS SAR Engineering Group of the Safety Analysis and Nuclear Engineering Division.

Morgan D. Harding - Westinghouse Hanford Company

Mr. Harding has 11 years experience in the nuclear industry. The past six of those years have been in tank farms. Prior to that he was at N-Reactor. He has for the past 4 years been part of the TWRS management team managing planners for the Operations support group and Major Maintenance. Managed east tank farms Operations Field Support Group. His latest management position as Operations interface to construction forces, has given him over 2 years in the field working with the construction forces that have built and installed equipment for projects such as W-030 Aging Waste Ventilation System, W-320 106-C Sluicing System, W-151 101-AZ Retrieval Project, and the 107-AN Mixer Pump and Caustic Injection system. All of the above experience and knowledge of tank systems has brought him to the W-030 Project team as the operations representative for system start-up. This was to include development and implementation of procedures, training programs, system acceptance, etc.

Mark G. Hunn - Contract Engineer (Self) - Mechanical Engineer

Eighteen years experience in the armed forces and nuclear industries as a technical manager, project engineer, and field

crew supervisor. Background includes work on safety documentation, environmental cleanup and decontamination projects, supervision of operational nuclear reactors, and major system maintenance.

John E. Kelly - Westinghouse Hanford Company - Fellow Engineer

Mr. Kelly has 30 years experience in system safety reliability engineering with 6 years experience at Hanford including the N-Reactor PRA. He is a internationally recognized expert in system safety analysis and probabilistic safety assessments and a licensed Safety Engineer in the state of California. His experience in the DOE complex includes hazard and risk analysis work for the Savannah River Site, Sandia National Laboratories, Lawrence Livermore National Laboratory, and taught classes at Brookhaven and Argonne National Laboratories.

Scott, R. Pierce - Westinghouse Hanford Company - Cognizant Engineer W-030 Project

- Provided technical oversight for startup and future operation of the 5 million dollar ventilation facility.
- Coordinate preparation of 18 Operating Procedure, 50 Maintenance Procedures, 22 Alarm Response Procedures, and 8 Emergency Response Procedures.
- Provided technical input to planning and performing the system's 11 Acceptance Tests, 8 Pre-Operational Tests, and 2 Post-Operating Tests.
- Determined process and alarm set points for system operation.
- Developed operator surveillance of new facility.
- Participated on Formal Design Review team for Westinghouse's acceptance of system design.
- Held position on Project W-030 Test Review Board.

Paul D. Rice - ICF Kaiser Hanford - Senior Principal Engineer

Mr. Rice has been a Registered Mechanical Engineer since 1971, and has been employed at Hanford since 1970. He has been the lead HVAC design engineer for the W-030 project since its beginning, and was directly involved in the development and testing of the 1/7 scale process ventilation prototype. Mr. Rice has twenty eight years of diverse experience in the field of Mechanical Engineering, with particular emphasis on energy conservation, HVAC, and on mechanisms. Experience related to HVAC has included analysis, design, and field inspection of systems for nuclear processing facilities, research laboratories, and office buildings. Mechanisms experience includes preliminary design for reactor maintenance systems and special equipment. Other engineering experience has included aircraft HVAC systems, wind tunnel model design, and artificial kidney machine design.

Gary R. Tardiff - Westinghouse Hanford Company - Principal Engineer

Mr. Tardiff has 15 years experience at Hanford with 12 years at PUREX and 3 years at Tank Farms. Gary currently works in the East Tank Farm Engineering as a Project Cognizant Engineer. Previous work experience includes two years experience for E.I. Dupont de Nemours doing design, cost estimating, and development of pilot scale equipment, he also worked on production of experimental fluorocarbons for marketing and toxicological purposes. He worked for W.R. Grace for five years in production and process development of chelating agents for product yield increase and purification. He has a Bachelor of Science degree in Chemical Engineering and has participated in several HAZOPS including Project W-151, 204-AR Facility, Project W-030 and TWRS FSAR HAZOPs.

In the process of performing the PHA for the W-030 Project, we used the Energy Source Checklist from DOE. In the comment section of this table, we concluded whether the energy source was covered in the was unique to the W-030 Project and should be covered by the W-030 Project PHA, or whether this energy source does not affect the ventilation project and therefore coverage in the TWRS FSAR PHA and HAZOP analyses. This is also shown in the comment section. The checklist is attached.

John Kelly
Fellow Engineer

gjr

Concurrence: [original signed by] Date[09/27/97]
D. S. Leach, Manager
Consequence Analysis

Attachment B-1. Letter Report

Transmittal Letter (Kelly 1996)
(4 pages)

APPENDIX C

HAZARD EVALUATION RESULT

This page intentionally left blank.

APPENDIX C

HAZARD EVALUATION RESULT

See Appendix B, Section B.2.3, "Hazard Evaluation Results," of this addendum.

This page intentionally left blank.

APPENDIX D

CONTROL ALLOCATION TABLES

This page intentionally left blank.

APPENDIX D

CONTROL ALLOCATION TABLES

See Appendix B, Table B-1 "Hazard Analysis Summary," of this addendum.

This page intentionally left blank.

HNF-SD-WM-BIO-001
Revision 1

Tank Waste Remediation System Basis for Interim Operation

Volume VII:
Addendum 4

Prepared by
DE&S Hanford, Inc. for Lockheed Martin Hanford Corporation

Date Published
September 1998

Prepared for the U.S. Department of Energy

FLUOR DANIEL HANFORD, INC.
Richland, Washington

Hanford Management and Integration Contractor for the
U.S. Department of Energy under Contract DE-AC06-96RL13200

Approved for Public Release; Further Dissemination Unlimited

MIXER PUMP TEST
(241-AZ-101)
SAFETY ANALYSIS

ADDENDUM 4

September 1998

This page intentionally left blank.

EXECUTIVE SUMMARY

ES.1 FACILITY BACKGROUND AND MISSION

The purpose of this document is to describe and analyze the mixer pump test for Aging Waste Facility (AWF) Tank 241-AZ-101 and to address the "yes/maybe" responses marked for evaluation questions identified in Unreviewed Safety Question (USQ) Evaluation TF-94-0266. The scope of this document is limited to the performance of the mixer pump test for Tank 241-AZ-101. Unreviewed Safety Question Determination (USQD) TF-96-0018 verified that the installation of two mixer pumps into Tank 241-AZ-101 was within the current Tank Waste Remediation System (TWRS) Authorization Basis. USQDs TF-96-0461, TF-96-0448, and TF-96-0805 verified that the installation of the in-tank video camera, thermocouples, and Ultrasonic Interface Level Analyzer (URSILLA), respectively, were within the current TWRS Authorization Basis. USQD TF-96-1041 verified that the checkout testing of the installed equipment was within the current TWRS Authorization Basis. Installation of the pumps and equipment has been completed. This document provides an evaluation of safety considerations associated with operation of the mixer pumps for the mixer pump test. This document augments the existing AWF authorization basis as defined in the TWRS Basis for Interim Operation (BIO) (LMHC 1997), and as such, will use the TWRS Technical Safety Requirements (TSRs) of Noorani 1997 to adequately control the mixer pump test. The TSRs now include "Air Lift Circulator" controls which have been converted from the AWF Interim Operational Safety Requirements (Heubach 1996) to newly incorporated TWRS TSR controls, as identified in Wagoner 1997. The hazard and accident analysis is limited to the scope and impact of the mixer pump test, and therefore, does not address hazards already addressed by the current AWF authorization basis.

The mixer pump test has been evaluated to cover the use of either the existing ventilation system (241-A-702) or the ventilation system upgrade provided by Project W-030. Analysis of Project W-030 is outside of the scope of this document and is addressed in BIO Addendum 3 which, should the W-030 system be in service at the time of the mixer pump test, will have been approved and made a part of the TWRS authorization basis.

The test will use two high-capacity mixer pumps in various configurations and modes to demonstrate solids mobilization of waste in Tank 241-AZ-101. The information and experience gained during the test will provide data for comparison with sludge mobilization prediction models; provide data to estimate the number, location, and cycle times of the mixer pumps; and provide indication of the effects of mixer pump operation on the AWF tank systems and components. The slurry produced will be evaluated for future pretreatment processing. This process test does not transfer waste from the tank; the waste is mixed and confined within the existing system. At the completion of the mixer pump test, the mixer pumps will be stopped and normal tank operations, maintenance, and surveillance will continue. Periodic rotation of the mixer pumps and motor shafts, along with bearing greasing, is required to maintain the pumps following the mixer pump test.

ES.2 FACILITY OVERVIEW

An overview of the AWF, including a description of the facility mission and stage of life-cycle, is provided in the TWRS Basis for Interim Operations (BIO) HNF-SD-WM-BIO-001 and in Chapter 2 of this addendum. General TWRS and Hanford Site information is provided via reference to the approved TWRS BIO. Likewise, specific information pertaining to the AWF tanks is provided via reference to the approved TWRS BIO. Aspects of the mixer pump test and facility test configuration relevant to this safety evaluation are documented in Chapter 2 of this addendum.

ES.3 FACILITY HAZARD CLASSIFICATION

TWRS facilities, including the AWF, have been designated as Hazard Category 2 facilities (Table 5.1-1 of the TWRS BIO). The mixer pump test does not impact the Hazard Classification assumptions of Tank 241-AZ-101 (no change to the inventory or amount of the material at risk). Thus, Tank 241-AZ-101 remains classified as Hazard Category 2.

ES.4 SAFETY ANALYSIS OVERVIEW

Hazards associated with operation were evaluated using process hazard analysis and Hazards and Operability (HazOp) evaluation techniques. From the results of the hazard analysis, six postulated events were identified as representative of the significant hazards. These events are: (1) a ventilation system high-efficiency particulate air (HEPA) filter failure, (2) backflow through open tank riser, (3) leakage via failed vent ducting, (4) a breach of the tank due to internal or external mechanisms, (5) a nuclear criticality induced by mixer pump operation, and (6) a seismic event. These postulated events were evaluated, based on specific causes and conditions associated with the mixer pump test as described in Section 3.3.2.4 of this addendum. This evaluation resulted in the identification of four design basis accidents that are analyzed in Section 3.4.2 of this addendum. These accidents are: (1) unfiltered release of radionuclide and toxic aerosols from the tank, (2) tank bump, (3) breach of containment, and (4) over-pressurization caused by criticality. The various causes and conditions associated with each of these accident scenarios are identified in Table 3-5 of this addendum. A summary of the accident consequences and a comparison to the risk evaluation guidelines are provided in Table ES-1 of this addendum. A summary of the preventive and mitigative features is provided in Table ES-2 of this addendum.

ES.5 ORGANIZATIONS

Prior to October 1, 1996, Westinghouse Hanford Company and ICF Kaiser Hanford were responsible for design, construction, and testing associated with the mixer pump test. Westinghouse Hanford Company was also responsible for operations, project management, and safety analysis. Since October 1, 1996, Fluor Daniel Hanford, Inc., has acted as management contractor and is ultimately responsible for contract performance, which includes protecting the public, workers, and environment from anticipated hazards associated with

Hanford Site operations, and for being the focal point for interaction with the U.S. Department of Energy (DOE) and the stakeholders. Fluor Daniel Northwest, Inc., has been responsible for design, construction, and testing; Lockheed Martin Hanford Corporation has been responsible for operations; Numatec Hanford Corporation has been responsible for project management; and Duke Engineering and Services Hanford, Inc., has been responsible for the nuclear safety analysis and licensing process.

ES.6 SAFETY ANALYSIS CONCLUSIONS

It is concluded that the mixer pump test can be safely conducted using currently-approved TSRs in conjunction with Air Lift Circulator TSR controls, converted from Heubach 1996 as identified in Wagoner 1997, thus ensuring protection of the workers and the public.

ES.7 DOCUMENT ORGANIZATION

This document is organized in the format of DOE-STD-3009-94. General information pertaining to TWRS or the entire Hanford Site and specific information pertaining to the AWF tanks, but not directly relevant to the mixer pump test, are provided via reference to the approved TWRS BIO.

This page intentionally left blank.

Table ES-1. Summary of Accident Consequences.

Design Basis Accident Scenario	Mixer pump test Design Basis Accident consequences				Risk evaluation guidelines
			without prevention/ mitigation	with prevention/ mitigation*	
Unfiltered release of radionuclides or toxic aerosols (Section 3.4.2.1)					
HEPA filter failure due to over-pressure (Section 3.4.2.1.2) Frequency: EU	Radiological (rem)	Offsite	**	3.9 E-3	4
		Onsite	**	2.8	10
	Toxicological (SOF)	Offsite	**	2.7 E-5	1 (ERPG-2)
		Onsite	**	3.4 E-1	1 (ERPG-3)
Reverse flow through tank due to tank dome collapse and breach of confinement (Section 3.4.2.3.6) Frequency: BEU (see Breach of Containment)	This event is determined to be beyond extremely unlikely for mixer pump test.	Offsite and Onsite	None	N/A	N/A
Tank Bump (Section 3.4.2.2) Frequency: U	Radiological (rem)	Offsite	.22	None	0.5
		Onsite	250	None	5
	Toxicological (SOF)	Offsite	0.73	None	1 (ERPG-1)
		Onsite	4.9E+03	None	1 (ERPG-2)
Breach of containment (Section 3.4.2.3)					
Flammable Gas Deflagration (Section 3.4.2.3.1) Frequency: Accident prevented through TSR AC 5.9. 5.10. 5.11. Open USQ prevents quantification. Natural phenomena frequencies probably drive this to EU.	Radiological (rem)	Offsite	0.004	None	0.1
		Onsite	4.4	None	0.5
	Toxicological (SOF)	Offsite	0.7	None	1
		Onsite	820	None	1
Tank Dome Collapse (Section 3.4.2.3.6) Frequency: BEU	This event determined to be BEU for mixer pump test structural loadings.	Offsite and Onsite	None	N/A	N/A
Seismic during pumps operation (Section 3.4.2.3.7) Frequency: BEU	Analysis shows that pump support and riser configuration acceptable for applied design requirements.	Offsite and Onsite	None	N/A	N/A
Material degradation due to high temperature (Section 3.4.2.3.5) Erosion (Section 3.4.2.3.4) Missiles from the pumps (Section 3.4.2.3.3) Frequencies: BEU	Analyses show that these events are prevented and not credible.	Offsite and Onsite	None	N/A	N/A
Criticality (Section 3.4.2.4) Frequency: BEU	This event determined to be BEU for mixer pump test.	Offsite and Onsite	None	N/A (no preventive or mitigative features identified)	N/A

*Mitigation actions reduce numerical consequences. Prevention actions denoted by column entry of "None", since consequences are prevented. See Table ES-2 on the following page for specific Mitigation/Prevention actions.

**See Section 3.4.2.1.2.1 for discussion of unmitigated consequences.

(Note: Section numbers are sections in this addendum.)

A = anticipated (1/yr - 10^{-2}/yr)
BEU = beyond extremely unlikely ($\leq 10^{-6}$/yr)
EU = extremely unlikely (10^{-4}/yr - 10^{-6}/yr)
U = unlikely (10^{-2}/yr - 10^{-4}/yr)
N/A = not applicable
SOF = sum-of-fractions

Table ES-2. Summary of Preventive/Mitigative Actions.

Accident Scenario	Preventive or Mitigative Actions during mixer pump test	Applicable Control or Other Document
Unfiltered release of radionuclides and toxic aerosols from the tank (Section 3.4.2.1)	• Limiting the maximum activity on each filter to a level that gives an equivalent dose rate of 200 mrem/h on contact controls the amount of particulates that could be expelled.	TSR AC 5.18
Tank Bump (Section 3.4.2.2)	• Localized high temperatures may be caused by mixer pump operation. The mixer pumps will be turned off if the top 15 feet of waste reaches 195 °F or the waste below 15 feet reaches 215 °F. ALCs will be operated to provide more uniform temperature distributions per limits described below.	TSR LCO 3.3.2, 3.3.4
	• Upon loss of the primary ventilation system the mixer pump(s) will be turned off to control gas and heat buildup in the tank.	TSR LCO 3.2.1
	• During normal operation of the pump(s) and at the end of the test while the pumps are turned off, the waste temperature will be monitored and the air lift circulators operated as soon as the temperature reaches 230 °F for waste below 20 feet and 190 °F for the average waste solution.	TSR LCO 3.3.4
Breach of Containment (Section 3.4.2.3)	• High temperature (3.4.2.3.5):	
	- Primary tank exhaust ventilation system shall be operable.	TSR LCO 3.2.1, 3.3.2
	• Flammable gas deflagration (3.4.2.3.1):	
	- Implementation of Ignition Source Controls as well as monitoring for flammable gas are preventive measures against deflagration, breach of the tank, and breach of ventilation confinement in the event that an episodic gas release exceeds 100% of the lower flammability limit.	TSR AC 5.9, 5.10, 5.11
	- LCO 3.2.1 requires ventilation operability to prevent flammable gas accumulations. The vent system operation also prevents tank pressurization and an unfiltered release.	TSR LCO 3.2.1
	• Tank dome collapse due to overload (3.4.2.3.6):	
	- This event is deemed beyond extremely unlikely for the mixer pump test based on analysis of dead load, live load, jet impingement, and seismic loads. All components of the support system were found adequate to support the mixer pumps for both service and extreme conditions.	TSR AC 5.16
	• Seismic (3.4.2.3.7):	
	- Structural analysis of seismic loads shows that the pump support and riser configuration are acceptable for the applied design requirements.	Moody 1996
Criticality (Section 3.4.2.4)	• A Criticality Safety Evaluation Report prepared for Project W-151 identified no scenario associated with the mixer pump test that could credibly lead to criticality.	TSR AC 5.7

(Note: Section numbers are sections in this addendum.)

AC = Administrative Control
AWF = Aging Waste Facility
LCO = Limiting Condition for Operation
TSR = Technical Safety Requirement (TWRS)

CONTENTS

1.0 SITE CHARACTERISTICS 1-1
1.1 INTRODUCTION 1-1
1.2 REQUIREMENTS 1-1
1.3 SITE DESCRIPTION 1-1
1.4 ENVIRONMENTAL DESCRIPTION 1-1
1.5 NATURAL PHENOMENA THREATS 1-1
1.6 EXTERNAL MAN-MADE THREATS 1-2
1.7 NEARBY FACILITIES 1-2
1.8 VALIDITY OF EXISTING ENVIRONMENTAL ANALYSES 1-2

2.0 FACILITY DESCRIPTION 2-1
2.1 INTRODUCTION 2-1
2.2 REQUIREMENTS 2-2
2.3 FACILITY OVERVIEW 2-2
2.4 FACILITY STRUCTURE 2-2
2.5 PROCESS DESCRIPTION 2-4
2.5.1 Mixer Pump Testing 2-4
2.6 CONFINEMENT SYSTEMS 2-5
2.6.1 241-AY and 241-AZ (Aging Waste Facility) Tank Farm Ventilation System - Project W-030 2-5
2.6.2 241-AY and 241-AZ (Aging Waste Facility) Tank Farm Ventilation System - 241-A-702 2-5
2.6.3 Annulus Exhaust Flow Description 2-6
2.7 SAFETY SUPPORT SYSTEMS 2-6
2.7.1 Existing Equipment 2-6
2.7.2 Tank 241-AZ-101 Mixer Pump System Equipment 2-9
2.8 UTILITY DISTRIBUTION SYSTEMS 2-11
2.8.1 Water Supply Systems 2-11
2.8.2 Electric Power Systems 2-12
2.9 AUXILIARY SYSTEMS AND SUPPORT FACILITIES 2-12

3.0 HAZARD AND ACCIDENT ANALYSIS 3-1
3.1 INTRODUCTION 3-1
3.2 REQUIREMENTS 3-1
3.3 HAZARDS ANALYSIS 3-2
3.3.1 Methodology 3-2
3.3.2 Hazard Analysis Results 3-3
3.4 ACCIDENT ANALYSIS 3-6
3.4.1 Methodology 3-6
3.4.2 Design Basis Accidents 3-13
3.4.3 Beyond Design Basis Accidents 3-44

4.0 SAFETY SYSTEMS, STRUCTURES, AND COMPONENTS 4-1

5.0 DERIVATION OF TECHNICAL SAFETY REQUIREMENTS 5-1

6.0 PREVENTION OF INADVERTENT CRITICALITY 6-1
6.1 REQUIREMENTS 6-1
6.2 FACILITY IMPLEMENTATION 6-1
6.3 PROJECT IMPLEMENTATION 6-1

CONTENTS (Cont'd)

7.0 RADIATION PROTECTION 7-1
7.1 REQUIREMENTS 7-1
7.2 FACILITY IMPLEMENTATION 7-1
7.3 PROJECT IMPLEMENTATION 7-1

8.0 HAZARDOUS MATERIAL PROTECTION 8-1
8.1 REQUIREMENTS 8-1
8.2 FACILITY IMPLEMENTATION 8-1
8.3 PROJECT IMPLEMENTATION 8-1

9.0 RADIOACTIVE AND HAZARDOUS WASTE MANAGEMENT 9-1
9.1 REQUIREMENTS 9-1
9.2 FACILITY IMPLEMENTATION 9-1
9.3 PROJECT IMPLEMENTATION 9-1

10.0 INITIAL TESTING, IN-SERVICE SURVEILLANCE, AND MAINTENANCE 10-1
10.1 REQUIREMENTS 10-1
10.2 FACILITY IMPLEMENTATION 10-1
10.3 PROJECT IMPLEMENTATION 10-1
10.3.1 Initial Testing 10-1
10.3.2 In-Service Surveillance 10-1
10.3.3 Maintenance 10-1

11.0 OPERATIONAL SAFETY 11-1
11.1 REQUIREMENTS 11-1
11.2 FACILITY IMPLEMENTATION 11-1
11.3 PROJECT IMPLEMENTATION 11-1

12.0 PROCEDURES AND TRAINING 12-1
12.1 REQUIREMENTS 12-1
12.2 FACILITY IMPLEMENTATION 12-1
12.3 PROJECT IMPLEMENTATION 12-1

13.0 HUMAN FACTORS 13-1
13.1 REQUIREMENTS 13-1
13.2 FACILITY IMPLEMENTATION 13-1
13.3 PROJECT IMPLEMENTATION 13-1

14.0 QUALITY ASSURANCE 14-1
14.1 REQUIREMENTS 14-1
14.2 FACILITY IMPLEMENTATION 14-1
14.3 PROJECT IMPLEMENTATION 14-1

15.0 EMERGENCY PREPAREDNESS PROGRAM 15-1
15.1 REQUIREMENTS 15-1
15.2 FACILITY IMPLEMENTATION 15-1
15.3 PROJECT IMPLEMENTATION 15-1

CONTENTS (Cont'd)

16.0 PROVISIONS FOR DECONTAMINATION AND DECOMMISSIONING 16-1
16.1 REQUIREMENTS 16-1
16.2 FACILITY IMPLEMENTATION 16-1
16.3 PROJECT IMPLEMENTATION 16-1

17.0 MANAGEMENT, ORGANIZATION, AND INSTITUTIONAL SAFETY PROVISIONS . . . 17-1
17.1 REQUIREMENTS 17-1
17.2 FACILITY IMPLEMENTATION 17-1
17.3 PROJECT IMPLEMENTATION 17-1

18.0 REFERENCES 18-1
18.1 DOCUMENTS 18-1
18.2 U.S. DEPARTMENT OF ENERGY ORDERS, STANDARDS, AND HANDBOOKS . 18-6
18.3 U.S. ENVIRONMENTAL PROTECTION AGENCY 18-7
18.4 CONTROLLED MANUALS 18-7
18.5 NUCLEAR REGULATORY COMMISSION 18-7

APPENDIXES

3A HAZARDS AND OPERABILITY STUDY FOR PROJECT W-151 . . . . . 3A-1

3B HAZARDS ANALYSIS SUMMARY 3B-1

LIST OF FIGURES

2-1 Top-view of Tank 241-AZ-101 . . . . . F2-1

2-2 Mixer Pump Installation F2-2

2-3 Project W-030 Ventilation Upgrade System F2-3

2-4 Project W-030 High Heat Flow F2-4

2-5 Project W-030 Recirculation System (Typical) F2-5

2-6 241-A-702 Primary Ventilation System. (Aging Waste Facility) F2-6

2-7 Annulus Ventilation System for 241-AZ Tank Farms. (Aging Waste Facility) F2-7

3-1 Tank B-203 Alpha Activity by Core Segment. (Sludge) F3-1

3-2 Tank B-204 Alpha Activity by Core Segment. (Sludge) F3-2

3-3 Tank U-105 Alpha Activity by Core Segment (Sludge: Fusion Digest) F3-3

LIST OF TABLES

2-1 Project W-151 Mixer Pump Characteristics T2-1

2-2 Heat Generation and Removal T2-1

2-3 Mixer Pump Test Temperature Outline T2-1

3-1 Event Severity Index 3-6

3-2 Event Frequency Index 3-6

3-3 Radiological Risk Evaluation Guidelines 3-7

3-4 Toxicological Risk Evaluation Guidelines 3-7

3-5 Accident Selection and Mapping to Analysis 3-8

3-6 Centerline Atmospheric Dispersion Coefficients 3-10

3-7 Chronic Annual Average Atmospheric Dispersion Coefficients for 200 Area Tank Farms 3-10

3-8 In-Tank Concentration of the 11 Radionuclides Chosen for Inclusion in Accident Analysis 3-11

3-9 Unit Liter Doses for Inhalation and Ingestion 3-11

3-10 Release Durations for which the Maximum Puff χ/Q can be Applied . . 3-11

3-11 Tank Waste Liquids and Solids Analyte Concentrations 3-12

3-12 Sum-of-Fractions for Risk Evaluation Guidelines for a Unit Release of Waste Chemicals 3-13

3-13 Radiological and Toxicological Consequences of a HEPA Filter Failure Due to Over-Pressure Accident, with Comparison to Risk Guidelines 3-27

3-14 Tank Bump Radiological and Toxicological Consequences 3-31

3-15 Radiological and Toxicological Consequences of a Flammable Gas Deflagration 3-37

4-1 Preliminary Safety Equipment List T4-1

5-1 Summary of Preventive/Mitigative Actions T5-1

LIST OF ABBREVIATIONS

ALC	air lift circulator
AWF	Aging Waste Facility
BDBA	beyond design basis accident
BIO	Basis for Interim Operation
CFM	cubic feet per minute
CSER	criticality safety evaluation report
D&D	decontamination and decommissioning
DBA	design basis accident
DOE	U.S. Department of Energy
DST	double-shell tank
EIS	Environmental Impact Statement
ERPG	Emergency Response Planning Guideline
ES	Executive Summary
EU	extremely unlikely
FDC	Functional Design Criteria
FGEAB	Flammable Gas Equipment Advisory Board
GRE	gas release event
HazOp	hazards and operability study
HASP	Health and Safety Plan
HEGA	high-efficiency gas absorber
HEME	high-efficiency mist eliminator
HEPA	high-efficiency particulate air (filter)
IOSR	Interim Operational Safety Requirement
LFL	Lower Flammability Limit
LCO	Limiting Condition for Operation
NCAW	Neutralized Current Acid Waste
OSHA	Occupational Safety and Health Administration
PEL	permissible exposure limit
PF	partition fraction
PNNL	Pacific Northwest National Laboratory
RCRA	Resource Conservation and Recovery Act
RF	Respirable Fraction
RL	U.S. Department of Energy, Richland Operations Office
SC	Safety-Class
SDC	Standard Design Criteria
SHMS	Standard Hydrogen Monitoring System
SOF	sum-of-fractions
SSC	structure, system, and component
STOMP	Subsurface Transport Over Multiple Phases
TEDE	total effective dose equivalent
TEMPEST	Transient Energy Momentum and Pressure Equations Solutions in Three Dimensions
TOC	total organic carbon
TSD	treatment, storage and disposal
TSR	Technical Safety Requirement
TWA	time weighted average
TWRS	Tank Waste Remediation System
ULD	unit liter dose
USQ	Unreviewed Safety Question
USQD	Unreviewed Safety Question Determination
URSILLA	Ultrasonic Interface Level Analyzer

1.0 SITE CHARACTERISTICS

1.1 INTRODUCTION

The objective of this chapter is to describe any changes to the site characteristics of the Hanford Site provided in Appendix C of HNF-SD-WM-BIO-001, *Tank Waste Remediation System Basis for Interim Operation* (TWRS BIO) (LMHC 1997) due to the performance of the mixer pump test. Tank 241-AZ-101 is located in the Aging Waste Facility (AWF) of the Tank Waste Remediation System (TWRS) in the 200 East Area of the Hanford Site. See Chapter 2 of this addendum for the changes to the facility descriptions provided in Appendix B of the TWRS BIO and for the process descriptions of the mixer pump test.

It is not the intent of this chapter (including its references to the TWRS BIO) to provide all of the information suggested by the guidance of DOE-STD-3009-94. The objective of this chapter is to provide the information necessary to describe the facility's location, identify any hazards due to that location, and identify critical parameters used in Chapter 3 of this addendum.

1.2 REQUIREMENTS

See Appendix C, Section 1.2 of the TWRS BIO for the requirements for Hanford Site characterization in support of safety analysis and design. There are no changes to these requirements as a result of the performance of the mixer pump test.

1.3 SITE DESCRIPTION

See Appendix C, Section 1.3 of the TWRS BIO for the Hanford Site description. There are no changes to the site description as a result of the performance of the mixer pump test.

1.4 ENVIRONMENTAL DESCRIPTION

See Appendix C, Section 1.4 of the TWRS BIO for a discussion of the meteorology, hydrology, and geology of the Hanford Site. There are no changes to the environmental description as a result of performance of the mixer pump test. This data from the TWRS BIO is used to calculate radiological and toxicological impacts to receptors (onsite and offsite) from accident scenarios outlined in Chapter 3 of this addendum.

1.5 NATURAL PHENOMENA THREATS

See Appendix C, Section 1.5 of the TWRS BIO for a description of the natural phenomena threats. There are no changes to the natural phenomena threats as a result of performance of the mixer pump test.

1.6 EXTERNAL MAN-MADE THREATS

See Appendix C, Section 1.6 of the TWRS BIO for a description of the external man-made threats. There are no changes to the external man-made threats as a result of the performance of the mixer pump test.

1.7 NEARBY FACILITIES

See Appendix C, Section 1.7 of the TWRS BIO for a description of nearby facilities. There are no changes to the potential effects on Tank Waste Remediation System (TWRS) facilities from nearby facilities as a result of performance of the mixer pump test. Accidents associated with performance of the mixer pump test with the potential to affect the maximum onsite individual (which may include people at some of the facilities listed in Section 1.7.1 of Appendix C of the TWRS BIO) are discussed in Chapter 3 of this addendum.

1.8 VALIDITY OF EXISTING ENVIRONMENTAL ANALYSES

Project W-151 and the performance of the mixer pump test were evaluated by the U.S. Department of Energy, Richland Operations Office (RL) (Gerton 1990) and found to be within the scope of the existing Environmental Impact Statement (EIS) DOE-EIS-0113, "Disposal of Hanford Defense High-Level, Transuranic, and Tank Wastes." The site characteristics data are in agreement with the data contained in the TWRS Environmental Impact Statement (DOE-EIS-0189).

2.0 FACILITY DESCRIPTION

2.1 INTRODUCTION

The purpose of this chapter is to describe any changes to the description of the Tank Waste Remediation Systems (TWRS) Aging Waste Facility (AWF) provided in Section 2.4.4.1.1 of Appendix B of the *Tank Waste Remediation System Basis for Interim Operations* (TWRS BIO), HNF-SD-WM-BIO-001, due to the performance of the mixer pump test. The mixer pump test is similar in concept to previous mixer pump operations performed in Hanford waste tanks (Wicks 1997). However, the size and power of the mixer pumps used during this test will be considerably larger than those used in the past (300 hp vs. 75 hp), necessitating this safety analysis to be performed because of the increased thermal output and potential accident consequences. This chapter describes the process test to be performed in Tank 241-AZ-101. The facility and process descriptions (both in this chapter and the TWRS BIO) support the assumptions used in Chapter 3 of this addendum.

The scope of this document is limited to the performance of the mixer pump test. Unreviewed Safety Question Determinations (USQDs) TF-96-0018, TF-96-0461, TF-96-0448, and TF-96-0805 verified that the installation of the two mixer pumps, the in-tank camera system, the profile thermocouples, and the Ultrasonic Interface Level Analyzer (URSILLA), respectively, into Tank 241-AZ-101 were within the current TWRS authorization basis. USQD TF-96-1041 verified that checkout testing of the installed equipment was within the current TWRS authorization basis. Safety considerations associated with performance of the mixer pump test are evaluated by this BIO Addendum.

This document augments the current TWRS authorization basis. This document does not evaluate removal of the mixer pumps since no decision had been made regarding pump removal at the time that this BIO Addendum was approved. Safety considerations for removal of the pumps will be addressed by separate safety documentation if the decision is made to remove the pumps.

The mixer pump test has been evaluated to cover use of the existing ventilation system (241-A-702) or the ventilation system upgrade provided by Project W-030. Analysis of Project W-030 is outside of the scope of this document and is addressed in BIO Addendum 3. Should the Project W-030 ventilation system upgrade be in service at the time of the mixer pump test, BIO Addendum 3 will have been approved and made available as a referenceable source for additional information on the W-030 ventilation system equipment and safety analyses. The hazard and accident analysis within this BIO Addendum is limited to the scope and impact of the mixer pump test, and therefore, does not address hazards already addressed within the current authorization basis and not related to or affected by the mixer pump test.

The mixer pump test will use two high-capacity mixer pumps to demonstrate solids mobilization on Hanford waste in Tank 241-AZ-101 (Figure 2-1 of this addendum). The information and experience gained during the test will provide data for comparison with sludge mobilization prediction models; provide data to estimate the number, location and cycle times of the mixer pumps; and provide indication of the effects of mixer pump operation on the AWF Tank

systems and components. The slurry produced will be evaluated for future pretreatment processing. This process test does not transfer waste from or to the tank; the waste is mixed and confined within the existing system. At the completion of the mixer pump test; Tank Farm Operations will stop the mixer pumps and resume normal tank operations, maintenance and surveillance. Periodic rotation of the mixer pumps and motor shafts, along with bearing greasing, is required to maintain the pumps following the mixer pump test. The test is equivalent to any maintenance testing of pumping equipment, and provides a gradual operation of the system to determine maximum and minimum effectiveness.

2.2 REQUIREMENTS

See Project W-151 Functional Design Criteria (FDC) (Nordquist 1997), which has been approved by the U.S. Department of Energy, Richland Operations Office (RL) for identification of design codes, standards, regulations, and the U.S. Department of Energy (DOE) orders relevant to the design and construction of Project W-151.

2.3 FACILITY OVERVIEW

Project W-151 and the mixer pump test do not impact the currently defined mission of the TWRS facilities or the basic processes in use, as defined in Section 2.3.1 of Appendix B of the TWRS BIO. The following discussion is limited to providing information applicable to Project W-151 and the mixer pump test. Information provided here consists of any and all changes to the Aging Waste Facility (AWF) configuration and process description provided in Appendix B of the TWRS BIO.

The AWF tanks currently contain a mixture of liquid and sludge with both radioactive and hazardous compounds. The current waste inventory for Tank 241-AZ-101 is presented in Hodgson 1995. The current heat generation rate associated with Tank 241-AZ-101, without the mixer pumps, is 70,806 W (241,600 Btu/h) (Hodgson 1995). The 300 hp mixer pumps have a thermal input to the waste of 201,000 W (687,000 Btu/h) each (Nordquist 1997), resulting in a total heat load for the tank, with both mixer pumps, of 472,806 W (1,613,000 Btu/h).

2.4 FACILITY STRUCTURE

The following discussion is limited to providing information applicable to mixer pump test equipment. Information provided here consists of any and all changes to the AWF equipment description provided in Appendix B, Sections 2.4.3 and 2.4.4 of the TWRS BIO.

Figure 2-1 of this addendum provides a top-view of the tank and locates the mixer pumps and temperature monitoring equipment within the tank provided by Project W-151. See Appendix B of the TWRS BIO for additional information on AWF tank temperature monitoring equipment.

A brief listing of the characteristics of each mixer pump is provided in Table 2-1 of this addendum. Additional pump information is provided in Nordquist 1997, and WHC 1996a and WHC 1996b. The following is an excerpt from Nordquist 1997: "Each mixer pump shall take in fluid from the tank bottom and discharge the fluid horizontally through two opposing nozzles located 12 to 18 inches above the tank bottom. The nozzle assembly shall oscillate rotationally (180 °) or rotate 360 ° at 0.05 to 0.2 rpm to sweep the entire projected area of the tank bottom." The two mixer pumps are installed in Tank 241-AZ-101 through existing 1.1 m (42-in.) risers in the tank (see Figure 2-2 of this addendum). The mixer pumps are driven by 300 hp induction motors and rotation of the whole assembly is performed by 1/3 hp induction motors with a 900:1 gear reduction. The design life of the individual mixer pump components is five years or 44,000 hours. The design life of the permanent modifications of Tank 241-AZ-101 and non-replacement ancillary and support equipment is consistent with the remainder of the 50-year design life of the 241-AZ tank farm, which was completed in 1976. Replaceable equipment and components may have a shorter design life, but generally not less than five years.

Analysis of pump-to-pump interaction has been completed in the vendor supplied information (Nordquist 1996). Pump effects, which included the effects of pump operational and environmental conditions, were found to be much greater on the smaller equipment already existing in the tank than for pump-to-pump interaction.

To determine the effects of pump operation on in-tank equipment, structural analyses were performed. Waters and Heimberger 1993 states that for the small number of cycles involved, the stress levels on in-tank components (including the air lift circulators [ALCs]) are well below the allowable limits. Additional analysis (Julyk 1997) states there is a potential for some damage to the thermocouples attached to the ALCs (not safety related equipment) if there are agglomerations of hardened sludge adhering to the thermocouples. Tank 241-AZ-101 has 22 ALCs used to establish convective currents within the tank's supernatant region, and to some degree, mobilize the sludge which settles to the bottom of the tank. During the mixer pump test, the ALCs will be left off as much as possible to determine the effectiveness of the mixer pumps. For the steam coil installed in Tank 241-AZ-101, an analysis was performed to determine the allowable number of stress cycles that could be withstood to support mixer pump operation at the steam coil's current location (Crass 1996). The number of stress cycles are determined by multiplying the mixer pump's rotational speed (the speed at which the entire mixer pump unit rotates about its vertical axis in the oscillating mode) by the time of the mixer pump operation. The rotational speed of the mixer pump assembly, including the casing, is relatively slow as compared to the pump impeller speeds (0.05 to 0.2 rpm, as compared to 1,200 rpm). Initially, it was thought that the steam coil would have to be raised out of the path of pump discharge. However, at the current location of the steam coil (approximately 53 cm [21-in.] from the tank bottom), the allowable stress cycles are 200,000. These 200,000 stress cycles at a rotational speed of 0.1 rpm translates to 16,600 hours. At a maximum rotational speed of 0.2 rpm the pumps can safely operate for 160,000 cycles or 6,650 hours (Crass 1996) versus a test duration of approximately 1,300 hours.

In addition, the potential for pump operation to result in erosion of the tank liner is addressed in Section 3.4.2.3.4 of this addendum. Erosion of in-tank equipment is considered to be bounded by that of the tank liner analysis. Erosion of in-tank equipment will not affect equipment operability and therefore is considered acceptable for the duration of the test.

Mixer pump system components and assemblies located at or within the double-shell tank (DST) are designed to withstand the anticipated radiation environment as specified in Nordquist 1997. In addition, mixer pump system components and assemblies that will contact the waste are compatible with the waste fluid properties present in the tank as specified in Nordquist 1997. Those in-tank parts of the mixer pumps and other in-tank equipment submerged in the liquid may potentially be exposed to waste at temperatures from 40 °C to 100 °C (104 °F to 212 °F) during normal operations.

2.5 PROCESS DESCRIPTION

Other than the addition of the mixer pumps, Project W-151 and the mixer pump test do not impact the facility's currently defined mission or the basic processes in use. This section describes the mixer pump test.

2.5.1 Mixer Pump Testing

Tank 241-AZ-101 has been selected for the first full-scale demonstration testing of a mixer pump system. The tank currently holds over 3.63 ML (960 Kgal) of neutralized current acid waste, including approximately 31.8 cm (12.7 in) of settling solids (sludge) at the bottom of the tank (Hodgson 1995).

The mixer pump test goals are to provide actual in-tank operations of mixer pumps, effectively mobilize solids within the supernatant, provide empirical data for determination of the mixer pump effective cleaning radius (distance out from pump discharge at which the effectiveness of the pump in mobilizing tank solids significantly decreases), and provide further justification for use of mixer pumps on other DSTs. The mixer pump test may consist of three pump configuration phases, including:

- Single Pump - Fixed Mode
- Single Pump - Oscillating Mode
- Two Pumps - Oscillating Mode.

In addition to the pumping or mixing modes, two other tank conditions during the mixer pump test are considered in this BIO Addendum and discussed as "modes":

- Pump Shutdown - Initial Waste Settling Phase (up to one month)
- Long-Term Re-compaction of solids (up to one year).

The mixer pumps are designed to operate in a fixed position (fixed mode during the single pump portion of the test) or to continuously oscillate from ± 180 ° to 0 ° (oscillating mode). In the oscillating mode, the effective rotation rate of the jet nozzles will be operated from 0.05 rpm to 0.2 rpm during the mixer pump test. Testing will also initially include slowly increasing from 700 rpm to 1,200 rpm instead of increasing directly to full power in order to evaluate the accuracy of modeling conclusions. The duration of each of the modes is contingent on the success (or lack thereof) of sludge mobilization. Within each accident analysis in Chapter 3 of this addendum, the worst case mode was chosen for evaluation. It is expected that a reasonable duration of mixing to achieve maximum mobilization is from 10 to 20 days (Symons and Staehr 1996). Due to a loss of mixer pump test data, the mixer pumps will be turned off whenever all of the air lift circulators are running.

2.6 CONFINEMENT SYSTEMS

The mixer pump test was analyzed to cover the use of either the ventilation system upgrade provided by Project W-030 or the 241-A-702 ventilation system. The current ventilation system for Tank 241-AZ-101 is the 241-A-702 AWF ventilation system described in Appendix B, Section 2.4.3.7.1 of the TWRS BIO (Figure 2-2 of this addendum). However, Project W-030 will provide a ventilation system upgrade for the AWF (which includes Tank 241-AZ-101) as described in BIO Addendum 3. Since there is uncertainty about which of these ventilation systems will be operational during the mixer pump test, the safety analyses provided in this document evaluate both ventilation systems and the accident consequences were considered for the bounding case condition. Either ventilation system can remove the calculated heat load for bulk waste temperatures (Sathyanarayana 1994, Rice 1992a, Rice 1992b, Collins 1992) for mixer pump operation (see Table 2-2 and Section 3.4.2.2 of this addendum for additional information).

2.6.1 241-AY and 241-AZ (Aging Waste Facility) Tank Farm Ventilation System - Project W-030

See BIO Addendum 3, as well as Figures 2-3, 2-4, and 2-5 of this addendum for a description of the Project W-030 ventilation system. There are no changes to this ventilation system as a result of performance of the mixer pump test.

2.6.2 241-AY and 241-AZ (Aging Waste Facility) Tank Farm Ventilation System - 241-A-702

See Appendix B, Section 2.4.3.7.1 of the TWRS BIO, and Figure 2-6 of this addendum for a description of the 241-A-702 AWF ventilation system. There are no changes to this ventilation system as a result of the operation of the mixer pump test.

2.6.3 Annulus Exhaust Flow Description

See Appendix B, Section 2.4.3.7.1 of the TWRS BIO, and Figure 2-7 of this addendum for a description of the AWF annulus ventilation system. There are no changes to this ventilation system as a result of operation of the mixer pump test. Currently, the annulus exhauster is non-operational, and the conservative assumption has been made for the thermal analyses of Chapter 3 of this addendum that it will remain unavailable during the mixer pump test. Should it be returned to service prior to the mixer pump test, additional tank cooling would be provided by the system, and all tank thermal margins to operational and safety limits would be increased.

2.7 SAFETY SUPPORT SYSTEMS

Existing equipment in Tank 241-AZ-101 monitors and records selected parameters during the mixer pump test. The following describes (1) the appropriate section of the TWRS BIO where descriptions of the existing equipment may be located, and (2) the Tank 241-AZ-101 mixer pump system equipment.

2.7.1 Existing Equipment

See Section 2.4.11 of Appendix B of the TWRS BIO for a description of the existing equipment within Tank 241-AZ-101 which will be used to monitor and record parameters during the mixer pump test. Any changes or additional cautions involved with using this equipment during the mixer pump test are discussed below.

2.7.1.1 Liquid Level Measurement System. During the mixer pump test, liquid level measurement will be taken either manually using a tape or by using an ENRAF(TM) gauge to comply with TWRS TSR Limiting Condition for Operation (LCO) 3.3.4, "Air Lift Circulators (ALCs)." Caution is to be taken during mixer pump operation because the ENRAF(TM) liquid level detector could be damaged when lowered into the tank during mixer pump operation. The ENRAF(TM) liquid level is a micro-processor-controlled tank gauge which accurately measures the liquid level. During testing, liquid level measurement with an ENRAF(TM) gauge will be taken when the mixer pump(s) is off, or by other means (e.g., manual tape). For the mixer pump test, level data will be measured and manually logged.

2.7.1.2 Temperature Monitoring. Temperature monitoring in the waste tanks is required to maintain tank operating conditions. For the mixer pump test, as described in the mixer pump test plan (Symons and Staehr 1996), the temperature data, collected and analyzed, provides information about the waste temperature within the tank before, during and after the mixer pump test. This system provides one method of identifying any potential localized "hot spots" leading to tank bump conditions (refer to Section 3.4.2.2 of this addendum).

In accordance with Symons and Staehr 1996, the tank bottom thermocouples, profile thermocouples, air lift circulator thermocouples, and sludge

thermocouples may be used to monitor the growth of the effective cleaning radius area when the mixer pumps are operating. The thermocouple data will be monitored before, during, and after pump operation. See Section 2.4.11.4.2 of Appendix B of the TWRS BIO for a description of AWF tank temperature monitoring equipment and locations.

Several different temperatures relating to the mixer pump test and Tank 241-AZ-101 are to be used throughout this BIO Addendum. Some of these temperatures result from predicted temperature responses of the waste to the mixer pump action, some relate to saturation temperatures of the tank solids, supernate, or mixed slurry, and some relate to design and/or safety limits. For clarity, Table 2-3 of this addendum is provided to outline all of these temperatures.

2.7.1.3 Hydrogen Monitoring. Monitoring requirements for flammable gas accumulation in tank headspace are specified in the TWRS TSR AC 5.11. A Standard Hydrogen Monitoring System (SHMS) cabinet has been installed on Tank 241-AZ-101, which will be used to take hydrogen concentration readings, as required, during the testing. Data from the SHMS will be recorded manually, as specified in Symons and Staehr 1996.

2.7.1.4 Tank Pressure Monitoring. The pressure/vacuum within the 241-AZ-101 primary tank (i.e., vapor space) is continuously monitored as discussed in Section 2.4.11.7 of Appendix B of the TWRS BIO.

2.7.1.5 Air Lift Circulator System. The air lift circulator system consists of air lift circulators (ALCs) in each of the aging waste tanks and a compressed air system. The compressed air system provides process air to operate the ALCs. Instrument air is also generated to operate critical valves on the 702-A ventilation system. The compressed air system includes the following items:

- Air lift circulators
- Piping between the compressor building and the individual tanks
- Air receiver (TK-801)
- Air accumulator for instrument air (TK-802)
- Portable separator and dryer
- Permanent duplicate sets of air separators and dryers
- Permanent air compressors
- Portable diesel air compressor.

2.7.1.5.1 Air Lift Circulators. The air lift circulator system is composed of the process air (described above) and 22 air lift circulators (ALCs) in each of the 241-AY and 241-AZ Tanks. See Section 2.4.4.1.1 of the TWRS BIO Appendix B for a brief general description of the ALCs. Additional ALC system details are provided below.

The ALCs are relatively simple devices consisting of two basic components: a vertical lift riser pipe 76 cm (30-in.) in diameter, and a foot piece (air nozzle) located within and near the lower end. A 15 cm (6-in.) pipe suspends the lift riser from the tank dome and concentrically extends to a 3.8 cm (1.5-in.) inner diameter nipple. A 2.5 cm (1-in.) pipe, which supplies the motive air, is a removable insert that extends within the 15 cm (6-in) pipe to 5 cm (2-in.) below the swaged nipple. This is the one component which can be replaced in the event of a plug. The entire unit is of mild steel construction. The lower ends of all the lift risers are 76 cm (30-in) above the tank bottom.

Air is injected into the lift riser at the foot of the air lift, draws in liquid from the bottom of the tank, and pushes the fluids up the circulator and out the top. The large liquid flow rates generated with the circulators will create turbulent flow in the tank contents. Liquids flowing along the bottom of the tank and up the draft tubes will carry solid particles out the top of the circulator as they are discharged in the upper region of the tank. The vertical fluid motion decreases the temperature differential between the top and bottom of the tank by transporting warm liquids and solids from the bottom of the tank to the cooler regions at the top. A computer analysis of the adequacy of the circulator capabilities for suspending and mixing was made by Pacific Northwest Laboratory (Fineman 1984). This analysis compiles several modeling reports which show the air lift circulators are capable of keeping the solids suspended and maintaining a more even temperature distribution, preventing tank bumps (see Section 3.4.2.2 of this addendum).

2.7.1.5.2 Air Compressor Building. Process and instrument air is supplied to the 241-AY and 241-AZ Tank Farms from the 241-A-701 Compressor Building. The 241-A-701 Building compressed air system was upgraded from late 1993 to 1995. It contains two Ingersoll-Rand glycol/water cooled electric air compressors. Each compressor is powered by a 125 hp electric motor and will supply about 2.1×10^{-1} m^3/s (440 cubic feet per minute [CFM]) at 1.0 MPa (150 lbf/in^2 gauge). Normally one compressor will be operated, and the other acts as a backup. They will be rotated to ensure that they have about the same amount of use and that they remain operable. A dedicated portable diesel driven air compressor is available at the Compressor Building as backup. A portable air separator and air dryer system is available (in use) outside of 241-A-701 building.

Air from the compressors passes through a cooler and separator to remove moisture and droplets. The air goes to an air receiver tank located behind 241-A-701. For instrument air, the air is routed through a separator and air dryer to further remove water droplets, particulates, and vapors. For process air, these dryers and filters are bypassed.

Process air is reduced to 0.3 MPa (41 lbf/in^2 gauge) through a pressure reducing valve and then one 7.6 cm (3-in.) line is routed to the 241-AX, AY, and AZ tank farms. Process air is piped to the 801 buildings in the 241-AZ and 241-AY Tank Farms. Another pipeline leaves the Compressor Building to the 241-A tank farm.

Instrument air from 241-A-701 is routed to an air accumulator, reduced in pressure to 0.2 MPa (35 lbf/in^2 gauge) and then to the 241-A-702 ventilation

building. Instrument air is routed to 241-AX, AY and AZ farms through a 2.5 cm (1-in.) line.

Rotameters located in the 241-AY-801A and 241-AZ-801A Instrument Buildings are used to indicate the air flow rate to the individual circulators. An adjoining raw water header (and associated valves) are provided at these locations for water flushing of the ALC lines. Connections are available for the emergency diesel air compressor at the air headers in the 241-AY-801A and 241-AZ-801A buildings, if required.

2.7.2 Tank 241-AZ-101 Mixer Pump System Equipment

The process control system for the mixer pump test consists of:

- Pump column water pressure normal and low indicators
- Pump column supply filter normal and high indicators
- Motor bearing high temperature alarm, and motor bearing maximum temperature alarm and interlock
- Motor winding maximum temperature alarm and interlock
- High pump current alarm, and maximum pump current alarm and interlock.

In addition, the mixer pump test will use three existing safety control systems in support of process control. These existing systems are:

- Tank vapor pressure alarm and tank low vacuum alarms
- Maximum tank temperature alarm
- Tank liquid level minimum, absolute minimum, and maximum alarms

The mixer pump motors and connections are above tank farm grade (i.e., in an area without direct connection or exposure to tank headspace) and contain no accumulation areas for flammable gas buildup around the motors. To provide cooling and lubrication, the mixer pump line shaft bearings are enclosed in a water column, which also prevents sparking. In addition, the volute and impeller are 304 stainless steel and the process bearing is submerged in the waste, which prevent sparks (Crass 1993).

As noted in Section 2.5 of this addendum, the mixer pumps are being started slowly as part of the mixer pump process test. This will serve as a preventive measure against a sudden gas release, although gas pockets within the sludge are not expected (Hodgson 1996). In addition, the mixer pump test procedure (Ross 1997) contains requirements to comply with the flammable gas requirements of the TWRS BIO and TSRs (AC 5.9, 5.10, and 5.11). Prior to startup of a mixer pump or change in the mixing test mode, the tank's exhaust or headspace must be sampled for flammable gas to verify it to be <25% of the lower flammability limit (LFL) (see TWRS TSR AC 5.11).

The waste profile thermocouples and transfer pump are carbon steel and are installed in carbon steel risers. Normally, there is no movement of any of these pieces of equipment. However, due to mixer pump operation, they may sway (Waters and Heimberger 1993). The flammable gas hazard has been evaluated in Chapter 3, Section 3.4.2.3.1 of this addendum.

A closed-circuit television system, with videocassette recorder capabilities, will be installed in the tank headspace and will be monitored for information purposes to determine whether any in-tank equipment has been damaged or is being damaged by the mixer pumps. The use of the camera has been determined to be a prudent measure for defense-in-depth. (Analyses have shown safety equipment to be within allowable stress margins, though Julyk 1997 recommended that the ALCs be monitored by camera to avoid flow-induced resonant vibration coupling for more than a duration of one hour. Julyk 1997 also states that resonant coupling is not likely in the tank because of the non-uniform nature of the flow patterns.) It is intended that the closed-circuit television be operated during the entire mixer pump test. But, if the functionality of the camera is lost during the mixer pump test, the test may be continued, once the reason for the camera failure has been determined, since the camera is not needed to fulfill a safety function.

The surveillance camera is housed in a stainless steel, purged enclosure. This enclosure is designed, in accordance with the requirements of TWRS TSR flammable gas controls (AC 5.9, 5.10, and 5.11) and approved by the Flammable Gas Equipment Advisory Board (Smet 1997), to provide a continuously isolated (purged and pressurized) environment for a potentially sparking camera system (either the electronics of the camera itself or the direct current pan and tilt motor for the unit) from a potentially flammable gas environment. Upon loss of purge, the in-tank camera equipment will shut down automatically, deenergizing the system and stopping all sparking potential.

Two gamma profilers may be installed in existing drywell locations to help determine the mixer pump effective cleaning radius during the test and the degree of solids distribution within the supernatant. These pieces of equipment are manually operated (i.e., raised and lowered in the drywell manually) and the readings may be taken during mixer pump operation. The flammable gas administrative controls of the TWRS BIO and TSRs require that the drywells be checked for flammable gas accumulation to ensure integrity of the well on a monthly basis. The housing of the profilers are made from stainless steel and all electrical connections are above tank farm grade (i.e., in an area without direct connection or exposure to tank headspace).

Strain gauges installed on the profile thermocouple trees will monitor the impingement jet force from the mixer pump. The strain gauges are used while the mixer pumps are in operation. The collected data will be measured and stored in a personal computer data spreadsheet program, maintained by the operators. The strain gauges on the profile thermocouple trees are non-sparking during normal operation and all electrical connections are above tank farm grade (i.e., in an area without direct connection or exposure to tank headspace). The strain gauges are also isolated from the tank's vapor space with a welded cover.

Vibration of the mixer pump assembly will be measured by the use of a vibration switch mounted to the pump motor, which is preset to provide indication, should vibrations exceed vibration set-points.

The ultrasonic interface level analyzer (URSILLA) (Royce Model 2511) system consists of three individual units that use an ultrasonic ranging technique to measure the depth of the sludge interfaces within the supernatant. The URSILLA will be operated continuously, and collected data measured and stored in a personal computer data spreadsheet program, maintained by the test engineers. The URSILLA's sensors will be located approximately 4.5 m (15 ft) off the tank bottom, and will be housed and sealed from the tank's atmosphere and waste in 5.1-cm dia (2-in) stainless steel housings and all electrical connections are above tank farm grade (i.e., in an area without direct connection or exposure to tank headspace). The three units provide a high degree of redundancy for process data. The mixer pump test plan only requires two of the three units to be operational during the mixer pump test.

Instrumentation monitors the following:

- Mixer pump motor and bearing temperature
- Pressure readings on pump bearing/seal lubrication water pressure
- Electrical parameters including current, voltage, and frequency
- Rotary position to determine pump orientation
- Bending of selected in-tank equipment through the use of strain gauges (Figure 2-1 of this addendum).

2.8 UTILITY DISTRIBUTION SYSTEMS

Utility distribution systems impacted by Project W-151 include the following:

- Water Supply Systems and
- Electrical Power Distribution System.

2.8.1 Water Supply Systems

All water for the 200 East Area is supplied from the Hanford Site export water system. Export water is defined as water that is pumped from the Hanford Site reservoir to reservoirs located in the 200 East and West areas. Water is distributed throughout the area by two separate systems, the raw water system and the sanitary water system. Raw water is untreated, and unchlorinated, and is used principally for cooling, flushing, and dilution systems. Sanitary water is treated (filtered, purified, etc.) and used for drinking and sanitary facilities, process, and fire protection.

For Project W-151, raw water is provided for mixer pump mechanical seals and bearings. Heat trace of the water piping from the raw water connection to the mixer pump is provided. Flushing of the mixer pump for decontamination during potential failed equipment removal and replacement would be provided by tanker-supplied hot water from the power house.

2.8.2 Electric Power Systems

An electrical substation and pump control facility was installed for Project W-151. The substation replaced the previous transformer (C8-S27) and, in addition to the existing C8-S27 loads, has the capacity to supply power for the two mixer pumps and associated equipment.

2.9 AUXILIARY SYSTEMS AND SUPPORT FACILITIES

No systems or facilities other than those described in the previous sections of this addendum were identified as requiring descriptions in this document.

Figure 2-1. Top-view of Tank 241-AZ-101.

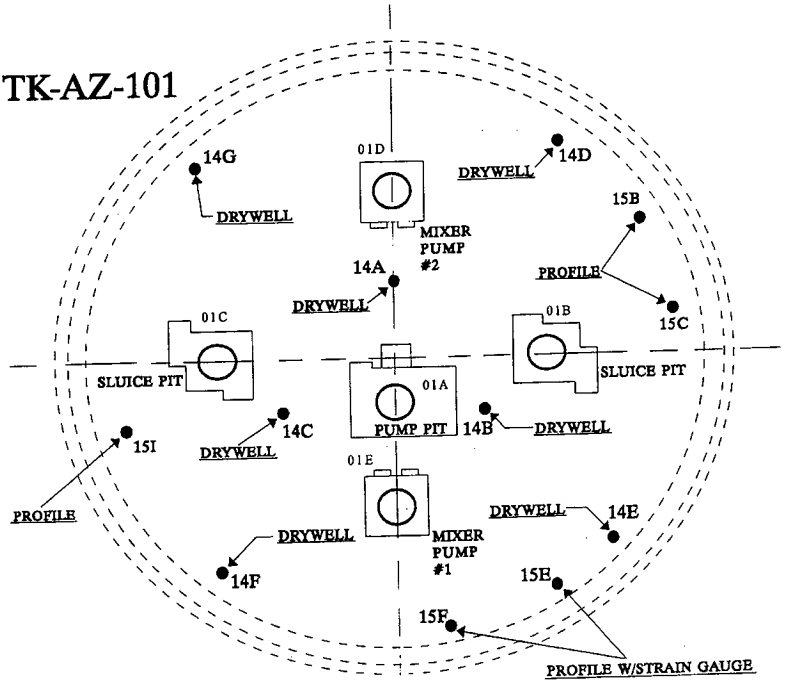

Note: "Profile" refers to the profile thermocouples present in the tank.

Figure 2-2. Mixer Pump Installation.

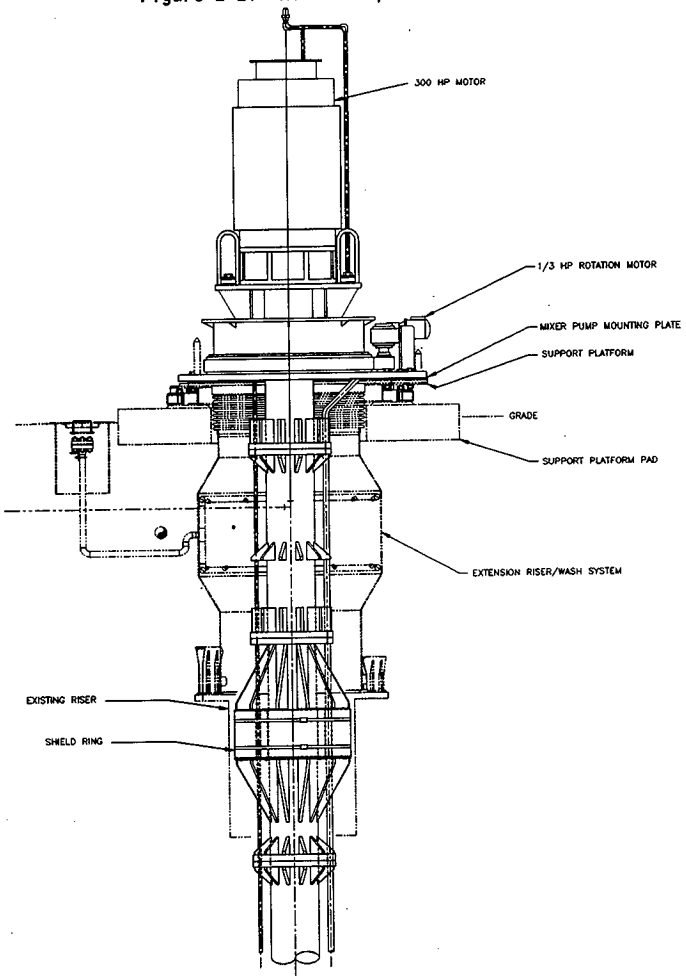

ELEVATION – MIXER PUMP INSTALLATION
SCALE: NONE

Figure 2-3. Project W-030 Ventilation Upgrade System.

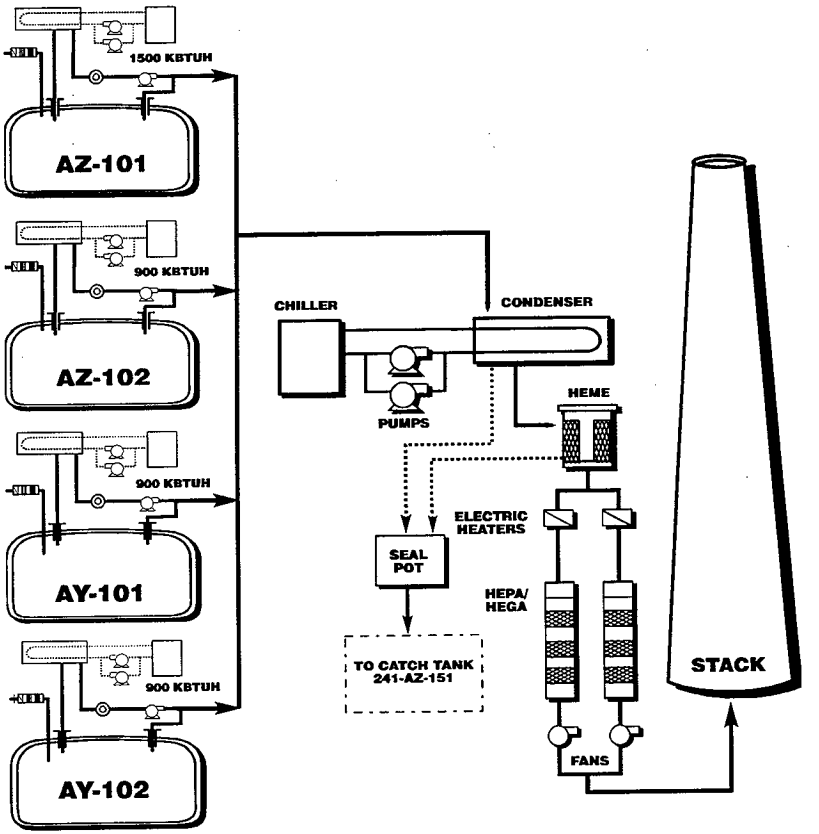

Figure 2-4. Project W-030 High Heat Flow.

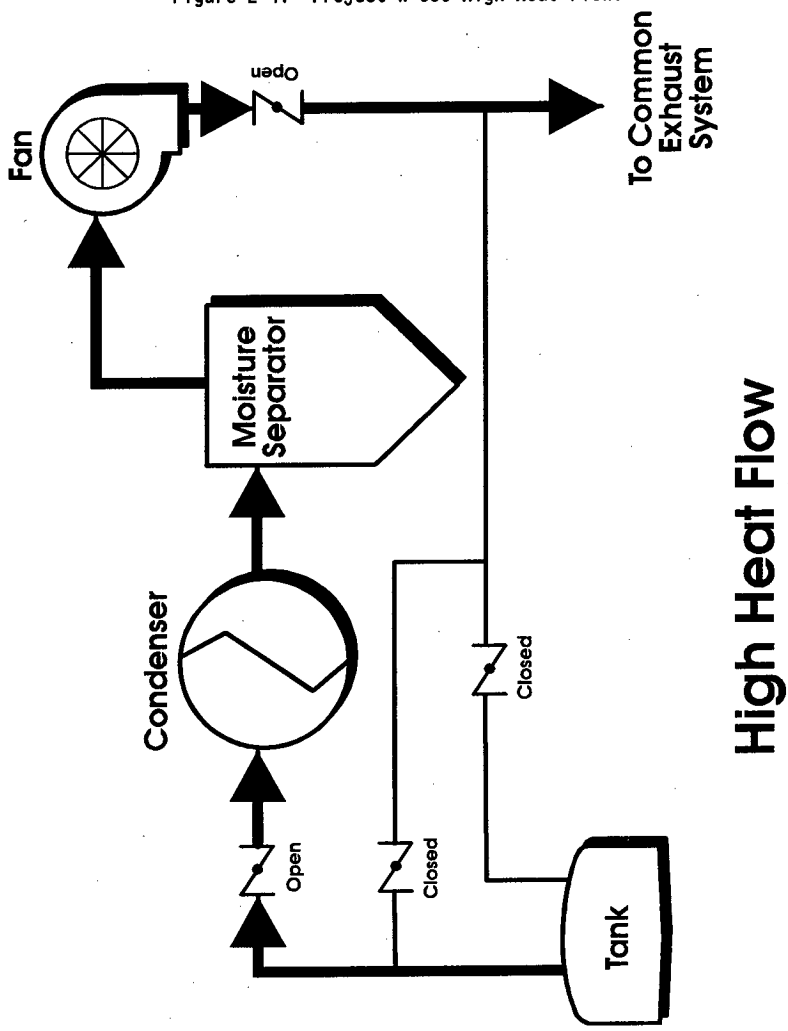

Figure 2-5. Project W-030 Recirculation System (Typical).

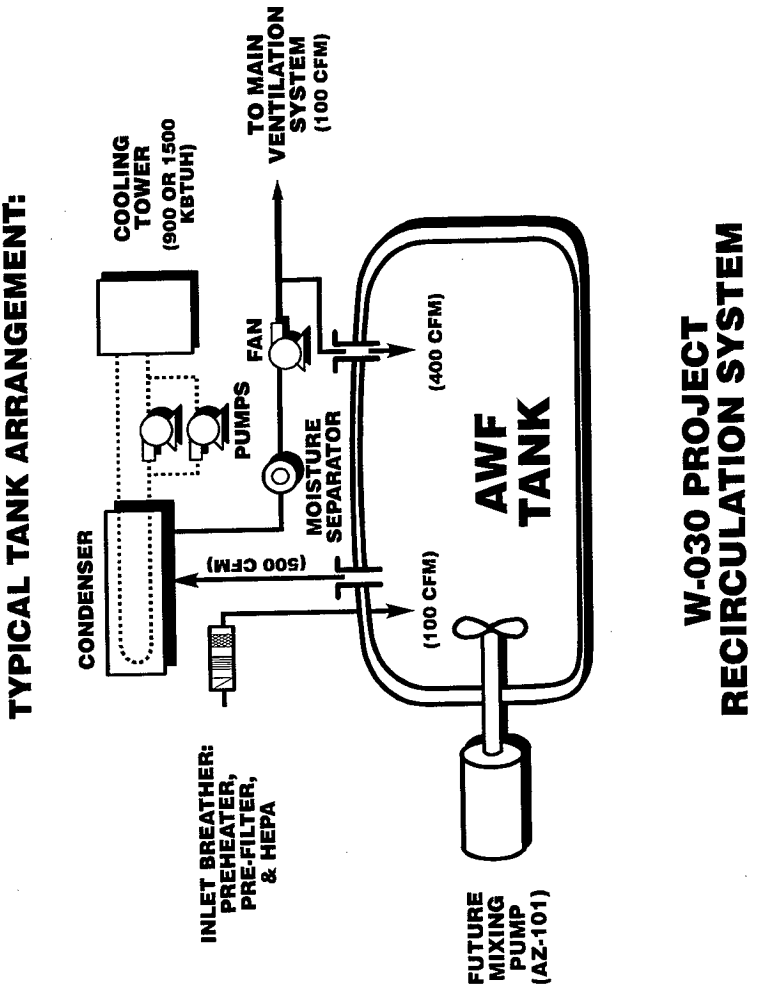

Figure 2-6. 241-A-702 Primary Ventilation System. (Aging Waste Facility)

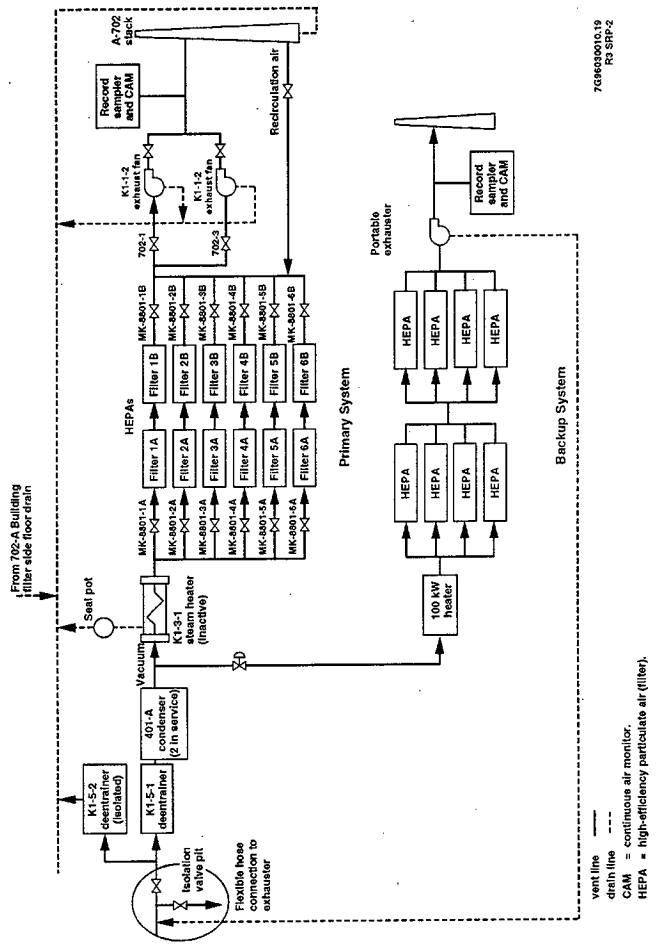

Figure 2-7. Annulus Ventilation System for 241-AZ Tank Farms. (Aging Waste Facility)

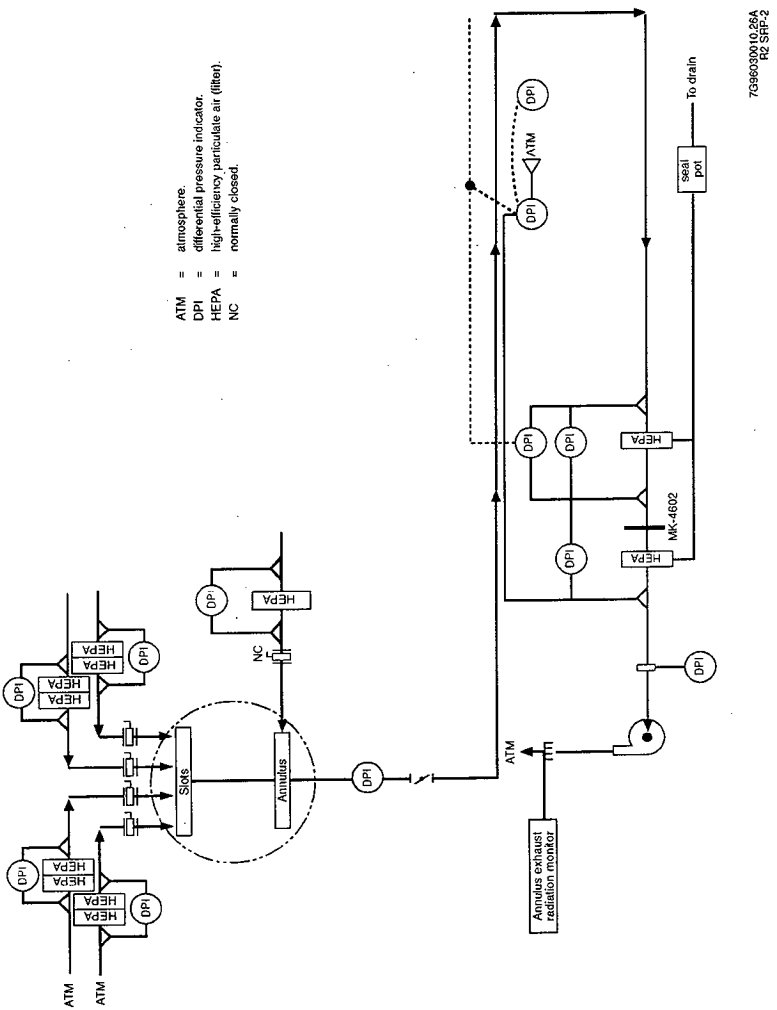

This page intentionally left blank.

Table 2-1. Project W-151 Mixer Pump Characteristics.

Pump type	Vertical line shaft drive mixer pump
Motor type	Induction-type, 300 hp, 1,200 rpm, 480V/3 Phase/60HZ weather-protected enclosure
Total pump weight	12,247 kg (27,000 lb) (water column filled)
Pump dimensions	17 m by 41 cm (56 ft by 16 in) (from support connection to bottom of the screen)
Number of jet nozzles	(2) 180 ° opposed
Diameter of each nozzle	15 cm (6 in)
Max Flow rate of each nozzle	19,680 L/minute (5,200 gpm)
(Velocity) x (nozzle diameter)	2.7 m^2/s (29.4 ft^2/s)
Jet flow direction	Horizontal
Nozzle centerline distribution above floor	43 cm (17 in.)
Pump rotation	Fixed, or 180 ° oscillating at 0.05 to 0.2 rpm

Table 2-2. Heat Generation and Removal.

241-AZ-101 Heat Generation without Mixer Pumps[1]	241-AZ-101 Heat Generation with one Mixer Pump	241-AZ-101 Heat Generation with two Mixer Pumps[2]	241-A-702 Heat Removal Capacity[3]	W-030 Ventilation System Heat Removal Capacity[4]
70,806 W (241,600 Btu/h)	271,806 W (928,600 Btu/h)	472,806 W (1,613,000 Btu/h)	1,172,284 W (4,000,000 Btu/h)	486,791 W (1,661,000 Btu/h)

[1] Hodgson 1995
[2] Nordquist 1997 (note, one pump heat load is a linear interpolation from none to two mixer pumps)
[3] Kronvall 1982
[4] Rice 1992b

Table 2-3. Mixer Pump Test Temperature Outline.

Pre-test Supernatant temperature in 241-AZ-101	146 °F
Pre-test Sludge temperature in 241-AZ-101	178 °F
Temperature at which the mixer pumps are turned off	≥195 °F top 15 feet of waste -or- ≥215 °F bottom 15 feet of waste
Temperature at which ALCs must be started	>190 °F average waste solution -and- >230 °F below 20 feet
Supernatant saturation temperature	220-230 °F
Sludge saturation temperature	255 °F
Safety limit maximum tank temperature to prevent organic nitrate reaction	250 °F
Temperature at which concrete degradation potential increases	300 °F

This page intentionally left blank.

3.0 HAZARD AND ACCIDENT ANALYSIS

3.1 INTRODUCTION

This chapter identifies and evaluates the hazards associated with the mixer pump test in Tank 241-AZ-101. In addition, it evaluates the consequences of potential accidents that could lead to a release of radioactive and hazardous materials. Potential consequences to the offsite public and onsite individuals are considered, as are the corresponding preventive and mitigative features. This chapter is limited to the scope and impact of the Tank 241-AZ-101 mixer pump test and therefore does not address all of the hazards analyzed and presented in the Tank Waste Remediation System (TWRS) Basis for Interim Operation (BIO), HNF-SD-WM-BIO-001 (LMHC 1997).

3.2 REQUIREMENTS

The standards and U.S. Department of Energy (DOE) Orders that are required for establishing the safety basis of the mixer pump test are listed below, and are consistent with those listed in Chapter 5 of the TWRS BIO. Only portions of these documents are relevant to this safety document; namely, those requirements pertinent to safety analysis.

- DOE 5480.22, *Technical Safety Requirements* (1992)
- DOE 5480.23, *Nuclear Safety Analysis Reports*, Change 1, (1994)
- DOE 6430.1A, *General Design Criteria* (1989)[1]
- DOE Standard 1027-92, *Hazard Categorization and Accident Analysis Techniques for Compliance with DOE Order 5480.23, Nuclear Safety Analysis Reports*
- DOE Standard 3009-94, *Preparation Guide for U.S. Department of Energy Nonreactor Nuclear Facility Safety Analysis Reports*
- DOE Standard 3011-94, *Guidance for Preparation of DOE-5480.22 (TSR) and DOE-5480.23 (SAR) Implementation Plans.*

[1]Non-safety related sections of DOE 6430.1A will be phased out/canceled upon meeting the implementation conditions of DOE O 430.1. The portions of DOE 6430.1A related to nuclear safety for non-reactor nuclear facilities are canceled by DOE O 420.1. As of this writing, the new orders have not been transmitted for compliance and therefore, compliance with DOE 6430.1A is required.

3.3 HAZARDS ANALYSIS

3.3.1 Methodology

The methodology used to perform this safety analysis is described in Section 5.2.1 of the TWRS BIO. The purpose of this safety analysis is to analyze the specific hazards related to the operation of two 300 hp mixer pumps in Tank 241-AZ-101 and also to assess the changes (i.e., assumptions and conclusions) in the current analysis due to the performance of the test.

The hazards analyzed were those identified in the Hazards and Operability (HazOp) effort presented in Appendix 3A enhanced by subsequent evaluation and comparison with hazards analyses performed for the TWRS BIO and Tanks 241-SY-101 and 241-AP-102 mixer pump additions (Section 3.3.2.4 of this addendum). Sabotage and terrorism are not included. Single and multiple failures (equipment and human errors) are considered as well as common-cause failures.

3.3.1.1 Hazard Identification. The hazard identification procedure used is consistent with that described in Section 5.2.1.1 of the TWRS BIO. Radiological hazards (excerpted from Table 5.3-4 of the TWRS BIO) are listed in Table 3-8 of this addendum, and toxicological hazards (excerpted from Table 5.3-6 of the TWRS BIO) are listed in Table 3-11 of this addendum.

3.3.1.2 Hazard Evaluation. The technique chosen for the mixer pump test hazards evaluation was the HazOp study which is the method used in the TWRS BIO. Additional analysis has been performed in conjunction with the BIO for non-operational hazards (for example, flammable gas) and the analysis is unchanged for the mixer pump test. Refer to the TWRS BIO Section 5.2.1.2.

3.3.1.3 Worker Health and Safety Requirements. This safety analysis addresses the risks to hypothetical onsite individuals at 100 m (330 ft) and to the public at the Site boundary, and provides for safety equipment and administrative controls to reduce such risks to within risk evaluation guidelines (see Tables 5.3-2 and 5.3-3 of the TWRS BIO). Included are the risks from radioactive materials, toxic gases, and toxic chemicals. The risk evaluation guidelines for the workers and the public are those defined in Tables 5.3-2 and 5.3-3 of the TWRS BIO (see Tables 3-3 and 3-4 of this addendum). The onsite receptor is assumed to be 100 m (330 ft) from the source of releases. This safety analysis does not specify any new controls necessary to protect workers who are located closer than 100 m (330 ft) to the activity. The current controls that protect workers during operations within 100 m (330 ft) are defined in the *Hanford Site Radiological Control Manual* (HSRCM-1 1995) and the *Tank Farm Health and Safety Plan* (HASP) (Hewitt 1996). The controls necessary to protect the workers against uncontrolled releases are documented in the TWRS BIO Section 5.4 and Chapter 5 of this addendum.

There is a potential for worker exposure to high concentrations of toxic gases during tank intrusive work around open tank risers or from emissions from the ventilation exhauster, including ammonia, nitrous oxide, and various organic species. Concentrations of these gases in the tank vapor space during the mixer pump operation work may be in excess of Occupational Safety and

Health Administration (OSHA)-allowed values. Because the tank vapor space will be exhausted to the ambient air above the tank, a pathway for worker exposure is recognized to exist. Assessment of the hazards from these materials and protection of the workers is provided as required by the HASP. Significant elements of this plan include monitoring of the work area for organic vapors, ammonia, and other chemical species whenever there is a potential for elevated employee exposure levels (i.e., above the established administrative action level defined by TWRS Industrial Health & Safety, which is one-half of the lower of either the Permissible Exposure Limit [PEL] or the Threshold Limit Value [TLV]). In addition, personnel monitoring is performed on those tasks which are judged to have the highest potential for exposure. The potential for elevated employee exposure is determined from a specific job hazards analysis performed on each work package prior to the work performed in the field, evaluating the potential levels of exposure from the baseline sample data available for the specific facility.

The Tank Farms are considered to be a Resource Conservation and Recovery Act (RCRA) Treatment, Storage and Disposal (TSD) facility, and all work in Tank Farms must comply with the HASP. The TWRS Industrial Hygiene staff has responsibility for implementation of the HASP, including monitoring and personnel sampling. Trained industrial hygiene technicians perform monitoring during each task. If any tank vapor levels are detected that present a possibility of employee over-exposure, the industrial hygiene technicians will take appropriate actions (as defined in the TWRS HASP), including the use of personal protective equipment or suspending the activity to ensure that no employee over-exposures occur.

It is important to note that the analysis addressing State Route 240 transient populations outlined at the beginning of TWRS BIO Section 5.3.2 is also applicable to the 241-AZ-101 mixer pump process test analysis.

3.3.2 Hazard Analysis Results

The following section presents and evaluates the results of the HazOp for the mixer pump test.

3.3.2.1 Hazard Identification. See TWRS BIO Section 5.2.2. There are no new hazards presented by the mixer pump test. See Table 3-8 of this addendum for the radionuclide hazards and Table 3-11 of this addendum for the toxicological hazards which are tables excerpted from the TWRS BIO, Tables 5.3-4 and 5.3-6 respectively.

3.3.2.2 Hazard Classification. The hazard category, as defined in DOE-STD-1027-92 for Tank 241-AZ-101, which is a Double-Shell Aging Waste Tank, has been determined to be Category 2 (Table 5.1-1 in the TWRS BIO). Since the mixer pump test does not segment the facility, change the type or form of waste being stored within the tank, and does not change its location (other than mobilizing the waste within the tank), the hazard classification remains Category 2.

3.3.2.3 Hazard Evaluation. The hazards evaluated in the TWRS BIO were re-evaluated for potential changes as a result of the mixer pump test.

Results of the HazOp (Appendix 3A of this document) were also considered during this re-evaluation and subsequent accident selection.

3.3.2.4 Accident Selection. The results of the HazOp are a number of postulated abnormal events that are ranked with respect to severity and frequency of occurrence. The Event Severity Index and Event Frequency Index are provided in Tables 3A-2 and 3A-3, respectively, of Appendix 3A of this addendum. These tables are reproduced in this section, as Tables 3-1 and 3-2.

The complete product of the HazOp study is presented as a series of tables (Appendix 3A of this addendum) showing the results of the study.

Using the HazOp evaluation techniques, a Hazard Analysis Summary table (Appendix 3B of this addendum) was constructed. Hazard Analysis Summary tables have been used to compile the results of the hazard identification and evaluation process for this test. Each column in the hazard tables is described below.

Event Number. Sequential identification for the hazard or accident evaluated.

Event Category. Event category descriptor.

Postulated Event Description. Details on how the hazard or accident can occur.

Significant Causes or Energy Sources. Hazard or accident initiators.

Receptor. Identifies the affected party (facility worker, onsite worker, public).

Credited Prevention. Engineered or administrative features that would prevent or reduce the probability of the hazard/accident from occurring.

Event Frequency. The qualitative or semi-quantitative assessment of the frequency of occurrence of the hazard/accident with and without preventive features.

Credited mitigation. Engineered or administrative features that would mitigate or reduce the consequences of the hazard/accident.

Consequences. The qualitative or semi-quantitative assessment of the consequences of the hazard/accident with and without mitigative features.

Risk Bin Number. Risk number based on the frequency, the consequences, and the receptor. This number, as used in the HazOp, was an arbitrary numbering system to gather together accidents of similar risk.

Defense-in-Depth Controls. Preventive and mitigative features not credited in the accident analyses.

HazOp study estimates were made for the likelihood of occurrence (frequency) for each accident shown in the HazOp study tables. There are

four frequency categories. Also shown are four severity categories. These categories were used along with common release mechanisms to categorize or bin accidents with common attributes (i.e., accidents that would benefit from the same control and protection strategy). Bin numbers were generated during the HazOp as an arbitrary method of gathering together accidents of similar risk potential, and are shown on the HazOp study tables.

An accident scenario was developed which bounds all common attribute accidents assigned to a bin. Only those accidents with a severity category of S3 and S2 were selected for further accident analysis (Section 5.2.1.3 "Accident Selection" in the TWRS BIO). The accidents appearing in these categories for further analysis were grouped according to release mechanisms that could result in dispersal of contaminants to an occupied area of the facility, and/or to the onsite and/or offsite receptor. Six bins were identified and therefore, six bounding (candidate) accident scenarios were developed from the HazOp.

The HazOp study detailed in Appendix 3A resulted in the identification of six postulated events which were binned from all the postulated accidents. These events and their related causes and conditions are identified in Appendix 3B. These six postulated events are: (1) a ventilation system High Efficiency Particulate Air (HEPA) filter failure, (2) backflow through open tank risers, (3) leakage via failed vent ducting, (4) a breach of the tank due to internal or external mechanisms, (5) a nuclear criticality induced by mixer pump operations, and (6) a seismic event.

The next step in the accident selection process involved an evaluation of the specific causes and conditions associated with the postulated events. Using the results of the HazOp as a starting point, and evaluating the events identified with the analyses of the BIO and other analyses performed in support of the similar mixer pump additions to Tanks 241-SY-101 and 241-AP-102 (though these pumps are smaller than the 241-AZ-101 mixer pump, many of the hazards are the same), a reconciliation was performed between the HazOp and these other analyses to arrive at an integrated set of design basis accidents (using updated information from these later analyses to update the results of the HazOp). The HazOp and Hazards Evaluation Tables are included for historical reference. This evaluation identified causes and conditions related and not related to the mixer pump test. Postulated events that involve causes and conditions not related to the mixer pump test are not analyzed. In addition, postulated events bounded by similar accidents are not analyzed. For example, leakage via failed vent ducting is not analyzed since the causes of this accident are not related to the mixer pump test and the accident is bounded by the HEPA filter failure.

This evaluation process resulted in the identification of four design basis accidents requiring further analysis: (1) unfiltered release of radionuclides and toxic aerosols from the tank, (2) tank bump, (3) breach of containment, and (4) over-pressurization caused by criticality. The unfiltered release includes an evaluation of HEPA filter failure and reverse flow through the tank.

The tank bump accident scenario is considered separately from the unfiltered release. The breach of containment accident scenario includes many

causes and conditions, with the most significant being flammable gas deflagration.

Table 3-5 of this addendum provides the four design basis accidents, causes and conditions of the accident scenarios, and mapping of the postulated events to the accident analysis in Section 3.4 of this addendum.

Table 3-1. Event Severity Index.

Safety class category designation	Description
S3	Potential significant radiological dose consequences or chemical exposure to the offsite receptor.
S2	Potential significant radiological dose consequences or chemical exposure to the onsite co-located worker.
S1	Potential industrial injury, radiological dose consequences or chemical exposure to the facility worker.
S0	No effect outside the facility confinement systems and no safety concerns for the facility worker, the onsite worker, or members of the general public.

Table 3-2. Event Frequency Index.

Frequency category designation	Numeric definition	Word definition
F3	$> 10^{-2}$/year	Anticipated
F2	$> 10^{-4}$ to $\leq 10^{-2}$/year	Unlikely
F1	$> 10^{-6}$ to $\leq 10^{-4}$/year	Extremely unlikely
F0	$\leq 10^{-6}$/year	Beyond extremely unlikely

3.4 ACCIDENT ANALYSIS

This section presents the formal development of potential accidents. Section 3.4.1 refers to the relevant sections of the TWRS BIO for the description of the consequence calculation methods common to the accidents analyzed. Section 3.4.2 presents analyses of the design basis accidents (DBA). No beyond design basis accidents (BDBA) were evaluated for the mixer pump test, for the reasons stated in Section 3.4.3.

3.4.1 Methodology

This section summarizes the radiological and toxicological consequence calculation assumptions used in the mixer pump test related accidents selected for further analysis in Section 3.3.2.4 of this addendum.

The calculation methods of the BIO as derived in Van Keuren 1996 and Van Keuren et al. 1996 have been applied to determine health effects. Where

assumptions vary from those of the TWRS BIO because of the mixer pump test, consequence calculations are summarized in Sections 3.4.2 and 3.4.3. Accident consequences are combined with the accident frequency and compared to the risk evaluation guidelines as shown in Tables 3-3 and 3-4 (excerpts of Tables 5.3-2 and 5.3-3 of the TWRS BIO).

Table 3-3. Radiological Risk Evaluation Guidelines.
(Excerpted from TWRS BIO Table 5.3-2)

Frequency category	Frequency range (yr^{-1})	mSv (rem)	
		Onsite	Offsite
Anticipated	$>10^{-2}$ to $\leq 10^{0}$	5 (0.5)	1 (0.1)
Unlikely	$>10^{-4}$ to $\leq 10^{-2}$	50 (5)	5 (0.5)
Extremely unlikely	$>10^{-6}$ to $\leq 10^{-4}$	100 (10)	40 (4)

Table 3-4. Toxicological Risk Evaluation Guidelines.
(Excerpted from TWRS BIO Table 5.3-3)

Frequency category	Frequency range (yr^{-1})	Primary concentration guidelines	
		Onsite	Offsite
Anticipated	$>10^{-2}$ to $\leq 10^{0}$	≤ ERPG-1	≤ PEL-TWA
Unlikely	$>10^{-4}$ to $\leq 10^{-2}$	≤ ERPG-2	≤ ERPG-1
Extremely unlikely	$>10^{-6}$ to $\leq 10^{-4}$	≤ ERPG-3	≤ ERPG-2

ERPG = Emergency Response Planning Guidelines
PEL = Permissible Exposure Limit
TWA = Time-Weighted Average

Table 3-5. Accident Selection and Mapping to Analysis. (2 sheets)

Accident	Cause or condition due to mixer pump operation	Map to accident analysis
1. Unfiltered release of radionuclides and toxic aerosols from the tank (Section 3.4.2.1)	HEPA filter failure due to:	
	• Aerosol generation from chemical reaction	Waste is not to be added by or during this process test. Therefore, this scenario is not relevant to this analysis.
	• Ignition of flammable gases in dome void space	See Flammable Gas discussion in Section 3.4.2.3.1. This scenario is presumed to cause an over-pressure peak that damages the ventilation equipment and is analyzed in Section 3.4.2.1.2.
	• Increased aerosol generation due to mixer pump action and heat input	Aerosol generation during the mixer pump process test is analyzed in Section 3.4.2.1.1.
	• Plugging of filters with particulates or moisture	Increased particulates and moisture generated due to mixer pump operation that would result in a HEPA filter plugging is analyzed in Section 3.4.2.1.1.
	• Tank bump	A tank bump resulting in HEPA filter blowout is analyzed in Section 3.4.2.2. The tank bump scenario is not considered representative of this class of accident and is therefore analyzed separately.
	• Tank dome collapse and breach of containment	Tank dome collapse is analyzed in Section 3.4.2.3.7.
	• Breach of vent ducting due to seismic event	The consequences of a breach of vent ducting leading to continuous unfiltered release are bounded by the HEPA filter failure (3.4.2.1.2 of this addendum), and are within guidelines for an unlikely event (seismic initiator). Therefore, this scenario is not analyzed further.
2. Tank bump (Section 3.4.2.2)	Uncontrolled waste overheating above saturation temperature:	The tank bump scenario is analyzed in Section 3.4.2.2.
	• Waste re-distribution causing poor heat transfer from the sludge to the liquid or potential ALC draft tube blockage	
	• Loss of ventilation	
	• Increased waste temperature due to mixer pump operation heat input	
	• Seismic event during pump operation	

Table 3-5. Accident Selection and Mapping to Analysis. (2 sheets)

Accident	Cause or condition due to mixer pump operation	Map to accident analysis
3. Breach of containment (Section 3.4.2.3)	Excess vacuum draw down	Tank buckling that would result in a breach of containment is not a credible scenario. The waste level in the tank prevents buckling. Waste will not be added or removed during the test. (No change from BIO analysis due to mixer pump operation.)
	Pressure from a flammable gas burn	See Flammable Gas discussion in Section 3.4.2.3.1.
	Equipment dropped into the tank during installation or removal	USQDs TF-96-0018, TF-96-0461, TF-96-0448, and TF-96-0805 address equipment installation. This analysis only deals with the mixer pump process test (Section 3.4.2.3.2) and does not address installation or removal of equipment.
	Missiles from pumps (pump impeller failure)	Internal missiles are analyzed in Section 3.4.2.3.3.
	Erosion during mixer pump operation	A breach of containment from erosion caused by mixer pump operation is analyzed in Section 3.4.2.3.4.
	Material degradation due to high temperature	The analysis of this scenario is addressed in Section 3.4.2.3.5.
	Tank dome collapse due to overloading	The analysis of this scenario is addressed in Section 3.4.2.3.6.
	Seismic event during pumping operations	A seismic event leading to failure of the mixer pump support assembly, riser extension, and/or spray wash system is analyzed in Section 3.4.2.3.7.
4. Over-pressurization caused by criticality (Section 3.4.2.4)	Mixer pump action during operation	Criticality is analyzed in Section 3.4.2.4.
	Waste settling after mixer pump shutdown	Criticality is analyzed in Section 3.4.2.4.

ALC = air lift circulator.
HEPA = high-efficiency particulate air (filter).
USQD = Unreviewed Safety Question Determination.

3.4.1.1 Radiological Consequence Calculation Methodology. The radiological consequence calculation methodology is provided in Section 5.3.1.1 of the TWRS BIO. This section provides the assumptions and data applicable to the consequence calculations for the mixer pump test. This specific information is provided in Tables 3-6 through 3-10.

The radionuclide concentration data in Table 3-8 above represents bounding activity concentrations for dose assessments and were used to derive the ULDs of Table 3-9. The data are bounding for all the AWF tanks and are, therefore, conservative for 241-AZ-101.

Tank 241-AZ-101 contains radioactive materials in the form of liquid and sludge. Table 3-9 below presents the inhalation and ingestion Unit Liter Doses (ULD)s for the liquid and solid constituents of AWF tank waste. The inhalation and ingestion ULDs were reported in Cowley 1996. They were calculated with dose conversion factors in EPA 1988 using the GENII computer program (Napier et al. 1988).

Table 3-6. Centerline Atmospheric Dispersion Coefficients.
(Excerpt from Van Keuren 1996)

Maximum individual	Bounding (99.5 percentile) integrated χ/Q' (s/m^3)	Bounding integrated χ/Q' (s/m^3) with PM*	Maximum puff χ/Q ($1/m^3$)
Onsite (sector and distance)	3.41 E-02 (E 100 m)	1.13 E-02 (ESE 100 m)	9.85 E-03 (E 100 m)
Offsite (sector and distance)	2.83 E-05 (N 8,760 m)	2.12 E-05 (N 8,760 m)	1.14 E-07 (NNW 8,690 m)

*NRC Regulatory Guide 1.145 (NRC 1982) plume meander correction applied.

Table 3-7. Chronic Annual Average Atmospheric Dispersion Coefficients for 200 Area Tank Farms.
(excerpt from Van Keuren 1996)

Maximum individual	Integrated χ/Q' (s/m^3)
Onsite (sector and distance)	4.03 E-04 (ESE 100 m)
Offsite (sector and distance)	1.24 E-07 (E 12,630 m)

Table 3-8. In-Tank Concentration of the 11 Radionuclides Chosen for Inclusion in Accident Analysis.
(excerpt from Table 5.3-4 of the TWRS BIO)

Nuclide	Activity concentration (Bq/L)	
	AWF liquids	AWF solids
^{60}Co	7.7 E+05	4.9 E+08
^{90}Sr	5.6 E+09	2.9 E+12
^{90}Y	5.6 E+09	2.9 E+12
^{137}Cs	8.8 E+10	9.8 E+10
^{154}Eu	a	1.1 E+10
^{237}Np	9.2 E+04	9.9 E+08
^{238}Pu	2.8 E+03	6.7 E+07
^{239}Pu[b]	1.2 E+06	4.4 E+08
^{241}Pu	3.4 E+05	1.7 E+09
^{241}Am	1.1 E+06	1.1 E+10
^{244}Cm	1.1 E+04	6.1 E+07

a) No valid sample result exists. Analysis indicates this isotope, in the liquids, is a negligible contributor to dose.
b) The ^{239}Pu activity concentration also includes ^{240}Pu.

AWF = Aging Waste Facility

Table 3-9. Unit Liter Doses for Inhalation and Ingestion.
(Excerpt from Table 5.3-5 of the TWRS BIO)

Composite	Inhalation ULD (Sv/L)	Ingestion ULD* (Sv-m3/s-L)
AWF liquids	1.4 E+03	0.092
AWF solids	1.7 E+06	8.1

*Includes 24 hour ingestion of fruits and vegetables, ground shine, inadvertent soil ingestion, and inhalation of material re-suspended from the ground.

Table 3-10. Release Durations for which the Maximum Puff χ/Q can be Applied.

Release	Duration
Onsite receptor, ground-level release	≤3.5s
Offsite receptor, ground-level release	≤250s

NOTE: The information in this table is from Van Keuren et al. 1996.

3.4.1.2 Toxicological Consequence Calculation Methodology. The toxicological consequence calculation methodology is provided in Section 5.3.1.2 of the TWRS BIO and defined as the toxicological sum-of-fractions (SOF) methodology. This methodology is based on the methodology provided in Van Keuren et al. 1996. This section provides the assumptions and data applicable to the consequence calculations for the mixer pump test. This specific information is provided in Tables 3-11 and 3-12.

Since the toxicological SOF methodology does not directly correlate to single, chemical-specific emergency response planning guideline (ERPG) values, the toxicological SOF values calculated for a specific accident do not provide

enough information for emergency response purposes. Depending upon the type, form, and location of waste released, the 24 analytes used in the toxicological SOF methodology may be reduced to a smaller set of peak contributors to be initially considered for emergency response purposes. For example, in double-shell tank liquids, there are five peak analytes (Na, NaOH, NH3, TOC, and U). For double shell tank solids, there are twelve peak analytes (Na, Cd, NaOH, Co, Oxalate, Cr, As, Tl, U, Be, TOC, and Se). Determination of emergency response actions relies upon the location of the release, the potential release quantity, consideration of the primary (peak) analytes, and the location of any potentially affected individuals (onsite or offsite).

Table 3-11. Tank Waste Liquids and Solids Analyte Concentrations

Analyte	Composite concentration (g/L)	
	DST solids[c]	DST liquids[c]
Ammonia (NH_3)	6.6 E+00	7.1 E+00
Antimony (Sb)	9.2 E-01	6.4 E-03
Arsenic (As)	5.7 E+00	1.1 E-02
Barium (Ba)	5.9 E+00	3.3 E-02
Beryllium (Be)	2.4 E-01	3.8 E-03
Cadmium (Cd)	2.6 E+01	7.0 E-02
Calcium (Ca)	2.6 E+01	1.3 E+00
Cerium (Ce)	2.6 E+00	5.8 E-02
Chromium (Cr^{+3})	1.5 E+02	a
Cobalt (Co)	4.4 E+00	8.8 E-03
Cyanide (CN)	4.7 E-01	9.1 E-02
Dysprosium (Dy)	a	a
Lanthanum (La)	3.0 E+01	1.0 E+00
Mercury (Hg)	1.2 E-01	2.4 E-04
Neodymium (Nd)	7.0 E+00	5.6 E-03
Oxalate (C_2O_4)	2.8 E+02	a
Selenium (Se)	1.9 E+00	2.8 E-01
Sodium hydroxide (NaOH)	2.3 E+02	2.1 E+02
Sodium (Na) - NaOH[b]	3.5 E+02	2.1 E+02
Tellurium (Te)	9.3 E-01	2.7 E-03
Thallium (Tl)	1.5 E+01	3.7 E-02
Total organic carbon (TOC)-oxalate[b]	7.5 E+01	4.0 E+01
Uranium (U)	4.4 E+01	1.1 E+01
Vanadium (V)	1.2 E-01	2.1 E-03

NOTE: The information in this table is from Table 5.3-6 from the TWRS BIO.
a) The best available data indicates there is not a significant concentration of this analyte in the composite.
b) To avoid counting the same analyte twice, the oxalate concentration was subtracted from the TOC concentration and NaOH was subtracted from the Na concentration.
c) The Aging Waste Facility tanks, including 241-AZ-101, are grouped with the other double-shell tanks for toxicological analysis.

DST = double-shell tank.

Table 3-12. Sum-of-Fractions for Risk Evaluation Guidelines for a Unit Release of Waste Chemicals. (excerpt from Table 5.3-8 of the TWRS BIO)

Tank waste type	Maximum individual	Sum-of-fractions (s/L) as a function of accident frequency (1/yr)		
		$1 - 10^{-2}$	$10^{-2} - 10^{-4}$	$10^{-4} - 10^{-6}$
DST solid or liquid continuous release				
DST liquids	Onsite	1.0 E+04	7.5 E+02	2.1 E+02
	Offsite	8.4 E+00	8.4 E+00	6.2 E-01
DST solids	Onsite	1.8 E+04	3.3 E+03	6.3 E+02
	Offsite	1.9 E+02	1.5 E+01	2.8 E+00
DST solid or liquid puff release				
DST liquids	Onsite	2.9 E+03	2.2 E+02	6.0 E+01
	Offsite	3.4 E-02	3.4 E-02	2.5 E-03
DST solids	Onsite	5.2 E+03	9.7 E+02	1.8 E+02
	Offsite	7.7 E-01	5.9 E-02	1.1 E-02

Note: The Aging Waste Facility tanks are grouped with the other double-shell tanks for the toxicological analysis.

3.4.2 Design Basis Accidents

3.4.2.1 Unfiltered Release of Radionuclides and Toxic Aerosols From the Tank.

3.4.2.1.1 HEPA Filter Plugging Due to Mixer Pump Aerosols Generation. The consequences resulting from HEPA filter plugging and subsequent damage caused by moisture overload are reduced by TWRS TSR AC 5.18. This requirement includes limiting the radioactive material inventories on HEPA filters and to ensure the capability of the HEPA filters to mitigate the consequences of specific accident scenarios. Surveillances are also performed by checking the pressure drop across the filters. Therefore, any trending toward HEPA filter plugging due to mixer pump and/or ALC operation will be detected, and corrective action taken. The following paragraphs discuss the process by which this conclusion was reached.

Wong and Waters 1994 attempted to evaluate the ability of a ventilation system to provide adequate de-entrainment of liquid and solid aerosols during mixer pump operations, and to determine if the radioactive aerosols will overload the HEPA filters.

Wong and Waters 1994 concluded that insufficient data exist to confidently estimate the magnitude of aerosol generation during tank waste mixer pump operations. However, it was noted by Wong and Waters 1994 that, qualitatively, aerosol generation would not be expected to be a severe problem during full-scale operations due to (1) the existing cooling system being able to handle the additional heat generated from mixer pump operations so that significant vapor rates are not expected to carry aerosols beyond the condensers (20,000,000 Btu/h cooling capacity), (2) aerosol testing conducted during mixer pump testing in Tank 241-AP-102 did not indicate a significant increase in aerosols (also, surface agitation as viewed by a camera indicated less disturbance than that produced by air lift circulators), and

(3) development tests indicate that Project W-030 will also adequately control the aerosol generation (BIO Addendum 3).

In addition, as stated in a letter report by Ligotke et al. 1994, analysis shows the operation of the two mixer pumps may increase the generation of aerosols slightly over normal storage operations without air lift circulators (ALCs) operating but that the aerosol generation would be less than that expected for normal storage operation with ALCs operating. Temperature variations are considered to be small contributors to aerosol generation, as compared to physical agitation, so that these analyses adequately bound worst-case expected temperature conditions in the tank.

The values used in this document to calculate the amount of aerosolized liquid in the vapor space bound operations with the mixer pumps alone, the ALCs alone, and the mixer pumps and ALCs together. The release fraction information is found in Section 3.4.2.1.2.3B of this addendum. Since the consequences do not approach the risk evaluation guidelines, confirmation testing is not required at this time.

Two off-normal situations are considered. The first is the failure of the ventilation system heater (in either the 241-A-702 or W-030 systems). This failure would result in condensation build-up in the ventilation ducting. The second failure scenario considered is the situation where mixer pump and/or ALC aerosol generation rates exceed the upstream equipment's (de-entrainers in the 241-A-702 system, or the high-efficiency mist eliminator [HEME] and high-efficiency gas absorber [HEGA] in the W-030 system) capabilities to prevent wetting of HEPA filters (by allowing increased liquid carryover). This could then create an excessive differential pressure across the HEPA filters and subsequent failure of the filters, resulting in a release of radioactive particulates. This release is mitigated through the implementation of BIO AC 5.18, addressing radioactive material maximum loading on HEPA filters (Section 3.4.2.1.2).

3.4.2.1.2 HEPA Filter Failure Due to Over-pressure.

3.4.2.1.2.1 HEPA Filter Failure Due to Over-pressure Accident Scenario. The HEPA Filter Failure due to over-pressure accident is an AWF Design Basis Accident documented in Section 5.3.2.2 of the TWRS BIO and supported by Ryan 1996, which was used in the BIO analysis. However, this accident scenario requires additional evaluation due to the assumption that mixer pump operation could result in the release of solids entrained in the liquid during a continuous unfiltered release. Thus, the potential release of solid (as well as liquid) waste requires a re-assessment of the consequences calculated in the TWRS BIO.

This section evaluates the consequences of an unprevented HEPA filter failure due to over-pressure accident scenario using the same initial assumptions as were used in the TWRS BIO analysis (i.e., using the maximum radionuclide loading on HEPA filters equating to a dose rate of 200 mrem/h). Therefore, all consequences given in this BIO Addendum for this scenario are considered to contain some degree of mitigation. Filter failure due to over-pressure is postulated to require a mechanism such as hydrogen deflagration, which is an anticipated event without controls (Section 5.3.2.14 of the TWRS

BIO). The estimated frequency for this accident scenario (deflagration in Tank 241-AZ-101 during the mixer pump test with a complete filter failure due to over-pressure), was determined to be extremely unlikely. This frequency determination is based on the configuration of the ventilation systems and the duration of the mixer pump test as well as the assertion that the potential for a waste disturbance to generate a gas release event of sufficient magnitude to be beyond the capabilities of the tank ventilation system is very small (based on available characterization data for Tank 241-AZ-101, refer to Section 3.4.3.2.1, "Gas Release Event," of this addendum). For the Project W-030 ventilation system (see BIO Addendum 3 for additional details), there are four filtration elements in series (a HEME, two HEPA filters, and a HEGA), remotely located from each of the AWF tanks that would have to fail to varying degrees for this accident scenario. The varying degrees of failure for these pieces of equipment relate to the physical mechanisms involved for each component during a pressure pulse. For the HEME and the HEGA, which are not designed specifically for particulate filtration, the pressure pulse results in a temporary decrease in decontamination efficiency and carryover of additional liquids through the equipment. For the analysis regarding the HEPA filters, however, the pressure pulse results in a permanent rupture of the filtration media. For the 702-A ventilation system, the pressure pulse from a deflagration accident would be dampened by approximately one-quarter mile of 20-inch diameter ventilation ducting and two de-entrainers (similar "failure" mechanism as discussed above for a HEGA and/or a HEME) (Section 2.4.3.7.1 of Appendix B of the TWRS BIO for additional details). The accident frequency is further reduced when considering that the mixer pump test has an anticipated duration of 1,300 hours, or 0.15 year. Based on the above considerations, the likelihood of a deflagration event occurring during the approximate 1,300 hour time period of the mixer pump test with a sufficiently powerful pressure pulse to fail the HEPA filters is considered to be extremely unlikely (frequency of 10^{-4} to 10^{-6} per year). These findings are also applicable to the currently anticipated W-030 ventilation system (four elements in series that would have to fail to varying degrees).

In this scenario, the failure due to over-pressure of a single bank of ventilation system filters is assumed to be followed by the active ventilation of the tank headspace. This would be a puff release (i.e., the loss of the HEPA filters) followed by a continuous release of unfiltered airflow as the system continues to operate for 24 hours. A 24 hour release is equivalent to two shift changes. It is assumed that the filter failure due to over-pressure goes without intervention (is undetected) during this time.

The accident involving failure due to over-pressure of the inlet HEPA filters (only existing on the W-030 ventilation system) was considered during the HazOp study. It is true that this accident has a higher frequency than the accident involving the downstream filters, but the consequences are significantly lower. The consequences of the HEPA filter failure due to over-pressure evaluated in this BIO Addendum derive from two separate source terms: (1) radioactivity previously entrained on the HEPA filters and released during the accident, and (2) radioactivity released from continued 24 hours operation of the ventilation system with no filtration. The consequences are dominated by the 24-hour release scenario. It is unlikely that the inlet HEPA filter would be as heavily loaded as the downstream HEPA filters, but even if it were, the consequences of an inlet filter failure due to over-pressure would

be about three orders of magnitude less than a complete failure of the downstream filtration system. The ventilation system would continue to operate, provide negative pressure on the tank, and exhaust tank headspace vapors through the downstream HEPA filters.

The first step of the analysis is to evaluate the HEPA filter loading of particulates. To determine the consequences of releasing the accumulated particulates in a puff release, it is assumed that only liquid waste constituents accumulate on the filters during normal service (i.e., waste which re-condenses downstream of the de-entrainers or the HEME/HEGA (241-A-702 or W-030 ventilation systems, respectively). The next step is to evaluate the continuous flow contribution, conservatively assuming mixed waste aerosols (term "mixed waste" used in this document to denote a composite of liquids and solids as opposed to the regulatory usage of radioactive and hazardous wastes) are released due to mixer pump re-suspension. The final step is to determine the radiological and toxicological consequences of this accident scenario.

3.4.2.1.2.2 HEPA Filter Failure Due to Over-pressure Accident Source Term.

A. Source Term from the Filter

The consequences of a HEPA filter failure due to over-pressure are dependent upon the initial filter loading and the loading in the ventilation ductwork and other components. For the ventilation system upgrade provided by Project W-030, the amount of material released would be that from a single bank of filters (two HEPA filters in series in one of two independent, parallel ventilation trains, with only one filter bank will be used at a time), and three additional volume equivalents to account for the loading in the HEME, HEGA, and the ventilation duct work. Therefore, the number of HEPA filter volumes released for Project W-030 would be 4. For the 241-A-702 ventilation system, Van Vleet 1996a assumes the number of HEPA filter volumes is 30, considering 6 banks of 5 HEPA filter volume equivalents (2 HEPAs, 2 de-entrainers, and one volume equivalent for ductwork), which is more limiting. This is conservative since 5 of the banks contain only 2 HEPAs and no de-entrainers.

From the same calculation note, the maximum total amount of material potentially released is found to be 5.62 E-3 L. This result is based on considering ^{137}Cs as the predominant gamma emitter for the AWF source material for the liquids (the other gamma emitters have much smaller concentrations). However, because of the agitation of the tank solids into the supernatant, this analysis must take into account gamma contributors from the solids within the tank as well as the contributors from the liquids. Therefore, the ULD (radiological) and SOF (toxicological) values used in this analysis will be a weighted average of the values given in the BIO for AWF liquids and solids (4% solids and 96% liquid as derived from the TWRS BIO, Appendix B, Table - 2-3), adjusted to account for only one of the four Aging Waste Tanks being affected by the agitation (i.e., solids aerosols emanating from only one of the four tanks). In addition, a maximum loading on the filter is assumed to be no greater than the activity that would result in 200 mrem/h on contact for each filter or component, based on maximum allowable loading before filter change-out (TWRS TSR AC 5.18). The amount of material on the filter will be

taken from the Van Vleet 1996a calculation note, as this bounds the amount of material which could be on the filter (i.e., addition of solids in the aerosol would result in a lesser volume of deposited material achieving the 200 mrem/h contact reading).

B. Source Term Released from Unfiltered Operation of the Ventilation System

For the ventilation system upgrade provided by Project W-030, the design airflow through the ventilation system is 4.7×10^{-1} m^3/s (1,000 cubic feet per minute [CFM]). Also for Project W-030, the rate used for the unfiltered continuous release of the ventilation system assumes the simultaneous operation of both fans or 9.4×10^{-1} m^3/s (2,000 CFM) to bound the scenario. For the 241-A-702 ventilation system, the design airflow through the system is 1.89 m^3/s (4,000 CFM), which is more limiting.

With the mixer pumps running in Tank 241-AZ-101 during unfiltered operation of the ventilation system, it is assumed that the supernatant and sludge is homogeneously mixed. This requires modification of the ULDs listed in Table 3-9 of this addendum to reflect the presence of sludge particles in aerosols released to the tank headspace. The ULDs for the liquid/sludge mixture are calculated using the liquid and solid ULDs given in Table 3-9 of this addendum and the volume fractions of liquid and sludge in Tank 241-AZ-101,

$$ULD_{mix} = (f_1 \times ULD_{liq}) + (f_2 \times ULD_{sol})$$

where:

f_1 = 0.96, volume fraction of liquid in Tank 241-AZ-101 (data from TWRS BIO, Appendix B, Table 2-3)

f_2 = 0.04, volume fraction of solids in Tank 241-AZ-101 (data from TWRS BIO, Appendix B, Table 2-3)

ULD_{liq} = unit liter dose for AWF liquids (Table 3-9 of this addendum)

ULD_{sol} = unit liter dose for AWF solids (Table 3-9 of this addendum)

Using the above formula, the Inhalation and Ingestion ULDs for Tank 241-AZ-101 mixed liquids and solids are calculated to be:

Inhalation ULD_{mix} (Sv/L) = 6.9×10^4

Ingestion ULD_{mix} (Sv-m^3/s-L) = 0.4

The source term released from unfiltered operation of the ventilation system is drawn from all four AWF tanks, but the mixer pumps operate only in one tank. Therefore, the ULDs for the unfiltered release must be adjusted to represent the aerosols from one mixed tank and three unmixed tanks,

$$ULD'_{mix} = (0.25 \times ULD_{mix}) + (0.75 \times ULD_{liq})$$

The Inhalation and Ingestion ULDs for the aerosols released from unfiltered operation of the ventilation system are calculated to be:

Inhalation ULD'_{mix} (Sv/L) = 1.8×10^4

Ingestion ULD'_{mix} (Sv-m^3/s-L) = 0.17

3.4.2.1.2.3 HEPA Filter Failure Due to Over-pressure Accident Offsite Radiological Consequence Analysis.

A. Offsite Radiological Consequence for a Puff Release from Filter Failure Due to Over-Pressure

The TEDE for inhalation for offsite consequences for the loss of a HEPA filter can be found using the following equation:

$$D_{inh\text{-}filter}(Sv) = Q(L) \times \frac{\chi}{Q'}\left[\frac{s}{m^3}\right] \times R\left[\frac{m^3}{s}\right] \times ULD_{inh}\left[\frac{Sv}{L}\right]$$

where:

$D_{inh\text{-}filter}$ = dose due to inhalation

Q = respirable source term

χ/Q' = atmospheric dispersion coefficient

R = breathing rate

ULD_{inh} = inhalation unit liter dose

The type of material accumulating on the AWF filters is from the AWF liquids and solids being deposited on the filter from normal ventilation air flow. The total effective dose equivalent (TEDE) for offsite consequence is found to be:

$D_{inh\text{-}filter}$ = $(5.62 \times 10^{-3}$ L) x $(2.83 \times 10^{-5}$ s/m^3) x $(3.3 \times 10^{-4}$ m^3/s) x $(1.8 \times 10^4$ Sv/L)

$D_{inh\text{-}filter}$ = 9.5×10^{-7} Sv (9.5×10^{-5} rem)

where:

Q = $V_{released}$ (Section 3.4.2.1.2.2 of this addendum) = 5.62×10^{-3} L

χ/Q' (Table 3-6 of this addendum, bounding offsite) = 2.83×10^{-5} s/m^3

R = acute breathing rate (Van Keuren 1996) = 3.3×10^{-4} m^3/s

$ULD'_{liquid\text{-}inh}$ (Section 3.4.2.1.2.2 of this addendum) = 1.8×10^{4} Sv/L

These inputs are consistent with those used in Ryan 1996 as input for the TWRS BIO consequence analysis.

The TEDE for ingestion for offsite consequences for the loss of a HEPA filter can be found using the following equation:

$$D_{ing}(Sv) = Q(L) \times \frac{\chi}{Q'} \left[\frac{s}{m^3}\right] \times ULD_{ing} \left[\frac{Sv\,m^3}{s\text{-}L}\right]$$

where:

D_{ing} = dose due to ingestion

Q = respirable source term

χ/Q' = atmospheric dispersion coefficient

ULD_{ing} = ingestion unit liter dose

The TEDE for offsite consequence is found to be:

$D_{ing\ filter}$ = $(5.62 \times 10^{-3}$ L) x $(2.83 \times 10^{-5}$ s/m^3) x (0.17 Sv-m^3/s-L)

$D_{ing\ filter}$ = 2.7×10^{-8} Sv (2.7×10^{-6} rem)

where:

$ULD'_{liquid\text{-}ing}$ (Section 3.4.2.1.2.2 of this addendum) = 0.17 Sv-m^3/s-L

B. Offsite Radiological Consequence for 24 Hour Continuous Venting After Filter Failure due to Over-pressure

The duration of 24 hours was selected to represent the continued venting of the system since this represents two shift changes. Radioactive material is carried from the tank waste material into the tank vapor space atmosphere through several physical processes. Only a fraction of the liquid waste constituents, the partition fraction (PF), in a tank will migrate into the vapor space atmosphere. The PF for AWF tanks is found to be 1×10^{-8} under the worst case liquid waste agitation conditions (Ryan 1996, Appendix A), as used in the TWRS BIO consequence analysis. The value bounds severe waste surface agitation, such as ALC operation and tank boiling.

The amount of mixed waste released by operating the ventilation system can be found by:

$V_{release\ rate} = V_{rate} \times PF$

$V_{release\ rate} = (1.89 \times 10^{3}\ L/s) \times (1 \times 10^{-8})$

$V_{release\ rate} = 1.89 \times 10^{-5}\ L/s$

where:

$V_{rate} = 1.89 \times 10^{3}\ L/s$ (4,000 CFM)

PF (Ryan 1996) = 1×10^{-8}

The dispersion coefficients (χ/Q') to be used for the 12-hour and 24-hour releases are calculated from the methodology presented in Van Keuren 1996.

χ/Q', Offsite (24-hour)

To determine the χ/Q' for the 24-hour release, the logarithmic interpolation procedure described in Van Keuren 1996 is used to correctly identify the proper χ/Q' to be used. The χ/Q' used for the 2-hour release is 2.12×10^{-5} s/m^3 to account for plume meander (Table 3-6 of this addendum). Using the equation from Van Keuren 1996 yields:

$$\frac{\log(2.12 \times 10^{-5}) - \log(\chi/Q'\ 24\text{-hour})}{\log(2.12 \times 10^{-5}) - \log(1.24 \times 10^{-7})} = \frac{\log(2\text{-hour}) - \log(24\text{-hour})}{\log(2\text{-hour}) - \log(8{,}760\text{-hour})}$$

The offsite χ/Q' (24-hour) is 4.62×10^{-6} s/m^3.

The TEDE for inhalation for offsite consequences for the continued operation for 24 hours after the loss of a HEPA filter can be found using the same equation as was used for inhalation consequences in Section 3.4.2.1.2.3.A of this addendum.

TEDE for offsite consequence for 24 hour exposure is found to be:

$D_{inh\ vent} = (1.89 \times 10^{-5}\ L/s) \times (4.62 \times 10^{-6}\ s/m^3) \times (2.7 \times 10^{-4}\ m^3/s) \times (1.8 \times 10^{4}\ Sv/L) \times (24\ h) \times (60\ min/h) \times (60\ s/min)$

$D_{inh\ vent} = 3.7 \times 10^{-5}$ Sv (3.7×10^{-3} rem)

where:

$Q = V_{release\ rate} = 1.89 \times 10^{-5}$ L/s

χ/Q' (offsite 24-hour) = 4.62×10^{-6} s/m^3

R = chronic breathing rate (Van Keuren 1996) = 2.7×10^{-4} m^3/s

$ULD'_{mix\text{-}inh}$ (Section 3.4.2.1.2 of this addendum) = 1.8×10^{4} Sv/L.

The TEDE for ingestion for offsite consequences for the continued operation for 24 hours after the loss of a HEPA filter can be found using the same equation as was used for ingestion consequences in Section 3.4.2.1.2.3.A of this addendum.

The TEDE for offsite consequence is found to be:

$$D_{ing\ vent} = (1.89 \times 10^{-5}\ L/s) \times (4.62 \times 10^{-6}\ s/m^3) \times (0.17\ Sv\text{-}m^3/s\text{-}L) \times (24\ h) \times (3{,}600\ s/h)$$

$$D_{ing\ vent} = 1.3 \times 10^{-6}\ Sv\ (1.3 \times 10^{-4}\ rem)$$

where:

$ULD'_{mix\text{-}ing}$ (Section 3.4.2.1.2 of this addendum) = 0.17 Sv-m^3/s-L

C. Total Offsite Radiological Consequence

Total offsite consequences ($D_{offsite}$) for HEPA filter failure due to over-pressure is the sum of the filter offsite consequences and the unfiltered operation of the ventilation system offsite consequences. The total offsite consequence is found to be:

$$D_{offsite} = D_{inh\text{-}filter} + D_{ing\ filter} + D_{inh\ vent} + D_{ing\ vent}$$

$$D_{offsite} = 9.5 \times 10^{-7}\ Sv + 2.7 \times 10^{-8}\ Sv + 3.7 \times 10^{-5}\ Sv + 1.3 \times 10^{-6}\ Sv$$

$$D_{offsite} = 3.9 \times 10^{-5}\ Sv\ (3.9 \times 10^{-3}\ rem)$$

3.4.2.1.2.4 HEPA Filter Failure Due to Over-pressure Onsite Radiological Consequence.

A. Onsite Radiological Consequence For a Puff Release from Filter Failure Due to Over-Pressure

The TEDE for onsite consequences for the HEPA filter is found using the same methodology and equation (Section 3.4.2.1.2.3.A of this addendum) as for the offsite. The TEDE for onsite consequence is found to be:

$$D_{inh\text{-}filter} = (5.62 \times 10^{-3}\ L) \times (3.41 \times 10^{-2}\ s/m^3) \times (3.3 \times 10^{-4}\ m^3/s) \times (1.8 \times 10^{4}\ Sv/L)$$

$$D_{inh\text{-}filter} = 1.1 \times 10^{-3}\ Sv\ (1.1 \times 10^{-1}\ rem)$$

where:

Q = $V_{released}$=5.62 x 10^{-3} L

χ/Q' (Table 3-6 of this addendum, bounding onsite) = 3.41 x 10^{-2} s/m^3

R = acute breathing rate (Van Keuren 1996) = 3.3 x 10^{-4} m^3/s

$ULD'_{liquid\text{-}inh}$ (Section 3.4.2.1.2.2 of this addendum) = 1.8 x 10^{4} Sv/L

B. Onsite Radiological Consequence for 24 Hour Continuous Release After Filter Failure Due to Over-pressure

Since shifts are limited to 12 hours, this is assumed to be the maximum exposure to the onsite receptor.

χ/Q', Onsite (12-hour)

To determine the χ/Q' for the 12-hour release, the logarithmic interpolation procedure described in Van Keuren 1996 is used to correctly identify the proper χ/Q' to be used. The χ/Q' used for the 2-hour release is 1.13×10^{-2} s/m^3 to account for plume meander (Table 3-6 of this addendum). Using the equation from Van Keuren 1996 yields:

$$\frac{\log(1.13 \times 10^{-2}) - \log(\chi/Q' \text{ 12-hour})}{\log(1.13 \times 10^{-2}) - \log(4.03 \times 10^{-4})} = \frac{\log(\text{2-hour}) - \log(\text{12-hour})}{\log(\text{2-hour}) - \log(\text{8,760-hour})}$$

The onsite χ/Q' (12-hour) is 5.54×10^{-3} s/m^3.

Using the same equations as in Section 3.4.2.1.2.3 of this addendum, the TEDE for onsite consequences from the continuous release is found to be:

$$D_{inh\ vent} = (1.89 \times 10^{-5}\ L/s) \times (5.54 \times 10^{-3}\ s/m^3) \times (3.3 \times 10^{-4}\ m^3/s) \times (1.8 \times 10^{4}\ Sv/L) \times (12\ h) \times (3{,}600\ s/h)$$

$$D_{inh\ vent} = 2.7 \times 10^{-2}\ Sv\ (2.7\ rem)$$

where:

$Q = V_{release\ rate} = 1.89 \times 10^{-5}$ L/s

χ/Q' (onsite 12-hour) $= 5.54 \times 10^{-3}$ s/m^3

R = acute breathing rate (Van Keuren 1996) $= 3.3 \times 10^{-4}$ m^3/s

$ULD'_{mix\text{-}inh}$ (Section 3.4.2.1.2 of this addendum) $= 1.8 \times 10^{4}$ Sv/L

C. Total Onsite Radiological Consequence

Total onsite consequences (D_{onsite}) for HEPA filter failure due to over-pressure is the sum of the puff and the continuous releases. This is found to be:

$$D_{onsite} = D_{inh\text{-}filter} + D_{inh\ vent}$$

$$D_{onsite} = 1.1 \times 10^{-3}\ Sv + 2.7 \times 10^{-2}\ Sv$$

$$D_{onsite} = 2.8 \times 10^{-2}\ Sv\ (2.8\ rem)$$

3.4.2.1.2.5 HEPA Filter Failure Due to Over-pressure Toxicological Consequences. The toxicological consequences for the HEPA filter failure due to over-pressure can be found using the method outlined in Section 5.3.1.2 of the TWRS BIO and the assumptions listed in Section 3.4.1.2 of this addendum. The unmitigated, unprevented HEPA filter failure due to over-pressure accident frequency was determined to be extremely unlikely. The amount of material released from the filter was determined to be 5.62×10^{-3} L and is a puff type release. The release rate for operation of the ventilation system without filters is 1.89 m^3/s (4,000 CFM) and is a continuous type release.

A. HEPA Filter Failure Due to Over-pressure Toxicological Consequences Due to a Puff Release

As with the radiological source term, the type of material accumulating on Tank 241-AZ-101 filters is from liquids and solids being deposited on the filters from normal air flow (Sections 3.4.2.1.2.3 and 3.4.2.1.1 of this addendum). To obtain the SOF for the release of the liquids and solids on the filter media, the SOF for the AWF liquids and solids for the puff release for the extremely unlikely event (Table 3-12 of this addendum) must be adjusted (as in Section 3.4.2.1.2.2 of this addendum) to account for the percentage of solids in the aerosol stream as well as the fact that only one of the four tanks in the Aging Waste Facility will be emitting the increased solids levels as a result of the mixer pump test. This adjusted SOF can be obtained from:

$$SOF_{mix\ puff\ off} = (f_1 \times SOF_{liq\ puff\ off}) + (f_2 \times SOF_{sol\ puff\ off})$$

Using the above equation, the SOF for the liquid/solid mix is calculated to be:

$$SOF_{mix\ puff\ off} = 2.8 \times 10^{-3}\ L^{-1}$$

As in Section 3.4.2.1.2.2 of this addendum, this SOF must be adjusted to account for the fact that ventilation is drawn from all four AWF tanks, but the mixer pumps operate in only one tank. Therefore, the SOF must be adjusted to represent the aerosols from the one mixed tank and three unmixed tanks,

$$SOF'_{mix\ puff\ off} = (0.25 \times SOF_{mix\ puff\ off}) + (0.75 \times SOF_{liq\ puff\ off})$$

Using the above equation, the SOF for the liquids and solids resulting from the mixer pump test is calculated to be:

$$SOF'_{mix\ puff\ off} = 2.6 \times 10^{-3}\ L^{-1}$$

The consequences for the offsite receptor from a filter failure due to over-pressure unmitigated puff release is:

$T_{puff\ off} = V_{released} \times SOF'_{mix\ puff\ off}$

$T_{puff\ off} = (5.62 \times 10^{-3}\ L) \times (2.6 \times 10^{-3}\ L^{-1})$

$T_{puff\ off} = 1.5 \times 10^{-5}$

where:

$V_{release} = 5.62 \times 10^{-3}$ L (Section 3.4.2.1.2 of this addendum)

For the onsite receptor, the SOF for an extremely unlikely event are also calculated in the same fashion as for the offsite receptor.

The consequence for the onsite receptor from a filter failure due to over-pressure unmitigated puff release is:

$T_{puff\ on} = V_{released} \times SOF'_{mix\ puff\ on}$

$T_{puff\ on} = (5.62 \times 10^{-3}\ L) \times (6.1 \times 10^{1}\ L^{-1})$

$T_{puff\ on} = 3.4 \times 10^{-1}$

B. HEPA Filter Failure Due to Over-pressure Toxicological Consequences Due to a Continuous Release Following the Filter Failure

For the continuous release, the SOF for an extremely unlikely event are calculated considering a liquid/sludge mixture source term.

$SOF_{mix\ cont\ off} = (f_1 \times SOF_{liq\ cont\ off}) + (f_2 \times SOF_{sol\ cont\ off})$

where:

f_1 = 0.96, volume fraction of liquid in Tank 241-AZ-101 (data from TWRS BIO, Appendix B, Table 2-3)

f_2 = 0.04, volume fraction of solids in Tank 241-AZ-101 (data from TWRS BIO, Appendix B, Table 2-3)

$SOF_{liq\ cont\ off}$ = for DST liquids (Table 3-12 of this addendum) = 6.2×10^{-1} s/L

$SOF_{sol\ cont\ off}$ = for DST solids (Table 3-12 of this addendum) = 2.8×10^{0} s/L

Using the above formula, the SOF for Tank 241-AZ-101 mixed liquids and solids is calculated to be:

$SOF_{mix\ cont\ off} = 7.1 \times 10^{-1}$ s/L

The toxic chemical release from unfiltered operation of the ventilation system is drawn from all four AWF tanks, but the mixer pumps operate only in one tank. Therefore, the SOF for the unfiltered release must be adjusted to represent the aerosols from one mixed tank and three unmixed tanks.

$$SOF'_{mix\ cont\ off} = (0.25 \times SOF_{mix\ cont\ off}) + (0.75 \times SOF_{liq\ cont\ off})$$

$$SOF_{mix\ cont\ off} = 7.1 \times 10^{-1} s/L$$

$$SOF_{liq\ cont\ off} = \text{for DST liquids (Table 3-12 of this addendum)}$$
$$= 6.2 \times 10^{-1} s/L$$

The SOF for the aerosols released from unfiltered operation of the ventilation system is calculated to be:

$$SOF'_{mix\ cont\ off} = 6.4 \times 10^{-1} s/L$$

The consequence for the offsite receptor from the loss of an AWF filter is:

$$T_{cont\ off} = V_{released} \times SOF'_{mix\ cont\ off}$$

$$T_{cont\ off} = (1.89 \times 10^{-5}\ L/s) \times (6.4 \times 10^{-1} s/L)$$

$$T_{cont\ off} = 1.2 \times 10^{-5}$$

For the onsite receptor, the SOF for an extremely unlikely event is also calculated in the same fashion as for the offsite receptor for the liquid/sludge mixture.

$$SOF_{mix\ cont\ on} = (f_1 \times SOF_{liq\ cont\ on}) + (f_2 \times SOF_{sol\ cont\ on})$$

where:

f_1 = 0.96, volume fraction of liquid in Tank 241-AZ-101 (data from TWRS BIO, Appendix B, Table 2-3)

f_2 = 0.04, volume fraction of solids in Tank 241-AZ-101 (data from TWRS BIO, Appendix B, Table 2-3)

$SOF_{liq\ cont\ on}$ = for DST liquids (Table 3-12 of this addendum)
$= 2.1 \times 10^{2} s/L$

$SOF_{sol\ cont\ on}$ = for DST solids (Table 3-12 of this addendum)
$= 6.3 \times 10^{2} s/L$

Using the above formula, the SOF for Tank 241-AZ-101 mixed liquids and solids is calculated to be:

$$SOF_{mix\ cont\ on} = 2.3 \times 10^{2} s/L$$

The toxic chemical release from unfiltered operation of the ventilation system is drawn from all four AWF tanks, but the mixer pumps operate only in one tank. Therefore, the SOF for the unfiltered release must be adjusted to represent the aerosols from one mixed tank and three unmixed tanks.

$SOF'_{mix\ cont\ on} = (0.25 \times SOF_{mix\ cont\ on}) + (0.75 \times SOF_{liq\ cont\ on})$

$SOF_{mix\ cont\ on} = 2.3 \times 10^{2} s/L$

$SOF_{liq\ cont\ on}$ = for DST liquids (Table 3-12 of this addendum)
$= 2.1 \times 10^{2} s/L$

The SOF for the aerosols released from unfiltered operation of the ventilation system is calculated to be:

$SOF'_{mix\ cont\ on} = 2.2 \times 10^{2} s/L$

The consequence for the onsite receptor from the loss of an AWF filter is:

$T_{cont\ on} = V_{released} \times SOF'_{mix\ cont\ on}$

$T_{cont\ on} = (1.89 \times 10^{-5} L/s) \times (2.2 \times 10^{2} s/L)$

$T_{cont\ on} = 4.2 \times 10^{-3}$

C. Sum of the Offsite Toxicological Consequence

The sum of the offsite puff release toxicological consequence and the offsite continuous release toxicological consequence gives the total offsite toxicological consequence:

$T_{total\ off} = T_{puff\ off} + T_{cont\ off}$

$T_{total\ off} = 1.5 \times 10^{-5} + 1.2 \times 10^{-5}$

$T_{total\ off} = 2.7 \times 10^{-5}$

D. Sum of the Onsite Toxicological Consequence

The sum of the onsite puff release toxicological consequence and the onsite continuous release toxicological consequence gives the total onsite toxicological consequence:

$T_{total\ on} = T_{puff\ on} + T_{cont\ on}$

$T_{total\ on} = 3.4 \times 10^{-1} + 4.2 \times 10^{-3}$

$T_{total\ on} = 3.4 \times 10^{-1}$

3.4.2.1.2.6 HEPA Filter Failure Due to Over-pressure Accident Comparison to Guidelines. Table 3-13 shows that both radiological and toxicological consequences of a HEPA filter failure due to over-pressure fall within the risk guidelines for the extremely unlikely frequency category.

Table 3-13. Radiological and Toxicological Consequences of a HEPA Filter Failure Due to Over-Pressure Accident, with Comparison to Risk Guidelines.

Receptor	Radiological		Toxicological	
	Consequence	Guideline	Consequence (SOF)	Guideline (SOF)
Onsite	2.8×10^{-2} Sv (2.8 rem)	0.1 Sv (10 rem)	3.4×10^{-1}	1 (ERPG-3)
Offsite	3.9×10^{-5} Sv (3.9×10^{-3} rem)	0.04 Sv (4 rem)	2.7×10^{-5}	1 (ERPG-2)

3.4.2.1.2.7 HEPA Filter Failure Due to Over-pressure Accident Summary of Safety Class/Safety Significant Structures, Systems, and Components (SSC)s and Technical Safety Requirement (TSR) Controls. There are no new Safety SSCs required by this project to either the existing AWF ventilation system (241-A-702) or the upgraded ventilation system to be provided by Project W-030, associated with preventing or mitigating the consequences of the HEPA filter failure due to over-pressure accident.

The TWRS TSR control (AC 5.18) is still required to ensure the consequences of a HEPA filter failure due to over-pressure accident remain within the risk evaluation guidelines:

- TWRS TSR AC 5.18 requires the HEPA filters to be maintained such that the dose rate from them is < 200 mrem/h. This ensures that HEPA filter loadings do not exceed the values assumed in this report.

3.4.2.2 Tank Bump Accident.

3.4.2.2.1 Aging Waste Facility Tank Bump Accident Scenario. The thermal phenomenon known as a tank bump occurs when steam stored in the waste causes a waste rollover and a rapid steam pressurization of the tank headspace. The Aging Waste Facility Tank Bump Accident Scenario analysis strategy is addressed in Section 5.3.2.22 of the TWRS BIO. A tank bump is a safety concern because of the potential for a release of aerosolized waste to the environment. The following tank bump scenario description, used as a basis for the Tank 241-AZ-101 mixer pump test analysis, is summarized from Section 5.3.2.22 of the TWRS BIO.

The initial conditions for a tank bump accident to occur are those leading to local saturation temperature and steam buildup within the waste. Those require:

(1) a heat generation rate greater than 7,600 W (26,000 Btu/h), assuming no active ventilation, to reach waste saturation temperature 104 °C (220 °F) at atmospheric pressure,

Note: For Tank 241-AZ-101, the saturation temperature would be 126 °C (258 °F) at the bottom of the tank (accounting for hydrostatic pressure) and 104 °C (220 °F) at the surface (Sathyanarayana 1994),

(2) an amount of non-convective and highly viscous sludge holding steam bubbles, and

(3) an in-tank waste heat removal system failure.

In addition to this, the higher the waste level is, the higher the saturation temperature and the energy stored before a bump.

3.4.2.2.2 Tank Bump Scenario Analysis and Controls for Tank 241-AZ-101 Mixer Pump Test. Tank 241-AZ-101 currently contains waste with a heat generation rate of approximately 70,806 W (241,600 Btu/h) (Hodgson 1995). The operation of the two 300 hp mixer pumps will raise the tank heat generation rate significantly (i.e., by 402,000 W [1,374,000 Btu/h] for a total heat generation rate of 472,806 W [1,613,000 Btu/h] from Nordquist 1997). This is well above the minimum heat load value (7.6 kW [26,000 Btu/h]) that may lead, in certain conditions, to waste saturation temperatures; therefore, 241-AZ-101 is judged to have the conditions necessary for a tank bump.

For the unmitigated and unprevented accident scenario, it was postulated that the cooling capability of the primary tank active ventilation system for Tank 241-AZ-101 would be lost for an indefinite amount of time. The annulus ventilation system is under repair as of this writing, and is therefore, not available to provide additional cooling for the tank waste. The conservative assumption has been made that this system would not be available during the mixer pump test. This results in a bounding analysis in that, should the annulus system be made available, all safety margins would be increased over analyzed values. Therefore, considering the assumption of the loss of the primary ventilation system, the frequency of a Tank 241-AZ-101 tank bump during the mixer pump test was categorized as an unlikely event (due to the short duration of the test). This is based on the fact that a similar ventilation system on 101-SY was determined to have a probability of failure of 4.8×10^{-3} (LANL 1996, Appendix J, Section 2.1.1).

A. Normal Operation of the Pumps and the Primary Ventilation System

In addition to the heat introduced by the operation of the mixer pumps in Tank 241-AZ-101, an increase in waste temperature may occur due to changes in heat transfer characteristics within the waste. These changes may result from re-suspension of solid particulates within the liquid waste as well as non-mobilized sludge areas (even with two pumps operating, it has yet to be determined how long it might take before the sludge becomes completely mixed). When the pumps are turned off at the end of the test or during test interruptions, the bottom of the tank could potentially experience a temperature excursion due to reduced thermal conductivity as the waste solids resettle. This effect is expected even with the primary ventilation system operating normally.

The tank bump protection strategy is one of prevention and relies on air lift circulator (ALC) operation to prevent the potential for heat and steam bubble buildup within the sludge. Several tanks during the history of aging waste tanks (Bendixsen 1990) have had tank bumps. These tank bump accidents only occurred in "boiling" tanks (from 1 to 7 Million Btu/h, and sludge temperatures well above 115.6 °C [240 °F]) prior to ALC full implementation (the cases involved situations in which either no ALCs were operating, only 4 ALCs were operating, or a case in which the ALCs had been stopped and were in the process of being re-started at the time of the bump). In most of the cases, these tanks were not provided with any active cooling ventilation system at the time of the bump. During over 40 years of Hanford Site operation, the ALCs have been the most successful method used to prevent "boiling" tanks from bumping. Several studies have been performed to assess ALC use for tank bump prevention. Among these are Fineman and Lawler 1982, which measured ALC convective flow rates, and Fineman 1984, which contains a Pacific Northwest National Laboratory (PNNL) modelling evaluation of the minimum number of ALCs necessary to prevent tank bumps in full-scale, partial tank laboratory experiments. The latter study also included some modelling for in-tank equipment effects on ALC use (no effect was noted). The lack of effect of in-tank hardware (such as drywells, thermocouples, etc.) on ALC operation can also be seen in photographic evidence (PNL 1979) in which the surface of the liquid waste can clearly be seen to be entirely disturbed by the ALC operation, with no null areas visible. Tank 241-AZ-101 was constructed with 22 ALCs and, using established procedures for ALC use, has never experienced a tank bump. The AWF Interim Operational Safety Requirement (IOSR) (Heubach 1996, LCO 3.4.4), converted to TWRS TSR LCO 3.3.4, requires that the ALCs be operated as soon as the temperature reaches 110 °C (230 °F) for the sludge (or the bottom of the tank) and 87.8 °C (190 °F) for the average waste solution temperature. Thus, the normal operation of the mixer pumps requires no additional controls. This TWRS TSR LCO also requires that a minimum number of ALCs be available for operation, should the temperatures exceed the TSR LCO temperature limits.

B. Off-normal Situations

A prolonged and total loss of primary ventilation could result in tank waste conditions conducive to a thermal bump. This scenario is very unlikely given the existing backup ventilation system, as well as the existence of connection ports for hook-up of an alternate exhauster. However, in the case of a total loss of ventilation, the pumps will be turned off in accordance with TWRS TSR LCO 3.2.1 which requires that all waste disturbing operations and activities within the tank stop upon a loss of ventilation in order to prevent further buildup of heat and gases. The tank bump potential arises because the ALCs are interlocked to turn off when the ventilation system is down. TWRS TSR LCO 3.2.1 requires that, whenever active ventilation is lost within a waste storage tank, actions be initiated immediately to restore ventilation.

For these off-normal situations, very conservative scoping thermal calculations (Sathyanarayana 1997) have shown that the time for the waste temperature to increase from maximum estimated initial conditions and reach local saturation is significantly greater than historical time periods of ventilation loss (previous AWF IOSR 3.4.1 time requirements of 40 hours if

ALCs were not required to be operating per AWF IOSR 3.4.4 and 16 hours if ALCs were required to be operating per AWF IOSR 3.4.4 are considered to be indicative of maximum historical ventilation outage periods). Indeed, the analysis considers the hypothetical case of having half of the area of the tank's sludge (approximately 31.5 cm [12.5 inches] thick) being non-mobilized during the mixer pump test, and being covered by freshly settled solids from the other half of the tank with loss of power, and hence loss of mixer pumps, ventilation, and ALCs. This fraction of sludge mobilization results in the maximum postulated thickness of sludge buildup in the non-mobilized zone. This would normally be an additional 15.75 cm (6.25 inches) of sludge, since it would be distributed over the entire tank area, but an additional conservatism is included that the sludge volume may be increased (or fluffed) by up to a factor of 2 because of the pumping action. This results in an additional 31.5 cm (12.5 inches) of sludge deposition, for a conservative value of 63 cm (25 inches) for the scenario. For this scenario, the time for the sludge temperature to increase from a maximum anticipated sludge temperature of 110 °C (230 °F) to sludge saturation temperature (125.6 °C [258 °F]) is greater than 53 hours, well in excess of the historical maximum for ventilation outages (16 hours). (Higher sludge temperatures before accident onset would have resulted in ALC operation, equilibrating sludge temperatures to a value closer to supernatant levels.) Moreover, this 53 hour minimum time needed to reach sludge saturation temperature conservatively assumes an instantaneous settling time for sludge after waste disturbance has ceased (actual settling time is more on the order of several days, based on sludge sample from Tank 241-AZ-101) (Gray et al. 1993).

In addition to this scoping study, empirical data from previous Tank 241-AZ-101 ALC shutdown testing show no bottom temperature peaks close to waste saturation temperatures (Winkler 1995). The average sludge temperature rose 14.9 °C (5.2 °F) over 1,296 hours (with primary ventilation on and annulus ventilation off). These data lend credence to the assertion that current controls are adequate for the performance of the Tank 241-AZ-101 mixer pump test without the need for additional controls.

3.4.2.2.3 Tank Bump Offsite and Onsite Radiological and Toxicological Consequences Analysis and Comparison to Risk Guidelines. The bounding accident analysis in Section 5.3.2.22.3 of the TWRS BIO is consistent with the Tank 241-AZ-101 assumptions. The associated calculations are documented in Board 1996.

The results are presented in Table 3-14.

The values of 2.2×10^{-3} Sv (2.2×10^{-1} rem) for the offsite radiological dose meets risk guidelines, but the value of 2.5×10^{0} Sv (2.5×10^{2} rem) for onsite radiological doses exceed the risk guidelines for the unlikely event of an unprevented, unmitigated AWF tank bump accident analyzed in the TWRS BIO.

The offsite toxicological value is below one and is within the risk guidelines. The onsite toxicological dose is above one and exceeds the risk guidelines for an unprevented, unmitigated tank bump accident.

The safety control and prevention strategy regarding the tank bump accident is to rely on the current TWRS TSR LCO 3.3.2 for temperature limits.

TWRS TSR LCO 3.3.4 for ALC operation provides additional control and prevention based on prior history of its use as AWF IOSR LCO 3.4.4 (Heubach 1996). This LCO provides an enveloping set of controls covering the behavior of the waste during and after the mixer pump test, as well as the heat load additions from the pumps and waste mobilization effectiveness.

Given several uncertainties with respect to the heat load brought to the waste by the pumps and the waste mobilization effectiveness of the pumps (i.e., amount of sludge initially mobilized and time necessary to achieve maximum waste mobilization), the safety control strategy is to: (1) maintain operation of the primary ventilation system, (2) monitor the waste temperatures (and shut-off mixer pumps per TWRS TSR LCO 3.3.2), and (3) maintain availability of the ALCs to prevent steam bubble formation and turn on ALCs if the waste temperature below 20 feet reaches 110 °C (230 °F) (in the bottom region of the tank after the pumps are turned off, or in non-mobilized areas) per TWRS TSR LCO 3.3.4.

Table 3-14. Tank Bump Radiological and Toxicological Consequences. (Excerpt from Table 5.3.2.22-1 of the TWRS BIO)

Receptor	Radiological		Toxicological	
	Consequence	Guideline	Consequence (SOF)	Guideline (SOF)
Onsite	2.5 Sv (250 rem)	5×10^{-2} Sv (5 rem)	4.9×10^{3}	1 (ERPG-2)
Offsite	2.2×10^{-3} Sv (0.22 rem)	5×10^{-3} Sv (0.5 rem)	0.73	1 (ERPG-1)

3.4.2.2.4 Tank Bump Accident Summary of Safety Class/Safety Significant SSCs and TSR Controls. The safety SSCs associated with this accident are the ALC system (Section 2.7.1.5 of this addendum), which prevents steam accumulation and rollover occurrences, and the primary tank exhaust ventilation system. Both of these systems are safety significant SSCs. Note, the TWRS BIO currently classifies the primary tank exhaust ventilation system as safety class based on the flammable gas deflagration accident. Therefore, the postulated tank bump accident described in this addendum does not change the primary tank exhaust ventilation system safety classification.

The following existing controls are preventive measures against the AWF tank bump (note, there are no mitigative controls):

- Monitor waste temperature and turn off mixer pumps when the top 15 feet of waste reaches 90.6 °C (195 °F) or the waste below 15 feet reaches 101.7°C (215 °F) (TWRS TSR LCO 3.3.2);
- Monitor waste temperature and operate ALCs when the waste temperature below 20 feet reaches 110 °C (230 °F) and the average waste solution temperature reaches 87.8 °C (190 °F) (TWRS TSR LCO 3.3.4);
- Upon total loss of the ventilation system, turn off the mixer pump(s) to control heat addition to the tank and potential tank

over-pressurization and comply with requirements of TWRS TSR LCO 3.2.1.

3.4.2.3 Breach of Containment. The following mechanisms (i.e., flammable gas deflagration, dropped equipment, internal missiles, erosion, and material degradation due to high temperatures) due to mixer pump operation result in scenarios already discussed in Squires 1987 and the TWRS BIO. Therefore, no additional consequence calculations were performed.

3.4.2.3.1 Flammable Gas Deflagration. This section discusses the hazards and controls associated with the generation, accumulation, storage, release, and postulated combustion of flammable gases in the tank headspace. This hazard was first identified as an Unreviewed Safety Question (USQ) in 1990. This USQ was updated on November 1, 1996 (Serrano 1996) to account for increased understanding of the nature of the hazard and the affected facilities. The updated USQ addresses potential flammable gas hazards in the AWF tanks. The flammable gas USQ remains open for the AWF (Serrano 1996) as of this writing.

The Flammable Gas Justification for Continued Operation has been incorporated in the BIO as Appendix E and in the TSRs as Administrative Controls (AC) 5.9, 5.10, and 5.11. This BIO Addendum affirms the applicability of the RL approved controls for the mixer pump test. This affirmation is required for two reasons. First, the initiation of the mixer pump test has the potential to release any flammable gas that has accumulated in the waste matrix and is trapped beneath the waste surface. Second, operation of the mixer pumps will increase waste temperature and will, therefore, increase the rate of flammable gas generation. This results in an increase in the chronic (or "steady state") gas release rate to the tank vapor space.

Radioactive waste generates hydrogen through the radiolysis of water, thermolytic decomposition of organic compounds, and corrosion of the tank's carbon steel walls. Radiolysis and thermolytic decomposition also generate ammonia. Additional flammable gases (such as methane) and an oxidizer (nitrous oxide) are generated by chemical reactions between various degradation products of organic chemicals originally present in the tank. Volatile or semi-volatile organic chemicals also produce organic vapors.

The gas generated through these processes may be released continually to the tank vapor spaces (historically referred to as steady state flammable gas generation) or be retained by the tank's waste matrix, potentially resulting in an episodic gas release event (GRE). Steady state flammable gas generation from radiolysis, chemical decomposition, and corrosion is expected from all of the AWF tanks. With a GRE, gas is retained in the tank's waste matrix until it is spontaneously released or a release is induced during waste disturbing activities, such as mixer pump operations.

An accident scenario for a representative flammable gas deflagration resulting from a GRE in an AWF tank is provided in the TWRS BIO, Section 5.3.2.14.1. The source terms and consequences associated with this event were developed in Van Vleet 1996b. The representative GRE accident analysis assumes the release and ignition of sufficient trapped gas such that

the resulting energy creates unfiltered release paths, but is insufficient to collapse the tank dome. A gas release of this size has never been observed, and is not expected for the current waste contents of Tank 241-AZ-101. Therefore, the energy associated with the deflagration of such a release is considered bounding for Tank 241-AZ-101 with its current waste contents.

The source term selected for the representative GRE accident analysis is based on the assumption that only the liquid component of the waste would be released by the deflagration event. While likely to be valid for a quiescent initial waste condition, the liquid source term assumption may be questioned for the condition where mixer pump operation mobilizes a significant portion of the waste solids. In this case, it may be argued that some fraction of the release due to a deflagration consists of waste solids. As seen in Van Keuren 1996, the existence of a solids component in the source term would result in an increased radiological dose at the receptor locations. Determination of the fraction of solids that may be entrained in the release is an additional uncertainty associated with this event.

As indicated in the TWRS BIO, the consequence analysis for the representative GRE is not considered bounding. However, at this point in the resolution process of the open USQ, the analysis serves to indicate the need for an Authorization Basis control strategy. As provided in the current authorization basis (TWRS BIO), the control strategy is prevention. Controls related to monitoring and ignition sources are assigned to specific facilities and tanks on the basis of observed and estimated gas release behavior. These controls are not specifically derived from GRE consequence analysis, and would not be changed by variations in the magnitude of the calculated consequences presented in the TWRS BIO. For information, the TWRS BIO analysis results are summarized in Table 3-15 of this addendum, excerpted from Table 5.3.2.14-1 of the TWRS BIO. The detailed discussion of the consequence analysis is provided in Section 5.3.2.14 of the TWRS BIO.

The specific monitoring and ignition source controls applicable to the AWF tanks are driven by assignment of the AWF tanks to flammable gas Facility Group 2 (TWRS BIO) and the nature of activities and operations performed in the tanks. The mixer pump test does not alter the assignment of Tank 241-AZ-101 to Facility Group 2. In addition, performance of the test falls within the authorization basis definitions for the nature and location of activities and operations. Therefore, with respect to GRE behavior that may be associated with the mixer pump test, the existing authorization basis monitoring and ignition source controls continue to apply.

Thus, the strategy to prevent or mitigate potential hazards associated with flammable gas in Tank 241-AZ-101 during the performance of the mixer pump test involves implementation of the controls detailed in the TWRS BIO. The BIO strategy is to expeditiously implement achievable and practical controls to manage postulated flammable gas risks. While doing so, progress towards safety issue resolution and USQ closure will continue to concentrate on remaining uncertainties regarding the quantification of risk and effectiveness of control strategies.

The controls are aimed primarily at prevention of ignition of flammable gas (although certain aspects of the control strategy are mitigative in

nature). Provisions for ventilation serve to prevent accumulation of chronically released gases and possibly reduce the time at risk assuming the occurrence of a spontaneous or induced gas release. Flammable gas monitoring requirements serve to validate ventilation effectiveness as well as prevent or halt manned activities when margin of safety is considered to be insufficient (i.e., conditions are such that the flammable gases exist in concentrations greater than 25% of the lower flammability limit). Ignition controls related to work practices and equipment requirements serve to eliminate, to the greatest extent practical, ignition sources.

This three-pronged control strategy (ventilation, monitoring, and ignition source control) is assumed to be effective in preventing the accumulation of flammable gases where ignition sources may be present or to eliminate ignition sources where flammable gases may potentially be present.

Steady State Generation

The performance of the tests associated with running the mixer pumps could potentially affect the steady state generation of flammable gases. Steady state flammable gas generation is dependent on several parameters including decay heat load, waste temperature, organic complexant chemical concentrations, and nitrate/nitrite concentration. Running the mixer pumps will increase the waste temperature, potentially resulting in increased steady state flammable gas generation.

The implementation of the TWRS BIO/TSR control strategy during mixer pump operation in Tank 241-AZ-101 provides ventilation to prevent accumulation resulting from a steady state gas release. However, the safety margin provided by compliance with the ventilation requirements of the TWRS TSR flammable gas controls (TSR AC 5.9, 5.10, and 5.11) may be decreased as a result of the mixer pump test. This is due to the expected increases in waste temperature resulting from mixer pump heat input as well as a possible reduction in waste heat conduction during a potential fluffed sludge condition (see Section 3.4.2.2.2B of this addendum) during initial settling following operation of the mixer pumps. The increased waste temperature can result in an increased hydrogen generation rate.

In order to provide some degree of confidence that the ventilation flow and TWRS TSRs for ventilation restoration are adequate to prevent a flammable gas deflagration resulting from the increased hydrogen generation rate, a brief review was performed of the BIO supporting calculation (Hu 1997). This calculation note provides a numerical analysis for estimating the steady-state hydrogen release rate for double-shell tanks. This numerical analysis provides various equations for the three contributors of hydrogen generation; radiolysis, thermolysis, and corrosion. Of the three, thermolysis will vary according to temperature as indicated in the following equation (Hu 1997 Equation 6):

$$G_{chemical}=G_{bl} * M * \left(\frac{TOC}{TOC_{bl}}\right) * \left(\frac{Al}{Al_{bl}}\right) * \exp\left[-\frac{Ea}{R} * \left(\frac{1}{T}-\frac{1}{T_{bl}}\right)\right]$$

where:

bl	=	baseline tank, 241-SY-103
G	=	hydrogen generation rate, mole/(kg * day) (baseline 3.5 E-7)
M	=	total mass of liquid, kg
TOC	=	total organic carbon concentration
Al	=	total aluminum concentration
Ea	=	baseline tank hydrogen generation activation energy (91,000 J)
R	=	gas constant (8.314 J/mole/ °K)
T	=	temperature, °K (baseline = 304.7 °K)

Using the numbers contained in the calculation note for 241-AZ-101 but substituting 110 °C (230 °F) as a bounding temperature for the mixer pump test yields 1.77E-5 m^3/s (0.0376 CFM). This added to the other two hydrogen generation components yields 2.63E-5 m^3/s (0.0557 CFM).

Equation 8 of Hu 1997 determines the time to reach a specified hydrogen concentration and Equation 9 determines the minimum ventilation flow rate to keep the hydrogen concentration below a specified limit. Using the revised flow rate above yields 8.25 days to reach 25% of the LFL (8.09 days using Project W-030's high heat flow rate of 0.24 m^3/s [500 CFM]). The 7 day limit of 241-SY-101 still bounds the completion time of Recovery Action A.3 of TWRS TSR LCO 3.2.1. The minimum flow rate to keep the hydrogen concentration below 25% of the LFL is 2.8 E-3 m^3/s (5.9 CFM).

This evaluation provides some confidence in the adequacy of the ventilation system to prevent the steady state accumulation of flammable gas to levels above the LFL since the minimum ventilation flow rate provided by the existing 241-A-702 AWF ventilation system ranges from approximately 400 to 600 CFM and the minimum ventilation flow rate provided by the W-030 ventilation system is approximately 100 CFM.

The increased gas generation rates will be reduced to their prior values after temperatures have re-stabilized to the lower, typical values measured today (within 30 days, extrapolating data from Sathyanarayana 1997).

Thus, the implementation of the TWRS BIO/TSR control strategy during mixer pump operation in Tank 241-AZ-101 in conjunction with the application of the TWRS TSRs provides adequate controls to prevent a flammable gas deflagration as a result of steady state flammable gas generation.

Gas Release Event

The performance of the mixer pump test could also potentially result in a gas release event (GRE). This test involves running the mixer pumps which is defined as a global waste disturbing operation (TWRS BIO). Waste disturbing activities represent the primary means of releasing gas retained in the waste matrix resulting in a GRE.

The controls required by the TWRS BIO are graded based on the tank Facility Group assignment and the nature of the operation or activity. The AWF tanks are assigned Facility Group 2 status. However, the assignment of Facility Group 2 is based on consideration for future use of the tanks rather than current waste inventory. This facility assignment means that GRE controls are focused on dome space intrusive and waste intrusive regions during non-waste disturbing or local waste disturbing operations. Controls are extended to ex-tank intrusive regions during global waste disturbing operations. This test involves running the mixer pumps which is defined as a global waste disturbing operation. Therefore, the expanded controls are required during operation of the mixer pumps.

The equipment, materials, and work practices associated with this project were evaluated by the Flammable Gas Equipment Advisory Board (FGEAB) (Smet 1997) to verify compliance with the Ignition Source Control Sets #1 and #2 as detailed in the TWRS BIO. The FGEAB evaluation of the equipment, materials, and work practices associated with this project determined that the applicable Ignition Source Control Sets were satisfied in all cases, including the case of carbon steel profile thermocouples and/or transfer pumps swaying in the carbon steel risers (Smet 1997). This determination also concluded the 300 hp induction drive motor and the 1/3 hp induction rotation motors mounted on top of the risers met the applicable Ignition Source Control Sets.

Comprehensive compliance with the applicable Ignition Source Control Sets not only minimizes the potential for an ignition source following a steady state gas release, but also minimizes the potential for an ignition source following a GRE. This control implementation provides an additional level of safety in order to prevent a flammable gas deflagration even if a large GRE were to occur. However, a large GRE is not expected to occur during mixer pump operation. These expectations are based on the following information:

- Tank 241-AZ-101 currently contains only a small amount of sludge, approximately 35,000 gallons, which limits the maximum amount of potentially retained gas to small amounts (Hodgson 1995).

- A conservative scoping analysis indicates that if the sludge in Tank 241-AZ-101 retained and released flammable gas in the same volumetric proportion as did Tank 241-SY-101 (prior to mitigation), then a GRE would be insufficient to cause a well mixed headspace to exceed 25% of the LFL (Hodgson 1996). This scoping analysis uses barometric pressure versus tank level rise to estimate the amount of trapped gas. The gas release event used in Hodgson 1996 assumed 25% of the trapped gas was released and its hydrogen concentration was 97% unless data supported a reduction. Analysis of Tank 241-AZ-101 resulted in a steady-state gas generation of 0.16% LFL and a worst case episodic release of 20% of the LFL (Hodgson 1996 Table 2-1). Also, Hodgson 1996 reported no correlation seen between barometric pressure changes and surface level rise for Tank 241-AZ-101 (i.e., minimal amounts of trapped gas).

- An evaluation of actual amounts of retained gas using the limited data available indicates that the amounts of retained gas in Tank 241-AZ-101 are very small to non-existent (Hodgson 1996).

- Even though mixer pump operation is defined as global waste disturbing, the test is performed in phases of increasing expected sludge mobilization. Complete and rapid mobilization of all of the sludge is not expected during the first phases of the test.

- After the sludge has been re-distributed and settled, it should not retain significantly more gas than prior to the test.

In the time period between waste sludge mobilization and complete settling, the sludge volume may be larger than it is currently. That is, it will be less compacted. This may result in an increase in the total amount of retained gas and may alter the retention and release (i.e., GRE) behavior postulated as the basis for the flammable gas controls. GRE behavior in the partially settled sludge is not postulated to be worse than the "small" spontaneous GRE or the "large" induced GRE postulated for Facility Group 2 tanks in the TWRS BIO.

Thus, the implementation of the TWRS BIO/TSR control strategy during mixer pump operation in Tank 241-AZ-101 provides adequate control to prevent a flammable gas deflagration as a result of a GRE, even though a large GRE is not expected to occur.

Table 3-15. Radiological and Toxicological Consequences of a Flammable Gas Deflagration. (excerpted from Table 5.3.2.14-1 of the TWRS BIO)

Receptor	Radiological		Toxicological	
	Consequence	Guideline	Consequence (SOF)	Guideline (SOF)
Onsite	4.4×10^{-2} Sv (4.4 rem)	5×10^{-3} Sv (0.5 rem)	8.2×10^{2}	1 (ERPG-1)
Offsite	4×10^{-5} Sv (4×10^{-3} rem)	1×10^{-3} Sv (0.1 rem)	0.7	1 (PEL-TWA)

3.4.2.3.2 Dropped Equipment. Consequences of scenarios for dropped equipment were not analyzed in this addendum. No equipment is planned to be installed or removed during the test. Structural and fatigue analysis for other in-tank components is contained in Section 2.4.4 of the TWRS BIO Appendix B. If non-safety-related in-tank process equipment is damaged through the use of the mixer pumps, an evaluation will be performed to determine the impact of restarting or continuing the test.

3.4.2.3.3 Internal Missile. The pumps have an installed screen (5 cm [2 in] openings) to keep out items that have the potential for damaging the impeller (Nordquist 1997). Any debris items smaller than the screen openings would pass directly through the pump, and have the potential to exit the pump discharge at approximately 18 m/s (58 ft/s). An assessment has been made, based on qualitative engineering judgement, that these potential missiles

could not damage the tank wall or safety-related in-tank equipment. This assessment is based on: (1) the discharge height of the mixer pump from the tank bottom (43 cm [17 in]) is below the level of any safety-related equipment; (2) the pump discharge is horizontal (i.e., does not angle upward); and (3) the tank wall is greater than 4.6 m (15 ft) distant from the discharge points of the pump. This distance, combined with the discharge velocity and the 5 cP assumed viscosity of the waste (Nordquist 1997) makes it highly unlikely that any potential missile will retain sufficient energy to impart damage to a 1.3 cm (1/2 in) tank wall.

An assessment was performed to determine whether a pump impeller failure (the largest potential missile) would penetrate the pump housing and subsequently penetrate the tank wall. It was determined in LANL 1996 that, at an approximate impeller speed of 1,200 rpm (the maximum pump speed) the resulting fragment could not penetrate the pump casing and therefore, could not impact the tank. It was also concluded in the same analysis that if the entire pump impeller (13.0 kg [28.7 lb]) were separated from the shaft and dropped axially downward in the tank, the mass of the impeller would not be large enough to penetrate the tank. The mass of the 241-AZ-101 mixer pump impeller is 65.7 kg (144.5 lb) but is much closer to the tank bottom (50 cm for 241-AZ-101 versus 370 cm for 241-SY-101). The 241-AZ-101 mixer pump impeller is not expected to achieve any significant velocity from dropping due to its short height above the floor. Another conclusion reached in LANL 1996 was that the dropping of small parts up to a mass of 45.4 kg (100 lb) would not affect the tank's integrity.

3.4.2.3.4 Erosion. Smith and Elmore 1992 evaluated the effect of an impinging slurry jet on the corrosion rate of the tank wall and floor. Results of the tests indicate that, because of the action of the mixer pump slurry jets, the mixer pump activity will moderately accelerate corrosion of the tank wall and floor. A time averaged corrosion rate of approximately 4 mils/yr was calculated for the highest jet velocity tested for the Neutralized Current Acid Waste (NCAW) test (4.6 m/s [15 ft/s]). The maximum total base metal loss for the 150-day NCAW test was approximately 1.6 mils. Analysis of the weight loss data from the NCAW test coupons with the oxide layer intact indicates it is likely that a lower corrosion rate of 2.5 mils/yr or less may occur over the long term during actual waste mixer pump operations. This reduction in the corrosion rate is due to the thickness of the oxide layer within the tank. The tank surfaces are heavily oxidized following fabrication as a result of the stress relief process and since their fabrication the tanks have contained corrosive wastes to further increase the impermeability of the layer.

For the mixer pump test, approximately only 1,300 hours are planned, including many hours at reduced jet velocities. Smith and Elmore 1992 also provides data at 42 days, which is representative of the planned mixer pump test duration. The 42-day results are less than 17% of the 150-day values. Therefore, for the mixer pump test, between 0.27 and 0.68 mils of base metal loss is predicted, depending on which of the above 150-day values is used. For the short duration use of the mixer pumps addressed by this safety analysis, and tank walls in Tank 241-AZ-101 that were constructed to be a minimum of 1.3 cm (1/2 inch [500 mil]) thick, the predicted erosion-corrosion of the tank steel is insignificant.

3.4.2.3.5 Material Degradation due to High Temperatures. The TWRS TSR controls include a waste temperature limit of 121.1 °C (250 °F) (TWRS TSR Safety Limit [SL] 2.1.1) to protect against runaway exothermic organic nitrate chemical reactions. This limit is less than the previous AWF IOSR limit of 148.9 °C (300 °F), which was designed to preserve the concrete tank wall integrity from temperature excursions above 176.7 °C (350 °F) (AWF IOSR SL 2.2). The risk associated with exothermic organic nitrate chemical reactions is minimal for the mixer pump test in Tank 241-AZ-101 because of three things: (1) the low organic content of the tank of approximately 0.92 weight percent in the solids and 0.09 weight percent in the liquid (Hodgson 1995), (2) none of the mixer pump activities have any potential for reducing the water content of the waste solids, and (3) the use of TWRS TSR LCO 3.3.2 provides protection for TWRS TSR SL 2.1.1 as described in the bases for TWRS TSR LCO 3.3.2 (Noorani 1997).

3.4.2.3.6 Tank Dome Collapse Accident due to Overload. The mixer pump test increases the tank dome load substantially. However, the total of the previous load and the new load placed on the tank by the Project W-151 equipment is below the enhanced total load limit permitted by JCO 1995. A structural analysis was performed (Moody 1996) that includes design calculations for the concrete pad, the steel support frame, the extension riser and riser lifting bails, and the 20.7 MPa (3,000 lbf/in^2) spray wash piping system (refer to Figure 2-2 of this addendum for mixer pump support). Dead load, live load, jet impingement and seismic loads were considered. The mixer pump and mounting plate are bolted to the support frame that is anchored to a concrete pad. A tank riser extension is provided to connect the existing tank riser with the pump support assembly. The pump support system is designed to prevent the transfer of loads directly from the pump to the riser. Thus, the pump is supported by its own on-grade foundation, and is independent of the buried AZ-101 pits and risers.

The Project W-151 Functional Design Criteria (Nordquist 1997) and Supplemental Design Requirements Documents (Kohlman 1993) establish the design basis loads and load combinations by reference to the Hanford Plant Standards Standard Design Criteria (SDC) 4.1[2]. SDC 4.1 requires dynamic analysis for Safety Class 2 systems unless otherwise justified. The mixer pump support assembly and riser extension have been classified as Safety Class 2 (Kidder 1994). (See Chapter 4 of this addendum for a correlation between the previous Hanford Site safety class numbering system and the DOE STD 3009-94 system.) Because of this, the mixer pump support assembly and riser extension were analyzed using a "static equivalent" safety class 2 approach.

The mixer pump support foundation earthquake design loading (0.25 g Peak Horizontal Ground Acceleration) complies with SDC 4.1, Rev. 11 for Safety Class systems. A Peak Acceleration factor of 0.25 g was also applied to the concrete foundation since both of these foundations support the Safety Class 2 riser extension (Kidder 1994). Calculations of the earthquake loads transferred from the 241-AZ-101 mixer pump to the support frame and concrete foundation are included in the directional load combinations (Moody 1996).

---

[2]Hanford Plant Standards Standard Design Criteria (SDC) 4.1 has been replaced by GC-LOAD-01, "Design Loads For Facilities."

Since the mixer pump assembly is designated safety class 3, loading criteria of Conrads 1996 were used to determine the magnitude of load transfer. Using 0.25 g peak, criteria of Conrads 1996, and the fact the mixer pumps are flexible resulted in the following acceleration or "g" factors used in the analysis: (1) Horizontal = 0.675 g and (2) Vertical = 0.45 g, both in excess of those required for Safety Class 2 components.

The results of the analysis show that all components of the support system are structurally adequate to support the mixer pump for both normal service and extreme loading conditions. Therefore, the Tank Dome Collapse accident is classified as being Beyond Extremely Unlikely, and no consequences are calculated.

3.4.2.3.7 Seismic. The results of the HazOp study given in Appendix 3A show that the deformation or failure of the mixer pump shaft due to a seismic event is extremely unlikely. Moody 1996 evaluated the mixer pump support assembly, riser extension, concrete pad, steel support frame, riser lift bails, and the 20.7 MPa (3,000 lbf/in^2) spray wash piping system. Dead load, live load, jet impingement, and seismic loads are considered in the design calculations.

The 241-AZ-101 mixer pump support assembly, extension riser, and spray wash system structural analysis results show that the pump support and riser configuration are acceptable for the applied design requirements. (See Section 3.4.2.3.6 of this addendum for an additional seismic discussion.)

A breach of containment caused by the deformation or the failure of the mixer pump shaft due to a seismic event is then Beyond Extremely Unlikely and no consequences are calculated.

During and after a seismic event, the scenario could occur wherein the primary ventilation fails (as described in the TWRS BIO Section 5.3.2.23) either through electrical power outage or ventilation system mechanical failure, but the mixer pumps are left running, either through human error or a situation in which the operator is prevented, for some reason, from stopping the pumps (injury, etc.). In this scenario, the concern would be for the continued addition of pump energies to the tank with a reduced heat removal capability from the tank to raise the waste temperatures to the point where tank bump would become a potential. The risk associated with this scenario, however, is bounded by that of the HEPA filter failure due to over-pressure, discussed in Section 3.4.2.1.2 of this addendum. The frequency of the design basis earthquake, from the TWRS BIO, is 1×10^{-3}. This frequency, combined with the frequency reduction associated with the pump being left running after the seismic event in which the ventilation system is lost (contrary to controls), brings the accident into the extremely unlikely category. The consequences of this accident are bounded by the 24 hour emission calculated for the HEPA failure scenario, since Tank Farms Emergency Response personnel, whose function it is to verify equipment status (in this case, that the mixer pumps are off in accordance with requirements) would have completed their checks well before the 24 hour period. Also, the onset of any potential tank bump will be alleviated by the mixer pump action over that of a quiescent tank. Because of these prevention/mitigation factors, this accident is felt to be adequately bounded, and no further analysis is required.

3.4.2.4 Criticality. The Criticality Safety Evaluation Report (CSER) (Vail 1997) documents an evaluation of the criticality safety implications of the mixer pump test to be performed in Tank 241-AZ-101. The CSER does not identify a scenario associated with the mixing test that could lead to a criticality. It is concluded that testing the mixer pumps will not sufficiently increase the concentration of plutonium in any portion of the waste contained in 241-AZ-101 to pose a criticality safety concern.

Mixing the waste will disperse the plutonium, and none of the mechanisms capable of increasing plutonium concentration appear capable of overcoming the dispersal and blending mechanisms. The calculated k-effective (k_{eff}), when limited experimental data exist for a similar system and relatively large but reasonable interpolations or extrapolations are necessary, shall not exceed 0.95 (WHC-CM-4-29). For solid tank waste with a conservative composition, as defined in Rogers 1993, the plutonium concentration corresponding to a k_{eff} of 0.95 is 2.6 g/L. This concentration of plutonium is known as the subcritical limit with respect to tank waste.

A comparison of the concentration of plutonium in 241-AZ-101 sludge and the subcritical limit is valid when the actual solids are shown to be less reactive than the composition of the conservative waste model (Rogers 1993). The measure of reactivity is determined by comparing the macroscopic absorption cross section of the waste in Tank 241-AZ-101 to the macroscopic absorption cross section of the conservative waste model solids. The absorption cross section of the waste based on sample analysis is more than double the cross section of the conservative waste model solids. So, the subcritical limit for the actual waste solids will be higher than 2.6 g/L and a correlation between actual and calculated plutonium concentrations in the waste to the subcritical limit is conservative.

Based on waste transfer data reported in Vail 1997, the highest measured plutonium concentrations from sample analysis in the supernate and the sludge of Tank 241-AZ-101 are 0.000019 g/L and 0.175 g/L, respectively, and the highest plutonium concentration in a waste batch transferred into the tank was 0.0242 g/L. The transfer data also indicates that a very thin layer of solids may reside in the tank with a plutonium concentration of up to 0.63 g/L. It follows that the sample data and waste transfer data support the conclusion that the margin of criticality safety in the undisturbed solids in the tank ranges from a factor of 4.1 to 14.8. Also, the waste composition based on the sample analysis indicates that the neutron absorbing capacity of the non-fissile constituents is 16 times the amount of absorbers necessary to assure sub-criticality for any plutonium concentration.

The primary criticality safety aspect of mixing the waste solids is whether the plutonium remains intimately associated with the neutron poisons while the solids are suspended, and after settling. The exact mechanism which holds the plutonium in the 241-AZ-101 solids is not known, but it is reasonable to suggest that many different mechanisms contribute (i.e., precipitation, adsorption, agglomerated solids, etc.). The preferential segregation of Pu from the other hydroxides is most likely prevented by solid agglomerates containing Pu at very large absorber-to-Pu ratios. Whyatt et al. 1996 explains that hot-cell settling tests and flocculation calculations lead to the conclusion that particles are flocculated under

normal waste tank conditions, and interaction potentials promote a very rapid flocculation rate, even after the agglomerates are broken up by hydraulic forces such as mixer pumps. The investigation into Pu chemistry in waste tank environments does not lead to any scenario which suggests a criticality in the solid phase of the waste is possible.

An evaluation of the criticality safety aspects of mixing the waste in 241-AZ-101 must also investigate the consequences of Pu segregation due to the waste containing discrete particles of PuO_2. Serne et al. 1996 provides "...calculations that show, for the most realistic cases, that the level of segregation of fissiles from neutron absorbers was about a factor of 2.5." This value is the result of particle segregation predictions using the Transient Energy Momentum and Pressure Equations Solutions in Three Dimensions (TEMPEST) Fluid Dynamic Model, the Subsurface Transport Over Multiple Phases (STOMP) code (a simplified one-dimensional stagnant settling model), and mixing experiments which assess particle segregation due to size. For a plutonium concentration increase by a factor of 3 due to particle segregation during settling, the highest plutonium concentration for a thin layer is 1.889 g Pu/L, which is less than the subcritical limit.

Another angle of investigation includes a determination of the consequences of pulling waste with the highest estimated Pu concentration into the mixer pump. The expectation is that the waste layer with the calculated 1.889 g Pu/L will mix with layers of lower Pu concentration resulting in an overall lower average, but the conservative approach is an evaluation which assumes that only the high Pu concentration waste is in the pump. The volume of the mixer pump housing is approximately 134 L (Nordquist 1996). So, at the highest plutonium concentration of 1.889 g Pu/L, only 253 g of plutonium can reside in the pump at any one time. Hence the plutonium concentration is less than the subcritical limit of 2.6 g Pu/L and the total mass of plutonium in the pump is less than the minimum critical mass of plutonium of 520 g.

Modeling used in the CSER was conducted with extremely conservative assumptions:

- The realities of agglomerate formation and their behavior were ignored.
- The presence of neutron absorbers was ignored.
- Mixing of AY-102 and AZ-101 by operation of the air lift circulators (ALCs) was ignored.
- The highest plutonium concentration of the four layers in C-106 was used for modeling.

Based on these assumptions, modeling was conducted with the TEMPEST three-dimensional code to predict the maximum plutonium concentration in the initial settling of solids, the maximum concentration in the pump housing, and the maximum concentration in settled solids after pumping. A one-dimensional code was also used to bound simple settling phenomena, although the one-dimensional approach is not considered realistic, as described in the preceding section.

A summary of the principal concentration factors (CF) used in the modeling is as follows:

- Highest CF in 1-dimensional model using the reported size range of particles for C-106, AZ-101, and AY-102: 10 (rounded from 9.3)
- Highest CF in 3-dimensional TEMPEST model: 3 (rounded from 2.5)
- Highest CF in large pump housing (AZ-101): ~50%
- Effective CF used for all three tanks: 18 (a CF of 6 is used to account for the maximum/average concentration in any layer in the tank and is combined with an additional CF of 3 to account for the maximum segregation by settling as predicted by the TEMPEST code for the largest of particulates).

Finally, an attempt was made to determine if undisturbed waste presently stored in tanks exhibits any indication of increasing plutonium concentration at the bottom of settled sludge. The first such review was made by Braun et al. 1994. That review concluded that no correlation of plutonium concentration with vertical displacement in the tanks could be shown.

Another attempt to determine a plutonium concentration correlation with depth in tank sludge was carried out in support of the CSERs for the W-320 and W-151 projects. Data was requested from the TWRS Characterization Data Base for sludge tanks from which full depth sample cores had been obtained and analyzed for either plutonium concentration or gross alpha activity. Three such tanks were found: B-203, B-204, and U-105. Plots of alpha activity against segment number (proportional to core depth) are shown in Figures 3-1 through 3-3 of this addendum.

Tanks B-203 and B-204 received metal wastes from B-plant through the 224B concentrator. Both tanks are 50,000 gallon capacity, both are near full, and both are administratively stabilized and isolated. Neither tank has been jet pumped. Both tanks received their last transfers in 1976. They are reasonably good examples of undisturbed sludge tanks. As readily observed from Figures 3-1 and 3-2 of this addendum, there is no evidence of plutonium tending to concentrate more toward the bottom.

Tank U-105 once held T-Plant waste, but that was sluiced out for uranium recovery in 1956. Since 1956 there have been three different regions of waste added to the tank; (1) Redox high level waste (coating waste) was added from 1956 to 1961, (2) The tank then received evaporator bottoms from 242-T, and (3) After 1975 the tank again received high level waste from Redox. The profile shown in Figure 3-3 of this addendum is consistent with this history. Redox high level waste is expected to contain about 0.4% of the plutonium in the irradiated fuel. However the 242-T evaporators processed waste tank supernate containing very little plutonium and resulting in relatively low plutonium concentrations even in the evaporator bottoms.

It appears most likely that the actual behavior of plutonium in tanks is typified by B-203 and B-204, namely that there is no evidence of a trend to concentrate plutonium closer to the bottom of a tank. Similarly, the

differences in concentration shown by Tank U-105 in Figure 3-3 of this addendum can be completely explained by the historical waste receipt record. If it is argued that the "trend" exhibited for the lower half of U-105 is due in whole or in part to a plutonium concentrating mechanism, then such concentration is roughly consistent with the CF value used in the analyses, i.e., a factor of 18.

The scenarios evaluated, the data presented, and analysis of actual tank data support the conclusion that a large margin of criticality safety exists in waste Tank 241-AZ-101 and the mixer pump test will not pose a criticality safety concern. An added layer of conservatism to this conclusion is that allowances for the quantity of ^{240}Pu in plutonium concentrations has not been taken. Plutonium-240 has a substantial neutron capture cross section, and so will decrease the reactivity of the waste.

Because this scenario is considered to be beyond extremely unlikely, no further study is required.

3.4.3 Beyond Design Basis Accidents

No BDBAs were evaluated for the mixer pump test. Because the test procedure is of relatively short duration (approximately 1300 hours), the identification and evaluation of BDBAs was judged to be unnecessary. This judgement is consistent with the graded approach implementation of DOE 5480.23.

Figure 3-1. Tank B-203 Alpha Activity by Core Segment. (Sludge)

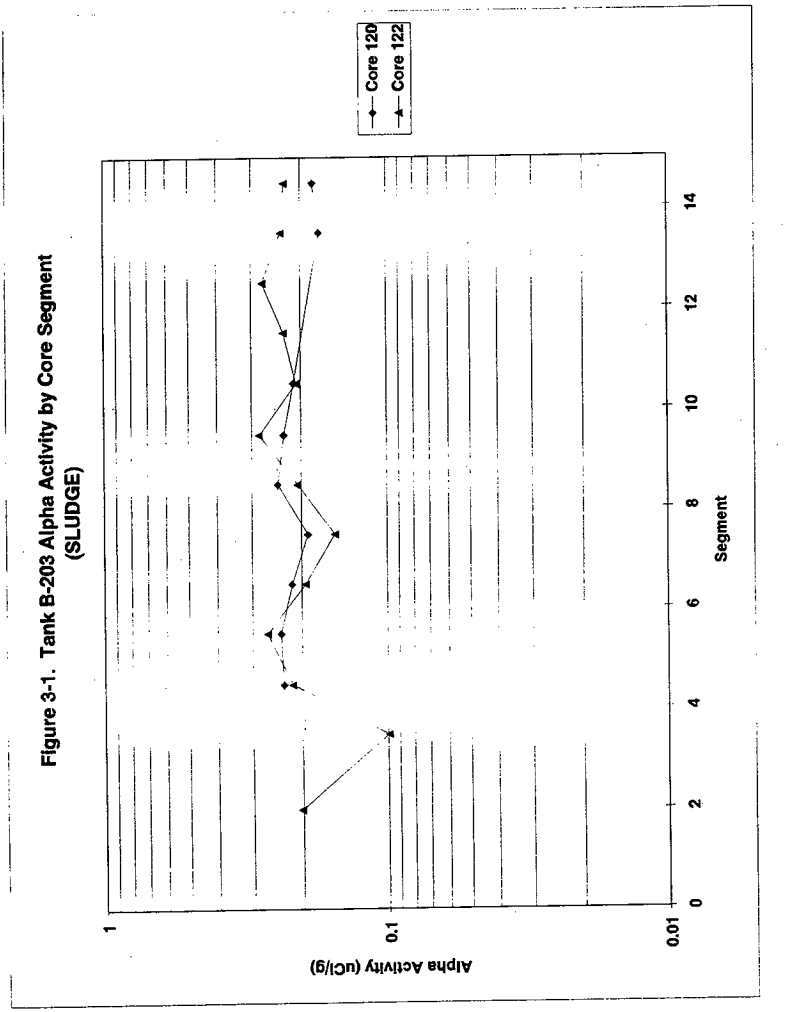

Figure 3-2. Tank B-204 Alpha Activity by Core Segment. (Sludge)

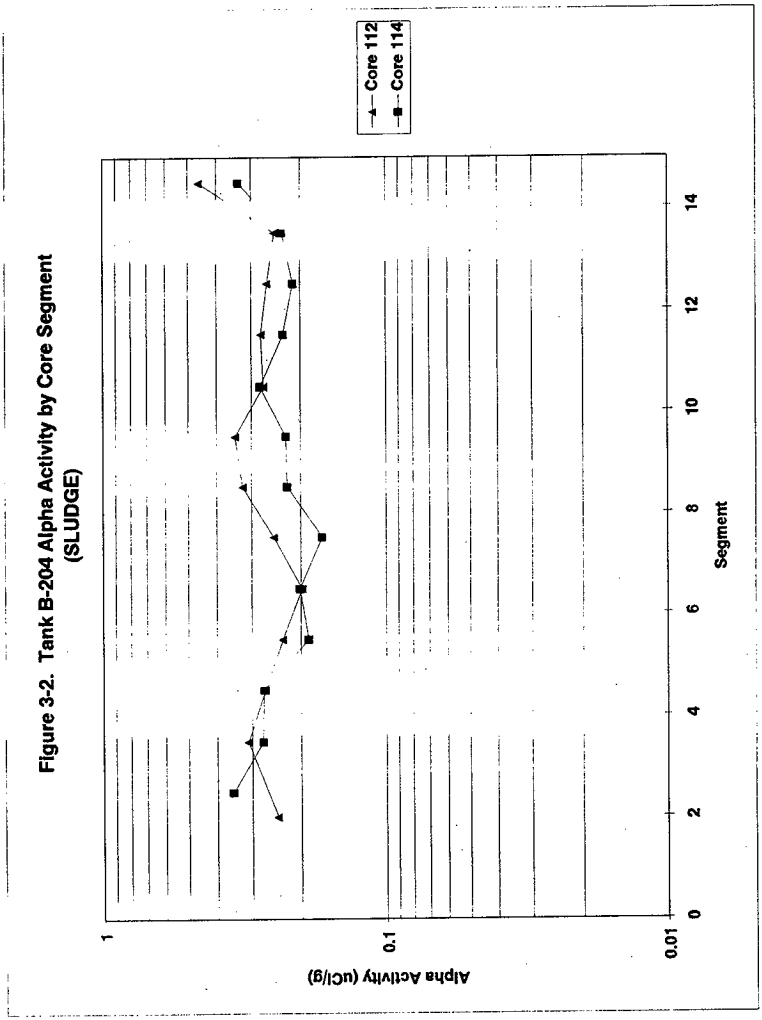

Figure 3-3. Tank U-105 Alpha Activity by Core Segment (Sludge: Fusion Digest).

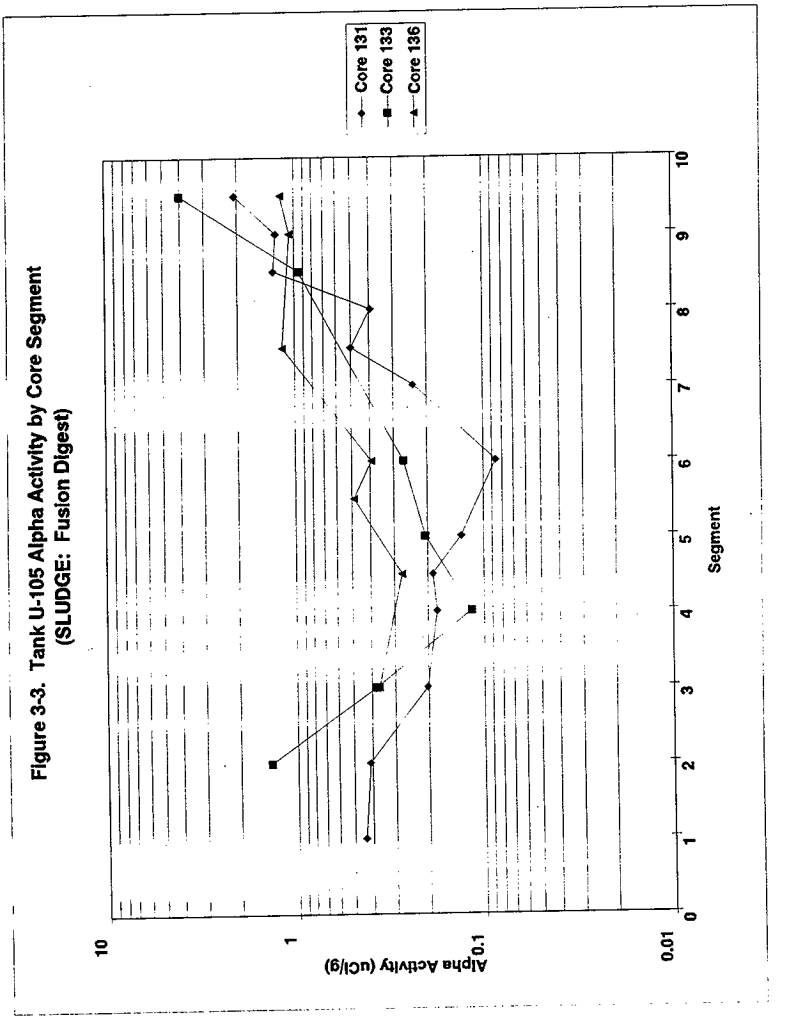

This page intentionally left blank.

4.0 SAFETY SYSTEMS, STRUCTURES, AND COMPONENTS

The safety classifications for the Project W-151 systems, structures, and components (SSC)s were determined in the project preliminary safety analysis report (Bourger 1993) and remain unchanged as a result of this safety document. As documented in Chapter 3 of this addendum, failure of the added equipment does not cause unacceptable consequences. Since all previous analyses for the 241-AZ-101 mixer pump test have used the former WHC safety classification class 1, 2, and 3 system, the use of the term "Safety-Significant" as delineated in DOE-STD-3009-94 is used interchangeably with Safety-Class 2 (SC-2) and Safety-Class 3 (SC-3) for the new SSCs added for the 241-AZ-101 mixer pump test. The highest safety classification assigned was Safety-Class 2 which was assigned to the mixer pump support system, though this system was analyzed to equivalent Safety-Class 1 seismic criteria. Refer to Table 4-1 following for an excerpted listing of the added project SSCs from Bourger 1993. Refer to Section 2.1 of the TWRS BIO for conversion to safety significant.

The existing tank farm SSCs remain unchanged except for the air lift circulator system for Tank 241-AZ-101. As a result of safety analysis in Chapter 3 of this addendum, the air lift circulator system and the air lift circulators in Tank 241-AZ-101 require a designation change, previously identified as IOSR related equipment (Kidder 1994) but now perform a Safety-Class 2 or Safety-Significant function based on the outcome of the tank bump scenario (the mixer pump process test does not change the tank bump outcome described in the TWRS BIO). This equipment (including support and ancillary equipment systems as discussed in Section 2.7.1.5 of this addendum) is currently installed and can be verified as meeting the requirements for performing their Safety-Significant function.

This page intentionally left blank.

Table 4-1. Preliminary Safety Equipment List.
(Excerpt from Bourger 1993 Table A)

Component	Safety Function	Safety Class	MRP 5.46/EP-1.4 Criterion
Mixer Pumps	Required for sludge mobilization	3	Failure does not satisfy any of the Safety-Class criteria for SC 1 or 2 listed in Table 1 of MRP 5.46 Rev. 4.
Mixer pump power supply	Required for supply of power to mixer pumps	3	Cause significant harm to facility workers due to industrial safety hazards.
Mixer pump instrumentation	Required to monitor pump operation	3	Failure does not satisfy any of the Safety-Class criteria for SC 1 or 2 listed in Table 1 of MRP 5.46 Rev. 4.
Mixer pump water supply	Required for insertion and rotation of pumps during startup	4	Failure has no significant importance to safety, health, or environmental protection.
Mixer pump support system	Required for support of mixer pumps during operation.	2	Failure could prevent a separate Safety-Class 2 system, component, structure, from performing its safety function, either by loss of control function or by damage.
Shielding plugs		3	Failure could preclude implementing ALARA principles for exposure to radiological or nonradiological hazardous materials.
Four profile thermocouples	Required to monitor tank temperatures	3	Failure does not satisfy any of the Safety-Class criteria for SC 1 or 2 listed in Table 1 of MRP 5.46 Rev. 4.
Sludge thermocouples	Required to monitor tank temperatures	3	Failure does not satisfy any of the Safety-Class criteria for SC 1 or 2 listed in Table 1 of MRP 5.46 Rev. 4.

Note: For conversion from SC-2, SC-3, and SC-4 to Safety-Class and Safety-Significant (as defined in DOE STD-3009), refer to Jensen et al. 1997.

This page intentionally left blank.

5.0 DERIVATION OF TECHNICAL SAFETY REQUIREMENTS

The 241-AZ-101 mixer pump test hazards and accidents identified in Chapter 3 are safely mitigated or prevented using currently-approved TSRs (Noorani 1997) in conjunction with Air Lift Circulator TSR controls, converted from Heubach 1996 as identified in Wagoner 1997, thus ensuring protection of the workers and the public.

Table 5-1 on the following page summarizes the preventive or mitigative actions identified for each of the accidents analyzed in Chapter 3 of this addendum, and identifies the applicable TWRS TSR controls or other document which implements the required actions.

The air lift circulator control, discussed in the first paragraph of this section, is specifically converted from the AWF Interim Operational Safety Requirement (IOSR) LCO 3.4.4, Air Lift Circulators and its surveillance requirements to TSR LCO 3.3.4 along with its surveillance requirements. TSR LCO 3.3.4 prevents the tank bump and its subsequent unmitigated, unprevented on-site consequences over the risk evaluation guidelines.

This page intentionally left blank.

Table 5-1. Summary of Preventive/Mitigative Actions.

Accident Scenario	Preventive or Mitigative Actions during mixer pump test	Applicable TSR Contr or Other Document
Unfiltered release of radionuclides and toxic aerosols from the tank (Section 3.4.2.1)	• Limiting the maximum activity on each filter to a level that gives an equivalent dose rate of 200 mrem/h on contact controls the amount of particulates that could be expelled.	TSR AC 5.18
Tank Bump (Section 3.4.2.2)	• Localized high temperatures may be caused by mixer pump operation. The mixer pumps will be turned off if the top 15 feet of waste reaches 90.6 °C (195 °F) or the waste below 15 feet reaches 101.7 °C (215 °F). ALCs will be operated to provide more uniform temperature distributions per limits described below. • Upon loss of the primary ventilation system, the mixer pump(s) will be turned off to control gas and heat buildup in the tank. • During normal operation of the pump(s) and at the end of the test while the pumps are turned off, the waste temperature will be monitored and the air lift circulators operated as soon as the temperature reaches 110 °C (230 °F) for waste below 20 feet and 87.8 °C (190 °F) for the average waste solution.	TSR LCOs 3.3.2, 3.3.4 TSR LCO 3.2.1 TSR LCO 3.3.4
Breach of Containment (Section 3.4.2.3)	• High temperature (3.4.2.3.5): - Primary tank exhaust ventilation system shall be operable. • Flammable gas deflagration (3.4.2.3.1): - Implementation of Ignition Source Controls as well as monitoring for flammable gas are preventive measures against deflagration, breach of the tank, and breach of ventilation confinement in the event that an episodic gas release exceeds 100% of the lower flammability limit. - LCO 3.2.1 requires ventilation operability to prevent flammable gas accumulations. The vent system operation also prevents tank pressurization and an unfiltered release. • Tank dome collapse due to overload (3.4.2.3.6): - This event is deemed beyond extremely unlikely for the mixer pump test based on analysis of dead load, live load, jet impingement, and seismic loads. All components of the support system were found adequate to support the mixer pumps for both normal service and extreme conditions. • Seismic (3.4.2.3.7): - Structural analysis of seismic loads shows that the pump support and riser configuration are acceptable for the applied design requirements.	TSR LCO 3.2.1 TSR AC 5.9, 5.10, 5.1 TSR LCO 3.2.1 TSR AC 5.16 Moody 1996
Criticality (Section 3.4.2.4)	• A Criticality Safety Evaluation Report prepared for Project W-151 identified no scenario associated with the mixer pump test that could credibly lead to criticality.	TSR AC 5.7

AC = Administrative Control
AWF = Aging Waste Facility
LCO = Limiting Condition for Operation
TSR = Technical Safety Requirement (TWRS)

(Section number refers to sections of this addendum.)

This page intentionally left blank.

6.0 PREVENTION OF INADVERTENT CRITICALITY

This section contains information relevant to prevention of inadvertent criticality as a result of the operation of the mixer pump test. For further information on the Tank Waste Remediation Systems (TWRS) specific criticality safety and protection program, see Section 4.3 of the TWRS BIO. The program ensures that sufficient controls are in place to reduce the likelihood of inadvertent nuclear criticality excursions as a result of the activities performed within the TWRS facilities.

6.1 REQUIREMENTS

See Section 4.3 of the TWRS BIO for requirements.

6.2 FACILITY IMPLEMENTATION

See Section 4.3 of the TWRS BIO for facility implementation.

6.3 PROJECT IMPLEMENTATION

Vail 1997 evaluates the safety aspects of the mixer pump test. The Criticality Safety Evaluation Report is necessary to address the potential that mixing, suspension, and settling of tank fissile material may result in a criticality safety concern. See Section 3.4.2.4 of this addendum for further discussion on criticality.

This page intentionally left blank.

7.0 RADIATION PROTECTION

This section identifies the requirements for radiation protection as a result of the operation of the mixer pump test.

7.1 REQUIREMENTS

See Section 4.4 of the TWRS BIO for requirements.

7.2 FACILITY IMPLEMENTATION

See Section 4.4 of the TWRS BIO for facility implementation.

7.3 PROJECT IMPLEMENTATION

Design of the upgrades necessary for the mixer pump test followed the requirements of Westinghouse Hanford Company Controlled Manual WHC-CM-4-9, *Radiological Design*, which has since been canceled by Evans 1994. A review of Nordquist 1997 shows that the uncontrolled area dose rate limit of 0.5 mrem from WHC-CM-4-9 was used for the design. This limit is conservative from the standpoint of the upgrades being in a controlled tank farm facility. The current dose rate limit from Evans 1994 for controlled full-time use is 2.5 μSv (0.25 mrem). The only designs impacted by this change are the radiation shields built for the new equipment (mixer pumps and new thermocouples). Access to the top of the mixer pumps is very difficult due to the motor and installed support equipment. Full-time exposure above the thermocouples is not expected either during the normal operations or potential abnormal operations.

There were no project specific requirements related to radiation protection during construction of the project equipment as all work activities were performed per Section 4.4 of the TWRS BIO.

This page intentionally left blank.

8.0 HAZARDOUS MATERIAL PROTECTION

This section identifies the requirements for hazardous material protection other than radiological hazards for the mixer pump test.

8.1 REQUIREMENTS

See Section 4.5 of the TWRS BIO for requirements.

8.2 FACILITY IMPLEMENTATION

See Section 4.5 of the TWRS BIO for facility implementation.

8.3 PROJECT IMPLEMENTATION

No project-specific requirements related to hazardous material protection were identified for the mixer pump test.

This page intentionally left blank.

9.0 RADIOACTIVE AND HAZARDOUS WASTE MANAGEMENT

This section lists the requirement documents for the radioactive and hazardous waste management for the mixer pump test.

9.1 REQUIREMENTS

See Section 4.6 of the TWRS BIO for requirements.

9.2 FACILITY IMPLEMENTATION

See Section 4.6 of the TWRS BIO for facility implementation.

9.3 PROJECT IMPLEMENTATION

No additional requirements relating to radioactive and hazardous waste management were identified for the mixer pump test. The equipment removed from the tank to accomplish the mixer pump test was managed as mixed waste.

This page intentionally left blank.

10.0 INITIAL TESTING, IN-SERVICE SURVEILLANCE, AND MAINTENANCE

This section identifies the requirements for testing, surveillance, and maintenance for the mixer pump process test equipment.

10.1 REQUIREMENTS

See Section 4.7 of the TWRS BIO for requirements.

10.2 FACILITY IMPLEMENTATION

See Section 4.7 of the TWRS BIO for facility implementation.

10.3 PROJECT IMPLEMENTATION

10.3.1 Initial Testing

USQD TF-96-1041 verified that the checkout testing of the installed equipment was within the current TWRS Authorization Basis.

10.3.2 In-Service Surveillance

New in-service surveillance procedures were not required as a result of the mixer pump test equipment. All new surveillances will only be required during the operation of the mixer pump test and will be documented in the test plan.

10.3.3 Maintenance

New preventive maintenance procedures were not required as all of the new equipment are covered by existing maintenance procedures. Specific maintenance items such as periodicity and types of lubricants were itemized by the various vendors and input into the existing maintenance program as identified in Section 4.7 of the TWRS BIO.

This page intentionally left blank.

11.0 OPERATIONAL SAFETY

This section identifies requirements for conduct of operations, Aging Waste Facility (AWF) fire protection, and the implementing program documents directly resulting from the performance of the mixer pump test.

11.1 REQUIREMENTS

See Sections 4.8, 4.9, and 4.10 of the TWRS BIO for requirements.

11.2 FACILITY IMPLEMENTATION

See Sections 4.8, 4.9, and 4.10 of the TWRS BIO for facility implementation.

11.3 PROJECT IMPLEMENTATION

No project-specific requirements related to operational safety or fire protection were identified for the mixer pump test. Per the requirements of DOE 5480.7, no project-specific fire hazards analysis was required. Motors overheating are already potential fire hazards for Tank Farms. These motors do not represent anything new. The motors are in the open where the damage would be limited only to the motors. The mixer pump operations have been evaluated by the Flammable Gas Equipment Advisory Board (Smet 1997).

This page intentionally left blank.

12.0 PROCEDURES AND TRAINING

This section lists the requirements for the procedures and training programs for the mixer pump test.

12.1 REQUIREMENTS

See Section 4.11 of the TWRS BIO for requirements.

12.2 FACILITY IMPLEMENTATION

See Section 4.11 of the TWRS BIO for facility implementation.

12.3 PROJECT IMPLEMENTATION

There are specific training requirements for operation of the mixer pumps including on-the-job training cards, required reading, and additional certifications for the nuclear power operators for operating the new equipment. These requirements are specified in Bohan 1996.

The procedure to perform the mixer pump test is TF-210-OTP-001 (Ross 1997).

This page intentionally left blank.

13.0 HUMAN FACTORS

This section lists the requirements for a human factors program to demonstrate that human factors are considered in facility design where human actions are relied upon for preventive or mitigative actions.

13.1 REQUIREMENTS

See Section 4.18 of the TWRS BIO for requirements.

13.2 FACILITY IMPLEMENTATION

See Section 4.18 of the TWRS BIO for facility implementation.

13.3 PROJECT IMPLEMENTATION

The application of human factors is graded on project risk, complexity, and level of involvement of the operator at the facility. A human factors systematic inquiry was not required for the mixer pump test. Within TWRS, human factors are considered in the development of procedures and controls, staffing, interface with Safety systems, structures and components, surveillance, maintenance, and Safety Analyses. For the mixer pump test, various human factors were used including development of a written mixer pump test procedure, validation of the procedure, qualification and training of the nuclear power operators, and design of the test monitoring console with design improvement feedback from the operators. Since this is a one-time test, no comparisons were made regarding allocation of mixer pump control functions between the operators versus automatic devices.

This page intentionally left blank.

14.0 QUALITY ASSURANCE

This section lists the requirements for a quality assurance program to ensure the safety of personnel and the public, for environmental protection, and for the implementing program documents.

14.1 REQUIREMENTS

See Section 4.12 of the TWRS BIO for requirements.

14.2 FACILITY IMPLEMENTATION

See Section 4.12 of the TWRS BIO for facility implementation.

14.3 PROJECT IMPLEMENTATION

Implementation of specific quality assurance requirements for the mixer pump process test equipment was controlled by Manthei 1994.

The Quality Assurance Program consists of the following:

- Personnel performing construction on this project were trained and qualified in accordance with the above quality assurance program plan and DOE 5480.20A.
- Quality Improvement processes described in the quality assurance programs provided for the detection and correction of quality problems throughout the design and construction of this project.
- Documents associated with this project have been independently reviewed for completeness and accuracy. A record index is available to classify all quality assurance records to aid in document retrieval.
- Work processes associated with this project have been and will be strictly adhered to in accordance with this quality assurance program plan. Appropriate administrative procedures have been developed and approved to control key aspects in the design and construction of this project.
- Designs associated with this project were independently reviewed and approved. Completed construction is accurately depicted by as-built drawings.

- Procurement of safety-class and safety-significant items for this project were in compliance with this quality assurance program in that such items have been purchased from qualified suppliers where applicable and all stated requirements have been met as verified through independent inspections, tests, and assessments. All required Certified Vendor Information has been received and appropriately indexed and filed to support continuity of service.

- Inspection and testing of items associated with this project met required standards as verified by properly trained and qualified personnel. Records are on file to attest to accuracy and completeness of the inspection and testing.

- Periodic management assessment of this project was established to ensure this project is compliant with this quality assurance program plan and the objectives stated within met required performance objectives.

- Independent assessments were planned, scheduled, and conducted to confirm that project deliverables and service quality are adequate to meet operational objectives.

15.0 EMERGENCY PREPAREDNESS PROGRAM

This section identifies the requirements for the emergency preparedness functions and response at the site of the mixer pump test.

15.1 REQUIREMENTS

See Section 4.13 of the TWRS BIO for requirements.

15.2 FACILITY IMPLEMENTATION

See Section 4.13 of the TWRS BIO for facility implementation.

15.3 PROJECT IMPLEMENTATION

No project-specific requirements related to emergency preparedness were identified for the mixer pump test.

This page intentionally left blank.

16.0 PROVISIONS FOR DECONTAMINATION AND DECOMMISSIONING

This section describes provisions that facilitate future decontamination and decommissioning (D&D) of the facilities.

16.1 REQUIREMENTS

See Section 4.14 of the TWRS BIO for requirements.

16.2 FACILITY IMPLEMENTATION

See Section 4.14 of the TWRS BIO for implementation.

16.3 PROJECT IMPLEMENTATION

This document does not evaluate removal of the mixer pumps and future D&D. D&D considerations were left to the future D&D of the tank farms as there are other in-tank components which will need similar evaluation. Safety considerations for removal of the pumps will be addressed by separate safety documentation once that portion of the mission is defined. At this time removal of the mixer pumps following the mixer pump test is not anticipated. It is expected, following an acceptable test, that the pumps will be used in the future for waste retrieval purposes, supporting the TWRS strategy. If the mixer pumps fail during the test, the test will be concluded.

The design of the installed mixer pumps does include provisions for decontamination and decommissioning, such as a spray ring in the extended riser, capability for installing a flexible receiver to provide tank confinement during mixer pump removal, minimizing cracks and crevices, and using stainless steel for material contacted by tank waste for ease in decontamination.

This page intentionally left blank.

17.0 MANAGEMENT, ORGANIZATION, AND INSTITUTIONAL SAFETY PROVISIONS

This section provides the requirements specific to this chapter and pertinent to the safety analysis and for the implementing program documents.

17.1 REQUIREMENTS

See Section 4.1 of the TWRS BIO for requirements.

17.2 FACILITY IMPLEMENTATION

See Section 4.1 of the TWRS BIO for facility implementation.

17.3 PROJECT IMPLEMENTATION

No project-specific requirements related to management, organization, and institutional safety provisions were identified for the mixer pump test.

This section specifically refers to the TWRS BIO: Section 4.2 regarding Standards/Requirements Identification Document, Section 4.15 regarding Configuration Management and Control, Section 4.16 regarding Occurrence Reporting, and Section 4.17 regarding Unreviewed Safety Questions.

This page intentionally left blank.

18.0 REFERENCES

18.1 DOCUMENTS

Bendixsen 1990, *History of Tank Bumps in Aging Waste Tank Farms* WHC-SD-WM-TA-021, Rev. 0, Westinghouse Hanford Company.

Board 1996, *Tank Bump Consequence Analysis*, WHC-SD-WM-CN-043, 1996, Rev. 2, Westinghouse Hanford Company, Richland, Washington.

Bohan 1996, *Training and Staffing Plan for Performance of Tank 241-AZ-101 Mixer Pump process Test (Project W-151)* Internal Memo 77130-96-014, Westinghouse Hanford Company, Richland, Washington.

Bourger 1993, *Tank 241-AZ-101 Waste Retrieval System Preliminary Safety Analysis for Project W-151*, WHC-SD-W151-PSAR-001, Westinghouse Hanford Company, Richland, Washington.

Braun et al. 1994, *High Level Waste Tank Subcriticality Safety Assessment*, WHC-SD-WM-SARR-003, Westinghouse Hanford Company, Richland, Washington.

Collins 1992, *Project W-030 Tank Farm Ventilation Upgrade, Heat Exchanger Performance Calculation*, CN W-030-010, Rev. 0, Kaiser Engineers Hanford, Richland, Washington.

Conrads 1996, *Seismic Design Guide for Safety Class 3 and 4 Equipment at the Hanford Site*, WHC-SD-GN-DGS-30006, Rev. 1A, Westinghouse Hanford Company, Richland, Washington.

Cowley 1996, *Development of Radiological Concentrations and Unit Liter Doses for TWRS FSAR Radiological Consequence Calculations*, WHC-SD-WM-SARR-037, Rev. 0, Westinghouse Hanford Company, Richland, Washington.

Crass 1993, *Specification for Waste Mobilization Mixer Pump Project W-151 Tank AZ-101 Waste Retrieval System*, WHC-S-0040, Rev. 1, Westinghouse Hanford Company, Richland, Washington.

Crass 1996, *Steam Coil Fatigue Analysis*, WHC-SD-W151-DA-006, Rev. 0, Lockheed Martin Hanford Company, Richland, Washington.

DOE-EIS-0113, 1987, *Final Environmental Impact Statement: Disposal of Hanford Defense High-Level, Transuranic, and Tank Wastes, Hanford Site, Richland, Washington*, 5 vols., U.S. Department of Energy, Washington, D.C.

DOE-EIS-0189, 1996, *Final Environmental Impact Statement for the Tank Waste Remediation System*, Vol. 1, U.S. Department of Energy, Washington, D.C.

Evans 1994, *Radiological Design Guide*, WHC-SD-GN-DGS-30011, Rev. 0, Westinghouse Hanford Company, Richland Washington.

Fineman and Lawler 1982, *Modeling of Air-lift Circulators*, SD-WM-TI-046, Rev. 0, Rockwell Hanford Operations, Richland, Washington.

Fineman 1984, *Aging Waste Tank Air-Lift Circulator Reports*, SD-WM-TI-140, Rev. 0, Rockwell Hanford Operations, Richland, Washington.

Gerton 1990, *National Environmental Policy Act (NEPA) Memorandum-To-File (MTF) for Project W-E14, 241-AZ-101 Retrieval System Process Test*, 90-VPB-021, U.S. Department of Energy, Richland, Washington.

Gray et al. 1993, *Characterization of the Second Core Sample of Neutralized Current Acid Waste From Double-Shell Tank 101-AZ*, Pacific Northwest Laboratory, Richland, Washington.

Heubach 1996, *Aging Waste Tank Interim Operational Safety Requirements*, WHC-SD-WM-OSR-004, Rev. 1E, Westinghouse Hanford Company, Richland, Washington.

Hewitt 1996, *Tank Farm Health and Safety Plan*, WHC-SD-WM-HSP-002, Rev. 2H, Westinghouse Hanford Company, Richland, Washington.

Hodgson 1995, *Tank Characterization Report for Double-Shell Tank 241-AZ-101*, WHC-SD-WM-ER-410, Rev. 0, Westinghouse Hanford Company, Richland, Washington, October 1995.

Hodgson 1996, *Evaluation of Hanford Tank for Trapped Gas*, WHC-SD-WM-ER-526, Westinghouse Hanford Company, Richland, Washington.

HSRCM-1 1997, *Hanford Site Radiological Control Manual*, HSRCM Project, Richland, Washington.

Hu 1997, *Calculations of Hydrogen Release Rate at Steady State for Double-Shell Tanks*, HNF-SD-WM-CN-117, Rev. 0A, Lockheed Martin Hanford Corporation, Richland, Washington.

JCO 1995, *Justification for Continued Operation, Tank Farm Dome Loading*, Letter, John D. Wagoner, RL, to A. L. Trego, WHC, dated January 6, 1995 (TOP:GZM 94-TOP-173).

Jensen et al. 1997, *TWRS Facility Safety Equipment List*, HNF-SD-WM-SEL-040, Rev. 0-A, Lockheed Martin Hanford Corporation, Richland, Washington.

Julyk 1997, *Mixer Pump Jet Static Impingement Loads on Waste Tank Components*, WHC-SD-W151-DA-008, Rev. 0, Lockheed Martin Hanford Corporation/Numatec Hanford Corporation, Richland, Washington.

Kidder 1994, *Aging Waste Facility Interim Safety Equipment List*, WHC-SD-WM-SEL-020, Rev. 2, Westinghouse Hanford Company, Richland, Washington.

Kohlman 1993, *Supplemental Design Requirements Document, 241-AZ-101 Waste Retrieval System*, WHC-SD-W151-SDRD-001, Rev. 0, Westinghouse Hanford Company, Richland, Washington.

Kronvall 1982, *Maximum Heat Generation & Isotopic Activity Within an Aging Waste Tank*, SD-WM-TI-047, Rev. 0, Rockwell Hanford Company, Richland, Washington.

LANL 1996, *A Safety Assessment for Proposed Pump Mixing Operations to Mitigate Episodic Gas Releases in Tank 241-SY-101: Hanford Site*, WHC-SD-WM-SAD-033, Rev. 2A, Los Alamos National Laboratory, Los Alamos, New Mexico.

Ligotke et al. 1994, *Double-Shell Tank Retrieval Technology: Aerosol and Vapor Source Term Produced During Double-Shell Tank Waste Mobilization and Retrieval: Literature Review and Recommendations*, (letter report DSTRTP-CY94-003, February 1994), Pacific Northwest Laboratory, Richland, Washington.

LMHC 1997, *Tank Waste Remediation System Basis for Interim Operations*, HNF-SD-WM-BIO-001, Rev. 0-D, Lockheed Martin Hanford Corporation, Richland, Washington.

Manthei 1994, *Quality Assurance Program Plan for Project W-151, Tank 101-AZ Waste Retrieval System*, WHC-SD-W151-QAPP-001, Rev. 2, Westinghouse Hanford Company, Richland, Washington.

Meacham et al. 1997, *Organic Complexant Topical Report*, HNF-SD-WM-CN-058, Rev. 1, Lockheed Martin Hanford Corporation, Richland, Washington.

Moody 1996, *241-AZ-101 Mixer Pump Support Assembly, Extension Riser and Spray Wash System Structural Analysis*, WHC-SD-W151-DA-005, Rev. 0, Westinghouse Hanford Company, Richland, Washington.

Morris 1996, Unreviewed Safety Question Evaluation, *Mixer Pump Process Test for Waste in 241-AZ, Aging Waste Double-shell Tank (W-151)*, USQ TF-94-0266, Rev. 1, Westinghouse Hanford Company, Richland, Washington.

Napier et al. 1988, *GENII — The Hanford Environmental Radiation Dosimetry Software System*, PNL-6584, Pacific Northwest Laboratory, Richland, Washington.

Noorani 1997, *Tank Waste Remediation System Technical Safety Requirements*, HNF-SD-WM-TSR-006, Rev. 0-E, Duke Engineering & Services Hanford, Richland, Washington.

Nordquist 1996, Vendor Information File Number 22515, Supplement 32, *Mixer Pumps Tank 101-AZ (WST-P-701A, WST-P-702A, Spare) by Lawrence Pumps, Inc.*, Lawrence, Massachusetts.

Nordquist 1997, *Tank 101-AZ Waste Retrieval System*, WHC-SD-W151-FDC-001, Rev. 4, Numatec Hanford Corporation, Richland, Washington.

PNL 1979, Photograph, "Tank 101-AZ Air Lift Circulators Operating," 86616-5-CN, Pacific Northwest Laboratory, Richland, Washington.

Reed 1996a, Unreviewed Safety Question Determination, *Installation of the Mixer Pump into 241-AZ-101*, USQD TF-96-0018, Rev. 2, Lockheed Martin Hanford Company, Richland, Washington.

Reed 1996b, Unreviewed Safety Question Determination, *Install and Operate Ultrasonic Probes in 241-AZ-101*, USQD TF-96-0805, Rev. 0, Lockheed Martin Hanford Company, Richland, Washington.

Rice 1992a, *Project W-030, Tank Farm Ventilation Upgrade, Tank Waste Evaporation Calculation*, CN W-030-001, Rev. 1, Kaiser Engineers Hanford, Richland, Washington.

Rice 1992b, *Project W-030, Tank Farm Ventilation Upgrade, Waste Tank Vapor Conditions Calculation*, CN W-030-013, Rev. 0, Kaiser Engineers Hanford, Richland, Washington.

Rogers 1993, *An Analytical Model For Evaluating Subcritical Limits For Waste in Hanford Site Storage Tanks*, WHC-SD-SQA-CSA-20356, Rev. 0, Westinghouse Hanford Company, Richland, Washington.

Ross 1997, *AZ-101 Mixer Pump Operational Test Procedure*, TF-OTP-210-001, Rev. A-1, Lockheed Martin Hanford Company, Richland, Washington.

Ryan 1996, *Releases from Failed HEPA Filters due to Over-pressurization Event*, WHC-SD-WM-CN-063, Rev. 2, 1996, Westinghouse Hanford Company, Richland, Washington.

Sathyanarayana 1994, *Thermal Hydraulic Safety Analysis of Aging Waste Tank 101-AZ*, WHC-SD-WM-ER-335, Rev. 0, Westinghouse Hanford Company, Richland, Washington.

Sathyanarayana 1997, Letter, 8C453-97-KS-002, *Thermal Analysis in Support of Project W-151 Tank AZ-101 Mixer Pump Test*, May 29, 1997, Numatec Hanford Corporation, Richland, Washington.

SDC 4.1, *Standard Arch-Civil Design Criteria*, Hanford Plant Standards, Rev. 11, Westinghouse Hanford Company, Richland, Washington.

Serne et al. 1996, *Fluid Dynamic Particulate Segregation, Chemical Processes, and Natural Ore Analog Discussions that Relate to the Potential for Criticality in Hanford Tanks*, WHC-SD-WM-TI-757, Rev. 0, Westinghouse Hanford Company, Richland, Washington.

Serrano 1996, Unreviewed Safety Question Determination, *Consolidation of Flammable Gas/Slurry Growth Unreviewed Safety Question Issues*, USQD TF-96-0433, Rev. 1, Westinghouse Hanford Company, Richland, Washington.

Smet 1997, *Flammable Gas Equipment Advisory Board Interpretation/ Recommendation Report FGEAB-97-017 Rev. 2, W-151 Equipment*, Lockheed Martin Hanford Company, Richland, Washington.

Smith and Elmore 1992, *Corrosion Studies of Carbon Steel Under Impinging Jets of Simulated Slurries of Neutralized Current Acid Waste (NCAW) and Neutralized Cladding Removal Waste (NCRW)*, PNL-7816, Pacific Northwest Laboratory, Richland, Washington.

Squires 1987, *Aging Waste Facility Safety Analysis Report*, WHC-SD-HS-SAR-010, Rev. 2, Last Updated by ECN 631307, May, 1996, Westinghouse Hanford Company, Richland, Washington.

Symons and Staehr 1996, *Mixer Pump Test Plan for Double-Shell Tank 241-AZ-101*, WHC-SD-WM-PTP-027, Rev. 2, Westinghouse Hanford Company, Richland, Washington.

Tardiff 1996a, Unreviewed Safety Question Determination, *Installation and Removal of Thermocouples and Thermocouple Trees in 241-AZ-101*, TF-96-0448, Rev. 0, Lockheed Martin Hanford Company, Richland, Washington.

Tardiff 1996b, Unreviewed Safety Question Determination, *Project W-151 Checkout and Testing of Installed Equipment*, TF-96-1041, Rev. 1, Lockheed Martin Hanford Company, Richland, Washington.

Tiffany 1996, Unreviewed Safety Question Determination, *Camera Installation and Operation at 241-AZ-101*, TF-96-0461, Rev. 0, Lockheed Martin Hanford Company, Richland, Washington.

Vail 1997, *CSER 96-014: Criticality Safety Evaluation Report of Project W-151, 241-AZ-101 Retrieval System Process Test*, HNF-SD-W151-CSA-001, Rev. 2, Fluor Daniel Hanford, Richland, Washington.

Van Keuren et al. 1996, *Toxic Chemical Considerations for Tank Farm Release*, WHC-SD-WM-SARR-011, Rev. 2, Westinghouse Hanford Company, Richland, Washington.

Van Keuren 1996, *Tank Waste Compositions and Atmospheric Dispersion Coefficients for use in Safety Analysis Consequence Assessments*, WHC-SD-WM-SARR-016, Rev. 2, Westinghouse Hanford Company, Richland, Washington.

Van Vleet 1996a, *Waste Tank Ventilation System Waste Material Accumulation* WHC-SD-WM-CN-054, Rev. 0, Westinghouse Hanford Company, Richland, Washington.

Van Vleet 1996b, *Flammable Gas Deflagration Consequence Calculations for the Tank Waste Remediation System Basis for Interim Operation*, WHC-SD-WM-CN-055, Rev. 1, Westinghouse Hanford Company, Richland, Washington.

Wagoner 1996, Letter 96-MSD-283, *Contract Number DE-AC06-96RL13200; The U.S. Department of Energy (DOE), Richland Operations Office (RL), Definition and Declaration of Flammable Gas Unreviewed Safety Question (USQ)*, dated November 1, 1996, John D. Wagoner, RL, to H. J. Hatch, Fluor Daniel Hanford.

Wagoner 1997, Letter 97-SCD-024, *Contract Number DE-AC06-96RL13200 - Approval of Tank Waste Remediation System (TWRS) Basis for Interim Operation (BIO) Readiness and Revised Authorization Basis (AB)*, dated September 12, 1997, John D. Wagoner, RL, to H. J. Hatch, Fluor Daniel Hanford.

Waters and Heimberger 1993, *Stress Cycles and Forces on In-Tank Components Resulting from Mixer Pump Operation in DST 101-AZ*, WHC-SD-W151-ER-001, Rev. 0, Westinghouse Hanford Company, Richland, Washington.

WHC 1996a, *AZ-101 Mixer Pump Extension Riser/Wash System Installation*, drawing H-2-79275, Rev. 3, Westinghouse Hanford Company, Richland, Washington.

WHC 1996b, *241-AZ-101 Mixer Pump Installation*, drawing H-2-79252, Rev. 1, Westinghouse Hanford Company, Richland, Washington.

Whyatt et al. 1996, *Potential for Criticality in Hanford Tanks Resulting from Retrieval of Tank Waste*, PNL-11034, Pacific Northwest National Laboratory, Richland, Washington.

Wicks 1997, Project W-151, "Tank 101-AZ Waste Retrieval System", Startup Readiness Assessment Memorandum of Understanding, J. H. Wicks, LMHC, to D. J. Washenfelder, FDH, dated February 18, 1997 (9751380).

Winkler 1995, Tank 241-AZ-101 *Steam Bumping and Settling Process Test Report*, WHC-SD-WM-PTR-012, Rev. 0, Westinghouse Hanford Company, Richland, Washington

Wong and Waters 1994, *Evaluation of AY/AZ Tank Farm Ventilation System During Aging Waste Retrieval Operations*, WHC-SD-WM-TI-386, Rev. 0, Westinghouse Hanford Company, Richland, Washington.

18.2 U.S. DEPARTMENT OF ENERGY ORDERS, STANDARDS, AND HANDBOOKS

DOE 5480.7, *Fire Protection*, U.S. Department of Energy, Washington, D.C.

DOE 5480.22, *Technical Safety Requirements*, U.S. Department of Energy, Washington, D.C.

DOE 5480.23, *Nuclear Safety Analysis Reports*, Change 1, U.S. Department of Energy, Washington, D.C.

DOE 6430.1A, *General Design Criteria*, U.S. Department of Energy, Washington, D.C.

DOE-STD-1027-92, *Hazard Categorization and Accident Analysis Techniques for Compliance with DOE Order 5480.23, Nuclear Safety Analysis Reports*, U.S. Department of Energy, Washington, D.C.

DOE-STD-3009-94, *Preparation Guide for U.S. Department of Energy Nonreactor Nuclear Facility Safety Analysis Reports*, U.S. Department of Energy, Washington, D.C.

18.3 U.S. ENVIRONMENTAL PROTECTION AGENCY

EPA 1988, EPA-5201/1-88-020, 1988, *Federal Guidance Report No. 11*, "Limiting Values of Radionuclide Intake and Air Concentration and Dose Conversion Factors for Inhalation, Submersion, and Ingestion," U.S. Environmental Protection Agency, Office of Radiological Programs, Washington, D.C.

18.4 CONTROLLED MANUALS

WHC-CM-1-3, *Management Requirements and Procedures*, MRP 5.46, "Safety Classifications of Systems, Components, and Structures," Westinghouse Hanford Company, Richland, Washington.

WHC-CM-4-9, *Radiological Design*, Westinghouse Hanford Company, Richland, Washington.

WHC-CM-4-29, *Nuclear Criticality Safety Manual*, Westinghouse Hanford Company, Richland, Washington.

WHC-CM-4-46, *Nonreactor Facility Safety Analysis Manual*, Westinghouse Hanford Company, Richland, Washington.

WHC-CM-6-1, *Standard Engineering Practices*, EP-1.4, "Safety Classification," Westinghouse Hanford Company, Richland, Washington.

18.5 NUCLEAR REGULATORY COMMISSION

NRC 1982, "Atmospheric Dispersion Models for Potential Accident Consequence Assessments at Nuclear Power Plants," *Regulatory Guide 1.145*, U.S. Nuclear Regulatory Commission, Washington, D.C.

This page intentionally left blank.

APPENDIX 3A

HAZARDS AND OPERABILITY STUDY FOR PROJECT W-151

This page intentionally left blank.

1.0 INTRODUCTION

Project W-151 has been established for the purpose of the installation and process testing of two 300 horsepower mixer pumps weighing 12,247 kg (27,000) each in Aging Waste Facility (AWF) Waste Tank 241-AZ-101. The mixer pumps are intended to mix 90% of the sludge with the supernate in the tank. TWRS SAR Engineering will have the primary role in performing the hazards and accident analysis for the Safety Evaluation. The Safety Evaluation is scheduled to be completed in fiscal year 1996.

The first step in performing an accident analysis is to identify and qualitatively assess the facility hazards. The results of the assessment are used to determine which abnormal events could initiate accidents with the potential to expose site personnel or the general public to radioactive or chemical hazards.

A number of systematic techniques for hazards identification are available. The technique chosen for Project W-151 hazards identification was the Hazards and Operability (HazOp) Study. The HazOp methodology is specifically designed for chemical processing and storage areas. It is one of the most exhaustive techniques available because it is designed to examine process deviations in exhaustive detail, and also because it uses a multi-disciplinary team of knowledgeable individuals in a systematic brainstorming effort. The HazOp results are being used as a scoping tool to determine which potential accident sequences must be analyzed in detail in order to demonstrate that the mixer pumps and ancillary equipment in AWF Waste Tank 241-AZ-101 can be safely operated following installation.

This page intentionally left blank.

2.0 SCOPE

The HazOp identifies equipment and facilities shown on configuration drawings and diagrams within the scope of Project W-151 which could contain quantities of hazardous (radiologically hazardous or toxic) materials with a potential to cause significant consequences to the site personnel or the general public. Areas with limited potential to cause consequences outside of the facility boundaries or initiate significant events in other tanks within the tank farms were not included in the scope of the HazOp.

This page intentionally left blank.

3.0 ORGANIZATIONAL RESPONSIBILITIES

The HazOp was performed using personnel from Westinghouse Safety Analysis and Nuclear Engineering, Double-Shell Tanks (DST) Retrieval Construction Projects, and other groups essential to the W-151 Project. Safety Analysis and Nuclear Engineering coordinated the effort by providing methodology, facilitation, recording, and HazOp tables (Attachment 1 of Appendix 3A) and HazOp Report development and editing. DST Retrieval Construction Projects produced the initial draft of the HazOp tables from raw notes. Other groups included and represented in the HazOp effort are TWRS Quality Assurance and TWRS Engineering.

This page intentionally left blank.

4.0 METHODOLOGY

The HazOp documents the effects of deviations from the design intent of the various "process" parameters. Flow diagrams were used to break the system into nodes. Each major piece of equipment involved in the process is a node, and the piping and/or instrument lines connecting the equipment are also nodes. Pertinent process parameters (guide words) such as flow, pressure, level, and temperature are chosen, and a series of questions are asked about each parameter. Each "question" concerns an abnormal condition of the parameter (for example, "no flow"). The HazOp team, based on design knowledge and operational experience, postulates the cause(s) and effects of the abnormal process condition. From this information, a qualitative estimate of the consequences of the abnormal condition is obtained. The estimate is then used as a screening tool to determine the need for further analysis.

The product of the HazOp study is a series of tables (Attachment 1 of Appendix 3A) showing the results. The results are further categorized to include a list of potential abnormal conditions which might cause consequences in the various categories, which is used to prepare a list of accidents to be considered for further analysis.

This page intentionally left blank.

5.0 RESULTS

The summary of results of the HazOp is included in this section.

The results of the HazOp analyses were a number of postulated abnormal events which were ranked with respect to severity and frequency of occurrence. Table 3A-1 of this appendix shows the number of events considered to have potential consequences in each category, for each study node. Note that the number of ranked abnormal events does not have a one-to-one correlation with the node deviations. In some cases, deviations of a parameter associated with one node would cause another deviation of a parameter associated with a second node. (For example, high flow through a line node might cause high level in the destination vessel.) In some cases the cause and consequences of a particular deviation at a node are identical to a deviation at another node. These are cross referenced in the HazOp tables and not generally included in the count as separate ranked abnormal events.

Table 3A-1 of this appendix shows a summary of the consequence severity and probability of occurrence categories for the energy source/hazard potentials shown in the HazOp study tables. Table 3A-2 of this appendix provides a description of the occurrence severity indices and Table 3A-3 of this appendix a description of the indices for frequencies of occurrence. Only those abnormal events having a potential severity consequence of I or II and a probability range $>1.0 \times 10^{-6}$ will be considered for detailed analysis.

The HazOp tables are included in Attachment 1 of this appendix. Abnormal events identified in Table 3A-1 of this appendix as having a frequency $> 1 \times 10^{-6}$/yr and industrial events with risks to hazards commonly accepted in industry are excluded from the events having potential unacceptable safety risk summarized here.

5.1 NODE 1 — INLET TO EXISTING VENTILATION SYSTEM

F3 - S2

1. Potential exposure of onsite individual to airborne radionuclides and toxic substances when filters fail due to tank over-pressure resulting when exhauster fails.

F2 - S1

1. Potential exposure of occupational individual to airborne radionuclides and toxic substances when filters fail due to tank over-pressure resulting when a riser in another tank connected to the AWF ventilation system is opened.

F2 - S1

1. Potential exposure of occupational individual to airborne radionuclides and toxic substances when ventilation ducting fails due to seismic event, high wind, or impact by construction equipment.

F1 - S2

1. Potential exposure of onsite individual to airborne radionuclides and toxic substances when a chemical reaction results in igniting tank head space flammable gases creating pressure that fails filters causing unfiltered release.

F1 - S1

1. Potential exposure of occupational individual to airborne radionuclides and toxic substances when high wind causes reversal of air flow through open riser on tank.

5.2 NODE 2 — INLET TO NEW VENTILATION SYSTEM

F3 - S1

1. Potential exposure of occupational individual to airborne radionuclides and toxic substances when valve in exhaust duct remains closed allowing pressure to build up, exhaust duct valve then opens pressurizing filters causing them to fail, which results in an unfiltered release.

2. Potential exposure of occupational individual to airborne radionuclides and toxic substances when filters fail due to tank over-pressure resulting when exhauster fails.

3. Potential exposure of occupational individual to airborne radionuclides and toxic substances when filters fail due to tank over-pressure resulting when a riser in another tank connected to the AWF ventilation system is opened.

F2 - S2

1. Potential exposure of onsite individual to airborne radionuclides and toxic substances when ignition of tank head space flammable gases and resulting pressure and heat fail filters causing unfiltered release.

F2 - S1

1. Potential exposure of occupational individual to airborne radionuclides and toxic substances when ventilation ducting fails due to seismic event, high wind, or impact by construction equipment.

F1 - S2

1. Potential exposure of onsite individual to airborne radionuclides and toxic substances when a chemical reaction results in igniting tank head space flammable gases and resulting pressure fails filters causing unfiltered release.

F1 - S1

1. Potential exposure of occupational individual to airborne radionuclides and toxic substances when high wind causes reversal of air flow through open riser or collapsed stack on tank.

5.3 NODE 3 — WASTE TANK

F3 - S1

1. Potential exposure of occupational individual to airborne radionuclides and toxic substances when filters fail due to tank over-pressure resulting when exhauster fails.

2. Potential exposure of occupational individual to airborne radionuclides and toxic substances when filters fail due to tank over-pressure resulting when a riser in another tank connected to the AWF ventilation system is opened.

3. Potential exposure of occupational individual to airborne radionuclides and toxic substances when filters fail due to tank over-pressure resulting when a mixer pump is started and mixing action creates a change in the vapor space composition and pressure.

4. Potential exposure of occupational individual to airborne radionuclides and toxic substances when ignition of tank head space flammable gases created by heat input from mixer pump results in pressure and heat that fail filters causing unfiltered release.

F2 - S2

1. Potential exposure of onsite individual to airborne radionuclides and toxic substances when ignition of tank head space flammable gases results in pressure and heat that fail filters causing unfiltered release.

2. Potential exposure of onsite individual to radionuclides and toxic substances when ignition of tank head space flammable gases results in pressure and heat that breach the tank allowing exposure of the soil column to tank contents.

3. Potential exposure of onsite individual to airborne radionuclides and toxic substances and contamination when ignition of tank head space flammable gases result in pressurizing contaminants through piping leading from tank farm pits when subsequent work is performed in the pits.

F2 - S1

1. Potential exposure of occupational individual to airborne radionuclides and toxic substances when filters fail due to tank over-pressure resulting when a mixer pump is started and mixing/chemical action creates a change in the vapor space composition and pressure.

F1 - S2

1. Potential exposure of onsite individual to radionuclides and toxic substances when tank containment is breached and tank contents are leaked to the soil column due to impact by dropped equipment during installation or removal operations.

2. Potential exposure of onsite individual to radionuclides and toxic substances when tank containment is breached and tank contents are leaked to the soil column due to impact by a missile ejected by a mixer pump.

3. Potential exposure of onsite individual to radionuclides and toxic substances when tank containment is breached and tank contents are leaked to the soil column due to erosion by mixer pump action.

4. Potential exposure of onsite individual to airborne radionuclides and toxic substances when filters fail due to tank over-pressure resulting when a mixer pump is started and mixing/chemical action creates a change in the vapor space composition and pressure.

5. Potential exposure of onsite individual to airborne radionuclides and toxic substances when filters fail due to tank over-pressure resulting when a mixer pump is started, rearranging tank material which results in critical mass formation and criticality.

5.4 NODE 4 — OLD EXHAUST VENTILATION SYSTEM

F3 - S2

1. Potential exposure of onsite individual to airborne radionuclides and toxic substances when valve in exhaust duct remains closed, loss of power to exhaust fan or exhaust fan failure allows pressure to build up, then the exhaust duct valve opens pressurizing filters causing them to fail which results in an unfiltered release.

2. Potential exposure of onsite individual to airborne radionuclides and toxic substances when valve in exhaust duct remains closed allowing flammable gases to build up. Ignition of gases creates ventilation system over-pressure causing filters to fail which results in an unfiltered release.

3. Potential exposure of onsite individual to airborne radionuclides and toxic substances when valve in exhaust duct remains closed causing diminished cooling which results in tank heating causing a tank bump. Sudden release of gases creates ventilation system over-pressure causing filters to fail which results in an unfiltered release.

F3 - S1

1. Potential exposure of occupational individual to airborne radionuclides and toxic substances when filters fail due to tank over-pressure resulting when a riser in another tank connected to the AWF ventilation system is opened.

F2 - S2

1. Potential exposure of onsite individual to airborne radionuclides and toxic substances when filters fail due to tank over-pressure resulting when filters plug with particulate.

F1 - S3

1. Potential exposure of offsite individual to airborne radionuclides and toxic substances when ventilation ducting is breached due to high wind/tornado.

F1 - S2

1. Potential exposure of onsite individual to airborne radionuclides and toxic substances when ventilation ducting is breached due to Seismic event.

F1 - S1

1. Potential exposure of occupational individual to airborne radionuclides and toxic substances when filters fail due to tank over-pressure resulting when a riser in another tank connected to the AWF ventilation system is opened.

5.5 NODE 5 — NEW EXHAUST VENTILATION SYSTEM

F3 - S2

1. Potential exposure of onsite individual to airborne radionuclides and toxic substances when valve in exhaust duct remains closed, loss of power to exhaust fan or exhaust fan failure allows pressure to build up, then the exhaust duct valve opens pressurizing filters causing them to fail which results in an unfiltered release.

2. Potential exposure of onsite individual to airborne radionuclides and toxic substances when valve in exhaust duct remains closed allowing flammable gases to build up. Ignition of gases creates ventilation system over- pressure causing filters to fail which results in an unfiltered release.

3. Potential exposure of onsite individual to airborne radionuclides and toxic substances when valve in exhaust duct remains closed causing diminished cooling which results in tank heating causing a tank bump.

Sudden release of gases creates ventilation system over-pressure causing filters to fail which results in an unfiltered release.

F3 - S1

1. Potential exposure of occupational individual to airborne radionuclides and toxic substances when filters fail due to tank over-pressure resulting when fan control allows it to over-speed.

2. Potential exposure of occupational individual to airborne radionuclides and toxic substances when filters fail due to tank over-pressure resulting when a riser in another tank connected to the AWF ventilation system is opened.

F2 - S2

1. Potential exposure of onsite individual to airborne radionuclides and toxic substances when filter fails due to tank over-pressure resulting when filters plug with particulate.

2. Potential exposure of onsite individual to airborne radionuclides and toxic substances when ignition of tank head space flammable gases created by plugged filter results in pressure and heat that fail filters causing unfiltered release.

3. Potential exposure of occupational individual to airborne radionuclides and toxic substances when ventilation ducting fails due to impact by construction equipment.

F1 - S2

1. Potential exposure of onsite individual to airborne radionuclides and toxic substances when ventilation ducting is breached due to seismic event.

2. Potential exposure of onsite individual to airborne radionuclides and toxic substances when gases build in tank due to a filter failure which fails due to particulate restriction, and the loosed filter media plugs the stack. When the force holding the filter media lodged in the stack are overcome by the pressure that has built up in the tank, the media is dislodged and an unfiltered release occurs.

F1 - S1

1. Potential exposure of occupational individual to airborne radionuclides and toxic substances when filters fail due to tank over-pressure resulting when a riser in another tank connected to the AWF ventilation system is opened.

5.6 NODE 6 — MIXING PUMPS

F3 - S1

1. Potential exposure of onsite individual to radionuclides and toxic substances when tank containment is breached and tank contents are leaked to the soil column due to impact by missile ejected by mixer pump.

2. Potential exposure of onsite individual to airborne radionuclides and toxic substances when loss of power to exhaust fan, or exhaust fan failure, allows pressure to build up causing filters to fail which results in an unfiltered release.

5.7 NODE 7 — EQUIPMENT INSTALLATION AND REMOVAL

F3 - S1

1. Potential exposure of onsite individual to direct radiation and/or airborne radionuclides and toxic substances when removing or installing tank equipment.

2. Potential contamination of soil on top of tank resulting from a spill during tank equipment removal.

This page intentionally left blank.

Table 3A5-1. Summary of HazOp Study Consequence Severity and Frequency of Occurrence Indices.

Equipment/system	Severity	Frequency	No. of Events
Inlet to Existing Ventilation System	S2	F3	1
	S1	F3	1
Node 1	S0	F3	4
	S1	F2	1
	S2	F1	1
	S1	F1	2
Inlet to New Ventilation System	S1	F3	4
	S0	F3	7
Node 2	S2	F2	2
	S1	F2	1
	S0	F2	1
	S2	F1	1
	S1	F1	2
Waste Tank	S1	F3	6
	S0	F3	6
Node 3	S2	F2	8
	S1	F2	2
	S0	F2	1
	S2	F1	6
	S0	F1	2
	S3	F0	1
	S1	F0	4
	S0	F0	1
Old Exhaust Ventilation System	S2	F3	6
	S1	F3	1
Node 4	S2	F2	3
Old Exhaust Ventilation System	S3	F1	1
	S2	F1	2
Node 4	S1	F1	2
	S2	F0	1
New Exhaust Ventilation System	S2	F3	5
	S1	F3	3
Node 5	S0	F3	1
	S2	F2	3
	S2	F1	3
	S1	F1	1
Mixing Pumps	S1	F3	3
	S0	F3	6
Node 6	S0	F2	2
	S0	F1	1
Equipment Installation and Removal	S2	F3	4
	S1	F3	6
Node 7	S2	F0	1

Table 3A5-2. Event Severity Index.

Safety-Class category designation	Description
S3	Potential significant radiological dose consequences or chemical exposure to the offsite receptor.
S2	Potential significant radiological dose consequences or chemical exposure to the onsite co-located worker.
S1	Potential industrial injury, radiological dose consequences or chemical exposure to the facility worker.
S0	No effect outside the facility confinement systems and no safety concerns for the facility worker, the onsite worker, or members of the general public.

Table 3A5-3. Event Frequency Index.

Frequency category designation	Numeric definition	Word definition
F3	$> 10^{-2}$/year	Anticipated
F2	$> 10^{-4}$ to $\leq 10^{-2}$/year	Unlikely
F1	$> 10^{-6}$ to $\leq 10^{-4}$/year	Extremely unlikely
F0	$\leq 10^{-6}$/year	Beyond extremely unlikely

6.0 ACCIDENTS

The purpose of the accident analysis is to demonstrate assurance that the design and operations resulting from Project W-151 can be conducted in a manner that will limit risk to the health and safety of the public and employees and protect the environment. The safety analysis provides the analytical bases for the AWF Tank 241-AZ-101 Waste Retrieval System Safety Requirements. First the facility hazards were identified to determine, to the maximum extent practical, the range of potential accidents or process upsets the facility may experience. Categories of potential accidents were extracted from the hazards assessment and representative scenarios will be developed for each category. Next, dose consequences will be calculated for each scenario. The dose consequences will be compared to the risk acceptance criteria described in WHC-CM-4-46.

6.1 ACCIDENT SELECTION

The HazOp estimates were made for the likelihood of occurrence (Frequency) of each accident shown in the HazOp study tables. There are four Frequency Categories. Also shown are four Severity Categories. These categories were used along with common release mechanisms to group or bin accidents with common attributes. Bin or group numbers are shown on the HazOp study tables.

An accident scenario was developed which bounded all accidents assigned to a bin or group. Six groups or bins were identified. Therefore, six bounding (candidate) accident scenarios were developed. The Bounding candidate accidents are identified in the following section.

6.2 BOUNDING ACCIDENTS

Releases of airborne radionuclides and/or toxic materials that have a potential impact on the onsite and/or offsite individual result from ventilation HEPA filter failure, backflow through open tank risers, leakage via failed vent ducting, and installation or removal of tank equipment. Potential exposure of the soil column to tank contents and potential contamination of the ground water could result from a waste tank leak.

The following accidents are specific to Project W-151 and bound all other accidents resulting from hazards shown in the HazOp study tables.

1. Candidate accident that bounds all accidents listed for Bin 1. Radionuclide release resulting from filter failure due to over-pressurization caused by:

    - Vacuum breaker fault
    - Aerosol generation from chemical reaction
    - Ignition of flammable gases in the dome void space

- Increased aerosol generation due to mixer pump action and heat input
- Plugging of filters with particulate or moisture
- Tank Bump (sudden release of aerosol with the tank liquid volume).

2. Candidate accident that bounds all accidents listed for Bin 2. Radionuclide and toxic material release resulting from opening in top of tank due to reversal of flow caused by:
   - Wind (air flow over open riser draws aerosols from tank)
   - Causes for tank pressurization listed in 1 above while riser is open
   - Tank dome overload resulting in tank dome collapse and breach.
3. Candidate Accident that bounds all accidents listed for Bin 3. Radionuclide and toxic material release resulting from breach in ventilation ducting due to reversal of flow caused by:
   - Seismic event during equipment installation and operation
   - High wind during equipment installation and operation
   - Impact by construction equipment or vehicle.
4. Candidate accident that bounds all accidents listed for Bin 4. Breach of containment which allows tank contents to enter the soil column creating a potential for a pathway to the ground water beneath the tank caused by:
   - Excessive draw down
   - Pressure from flammable gas burn
   - Dropped equipment into tank during installation or removal
   - Missile from pump
   - Erosion during mixer pump operation.

5. Candidate accident that bounds all accidents listed for Bin 5. Radiological and toxicological material release resulting form over-pressure due to Criticality caused by rearrangement of material due to:

   - Mixer pump action during operation or
   - Mixer pump action results after mixer pump shutdown.

   Criticality Safety Evaluation Report WHC-SD-W151-CSA-001, "CSER 96-014 Criticality Safety Of Project W-151, 241-AZ-101 Retrieval System Process Test," will evaluate the criticality safety aspects of the process test. The evaluation extends to the testing and operation of the mixer pumps and does not include the transfer of waste from the tank. The report provides justification that a nuclear criticality is extremely unlikely, if not impossible, in this tank.

6. Radiological and toxicological material release resulting from a seismic event.

This page intentionally left blank.

ATTACHMENT 1

HAZOP STUDY TABLES

This page intentionally left blank.

Figure ATT1-1. Project W-151 HazOp Nodes AWF Waste Tank 241-AZ-101 Mixer Pump Process Test.

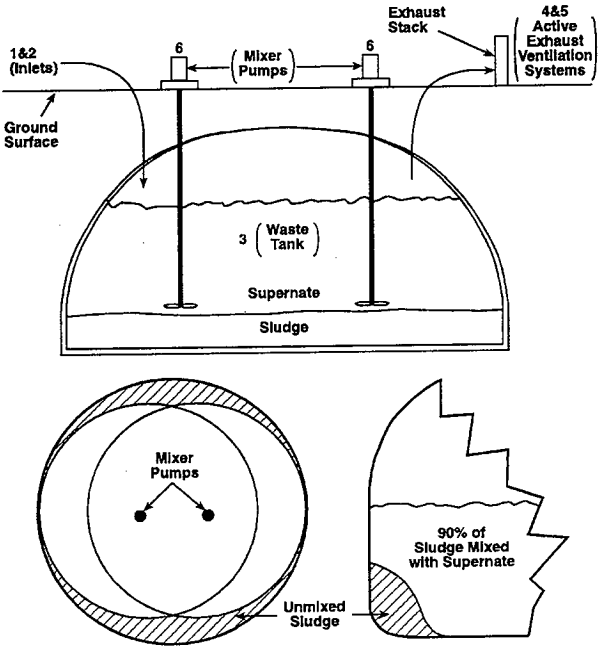

Node Number	Node Description
1	Inlet to Old Ventilation System
2	Inlet to New Ventilation System
3	Waste Tank
4	Old Exhaust Ventilation System
5	New Exhaust Ventilation System
6	Mixing Pumps
7	Equipment Installation and Removal

RG9605104.1
W-151-SD

This page intentionally left blank.

Table ATT1-1. Definition of HazOp Table and Hazard Summary Table Terms.

Term	Definition
Accident	An unplanned event or sequence of events that results in undesirable consequences.
Cause	That which produces the effect or consequence of an accident.
Consequence	Effect created by an accident resulting form a hazard condition: the result or effect of a release of hazardous material (radiological or chemical) usually expressed in terms of dose and exposure.
Defense-in-Depth Controls	Subset of all remaining engineering and administrative features identified in the hazards analysis that are not specified as "credited" in the Hazards Summary Table and which have been agreed as appropriate for inclusion in the safety documentation.
Detection	Engineering or administrative requirements that are either already there or that can be introduced to discover or discern a hazard that may lead to an accident
Guide word	A simple word or phrase used to qualify or quantify the design intention and associated parameters in order to discover design deviations or departures resulting in hazards leading to accidents
Hazard	A source of danger with the potential to cause illness, injury, or death to personnel; or damage to a facility or to the environment.
Mitigating Features	Engineering or administrative requirements that prevent or reduce the consequences resulting from an accident
Node	The point or location on a process diagram at which process parameters are investigated for deviations (or departures from design intent)
Parameter	Aspects of a process that describe it physically or in terms of what is happening
Rank	Accident severity and frequency of occurrence standing
Receptor	The individual affected by an accident
Remark	Comment or observation
Risk Bin Number	Obtained from the RISK MATRIX BIN NUMBERS Table and is a function of Consequence and Frequency.
HazOp Table	A detailed listing of the hazards identified with a qualitative evaluation of the consequences
Hazards Summary Table	A summary record of the information obtained during the hazards analysis process.

Table ATT1-2. Team Members — Hazards and Operability Study Project W-151. (February 13 - 15, 1996)

Team Member	NODE						
	1	2	3	4	5	6	7
DATES:	2/13/96	2/13/96	2/14/96	2/14/96	2/14/96	2/15/96	2/15/96
Henry Aguirre Jr.	X	X	X	X	X	X	X
Richard E. (Rich) Clayton	X	X	X	X	X		
Burton H. (Burt) Gilbert	X	X	X	X	X	X	X
Ronald J. (Ron) Kidder	X	X	X	X	X	X	
Roger M. Nelson	X	X	X	X	X	X	X
Edward M. (Ed) Nordquist	X	X	X	X	X	X	X
Gary R. Tardiff	X	X	X	X	X	X	X

Table ATT1-3. Ranking Criteria Hazards and Operability Study for Project W-151 Qualitative Accident Severity Levels.

Safety Consequence Category Designators	
Category designation	Description
S3	Potential significant radiological dose consequences or chemical exposure to the offsite receptor.
S2	Potential significant radiological dose consequences or chemical exposure to the on-site co-located worker.
S1	Potential industrial injury, radiological dose consequences or chemical exposure to the facility worker.
S0	No effect outside the facility confinement systems and no safety concerns for the facility worker, the onsite worker, or members of the general public.
Environmental Consequence Category Designators	
E3	Environmental discharges of hazardous material outside the Hanford Site Boundary or to the groundwater.
E2	Reportable environmental discharge of hazardous material within the Hanford Site boundary associated with an S2 Safety Consequence.
E1	Limited environmental discharge of hazardous material outside a facility associated with an S1 Safety Consequence.
E0	No environmental impact.

Table ATT1-4. Ranking Criteria Hazards and Operability Study For Project W-151.

Category designation	Numeric definition	Word definition
F3	$> 10^{-2}$ /year	Anticipated
F2	$> 10^{-4}$ to $\leq 10^{-2}$ /year	Unlikely
F1	$> 10^{-6}$ to $\leq 10^{-4}$ /year	Extremely Unlikely
F0	$\leq 10^{-6}$ /year	Beyond Extremely Unlikely

APPENDIX 3B

HAZARDS ANALYSIS SUMMARY

This page intentionally left blank.

Table 3B-1. Hazards Analysis Summary. (6 sheets)

Event category	Postulated event description	Significant causes or energy sources	Receptor	Credited prevention (attributes that lower frequency)	Event frequency		Credited mitigation (attributes that lower consequences)	Consequences		Risk bin number		Defense in depth controls
					Without prevention	With prevention		Without mitigation	With mitigation	Without prevent mitigation	With prevent mitigation	
Event 1 — Radionuclide and toxic release resulting from filter failure												
Internal event caused from within the facility	Release of radionuclides due to filter failure	Ventilation filter failure caused by:	Public	Engineered features: • Backup exhaust train Administrative features: • Tank head space monitoring during mixer pump operation • Controls for opening risers • Controlled startup of mixer pump • Work control procedure • Daily surveillance • Vent system maintenance • Waste compatibility program	F3	F2	Engineered features: • Backup exhaust system • Ventilation system condensers and heater Administrative features: • Ventilation system in operation during mixer pump use • Controlled startup of mixer pump	S2	S1	14	8	
			Co-located worker	Same as for Public			Same as for Public					
		• Vacuum break fault • Chemical reaction • Ignition of flammable gases • Plugged filter • Tank bump	Immediate worker	Same as for Public			Same as for Public					
			Potential for contamination of the environment:									

Table 3B-1. Hazards Analysis Summary. (6 sheets)

Event category	Postulated event description	Significant causes or energy sources	Receptor	Credited prevention (attributes that lower frequency)	Event frequency		Credited mitigation (attributes that lower consequences)	Consequences		Risk bin number		Defense in depth controls
					Without prevention	With prevention		Without mitigation	With mitigation	Without prevent mitigation	With prevent mitigation	
Event 2 — Radionuclide and Toxic aerosol release from tank opening												
Internal event caused from within the facility	Release of radionuclide and toxic aerosols from tank through opening in tank due to reversal of airflow (air is normally drawn into the tank then exhausted via HEPA filters)	• Wind (air) flow over open riser	Public	Engineered features: • HEPA filter differential instruments Administrative features: • Vent system maintenance • Controlled startup of mixer pump • Controls for opening risers • Tank Dome loading controls (equipment and materials) • Ventilation system surveillance • Tank head space monitoring during mixer pump operation	F3	F2	Engineered features: • Ventilation System Administrative features: • Controlled start of mixer pumps	S2	S1	14	8	
		• Chemical reaction resulting in tank pressurization • Vacuum breaker fault • Ignition of flammable gases • Plugged HEPA filters • Tank bump • Tank dome collapse due to overload	Co-located worker	Same as for Public			Same as for Public					
			Immediate worker	Same as for Public			Same as for Public					
			Potential for contamination of the environment:									

Table 3B-1. Hazards Analysis Summary. (6 sheets)

Event category	Postulated event description	Significant causes or energy sources	Receptor	Credited prevention (attributes that lower frequency)	Event frequency		Credited mitigation (attributes that lower consequences)	Consequences		Risk bin number		Defense in depth controls
					Without prevention	With prevention		Without mitigation	With mitigation	Without prevent mitigation	With prevent mitigation	
Event 3 — Radionuclides and Toxic aerosol release from breach in tank ventilation duct												
Internal event caused from within the facility	Radionuclides and toxic aerosols are released through a tank ventilation duct breach	• Seismic event during pump installation	Public	Engineered features: • Ducting designed to withstand designed based earthquake • Ducting designed to withstand high wind Administrative features: • Critical lift procedure for crane • Job controls	F1	F1	Engineered features: • None identified Administrative features: • None identified	S2	S2	9	9	
		• High wind during pump installation	Co-located worker	Same as for Public			Same as for Public					
Natural phenomena, wind, earthquake		• Impact by construction equipment or vehicle	Immediate worker	Same as for Public			Same as for Public					
External event--vehicle impact			Potential for contamination of the environment:									

Table 3B-1. Hazards Analysis Summary. (6 sheets)

Event category	Postulated event description	Significant causes or energy sources	Receptor	Credited prevention (attributes that lower frequency)	Event frequency		Credited mitigation (attributes that lower consequences)	Consequences		Risk bin number		Defense in depth controls
					Without prevention	With prevention		Without mitigation	With mitigation	Without prevent mitigation	With prevent mitigation	
Event 4 — Radionuclides and Toxic material releases from tank												
Internal event caused from within the facility	Radionuclide enter the soil through a breach in the tank containment and enter groundwater	• Excessive draw down of tank level	Public	Engineered features: • Pump strain instruments Administrative features: • Critical lifting procedure • Controlled startup of mixer pump • Operating procedures • Waste Compatibility Program • Preventive maintenance • Surveillances • Pump speed control	F2	F2	Engineered features: • Energy absorption cylinder • Secondary confinement • Screen on pump intake Administrative features: • Controlled startup of mixer pumps	S2	S1	12	B	
		• Pressure resulting from flammable gas burn	Co-located worker	Same as for Public			Same as for Public					
		• Missile from pump	Immediate worker	Same as for Public			Same as for Public					
		• Erosion ring mixer pump operation • Equipment dropped into tank	Potential for contamination of the environment:									

Table 3B-1. Hazards Analysis Summary. (6 sheets)

Event category	Postulated event description	Significant causes or energy sources	Receptor	Credited prevention (attributes that lower frequency)	Event frequency		Credited mitigation (attributes that lower consequences)	Consequences		Risk bin number		Defense in depth controls
					Without prevention	With prevention		Without mitigation	With mitigation	Without prevent mitigation	With prevent mitigation	
Event 5 — Radionuclide and toxic aerosols released from tank												
Internal event caused by within the facility	Radionuclide and toxic aerosols released from tank due to over-pressure	Criticality event	Public	Engineered features: • None identified Administrative features: • Criticality specifications	F1	F1	Engineered features: • None identified Administrative features: • Criticality specifications	S2	S2	9	9	
			Co-located worker	Same as for Public			Same as for Public					
			Immediate worker	Same as for Public			Same as for Public					
			Potential for contamination of the environment:									

Table 3B-1. Hazards Analysis Summary. (6 sheets)

Event category	Postulated event description	Significant causes or energy sources	Receptor	Credited prevention (attributes that lower frequency)	Event frequency		Credited mitigation (attributes that lower consequences)	Consequences		Risk bin number		Defense in depth controls
					Without prevention	With prevention		Without mitigation	With mitigation	Without prevent mitigation	With prevent mitigation	
Event 6 — Radioactive and toxic material release from tank												
Natural phenomena, seismic event	Radioactive and toxic material release to the soil with potential for entrance to the groundwater	Seismic event	Public	Engineered features: • Tank design • Ventilation system design Administrative features: • None identified	F1	F0	Engineered features: • Tank design • Ventilation system design Administrative features: • None identified	S3	S0	13	1	
			Co-located worker	Same as for Public			Same as for Public					
			Immediate worker	Same as for Public			Same as for Public					
			Potential for contamination of the environment:									

Table 3B-1. Hazard and Operability Study - Node 1. (2 sheets)

Project: W-151, Tank 241-AZ-101 Waste Retrieval System Date: 02/13/96					Node: 1		Page: 3A-7
Node Description: Inlet to existing ventilation system. Design Intention: Provide inlet air for tank dome space ventilation system (cooling and confinement of radioactive particulates). In backflow situations, exhaust is unfiltered.							
Parameter/ Guide word	Cause	Consequence	Detection	Mitigating Features	Rank	Bin No.	Remark
Low/No Flow	Over-pressure event in tank (possibly because of a blockage to the exhaust system)	Possible equipment damage and/or loss of valve function (could lead to unfiltered release from breached filter, hydrogen buildup in tank). Unfiltered release, tank heat up.	Dome space pressure instruments and alarms Flow elements in exhaust system	Ventilation system operating while mixer pumps are on or equipment being removed	S0 F3	1	
	Breach of confinement in another location	Depends on breach size (either loss negative pressure or atmospheric release)	Event is probably linked to construction or maintenance activity which will be known (i.e., visual).	Fix the problem (portable exhauster may be needed during construction). Established control for opening risers.	S0 F3	1	
	Exhauster failure	Tank head space pressure causes filters to breach leading to unfiltered release of contaminants to atmosphere.	Flow meters in the exhaust line and dp (differential pressure) instrument and alarms dp across exhaust HEPAs zero	Backup exhaust train	S2 F3	1	
	Icing	High negative pressure in tank if the exhaust fan continues to run Inadequate dome space gas mixing resulting in flammable gas pockets	Dome space pressure instruments and alarms	Work control procedures	S0 F3	1	
	Stack collapsing during wind storm	Same as exhauster failure.	Same as exhauster failure.	Design criteria for stack (wind, seismic, SDC4.1)	S1 F1	1	
	Failure in another tank (i.e., open riser)	Same as breach of confinement (over-pressurization).	Dome space pressure instruments and alarm	Work control and procedures ventilation system operating	S1 F3	1	

Table 3B-1. Hazard and Operability Study - Node 1. (2 sheets)

Project: W-151, Tank 241-AZ-101 Waste Retrieval System Date: 02/13/96					Node: 1		Page: 3A-8
Node Description: Inlet to existing ventilation system. Design Intention: Provide inlet air for tank dome space ventilation system (cooling and confinement of radioactive particulates). In backflow situations, exhaust is unfiltered.							
Parameter/ Guide word	Cause	Consequence	Detection	Mitigating Features	Rank	Bin No.	Remark
High Flow	Vacuum break valve fault (fails open)	Unfiltered inlet	HEPA dp instruments and alarms (low dp on inlet HEPA filter)	Ventilation system operating; may need to increase tank farm ventilation flow rate.	S0 F2	1	Consider additional control for future multiple waste tank mixer pump operation.
	Ducting breach from seismic/high wind/ construction impact	Same as over-pressurization in tank.	Same as over-pressurization in tank.	Work control procedures; ventilation system operating.	S1 F2	1	
Reverse Flow	Wind or tornado	Release of radionuclides and toxic gases through open riser	Dome space pressure instruments and alarms	ventilation system operating Work controls and procedures	S1 F1	1	
More Temperature	Chemical reactions ignite flammable gases Heater faulty	Release of unfiltered radionuclides and toxic gases due to pressure and heat causing filters to fail	Dome space pressure instruments and alarms	Waste compatibility program	S2 F1	1	
Less Temperature	See icing under No Low	Release of radionuclides and toxic gases	Dome space pressure instruments and alarms	Daily surveillances visual	S0 F3	1	

Table 3B-1. Hazard and Operability Study - Node 2. (2 sheets)

Project: W-151, Tank 241-AZ-101 Waste Retrieval System Date: 02/13/96				Node: 2			Page: 3A-9
Node Description: Inlet to new ventilation system.							
Design Intention: Provide inlet air for tank dome space ventilation system (cooling and confinement of radioactive particulates) and provide filtered exhaust in backflow situations (W-030 upgrade).							
Parameter/ Guide word	Cause	Consequence	Detection	Mitigating Features	Rank	Bin No.	Remark
Low/No Flow	Over-pressure event in tank because of a faulty valve to the exhaust system.	Possible equipment damage and/or valve function leads to unfiltered release when valve remains closed allowing pressure buildup, then valve opens allowing pressure to fail filters causing an unfiltered release.	Dome space instruments and alarms Flow Alarm in inlet system	Inlet air filters and Condensers	S1 F3	1	
	Inlet HEPA plugging (water, condensation, debris)	High negative pressure in tank if the exhaust fan continues to run	Visual inspection of filter screens on inlet; HEPA dp indicators and alarms; dome space instruments and alarms	Daily surveillance and maintenance program	S0 F3	1	Differential pressure (dp)
		Inadequate dome space gas mixing resulting in flammable gas pockets	HEPA dp indicators and alarms; dome space pressure instruments and alarms	Daily surveillance and maintenance program	S0 F3	1	
	Breach of confinement in another location	Depends on breach size (either less negative pressure or atmospheric release)	Event is probably linked to construction or maintenance activity which will be known (i.e., visual).	Repair the problem (portable exhauster may be needed during construction). Instituted controls for opening risers.	S0 F3	1	
	Exhauster failure	Over-pressure in the tank causing filter failure and potential atmospheric release	Flow meter in the inlet; pressure dome space instruments and alarms; HEPA dp instruments and alarms	Backup exhaust train; daily surveillance and maintenance program	S1 F3	1	
	Icing due to heater failure	Same as inlet HEPA plugging	visual inspection of filter screens on inlet; dp instruments across inlet HEPAs and alarms	System bypass available (vacuum break); daily surveillance	S0 F3	1	
	Stack collapsing during wind storm	Same as exhauster failure	Same as exhauster failure	Design criteria for stack (wind, seismic, SDC 4.1)	S1 F1	1	
	Damage to inlet due to dropped equipment	Same as icing and HEPA plugging.	Same as icing and HEPA plugging.	Heavy equipment lifting/movement is considered a critical lift and is treated on a case by case basis (NUREG 612); procedures.	S0 F3	3	Only inlet station is above ground.

Table 3B-1. Hazard and Operability Study - Node 2. (2 sheets)

Project: W-151, Tank 241-AZ-101 Waste Retrieval System Date: 02/13/96	Node: 2	Page: 3A-10

Node Description: Inlet to new ventilation system.

Design Intention: Provide inlet air for tank dome space ventilation system (cooling and confinement of radioactive particulates) and provide filtered exhaust in backflow situations (W-030 upgrade).

Parameter/ Guide word	Cause	Consequence	Detection	Mitigating Features	Rank	Bin No.	Remark
Low/No Flow (Continued)	Closed valve in inlet line	Same as inlet HEPA plugging	Same as inlet HEPA plugging.	Daily surveillance and PM	S0 F3	1	preventative maintenance (PM)
	Failure in another tank (i.e., open riser)	Same as breach of confinement and over-pressurizing action.	Same as breach of confinement and over-pressurizing action.	repair problem; work controls; portable exhauster	S1 F3	1	
High Flow	Vacuum break valve fault (fails open)	Unfiltered inlet	HEPA dp instruments and alarms (low dp on inlet HEPA filter)	Ventilation system operating; may need to increase tank farm ventilation flow rate	S0 F2	1	Consider additional control for future multiple waste tank mixer pump operation
	Ducting breach from seismic/high wind/ construction impact	Same as over-pressurization in tank.	Same as over-pressurization in tank	Work control procedures; ventilation system operating	S1 F2	1	
	Inlet HEPA failure	No potential release unless negative tank pressure lost (see reverse flow).	HEPA dp instruments and alarms; dome space pressure instruments and alarms	Maintenance, repair, and daily surveillance	S1 F3	2	
Reverse Flow	Natural draft (wind blowing across inlet with open riser)	Release of radionuclides and toxic gases	Dome space pressure instruments and alarms; inlet flow instruments and alarms	HEPA filters on inlet will filter reverse flow.	S1 F1	2	
	Ignition of flammable gases in the dome space melt inlet HEPAs	Release of unfiltered radionuclides and toxic gases due to heat and pressure which causes filter failure	HEPA dp instruments and alarms; stack flow instruments and alarms	work controls (mixer pump controlled startup)	S2 F2	1	Consider monitoring of gas concentration in tank head space prior to and during mixer pump operation.
More Temperature	Ignition of flammable gases in the dome space melt inlet HEPAs	Release of unfiltered radionuclides and toxic gases due to heat and pressure which causes filter failure	HEPA dp instruments and alarms; stack flow instruments and alarms	work controls (mixer pump controlled startup)	S2 F2	1	Consider monitoring of gas concentration in tank head space prior to and during mixer pump operation.
	Heat from chemical reactions ignite flammable gases. Heater fault ignites flammable gases	Release of radionuclides and toxic gases	HEPA dp instruments and alarms; stack flow instruments and alarms	Waste compatibility program; heater PM; daily surveillance; work controls	S2 F1	1	
Less Temperature	See plugging and icing under "No Flow."	Same as plugging	Visual and dp instruments and alarms	Heater PM and daily surveillance	S0 F3	1	

Table 3B-1. Hazard and Operability Study - Node 3. (5 sheets)

Project: W-151, Tank 241-AZ-101 Waste Retrieval System Date: 02/14/96					Node: 3		Page: 3A-11
Node Description: Waste Tank Design Intention: Encompass tank liquid containment and vapor head space confinement.							
Parameter/ Guide word	**Cause**	**Consequence**	**Detection**	**Mitigating Features**	**Rank**	**BIN NO.**	**Remark**
High Level	Mixer pump seal failure (Bearing water drains to tank faster than normal.)	Increase in tank level	Tank level instruments and alarms	Administrative control on addition of water; daily surveillances; design features (disaster bushings, maximum flow orifice)	S0 F3	See remarks	Not binned because there is no release.
	Loss of spray water control during equipment removal from tank via riser	Increase in tank level	Tank level instruments and alarms	Limited volume (4,500 gal tanker truck)	S0 F3	Same as above.	Same as above.
	Mis-transfer due to mis-routing	Increase in tank level	Tank level instruments and alarms	Operating procedures	S0 F3	Same as above.	Same as Above.
	External flooding	release of tank contents to environment	Visual		S3 F0	Same as above.	External flooding is considered incredible.
	Mixer pump insertion	displacement of tank waste leading to increase in tank level (very small)	Level instruments and alarms	Level will be known prior to pump insertion. Tank surveillance requirements	S0 F3	Same as above.	Mixer pump displacement will be range of 500 gallons.
Low Level	Breach of containment due to equipment drop during installation or removal	Leakage of tank waste to soil column	Tank level instruments and alarms; Primary tank leak detection system (Annulus conductivity probes and continuous air monitor)	Critical lift work procedures and job controls Energy absorption cylinder Secondary containment (Annulus)	S3 F1	4	
	Missile ejection by mixer pump operation punctures primary tank	Leakage of tank waste to annulus	Primary tank leak detection system	Work control (controlled startup); Screened mixer pump intake	S3 F1	4	
	Breach of containment due to tank erosion caused by mixer pump action	Leakage of tank waste to annulus	Primary tank leak detection system	Work control (controlled startup); Screened mixer pump intake			
	Excessive draw down due to inadvertent startup of existing transfer pump	Violation of Low Level Limit (tank structural damage)					

Table 3B-1. Hazard and Operability Study - Node 3. (5 sheets)

Project: W-151, Tank 241-AZ-101 Waste Retrieval System Date: 02/14/96				Node: 3			Page: 3A-12
Node Description: Waste Tank Design Intention: Encompass tank liquid containment and vapor head space confinement.							
Parameter/ Guide word	**Cause**	**Consequence**	**Detection**	**Mitigating Features**	**Rank**	**BIN NO.**	**Remark**
Low Negative Pressure	Energetic explosive events (same as reverse flow and ignition of flammable gas events)	Potential back flow through the inlet station (new) or pits (existing)	Dome space pressure and temperature instruments and alarms	Waste compatibility program Tank head space monitoring during mixer pump operations Work controls	S2 F2	1	
		Backflow of liquid waste to pits resulting in exposure to occupational workers when subsequent work is done in the pits	Pit leak detection instruments and alarms		S2 F2	1	
		Damage to HEPA filters resulting in unfiltered release	HEPA dp instruments and alarms		S2 F2	1	
		Possible impact to tank structure resulting in loss of containment and release to the environment	Dome space pressure instruments and alarms		S2 F2	4	
	Inadequate exhauster operation	Loss of confinement (potential unfiltered release)	Dome space pressure instruments and alarms, HEPA dp instruments and alarms	Proper system balance and maintenance, dp across filter banks, alarms, and shutdown ventilation system Redundant ventilation system	S1 F3	1	Consider backup/standby portable exhauster during operations.
	High volume input (Same as for High Flow in Node 2 vacuum break valve fault.)	Possible wetting of filters if continued long enough	Same as for High Flow in Node 2.	Control of transfer rate; HEPA dp would be an indication of success. Same as for High Flow in Node 2.	S0 F2	1	
	Events at tank or other tanks (opening risers)	Same as inadequate exhauster operation.	Same as inadequate exhauster operation.	Same as inadequate exhauster operation.	S1 F3	1	
	Excess gas release from mixer pump operation	Potential for greater concentrations of toxic substances, flammable gases and radionuclide particles resulting in over-pressure that fails filter causing an unfiltered release.	Stack monitoring instruments and alarms	Controlled startup of mixer pumps	S1 F2	1	
	Mixer pump causes unexpected chemical reaction	Same as for "chemical reactions ignite flammable gases" in Node 2.	Same as for "chemical reactions ignite flammable gases" in Node 2.	Same as for "chemical reactions ignite flammable gases in Node 2.	S2 F1	1	
High Negative Pressure	Same as Node 1 No/Low Flow tank over-pressure event.	Same as Node 1 No/Low Flow tank over-pressure event.	Same as Node 1 No/Low Flow tank over-pressure event.		S0 F3	1	

Table 3B-1. Hazard and Operability Study - Node 3. (5 sheets)

Project: W-151, Tank 241-AZ-101 Waste Retrieval System Date: 02/14/96				Node: 3			Page: 3A-13
Node Description: Waste Tank Design Intention: Encompass tank liquid containment and vapor head space confinement.							
Parameter/ Guide word	**Cause**	**Consequence**	**Detection**	**Mitigating Features**	**Rank**	**BIN NO.**	**Remark**
Vapor Space Composition Change	Mixer pump operation	Increased aerosol loading from heat or splashing results in over-pressurizing filters and an unfiltered release.	HEPA filter dp; monitoring of dome space activity	Controlled startup of mixer pumps	S1 F2	1	
		Potential higher activity in tank dome space	HEPA filter dp and stack monitor instruments and alarms Monitoring of ventilation exhaust during mixer pump operation Portable humidity monitor available	Controlled startup of mixer pumps	S1 F3	1	
		Potential higher concentration of flammable/toxic gases and heat resulting in over-pressure causing filter failure and an unfiltered release	Gas samplers and activity monitors in the exhaust stack Monitoring of dome space concentrations during mixer pump operation	Controlled startup of mixer pumps; operation of ventilation system	S1 F3	1	
	Increase in vapor space as tank level is drawn down.	Stratification of the vapor resulting in a possible buildup of gas concentration due to decreased air sweep ability	Tank level indication	Consider increased ventilation system flow if conditions warrant it.	S0 F1	1	Assumed gas concentration as below 25% of LFL (dropped from OSD-0030 Appendix B).
More Temperature	Tank material rollover	Potential higher concentration of flammable/toxic gases; increased release of toxic gases via the exhaust system	Gas samplers and stack monitor instruments and alarms; vapor space flammable gas monitoring; dome space pressure instruments and alarms	Operation of ventilation system; controlled startup of mixers	S1 F0	1	With the current material composition in this tank rollover is not considered credible. This tank is not on watch list.
		Increased aerosol loading	Gas samplers and activity monitors in the exhaust stack; vapor space flammable gas monitoring; dome space pressure instruments and alarms	Operations of ventilation system; controlled startup of mixers	S1 F0	1	

Table 3B-1. Hazard and Operability Study - Node 3. (5 sheets)

Project: W-151, Tank 241-AZ-101 Waste Retrieval System Date: 02/14/96 | Node: 3 | Page: 3A-14

Node Description: Waste Tank

Design Intention: Encompass tank liquid containment and vapor head space confinement.

Parameter/ Guide word	Cause	Consequence	Detection	Mitigating Features	Rank	BIN NO.	Remark
More Temperature (Continued)	Tank material rollover (Continued)	Higher activity in dome space Gas samplers and activity monitors in the exhaust stack; vapor space flammable gas monitoring; dome space pressure instruments and alarms; operations of ventilation system; controlled startup of mixers S1 F01; excessive HEPA filter loading/airborne material/high activity from dome space failure of HEPA leading to unfiltered release					
			HEPA dp instruments and alarms; stack flow instrument and alarms	HEPA filter performance monitoring; standby exhaust system	S1 F0	1	
	Explosion event	Release of unfiltered radionuclides and toxic gases due to heat and pressure which causes filter failure	HEPA dp instruments and alarms; stack flow instruments and alarms	work controls (mixer pump controlled startup)	S2 F2	1	
	Fire event (deflagration)	See Node 1 More Temperature.			S2 F2	1	
	Increased temperature of the waste due to mixer pump heat input	See tank material rollover.			S1 F3	1	
	Extended low air flow in tank head space	Refer to exhaust/ inlet nodes (Node 4 Low Flow and Node 3 Low Negative Pressure).			SO F3	1	
	Loss of cooling/heat exchanger failure	See Nodes 4 and 5 Less Temperature.				1	
	Chemical reaction	Over-pressurization potential for fire and explosion	Dome space pressure instruments and alarms	Waste compatibility program	S2 F1	1	
		Over temperature of the tank structure (primary and concrete) resulting in tank breach and possible release to soil.	Thermocouples in waste and in tank wall, floor, exhaust stream	Work controls, controlled startup of mixer pumps; waste compatibility program	S2 F2	4	
	Redistribution of layers at the start of mixing	Potential release of flammable and toxic gases and radionuclides and steam causing filter failure and unfiltered release	Dome space pressure instruments and alarms Temp thermocouple indications; gas monitoring	Controlled startups; gas monitoring during mixer pump operation	S1 F3	1	

Table 3B-1. Hazard and Operability Study - Node 3. (5 sheets)

Project: W-151, Tank 241-AZ-101 Waste Retrieval System Date: 02/14/96				Node: 3		Page: 3A-15
Node Description: Waste Tank Design Intention: Encompass tank liquid containment and vapor head space confinement.						
Parameter/ Guide word	**Cause**	**Consequence**	**Detection**	**Mitigating Features**	**Rank**	**BIN NO.**	**Remark**
Composition Change	What if one pump fails during operation?	Would not meet 90% criteria; insufficient mobilization of tank waste	Pump instruments thermocouples, gamma probes	Stop operations (option; install another pump).	S0 F3	See remarks	Not binned because there is no release.
More Viscosity	Excess evaporation	May not be able to mix due to increased viscosity	Increased load on pump will be noted if viscosity increases. Tank level instruments and alarms; Tank level surveillance	Water addition (e.g., condensate recycle)	S0 F1	SAME AS ABOVE.	Significant tank level decreases due to evaporation take three months. Not binned because there is no release.
Criticality	Rearrangement of material due to mixer pump action (and/or subsequent mixer shut down)	Release of steam and gases, aerosols, increased temp., high activity	Tank temperature and dome space pressure instruments and alarms; ventilation system instruments and alarms	Criticality specifications;	S2 F1	5	Critical Safety Report WHC-SD-W151-CSA-001, "CSER 96-014 Criticality Safety of Project W-151, 241-AZ-101 Retrieval, System Process Test," will evaluate the criticality safety aspects of the process test. The evaluation extends to the testing and operation of the mixer pumps only and does not include the transfer of waste from the tank. The report provides justification that a nuclear criticality is extremely unlikely, if not impossible, in this tank.
More Dome Loading	Increased load from newly installed equipment; unauthorized heavy equipment; dropped load; ash, snow and soil loading	Dome collapse; loss of confinement	Visual survey; dome space pressure instruments; stack flow instruments and alarms	Administrative controls (dome load control document)	S2 F2	4	

Table 3B-1. Hazard and Operability Study - Node 4. (3 sheets)

Project: W-151, Tank 241-AZ-101 Waste Retrieval System Date: 02/14/96 Node: 4 Page: 3A-16

Node Description: Old exhaust ventilation system.

Design Intention: Provide a flow path for the ventilation of the tank and flow of contaminated air to the filters.

Parameter/ Guide word	Cause	Consequence	Detection	Mitigating Features	Rank	Bin No.	Remark
No/Low Flow	Blocked valve or damper	Flammable gas buildup in vapor space. Potential for flammable gas burn causing over pressurization of filters leading to unfiltered release. Potential for pressure release failing filters when valve opened resulting to an unfiltered release	Stack flow instruments and alarms	Administrative control of valve lineup/system balancing	S2 F3	1	
			damper position indication	Standby exhaust system; work controls (ventilation system operating during mixer pump operation)	S2 F3	1	
		Diminished cooling in tank leading to potential tank bump which causes over pressurization of filters leading to an unfiltered release.	Exhaust system instruments and alarms	Standby exhaust system; work controls (ventilation system operating during mixer pump EYEPIECE)	S2 F3	1	
		Decreased negative pressure in dome (i.e., loss of in leakage) leading to unfiltered unmonitored release of aerosols or particulate	Dome space pressure instruments and alarms	Standby exhaust system; work controls (ventilation system operating during mixer pump EYEPIECE)	S2 F3	1	
	Loss of power	Same as for blocked valve.	Same as for blocked valve.	PM (Preventive Maintenance); standby power	S2 F3	1	Preventative Maintenance (PM)
	Seismic event	Same as for blocked valve.	Same as for blocked valve.	Design features	S2 F1	1	
	Fan failure	Same as blocked valve.	Same as for blocked valve.	PM; daily surveillances	S2 F3	1	
No/Low Flow (Continued)	Stack blockage	Flammable gases build up and ignite in tank. The burn results in pressure build up which cannot vent due to plugged stack. The tank breaches due to over-pressure releasing contents to soil column. Potential for pressure to dislodge plug. Radionuclides and toxic substances released to atmosphere. Pressurized condition could occur even without flammable gas burn.	Same as for blocked valve	PM; daily surveillances	S3 F1	4	Blockage envisioned to occur from a burst HEPA filter

Table 3B-1. Hazard and Operability Study - Node 4. (3 sheets)

Project: W-151, Tank 241-AZ-101 Waste Retrieval System	Date: 02/14/96	Node: 4		Page: 3A-17

Node Description: Old exhaust ventilation system.

Design Intention: Provide a flow path for the ventilation of the tank and flow of contaminated air to the filters.

Parameter/ Guide word	Cause	Consequence	Detection	Mitigating Features	Rank	Bin No.	Remark
	Exhaust HEPA plugged by aerosols during mixing	HEPA filter failure due to high dp leading to unfiltered release of accumulated material	Flow indication on exhaust stack; HEPA filter dp instrumentation; dome space pressure instruments and alarms	HEPA monitoring and testing; backup HEPA filters in parallel train; standby exhaust system	S2 F2	1	
		Unacceptable concentrations of flammable gases in the dome space due to inadequate air removal	Same as HEPA failure flammable gas monitoring.	Same as HEPA failure.	S2 F2	1	
More Flow	Ductwork breach from external phenomena (seismic event, vehicle impact, tornado)	Unfiltered unmonitored release to the environment	Visual; exhaust stack flow instruments and alarms	Administrative controls; design of exhaust duct to withstand seismic event; low frequency of other events	S2 F1 Seismic S2 F1 Vehicle S2 F0 Tornado	3 3 3	

Table 3B-1. Hazard and Operability Study - Node 4. (3 sheets)

Project: W-151, Tank 241-AZ-101 Waste Retrieval System	Date: 02/14/96	Node: 4		Page: 3A-18

Node Description: Old exhaust ventilation system.

Design Intention: Provide a flow path for the ventilation of the tank and flow of contaminated air to the filters.

Parameter/ Guide word	Cause	Consequence	Detection	Mitigating Features	Rank	Bin No.	Remark
More Flow (Continued)	Open riser	Same as Node 3 Low Negative Pressure.	Same as Node 3 Low Negative Pressure.		S2 F3	1	
Reverse Flow	Pressurization in interconnected tank that temporarily exceeds the exhaust system negative pressure	Same as Low/No Flow.	dome space pressure instruments and alarms	Work controls	S2 F1	1	
		mixing of gas streams forming undesirable products	dome space pressure instruments and alarms	Work controls	S2 F1	1	
More Temperature	See Node 3 More Temperature.						
Less Temperature	Not an issue for this node.						
More Moisture	See Node 3 Vapor Space Composition Change.						

Table 3B-1. Hazard and Operability Study - Node 5. (3 sheets)

Project: W-151, Tank 241-AZ-101 Waste Retrieval System Date: 02/14/96				Node: 5			Page: 3A-19
Node Description: New exhaust ventilation system Design Intention: Provide a flow path for the ventilation of the tank and flow of contaminated air to the filters.							
Parameter/ Guide word	**Cause**	**Consequence**	**Detection**	**Mitigating Features**	**Rank**	**Bin No.**	**Remark**
No/Low Flow	Blocked valve or damper	Flammable or toxic gas buildup in vapor space. Potential for flammable gas burn if ignited causing over pressurization of filter and failure leading to an unfiltered release.	Flow instruments and alarms; damper position indication	Procedural control of valve and system; redundant exhaust system	S2 F3	1	
		Diminished cooling in tank leading to potential tank bump (steam release) which causes over pressurization of filters and failure leading to an unfiltered release.	Exhaust system instruments and alarms	Procedural control of valve and system; redundant exhaust system	S2 F3	1	
		Decreased negative pressure in dome leading to unfiltered unmonitored release of aerosols or particulate	Dome space pressure instruments and alarms	Procedural control of valve and system; redundant exhaust system	S2 F3	1	
	Loss of power	Same as for blocked valve.	Same as for blocked valve.	PM (Preventive Maintenance); back-up power	S2 F3	1	Preventative maintenance (PM)
	Seismic event	Same as for blocked valve.	Same as for blocked valve.	Design features	S2 F1	1	
	Fan failure	Same as for blocked valve.	Same as for blocked valve.	PM	S2 F3	1	
	Stack blockage	Same as for blocked valve.	Same as for blocked valve.	PM, daily surveillances	S2 F1	1	Blockage envisioned to occur from burst HEPA filter.

Table 3B-1. Hazard and Operability Study - Node 5. (3 sheets)

Project: W-151, Tank 241-AZ-101 Waste Retrieval System Date: 02/14/96	Node: 5	Page: 3A-20
Node Description: New exhaust ventilation system Design Intention: Provide a flow path for the ventilation of the tank and flow of contaminated air to the filters.		

Parameter/ Guide word	Cause	Consequence	Detection	Mitigating Features	Rank	Bin No.	Remark
No/Low Flow (Continued)	Exhaust HEPA plugged by aerosols during mixing	HEPA filter failure due to high dp leading to unfiltered release of accumulated material	Stack flow instruments and alarms; HEPA filter dp instruments and alarms; dome pressure instruments and alarms	HEPA Monitoring and testing; backup HEPA filters in parallel train	S2 F2	1	
		Concentrations of flammable gases in the dome space exceed limit due to inadequate air removal. Ignition results in pressurization which causes filter failure and an unfiltered release.	Same as HEPA failure; flammable gas monitoring during mixer pump.	Same as HEPA failure; plus standby exhaust system; controlled start of mixer pumps.	S2 F2	1	
More Flow	Improperly balanced system	Increased negative pressure; breach HEPAs and lead to unfiltered release	Flow instruments and alarms	Control system/monitoring Redundant exhaust system	S0 F3	1	
	Overspeed on fan	Breach HEPAs and lead to unfiltered release	dp on HEPAs, stack monitoring, instruments and alarms	Redundant fan; preventive maintenance; operating procedures	S1 F3	1	
	Ductwork breach from external phenomena (seismic event, excavation)	Unfiltered, unmonitored release (tank pressurization)	Visual; stack flow instruments and alarms	Operational controls; design of exhaust duct to withstand seismic event	S2 F1 seismic S2 F2 excavation.	1 1	(breach between tanks and HEPAs)

Table 3B-1. Hazard and Operability Study - Node 5. (3 sheets)

Project: W-151, Tank 241-AZ-101 Waste Retrieval System Date: 02/14/96							Node: 5	Page: 3A-21
Node Description: New exhaust ventilation system Design Intention: Provide a flow path for the ventilation of the tank and flow of contaminated air to the filters.								
Parameter/ Guide word	Cause	Consequence	Detection	Mitigating Features	Rank	Bin No.	Remark	
More Flow (Continued)	Open risers (harder for system to maintain negative pressure)	Same as for Node 3 Low Negative Pressure.	Same as Node 3 Low Negative Pressure.	Work controls	S1 F3	2		
Reverse Flow	Pressurization in interconnected tank that temporarily exceeds the exhaust system negative pressure	Same as for No/Low Flow, breach HEPAs.	Dome space pressure instruments and alarms in tank dome and in interconnected tank	Controlled startup of mixer pump	S1 F1	1	Consider backflow preventer in tank farm ventilation system.	
More Temperature	See Node 3.							
Less Temperature	Heater shut down	Excessive moisture buildup in filters resulting in failure and potential unfiltered release	HEPA dp instruments and alarms across filters; flow instruments and alarms	Redundant exhaust trains	S1 F3	1		
More Moisture	Same as above. Also, see Node 3 Vapor Space Composition Change					1		

Table 3B-1. Hazard and Operability Study - Node 6. (2 sheets)

Project: W-151, Tank 241-AZ-101 Waste Retrieval System Date: 02/15/96				Node: 6			Page: 3A-22
Node Description: Mixing pumps. Design Intention: Mobilize Sludge.							
Parameter/ Guide word	Cause	Consequence	Detection	Mitigating Features	Rank	Bin No.	Remark
Low Flow	Loss of power and/or motor/VFD (Variable Frequency Drive)	Lack of mixing	Strain gauges; pump instruments (current, rpm); gamma probes	Design features, work controls, PM	S0 F3	Not binned since release.	Variable frequency drive (VFD) Preventative maintenance (PM)
		Potential failure of mission	Same as lack of mixing.	Design features, work controls, PM	S0 F3	See remarks.	Not binned because there is no release.
		Pressurization of tank, if power off long enough, results in filter failure and unfiltered release.	Same as lack of mixing.		S1 F3	1	
	Plugging of screen or pump intake	Catastrophic failure of pump (cavitation)	Pump instruments (current, rpm)	Design features, bowl flush capability	S0 F3	See remarks.	Not binned because there is no release.
	Mechanical failures of pump (catastrophic)	Potential damage of other equipment (instruments, tank, etc.)	Same as lack of mixing.	PM	S1 F3	Same as above.	Not binned because there is no release.
		Potential failure of mission	Same as lack of mixing.	PM	S0 F3	Same as above.	Not binned because there is no release.
		Missile from pump penetrates primary tank	Same as lack of mixing.	Design features, work controls, PM	S1 F3	Same as above.	Not binned because there is no release.
	Seismic event (causing deformation or failure of pump shaft)	Catastrophic failure of pump	Perceptions (e.g., movement of ground visual); pump instruments		S0 F1	6	Tank itself may be damaged in seismic event.

Table 3B-1. Hazard and Operability Study - Node 6. (2 sheets)

Project: W-151, Tank 241-AZ-101 Waste Retrieval System Date: 02/15/96				Node: 6		Page: 3A-23
Node Description: Mixing pumps. Design Intention: Mobilize Sludge.						
Parameter/ Guide word	Cause	Consequence	Detection	Mitigating Features	Rank	Bin No.	Remark
Low Flow (Continued)	Characteristics of the nonconnective layer leading to pump failure or degraded operation	Catastrophic failure of pump	Pump instruments (current, rpm)	Design features	S0 F2	See remarks.	Not binned because there is no release.
	Foreign object in flow stream gets past flow screen	See mechanical failure and/or plugging.		Design features (i.e., screen will stop items which will get stuck in impeller); work controls (controlled startup)	S0 F3	See remarks.	Not binned because there is no release.
High flow	Pump overspeed due to viscosity change	Tank erosion	Strain gages, pump instruments	Control pump speed; shut pump	S0 F2	4	
	Variable Frequency Drive failure (locked in overspeed)	Tank erosion	Strain gages, pump instruments	Shut down pump	S0 F3	4	

Table 3B-1. Hazard and Operability Study - Node 7. (2 sheets)

Project: W-151, Tank 241-AZ-101 Waste Retrieval System Date: 05/15/96					Node: 7		Page: 3A-24
Node Description: Equipment installation and removal. Design Intention: Worker access to tank during equipment installation and removal; open risers to install and remove equipment.							
Parameter/ Guide word	Cause	Consequence	Detection	Mitigating Features	Rank	Bin No.	Remark
High Exposure	Removal of contaminated equipment	Personnel exposure to direct radiation	Dosimetry	Administrative and work controls on installation/ removal activities	S1 F3	See remarks.	Not binned; see section of test discussing work safety.
		Personnel contamination by direct contact	HPT (Health Physics Technician) survey	Health physics controls; decontamination showers/eyewash available	S1 F3	Same as above.	Same as above.
		Environmental contamination	HPT survey soil samples	Plastic sheeting work controls	S1 F3	Same as above.	Same as above.
	Spill from removal of contaminated components	Environmental contamination	HPT survey soil samples	Plastic sheeting work controls	S1 F3	See as above.	Same as above.
		Personnel exposure to airborne radioactive material via re-suspension	HPT survey	Temporary confinement such as greenhouse, wrapping, flexible receiver for equipment removal	S1 F3	Same as above.	Same as above.
	Overflow of waste from tank	See remarks			S2 F0		Not possible to overflow tank because the only additions for this project are with spray water supplied from a 4500 gallon tank truck.
	Reversal of air flow from tank to atmosphere through riser during installation or removal	Personnel exposure to airborne contaminants (toxic gases and radionuclides)	HPT monitoring; dome space pressure and exhaust flow instruments and alarms	Ventilation system operating; work controls	S1 F3	2	

Table 3B-1. Hazard and Operability Study - Node 7. (2 sheets)

Project: W-151, Tank 241-AZ-101 Waste Retrieval System Date: 05/15/96					Node: 7		Page: 3A-25
Node Description: Equipment installation and removal. Design Intention: Worker access to tank during equipment installation and removal; open risers to install and remove equipment.							
Parameter/ Guide word	Cause	Consequence	Detection	Mitigating Features	Rank	Bin No.	Remark
High Pressure Leak	Hose fault	Occupational worker injury	Visual High pressure spray pump instruments	Design features; work controls; distance	S1 F3	See remarks	Requires close proximity to point of discharge. Not binned; see section of text discussing worker safety.
	Pump Fault (catastrophic)	Same as hose fault.	Visual High pressure spray pump instruments	Design Features; work controls; distance	S2 F3	See remarks.	Not binned; see section of text discussing worker safety.
	Relief Valve fault	Same as hose fault.	Visual High pressure spray pump instruments	Design Features; work controls; distance	S2 F3	Same as above.	Same as above.
	Variable Frequency Drive fault (i.e., pump overspeed)	Same as hose fault.	Visual High pressure spray pump instruments	Design Features; work controls; distance	S2 F3	Same as above.	Same as above.

This page intentionally left blank.