JDH (2)

JUL 30 1998

ENGINEERING DATA TRANSMITTAL

Page 1 of 1

1. EDT 622244

2. To: (Receiving Organization) Distribution	3. From: (Originating Organization) TWRS Projects/SST Retrieval	4. Related EDT No.: n/a
5. Proj./Prog./Dept./Div.: D2991 W-320 TWRS/TCPN # ~~D2MA1~~	6. Design Authority/ Design Agent/Cog. Engr.: JW Bailey, NHC	7. Purchase Order No.: n/a
8. Originator Remarks: For approval and release of a new supporting document. This document has been generated to ensure retrievability of the Project W-320 "HVAC Calculations, Vol. 4".		9. Equip./Component No.: n/a
		10. System/Bldg./Facility: 241-C-106
11. Receiver Remarks: 11A. Design Baseline Document? [X] Yes [] No		12. Major Assm. Dwg. No.: n/a
		13. Permit/Permit Application No.: n/a
		14. Required Response Date:

15. DATA TRANSMITTED

(A) Item No.	(B) Document/Drawing No.	(C) Sheet No.	(D) Rev. No.	(E) Title or Description of Data Transmitted	(F) Approval Designator	(G) Reason for Transmittal	(H) Originator Disposition	(I) Receiver Disposition
1	HNF-2486	-	0	Project W-320, 241-C-106 Sluicing, HVAC Calculations, Vol. 4	NA			-

16. KEY

Approval Designator (F)	Reason for Transmittal (G)		Disposition (H) & (I)	
E, S, Q, D or N/A (see WHC-CM-3-5, Sec.12.7)	1. Approval 2. Release 3. Information	4. Review 5. Post-Review 6. Dist. (Receipt Acknow. Required)	1. Approved 2. Approved w/comment 3. Disapproved w/comment	4. Reviewed no/comment 5. Reviewed w/comment 6. Receipt acknowledged

17. SIGNATURE/DISTRIBUTION
(See Approval Designator for required signatures)

(G) Reason	(H) Disp.	(J) Name	(K) Signature	(L) Date	(M) MSIN	(G) Reason	(H) Disp.	(J) Name	(K) Signature	(L) Date	(M) MSIN
2	1	Design Authority JW Bailey	JW Bailey	7/25/98	S2-48						
		Design Agent	MC Davenport	7/25/98							
2	1	Cog.Eng.	~~CF Graves~~ MC Davenport	7/25/98	S2-48						
2	1	Cog. Mgr. JW Bailey	JW Bailey	7/25/98	S2-48						
		QA									
		Safety									
		Env.									

18. MC Davenport ~~CF Graves~~ 3/24/98 Signature of EDT Originator Date 7/25/98	19. Authorized Representative for Receiving Organization Date	20. JW Bailey 3/24/98 J.W. Bailey Design Authority/ Cognizant Manager Date 7/25/98	21. DOE APPROVAL (if required) Ctrl. No. [] Approved [] Approved w/comments [] Disapproved w/comments

BD-7400-172-2 (05/96) GEF097

BD-7400-172-1

Project W-320, 241-C-106 Sluicing HVAC Calculations, Vol. 4

John W. Bailey
Numatec Hanford Co., Richland, WA 99352
U.S. Department of Energy Contract DE-AC09-96RL13200

EDT/ECN: 622244 UC: 506
Org Code: 8C452 Charge Code: D2991/HANA0600
B&R Code: EW3130010 Total Pages: 195

Key Words: W-320, Sluicing, Tank 241-C-106, Tank 241-AY-102, WRSS, calculations, HVAC.

Abstract: This supporting document has been prepared to make the FDNW calculations for Project W-320, readily retrievable.

Product cut sheets in this document have been reviewed and are not Copyrighted.

TRADEMARK DISCLAIMER. Reference herein to any specific commercial product, process, or service by trade name, trademark, manufacturer, or otherwise, does not necessarily constitute or imply its endorsement, recommendation, or favoring by the United States Government or any agency thereof or its contractors or subcontractors.

Printed in the United States of America. To obtain copies of this document, contact: Document Control Services, P.O. Box 950, Mailstop H6-08, Richland WA 99352, Phone (509) 372-2420; Fax (509) 376-4989.

Release Approval 7/30/98 Date

DATE: HANFORD RELEASE
STA: 4 ID: 2
JUL 30 1998
Release Stamp

Approved for Public Release

Project W-320, 241-C-106 Sluicing HVAC Calculations, Vol. 4

TABLE OF CONTENTS

Calc. No.	Title	Page
W320-28-030	Cooling Load in Pump Pit 241-AY-102	A-i
W320-28-031	Pressure Relief Seal Loop Design Verification	B-i
W320-28-032	Process Building Piping Stress Analysis	C-i
W320-28-033	Process Building Duct Support Stress Analysis	D-i
W320-28-034	Exhaust Skid Maximum Allowable Leakage Criteria	E-i
W320-28-035	Recirculation Heater, N509 Duct Requirements	F-i

W320-28-030

Cooling Load in Pump Pit 241-AY-102

KAISER ENGINEERS
HANFORD

	CALCULATION IDENTIFICATION AND INDEX	Page i of ii Date 12-19-94

This sheet shows the status and description of the attached Design Analysis sheets.

Discipline Mechanical WO/Job No. W-320 Calculation No. ~~W-320-H-0030~~ W320-2B-030

Project No. & Name 931-EWW-320 Tank 241-AY-102 Sluicing

Calculation Item Cooling Load in Pump Pit 241-AY-102

These calculations apply to:

Dwg. No. Rev. No.

Dwg. No. Rev. No.

Other (Study, CDR) Rev. No.

The status of these calculations is:

[] Preliminary Calculations

[X] Final Calculations

[] Check Calculations (On Calculation Dated)

[] Void Calculation (Reason Voided)

Incorporated in Final Drawings? [] Yes [X] No

This calculation verified by independent "check" calculations? [] Yes [X] No

Original and Revised Calculation Approvals:

	Rev. 0 Signature/Date	Rev. 1 Signature/Date	Rev. 2 Signature/Date
Originator	[illegible] 1-13-95	R. Pmi 7/25/95	
Checked by	Carl Price 1/17/95	Danny Nguyen 7/25/95	
Approved by	[illegible] 1-17-95	R. Pmi 7/25/95	
Checked Against Approved Vendor Data		Charles T. Li 4/16/98	

INDEX

Design Analysis Page No.	Description
i	Calculation Identification and Index
ii	Calculation Cross Index
1	Objective, Design Inputs, Assumptions, References, Results & Conclusions
2-4	Calculation
A-1 - A-~~8~~9	Attachments

ICF KAISER HANFORD

DESIGN ANALYSIS

Calc. No. W320-~~H~~ 20-0030
Revision ~~0~~ 1

Client: WHC

WO/Job No. W-320

Subject: COOLING LOAD ON PUMP PIT 241-AY-102

Date 12-14-94 By William Hodges

Checked 1/17/95 By G. Rice Danny Nguyen 7/25/95

Location: 241-AY Tank Farm

Revised 7/17/95 By R. Pan

OBJECTIVE: The purpose of the following calculations is to estimate the temperature of pump pit 241-AY-102 located at the AY tank farm and determine the cooling requirements.

DESIGN INPUTS:

1. The pump motor is variable speed rated at ~~125~~ 89 hp. (normal operating) per Ref.(8).
2. ~~The pit ambient design temperature is 120 °F.~~
3. The exterior walls are of concrete construction.
4. The cover block is 2 ft.
5. The pit demensions are as shown on drawing H-2-64314 Sht 1 Rev 1.
6. Maximum allowable pit temperature is 180 °F per Ref.(7).

ASSUMPTIONS:

1. ~~Maximum acceptable air temperature is 110 °F with a safety factor of 10 °F.~~
2. Outside air temperature is assumed to be 101° F, inside air temperature is assumed to be 110 °F. The sol-air temp of the cover is assumed at 130 °F. (Ref 1 Table 1), therefore "delta-T" will be assumed to be 20 °F.
3. The temperature of the earth around the pit is 78.7 °F (PNL data average value for August).
4. The pump is the only heat source in the pit..

REFERENCES:

1. ASHRAE Fundamentals, 1993
2. ~~Construction guide Spec. (GS16400.SP section 2.3.2)~~
3. H-2-64314 Sht. 1
4. ~~WHC-SD-W320-FDC001 Rev. 2~~
5. H-2-818693 Sht. 1 Rev. 0
6. ~~LOI 7F800-94-051~~
7. LOI 8K800-95-026
8. LAWRENCE PUMP PERFORMANCE CUT SHEET
9. RELIANCE MOTOR CUT SHEET

RESULTS & CONCLUSIONS

The final pit temperature without cooling is ~~182~~ 193 °F.
The cooling required to maintain 110 °F. is ~~11,000~~ 12,000 Btu/hr.

Client: DEPARTMENT OF ENERGY WO/Job No. W-320

Subject: COOLING LOAD ON PUMP PIT 241-AY-102 Date 12-14-94 By William Hodges

Checked 1/17/95 By C. Rice

Location: 241-AY Tank Farm Revised By _____

7/25/95

CALCULATION

R-Values

1. Inside Air film (REF. 1)

$R_{ia} := .68$ h*ft^2*F/Btu

2. Cover Air film

$R_{ica} := .61$ h*ft^2*F/Btu

$R_{oca} := .25$

3 Concrete per inch thickness

$R_c := 0.075$ h*ft^2*F/Btu

4. Air Film floor

$R_{fi} := .92$ h*ft^2*F/Btu

U-Values

I ft. thick concrete construction
U_{w1}=1/R

$$U_{w1} := \frac{1}{R_{ia} + R_c \cdot 12}$$

$U_{w1} = 0.6329$ Btu/hr*ft^2*F

2 ft. thick concrete cover

$$U_{c2} := \frac{1}{R_{ica} + R_{oca} + R_c \cdot 24}$$

$U_{c2} = 0.3759$ Btu/hr*ft^2*F

2 ft. thick concrete floor

$$U_{f2} := \frac{1}{R_{fi} + R_c \cdot 24}$$

$U_{f2} = 0.3676$ Btu/hr*ft^2*F

AREAS

Wall areas-Total area of the 1 ft concrete wall is found to be 182 ft^2. (Ref. 3)

Total area of the cover and floor is found to be 48 ft^2 each.

From Newton's Law of Cooling:

Q=UA(delta-T)

Q is the heat loss, Btu/hr, U is the heat transfer coefficient of the material, A is the total surface area, and delta-T is the desired temperature change. In this case:

Client: WHC

WO/Job No. W-320

Subject: COOLING LOAD ON PUMP PIT 241-AY-102

Date 12-14-94 By William Hodges

Checked 1/17/95 By R. Rice

Revised 7/17/95 By R. Rice

Danny Nguyen 7/25/95

Location: 241-AY Tank Farm

Heat produced by the motor due to ineficiecy of the motor. ~~(Ref. 2)~~

~~Efficiency = 95.4% @ 125 hp (Ref 5)~~

$Q_m := \cancel{125}\ 94.98 \cdot \cancel{.046} \cdot 746 \cdot 3.413 \cdot \left(\frac{1 - .937}{.937}\right)$

$\frac{89\,bhp}{.937} = 94.98\ ehp$

bhp per Attachment 8
motor efficiency per Attachment 9

$Q_m = \cancel{1.464 \cdot 10^4}$ Btu/hr

16,259.5

Surface area of the pump pit.

Area of the 1.5 ft. thick concrete wall.

$A_1 := 182$ Ft^2

Area of the 2 ft. thick concrete floor.

$A_{f2} := 48$ Ft^2

Area of the Cover Block

$A_r := 48$ Ft^2

The final temperature in the pit due to the heat of the motor.

$$Q_m = \left[U_{c2} \cdot A_r \cdot (T_1 - 130) + U_{f2} \cdot A_{f2} \cdot (T_1 - 78.7) + U_{w1} \cdot A_1 \cdot (T_1 - 78.7)\right]$$

$$T_1 := -1. \cdot \frac{\left(Q_m + 130. \cdot U_{c2} \cdot A_r + 78.7 \cdot U_{f2} \cdot A_{f2} + 78.7 \cdot U_{w1} \cdot A_1\right)}{\left(-1. \cdot U_{c2} \cdot A_r - 1. \cdot U_{f2} \cdot A_{f2} - 1. \cdot U_{w1} \cdot A_1\right)}$$

$T_1 = \cancel{181.8652}\ 192.6$ °F

The final estimated temperature of the Pump pit due to the heat of the motor is estimated at ~~182~~ 193 °F. Cooling is required since it exceeds 180°F limit.

DESIGN ANALYSIS

Client: WHC

WO/Job No. W-320

Subject: COOLING LOAD ON PUMP PIT 241-AY-102

Date 12-14-94 By William Hodges

Checked 1/17/95 By B. Rice

Revised 7/17/95 By R. Pim

Dawn Wagner 7/25/95

Location: 241-AY Tank Farm

Cooling required to lower the temperature to 110 °F . ~~(Ref. 6)~~

Delta-T $\Delta T := 110 - 78.7$

Heat transfer through the walls, floor and cover block.

Walls

$Q_1 := U_{w1} \cdot A_1 \cdot \Delta T$

$Q_1 = 3.6054 \cdot 10^3$ Btu/hr

Floor

$Q_2 := U_{f2} \cdot A_{f2} \cdot \Delta T$

$Q_2 = 552.3529$ Btu/hr

Cover Block

$Q_r := U_{c2} \cdot A_r \cdot (110 - 130)$

$Q_r = -360.9023$ Btu/hr

$Q := \left[Q_m - \left(Q_1 + Q_2 + Q_r\right)\right]$

$Q = \cancel{1.0843 \cdot 10^4}$ 11,741 Btu/hr

The cooling required for the Pump Pit 241-AY-102 is ~~11,000~~ 12,000 Btu/hr.

Attach I

ckd GR

Dennis Bergen 2/28/95

Table 1 Sol-Air Temperatures t_e for July 21, 40°N Latitude

$$t_e = t_o + \alpha I_t/h_o/h_o - \epsilon\delta R/h_o$$

Time	Air Temp., t_o	Light Colored Surface, $\alpha/h_o = 0.15$ N	NE	E	SE	S	SW	W	NW	HOR	Dark Colored Surface, $\alpha/h_o = 0.30$ N	NE	E	SE	S	SW	W	NW	HOR
	°F																		
1	76	76	76	76	76	76	76	76	76	69	76	76	76	76	76	76	76	76	69
2	76	76	76	76	76	76	76	76	76	69	76	76	76	76	76	76	76	76	68
3	75	75	75	75	75	75	75	75	75	68	75	75	75	75	75	75	75	75	67
4	74	74	74	74	74	74	74	74	74	67	74	74	74	74	74	74	74	74	67
5	74	74	74	74	74	74	74	74	74	67	74	74	75	75	74	74	74	74	77
6	74	80	93	95	84	76	76	76	76	72	74	85	112	115	94	77	77	77	94
7	75	80	99	106	94	78	78	78	78	81	75	84	124	136	113	81	81	81	114
8	77	81	99	109	101	82	81	81	81	92	77	85	121	142	125	86	85	85	85	131
9	80	85	96	109	106	88	85	85	85	102	80	90	112	138	131	96	89	89	89	145
10	83	88	91	105	107	95	88	88	88	111	83	94	100	127	131	107	94	94	94	156
11	87	93	93	99	106	102	93	93	93	118	87	98	99	111	125	118	100	98	98	162
12	90	96	96	96	102	106	102	96	96	122	90	101	101	102	114	123	114	102	101	156
13	93	99	99	99	99	108	112	105	99	124+6	93	104	104	104	106	124	131	117	105	162
14	94	99	99	99	99	106	118	116	102	122	94	105	105	105	105	118	142	138	111	146
15	95+6	100	100	100	100	103	121	124	111	117	95	105	104	104	104	111	146	153	127	138
16	94	98	98	98	98	99	118	126	116	109	94	102	102	102	102	103	142	159	138	131
17	93	98	96	96	96	96	112	124	117	99	93	102	99	99	99	99	131	154	142	112
18	91	97	93	93	93	93	101	112	110	89	91	102	94	94	94	94	111	132	129	94
19	87	87	87	87	87	87	87	87	87	80	87	87	87	87	87	87	87	88	88	80
20	85	85	85	85	85	85	85	85	85	78	85	85	85	85	85	85	85	85	85	78
21	83	83	83	83	83	83	83	83	83	76	83	83	83	83	83	83	83	83	83	76
22	81	81	81	81	81	81	81	81	81	74	81	81	81	81	81	81	81	81	81	74
23	79	79	79	79	79	79	79	79	79	72	79	79	79	79	79	79	79	79	79	72
24	77	77	77	77	77	77	77	77	77	70	77	77	77	77	77	77	77	77	77	70
Avg.	83	86	88	90	90	87	90	90	88	90	83	89	94	99	97	93	97	99	94	104

Note: Sol-air temperatures are calculated based on $\epsilon\delta/h_o = -7$°F for horizontal surfaces and 0°F for vertical surfaces.

Adjustments. Sol-air temperature cycles can be estimated for other dates and latitudes by using the data in Tables 12 through 18, Chapter 27. For any of the times, dates, and wall orientations listed in those tables, the value of I_t is approximately 1.15 × SHGF. However, the 1.15 factor is approximate and only accounts for the solar energy excluded by a single sheet of ordinary window glass. For surfaces with other orientations or slope angles of other than 0°, and for more accurate estimates at incident angles above 50° (particularly critical for southern exposures), the solar intensity can be found by the method outlined in Chapter 27.

Average sol-air temperature. The average daily sol-air temperature t_{ea} can be calculated for any of the situations covered by Tables 12 through 18 of Chapter 27:

$$t_{ea} = t_{oa} + \alpha/[h_o(I_{DT}/24)] - (\epsilon\Delta R/h_o) \qquad (7)$$

where I_{DT} is the sum of two appropriate half-day totals of solar heat gain in Btu/(h·ft²). For example, the average sol-air temperature for a wall facing southeast at 40°N latitude on August 21 would be

$$t_{ea} = t_{oa} + \alpha/h_o[1.15(956 + 205)/24]$$

The daily solar heat gain of double-strength sheet glass is 956 + 205 Btu/(h·ft²) in a southeast facade at this latitude and date (Table 16, Chapter 27); and $\epsilon\Delta R/h_o$ is assumed to be zero for this vertical surface.

Hourly air temperatures. The hourly air temperatures in Column 2, Table 1 are for a location with a design temperature of 95°F and a range of 21°F. To compute corresponding temperatures for other locations, select a suitable design temperature from Column 6, Table 1 of Chapter 24 and note the outdoor daily range (Column 7). For each hour, take the percentage of the daily range indicated in Table 2 of this chapter and subtract from the design temperature.

Table 2 Percentage of Daily Range

Time, h	%	Time, h	%	Time, h	%
1	87	9	71	17	10
2	92	10	56	18	21
3	96	11	39	19	34
4	99	12	23	20	47
5	100	13	11	21	58
6	98	14	3	22	68
7	93	15	0	23	76
8	84	16	3	24	8

Example 1. Air temperature calculation. Calculate the summer dry-b temperature at 1200 h for Carson City, Nevada.

Solution: From Table 1, Chapter 24, the daily range is 42°F the 1% design dry-bulb temperature is 93°F. From Table 2, the perc age of the daily range at 1200 hours is 23%. Thus, the dry-bulb temp ture at 1200 h = Design dry-bulb − (Daily range × Percentage) = − [42(23/100)] = 83.3°F.

Data limitations. The summer design temperatures in Tab Chapter 24, are based on the 4-month period, June through tember. (Canadian data are based on July only.) The outdoor range is the difference between the average daily maximum average daily minimum temperatures during the warmest mo More reliable results could be obtained by determining or esti ing the shape of the temperature curve for typical hot days a building site and considering each month separately. Peak ing load is often determined by solar heat gain through fene tion; this peak may occur in winter months and/or at a time o when outside air temperature is not at its peak.

Heat Gain through Fenestration

The sections that include Equations (30) through (41) in C ter 27 describe one method used to calculate space coolin resulting from heat transfer through fenestration. The sola gain profiles listed in Chapter 27 are for fenestration area

ckd. GR
7/25/95

CHAPTER 22

THERMAL AND WATER VAPOR TRANSMISSION DATA

Building Envelopes 22.1
Calculating Overall Thermal Resistances 22.3
Mechanical and Industrial Systems 22.17
Calculating Heat Flow for Buried Pipelines 22.19

THIS chapter presents thermal and water vapor transmission data based on steady-state or equilibrium conditions. Chapter 3 covers heat transfer under transient or changing temperature conditions. Chapter 20 discusses selection of insulation materials and procedures for determining overall thermal resistances by simplified methods.

BUILDING ENVELOPES

Thermal Transmission Data for Building Components

The steady-state thermal resistances (R-values) of building components (walls, floors, windows, roof systems, etc.) can be calculated from the thermal properties of the materials in the component; or the heat flow through the assembled component can be measured directly with laboratory equipment such as the guarded hot box (ASTM *Standard* C 236) or the calibrated hot box (ASTM *Standard* C 976).

Tables 1 through 6 list thermal values, which may be used to calculate thermal resistances of building walls, floors, and ceilings. The values shown in these tables were developed under ideal conditions. In practice, overall thermal performance can be reduced significantly by such factors as improper installation and shrinkage, settling, or compression of the insulation (Tye and Desjarlais 1983, Tye 1985, 1986).

Most values in these tables were obtained by accepted ASTM test methods described in ASTM *Standards* C 177 and C 518 for materials and ASTM *Standards* C 236 and C 976 for building envelope components. Because commercially available materials vary, not all values apply to specific products. (Previous editions of the handbook can be consulted for data on materials no longer commercially available.)

The most accurate method of determining the overall thermal resistance for a combination of building materials assembled as a building envelope component is to test a representative sample by a hot box method. However, all combinations may not be conveniently or economically tested in this manner. For many simple constructions, calculated R-values agree reasonably well with values determined by hot box measurement.

The performance of materials fabricated in the field is especially subject to the quality of workmanship during construction and installation. Good workmanship becomes increasingly important as the insulation requirement becomes greater. Therefore, some engineers include additional insulation or other safety factors based on experience in their design.

Figure 1 shows how convection affects surface conductance of several materials. Other tests on smooth surfaces show that the average value of the convection part of conductance decreases as the length of the surface increases.

Table 1 Surface Conductances and Resistances for Air

Position of Surface	Direction of Heat Flow	Surface Emittance, ε: Non-reflective ε = 0.90 h_i	R	Reflective ε = 0.20 h_i	R	Reflective ε = 0.05 h_i	R
STILL AIR							
Horizontal	Upward	1.63	0.61	0.91	1.10	0.76	1.32
Sloping—45°	Upward	1.60	0.62	0.88	1.14	0.73	1.37
Vertical	Horizontal	1.46	0.68	0.74	1.35	0.59	1.70
Sloping—45°	Downward	1.32	0.76	0.60	1.67	0.45	2.22
Horizontal	Downward	1.08	0.92	0.37	2.70	0.22	4.55
		h_o	R	h_o	R	h_o	R
MOVING AIR (Any position)							
15-mph Wind (for winter)	Any	6.00	0.17	—	—	—	—
7.5-mph Wind (for summer)	Any	4.00	0.25	—	—	—	—

Notes:
1. Surface conductance h_i and h_o measured in Btu/h·ft²·°F; resistance R in °F·ft²·h/Btu.
2. No surface has both an air space resistance value and a surface resistance value.
3. For ventilated attics or spaces above ceilings under summer conditions (heat flow down), see Table 5.
4. Conductances are for surfaces of the stated emittance facing virtual blackbody surroundings at the same temperature as the ambient air. Values are based on a surface-air temperature difference of 10°F and for surface temperatures of 70°F.
5. See Chapter 3 for more detailed information, especially Tables 5 and 6, and see Figure 1 for additional data.
6. Condensate can have a significant impact on surface emittance (see Table 3).

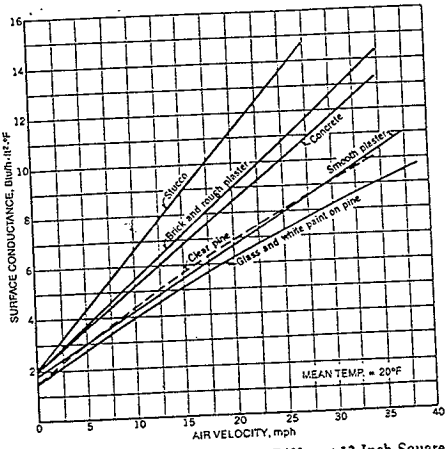

Fig. 1 Surface Conductance for Different 12-Inch-Square Surfaces as Affected by Air Movement

The preparation of this chapter is assigned to TC 4.4, Thermal Insulation and Moisture Retarders.

chd. GG 7/25/95

ies of Common Building and Insulating Materials—Design Values[a] (*Concluded*)

Description	Density, lb/ft³	Conductivity[c] k Btu·in / h·ft²·°F	Conductance C Btu / h·ft²·°F	Resistance R[b] Per Inch Thickness (1/k) °F·ft²·h / Btu·in.	Resistance R[b] For Thickness Listed (1/C) °F·ft²·h / Btu	Specific Heat, Btu / lb·°F
Spray Applied						
Polyurethane foam	1.5 to 2.5	0.16 to 0.18	—	6.25 to 5.56	—	
Ureaformaldehyde foam	0.7 to 1.6	0.22 to 0.28	—	4.55 to 3.57	—	
Cellulosic fiber	3.5 to 6.0	0.29 to 0.34	—	3.45 to 2.94	—	
Glass fiber	3.5 to 4.5	0.26 to 0.27	—	3.85 to 3.70	—	
PLASTERING MATERIALS						
Cement plaster, sand aggregate	116	5.0	—	0.20	—	0.20
Sand aggregate ....0.375 in.	—	—	13.3	—	0.08	0.20
Sand aggregate ....0.75 in.	—	—	6.66	—	0.15	0.20
Gypsum plaster:						
Lightweight aggregate ....0.5 in.	45	—	3.12	—	0.32	
Lightweight aggregate ....0.625 in.	45	—	2.67	—	0.39	
Lightweight aggregate on metal lath ....0.75 in.	—	—	2.13	—	0.47	
Perlite aggregate	45	1.5	—	0.67	—	0.32
Sand aggregate	105	5.6	—	0.18	—	0.20
Sand aggregate ....0.5 in.	105	—	11.10	—	0.09	
Sand aggregate ....0.625 in.	105	—	9.10	—	0.11	
Sand aggregate on metal lath ....0.75 in.	—	—	7.70	—	0.13	
Vermiculite aggregate	45	1.7	—	0.59	—	
MASONRY MATERIALS						
Concretes						
Cement mortar	105 to 135	5.0 to 10.5	—	0.20 to 0.10	—	—
Gypsum-fiber concrete 87.5% gypsum, 12.5% wood chips	51	1.66	—	0.60	—	0.21
Lightweight aggregates including expanded shale, clay or slate; expanded slags; cinders; pumice; vermiculite; also cellular concretes	120	5.5 to 11.0	—	0.18 to 0.09	—	—
	100	3.7 to 5.9	—	0.27 to 0.17	—	0.20
	80	2.5 to 3.5	—	0.40 to 0.29	—	0.20
	60	1.6 to 1.8	—	0.63 to 0.56	—	—
	40	0.93 to 1.11	—	1.08 to 0.90	—	—
	30	0.75 to 0.91	—	1.33 to 1.10	—	0.20
	20	0.63 to 0.83	—	1.59 to 1.20	—	—
Perlite, expanded	50	1.4 to 1.8	—	0.71 to 0.56	—	—
	40	0.93	—	1.08	—	0.10
	30	0.71	—	1.41	—	—
	20	0.50	—	2.00	—	0.32
Sand and gravel or stone aggregate (oven dried)	140	8.0 to 16.0	—	0.13 to 0.06	—	0.18 to 0.22
Sand and gravel or stone aggregate (not dried)	140	10.0 to 20.0	—	0.10 to 0.05	—	0.19 to 0.24
Stucco	116	5.0	—	0.20	—	—
SIDING MATERIALS (on flat surface)						
Shingles						
Asbestos-cement	120	—	4.75	—	0.21	
Wood, 16 in., 7.5 exposure	—	—	1.15	—	0.87	0.31
Wood, double, 16-in., 12-in. exposure	—	—	0.84	—	1.19	0.28
Wood, plus insulating backer board, 0.3125 in.	—	—	0.71	—	1.40	0.31
Siding						
Asbestos-cement, 0.25 in., lapped	—	—	4.76	—	0.21	0.24
Asphalt roll siding	—	—	6.50	—	0.15	0.35
Asphalt insulating siding (0.5 in. bed.)	—	—	0.69	—	1.46	0.35
Hardboard siding, 0.4375 in.	—	—	1.49	—	0.67	0.28
Wood, drop, 1 by 8 in.	—	—	1.27	—	0.79	0.28
Wood, bevel, 0.5 by 8 in., lapped	—	—	1.23	—	0.81	0.28
Wood, bevel, 0.75 by 10 in., lapped	—	—	0.95	—	1.05	0.28
Wood, plywood, 0.375 in., lapped	—	—	1.59	—	0.59	0.29
Aluminum or Steel[j], over sheathing						
Hollow-backed	—	—	1.61	—	0.61	0.29
Insulating-board backed nominal 0.375 in.	—	—	0.55	—	1.82	0.32
Insulating-board backed nominal 0.375 in., foil backed			0.34		2.96	
Architectural glass	—	—	10.00	—	0.10	0.20
WOODS (12% Moisture Content)[c,m]						0.39[n]
Hardwoods						
Oak	41.2 to 46.8	1.12 to 1.25	—	0.89 to 0.80	—	
Birch	42.6 to 45.4	1.16 to 1.22	—	0.87 to 0.82	—	
Maple	39.8 to 44.0	1.09 to 1.19	—	0.92 to 0.84	—	
Ash	38.4 to 41.9	1.06 to 1.14	—	0.94 to 0.88	—	
						0.39[n]
Softwoods						
Southern Pine	35.6 to 41.2	1.00 to 1.12	—	1.00 to 0.89	—	
Douglas Fir-Larch	33.5 to 36.3	0.95 to 1.01	—	1.06 to 0.99	—	
Southern Cypress	31.4 to 32.1	0.90 to 0.92	—	1.11 to 1.09	—	
Hem-Fir, Spruce-Pine-Fir	24.5 to 31.4	0.74 to 0.90	—	1.35 to 1.11	—	
West Coast Woods, Cedars	21.7 to 31.4	0.68 to 0.90	—	1.48 to 1.11	—	
California Redwood	24.5 to 28.0	0.74 to 0.82	—	1.35 to 1.22	—	

ATTACHMENT 2

2.2.11.3 Equipment nameplates: Laminated plastic, 1/16-inch thick with white surface and black core, sized to meet legend requirements. Edges beveled and smooth. Engraved nomenclature sharp and clear. Engraved manufacturer's standard nameplates may be used if equal in quality and legibility.

OR

FOR CPAF
2.2.11.3 Equipment nameplates: HPS I-2-7, sized to meet legend requirements. Engraved manufacturer's standard nameplates may be used if equal in quality and legibility.

2.3 EQUIPMENT

2.3.1 Equipment Enclosures: NEMA ICS 6 Type [1], [3], [3R], [4], [12].

2.3.2 Motors: Provide motors with the following minimum nameplate efficiencies:

Horsepower	Minimum Efficiencies		
	1200 r/min	1800 r/min	3600 r/min
10	90.2	91.0	90.2
15	91.0	92.0	91.0
20	91.7	93.0	91.7
25	92.4	93.5	92.0
30	93.0	93.6	92.4
40	93.6	94.1	93.0
50	93.6	94.1	93.0
60	93.9	94.5	93.6
75	94.5	95.0	94.1
100	94.5	95.0	94.5
125	94.5	95.4	94.5
150	95.0	95.4	94.5
200	95.0	95.4	95.0
200+	95.0	95.4	95.0

2.3.3 Motor Control Centers (MCC): [14-] [20-] inch deep enclosure for control equipment, assembled to provide dead-front unit, and meet the requirements of the Drawings. Incoming feeders shall enter from [bottom] [top]. Size feeder terminal lugs to accept conductors specified.

2.3.3.1 Motor controllers: Horsepower rated with 2 NO and 2 NC auxiliary contacts. Provide compartments with equipment shown on the Drawings.

2.3.3.2 Locate master terminal boards in [bottom] [top] sections and mark with conductor numbers shown on the Drawings.

Attach 4
Z. Pino 7/17/95 chd. GR
Dennis Sugden 7/25/95

Table 2-1. Operating Environmental Conditions.

Equipment/tank number	Maximum design temperature*	Minimum design temperature*	Normal operating temperature (range)
Slurry pump - 241-C-106	82 °C (180 °F)	5 °C (40 °F)	16 to 49 °C (60 to 120 °F)
Heel pump - 241-C-106	82 °C (180 °F)	5 °C (40 °F)	16 to 49 °C (60 to 120 °F)
Sluicer #1 - 241-C-106	82 °C (180 °F)	5 °C (40 °F)	16 to 49 °C (60 to 120 °F)
Sluicer #2 - 241-C-106	82 °C (180 °F)	5 °C (40 °F)	16 to 49 °C (60 to 120 °F)
Imaging system - 241-C-106	49 °C (120 °F)	5 °C (40 °F)	10 to 35 °C (50 to 95 °F)
Miscellaneous probes - 241-C-106	82 °C (180 °F)	5 °C (40 °F)	16 to 49 °C (60 to 120 °F)
Ventilation system - 241-C-106	82 °C (180 °F)	10 °C (50 °F)	10 to 35 °C (50 to 95 °F)
Jumper assemblies - 241-C-106	82 °C (180 °F)	5 °C (40 °F)	16 to 49 °C (60 to 120 °F)
Valve actuators - 241-C-106	66 °C (150 °F)	5 °C (40 °F)	16 to 49 °C (60 to 120 °F)
Supernate pump - 241-AY-102	49 °C (120 °F)	5 °C (40 °F)	10 to 35 °C (50 to 95 °F)
Distributor - 241-AY-102	49 °C (120 °F)	5 °C (40 °F)	10 to 35 °C (50 to 95 °F)
Valve actuators - 241-AY-102	66 °C (150 °F)	5 °C (40 °F)	16 to 49 °C (60 to 120 °F)
Miscellaneous probes - 241-AY-102	49 °C (120 °F)	5 °C (40 °F)	10 to 35 °C (50 to 95°F)
Fluid transfer lines	82 °C (180 °F)	5 °C (40 °F)	16 to 49 °C (60 to 120°F)
Miscellaneous control wiring	Same as parent equipment temperature requirements.		

The following are "common" site and environmental operating conditions for WRSS equipment:

- Ambient temperature range - -29 °C (-20 °F) to 46 °C (115 °F)
- Ambient humidity range - uncontrolled
- In-tank radiation dose rate - 540 rad/h
- Total integrated radiation dose - 1×10^7 rad
- In-tank humidity range - 0% to 100%
- Chemical pH range (wetted components) - 7 to 13.

*Minimum and maximum design temperatures are intended for purposes of structural design.

Note that tank 241-AY-102 pH is maintained by [OH-] control requirements contained in the applicable operating specification documents. Tank 241-AY-102 supernatant shall be maintained within the [OH-] control limits.

Information is unavailable on radiation levels within tank 241-AY-102. The level for tank 241-C-106 shall be used as a conservative estimate for design purposes.

2.2.4 Operating Requirements

Equipment failure shall not preclude its removal. No modification to waste tanks (either single- or double-shell), risers, or pits shall be allowed to retrieve failed WRSS components or parent equipment.

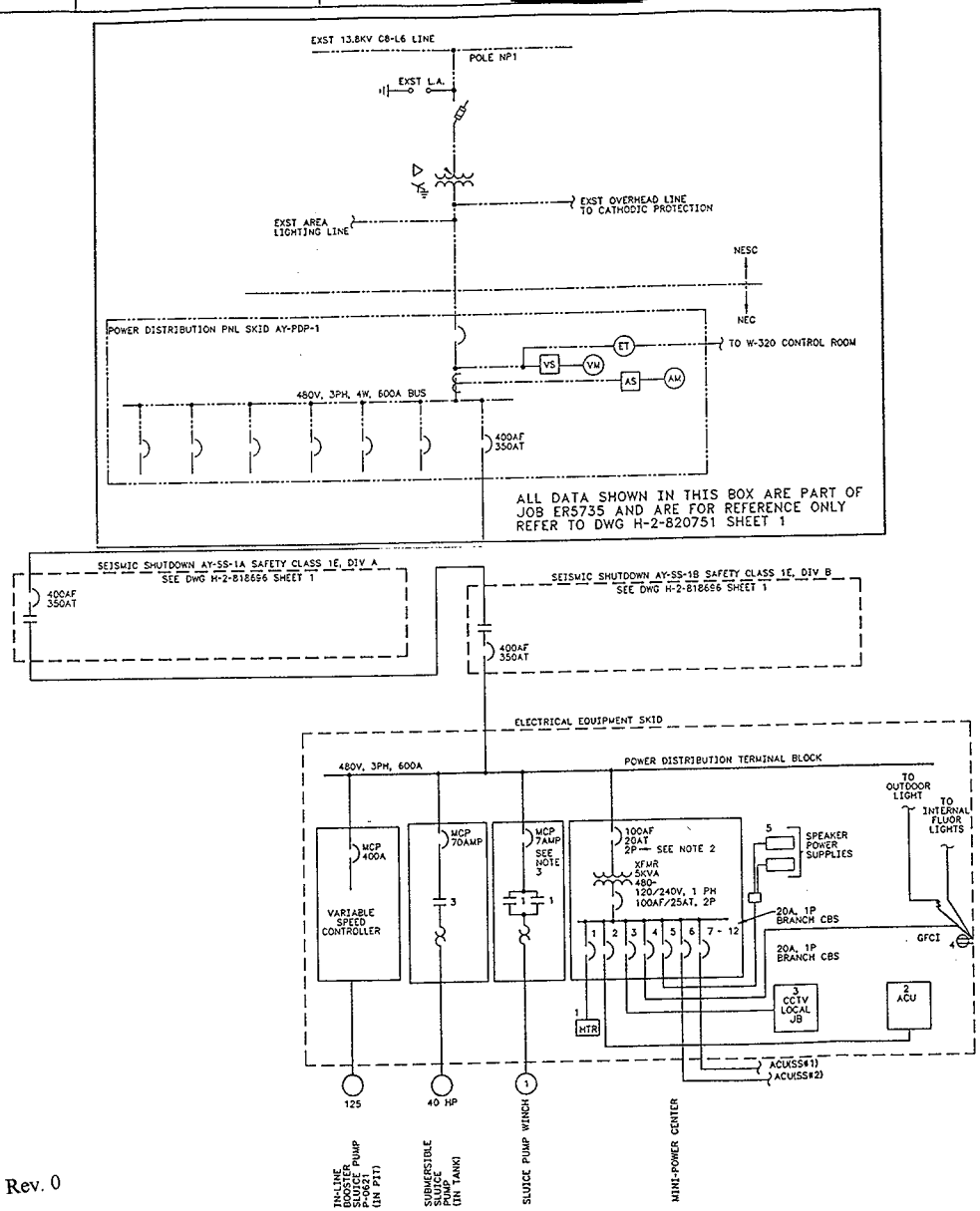

ONELINE DIAGRAM

PANELBOARD MINI PWR CTR LOCATION ELEC EQUIP SKID VOLTS 120/240VAC
MFG & TYPE WHC POWER SUPPLIED FROM AY-PDP-1 1PH,3W
CKT BRKR TYPE PLUG-ON
NEMA TYPE ENCL 3R
☒ SURFACE MOUNTED ☐ FLUSH MOUNTED
☒ MAIN CKT BRKR ☐ MAIN LUGS ONLY ☒ TOP ☐ POT
☐ PANELBOARD GROUND FAULT PROTECTION ☒ GROUND BUS
100 AMP BUS 100 AMP NEUT

SERVICE	VA	NO.		NO.	VA	SERVICE
HEATER	1000	1	100A 20A 1 / 20A	2	1000	ACU
CCTV LOCAL JB	400	3	20A / 20A	4	400	GFCI RECEP, LIGHTS
SPEAKER PWR SUPPLY	400	5	20A / 20A	6	500	ACU, SS#1
ACU, SS#2	500	7	20A / 20A	8		SPARE
SPARE		9	20A / 20A	10		SPARE
SPARE		11	20A / 20A	12		SPARE
TOTAL CONNECTED LOAD	3000	ESTIMATED MAX LOAD			4000	

NOTES:

1. SYMBOLS PER ANSI Y14.15 AND/OR Y32.2.
2. 2 POLE CIRCUIT BREAKER WHERE SHOWN.
3. MOTOR CIRCUIT PROTECTOR W/CONTINUOUS CURRENT RATING.
4. MINI-POWER CENTER, WESTINGHOUSE #P4BG11S05P OR EQUAL, CONSISTING OF 5KVA TRANSFORMER PRIMARY AND SECONDARY BREAKERS AND 12-20A 1P, 120VAC BRANCH CIRCUIT BREAKERS.

EXPIRES 11/18/

HNF-2486, Rev. 0
Page A-11

DESIGNED KB KNOWLES	SAFETY CLASS 3
DRAWN J. DEL ROSARIO	U.S. DEPARTMENT OF ENERGY RICHLAND OPERATIONS OFFICE ICP KAISER HANFORD COMPANY
CHECKED	ELECTRICAL AY-FARM ONE LINE DIAGRAM
SAFETY SEE DR/AT FORM	
ENGR SEE DR/AT FORM	
DWG CHK SEE DR/AT FORM	
REVISED NO. 16	PROJECT W-320 TANK 241-C-106 SLUICING
	SIZE F · CODE 200E · SHEET NO. 7201 · DWG NO. H-2-818693 · REV NO. 0
	SCALE SHOWN · JOB NO. ER4319 · SHEET 1 OF 1

PRELIMINARY

H-2-181423 SH 3 DRAWING LIST

CAD FILE B818693A · CAD DRWG 2J:IBM:ACD2:12.0:NN · WHC

2 PLOT SCALE: 1=1 · KEHCAD

PKG #3

chd. [illegible]
Dawn Nguyen
7/25/95

ATTACHMENT 6 chd-GR
R. Pitt 7/17/95
Danny Nguyen 7/25/95

Westinghouse Hanford Company

Internal Memo

7F800-94-051

KAISER ENGINEERS HANFORD
CONTROLLED DOCUMENT
STATION NO 36
DIST
DATE DEC 14 1994
PROJ / WO W320
NO LE-3

From: Single-Shell Tank Retrieval Projects
Phone: 376-4772 S6-12
Date: December 13, 1994
Subject: PROJECT 93L-EWW-320, TANK 241-C-106 SLUICING, LETTER OF INSTRUCTION, DEFINITIVE DESIGN, ADDENDUM 7

To: F. W. Bradshaw S3-07

cc: See Distribution List

Reference: Letter, S. D. Estey, WHC, to J. W. Bailey, WHC, "Project W-320 Revised Headspace Characterization," 71320-94-056, dated December 6, 1994

This Letter of Instruction (LOI) addendum provides design direction to ICF KH on the following topics:

1. Characterization Changes.
2. H-14 Drawing Preparation ECC.
3. Pit operating temperature criteria clarification.

SCOPE

1. CHARACTERIZATION CHANGES - ICF KH is directed to utilize the revised waste characterization data contained in the reference letter, copy provided as Attachment 1. This is the basis of definitive design pending issuance of a revision to the project FDC characterization appendix. If the characterization data changes result in impacts to the project cost and/or schedule baselines, an appropriate ECC documenting the total project impacts of these changes is to be prepared and submitted to WHC.

2. H-14 DRAWING PREPARATION ECC - ICF KH is directed to prepare an ECC documenting the total project cost and any schedule impacts associated with preparation of H-14 drawings. The H-14 drawings are to be prepared in accordance with guidance contained in Attachment 2. For the purposes of the ECC estimate, ICF KH is to assume that the H-14 drawings are prepared at the completion of the project during the as builting process to avoid the need for any revisions.

3. PIT OPERATING TEMPERATURE CRITERIA CLARIFICATION - The following is provided as a clarification to the intended operating temperature limitations for equipment installed in the AY-102 and C-106 tank pits.

   FDC paragraph 2.2.3, Table 2-1 normal operating temperature ranges are intended to indicate the temperature of the process fluids to which wetted parts of the sluicing system will be exposed and are not to be used as pit environment criteria which must not be exceeded. ICF KH is directed to use a 120°F as the maximum allowable pit environment temperature.

Hanford Oper of Energy

ATTACHMENT 7

R. Pim 7/17/95
Danny Nguyen 7/25/95

Westinghouse
Hanford Company

Internal
Memo

8K800-95-026

From: Single-Shell Tank Retrieval Projects
Phone: 376-4772 S2-48
Date: June 5, 1995
Subject: PROJECT 93L-EWW-320, TANK 241-C-106 SLUICING, LETTER OF INSTRUCTION, DEFINITIVE DESIGN, ADDENDUM 15

KAISER ENGINEERS HANFORD
CONTROLLED DOCUMENT
STATION NO 35
DIST
DATE JUN 1 3 1995
PROJ / WO W-320
NO LE-12

To: F. W. Bradshaw S2-47

cc: See Distribution List

Reference: 1) Letter, G. H. Sanders, RL, to C. A. Augustine, WHC, "TWRS Waste Retrieval Project W-320, Sluicing Tank C-106 Minimum Cost Approach," 95-RTI-042/9502160B, dated April 27, 1995.

2) Letter, C. A. Augustine, WHC, to R. W. Bradshaw, ICF KH, "Project 93L-EWW-320, Tank 241-C-106 Sluicing, Letter of Instruction, Definitive Design, Addendum 14," 8K800-95-021, dated May 8, 1995.

1

This Letter of Instruction (LOI) addendum provides guidance from Westinghouse Hanford Company on the following topics:

1. PRIOR LOI GUIDANCE MODIFICATION

2. FLUSHING REQUIREMENT GUIDANCE MODIFICATION

SCOPE

1. PRIOR LOI GUIDANCE MODIFICATION - The following provisions of previous project LOIs are rescinded or modified as indicated below in order to implement the minimized cost approach direction contained in references 1 and 2. These LOI direction clarifications are being made to remove the potential for confusion in the intended scope for the rebaselined project.

A. Letter 71320-94-051, C. A. Augustine to F. W. Bradshaw, "PROJECT 93L-EWW-320, TANK 241-C-106 SLUICING, LETTER OF INSTRUCTION, DEFINITIVE DESIGN, ADDENDUM 7", dated December 13, 1994

Item 3. PIT OPERATING TEMPERATURE CRITERIA CLARIFICATION - The following is provided to clarify the intended operating temperature limitations for equipment installed in the AY-102 and C-106 tank pits.

FDC paragraph 2.2.3 Table 2-1 normal operating temperature ranges are the temperatures of the process fluids to which wetted parts of the sluicing system will be exposed and are not to be used as pit environment criteria which must not be exceeded. ICF KH is directed to use 180 degrees F as the maximum allowable pit environment temperature.

Hanford Op ent of Energy

Attachment 8

Z. Pini 7/17/95
Danny Nguyen 7/25/95

ISO 9001
QUALITY SYSTEM CERTIFIED
DNV
ISO-9001 CERTIFICATED FIRM

LAWRENCE PUMPS INC.

Curve No.:	2X3X13	Customer:	WHC/Kaiser	Cust. Ref:	W-78259-Z4
LPI Ref.:	17482	User Name:	WHC	Item No:	P-0621(Inline)

Description 2 in. T.S. Inline Slurry
2865 RPM

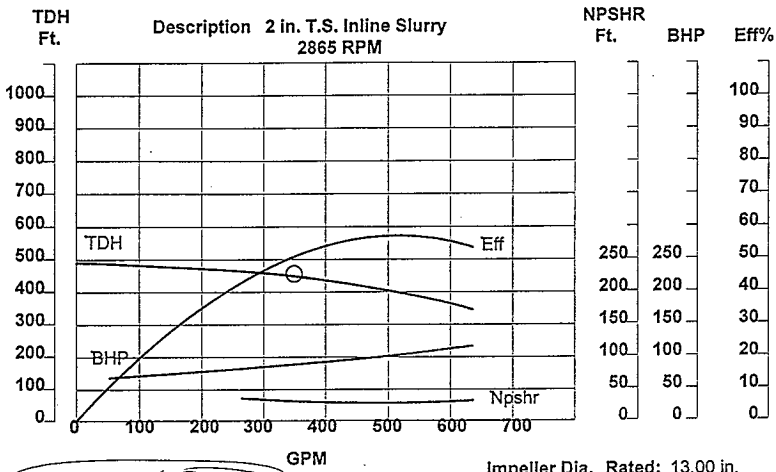

Service: Sluice AY-FARM
Sp.Gr.: 1.12

Visc.: 14.17 Cps
Temp.: 50-95 F.

Impeller Dia. Rated: 13.00 in.
Max: 13.00 in.
Min: 9.00 in.

	Design	Max				
Flow:	350 gpm	638 gpm	NS:	747	NPSHR:	27 ft
head:	455 ft	503 ft	SS:	6000	Solids:	30%
Eff:	51%	57%	Suct Press:	.0 Psi	Solid Size:	.19 in
Power:	89.0 bhp	115.8 bhp	NPSHA:	- ft	Max Solid:	1 in

NORMAL OPERATING POINT PER D. JONES

Dung Nguyen 7/25/95 R. Pm 7/17/95 ATTACHMENT 9

REL. S.O.	FRAME	HP	TYPE	PHASE/ HERTZ	RPM	VOLTS
	447T	250	P	3/60	3570	460

AMPS	DUTY	AMB°C/ INSUL.	S.F.	NEMA DESIGN	CODE LETTER	ENCL.
265	CONT	40/F	1.15	B	G	TEFC

E/S	ROTOR	TEST S.O.	TEST DATE	STATOR RES.@25°C OHMS (BETWEEN LINES)
533708	418143-1-EE	---	---	.0143

PERFORMANCE

LOAD	HP	AMPERES	RPM	% POWER FACTOR	% EFFICIENCY
NO LOAD	0	54.8	3600	6.44	0
1/4	62.5	85.4	3593	73.2	93.7
2/4	125	140	3586	87.2	95.8
3/4	188	201	3579	91.2	96.1
4/4	250	265	3572	92.2	95.9
5/4	312	333	3563	92.0	95.5

SPEED TORQUE

	RPM	TORQUE % FULL LOAD	TORQUE LB.-FT.	AMPERES
LOCKED ROTOR	0	140	515	1760
PULL UP	1200	125	459	1675
BREAKDOWN	3466	251	922	1056
FULL LOAD	3572	100	368	265

AMPERES SHOWN FOR 460. VOLT CONNECTION. IF OTHER VOLTAGE CONNECTIONS ARE AVAILABLE, THE AMPERES WILL VARY INVERSELY WITH THE RATED VOLTAGE

REMARKS: XE MOTOR-TYPICAL DATA-NEMA NOM. EFF. 95.8 PCT.
GUARANTEED MIN. EFF. 95.4 PCT.

DR. BY P. S. GREENE
CK. BY U. M. BYRD
APP. BY U. M. BYRD
DATE 08/08/84

A-C MOTOR PERFORMANCE DATA

E7416A-B-001
ISSUE DATE 07/25/84

CK, ESTIMATE OF MOTOR EFFICIENCY. NOTE, ~ AT FULL LOAD.

File J79263 S

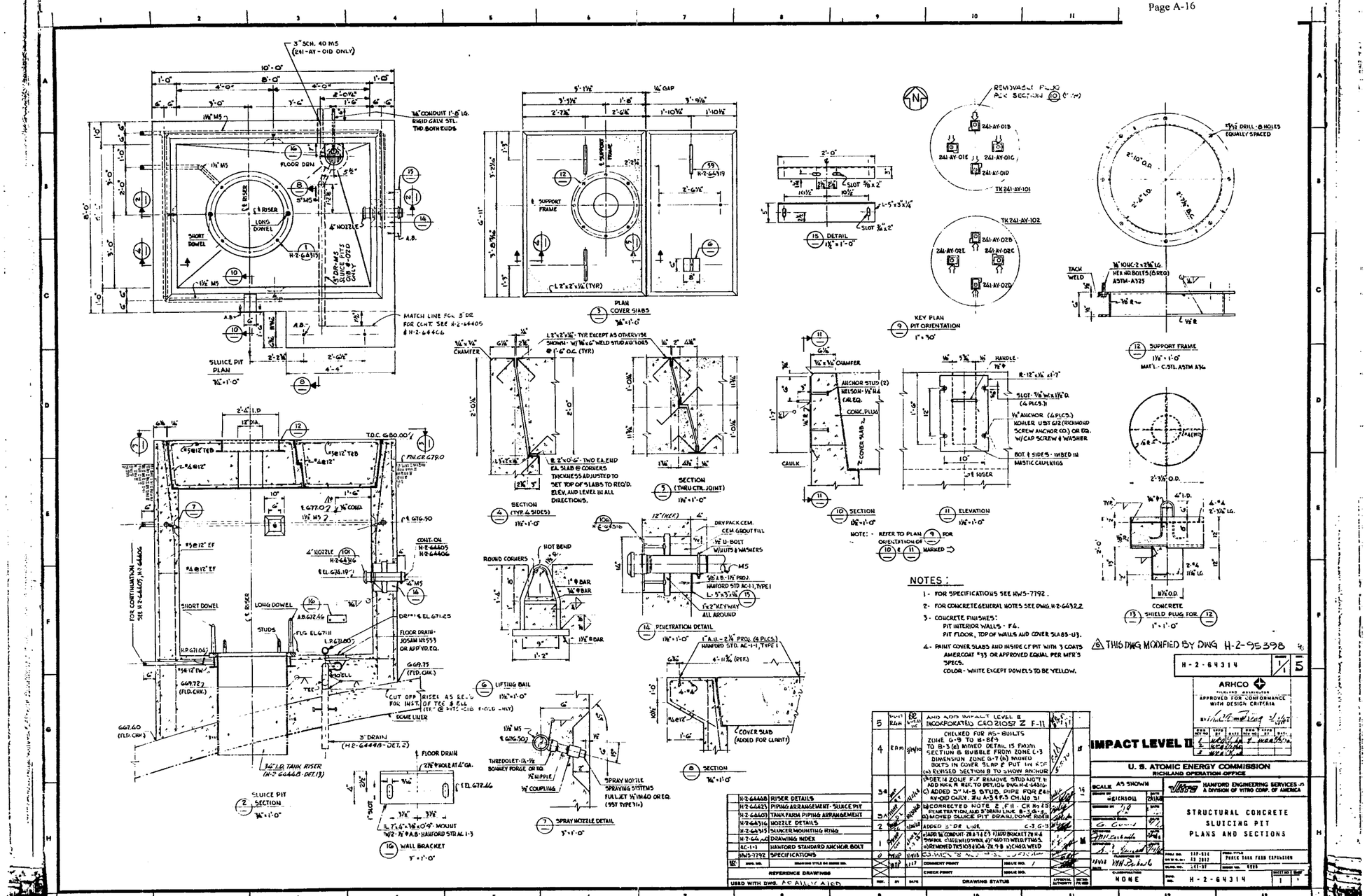

DEC 08 1994

CAUTION
NOT COMPLETE WITHOUT
CURRENT STATUS OF OUTSTANDING
ECNS FROM DATA BASE

W320-28-031

Pressure Relief Seal Loop Design Verification

	CALCULATION IDENTIFICATION AND INDEX	Page i of i Date 3-27-95

This sheet shows the status and description of the attached Design Analysis sheets.

Discipline 28/HVAC WO/Job No. ER4319 Calculation No. ~~W320-41-031~~ W320-28-031

Project No. & Name W-320 Tank 241-C-106 Waste Retrieval (Sluicing)

Calculation Item Pressure Relief Seal Loop Design Verification

These calculations apply to: W320-28-016

Dwg. No. H-2-818477 Rev. No. 0

Dwg. No. N/A Rev. No. N/A

Other (Study, CDR) Rev. No.

The status of these calculations is:

[] Preliminary Calculations

[x] Final Calculations

[] Check Calculations (On Calculation Dated)

[] Void Calculation (Reason Voided)

Incorporated in Final Drawings? [] Yes [X] No

This calculation verified by independent "check" calculations? [] Yes [X] No

Original and Revised Calculation Approvals:

	Rev. 0 Signature/Date	Rev. 1 Signature/Date	Rev. 2 Signature/Date
Originator	EL Dalpiaz PHL 3-28-95		
Checked by	PH Langlie 3-28-95		
Approved by	PH Langlie 3-28-95		
Checked Against Approved Vendor Data	Charles T. Li 4/16/98		

INDEX

Design Analysis Page No.	Description
i	Calculation Identification and Index
1-5	Interoffice Memorandum E.L. Dalpiaz to C.B. Organ dated 3-17-95
A1-A28	Appendix A: Data used for design verification: H-2-818477 and W-320-C5 section 15507

ICF Kaiser Hanford Company

INTEROFFICE MEMORANDUM

TO C.B. Organ E6-01

DATE March 17, 1995

FROM E.L. Dalpiaz E.L. Dalpiaz

COPIES TO A.W. Bjorkedal B4-40
P.H. Langowski S3-07
Document Control S3-10

JOB NO.

SUBJECT Design Verification Review - Project W-320

I have completed a design verification of the Safety Class 1 components of the pressure relief seal loop for Tank 241-C-106, project W-320. The verification followed "Design Review Method" as defined by ES-7, Revision 3, Section 6.2. The extent of this review was to verify the size of the pressure relief seal loop for Tank 241-C-106 is adequate to meet design requirements.

The following are my responses to the questions in section 6.2.1.4 of ES-7.

Were design input correctly selected?

The project's Functional Design criteria provided design basis for the pressure relief seal loop. This basis was followed and referred to in the design calculations for the design of the pressure relief seal loop.

Were all necessary conditions considered in the design?

The conditions listed in the calculations to determine the size of the seal loop appear adequate.

Are required assumptions adequately described; are sources identified and reasonable for the design?

Assumptions are listed in the calculations and appear reasonable for the design of the pressure relief seal loop.

Where necessary, are the assumptions reverified when the design is complete?

The assumptions listed would not have to be reverified when the design is complete.

Was appropriate design method used?

Calculations which determined pipe pressure loss and fan characteristics referred to applicable ASHRAE references. Data for pipe dimensions used in the design of the seal loop was taken from applicable ASME/ANSI standards.

WORKING TOWARD
KEH 0008.00 (12/94) KEF065
PLOYEE INVOLVEMENT
~~30H~~-031 REV-0 PHL 3-27-95
28

Were design input correctly incorporated?

Design input has been correctly incorporated except for the function described for the pressure relief loop seal in Table B-9 of the Safety Equipment List. The table states the loop seal "prevents under/over pressure of tank C-106". Design input has been established in the Functional Design Criteria for under pressure but not over pressure. The Functional Design Criteria and LOI clearly establish the seal loop is to function for under pressure in the tanks. Clarification for the function described in Table B-9 should be provided. "over/" will be taken out in the SEL next revision per John C. Conner telecon. 3-27-95

Is design output reasonable compared to design input?

All calculation results reviewed appeared reasonable for the input criteria.

Are necessary design input and verification for interfacing organizations specified in design documents or in supporting procedures or instructions?

The "Draft" construction specification reviewed, and the unchecked drawing of the seal loop outline the functional design requirements, required material and fabrication, quality requirements, testing and submittals for verification.

Was the applicable Hanford Plan Standard (HPS) followed; if not, is documented approval included from DOE-RL?

Hanford Plant Standard SDC.5.1 Standard Design Criteria for Heating, Ventilating and Air Conditioning was followed, LOI memo JPH-95-003 gave direction to not require application of either Safety Class 1 seismic and tornado criteria for the design of the seal loops. Therefore Hanford Plant Standards governing these requirements were not included. Documented approval from DOE-RL was not included.

In addition, the following observations are made.

The seal loop is filled with a silicone fluid per drawing H-2-818477. The calculations should be revised to indicate differences between this fluid and water and the fluid's effect on the seal loop height. Also additional requirements may have to be added to the specifications to test the silicone fluid's properties. The silicone fluid sg is <1.0 so this is conservative. This should not prove necessary with all conservatives in the design.

My conclusion is that the methods used and the results of the calculations show that the design of the pressure relief seal loop is adequate to protect Tank 241-C-106 during under pressure conditions as stated in the Functional Design Criteria.

3-27-95

The following documentation was used in this verification:

Drawing H-2-818477 Review No. 12, dated 1/31/95
Specification W-320-C5 Section 15507, "Draft" dated 9/30/95
Calculation W320-~~H~~-016 Rev. 0, dated 9/28/94
Calculation W320-~~H~~-020 Rev. 0, dated 10/20/94
Functional Design Criteria WHC-SD-W320-FDC-001, Rev. 2, Page 2-4
Safety Equipment List for 241-C-106 Waste Retrieval Project W-320, WHC-SD-WM-SEL-033 Rev. 1, Table B-9 Page B-35
Letter of Instrucation (LOI) Rev. 8, Memo JPH-94-003, dated 7/11/94

1 rev 0 PHR 3-27-95

DESIGN VERIFICATION RECORD

Project/Document Number W-320

Prepared By E.L. Dalpiaz (Print) ; _____ (Print) ; _____ (Print)

Verifier Name E.L. Dalpiaz (Print) Initial ELD Date 3/17/95

Verifier Name _____ (Print) Initial _____ Date _____

Verifier Name _____ (Print) Initial _____ Date _____

Formal Design Verification is determined to be necessary per the Design Verification Screening Criteria and was performed by the following method(s).

1. Alternate Calculation Method YES NO *(Circle One)*
   Calculation Number _____ Revision _____
2. Testing Method YES NO *(Circle One)*
   Test Number _____ Revision _____
   Test Title _____
3. Identical Method YES NO *(Circle One)*
   Document Number _____ Revision _____
   Title _____ Date _____
4. Design Review Method (YES) NO *(Circle One)*
   Design Review Chairman E.L. Dalpiaz
   Finding or Attached Memo Report Number _____
   Date 3/17/95

Formal design verification is complete and acceptable:

Design Verification Officer [signature] Date 3/20/95

ATTACH ALL DOCUMENTATION RELATE[illegible] [illegible]UCTED.

KEH-1980.00 (06/91)
3-27-95

TABLE B-9. VENTILATION SYSTEM

FMEA SAFETY CLASS DESIGNATION

FACILITY: WRSS

TANK FARM: 241-C

SYSTEM: VENTILATION

SYSTEM SAFETY FUNCTION: PROVIDE CONFINEMENT OF HAZARDOUS AEROSOLS; TANK COOLING

SYSTEM SAFETY CLASS JUSTIFICATION: 4,2

SYSTEM SAFETY CLASS: 1

NOTE: EQUIPMENT, COMPONENT OR INSTRUMENT TAG NUMBER ASSIGNED BY RE&C IS FOR TRACKING PURPOSES ONLY.

EQUIPMENT, COMPONENT, INSTRUMENT TAG NO.	EQUIPMENT, COMPONENT, INSTRUMENT NAME	FUNCTION	DRAWING SHT REV ZONE	FAILURE MODE	FAILURE EFFECT ON SYSTEM SAFETY FUNCTION	SAFETY CLASS JUSTIFICATION	SAFETY CLASS
HV-130140	SHUTOFF DAMPER FROM EXISTING AIR INTAKE	ISOLATES EXISTING AIR INTAKE FROM TANK	H-2-818559 2 P21 D2	FAILS OPEN	LOSS OF TANK PRESSURE CONTROL	PRECLUDES IMPLEMENTING ALARA PRINCIPLES; WHC-CM-4-46, SECTION 9, TABLE 1, CRITERION 3	3
1/2" CO2-553-MS	PRESSURE SENSING PIPING	PROVIDES CONNECTION FOR PRESSURE INSTRUMENTATION	H-2-818501 1 P27 E3	LEAK	LOSS OF PRESSURE INDICATION	PRECLUDES IMPLEMENTING ALARA PRINCIPLES; WHC-CM-4-46, SECTION 9, TABLE 1, CRITERION 3	3
2" CO2-550-MS	CO2 PIPING FROM STORAGE TANK TO PRESSURE REGULATOR	FOG SUPPRESSION	H-2-818501 1 P27 D3	LEAK	LOSS OF FOG SUPPRESION AND IN TANK VISUAL MONITORING	PRECLUDES IMPLEMENTING ALARA PRINCIPLES; WHC-CM-4-46, SECTION 9, TABLE 1, CRITERION 3	3
2" CO2-551-MS	CO2 PIPING FROM PRESSURE REGULATOR TO SHUT OFF VALVE	FOG SUPPRESSION	H-2-818501 1 P27 E3	LEAK	LOSS OF FOG SUPPRESION AND IN TANK VISUAL MONITORING	PRECLUDES IMPLEMENTING ALARA PRINCIPLES; WHC-CM-4-46, SECTION 9, TABLE 1, CRITERION 3	3
2" CO2-552-MS	RELIEF VALVE INLET PIPING	PROTECTS PIPING DOWNSTREAM OF PRESSURE REGULATOR	H-2-818501 1 P27 E3	LEAK	LOSS OF PRESSURE PROTECTION	PRECLUDES IMPLEMENTING ALARA PRINCIPLES; WHC-CM-4-46, SECTION 9, TABLE 1, CRITERION 3	3
6" VT-1001-M42	PRESSURE RELIEF LOOP SEAL	PREVENTS UNDER/OVER PRESSURE OF TANK C100	H-2-818501 1 P27 B7	PLUGGED	LOSS OF TANK PRESSURE PROTECTION	PRECLUDES PLACING WRSS IN SAFE SHUTDOWN CONFIGURATION; WHC-CM-4-46, SECTION 9 TABLE 1 CRITERION 15	1
6" VT-1002-M42	PRESSURE RELIEF LOOP SEAL	PREVENTS UNDER/OVER PRESSURE OF TANK C100	H-2-818501 1 P27 B5	PLUGGED	LOSS OF TANK PRESSURE PROTECTION	PRECLUDES PLACING WRSS IN SAFE SHUTDOWN CONFIGURATION; WHC-CM-4-46, SECTION 9, TABLE 1 CRITERION 15	1
818561-028	CARBON DIOXIDE SUPPLY CHECK VALVE	PREVENTS BACKFLOW OF TANK VAPOR TO CARBON DIOXIDE SYSTEM	H-2-818561 1 P27 D2	FAILS OPEN	LOSS OF FOG SUPPRESSION AND IN TANK VISUAL MONITORING	PRECLUDES IMPLEMENTING ALARA PRINCIPLES, WHC-CM-4-46, SECTION 9, TABLE 1, CRITERION 3	3

031 R00 PHK 3-27-96

PARTS/MATERIAL LIST					
QTY REQD	PART/DASH NUMBER	NOMENCLATURE/DESCRIPTION	MATERIAL/REFERENCE	SHEET	ITEM NO.
	-1	ASSEMBLY	-		1
AR	-2	PIPE, 6ø"	PIPE CODE M-42		2
2	-3	FLANGE,6"ø PIPE, WELD NECK	PIPE CODE M-42		3
2	-4	ELL, 6"ø, WELD-SHORT RADIUS	PIPE CODE M-42		4
2	-5	RETURN BEND, 6"ø, 180° SHORT RADIUS	PIPE CODE M-42		5
1	-6	GAUGE, OIL LEVEL	PIPE CODE M-42		6
1	-7	HALF COUPLING,1/4"	PIPE CODE M-42		7
1	-8	GASKET,11"O.D.X6.065" I.D.X1/16"	PIPE CODE M-42		8

NOTES:

1. REFER TO GENERAL NOTES ON SHEET #1, DRAWING H-2-818473.
2. INITIALLY FILL SEAL LOOPS WITH DOW-CORNING 200 SILICONE FLUID, 20 CENTISTOKES, TO MIDPOINT OF LEVEL GUAGE.
3. LEVEL GUAGES LG-1366 AND LG-1367 ARE SAFETY CLASS 3.
4. SEE CONSTRUCTION SPECIFICATION FOR SAFETY CLASS 1 INSPECTION REQUIREMENTS.
5. CRITICAL DIMENSION "A" SHALL BE 5.8 ± 3/32 INCHES.

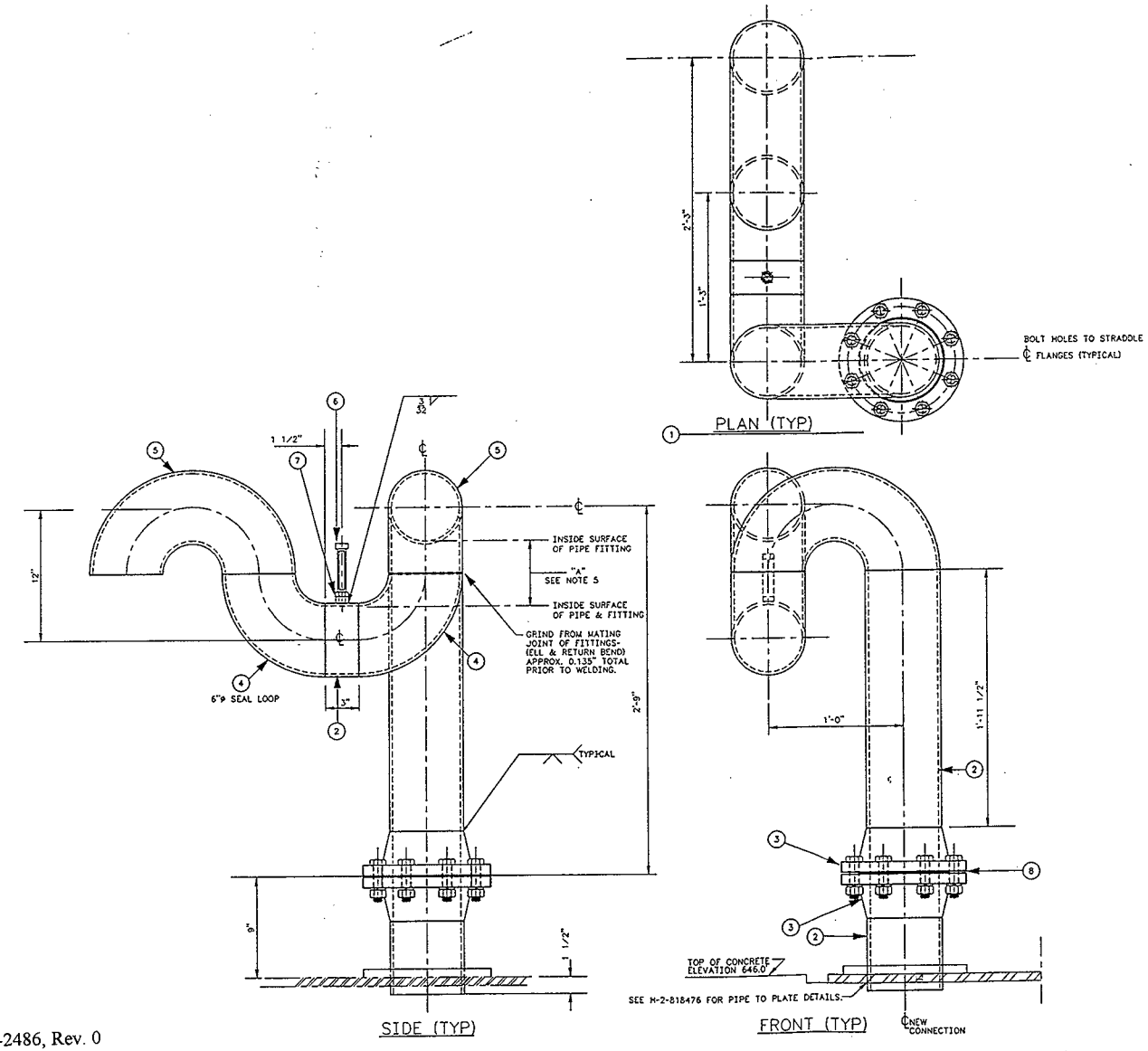

1 DETAILS-SEAL LOOP
H-2-818473 3"= 1'-0"

SCALE IN FEET

PETER H. LANGOWSKI REGISTERED ENGINEER

PRELIMINARY

C.D. RHODEN

SEE DR/AT FORM
SEE DR/AT FORM
SEE DR/AT FORM

U.S. DEPARTMENT OF ENERGY
RICHLAND OPERATIONS OFFICE
ICP KAISER HANFORD COMPANY

HVAC
PRESSURE RELIEF SEAL LOOP
ASSEMBLY DETAILS

W320 TANK 241-C-106 SLUICING

F 241-C 8900 H-2-818477 0

3"=1'-0" ER4319

H-2-818423 DRAWING LIST

B818477A 2J:IBM:AC02:12.0:NN

2 PLOT SCALE: 1=4 KEHCAD

A1

W320-H-031 RUO

HHD 3-27-95

APPENDIX A

3-27-95

Design Verification Package 1-31-95

SECTION 15507

CONTAMINATED AIR HVAC SYSTEMS

PART 1 - GENERAL

1.1 REFERENCES

1.1.1 The following documents, including others referenced therein, form part of this Section to the extent designated herein.

1.1.1.1 American National Standards Institute (ANSI)

A13.1-1981	Scheme for the Identification of Piping Systems

1.1.1.2 American Society of Mechanical Engineers (ASME)

B16.5-1992	Pipe Flanges and Flanged Fittings
B16.9-1993	Factory-Made Wrought Steel Buttwelding Fittings
B31.3-1993	Chemical Plant and Petroleum Refinery Piping
NQA-1-19~~89~~	Quality Assurance Program Requirements for Nuclear Facilities

1.1.1.3 American Society for Testing and Materials (ASTM)

A 53-93a	Pipe, Steel, Black and Hot-Dipped, Zinc-Coated Welded and Seamless
A 105-93b	Forgings, Carbon Steel, for Piping Components
A 182-92a	Forged or Rolled Alloy-Steel Pipe Flanges, Forged Fittings, and Valves and Parts for High-Temperature Service
A 193-93a	Alloy-Steel and Stainless Steel Bolting Materials for High-Temperature Service
A 194-93a	Carbon and Alloy Steel Nuts for Bolts for High-Pressure and High-Temperature Service
A 240-88a	Heat-Resisting Chromium and Chromium-Nickel Stainless Steel Plate, Sheet and Strip for Pressure Vessels
A 276-89	Stainless and Heat Resisting Steel Bars and Shapes

28
320-A-031 rev 0
7-95

A 312-93	Seamless and Welded Austenitic Stainless Steel Pipes
A 403-93	Wrought Austenitic Stainless Steel Piping Fittings
C 449-88	Mineral Fiber Hydraulic-Setting Thermal Insulating and Finishing Cement
C 547-77	Mineral Fiber Preformed Pipe Insulation
E 84-91	Test Method for Surface Burning Characteristics of Building Materials

1.1.1.4 American Welding Society (AWS)

D1.3-89	Welding Sheet Steel and Structures

1.1.1.2 Federal Specifications (FS)

HH-I-558	Insulation, Blankets, Thermal (Mineral Fiber, Industrial Type)
TT-S-00230	Sealing Compound: Elastomeric Type, Single Component (For Caulking, Sealing and Glazing In Buildings and Other Structures)

1.1.1.4 Manufacturers Standardization Society of the Valve and Fittings Industry (MSS)

SP-89, 1991	Pipe Hangers and Supports - Fabrication and Installation Practices

1.1.1.6 Underwriters Laboratories (UL)

Building Materials Directory

1.2 SUBMITTALS

1.2.1 See Section 01300 for submittal procedures.

1.2.2 Approval Required

1.2.2.1 Approval data: Before delivery, submit information listed in the Approval Data List in this Section.

1.2.2.2 Certified material test reports: Before delivery, submit legible reports, certified by responsible manufacturer of materials used in fabrication of tubing, pipe, fittings, flanges, bolting, and weld rod for pipe codes and services listed below. Reports shall present results of chemical analysis and physical tests specified in ASTM Codes and Standard Specifications for production lots and heats of materials. Submit separate reports for Pipe Code M-42.

1.2.2.3 Traceability history: Before fabrication, submit a work plan detailing the proposed method of maintaining records of specific locations of each item covered by a report.

1.2.2.4 Material traceability (including heat/lot numbers) shall be maintained through fabrication for materials requiring Certified Material Test Reports.

1.2.3 Quality Assurance Programs: Before delivery, submit documentation for programs specified in 1.4.5.

1.2.3 Approval Not Required

1.2.3.1 Vendor information: Before installation, submit information listed in the Vendor Information List in this Section.

1.2.3.2 Certificates of conformance

a. With delivery, submit a legible certificate, certified by equipment manufacturer or supplier, stating that materials used in fabrication of the "Pressure Seal Loops" (Pipe Code M-42, Service: Ventilation) meet requirements of the Drawings and this Section.

1.3 SYSTEM DESCRIPTION

1.3.1 Systems are stainless steel piping and duct for exhaust air of Tank C-106 that contains radioactive contaminants. A short section of ventilation system is carbon steel pipe. The seal loop piping is Safety Class 1 and is stainless steel pipe.

~~1.3.2 System power sources are shown on the Drawings.~~

1.4 QUALITY ASSURANCE

1.4.1 Duct insulating materials shall be listed in the UL Building Materials Directory, and carry the UL mark.

1.4.2 Misrepresented Products: See Section 01400 for required measures to prevent the use of misrepresented products.

1.4.3 Welding Qualifications

1.4.3.1 Qualification of welding and procedures (Pipe Code M-4). Personnel and procedures for welding pressure retaining components along with attachments hereto, and pipe supports, shall be qualified in accordance with ASME B31.3, Paragraph 328.2.

1.4.3.2 Qualification of Nondestructive Examination (NDE) Personnel

a. Visual weld examination shall be performed in accordance with ASME B31.3 and appropriate documentation prepared by Certified Welding Inspectors (CWI) who have received certification in accordance with AWS QC1. Certified Associate Welding Inspectors (CAWI) certified in

accordance with the above standard, may perform examination when under immediate direction of CWIs.

b. Welding related examination documentation shall be signed or stamped by individuals performing examination. Where CAWIs perform examinations, documentation shall be signed or stamped by both CAWI and CWI under whom examination were performed.

c. Personnel performing other NDE shall be certified in accordance with Contractor's written practice, which shall meet the requirements of ASNT-TC-1A.

1.4.3.3 Extent of Application. The above qualification requirements also apply for preliminary fabrication of parts, when fabrication is accomplished in shops other than the materials supplier shops, but not necessarily at the worksite.

1.4.4 Deliverable Documentation: The following documents and records, required by this Section, shall be delivered to Construction Document Control (Buyer) in accordance with Section 01720.

Document	Paragraph
Welding Examination Documentation	3.2.1.6
Flushing/Mechanical Cleaning Verification	3.2.5.1
Leak/Pressure Test Certification	3.2.1.6b

1.4.5 Safety Related Products: Safety Class 1 products shall be procured from qualified suppliers having quality assurance programs meeting ASME NQA-1 basic requirements all sections and supplements.

1.4 DELIVERY, STORAGE, AND HANDLING

1.4.1 See Section 01610 for general requirements.

PART 2 - PRODUCTS

2.1 SUBSTITUTES

2.1.1 See Section 01630 for substitution approvals.

2.2 MATERIALS

2.2.1 Pipe and Fittings: See the Pipe Codes in this Section, and details on the Drawings.

2.2.1.1 When approved by the Field Engineer, integrally reinforced branch connections may be used on 2-inch and larger welded main lines instead of buttwelding tees specified in the Pipe Codes.

2.2.1.2 Material and weight shall be as specified in the Pipe Code for each piping system.

2.2.1.3 Close or butt nipples are not permitted, unless shown on the Drawings.

2.2.2 Pipe Joint Sealant (Lubricant) for Threaded Joints

2.2.2.1 For design temperatures up to 500°F, use nonhardening teflon paste: Chesterton "Goldend" No. 7298, Federal Process Company "JC-30", or Lake Chemical Company "Slic-Tite".

2.2.3 Protective coating for piping in contact with earth.

2.2.3.1 Carbon steel piping: Field and Factory applied exterior protective coating; AWWA C213, fusion bonded epoxy coating of 14 Mils minimum thickness, Scotchkote 206N or an approved substitute.

2.2.3 Ductwork Insulation: Provide uniform thickness for each duct size and piece of equipment.

2.2.3.1 Insulation and adhesive shall have UL fire hazard classifications of 25 maximum for flame spread and 50 maximum for smoke developed.

2.2.3.2 Insulation corrosive and moisture adsorption characteristics shall be in accordance with FS HH-I-558.

2.2.3.4 Insulation for exterior surfaces of outdoor duct and filter housing.

a. A ~~1-1/2~~-inch thick glass fiberboard, minimum density, 6 lb/ft^3; Manville No. 817 Spin-Glas board.

2.2.3.5 Weatherproofing: Foster "Sealfas" G.P.M. 35-00 mastic, with "Mast-A-Fab" reinforcing membrane.

2.2.3.6 ACCESSORIES: As specified below, or approved substitutes.

a. Mechanical Fasteners: Stick-Clips, Gemco insulation hangers with washers, type recommended by insulation manufacturer.

b. Cement: ASTM C449; Pabco Pabcote No. 127

2.2.4 Painting: See Section 09900.

2.2.5 Nonshrink Grout: Nonmetallic type; US Grout Corporation "Five Star Grout," Sika Corporation "Sika Grout 212," or Master Builders "Masterflow 713."

2.2.6 Pipe Insulation

2.2.6.2 Outdoor applications:

a. ASTM C 547 molded, sectional, rigid fiberglass pipe covering, Class 1 for temperatures up to 450°F, and Class 2 for temperatures up to 650°F.

b. Metal jacket: Provide circumferential seam closure with straps (bands), or tape with metal foil backing, and silicone sealant to provide weathertight joints, 0.016-inch minimum aluminum sheet.

c. Straps (Bands): Aluminum, with protective coating, 3/8-inch minimum wide and 0.005-inch minimum thick.

2.2.6.3 Insulating cement for forming insulation covering over fittings and valves: ASTM C 449. Cements that contain asbestos are not acceptable.

2.2.6.5 Piping insulation schedule:

Service	Pipe Size (inches)	Insulation Paragraph Reference	Insulation Thickness (inches)
Ventilation M-4	8	2.2.6.2	1.5
Ventilation M-8	all sizes	2.2.6.1	1.5

2.2.7 Pipe Supports: Standard, manufactured components as shown on the Drawings. Pipe supports and attachments welded to pressure containment boundaries may be noncertified material (note, does not apply to Safety Class 1), provided the material bears a type identifying mark, is suitable for welding, and compatible with the material to which it is attached.

2.2.9 Material Limitations for Stainless Steel Components:

2.2.9.1 Tape and adhesive leachable chloride content shall not exceed 15 ppm, and leachable fluoride content not to exceed 10 ppm. Use 3M Company preservation sealing tape No. 481, 9 mil thick, or Kendall Company Polyken Division No. 226. Materials which contact stainless steel piping and components during fabrication and shipping shall not exceed these limits.

2.2.9.2 Grinding or machining of stainless steel shall be done only with tools which are allocated specifically for use on stainless steel. Use of grinding compounds containing halogens is strictly prohibited. Wire brushing of stainless steel shall be done with stainless steel brushes that are new or have not been used on material other than stainless steel.

2.2.9.3 Demineralized water used for cleaning or flushing shall be limited to a chloride content of 25 ppm maximum. Cleaning solutions shall not contain halogenated compounds.

2.2.9 Penetration Sealants: FS TT-S-00230, Type II, Class A, 1-component polyurethane, nonsag type, light-colored

2.2.11 Identification Tags: 0.0478-inch (18-gage) minimum thickness stainless steel. Tag Attachment Wire: 20-gage, solid, stainless steel.

2.3 EQUIPMENT

2.3.1 Valves: Specified in Pipe Codes, unless shown otherwise on the Drawings.

2.~~3.2.1.4~~ Butterfly valves specified in Pipe Code M-8:

Valve No.	Size, inches	Type-Keystone	Operator
HV-13643	~~8~~	~~Model 992~~	~~notch plate handle~~
HV-136140	~~12~~	~~Model 992, cast iron body~~	~~30:1 handwheel gear operator~~
HV-136151	~~8~~	~~Model 992~~	~~notch plate handle~~
HV-136150	~~100~~		
HV-136143	~~154~~		

HV-136144	[illegible]		

2.3.3 Oil Level Gauge (LG-1366 & LG-1367) 1/4" straight, positive vented, McMaster Carr Catalog 9u # 1141K14 (Safety Class 3)

PART 3 - EXECUTION

3.1 INSTALLATION

3.1.1 Equipment

3.1.1.1 Install as shown on the Drawings and in accordance with the manufacturer's instructions.

3.1.1.2 Prime and paint in accordance with the Section 09900 . Paint containing lead is not acceptable.

3.1.2 Piping

3.1.2.1 Fabricate and install pipe and tubing in accordance with ASME B31.3 (for normal service), the Drawings, and this Section.

3.1.2.2 Cut pipe and tubing using methods which result in clean, straight cuts. Do not use tubing cutters on tubing utilizing compression fittings.

3.1.2.3 Ream pipe and tubing to nominal inside diameter after cutting. Remove burrs from threads before assembly.

3.1.2.4 Tools marked for stainless steel shall be used on stainless steel only.

3.1.2.5 Bend pipe and tubing in accordance with ASME B31.3, and meet tolerances given in ASME B31.3. Use methods and equipment which produce bends free of wrinkles, bulges, or kinks. When wall thickness, diameter, and bend radius indicate possibility of wall collapse during bending, fill pipe or tubing with clean silica sand or fusible material similar to Cerro-bend, manufactured by Cerro Corporation.

a. Application of heat to facilitate a pipe bend shall be brought to the attention of the responsible engineer for direction and disposition.

b. Cold springing pipe permitted only if specified on the Drawings.

3.1.2.6 Make joints in threaded piping systems with joint sealant specified. Apply sealant to male threads only.

3.1.2.7 Install tubing fittings in accordance with the manufacturer's instructions.

~~3.1.2.8 Carbon steel embedded in concrete shall be bare.~~

3.1.2.9 Keep piping systems clean. Once fabrication has started, plug or cap ends of piping when installation is not in progress. Cap or plug

openings in fabricated pipe spool assemblies until installation in the piping system. Leave ends of spare lines capped or blind flanged when installation has been completed.

3.1.2.10 Install condensate piping with minimum slope of 1/4 inch in feet in direction of flow, except where shown otherwise on the Drawings.

3.1.2.11 Install condensate piping free of low points or pockets in which condensate could collect, except at designated stations where traps are provided.

3.1.2.12 Make connections in top 180 degrees of condensate return line. Slope condensate vent lines down to condensate return line.

3.1.2.13 Provide vents at high points to purge air pockets and drain taps at low points to ensure complete drainage and drying in piping systems using water for cleaning and leak/pressure testing. Venting may be provided by loosening flanges having minimum of 4 bolts.

3.1.2.14 Pipe supports: Install as shown on the Drawings, in accordance with manufacturer's instructions, and applicable recommended procedures of MSS SP-89.

3.1.3 Welding

3.1.3.1 Weld piping, attachments to pressure retaining components, and pipe supports in accordance with ASME B31.3.

3.1.3.1.1 Protect outdoor welding operation from rain and wind by using barriers to protect welder and weld joint.

3.1.3.1.2 Complete piping welds before tie-in welds to valve pits, risers, or fixed items.

3.1.3.1.3 Remove backing strips if used.

3.1.3.2 Weld duct per AWS D1.3.

3.1.4 Weld Identification

3.1.4.1 Prepare weld identification drawings, isometric and spool, which show relative positions of pressure containing welds and attachment welds to pressure retaining components.

3.1.4.2 Assign weld numbers to pressure containing welds and attachment welds to pressure retaining components as made. Record weld numbers on weld identification drawings as welds are made.

3.1.4.3 Place the welder identification symbol and weld number adjacent to welds upon completion. Place the identification symbol approximately every 3 feet on long seams or large weldments, using one of the marking methods specified in Section 01610.

3.1.4.4 Do not reuse weld numbers. If a weld is completely replaced, assign a new number.

3.1.4.5 Show heat/lot numbers on weld identification drawings for materials requiring Certified Material Test Reports.

3.1.4.6 Maintain material traceability (including heat/lot numbers) through fabrication on weld identification drawings.

3.1.5 Perform NDE, flushing, leak/pressure testing, and disinfecting specified in 3.2 before coating application.

3.1.6 Piping Insulation

3.1.6.1 Preformed:

a. Apply after leak/pressure testing of line has been completed. Apply to pipe surfaces free of water, oil, dirt, loose scale, or other foreign material.

b. Abut sections and fill broken corners with insulating cement.

c. Apply molded, sectional, rigid fiberglass with factory applied nonmetallic jacketing for indoor applications, with adhesive surface clean. Seal lap and end joints with factory applied pressure sensitive lap strip and factory furnished pressure sensitive butt strips.

e. Install outdoor metal jacketed insulation in accordance with manufacturer's recommendations. Position longitudinal joints to shed water. Cover circumferential joints with sealing compound, secure in place with specified straps (bands) or tape. Apply straps (bands) or tape at mid point of 3-foot insulation sections.

f. Insulate valves and fittings in pipe lines smaller than 4 inches with insulating cement. Apply cement in accordance with manufacturer's recommendations.

g. Insulate valves and fittings in 4 to 14-inch pipe lines with sectional or block insulation of same material used on adjacent pipe, with same total thickness. Securely wire in place with 16-gage wire, and cover with 20-gage, 1 by 1-inch wire mesh, or glass fabric, stretched tightly over surface and fastened in place. Use specified tape on fiberglass, and 16-gage wire on calcium silicate, to secure insulation to 14-inch and larger pipe. Top insulation with 1/2 inch minimum thickness coating of insulating cement to present a smooth surface.

h. Mitered sections of straight jacketed pipe insulation may be used for fittings and elbows as an alternative to 3.1.6.1f and 3.1.6.1g. Cement mitered metal jacketed insulation joints with weatherproof seal and specified tape. Cement nonmetallic jacketed insulation joints with weatherproof seal and apply seal strips with lap adhesive.

i. Insulate flanges with sectional or block insulation of same material used on pipe. Terminate insulation on pipe adjacent to flanges with bevel far enough from flanges to permit removal of flange bolts. Insulate flanges to a thickness of 1/2 inch less than adjacent pipe covering to allow for 1/2 inch cement finish. Flange insulation shall extend 2 inches over ends of pipe insulation. Wire flange insulation in place and cover with 1/2 inch minimum thickness layer of insulating cement.

j. Wrap unjacketed insulation, for outdoor applications, applied to flanges, fittings, and valves with glass fabric over wet coat of weatherproof sealant lapping joints at least 2 inches. Apply second coat of weatherproof sealant, 1/8-inch wet thickness, after first coat has dried.

k. Seal penetrations of jacket for hanger rods and clamps for outdoor applications with weatherproof sealant.

3.1.7 Piping Identification: Identify exposed piping systems as to fluid carried and direction of flow as specified in Appendix A.

3.1.8 DUCT

3.1.8.1 Fabricate duct in accordance with drawings and Duct Code D-3.

~~3.1.8.2 Provide companion angle flanges at duct to equipment joints, unless otherwise noted. Use Ethylene Propylene Rubber (EPR) gaskets, 1/16" thick.~~

~~3.1.8.3 Attach hangers and supports to primary building structure. Furnish and install secondary steel structures where required to support duct or equipment.~~

3.1.8.3 Test as specified in 3.2.3.2 before installing external insulation.

3.1.9 DUCT INSULATION

3.1.9.1 Surfaces to receive insulation shall be clean, free of moisture, oil, dirt, scale, rust, and other foreign material.

3.1.9.2 Insulation and finish materials shall be dry when installed.

3.1.9.3 Install a uniform thickness of insulation on each duct size.

3.1.9.4 Make installations continuous through sleeves and prepared openings, unless shown otherwise on the Drawings. Terminate insulation at fire dampers and flexible connections.

3.1.9.5 Score or groove insulation to fit contours of duct. Fill and seal scores, grooves, joints, and penetrations with insulating cement.

3.1.9.6 Where insulation abuts uninsulated surfaces, seal joints with mastic recommended by the insulation manufacturer.

3.1.9.8 Outdoor Duct: Install insulation of 1-1/2 inches on exterior surfaces (see 2.2.3.4). Wrap insulation with two 1/8 inch wet coats of membrane reinforced mastic meeting the requirements of 2.2.3.5. Apply per manufacturers instructions.

3.1.9.9 Attach insulation to metal duct surfaces with adhered clips and washers of 2.2.3.6, and 100 % coverage of insulation cement. Space clips 12 inches maximum on centers.

3.1.10 Identification Tag Features

3.1.10.1 Blanks: 3/4 by 2-inches (unless legends require longer tags), with a 1/8-inch attachment wire hole 3/16 inches in from one end.

3.1.10.2 Characters: Use 1/8-inch stamped or engraved characters.

3.1.10.3 Legends: Provide the following information, unless otherwise specified on the Drawings. Obtain information from the data sheets in this specification, or the Drawings.

a. ICF KH part number

3.1.10.4 Attach identification tags to valves, instruments and other equipment, as required, with twisted wire. Use enough wire to produce ~1-inch minimum installed lengths.

3.2 FIELD QUALITY CONTROL

3.2.1 Nondestructive Examination (NDE) of Welds for Piping

3.2.1.1 Perform NDE for each pipe code listed in the schedule in 3.2. Extent of required examination shall be per ASME B31.3, paragraph 341.4.1. Acceptance criteria for NDE shall be per ASME B31.3, paragraph 341.3.

3.2.1.2 Visual examination: Perform in accordance with ASME B31.3, Paragraph 344.2.

3.2.1.3 Radiographic examination (RT): Perform in accordance with ASME B31.3, Paragraph 344.5.

a. Identify radiographic film with weld identification number and project or work order number assigned to work covered by this Section. In process examination per ASME B31.3, paragraph 344.7 may be substituted for Radiography.

b. Prepare radiographic examination reports as follows.

1) List each radiographic exposure location (0-1, 1-2, ...) individually on radiographic examination report.

2) Indicate location acceptability or rejectability and note discontinuities whether rejectable or not.

3) When report includes radiographs of welds which have been repaired, indicate which welds are repair welds and how many times each weld has been repaired.

c. If additional welding is performed on weld area which has already been examined radiographically, this area is repair area. Identify subsequent radiographs by "R-1, R-2", etc.

3.2.1.4 Perform random examination of piping supports in accordance with ASME B31.3, Paragraph 344.2.

3.2.1.5 For Safety Class 1 systems (Pipe Code M-42), perform 100% examination of piping suppports per ASME B31.3, paragraph 344.2.

3.2.1.6 NDE documentation:

a. Document all examinations of pressure containment welds and welds to pressure containing components for piping systems on NDE/Weld Record Form KEH-0433. See Form KEH-0433 for instructions for recording weld identification drawings, weld numbers, welder identification, welding procedure numbers, weld filler material, visual examinations, nondestructive examinations, and for noting satisfactory completion of leak/pressure testing.

b. Required NDE shall be completed and documented before starting leak/pressure testing.

c. NDE/Weld Record information and weld identification drawings specified in 3.1.4 may be incorporated on a single format or traveler for a specific work package.

d. Document examination of pipe supports by recording on sketches or NDE/Weld Record form.

3.2.2 Nondestructive Examination (NDE) of welds for ducting.

3.2.2.1 Production welds shall be visually inspected per AWS D1.3.

3.2.2.2 Acceptance criteria for welds shall be per AWS D1.3.

3.2.2 Flushing/Testing Preparation: Obtain direction for disposal of waste flushing and testing water, prior to generation of wastes, from the Operating Contractor.

3.2.3 Cleaning and Flushing

3.2.3.1 After NDE is complete and before leak/pressure testing the system, or before connecting the system into existing systems, clean piping internal surfaces mechanically or by flushing as follows.

Service	Pipe Code	Cleaning Method

Ventilation	M-4	Pneumatic Flush or paragraph 3.2.5
Ventilation	M-8	Pneumatic Flush or paragraph 3.2.5
Pressure Relief	M-42	Pneumatic Flush or paragraph 3.2.5

3.2.3.2 Mechanical cleaning: Remove loose dirt, scale, and debris by brushing, wiping, high pressure water jetting, or other mechanical method approved by the Quality Control Inspector (Buyer).

a. When high pressure water jetting or other mechanical cleaning method utilizing water is used, and leak/pressure testing will not be performed immediately after cleaning, dry piping systems by blowing dry oil-free air or nitrogen through lines.

b. Dry until the relative humidity of discharge air is equal to that of inlet air. Use drain taps at low points of piping system to ensure complete drainage and drying. Cap lines or reconnect to system to maintain cleanliness. Note, humidity measurements from inlet and exhaust shall be converted to the same pressure to verify equality.

3.2.4 Pneumatic flushing:

a. Isolate instruments by valving, plugging, or disconnecting.

b. Blow lines clean with dry, oil-free air or nitrogen at 20 to 30 lb/in^2 gage, until discharge air has no visible particulate matter, or for 5 minutes minimum.

c. If leak/pressure testing is not performed immediately after flushing, cap lines or reconnect to system to maintain cleanliness.

3.2.5 Mechanical cleaning may be substituted for flushing if approved by the Quality Control Inspector (Buyer).

3.2.5.1 Provide documented evidence that flushing or mechanical cleaning has been accomplished as specified in this Section.

3.2.6 Duct Cleaning

3.2.6.1 Provide necessary equipment, scaffolding, and materials for cleaning dutwork.

3.2.6.2 Remove debris from inside of new duct, then vacuum to remove small particles of rubbish and dust.

3.2.6.3 Replace duct section(s) removed for cleaning and those that have been damaged.

3.2.7 Leak/Pressure Testing of Piping

3.2.7.1 General:

a. After completion of flushing, perform leak/pressure testing of pipe in accordance with ASME B31.3 and this Section. Use calibrated gages with ranges 1-1/2 to 2 times the test pressure.

b. Document testing of each piping system on "Leak/Pressure Test Certification" Form KEH-1757. Use separate forms to describe and record each piping system. Under "Description" describe piping system in enough detail for correlation to weld identification drawings, shop fabrication drawings, and Project Drawings as applicable. For systems tested segmentally, indicate continuity in "Description" to assure that entire systems have been tested.

c. Pipe joints, fittings, and other potential leak sources to be tested shall be visible and accessible during tests.

d. Install one temporary relief valve during testing. Relief valve shall have a discharge capacity of 125% of capacity of the pressurizing device, and be set to operate at 1-1/3 maximum of the test pressure for hydrostatic testing and not higher than test pressure plus the lesser of 50 lb/in^2 or 10% of the test pressure for pneumatic testing. Tag each relief valve used to show serial number, inspector, date, and pressure setting.

e. Install necessary restraining devices, before applying test pressure, to prevent distortion or displacement of piping.

f. Isolate instruments and other items which could be damaged by test pressures.

g. Continuously maintain test pressure for 10 minutes minimum. Examine weld joints and connections. Piping system, exclusive of possible localized instances at pump or valve packing, shall show no visual evidence of weeping or leaking.

h. Visually examine piping, weld joints and tubing joints, fittings, and other potential leak sources, including welds which attach wear plates, anchors, etc to piping systems, during testing.

i. Complete testing of piping before field application of insulation or protective coating. Pipe with factory applied protective coating shall be considered as having been tested before protective coating application.

1) Pneumatic pressure testing:

a. Perform in accordance with ASME B31.3, Paragraph 345.5. Leaks may be detected by bubble method or equivalent method.

b. Perform testing with dry, oil-free air or nitrogen on tabulated piping systems.

Service	Pipe Code
Ventilation	M-4
Ventilation	M-8
Ventilation	M-42

3.2.[redacted].2 Leak/Pressure Testing of Ductwork: Perform in the presence of the Quality Control Inspector (Buyer) unless otherwise instructed in writing.

a. Pressurize the duct to a pressure of - 1[redacted]"W.G. With test boundary under continuous pressure, examine pressure boundaries duct for leaks.

b. Test duration shall be 15 minutes minimum, plus additional time necessary for finding leaks.

c. No leakage is allowed at - 1[redacted]"W.G.

d. Examine joints and other potential leak sources during testing. Leaks may be detected by bubble method or electronic sound detection. Repair detectable leaks and retest the system.

e. Document ductwork testing on "Leak/Pressure Test Certification," Form KEH-1757.

3.2.8 Safety Related Product Inspections:
Buyer will perform the following inspections on Safety Class 1 [redacted] components:

3.2.8.1 Types of inspection points are the following:

a. Receiving (R): Required for inspection of special fabricated items, equipment, or material scheduled to be delivered to the worksite, or other designated location, which require inspection upon arrival and before installation.

b. Construction inspection (H): Required for inspection of specific construction features, before further construction or installation is allowed to proceed.

3.2.8.2 Prior to welding, **verify (R)** the internal diameters of the following components:

See DWG H-2-818477, HVAC PRESSURE RELIEF SEAL LOOP ASSEMBLY DETAILS for additional details.

Part 2, 6" sch 40 pipe
Part 3, 6" flange
Part 4, 6" elbow, short radius
Part 5, 6" bend, 180 deg short radius
Part 11, gasket

At each end of component, approximately 1/2 inch into component, measure two internal diameters, approximately 90 degrees from each other. The gasket only requires two internal diameter measurements. The average internal diameter for each component shall be greater than 5.9 inches.

3.2.8.3 Following welding and prior to installation, **verify (H)** that dimension "A" of the assembly is 5.8 ± 3/32 inches, as shown on DWG H-2-818477, Detail B. The wall thickness of pipe at dimension "A" may be measured prior to welding.

3.2.8.4 SCHEDULE FOR R, H, AND W POINTS

Section Number	Subject	Type	Work-site	Signature
15507	Part 2, 6" sch 40 pipe	R	X	
	Part 3, 6" flange	R	X	
	Part 4, 6" elbow, short radius	R	X	
	Part 5, 6" bend, 180 deg short radius	R	X	
	Part 11, gasket	R	X	
15507	Assembly Dimension "A"	H	X	

Duplicate table as required

3.3 SCHEDULES

3.3.1 Schedule of Pipe Weld NDE/Testing

	Pipe Codes							
	M-4	M-8	M-42					
NDE/NDT Method								
Visual	C	C	C					
Fitup								
Root Pass								
Cover Pass								
Liquid Penetrant								
Root Pass								
Cover Pass								
Magnetic Particle								
Root Pass								
Cover Pass								
Radiographic								
Completed Weld	B	B	B					
Leak/Pressure								
Completed Weld	A	A	A					
Other								

Legend:

A. Requires witnessing and acceptance by Buyer Title III Acceptance Inspection prior to recording.

B. Not less than 5% of circumferential butt welds shall be examined fully by random radiography. In-process visual examination may be performed in lieu of radiography.

C. Visual examination of at least 5% of fabrication welds.

DUCT CODE D-3 (Safety Class 3)			
Service	Max Operating Pressure " W.G.	Test Pressure " W.G.	Max Operating Temp °F
Ventilation (VT) ~~Package 4~~	~~-7/+7~~ ~~11~~	- ~~17~~	120
Duct Material	18 GA. Stainless steel sheet, ASTM A 240, Type 304L. Stainless steel shapes, ASTM A 276, Type 304L. Slip-on flanges: Light weight, stainless steel, Alaska Copper and Brass SK-37, or an approved substitute.		
Duct Construction	As shown on the Drawings and as specified in this specification.		
Duct Welding	Butt type welding with full penetration weld on seams. companion angle flanges shall be seal welded to duct, or as noted on the Drawings.		
Duct Support	As specified on drawings.		
Gaskets	Ethylene Propylene Rubber (EPR), 1/16" thick. Use full face gaskets with flat face flanges. Garlock "Blue-Gard" style 3700.		
Fasteners	Bolts, ASTM A 193, Grade B8. Heavy hex nuts, ASTM A 194, Grade 8F, UNC threads.		

PIPE CODE M-4 (Contaminated) (Safety Class 3)			
Service	Max Operating Pressure "W.G.	Test Pressure lb/in² gage	Max Operating Temp °F
Ventilation (VT) ~~Package 4~~	~~-40/+40~~ ~~-6/+6~~	~~30~~15	120
Sizes	8-inch		
Pipe	ASTM A 53, Type E or S, Grade B black steel		
Wall Thickness	Schedule 40		
Fittings (1)	ASTM A 234, Grade WPB, wrought steel, buttwelding in accordance with ASME B16.9. Wall thickness to match pipe.		
Unions	None		
Flanges	ASTM A 105, Class 150, raised face, weld neck, in accordance with ASME B16.5. Bore to match pipe ID. Use slip-on for sizes 8-inch and larger. Use flat face where mating to flat face flanges.		
Bolting	ASTM A 193, Grade B6, alloy steel studs, and ASTM A 194, Grade 2, heavy hex nuts.		
Gaskets	Ethylene Propylene Rubber (EPR), 1/16" thick. Use full face gaskets with flat face flanges. Garlock "Blue-Gard" style 3700.		

PIPE CODE M-8 (Safety Class 3)			
Service	Max Operating Pressure "W.G.	Test Pressure lb/in² gage	Max Operating Temp °F
Ventilation (VT) ~~Package 4~~	-40/+40	~~30~~ 15	120
Sizes	All sizes		
Pipe	ASTM A 312, Grade TP 304L, seamless.		
Wall Thickness	Schedule 40S		
Fittings	ASTM A 403, Class WP 304L, buttwelding in accordance with ASME B16.9, wall thickness to match pipe.		
Flanges	ASTM A 182, Grade F 304L, Class 150, forged, raised face, weld neck in accordance with ASME B16.5. Bore to match pipe ID. Use flat face where mating to flat face flanges.		
Bolting	ASTM A 193, Grade B8, alloy steel studs, and ASTM A 194, Grade 8F, heavy hex nuts.		
Gaskets	Ethylene Propylene Rubber (EPR), 1/16" thick. Use full face gaskets with flat face flanges. Garlock "Blue-Gard" style 3700.		
Valves ~~Ball~~ Butterfly ~~Expansion Joint~~	Keystone, Model 992 and 999 or approved substitute. ~~material see paragraph 2.2.1.4~~ ~~Stainless Steel~~, Class 150, flat face flanged ends, EPR/EPDM Seats.		

PIPE CODE M-42 (Safety Class 1)			
Service	Max Operating Pressure inches water gage	Test Pressure lb/in^2 gage	Max Operating Temp °F
Vent (VT)	~~-40/+40~~ ~~-6/+6~~	30 ~~15~~	120
Size	6-inch		
Pipe	ASTM A 312, Grade TP 304L, seamless.		
Fittings	ASTM A 403, Class WP 304L, buttwelding in accordance with ASME B16.9, wall thickness to match pipe.		
~~Half Coupling~~	~~1/4", CL 150, THD, ASTM A 182, Grade F 304L~~		
Flanges	ASTM A 182, Grade F 304L, Class 150, forged, raised face, weld neck in accordance with ASME B16.5. Bore to match pipe ID. Use flat face where mating to flat face flanges.		
Bolting	ASTM A 193, Grade B8, alloy steel studs, and ASTM A 194, Grade 8F, heavy hex nuts.		
Gaskets	Compressed fiber, nonasbestos, 1/16" thick sheet: Garlock "Blue-Gard" Style 3000. Use full face gaskets with flat face flanges.		
~~Gauge~~	~~Oil Level, 1/4", Straight Positive Vented. Mc Master-Carr, Catalog 90 #114K14, (Safety Class 3)~~		

Project No. W-320-C5

Project Title Tank 241-C-106 Sluicing Pkg IV - C Tank Farm

Specification Section 15507

APPROVAL DATA LIST
("X" Indicates Required Data)

1	2	3	4	5 DATA									6
EPN IDENTIFICATION	DESCRIPTION	REFERENCE DRAWING	SPECIFICATION PARAGRAPH	Dimensional	Equipment	Specifications	Material Description	Performance	Circuit or	Data Sheets			REMARKS
	Butterfly Valves/Actuator		Pipe Code M-8	X	X	X	X			X	X	X	
	Ball Valves		Pipe Code M-8	X	X	X	X			X	X	X	
	Expansion Joint		Pipe Code M-8	X	X	X	X			X	X	X	
	Gasket		Pipe Code M-4,-8,-42, Duct Code D-3			X	X						
	Protective Coating		2.2.3										

Project No. W-320-C5

Project Title Tank 241-C-106 Sluicing Pkg IV - C Tank Farm

Specification Section 15507

VENDOR INFORMATION LIST
("X" Indicates Required Data)

1	2	3	4	5 VENDOR INFORMATION (VI)											
									Instructions						
EPN IDENTIFICATION	DESCRIPTION	REFERENCE DRAWING	SPECIFICATION PARAGRAPH	Dimensional	Equipment	Specifications	Certified Test	Circuit or	Installation	Operation					
	Butterfly Valves/Actuator		Pipe Code M-8	X	X	X	X		X	X	X	X		X	~~MSDS~~
	Ball Valves		Pipe Code M-8	X	X	X	X		X	X	X	X		X	~~MSDS~~
	Expansion Joint		Pipe Code M-8	~~X~~	~~X~~	~~X~~	~~X~~		~~X~~	~~X~~	~~X~~	~~X~~		X	~~MSDS~~
	Gasket		Pipe Code M-4,-8,-42, Duct Code D-3			X									~~MSDS~~
	Protective Coating		2.2.3												~~MSDS~~

ICF KH 1985.00 (03/89) KEF037

APPENDIX A - IDENTIFICATION OF PIPING SYSTEMS

1. GENERAL

The identification of piping systems shall be in accordance with the American Standard Scheme for the Identification of Piping Systems, ANSI A13.1, as supplemented herein.

2. LOCATION

a. Except as provided below, identification shall be located adjacent to outlets, valves, flanges, unions, changes-in-direction, where pipes pass through walls, floors, or ceilings, and along an uninterrupted length of pipe at maximum intervals of 50 feet. Each line or branch in a room shall have at least one identification.

b. Where a number of outlets, valves, flanges, unions, or changes of direction make identification at each item impracticable, they may be spaced at approximate 6 foot intervals, preferably adjacent to valves.

c. Legend shall be located on the pipe so that it can be read easily from the operator's normal viewing position. Labels shall be placed on the readily visible lower quadrant of overhead pipes, and on an upper quadrant of pipes below normal eye level. Above ceilings, labels shall be placed in locations most readily visible from access positions.

3. LEGEND

a. Positive identification of a piping system content shall be by lettered legend giving the name of the content in full or abbreviated form. Legends may also be as specified on drawings or in other specifications.

b. Abbreviation of words in the legend may be used only where unavoidable due to space limitations.

c. The legend shall include the nominal operating pressure for steam, compressed air, and when specified, the pressure or temperature for other materials.

d. An arrow indicating the direction of flow shall be placed near the legend on pipes normally having a flow in one direction only. The color and size of the arrow shall be consistent with the color and size of the legend letters.

e. Legend shall be located on or adjacent to the classification color band.

4. APPROVED LABELS

a. Legend and color classification may be accomplished by the use of approved labels conforming to this Standard and which are suitable for the temperature of the surface to which they are to be applied. Approved labels include the following.

ALL-TEMPERATURE PIPE MARKERS
W. H. Brady Company
727 West Glendale Avenue
Milwaukee, Wisconsin 53201

TEL-A-PIPES
Westline Products Division
Thomas & Betts Company
220 South Rose Street
Los Angeles, California 90012

b. Single-word labels may be combined to form complete legends. Individual-letter labels shall not be so combined.

c. Labels shall be installed after painting is complete.

5. CLASSIFICATION COLOR

a. When use of classification colors is specified, they shall conform to Table 1.

Table 1

Classification	Band or Label Color	Legend/Arrow Color	Approximate Color No. (FED-STD-595)
Dangerous	Yellow	Black (17038)	13655 (yellow)
Safe	Green	Black (17038)	14260 (green)

b. Paint, if used, shall conform to FS TT-E-489, Class A, for synthetic gloss enamel.

c. Classification colors shall conform to Table 2.

Table 2. Classification Colors.

Material	Color
Ventilation (VT)	Yellow
Chill Water (CW)	Green

W320-28-032

Process Building Piping Stress Analysis

KAISER ENGINEERS HANFORD

CALCULATION IDENTIFICATION AND INDEX

Page i of ii

Date 2-23-95

W320-28-032

This sheet shows the status and description of the attached Design Analysis sheets.

Discipline 28- HVAC WO/Job No. ER4319/ W320 Calculation No. ~~W320-H-032~~ 28

Project No. & Name W320, Tank 241-C-106 Sluicing

Calculation Item Process Building Piping Stress Analysis

These calculations apply to:

Dwg. No. H-2-818480 Rev. No. 0

Dwg. No. Rev. No.

Other (Study, CDR)

Rev. No.

The status of these calculations is:

- ☐ Preliminary Calculations
- ☒ Final Calculations
- ☐ Check Calculations (On Calculation Dated)
- ☐ Void Calculation (Reason Voided)

Incorporated in Final Drawings? ☒ Yes ☐ No

This calculation verified by independent "check" calculations? ☐ Yes ☒ No

Original and Revised Calculation Approvals:

	Rev. 0 Signature/Date	Rev. 1 Signature/Date	Rev. 2 Signature/Date
Originator	Rodney C. Campbell 2-23-95		
Checked by	CD Jones ~~2/28/95~~ 3/1/95		
Approved by	CD Jones 3/1/95		
Checked Against Approved Vendor Data	Charles T. L. 4/16/98		

INDEX

Design Analysis Page No.	Description
i	Calculation Identification and Index
ii	Calculation Cross Index
1	Objective, Criteria, Given Data, Assumptions, Methods, References, Calculation
1	Conclusions
	Appendix A

KEH 0378.00 (06/92)

CALCULATION CROSS INDEX (Typical)

Subject Calculation No. W320-H-032

Page ii of ii

Subject Calculation Revision No.	Superceded by Calculation No.	These interfacing calculation/documents provide input to the subject calculation, and if revised may require revision of the subject calculation.		Results and conclusions of the subject calculation are used in these interfacing calculations and/or documents.		Does the output interface calculation/ documents require revision?		Has the output interface calculation/ documents been revised?		Discipline manager's signature and date indicating evaluation complete.
		Calculation/Document No.	Revision No.	Calculation/Document No.	Revision No.	Yes	No	Yes	No	
0		H-2-818480	0				✓		✓	↑
0		W320-H-003	0				✓		—	S.L. Evans 4/2/92
0		W320-H-018	0				✓		✓	↓

KEH 1975 00 (12/88)

Client WHC
Subject Process Building Piping Stress Analysis
Location: Tank 241-C-106

WO/Job No. ER4319/W320
Date 2-23-95 **By** Rodney C. Campbell
Checked **By**
Revised **By**

OBJECTIVE:

The objective of this calculation is to verify that the Process building HVAC piping meets ASME B31.3 code stress requirements.

CRITERIA:

1. Functional Design Criteria WHC-SD-W320-FDC-001, Rev. 2.
2. ASME B31.3-1993, Chemical Plant and Petroleum Refinery Piping
3. Standard Design Criteria 4.1, Rev. 12, Design Loads for Facilities.
4. DOE Order 6430.1A, General Design Criteria
5. W320-QAPP-001, Rev. 0, Project Specific Quality Assurance Plan.

GIVEN DATA:

Note: All the given data can be found in the criteria sources or references.

1. Ambient temperature: 50°F.
2. Maximum temperature: 180°F.
3. All ducting is safety class 3.
4. All ducting is made from ASTM A312, type 304L, schedule 40, stainless steel pipe.
5. The horizontal components of the acceleration due to an earthquake are 0.12.
6. The minimum corrosion allowance is .02 inches.
7. The pressure in the 8" duct is -23.4 inches of water and the pressure in the 6" line is -38.5 inches of water.

ASSUMPTIONS:

None

METHODS:

1. Autopipe+ Version 4.50

REFERENCES:

1. Drawing H-2-818480, Rev. ~~0~~ 1.
2. Tube Turn Weld-Neck Fittings.
3. Garlock Expansion Joints.
4. Keystone Super Seat Butterfly Valves.
5. W320-~~H~~28-003, Rev. 0
6. W320-~~H~~28-018, Rev. 0

CALCULATION:

The Process building HVAC piping was analyzed in three separate sections labeled W320H32A, W320H32B, and W320H32C. These three sections can be found on drawing H-2-818480. The Autopipe analysis for each section can be found in Appendix A.

CONCLUSIONS:

The three Process building HVAC piping sections analyzed meet the ASME B31.3 criteria.

APPENDIX A

```
**************************************************************
**                                                          **
**              AUTOPIPE SYSTEM DATA LISTING                **
**                                                          **
**************************************************************
```

SYSTEM NAME : W320H32A

PROJECT ID : PROCESS BUILDING PIPING STRESS ANALYSIS
W320, TANK 241-C-106 SLUICING, ER4319

PREPARED BY : _____
RC CAMPBELL

CHECKED BY : _____

PIPING CODE : B31.3

AMBIENT TEMP. (deg F) : 50.0

COMPONENT LIBRARY : AUTOPIPE

MATERIAL LIBRARY : AUTOB313

MODEL REVISION NUMBER : 38

POINT DATA LISTING

POINT NAME	TYPE	OFFSETS (ft) X	Y	Z	PIPE ID	DESCRIPTION
*** SEGMENT A						
A00	Flex	0	0	0	10SCED40	Wt= 35 lb , Ar= 97.6 sq.in Axial = 1200.0 Tors= RIGID Y-Shear= RIGID Bend= RIGID Z-Shear= RIGID Bend= RIGID
A01	Valv	0	0.67	0		Rating = 150, Weight = 65 lb Surface factor = 4.50, SIF = 1.00
A02	Run	0	0.21	0		
A03	Bend	0	1.33	0		Short Elbow, Radius = 10.00 inch Bend angle change = 90.00 deg Mid point at 50.00 percent SIF - In = 3.41, Out = 2.84
A04	Tee	1.29	0	0		
A05	Redu	0.46	0	0		
A06	Run	0.58	-0.09	-0.17	6SCHED40	
A07	Bend	0.75	0	0		Long Elbow, Radius = 9.00 inch Bend angle change = 90.00 deg SIF - In = 2.27, Out = 1.89
A08	Run	0	-0.94	0		
*** SEGMENT B						
A04	Tee	1.29	2.21	0	6SCHED40	
B01	Bend	0	-0.67	0.67		Long Elbow, Radius = 9.00 inch Bend angle change = 45.00 deg SIF - In = 2.27, Out = 1.89
B02	Run	0	0	0.31		
B03	Run	0	-0.02	0.71		
B04	Bend	0	-0.02	1.72		Long Elbow, Radius = 9.00 inch Bend angle change = 89.99 deg SIF - In = 2.27, Out = 1.89
B05	Run	2.62	-0.05	0		
B06	Tee	2.18	-0.06	0		
B07	Valv	0.47	-0.01	0		Rating = 150, Weight = 17 lb Surface factor = 4.30, SIF = 1.00
B08	Run	0.18	0	0		
B09	Bend	0.75	0	0		Long Elbow, Radius = 9.00 inch Bend angle change = 90.00 deg SIF - In = 2.27, Out = 1.89
B10	Bend	0	-1.82	0		Long Elbow, Radius = 9.00 inch Bend angle change = 90.00 deg SIF - In = 2.27, Out = 1.89

POINT DATA LISTING

POINT NAME	TYPE	OFFSETS (ft) X	Y	Z	PIPE ID	DESCRIPTION
B11	Bend	0.75	0	-0.75		Long Elbow, Radius = 9.00 inch Bend angle change = 45.00 deg SIF - In = 2.27, Out = 1.89
B12	Run	0	0	-0.57		
B13	Flex	0	0	-0.25		Wt= 35 lb , Ar= 40.6 sq.in Axial = 1360.0 Tors= RIGID Y-Shear= RIGID Bend= RIGID Z-Shear= RIGID Bend= RIGID
B14	Run	0	0	-0.50		
B15	Bend	0	0	-0.32		Long Elbow, Radius = 9.00 inch Bend angle change = 45.00 deg SIF - In = 2.27, Out = 1.89
B16	Run	-0.22	0	-0.22		
*** SEGMENT C						
B06	Tee	6.09	1.39	3.41	6SCHED40	
C01	Bend	0.51	0	-1.29		Short Elbow, Radius = 6.00 inch Bend angle change = 68.11 deg SIF - In = 2.97, Out = 2.47
C02	Valv	0.50	0.00	0.00		Rating = 150, Weight = 17 lb Surface factor = 4.30, SIF = 1.00
C03	Run	0.18	0	0		
C04	Run	0.02	0	0		
C05	Tee	0.45	0	0		
C06	Valv	0.45	0	0		Rating = 150, Weight = 17 lb Surface factor = 4.30, SIF = 1.00
C07	Run	0.18	0	0		
C08	Bend	1.15	0	0		Long Elbow, Radius = 9.00 inch Bend angle change = 90.00 deg SIF - In = 2.27, Out = 1.89
C09	Bend	0	-1.58	0		Long Elbow, Radius = 9.00 inch Bend angle change = 90.00 deg SIF - In = 2.27, Out = 1.89
C10	Run	0	0	0.78		
C11	Tee	0	0	0.44		
C12	Run	0	0	0.47		
*** SEGMENT D						
C11	Tee	9.52	-0.19	3.34	6SCHED40	
D01	Bend	0	3.42	0		Long Elbow, Radius = 9.00 inch Bend angle change = 90.00 deg

POINT DATA LISTING

POINT NAME	TYPE	OFFSETS (ft) X	Y	Z	PIPE ID	DESCRIPTION
						SIF - In = 2.27, Out = 1.89
D02	Run	0	0	-1.36		
D03	Flex	0	0	-2.10		Wt= 35 lb , Ar= 40.6 sq.in Axial = 1360.0 Tors= RIGID Y-Shear= RIGID Bend= RIGID Z-Shear= RIGID Bend= RIGID
D04	Run	0	0	-0.50		
D05	Bend	0	0	-1.00		Long Elbow, Radius = 9.00 inch Bend angle change = 90.00 deg SIF - In = 2.27, Out = 1.89
D06	Valv	0	-0.75	0		Rating = 150, Weight = 17 lb Surface factor = 4.30, SIF = 1.00
D07	Run	0	-0.18	0		
*** SEGMENT E						
C05	Tee	7.75	1.39	2.12	6SCHED40	
E01	Bend	0	0	-0.78		Short Elbow, Radius = 6.00 inch Bend angle change = 45.03 deg SIF - In = 2.97, Out = 2.47
E02	Bend	1.14	0	-1.14		Short Elbow, Radius = 6.00 inch Bend angle change = 44.97 deg SIF - In = 2.97, Out = 2.47
E03	Run	0.37	0	0		
E04	Tee	2.60	0	0		
*** SEGMENT F						
E04	Tee	11.85	1.39	0.20	6SCHED40	
F01	Valv	0	0	-0.47		Rating = 150, Weight = 17 lb Surface factor = 4.30, SIF = 1.00
F02	Run	0	0	-0.18		
F03	Run	0	0	-0.88		
F04	Bend	0	0	-1.00		Long Elbow, Radius = 9.00 inch Bend angle change = 90.00 deg SIF - In = 2.27, Out = 1.89
F05	Bend	0	2.57	0		Long Elbow, Radius = 9.00 inch Bend angle change = 90.00 deg SIF - In = 2.27, Out = 1.89
F06	Run	-1.17	0	0		
F07	Flex	-0.26	0	0		Wt= 35 lb , Ar= 40.6 sq.in Axial = 1360.0 Tors= RIGID

POINT DATA LISTING

POINT NAME	TYPE	-----OFFSETS (ft)----- X	Y	Z	PIPE ID	DESCRIPTION
						Y-Shear= RIGID Bend= RIGID Z-Shear= RIGID Bend= RIGID
F08	Run	-0.50	0	0		
F09	Bend	-0.17	0	0		Short Elbow, Radius = 6.00 inch Bend angle change = 29.88 deg SIF - In = 2.97, Out = 2.47
F10	Run	-0.17	0	0.10		
*** SEGMENT G						
E04	Tee	11.85	1.39	0.20	6SCHED40	
G01	Bend	0	0	0.97		Short Elbow, Radius = 6.00 inch Bend angle change = 90.00 deg SIF - In = 2.97, Out = 2.47
G02	Run	-0.75	0	0		
G03	Bend	-1.00	0	0		Long Elbow, Radius = 9.00 inch Bend angle change = 90.00 deg SIF - In = 2.27, Out = 1.89
G04	Flex	0	-1.45	0		Wt= 35 lb , Ar= 40.6 sq.in Axial = 1360.0 Tors= RIGID Y-Shear= RIGID Bend= RIGID Z-Shear= RIGID Bend= RIGID
G05	Run	0	-0.50	0		
G06	Bend	0	-0.50	0		Short Elbow, Radius = 6.00 inch Bend angle change = 90.00 deg SIF - In = 2.97, Out = 2.47
G07	Valv	0	0	-0.65		Rating = 150, Weight = 17 lb Surface factor = 4.30, SIF = 1.00
G08	Run	0	0	-0.18		

Total weight of empty pipes : 1083 lb

COMPONENT DATA LISTING

POINT NAME	---COORDINATE(ft)--- X	Y	Z	DATA TYPE	DESCRIPTION
*** SEGMENT A					
A00	0.00	0.00	0.00	ANCHOR	Rigid Thermal movements : None
A01	0.00	0.67	0.00		
A02	0.00	0.88	0.00	FLANGE	Weld neck SIF = 1.00 Rating = 150, Weight = 52 lb
A03 N	0.00	1.38	0.00		
A03	0.00	2.21	0.00	TI	
A03 M	0.24	1.97	0.00	Y-STOP	ID : A03 M1, Connected to Ground
A03 F	0.83	2.21	0.00		
A04	1.29	2.21	0.00	TEE	B16.9 welding tee SIF - In = 1.73, Out = 1.97
A05	1.75	2.21	0.00		
A06	2.33	2.12	-0.17		
A07 N	2.34	2.12	-0.17		
A07	3.08	2.12	-0.17	TI	
A07 F	3.08	1.37	-0.17		
A08	3.08	1.18	-0.17	ANCHOR	Rigid Thermal movements : None
				FLANGE	Weld neck SIF = 1.00 Rating = 150, Weight = 24 lb
*** SEGMENT B					
A04	1.29	2.21	0.00	TEE	B16.9 welding tee SIF - In = 1.73, Out = 1.97
B01 N	1.29	1.76	0.45		
B01	1.29	1.54	0.67	TI	
B01 F	1.29	1.54	0.98		
B02	1.29	1.54	0.98	FLANGE	Weld neck SIF = 1.00 Rating = 150, Weight = 24 lb
				FLANGE	Weld neck SIF = 1.00 Rating = 150, Weight = 24 lb
B03	1.29	1.52	1.69		
B04 N	1.29	1.51	2.66		
B04	1.29	1.50	3.41	TI	
B04 F	2.04	1.49	3.41		
B05	3.91	1.45	3.41	Y-STOP	ID : B05 1, Connected to Ground Gap-Below = 0.00, Above = 1.50 inch Friction = 0.00 Gaps set Weightless
B06	6.09	1.39	3.41	TEE	B16.9 welding tee SIF - In = 1.52, Out = 1.69
B07	6.56	1.38	3.41	FLANGE	Weld neck SIF = 1.00 Rating = 150, Weight = 24 lb
B08	6.74	1.38	3.41	FLANGE	Weld neck SIF = 1.00 Rating = 150, Weight = 24 lb
B09 N	6.74	1.38	3.41		
B09	7.49	1.38	3.41	TI	
B09 F	7.49	0.63	3.41		

COMPONENT DATA LISTING

POINT NAME	---COORDINATE(ft)--- X	Y	Z	DATA TYPE	DESCRIPTION
B10 N	7.49	0.31	3.41		
B10	7.49	-0.44	3.41	TI	
B10 F	8.02	-0.44	2.88		
B11 N	8.02	-0.44	2.88		
B11	8.24	-0.44	2.66	TI	
B11 F	8.24	-0.44	2.35		
B12	8.24	-0.44	2.09	Y-STOP	ID : B12 1, Connected to Ground
					Gap-Below = 0.00, Above = 1.50 inch
					Friction = 0.00
					Gaps set Weightless
B13	8.24	-0.44	1.84	FLANGE	Weld neck SIF = 1.00
					Non standard , Weight = 0 lb
B14	8.24	-0.44	1.34	FLANGE	Weld neck SIF = 1.00
					Rating = 150, Weight = 24 lb
B15 N	8.24	-0.44	1.33		
B15	8.24	-0.44	1.02	TI	
B15 F	8.02	-0.44	0.80		
B16	8.02	-0.44	0.80	ANCHOR	Rigid
					Thermal movements : None
				FLANGE	Weld neck SIF = 1.00
					Rating = 150, Weight = 24 lb
*** SEGMENT C					
B06	6.09	1.39	3.41	TEE	B16.9 welding tee
					SIF - In = 1.52, Out = 1.69
C01 N	6.48	1.39	2.43		
C01	6.60	1.39	2.12	TI	
C01 F	6.94	1.39	2.12		
C02	7.10	1.39	2.12	FLANGE	Weld neck SIF = 1.00
					Non standard , Weight = 0 lb
C03	7.28	1.39	2.12	FLANGE	Weld neck SIF = 1.00
					Non standard , Weight = 0 lb
C04	7.30	1.39	2.12		
C05	7.75	1.39	2.12	TEE	B16.9 welding tee
					SIF - In = 1.52, Out = 1.69
C06	8.19	1.39	2.12	FLANGE	Weld neck SIF = 1.00
					Rating = 150, Weight = 24 lb
C07	8.37	1.39	2.12	FLANGE	Weld neck SIF = 1.00
					Rating = 150, Weight = 24 lb
C08 N	8.77	1.39	2.12		
C08	9.52	1.39	2.12	TI	
C08 F	9.52	0.64	2.12		
C09 N	9.52	0.56	2.12		
C09	9.52	-0.19	2.12	TI	
C09 F	9.52	-0.19	2.87		
C10	9.52	-0.19	2.90		
C11	9.52	-0.19	3.34	TEE	B16.9 welding tee
					SIF - In = 1.52, Out = 1.69
C12	9.52	-0.19	3.82	ANCHOR	Rigid

COMPONENT DATA LISTING

POINT NAME	---COORDINATE(ft)--- X	Y	Z	DATA TYPE	DESCRIPTION
					Thermal movements : None
				FLANGE	Weld neck SIF = 1.00
					Rating = 150, Weight = 24 lb
*** SEGMENT D					
C11	9.52	-0.19	3.34	TEE	B16.9 welding tee
					SIF - In = 1.52, Out = 1.69
D01 N	9.52	2.48	3.34		
D01	9.52	3.23	3.34	TI	
D01 F	9.52	3.23	2.59		
D02	9.52	3.23	1.98	Y-STOP	ID : D02 1, Connected to Ground
					Gap-Below = 0.00, Above = 1.50 inch
					Friction = 0.00
					Gaps set Weightless
D03	9.52	3.23	-0.13	FLANGE	Weld neck SIF = 1.00
					Rating = 150, Weight = 24 lb
D04	9.52	3.23	-0.63	FLANGE	Weld neck SIF = 1.00
					Rating = 150, Weight = 24 lb
D05 N	9.52	3.23	-0.88		
D05	9.52	3.23	-1.63	TI	
D05 F	9.52	2.48	-1.63		
D06	9.52	2.48	-1.63	FLANGE	Weld neck SIF = 1.00
					Rating = 150, Weight = 24 lb
D07	9.52	2.30	-1.63	ANCHOR	Rigid
					Thermal movements : None
*** SEGMENT E					
C05	7.75	1.39	2.12	TEE	B16.9 welding tee
					SIF - In = 1.52, Out = 1.69
E01 N	7.75	1.39	1.54		
E01	7.75	1.39	1.33	TI	
E01 F	7.89	1.39	1.19		
E02 N	8.74	1.39	0.34		
E02	8.89	1.39	0.20	TI	
E02 F	9.09	1.39	0.20		
E03	9.25	1.39	0.20		
E04	11.85	1.39	0.20	TEE	B16.9 welding tee
					SIF - In = 1.52, Out = 1.69
*** SEGMENT F					
E04	11.85	1.39	0.20	TEE	B16.9 welding tee
					SIF - In = 1.52, Out = 1.69
F01	11.85	1.39	-0.27	FLANGE	Weld neck SIF = 1.00
					Rating = 150, Weight = 24 lb
F02	11.85	1.39	-0.45	FLANGE	Weld neck SIF = 1.00
					Rating = 150, Weight = 24 lb
F03	11.85	1.39	-1.33		
F04 N	11.85	1.39	-1.59		
F04	11.85	1.39	-2.34	TI	

COMPONENT DATA LISTING

POINT NAME	COORDINATE(ft) X	Y	Z	DATA TYPE	DESCRIPTION
F04 F	11.85	2.14	-2.34		
F05 N	11.85	3.21	-2.34		
F05	11.85	3.96	-2.34	TI	
F05 F	11.10	3.96	-2.34		
F06	10.68	3.96	-2.34	Y-STOP	ID : F06 1, Connected to Ground Gap-Below = 0.00, Above = 1.50 inch Friction = 0.00 Gaps set Weightless
F07	10.42	3.96	-2.34	FLANGE	Weld neck SIF = 1.00 Rating = 150, Weight = 24 lb
F08	9.92	3.96	-2.34		
F09 N	9.89	3.96	-2.34		
F09	9.75	3.96	-2.34	TI	
F09 F	9.64	3.96	-2.27		
F10	9.58	3.96	-2.24	ANCHOR	Rigid Thermal movements : None
				FLANGE	Weld neck SIF = 1.00 Rating = 150, Weight = 24 lb
*** SEGMENT G					
E04	11.85	1.39	0.20	TEE	B16.9 welding tee SIF - In = 1.52, Out = 1.69
G01 N	11.85	1.39	0.67		
G01	11.85	1.39	1.17	TI	
G01 F	11.35	1.39	1.17		
G02	11.10	1.39	1.17	Y-STOP	ID : G02 1, Connected to Ground Gap-Below = 0.00, Above = 1.50 inch Friction = 0.00 Gaps set Weightless
G03 N	10.85	1.39	1.17		
G03	10.10	1.39	1.17	TI	
G03 F	10.10	0.64	1.17		
G04	10.10	-0.06	1.17	FLANGE	Weld neck SIF = 1.00 Rating = 150, Weight = 24 lb
G05	10.10	-0.56	1.17	FLANGE	Weld neck SIF = 1.00 Rating = 150, Weight = 24 lb
G06 N	10.10	-0.56	1.17		
G06	10.10	-1.06	1.17	TI	
G06 F	10.10	-1.06	0.67		
G07	10.10	-1.06	0.52	FLANGE	Weld neck SIF = 1.00 Rating = 150, Weight = 24 lb
G08	10.10	-1.06	0.34	ANCHOR	Rigid Thermal movements : None
				FLANGE	Weld neck SIF = 1.00 Rating = 150, Weight = 24 lb

Number of points in the system : 115

PIPE DATA LISTING

Pipe ID/ Material	Nom/ Sch	O.D. inch	Thickness(inch) W.Th.	Corr	Mill	Insu	Ling	Spec Grav	Weight(lb/ft) Pipe	Other	Total
10SCED40 A312-TP304L	10 40S	10.750	0.365	0.02	0.05	1.50	0.02	0	41.43	3.02	44.45
6SCHED40 A312-TP304L	6 40S	6.625	0.280	0.02	0.04	1.50	0.02	0	19.42	2.06	21.48

M A T E R I A L D A T A L I S T I N G

Material Name	Pipe ID	Density lb/cu.ft	Pois. Ratio	Temper. deg F	Modulus E6 psi	Expans. in/100ft	Allow. psi
A312-TP304L	10SCED40	501.0	0.30	50.0	28.38		16700.0
				180.0		1.4413	16700.0
A312-TP304L	6SCHED40	501.0	0.30	50.0	28.38		16700.0
				180.0		1.4413	16700.0

TEMPERATURE AND PRESSURE DATA

POINT NAME	CASE 1 PRESS. psi	CASE 1 TEMPER deg F	CASE 1 EXPAN. in/100ft	CASE 2 PRESS. psi	CASE 2 TEMPER deg F	CASE 2 EXPAN. in/100ft	CASE 3 PRESS. psi	CASE 3 TEMPER deg F	CASE 3 EXPAN. in/100ft
*** SEGMENT A									
A00	-0.62	180	1.441						
A08	-0.62	180	1.441						
*** SEGMENT B									
A04	-0.62	180	1.441						
B16	-0.62	180	1.441						
*** SEGMENT C									
B06	-0.62	180	1.441						
C12	-0.62	180	1.441						
*** SEGMENT D									
C11	-0.62	180	1.441						
D07	-0.62	180	1.441						
*** SEGMENT E									
C05	-0.62	180	1.441						
E04	-0.62	180	1.441						
*** SEGMENT F									
E04	-0.62	180	1.441						
F10	-0.62	180	1.441						
*** SEGMENT G									
E04	-0.62	180	1.441						
G08	-0.62	180	1.441						

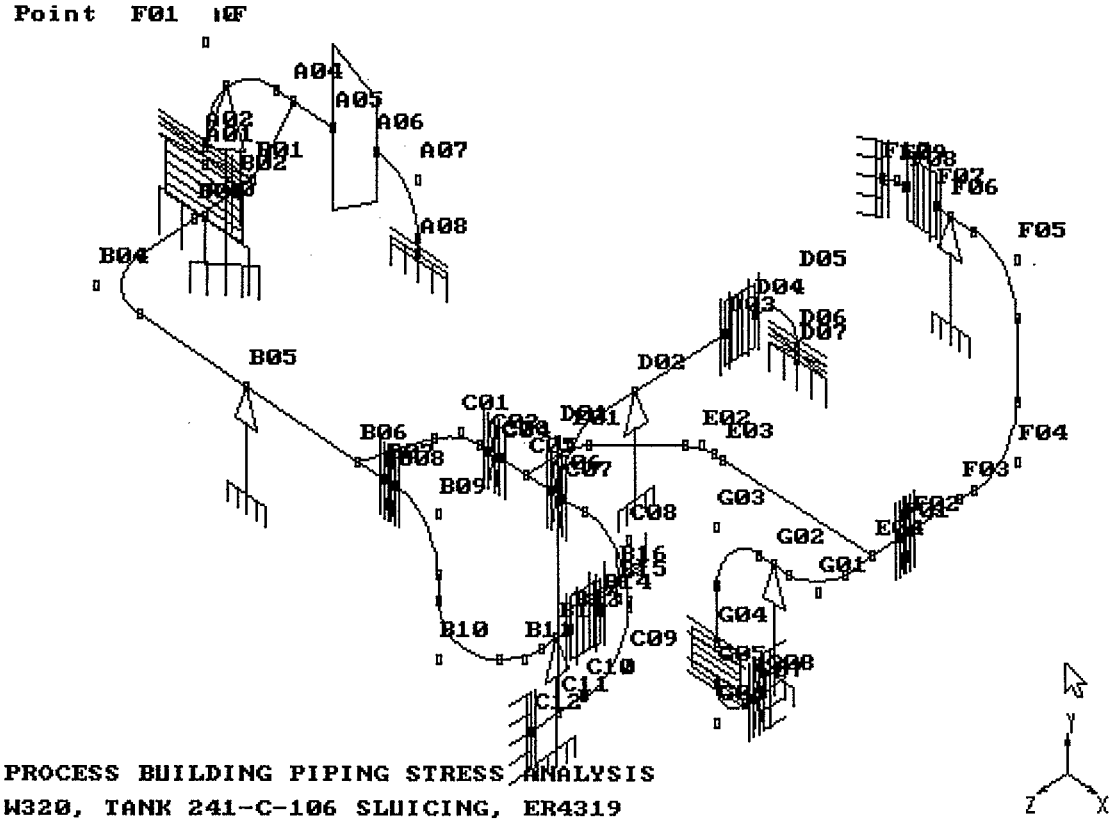

PROCESS BUILDING PIPING STRESS ANALYSIS
W320, TANK 241-C-106 SLUICING, ER4319

A N A L Y S I S S U M M A R Y

Current model revision number : 38

```
Static - Date and Time of analysis ............. Mar 1, 1995   7:52 AM
         Model Revision Number .................. 38
         Number of load cases ................... 4
         Load cases analyzed .................... GR T1 E1 E2
         Gaps/Friction/Yielding considered ..... Yes
         Tolerance - Force, Displacement ....... 100.00 lb   0.0162 in
         Friction - Factor, tolerance .......... 1.00   0.10
         Hanger design run ...................... No
         Cut short included ..................... No
         Occasional load analysis type ......... Nonlinear
         Non-linear analysis summary file ...... W320H32A.LOG
         Base load cases for nonlinear analysis
                                                  GR = None
                                                  T1 = GR
                                                  E1 = GR
                                                  E2 = GR
         Weight of contents included ........... Yes
         Pressure stiffening case ............... 0
         Water elevation for buoyancy loads .... Not considered
```


CODE COMPLIANCE COMBINATIONS

Combination	Category	Method	Load	Factor	Allowable	Remarks
GR + Max P	Sustain	Sum	Gravity	1.00	Automatic	Default
			Max Long	1.00		
Cold to T1	Expansion	Sum	Thermal 1	1.00	Automatic	Default
Sus. + E1	Occasion	Abs sum	Earth 1	1.00	Automatic	Default
			Max Sus	1.00		
Sus. + E2	Occasion	Abs sum	Earth 2	1.00	Automatic	Default
			Max Sus	1.00		
Max P	Hoop		Max Hoop	1.00	Automatic	Default
SEIS	Occasion	SRSS	Earth 1	1.00	Automatic	User
			Earth 2	1.00		
SUS+SEIS	Occasion	Abs sum	Max Sus	1.00	Automatic	User
			SEIS	1.00		

OTHER USER COMBINATIONS

Combination	Method	Load	Factor	Remarks
GR	Sum	Gravity	1.00	Default
T1	Sum	Thermal 1	1.00	Default
E1	Sum	Earth 1	1.00	Default
E2	Sum	Earth 2	1.00	Default
GR+T1	Sum	Gravity	1.00	User
		Thermal 1	1.00	
SEIS	Abs sum	Earth 1	1.00	User
		Earth 2	1.00	
GR+T1+SEIS	Abs sum	GR+T1	1.00	User
		SEIS	1.00	

CODE COMPLIANCE

```
Y - Factor ............................ 0.40
Weld efficiency factor ................ 1.00
Range reduction factor ................ 1.00
```

```
Design Pressure Factor ................ 1.00
Minimum stress ratio used in reports... 0.00
Include corrosion in stress calcs. .... Y
Include torsion in code stress ........ N
Include axial force in code stress .... N
Longitudinal pressure calculation ..... PD/4t
Include rigorous pressure ............. Not analyzed
```



```
EARTHQUAKE LOAD CASES :
-----------------------

Number of load cases analysed :  2

Load case 1  -  E1

    X-Multiplier=  0.120    Y-Multiplier=  0.000    Z-Multiplier=  0.000

Load case 2  -  E2

    X-Multiplier=  0.000    Y-Multiplier=  0.000    Z-Multiplier=  0.120
```

D I S P L A C E M E N T S

Point name	Load combination	TRANSLATIONS (in) X	Y	Z	ROTATIONS (deg) X	Y	Z
*** Segment A begin ***							
A00	GR	0.000	0.000	0.000	0.000	0.000	0.000
	T1	0.000	0.000	0.000	0.000	0.000	0.000
	E1	0.000	0.000	0.000	0.000	0.000	0.000
	E2	0.000	0.000	0.000	0.000	0.000	0.000
	GR+T1	0.000	0.000	0.000	0.000	0.000	0.000
	SEIS	0.000	0.000	0.000	0.000	0.000	0.000
	GR+T1+SEIS	0.000	0.000	0.000	0.000	0.000	0.000
A01	GR	0.000	0.000	0.000	0.000	0.000	0.000
	T1	0.000	-0.024	0.000	0.000	0.000	0.000
	E1	0.000	0.000	0.000	0.000	0.000	0.000
	E2	0.000	0.000	0.000	0.000	0.000	0.000
	GR+T1	0.000	-0.024	0.000	0.000	0.000	0.000
	SEIS	0.000	0.000	0.000	0.000	0.000	0.000
	GR+T1+SEIS	0.000	0.024	0.000	0.000	0.000	0.000
A02	GR	0.000	0.000	0.000	0.000	0.000	0.000
	T1	0.000	-0.021	0.000	0.000	0.000	0.000
	E1	0.000	0.000	0.000	0.000	0.000	0.000
	E2	0.000	0.000	0.000	0.000	0.000	0.000
	GR+T1	0.000	-0.021	0.000	0.000	0.000	0.000
	SEIS	0.000	0.000	0.000	0.000	0.000	0.000
	GR+T1+SEIS	0.000	0.021	0.000	0.000	0.000	0.000
A03 N	GR	0.000	0.000	0.000	0.000	0.000	0.000
	T1	-0.003	-0.014	0.000	0.000	-0.001	0.017
	E1	0.000	0.000	0.000	0.000	0.000	0.000
	E2	0.000	0.000	0.000	0.000	0.000	0.000
	GR+T1	-0.003	-0.014	0.000	0.000	-0.001	0.017
	SEIS	0.000	0.000	0.000	0.000	0.000	0.000
	GR+T1+SEIS	0.003	0.014	0.000	0.000	0.001	0.017
A03 M	GR	0.000	0.000	0.000	0.000	0.000	0.000
	T1	-0.011	0.000	0.000	0.002	-0.003	0.107
	E1	0.000	0.000	0.000	0.000	0.000	0.000
	E2	0.000	0.000	0.000	0.000	0.000	0.000
	GR+T1	-0.011	0.000	0.000	0.003	-0.003	0.107
	SEIS	0.000	0.000	0.000	0.000	0.000	0.000
	GR+T1+SEIS	0.011	0.000	0.000	0.003	0.003	0.107

D I S P L A C E M E N T S

Point name	Load combination	TRANSLATIONS (in) X	Y	Z	ROTATIONS (deg) X	Y	Z
A03 F	GR	0.000	0.000	0.000	0.001	0.000	0.000
	T1	-0.008	0.015	0.001	0.005	-0.011	0.054
	E1	0.000	0.000	0.000	0.000	0.000	0.000
	E2	0.000	0.000	0.000	0.000	0.000	0.000
	GR+T1	-0.008	0.015	0.001	0.006	-0.011	0.054
	SEIS	0.000	0.000	0.000	0.000	0.000	0.000
	GR+T1+SEIS	0.008	0.015	0.001	0.006	0.011	0.054
A04	GR	0.000	0.000	0.000	0.001	0.000	0.000
	T1	-0.002	0.020	0.002	0.005	-0.011	0.049
	E1	0.000	0.000	0.000	0.000	0.000	0.000
	E2	0.000	0.000	0.000	0.000	0.000	0.000
	GR+T1	-0.002	0.020	0.002	0.006	-0.011	0.049
	SEIS	0.000	0.000	0.000	0.000	0.000	0.000
	GR+T1+SEIS	0.002	0.020	0.002	0.006	0.012	0.049
A05	GR	0.000	0.000	0.000	0.001	0.000	0.000
	T1	0.004	0.025	0.003	0.006	-0.008	0.044
	E1	0.000	0.000	0.000	0.000	0.000	0.000
	E2	0.000	0.000	0.000	0.000	0.000	0.000
	GR+T1	0.004	0.025	0.003	0.006	-0.008	0.044
	SEIS	0.000	0.000	0.000	0.000	0.000	0.000
	GR+T1+SEIS	0.004	0.025	0.003	0.006	0.009	0.044
A06	GR	0.000	0.000	0.000	0.001	0.000	0.000
	T1	0.013	0.028	0.000	0.006	-0.004	0.031
	E1	0.000	0.000	0.000	0.000	0.000	0.000
	E2	0.000	0.000	0.000	0.000	0.000	0.000
	GR+T1	0.013	0.028	0.001	0.007	-0.004	0.031
	SEIS	0.000	0.000	0.000	0.000	0.000	0.000
	GR+T1+SEIS	0.013	0.028	0.001	0.007	0.004	0.031
A07 N	GR	0.000	0.000	0.000	0.001	0.000	0.000
	T1	0.013	0.028	0.000	0.006	-0.004	0.030
	E1	0.000	0.000	0.000	0.000	0.000	0.000
	E2	0.000	0.000	0.000	0.000	0.000	0.000
	GR+T1	0.013	0.028	0.001	0.007	-0.004	0.030
	SEIS	0.000	0.000	0.000	0.000	0.000	0.000
	GR+T1+SEIS	0.013	0.028	0.001	0.007	0.004	0.030
A07 F	GR	0.000	0.000	0.000	0.000	0.000	0.000
	T1	0.002	0.003	0.000	0.000	0.000	-0.020
	E1	0.000	0.000	0.000	0.000	0.000	0.000
	E2	0.000	0.000	0.000	0.000	0.000	0.000
	GR+T1	0.002	0.003	0.000	0.000	0.000	-0.020
	SEIS	0.000	0.000	0.000	0.000	0.000	0.000
	GR+T1+SEIS	0.002	0.003	0.000	0.000	0.000	0.020

D I S P L A C E M E N T S

Point name	Load combination	TRANSLATIONS (in) X	Y	Z	ROTATIONS (deg) X	Y	Z
A08	GR	0.000	0.000	0.000	0.000	0.000	0.000
	T1	0.000	0.000	0.000	0.000	0.000	0.000
	E1	0.000	0.000	0.000	0.000	0.000	0.000
	E2	0.000	0.000	0.000	0.000	0.000	0.000
	GR+T1	0.000	0.000	0.000	0.000	0.000	0.000
	SEIS	0.000	0.000	0.000	0.000	0.000	0.000
	GR+T1+SEIS	0.000	0.000	0.000	0.000	0.000	0.000

*** Segment A end ***

*** Segment B begin ***

A04	GR	0.000	0.000	0.000	0.001	0.000	0.000
	T1	-0.002	0.020	0.002	0.005	-0.011	0.049
	E1	0.000	0.000	0.000	0.000	0.000	0.000
	E2	0.000	0.000	0.000	0.000	0.000	0.000
	GR+T1	-0.002	0.020	0.002	0.006	-0.011	0.049
	SEIS	0.000	0.000	0.000	0.000	0.000	0.000
	GR+T1+SEIS	0.002	0.020	0.002	0.006	0.012	0.049
B01 N	GR	0.000	0.000	0.000	0.001	0.000	0.000
	T1	-0.001	0.013	0.008	0.006	-0.040	0.047
	E1	0.000	0.000	0.000	0.000	0.000	0.000
	E2	0.000	0.000	0.000	0.000	0.000	0.000
	GR+T1	-0.001	0.013	0.008	0.006	-0.040	0.047
	SEIS	0.000	0.000	0.000	0.000	0.000	0.000
	GR+T1+SEIS	0.001	0.013	0.008	0.006	0.041	0.047
B01 F	GR	0.000	0.000	0.000	0.000	-0.001	0.000
	T1	-0.010	0.009	0.015	0.006	-0.142	0.014
	E1	0.000	0.000	0.000	0.000	0.001	0.000
	E2	0.000	0.000	0.000	0.000	0.000	0.000
	GR+T1	-0.010	0.009	0.015	0.006	-0.143	0.013
	SEIS	0.000	0.000	0.000	0.000	0.002	0.000
	GR+T1+SEIS	0.010	0.009	0.015	0.006	0.145	0.014
B02	GR	0.000	0.000	0.000	0.000	-0.001	0.000
	T1	-0.010	0.009	0.015	0.006	-0.142	0.014
	E1	0.000	0.000	0.000	0.000	0.001	0.000
	E2	0.000	0.000	0.000	0.000	0.000	0.000
	GR+T1	-0.010	0.009	0.015	0.006	-0.143	0.013
	SEIS	0.000	0.000	0.000	0.000	0.002	0.000
	GR+T1+SEIS	0.010	0.009	0.015	0.006	0.145	0.014

D I S P L A C E M E N T S

Point name	Load combination	TRANSLATIONS (in) X	Y	Z	ROTATIONS (deg) X	Y	Z
B03	GR	0.000	0.000	0.000	0.000	-0.001	0.000
	T1	-0.033	0.008	0.026	0.006	-0.155	0.014
	E1	0.000	0.000	0.000	0.000	0.001	0.000
	E2	0.000	0.000	0.000	0.000	0.000	0.000
	GR+T1	-0.033	0.008	0.026	0.005	-0.156	0.014
	SEIS	0.000	0.000	0.000	0.000	0.002	0.000
	GR+T1+SEIS	0.033	0.008	0.026	0.006	0.157	0.014
B04 N	GR	0.000	0.000	0.000	-0.001	-0.001	0.000
	T1	-0.065	0.007	0.040	0.006	-0.156	0.015
	E1	0.001	0.000	0.000	0.000	0.001	0.000
	E2	0.000	0.000	0.000	0.000	-0.001	0.000
	GR+T1	-0.066	0.007	0.040	0.006	-0.156	0.015
	SEIS	0.001	0.000	0.000	0.000	0.002	0.000
	GR+T1+SEIS	0.067	0.007	0.040	0.006	0.158	0.015
B04 F	GR	0.000	0.000	0.000	-0.002	0.001	0.000
	T1	-0.073	0.008	0.062	0.012	-0.014	0.019
	E1	0.001	0.000	0.000	0.000	0.001	0.000
	E2	0.000	0.000	0.000	0.000	-0.002	0.000
	GR+T1	-0.073	0.008	0.062	0.010	-0.013	0.019
	SEIS	0.001	0.000	0.000	0.001	0.003	0.000
	GR+T1+SEIS	0.075	0.008	0.063	0.011	0.016	0.019
B05	GR	0.000	0.000	0.000	-0.003	0.001	-0.001
	T1	-0.046	0.015	0.059	0.016	0.026	0.020
	E1	0.001	0.000	-0.001	0.000	0.001	0.000
	E2	0.000	0.000	0.001	0.000	-0.001	0.000
	GR+T1	-0.047	0.015	0.059	0.013	0.027	0.019
	SEIS	0.001	0.000	0.001	0.001	0.002	0.000
	GR+T1+SEIS	0.048	0.015	0.060	0.014	0.029	0.019
B06	GR	0.000	-0.001	-0.001	-0.004	0.001	-0.001
	T1	-0.015	0.023	0.038	0.020	0.066	0.016
	E1	0.001	0.000	-0.001	0.000	0.001	0.000
	E2	0.000	0.000	0.001	0.000	-0.001	0.000
	GR+T1	-0.015	0.022	0.037	0.016	0.067	0.014
	SEIS	0.001	0.000	0.002	0.001	0.002	0.000
	GR+T1+SEIS	0.017	0.022	0.039	0.017	0.068	0.014
B07	GR	0.000	-0.001	-0.001	-0.004	0.001	-0.001
	T1	-0.008	0.024	0.031	0.019	0.064	0.014
	E1	0.001	0.000	-0.001	0.000	0.001	0.000
	E2	0.000	0.000	0.002	0.000	-0.001	0.000
	GR+T1	-0.009	0.023	0.031	0.015	0.065	0.013
	SEIS	0.001	0.000	0.002	0.001	0.002	0.000
	GR+T1+SEIS	0.010	0.023	0.033	0.016	0.067	0.014

D I S P L A C E M E N T S

Point name	Load combination	TRANSLATIONS (in) X	Y	Z	ROTATIONS (deg) X	Y	Z
B08	GR	0.000	-0.001	-0.001	-0.004	0.001	-0.001
	T1	-0.005	0.025	0.029	0.019	0.064	0.014
	E1	0.001	0.000	-0.001	0.000	0.001	0.000
	E2	0.000	0.000	0.002	0.000	-0.001	0.000
	GR+T1	-0.006	0.024	0.028	0.015	0.065	0.013
	SEIS	0.001	0.000	0.003	0.001	0.002	0.000
	GR+T1+SEIS	0.007	0.024	0.031	0.016	0.066	0.014
B09 N	GR	0.000	-0.001	-0.001	-0.004	0.001	-0.001
	T1	-0.005	0.025	0.029	0.019	0.064	0.014
	E1	0.001	0.000	-0.001	0.000	0.001	0.000
	E2	0.000	0.000	0.002	0.000	-0.001	0.000
	GR+T1	-0.006	0.024	0.028	0.015	0.065	0.013
	SEIS	0.001	0.000	0.003	0.001	0.002	0.000
	GR+T1+SEIS	0.007	0.024	0.031	0.016	0.066	0.014
B09 F	GR	0.000	-0.001	0.000	-0.001	0.001	0.002
	T1	0.006	0.015	0.018	0.007	0.048	-0.002
	E1	0.001	0.000	-0.001	0.000	0.001	-0.001
	E2	0.000	0.000	0.002	0.000	-0.001	0.000
	GR+T1	0.006	0.014	0.018	0.007	0.049	0.001
	SEIS	0.001	0.000	0.003	0.000	0.002	0.001
	GR+T1+SEIS	0.007	0.014	0.021	0.007	0.051	0.001
B10 N	GR	0.000	-0.001	0.000	0.000	0.001	0.002
	T1	0.006	0.011	0.018	0.007	0.047	-0.002
	E1	0.001	0.000	-0.001	0.000	0.001	-0.001
	E2	0.000	0.000	0.002	0.000	-0.001	0.000
	GR+T1	0.006	0.010	0.017	0.007	0.048	0.000
	SEIS	0.001	0.000	0.003	0.000	0.002	0.001
	GR+T1+SEIS	0.007	0.010	0.020	0.007	0.050	0.001
B10 F	GR	0.000	0.000	-0.001	0.003	0.001	0.003
	T1	0.008	0.000	0.005	0.001	0.034	0.000
	E1	0.001	0.000	-0.001	0.000	0.001	0.000
	E2	0.000	0.000	0.002	0.000	-0.001	0.000
	GR+T1	0.009	0.000	0.004	0.003	0.035	0.002
	SEIS	0.001	0.000	0.003	0.000	0.002	0.000
	GR+T1+SEIS	0.009	0.000	0.007	0.003	0.037	0.003
B11 N	GR	0.000	0.000	-0.001	0.003	0.001	0.003
	T1	0.008	0.000	0.005	0.001	0.034	0.000
	E1	0.001	0.000	-0.001	0.000	0.001	0.000
	E2	0.000	0.000	0.002	0.000	-0.001	0.000
	GR+T1	0.009	0.000	0.004	0.003	0.035	0.002
	SEIS	0.001	0.000	0.003	0.000	0.002	0.000
	GR+T1+SEIS	0.009	0.000	0.007	0.003	0.037	0.003

D I S P L A C E M E N T S

Point name	Load combination	TRANSLATIONS (in) X	Y	Z	ROTATIONS (deg) X	Y	Z
B11 F	GR	0.000	0.000	-0.001	0.001	0.001	0.001
	T1	0.009	0.000	-0.004	0.000	0.021	0.000
	E1	0.000	0.000	-0.001	0.000	0.001	0.000
	E2	0.000	0.000	0.002	0.000	0.000	0.000
	GR+T1	0.009	0.000	-0.005	0.001	0.022	0.001
	SEIS	0.000	0.000	0.003	0.000	0.002	0.000
	GR+T1+SEIS	0.009	0.000	0.008	0.001	0.024	0.002
B12	GR	0.000	0.000	-0.001	0.000	0.001	0.001
	T1	0.007	0.000	-0.008	0.000	0.020	0.000
	E1	0.000	0.000	-0.001	0.000	0.001	0.000
	E2	0.000	0.000	0.002	0.000	0.000	0.000
	GR+T1	0.008	0.000	-0.009	0.001	0.021	0.001
	SEIS	0.000	0.000	0.003	0.000	0.002	0.000
	GR+T1+SEIS	0.008	0.000	0.012	0.001	0.023	0.001
B13	GR	0.000	0.000	-0.001	0.000	0.001	0.001
	T1	0.006	0.000	-0.011	0.000	0.019	0.000
	E1	0.000	0.000	-0.001	0.000	0.001	0.000
	E2	0.000	0.000	0.002	0.000	0.000	0.000
	GR+T1	0.006	0.000	-0.012	0.000	0.020	0.001
	SEIS	0.000	0.000	0.003	0.000	0.002	0.000
	GR+T1+SEIS	0.007	0.000	0.016	0.000	0.022	0.001
B14	GR	0.000	0.000	0.000	0.000	0.001	0.001
	T1	0.004	0.000	0.007	0.000	0.019	0.000
	E1	0.000	0.000	0.000	0.000	0.001	0.000
	E2	0.000	0.000	0.000	0.000	0.000	0.000
	GR+T1	0.004	0.000	0.007	0.000	0.020	0.001
	SEIS	0.000	0.000	0.000	0.000	0.002	0.000
	GR+T1+SEIS	0.005	0.000	0.007	0.000	0.022	0.001
B15 N	GR	0.000	0.000	0.000	0.000	0.001	0.001
	T1	0.004	0.000	0.007	0.000	0.019	0.000
	E1	0.000	0.000	0.000	0.000	0.001	0.000
	E2	0.000	0.000	0.000	0.000	0.000	0.000
	GR+T1	0.004	0.000	0.007	0.000	0.020	0.001
	SEIS	0.000	0.000	0.000	0.000	0.002	0.000
	GR+T1+SEIS	0.004	0.000	0.007	0.000	0.021	0.001
B15 F	GR	0.000	0.000	0.000	0.000	0.000	0.000
	T1	0.000	0.000	0.000	0.000	0.000	0.000
	E1	0.000	0.000	0.000	0.000	0.000	0.000
	E2	0.000	0.000	0.000	0.000	0.000	0.000
	GR+T1	0.000	0.000	0.000	0.000	0.000	0.000
	SEIS	0.000	0.000	0.000	0.000	0.000	0.000
	GR+T1+SEIS	0.000	0.000	0.000	0.000	0.000	0.000

D I S P L A C E M E N T S

Point name	Load combination	TRANSLATIONS (in) X	Y	Z	ROTATIONS (deg) X	Y	Z
B16	GR	0.000	0.000	0.000	0.000	0.000	0.000
	T1	0.000	0.000	0.000	0.000	0.000	0.000
	E1	0.000	0.000	0.000	0.000	0.000	0.000
	E2	0.000	0.000	0.000	0.000	0.000	0.000
	GR+T1	0.000	0.000	0.000	0.000	0.000	0.000
	SEIS	0.000	0.000	0.000	0.000	0.000	0.000
	GR+T1+SEIS	0.000	0.000	0.000	0.000	0.000	0.000

*** Segment B end ***

*** Segment C begin ***

B06	GR	0.000	-0.001	-0.001	-0.004	0.001	-0.001
	T1	-0.015	0.023	0.038	0.020	0.066	0.016
	E1	0.001	0.000	-0.001	0.000	0.001	0.000
	E2	0.000	0.000	0.001	0.000	-0.001	0.000
	GR+T1	-0.015	0.022	0.037	0.016	0.067	0.014
	SEIS	0.001	0.000	0.002	0.001	0.002	0.000
	GR+T1+SEIS	0.017	0.022	0.039	0.017	0.068	0.014
C01 N	GR	-0.001	-0.002	-0.001	-0.005	0.001	-0.001
	T1	-0.025	0.029	0.017	0.022	0.077	0.012
	E1	0.001	0.000	-0.001	0.000	0.000	0.000
	E2	0.000	0.000	0.001	0.001	-0.001	0.000
	GR+T1	-0.026	0.027	0.017	0.017	0.077	0.011
	SEIS	0.001	0.000	0.002	0.001	0.001	0.000
	GR+T1+SEIS	0.026	0.027	0.019	0.019	0.078	0.011
C01 F	GR	-0.001	-0.002	-0.001	-0.004	0.001	0.002
	T1	-0.023	0.030	0.006	0.015	0.055	-0.005
	E1	0.001	0.000	-0.001	0.000	-0.001	0.000
	E2	0.000	0.000	0.001	0.001	0.001	0.000
	GR+T1	-0.024	0.028	0.005	0.011	0.055	-0.003
	SEIS	0.001	0.000	0.002	0.001	0.002	0.000
	GR+T1+SEIS	0.025	0.028	0.008	0.012	0.058	0.004
C02	GR	-0.001	-0.002	-0.001	-0.004	0.001	0.002
	T1	-0.021	0.030	0.004	0.015	0.053	-0.006
	E1	0.001	0.000	-0.001	0.000	-0.001	0.000
	E2	0.000	0.000	0.001	0.001	0.001	0.000
	GR+T1	-0.022	0.028	0.003	0.011	0.054	-0.004
	SEIS	0.001	0.000	0.002	0.001	0.003	0.000
	GR+T1+SEIS	0.023	0.028	0.006	0.012	0.057	0.004

D I S P L A C E M E N T S

Point name	Load combination	TRANSLATIONS (in) X	Y	Z	ROTATIONS (deg) X	Y	Z
C03	GR	-0.001	-0.002	-0.001	-0.004	0.001	0.002
	T1	-0.018	0.030	0.002	0.015	0.053	-0.006
	E1	0.001	0.000	-0.001	0.000	-0.001	0.000
	E2	0.000	0.000	0.001	0.001	0.001	0.000
	GR+T1	-0.019	0.028	0.001	0.011	0.054	-0.004
	SEIS	0.001	0.000	0.002	0.001	0.003	0.000
	GR+T1+SEIS	0.020	0.028	0.004	0.012	0.057	0.004
C04	GR	-0.001	-0.002	-0.001	-0.004	0.001	0.002
	T1	-0.018	0.030	0.002	0.015	0.053	-0.006
	E1	0.001	0.000	-0.001	0.000	-0.001	0.000
	E2	0.000	0.000	0.001	0.001	0.001	0.000
	GR+T1	-0.019	0.028	0.001	0.011	0.054	-0.004
	SEIS	0.001	0.000	0.002	0.001	0.003	0.000
	GR+T1+SEIS	0.020	0.028	0.003	0.012	0.057	0.004
C05	GR	-0.001	-0.002	-0.001	-0.004	0.001	0.002
	T1	-0.012	0.029	-0.003	0.015	0.050	-0.009
	E1	0.001	0.000	-0.001	0.000	-0.001	0.000
	E2	0.000	0.000	0.001	0.001	0.001	0.000
	GR+T1	-0.012	0.027	-0.004	0.011	0.051	-0.006
	SEIS	0.001	0.000	0.002	0.001	0.003	0.000
	GR+T1+SEIS	0.013	0.028	0.006	0.012	0.053	0.007
C06	GR	-0.001	-0.002	-0.001	-0.004	0.001	0.003
	T1	-0.005	0.029	-0.008	0.019	0.050	-0.009
	E1	0.001	0.000	-0.001	0.000	-0.001	0.000
	E2	0.000	0.000	0.001	0.001	0.002	0.000
	GR+T1	-0.006	0.027	-0.009	0.015	0.051	-0.006
	SEIS	0.001	0.000	0.002	0.002	0.003	0.001
	GR+T1+SEIS	0.007	0.027	0.010	0.016	0.054	0.007
C07	GR	-0.001	-0.002	-0.001	-0.004	0.001	0.003
	T1	-0.003	0.028	-0.009	0.019	0.050	-0.009
	E1	0.001	0.000	0.000	0.000	-0.001	0.000
	E2	0.000	0.000	0.001	0.001	0.002	0.000
	GR+T1	-0.003	0.027	-0.011	0.015	0.051	-0.006
	SEIS	0.001	0.000	0.001	0.002	0.003	0.001
	GR+T1+SEIS	0.004	0.027	0.012	0.016	0.054	0.007
C08 N	GR	-0.001	-0.001	-0.001	-0.004	0.001	0.003
	T1	0.003	0.028	-0.014	0.023	0.048	-0.011
	E1	0.001	0.000	0.000	0.000	-0.001	-0.001
	E2	0.000	0.000	0.001	0.002	0.002	0.000
	GR+T1	0.002	0.026	-0.015	0.019	0.048	-0.008
	SEIS	0.001	0.000	0.001	0.002	0.003	0.001
	GR+T1+SEIS	0.003	0.027	0.016	0.020	0.052	0.008

D I S P L A C E M E N T S

Point name	Load combination	TRANSLATIONS (in) X	Y	Z	ROTATIONS (deg) X	Y	Z
C08 F	GR	0.000	-0.001	-0.001	-0.004	0.001	0.002
	T1	0.008	0.012	-0.022	0.018	0.010	-0.041
	E1	0.001	0.000	0.000	0.000	-0.002	-0.002
	E2	0.000	0.000	0.000	0.002	0.001	0.000
	GR+T1	0.008	0.012	-0.023	0.014	0.011	-0.039
	SEIS	0.001	0.000	0.000	0.002	0.003	0.002
	GR+T1+SEIS	0.008	0.012	0.023	0.017	0.014	0.041
C09 N	GR	0.000	-0.001	-0.001	-0.004	0.001	0.002
	T1	0.007	0.011	-0.022	0.018	0.008	-0.041
	E1	0.001	0.000	0.000	0.000	-0.002	-0.002
	E2	0.000	0.000	0.000	0.002	0.001	0.000
	GR+T1	0.007	0.011	-0.023	0.014	0.009	-0.039
	SEIS	0.001	0.000	0.000	0.002	0.003	0.002
	GR+T1+SEIS	0.007	0.011	0.023	0.017	0.012	0.041
C09 F	GR	0.000	0.000	0.000	-0.002	0.000	0.000
	T1	0.001	-0.001	-0.014	-0.001	-0.005	-0.018
	E1	0.000	0.000	0.000	0.000	-0.001	-0.001
	E2	0.000	0.000	0.000	0.000	0.000	0.000
	GR+T1	0.001	-0.001	-0.014	-0.003	-0.005	-0.017
	SEIS	0.000	0.000	0.000	0.001	0.001	0.001
	GR+T1+SEIS	0.001	0.001	0.014	0.004	0.006	0.018
C10	GR	0.000	0.000	0.000	-0.002	0.000	0.000
	T1	0.001	-0.001	-0.013	-0.001	-0.005	-0.017
	E1	0.000	0.000	0.000	0.000	0.000	-0.001
	E2	0.000	0.000	0.000	0.000	0.000	0.000
	GR+T1	0.001	-0.001	-0.013	-0.003	-0.005	-0.017
	SEIS	0.000	0.000	0.000	0.001	0.001	0.001
	GR+T1+SEIS	0.001	0.001	0.013	0.004	0.006	0.017
C11	GR	0.000	0.000	0.000	-0.001	0.000	0.000
	T1	0.000	0.000	-0.007	-0.002	-0.004	-0.008
	E1	0.000	0.000	0.000	0.000	0.000	0.000
	E2	0.000	0.000	0.000	0.000	0.000	0.000
	GR+T1	0.000	0.000	-0.007	-0.003	-0.004	-0.008
	SEIS	0.000	0.000	0.000	0.000	0.000	0.000
	GR+T1+SEIS	0.001	0.000	0.007	0.003	0.004	0.009
C12	GR	0.000	0.000	0.000	0.000	0.000	0.000
	T1	0.000	0.000	0.000	0.000	0.000	0.000
	E1	0.000	0.000	0.000	0.000	0.000	0.000
	E2	0.000	0.000	0.000	0.000	0.000	0.000
	GR+T1	0.000	0.000	0.000	0.000	0.000	0.000
	SEIS	0.000	0.000	0.000	0.000	0.000	0.000
	GR+T1+SEIS	0.000	0.000	0.000	0.000	0.000	0.000

*** Segment C end ***

D I S P L A C E M E N T S

Point name	Load combination	TRANSLATIONS (in) X	Y	Z	ROTATIONS (deg) X	Y	Z
*** Segment D begin ***							
C11	GR	0.000	0.000	0.000	-0.001	0.000	0.000
	T1	0.000	0.000	-0.007	-0.002	-0.004	-0.008
	E1	0.000	0.000	0.000	0.000	0.000	0.000
	E2	0.000	0.000	0.000	0.000	0.000	0.000
	GR+T1	0.000	0.000	-0.007	-0.003	-0.004	-0.008
	SEIS	0.000	0.000	0.000	0.000	0.000	0.000
	GR+T1+SEIS	0.001	0.000	0.007	0.003	0.004	0.009
D01 N	GR	0.000	0.000	0.000	0.000	0.000	0.000
	T1	0.004	0.038	-0.009	-0.009	0.000	-0.006
	E1	0.000	0.000	0.000	0.000	0.000	-0.001
	E2	0.000	0.000	0.000	0.001	0.000	0.000
	GR+T1	0.004	0.038	-0.010	-0.009	0.000	-0.006
	SEIS	0.000	0.000	0.000	0.001	0.000	0.001
	GR+T1+SEIS	0.005	0.038	0.010	0.010	0.000	0.006
D01 F	GR	0.000	0.000	0.000	0.000	0.000	0.000
	T1	0.004	0.044	-0.023	-0.037	0.005	-0.003
	E1	0.000	0.000	0.000	0.000	0.000	-0.001
	E2	0.000	0.000	0.000	0.000	0.000	0.000
	GR+T1	0.004	0.044	-0.024	-0.037	0.005	-0.003
	SEIS	0.000	0.000	0.000	0.000	0.000	0.001
	GR+T1+SEIS	0.005	0.044	0.024	0.037	0.005	0.003
D02	GR	0.000	0.000	0.000	0.000	0.000	0.000
	T1	0.004	0.040	-0.032	-0.038	0.005	-0.003
	E1	0.000	0.000	0.000	0.000	0.000	-0.001
	E2	0.000	0.000	0.000	0.000	0.000	0.000
	GR+T1	0.004	0.040	-0.032	-0.038	0.005	-0.003
	SEIS	0.000	0.000	0.000	0.000	0.000	0.001
	GR+T1+SEIS	0.004	0.040	0.033	0.038	0.005	0.003
D03	GR	0.000	0.000	0.000	0.000	0.000	0.000
	T1	0.001	0.023	-0.062	-0.036	0.005	-0.003
	E1	0.000	0.000	0.000	0.000	0.001	-0.001
	E2	0.000	0.000	0.000	0.000	0.000	0.000
	GR+T1	0.001	0.023	-0.063	-0.036	0.005	-0.003
	SEIS	0.000	0.000	0.000	0.000	0.001	0.001
	GR+T1+SEIS	0.002	0.023	0.063	0.036	0.006	0.003

D I S P L A C E M E N T S

Point name	Load combination	TRANSLATIONS (in) X	Y	Z	ROTATIONS (deg) X	Y	Z
D04	GR	0.000	0.000	0.000	0.000	0.000	0.000
	T1	0.001	0.019	0.012	-0.036	0.005	-0.003
	E1	0.000	0.000	0.000	0.000	0.001	-0.001
	E2	0.000	0.000	0.000	0.000	0.000	0.000
	GR+T1	0.001	0.019	0.012	-0.036	0.005	-0.003
	SEIS	0.000	0.000	0.000	0.000	0.001	0.001
	GR+T1+SEIS	0.001	0.019	0.012	0.036	0.006	0.003
D05 N	GR	0.000	0.000	0.000	0.000	0.000	0.000
	T1	0.001	0.017	0.009	-0.035	0.005	-0.003
	E1	0.000	0.000	0.000	0.000	0.001	-0.001
	E2	0.000	0.000	0.000	0.000	0.000	0.000
	GR+T1	0.001	0.017	0.009	-0.035	0.005	-0.003
	SEIS	0.000	0.000	0.000	0.000	0.001	0.001
	GR+T1+SEIS	0.001	0.017	0.009	0.035	0.005	0.003
D05 F	GR	0.000	0.000	0.000	0.000	0.000	0.000
	T1	0.000	0.003	0.000	0.000	0.000	0.000
	E1	0.000	0.000	0.000	0.000	0.000	0.000
	E2	0.000	0.000	0.000	0.000	0.000	0.000
	GR+T1	0.000	0.003	0.000	0.000	0.000	0.000
	SEIS	0.000	0.000	0.000	0.000	0.000	0.000
	GR+T1+SEIS	0.000	0.003	0.000	0.000	0.000	0.000
D06	GR	0.000	0.000	0.000	0.000	0.000	0.000
	T1	0.000	0.003	0.000	0.000	0.000	0.000
	E1	0.000	0.000	0.000	0.000	0.000	0.000
	E2	0.000	0.000	0.000	0.000	0.000	0.000
	GR+T1	0.000	0.003	0.000	0.000	0.000	0.000
	SEIS	0.000	0.000	0.000	0.000	0.000	0.000
	GR+T1+SEIS	0.000	0.003	0.000	0.000	0.000	0.000
D07	GR	0.000	0.000	0.000	0.000	0.000	0.000
	T1	0.000	0.000	0.000	0.000	0.000	0.000
	E1	0.000	0.000	0.000	0.000	0.000	0.000
	E2	0.000	0.000	0.000	0.000	0.000	0.000
	GR+T1	0.000	0.000	0.000	0.000	0.000	0.000
	SEIS	0.000	0.000	0.000	0.000	0.000	0.000
	GR+T1+SEIS	0.000	0.000	0.000	0.000	0.000	0.000

*** Segment D end ***

*** Segment E begin ***

D I S P L A C E M E N T S

Point name	Load combination	TRANSLATIONS (in) X	Y	Z	ROTATIONS (deg) X	Y	Z
C05	GR	-0.001	-0.002	-0.001	-0.004	0.001	0.002
	T1	-0.012	0.029	-0.003	0.015	0.050	-0.009
	E1	0.001	0.000	-0.001	0.000	-0.001	0.000
	E2	0.000	0.000	0.001	0.001	0.001	0.000
	GR+T1	-0.012	0.027	-0.004	0.011	0.051	-0.006
	SEIS	0.001	0.000	0.002	0.001	0.003	0.000
	GR+T1+SEIS	0.013	0.028	0.006	0.012	0.053	0.007
E01 N	GR	-0.001	-0.002	-0.001	-0.004	0.001	0.003
	T1	-0.017	0.031	-0.011	0.011	0.043	-0.014
	E1	0.001	0.000	-0.001	0.000	-0.001	0.000
	E2	0.000	0.000	0.001	0.001	0.001	0.000
	GR+T1	-0.018	0.028	-0.012	0.007	0.044	-0.012
	SEIS	0.001	0.001	0.002	0.001	0.003	0.000
	GR+T1+SEIS	0.019	0.029	0.014	0.008	0.047	0.012
E01 F	GR	-0.001	-0.003	-0.001	-0.003	0.000	0.003
	T1	-0.017	0.030	-0.016	-0.015	-0.005	-0.028
	E1	0.001	0.000	-0.001	0.000	-0.001	0.000
	E2	0.000	0.000	0.001	0.001	0.000	0.000
	GR+T1	-0.018	0.027	-0.017	-0.019	-0.005	-0.025
	SEIS	0.001	0.001	0.002	0.001	0.002	0.001
	GR+T1+SEIS	0.019	0.028	0.019	0.020	0.007	0.026
E02 N	GR	-0.001	-0.003	-0.001	-0.003	0.000	0.003
	T1	-0.003	0.021	-0.027	-0.020	-0.018	-0.035
	E1	0.001	0.000	0.000	0.000	-0.001	0.000
	E2	0.000	0.000	0.001	0.000	0.000	0.000
	GR+T1	-0.003	0.018	-0.027	-0.023	-0.018	-0.032
	SEIS	0.002	0.001	0.002	0.001	0.002	0.001
	GR+T1+SEIS	0.005	0.019	0.029	0.024	0.020	0.032
E02 F	GR	-0.001	-0.003	-0.001	-0.003	-0.001	0.004
	T1	0.003	0.017	-0.026	-0.027	-0.053	-0.050
	E1	0.001	0.000	0.000	0.000	-0.001	-0.001
	E2	0.000	0.000	0.001	0.000	0.000	0.000
	GR+T1	0.003	0.015	-0.027	-0.029	-0.053	-0.046
	SEIS	0.002	0.001	0.001	0.001	0.001	0.001
	GR+T1+SEIS	0.004	0.015	0.028	0.030	0.055	0.047
E03	GR	-0.001	-0.002	-0.001	-0.003	-0.001	0.004
	T1	0.006	0.015	-0.024	-0.027	-0.054	-0.051
	E1	0.001	0.000	0.000	0.000	-0.001	-0.001
	E2	0.000	0.000	0.001	0.000	0.000	0.000
	GR+T1	0.005	0.013	-0.025	-0.030	-0.055	-0.047
	SEIS	0.002	0.001	0.001	0.001	0.001	0.001
	GR+T1+SEIS	0.007	0.014	0.026	0.030	0.056	0.048

D I S P L A C E M E N T S

Point name	Load combination	TRANSLATIONS (in) X	Y	Z	ROTATIONS (deg) X	Y	Z
E04	GR	-0.001	0.000	-0.001	-0.002	0.000	0.003
	T1	0.043	-0.013	0.007	-0.035	-0.052	-0.049
	E1	0.001	0.000	0.000	0.000	-0.002	-0.001
	E2	0.000	0.000	0.001	0.000	0.000	0.000
	GR+T1	0.042	-0.013	0.007	-0.036	-0.052	-0.045
	SEIS	0.002	0.000	0.002	0.000	0.002	0.001
	GR+T1+SEIS	0.044	0.013	0.008	0.037	0.054	0.047

*** Segment E end ***

*** Segment F begin ***

E04	GR	-0.001	0.000	-0.001	-0.002	0.000	0.003
	T1	0.043	-0.013	0.007	-0.035	-0.052	-0.049
	E1	0.001	0.000	0.000	0.000	-0.002	-0.001
	E2	0.000	0.000	0.001	0.000	0.000	0.000
	GR+T1	0.042	-0.013	0.007	-0.036	-0.052	-0.045
	SEIS	0.002	0.000	0.002	0.000	0.002	0.001
	GR+T1+SEIS	0.044	0.013	0.008	0.037	0.054	0.047
F01	GR	-0.001	0.000	-0.001	-0.001	0.000	0.003
	T1	0.048	-0.016	0.001	-0.036	-0.047	-0.046
	E1	0.002	0.000	0.000	0.000	-0.002	-0.001
	E2	0.000	0.000	0.001	0.000	0.000	0.000
	GR+T1	0.047	-0.017	0.000	-0.037	-0.048	-0.042
	SEIS	0.002	0.000	0.002	0.000	0.002	0.001
	GR+T1+SEIS	0.049	0.017	0.002	0.037	0.050	0.044
F02	GR	-0.001	0.000	-0.001	-0.001	0.000	0.003
	T1	0.050	-0.018	-0.002	-0.036	-0.047	-0.046
	E1	0.002	0.000	0.000	0.000	-0.002	-0.001
	E2	0.000	0.000	0.001	0.000	0.000	0.000
	GR+T1	0.049	-0.018	-0.003	-0.037	-0.048	-0.042
	SEIS	0.002	0.000	0.002	0.000	0.002	0.001
	GR+T1+SEIS	0.051	0.018	0.004	0.037	0.050	0.044
F03	GR	-0.001	0.000	-0.001	0.000	0.000	0.003
	T1	0.058	-0.024	-0.015	-0.033	-0.040	-0.040
	E1	0.002	0.000	0.000	0.000	-0.002	-0.001
	E2	0.000	0.000	0.001	0.000	0.000	0.000
	GR+T1	0.057	-0.025	-0.015	-0.033	-0.040	-0.037
	SEIS	0.002	0.000	0.002	0.000	0.002	0.001
	GR+T1+SEIS	0.059	0.025	0.017	0.033	0.042	0.038

D I S P L A C E M E N T S

Point name	Load combination	TRANSLATIONS (in) X	Y	Z	ROTATIONS (deg) X	Y	Z
F04 N	GR	-0.001	0.000	-0.001	0.000	0.000	0.002
	T1	0.060	-0.026	-0.018	-0.031	-0.038	-0.038
	E1	0.002	0.000	0.000	0.000	-0.002	-0.001
	E2	0.000	0.000	0.001	0.000	0.000	0.000
	GR+T1	0.059	-0.026	-0.019	-0.031	-0.038	-0.036
	SEIS	0.002	0.000	0.002	0.000	0.002	0.001
	GR+T1+SEIS	0.062	0.027	0.021	0.031	0.040	0.037
F04 F	GR	-0.001	0.000	0.000	0.001	0.000	0.000
	T1	0.065	-0.016	-0.027	0.035	0.010	0.001
	E1	0.002	0.000	0.000	0.000	-0.002	-0.001
	E2	0.000	0.000	0.001	-0.001	-0.001	0.000
	GR+T1	0.064	-0.017	-0.027	0.036	0.010	0.002
	SEIS	0.003	0.000	0.001	0.002	0.003	0.001
	GR+T1+SEIS	0.066	0.017	0.029	0.038	0.012	0.003
F05 N	GR	-0.001	0.000	0.000	0.001	0.000	0.000
	T1	0.064	-0.001	-0.018	0.037	0.021	0.006
	E1	0.003	0.000	0.000	0.000	-0.001	-0.001
	E2	0.000	0.000	0.001	-0.001	-0.001	0.000
	GR+T1	0.063	-0.001	-0.019	0.038	0.021	0.006
	SEIS	0.003	0.000	0.001	0.002	0.003	0.001
	GR+T1+SEIS	0.066	0.001	0.020	0.039	0.024	0.007
F05 F	GR	-0.001	0.000	0.000	0.000	0.000	-0.001
	T1	0.050	0.006	-0.010	0.018	0.028	0.024
	E1	0.003	0.000	0.000	0.000	-0.001	0.000
	E2	0.000	0.000	0.000	0.000	-0.001	0.000
	GR+T1	0.050	0.006	-0.010	0.019	0.028	0.023
	SEIS	0.003	0.000	0.000	0.000	0.002	0.000
	GR+T1+SEIS	0.053	0.006	0.010	0.019	0.030	0.023
F06	GR	-0.001	0.000	0.000	0.000	0.000	0.000
	T1	0.044	0.004	-0.007	0.013	0.028	0.023
	E1	0.003	0.000	0.000	0.000	-0.001	0.000
	E2	0.000	0.000	0.000	0.000	-0.001	0.000
	GR+T1	0.044	0.004	-0.007	0.013	0.028	0.022
	SEIS	0.003	0.000	0.000	0.000	0.002	0.000
	GR+T1+SEIS	0.047	0.004	0.007	0.014	0.030	0.022
F07	GR	-0.001	0.000	0.000	0.000	0.000	0.000
	T1	0.041	0.003	-0.005	0.010	0.027	0.022
	E1	0.003	0.000	0.000	0.000	-0.001	0.000
	E2	0.000	0.000	0.000	0.000	-0.001	0.000
	GR+T1	0.040	0.003	-0.005	0.010	0.027	0.021
	SEIS	0.003	0.000	0.000	0.000	0.002	0.000
	GR+T1+SEIS	0.043	0.003	0.006	0.010	0.029	0.021

D I S P L A C E M E N T S

Point name	Load combination	TRANSLATIONS (in) X	Y	Z	ROTATIONS (deg) X	Y	Z
F08	GR	0.000	0.000	0.000	0.000	0.000	0.000
	T1	0.005	0.001	-0.003	0.010	0.027	0.022
	E1	0.000	0.000	0.000	0.000	-0.001	0.000
	E2	0.000	0.000	0.000	0.000	-0.001	0.000
	GR+T1	0.005	0.001	-0.003	0.010	0.027	0.021
	SEIS	0.000	0.000	0.000	0.000	0.002	0.000
	GR+T1+SEIS	0.005	0.001	0.003	0.010	0.029	0.021
F09 N	GR	0.000	0.000	0.000	0.000	0.000	0.000
	T1	0.004	0.001	-0.002	0.010	0.027	0.021
	E1	0.000	0.000	0.000	0.000	-0.001	0.000
	E2	0.000	0.000	0.000	0.000	-0.001	0.000
	GR+T1	0.004	0.001	-0.002	0.010	0.027	0.021
	SEIS	0.000	0.000	0.000	0.000	0.002	0.000
	GR+T1+SEIS	0.004	0.001	0.002	0.010	0.028	0.021
F09 F	GR	0.000	0.000	0.000	0.000	0.000	0.000
	T1	0.001	0.000	-0.001	0.001	0.001	0.000
	E1	0.000	0.000	0.000	0.000	0.000	0.000
	E2	0.000	0.000	0.000	0.000	0.000	0.000
	GR+T1	0.001	0.000	-0.001	0.001	0.001	0.000
	SEIS	0.000	0.000	0.000	0.000	0.000	0.000
	GR+T1+SEIS	0.001	0.000	0.001	0.001	0.001	0.000
F10	GR	0.000	0.000	0.000	0.000	0.000	0.000
	T1	0.000	0.000	0.000	0.000	0.000	0.000
	E1	0.000	0.000	0.000	0.000	0.000	0.000
	E2	0.000	0.000	0.000	0.000	0.000	0.000
	GR+T1	0.000	0.000	0.000	0.000	0.000	0.000
	SEIS	0.000	0.000	0.000	0.000	0.000	0.000
	GR+T1+SEIS	0.000	0.000	0.000	0.000	0.000	0.000

*** Segment F end ***

*** Segment G begin ***

E04	GR	-0.001	0.000	-0.001	-0.002	0.000	0.003
	T1	0.043	-0.013	0.007	-0.035	-0.052	-0.049
	E1	0.001	0.000	0.000	0.000	-0.002	-0.001
	E2	0.000	0.000	0.001	0.000	0.000	0.000
	GR+T1	0.042	-0.013	0.007	-0.036	-0.052	-0.045
	SEIS	0.002	0.000	0.002	0.000	0.002	0.001
	GR+T1+SEIS	0.044	0.013	0.008	0.037	0.054	0.047

D I S P L A C E M E N T S

Point name	Load combination	TRANSLATIONS (in) X	Y	Z	ROTATIONS (deg) X	Y	Z
G01 N	GR	-0.001	0.000	-0.001	-0.002	0.000	0.003
	T1	0.038	-0.009	0.014	-0.034	-0.052	-0.049
	E1	0.001	0.000	0.000	0.000	-0.002	-0.001
	E2	0.000	0.000	0.001	0.000	0.000	0.000
	GR+T1	0.037	-0.009	0.013	-0.036	-0.052	-0.046
	SEIS	0.002	0.000	0.002	0.001	0.002	0.001
	GR+T1+SEIS	0.039	0.010	0.015	0.036	0.054	0.047
G01 F	GR	-0.001	0.000	-0.001	-0.003	0.000	0.002
	T1	0.026	-0.002	0.017	-0.017	-0.035	-0.039
	E1	0.001	0.000	0.000	0.000	-0.001	-0.002
	E2	0.000	0.000	0.001	0.001	-0.001	0.001
	GR+T1	0.025	-0.002	0.016	-0.020	-0.035	-0.036
	SEIS	0.002	0.000	0.001	0.002	0.002	0.002
	GR+T1+SEIS	0.026	0.002	0.017	0.021	0.037	0.039
G02	GR	-0.001	0.000	-0.001	-0.003	0.000	0.002
	T1	0.022	0.000	0.015	-0.015	-0.034	-0.038
	E1	0.001	0.000	0.000	0.000	-0.001	-0.002
	E2	0.000	0.000	0.001	0.001	-0.001	0.001
	GR+T1	0.021	0.000	0.014	-0.018	-0.034	-0.036
	SEIS	0.002	0.000	0.001	0.002	0.002	0.002
	GR+T1+SEIS	0.023	0.000	0.015	0.020	0.036	0.038
G03 N	GR	-0.001	0.000	-0.001	-0.003	0.000	0.003
	T1	0.019	0.002	0.013	-0.014	-0.033	-0.038
	E1	0.001	0.000	0.000	0.001	-0.001	-0.002
	E2	0.000	0.000	0.001	0.001	-0.001	0.001
	GR+T1	0.018	0.002	0.012	-0.016	-0.033	-0.035
	SEIS	0.002	0.000	0.001	0.002	0.001	0.002
	GR+T1+SEIS	0.019	0.002	0.014	0.018	0.035	0.038
G03 F	GR	0.000	-0.001	0.000	-0.001	-0.001	0.002
	T1	0.004	-0.004	0.011	-0.006	-0.017	-0.017
	E1	0.001	0.000	0.000	0.000	0.000	-0.002
	E2	0.000	0.000	0.001	0.002	-0.001	0.001
	GR+T1	0.003	-0.004	0.010	-0.007	-0.018	-0.016
	SEIS	0.001	0.001	0.001	0.002	0.001	0.003
	GR+T1+SEIS	0.004	0.005	0.011	0.009	0.019	0.019
G04	GR	0.000	-0.001	0.000	-0.001	-0.001	0.001
	T1	0.001	-0.014	0.011	-0.004	-0.012	-0.014
	E1	0.000	0.000	0.000	0.000	0.000	-0.002
	E2	0.000	0.000	0.000	0.002	-0.001	0.001
	GR+T1	0.001	-0.015	0.011	-0.005	-0.013	-0.013
	SEIS	0.001	0.001	0.000	0.002	0.001	0.003
	GR+T1+SEIS	0.002	0.015	0.012	0.007	0.014	0.016

D I S P L A C E M E N T S

Point name	Load combination	TRANSLATIONS (in) X	Y	Z	ROTATIONS (deg) X	Y	Z
G05	GR	0.000	0.000	0.000	-0.001	-0.001	0.001
	T1	0.000	0.007	0.012	-0.004	-0.012	-0.014
	E1	0.000	0.000	0.000	0.000	0.000	-0.002
	E2	0.000	0.000	0.000	0.002	-0.001	0.001
	GR+T1	0.000	0.007	0.012	-0.005	-0.013	-0.013
	SEIS	0.000	0.000	0.000	0.002	0.001	0.003
	GR+T1+SEIS	0.001	0.007	0.012	0.007	0.014	0.016
G06 N	GR	0.000	0.000	0.000	-0.001	-0.001	0.001
	T1	0.000	0.007	0.012	-0.004	-0.012	-0.014
	E1	0.000	0.000	0.000	0.000	0.000	-0.002
	E2	0.000	0.000	0.000	0.002	-0.001	0.001
	GR+T1	0.000	0.007	0.012	-0.005	-0.013	-0.013
	SEIS	0.000	0.000	0.000	0.002	0.001	0.003
	GR+T1+SEIS	0.001	0.007	0.012	0.007	0.014	0.016
G06 F	GR	0.000	0.000	0.000	0.000	0.000	0.000
	T1	0.000	0.000	0.005	0.000	-0.001	-0.001
	E1	0.000	0.000	0.000	0.000	0.000	0.000
	E2	0.000	0.000	0.000	0.000	0.000	0.000
	GR+T1	0.000	0.000	0.005	0.000	-0.001	-0.001
	SEIS	0.000	0.000	0.000	0.000	0.000	0.000
	GR+T1+SEIS	0.000	0.000	0.005	0.000	0.001	0.001
G07	GR	0.000	0.000	0.000	0.000	0.000	0.000
	T1	0.000	0.000	0.003	0.000	0.000	0.000
	E1	0.000	0.000	0.000	0.000	0.000	0.000
	E2	0.000	0.000	0.000	0.000	0.000	0.000
	GR+T1	0.000	0.000	0.003	0.000	0.000	0.000
	SEIS	0.000	0.000	0.000	0.000	0.000	0.000
	GR+T1+SEIS	0.000	0.000	0.003	0.000	0.000	0.000
G08	GR	0.000	0.000	0.000	0.000	0.000	0.000
	T1	0.000	0.000	0.000	0.000	0.000	0.000
	E1	0.000	0.000	0.000	0.000	0.000	0.000
	E2	0.000	0.000	0.000	0.000	0.000	0.000
	GR+T1	0.000	0.000	0.000	0.000	0.000	0.000
	SEIS	0.000	0.000	0.000	0.000	0.000	0.000
	GR+T1+SEIS	0.000	0.000	0.000	0.000	0.000	0.000

*** Segment G end ***

S U P P O R T F O R C E S

Point/ Supp. ID	Connect/ Type	Load Combination	LOCAL Dirn	Force	Deform	GLOBAL Dirn	Force	Deform
A03 M		GR	down	316	0.000	X		0.000
A03 M1	Y - Stop		+Z		0.000	Y	-316	0.000
Stiff	:RIGID		-X		0.000	Z		0.000
		T1	up	1625	0.000	X		-0.011
			+Z		0.000	Y	1625	0.000
			-X		0.011	Z		0.000
		E1	down	1	0.000	X		0.000
			+Z		0.000	Y	-1	0.000
			+X		0.000	Z		0.000
		E2	down	1	0.000	X		0.000
			+Z		0.000	Y	-1	0.000
			+X		0.000	Z		0.000
		GR+T1	up	1309	0.000	X		-0.011
			+Z		0.000	Y	1309	0.000
			-X		0.011	Z		0.000
		SEIS	down	2	0.000	X		0.000
			-Z		0.000	Y	2	0.000
			-X		0.000	Z		0.000
		GR+T1+SEIS	down	1311	0.000	X		0.011
			-Z		0.000	Y	1311	0.000
			-X		0.011	Z		0.000
B05		GR	down	214	0.000	X		0.000
B05 1	Y - Stop		-Z		0.000	Y	-214	0.000
Stiff	:RIGID		-X		0.000	Z		0.000
		T1	up	214	0.015	X		-0.046
			+Z		0.059	Y	214	0.015
			-X		0.046	Z		0.059
		E1	up	9	0.000	X		0.001
			-Z		0.001	Y	9	0.000
			+X		0.001	Z		-0.001
		E2	down	1	0.000	X		0.000
			+Z		0.001	Y	-1	0.000
			-X		0.000	Z		0.001
		GR+T1	up		0.015	X		-0.047
			+Z		0.059	Y		0.015
			-X		0.047	Z		0.059

S U P P O R T F O R C E S

Point/ Supp. ID	Connect/ Type	Load Combination	LOCAL Dirn	LOCAL Force	LOCAL Deform	GLOBAL Dirn	GLOBAL Force	GLOBAL Deform
		SEIS	down	10	0.000	X		0.001
			-Z		0.001	Y	10	0.000
			-X		0.001	Z		0.001
		GR+T1+SEIS	down	10	0.015	X		0.048
			-Z		0.060	Y	10	0.015
			-X		0.048	Z		0.060
B12		GR	down	255	0.000	X		0.000
B12 1	Y - Stop		-Z		0.001	Y	-255	0.000
Stiff	:RIGID		+X		0.000	Z		-0.001
		T1	down	35	0.000	X	51	0.007
			-Z	54	0.008	Y	-35	0.000
			+X	51	0.007	Z	-54	-0.008
		E1	down	4	0.000	X		0.000
			-Z		0.001	Y	-4	0.000
			+X		0.000	Z		-0.001
		E2	down	0	0.000	X		0.000
			+Z		0.002	Y	0	0.000
			-X		0.000	Z		0.002
		GR+T1	down	291	0.000	X	51	0.008
			-Z	54	0.009	Y	-291	0.000
			+X	51	0.008	Z	-54	-0.009
		SEIS	down	4	0.000	X		0.000
			-Z		0.003	Y	4	0.000
			-X		0.000	Z		0.003
		GR+T1+SEIS	down	294	0.000	X	51	0.008
			-Z	54	0.012	Y	294	0.000
			-X	51	0.008	Z	54	0.012
D02		GR	down	145	0.000	X		0.000
D02 1	Y - Stop		-Z		0.000	Y	-145	0.000
Stiff	:RIGID		-X		0.000	Z		0.000
		T1	up	145	0.040	X		0.004
			-Z		0.032	Y	145	0.040
			+X		0.004	Z		-0.032
		E1	down	2	0.000	X		0.000
			-Z		0.000	Y	-2	0.000
			+X		0.000	Z		0.000
		E2	up	21	0.000	X		0.000

S U P P O R T F O R C E S

Point/ Supp. ID	Connect/ Type	Load Combination	LOCAL Dirn	LOCAL Force	LOCAL Deform	GLOBAL Dirn	GLOBAL Force	GLOBAL Deform
			+Z		0.000	Y	21	0.000
			+X		0.000	Z		0.000
		GR+T1	up		0.040	X		0.004
			-Z		0.032	Y		0.040
			+X		0.004	Z		-0.032
		SEIS	down	23	0.000	X		0.000
			-Z		0.000	Y	23	0.000
			-X		0.000	Z		0.000
		GR+T1+SEIS	down	23	0.040	X		0.004
			-Z		0.033	Y	23	0.040
			-X		0.004	Z		0.033
F06		GR	down	303	0.000	X		-0.001
F06 1	Y - Stop		-Z		0.000	Y	-303	0.000
Stiff	:RIGID		-X		0.001	Z		0.000
		T1	up	303	0.004	X		0.044
			-Z		0.007	Y	303	0.004
			+X		0.044	Z		-0.007
		E1	down	13	0.000	X		0.003
			+Z		0.000	Y	-13	0.000
			+X		0.003	Z		0.000
		E2	down	4	0.000	X		0.000
			+Z		0.000	Y	-4	0.000
			-X		0.000	Z		0.000
		GR+T1	up		0.004	X		0.044
			-Z		0.007	Y		0.004
			+X		0.044	Z		-0.007
		SEIS	down	17	0.000	X		0.003
			-Z		0.000	Y	17	0.000
			-X		0.003	Z		0.000
		GR+T1+SEIS	down	17	0.004	X		0.047
			-Z		0.007	Y	17	0.004
			-X		0.047	Z		0.007
G02		GR	down	224	0.000	X		-0.001
G02 1	Y - Stop		-Z		0.001	Y	-224	0.000
Stiff	:RIGID		-X		0.001	Z		-0.001
		T1	down	310	0.000	X	97	0.022
			+Z	65	0.015	Y	-310	0.000

S U P P O R T F O R C E S

Point/ Supp. ID	Connect/ Type	Load Combination	LOCAL Dirn	LOCAL Force	LOCAL Deform	GLOBAL Dirn	GLOBAL Force	GLOBAL Deform
			+X	97	0.022	Z	65	0.015
		E1	down	7	0.000	X		0.001
			+Z		0.000	Y	-7	0.000
			+X		0.001	Z		0.000
		E2	up	3	0.000	X		0.000
			+Z		0.001	Y	3	0.000
			-X		0.000	Z		0.001
		GR+T1	down	534	0.000	X	97	0.021
			+Z	65	0.014	Y	-534	0.000
			+X	97	0.021	Z	65	0.014
		SEIS	down	10	0.000	X		0.002
			-Z		0.001	Y	10	0.000
			-X		0.002	Z		0.001
		GR+T1+SEIS	down	544	0.000	X	97	0.023
			-Z	65	0.015	Y	544	0.000
			-X	97	0.023	Z	65	0.015

R E S T R A I N T R E A C T I O N S

Point name	Load combination	FORCES (lb) X	Y	Z	Result	MOMENTS (ft-lb) X	Y	Z	Result
A00	Anchor								
	GR	-44	-18	-13	49	17	21	88	92
	T1	-21549	-29	-227	21550	-349	-489	42625	42629
	E1	49	0	15	51	31	1	-67	73
	E2	3	0	50	50	66	-15	-6	68
	GR+T1	-21593	-46	-240	21594	-331	-469	42713	42716
	SEIS	52	0	65	83	97	16	73	122
	GR+T1+SEIS	21645	46	305	21647	428	485	42785	42790
A03 M	Y - Stop								
	GR	0	-316	0	316	0	0	0	0
	T1	0	1625	0	1625	0	0	0	0
	E1	0	-1	0	1	0	0	0	0
	E2	0	-1	0	1	0	0	0	0
	GR+T1	0	1309	0	1309	0	0	0	0
	SEIS	0	2	0	2	0	0	0	0
	GR+T1+SEIS	0	1311	0	1311	0	0	0	0
A08	Anchor								
	GR	32	-113	9	118	18	-2	-2	18
	T1	19584	-1530	63	19644	221	-129	-12009	12012
	E1	17	0	-15	23	-8	-5	-8	12
	E2	0	2	22	22	11	7	-1	13
	GR+T1	19617	-1643	72	19686	239	-131	-12012	12015
	SEIS	17	2	37	41	19	12	9	24
	GR+T1+SEIS	19634	1645	109	19703	257	143	12020	12024
B05	Y - Stop								
	GR	0	-214	0	214	0	0	0	0
	T1	0	214	0	214	0	0	0	0
	E1	0	9	0	9	0	0	0	0
	E2	0	-1	0	1	0	0	0	0
	GR+T1	0	0	0	0	0	0	0	0
	SEIS	0	10	0	10	0	0	0	0
	GR+T1+SEIS	0	10	0	10	0	0	0	0
B12	Y - Stop								
	GR	0	-255	0	255	0	0	0	0
	T1	51	-35	-54	83	0	0	0	0
	E1	0	-4	0	4	0	0	0	0
	E2	0	0	0	0	0	0	0	0
	GR+T1	51	-291	-54	300	0	0	0	0
	SEIS	0	4	0	4	0	0	0	0
	GR+T1+SEIS	51	294	54	304	0	0	0	0

R E S T R A I N T R E A C T I O N S

Point name	Load combination	FORCES (lb) X	Y	Z	Result	MOMENTS (ft-lb) X	Y	Z	Result
B16	Anchor								
	GR	-2	1	-1	2	26	13	91	96
	T1	93	27	-26	100	-10	507	-9	507
	E1	31	7	-2	32	-7	39	-14	42
	E2	-1	0	12	12	0	-12	0	12
	GR+T1	91	27	-27	99	16	520	83	526
	SEIS	32	7	14	36	7	51	14	53
	GR+T1+SEIS	123	35	41	134	23	571	97	579
C12	Anchor								
	GR	15	-224	14	225	-243	-14	24	245
	T1	1474	-839	937	1938	-562	-1137	-1306	1821
	E1	61	-4	-10	62	-12	-75	-61	97
	E2	8	-26	73	78	54	15	-9	56
	GR+T1	1489	-1064	951	2062	-806	-1152	-1281	1902
	SEIS	70	30	83	112	66	90	70	131
	GR+T1+SEIS	1559	1094	1034	2167	871	1242	1352	2032
D02	Y - Stop								
	GR	0	-145	0	145	0	0	0	0
	T1	0	145	0	145	0	0	0	0
	E1	0	-2	0	2	0	0	0	0
	E2	0	21	0	21	0	0	0	0
	GR+T1	0	0	0	0	0	0	0	0
	SEIS	0	23	0	23	0	0	0	0
	GR+T1+SEIS	0	23	0	23	0	0	0	0
D07	Anchor								
	GR	0	-127	-1	127	22	-1	1	22
	T1	45	144	-101	182	-547	116	-42	560
	E1	24	0	0	24	0	16	-18	24
	E2	0	-2	14	14	7	0	0	7
	GR+T1	45	16	-102	113	-525	114	-41	539
	SEIS	24	2	14	28	7	17	18	26
	GR+T1+SEIS	69	19	116	136	532	131	59	551
F06	Y - Stop								
	GR	0	-303	0	303	0	0	0	0
	T1	0	303	0	303	0	0	0	0
	E1	0	-13	0	13	0	0	0	0
	E2	0	-4	0	4	0	0	0	0
	GR+T1	0	0	0	0	0	0	0	0
	SEIS	0	17	0	17	0	0	0	0
	GR+T1+SEIS	0	17	0	17	0	0	0	0

R E S T R A I N T R E A C T I O N S

Point name	Load combination	FORCES (lb) X	Y	Z	Result	MOMENTS (ft-lb) X	Y	Z	Result
F10	Anchor								
	GR	-1	56	-9	57	33	4	4	33
	T1	49	315	-839	897	968	1128	694	1640
	E1	10	13	4	17	-2	-22	2	22
	E2	0	8	35	36	-29	-42	8	52
	GR+T1	48	371	-848	927	1001	1132	698	1665
	SEIS	10	21	39	45	31	64	10	71
	GR+T1+SEIS	58	392	887	971	1032	1195	708	1731
G02	Y - Stop								
	GR	0	-224	0	224	0	0	0	0
	T1	97	-310	65	332	0	0	0	0
	E1	0	-7	0	7	0	0	0	0
	E2	0	3	0	3	0	0	0	0
	GR+T1	97	-534	65	547	0	0	0	0
	SEIS	0	10	0	10	0	0	0	0
	GR+T1+SEIS	97	544	65	556	0	0	0	0
G08	Anchor								
	GR	0	-129	1	129	27	-2	30	40
	T1	155	-29	181	240	7	-445	-602	749
	E1	50	1	8	50	7	7	-64	64
	E2	-11	0	36	37	27	-16	19	36
	GR+T1	154	-157	182	286	34	-447	-572	727
	SEIS	61	1	44	75	34	23	82	92
	GR+T1+SEIS	215	158	226	350	67	470	655	809

G L O B A L F O R C E S & M O M E N T S

Point name	Load combination	FORCES (lb) X	Y	Z	Result	MOMENTS (ft-lb) X	Y	Z	Result
*** Segment A begin ***									
A00	GR	44	-17	13	49	-17	-21	-88	92
	T1	21549	29	227	21550	349	489	-42625	42629
	E1	-45	0	-15	47	-31	-1	67	73
	E2	-3	0	-46	46	-66	15	6	68
	GR+T1	21593	11	240	21594	331	469	-42713	42716
	SEIS	48	0	61	77	97	16	73	122
	GR+T1+SEIS	21641	11	300	21643	428	485	42785	42790
A01	GR	44	-17	13	49	-26	-21	-58	67
	T1	21549	29	227	21550	197	489	-28187	28192
	E1	-45	0	-15	47	-21	-1	35	41
	E2	-3	0	-46	46	-34	15	4	37
	GR+T1	21593	11	240	21594	171	469	-28245	28250
	SEIS	48	0	61	77	54	16	39	69
	GR+T1+SEIS	21641	11	300	21643	225	485	28284	28290
A02 -	GR	44	-85	13	96	-29	-21	-49	61
	T1	21549	29	227	21550	149	489	-23662	23667
	E1	-37	0	-15	40	-17	-1	27	32
	E2	-3	0	-38	38	-25	15	3	30
	GR+T1	21593	-56	240	21594	120	469	-23711	23716
	SEIS	40	0	53	66	43	16	30	54
	GR+T1+SEIS	21633	56	292	21635	163	485	23741	23746
A02 +	GR	44	-137	13	144	-29	-21	-49	61
	T1	21549	29	227	21550	149	489	-23662	23667
	E1	-30	0	-15	34	-17	-1	27	32
	E2	-3	0	-31	31	-25	15	3	30
	GR+T1	21593	-108	240	21594	120	469	-23711	23716
	SEIS	34	0	46	57	43	16	30	54
	GR+T1+SEIS	21627	108	286	21629	163	485	23741	23746
A03 N	GR	44	-159	13	165	-35	-21	-28	49
	T1	21549	29	227	21550	37	489	-12959	12968
	E1	-28	0	-15	32	-10	-1	12	16
	E2	-3	0	-29	29	-10	15	2	19
	GR+T1	21593	-130	240	21595	1	469	-12987	12995
	SEIS	31	0	44	54	20	16	14	29
	GR+T1+SEIS	21624	130	283	21626	21	485	13000	13009

G L O B A L F O R C E S & M O M E N T S

Point name	Load combination	FORCES (lb) X	Y	Z	Result	MOMENTS (ft-lb) X	Y	Z	Result
A03 M-	GR	44	-188	13	193	-43	-18	42	62
	T1	21549	29	227	21550	-97	545	-268	615
	E1	-24	0	-15	29	-1	-5	-3	6
	E2	-3	0	-25	25	6	9	0	10
	GR+T1	21593	-159	240	21595	-140	527	-226	590
	SEIS	28	0	40	49	6	14	4	15
	GR+T1+SEIS	21620	159	280	21623	146	541	230	605
A03 M+	GR	44	128	13	136	-43	-18	42	62
	T1	21549	-1596	227	21609	-97	545	-268	615
	E1	-24	1	-15	29	-1	-5	-3	6
	E2	-3	1	-25	25	6	9	0	10
	GR+T1	21593	-1468	240	21644	-140	527	-226	590
	SEIS	28	2	40	49	6	14	4	15
	GR+T1+SEIS	21620	1470	280	21672	146	541	230	605
A03 F	GR	44	99	13	109	-46	-10	-14	49
	T1	21549	-1596	227	21609	-152	678	5932	5973
	E1	-21	1	-15	26	3	-14	-10	17
	E2	-3	1	-22	22	11	-5	-1	12
	GR+T1	21593	-1497	240	21646	-198	668	5918	5959
	SEIS	24	2	37	44	14	19	11	26
	GR+T1+SEIS	21617	1499	276	21671	213	687	5929	5973
A04 -	GR	44	79	13	91	-46	-4	-55	72
	T1	21549	-1596	227	21609	-152	782	6661	6708
	E1	-18	1	-15	24	3	-21	-10	23
	E2	-3	1	-19	19	11	-14	-2	18
	GR+T1	21593	-1518	240	21647	-198	778	6606	6655
	SEIS	22	2	34	41	14	35	12	39
	GR+T1+SEIS	21614	1519	274	21670	213	812	6618	6671
A04 +	GR	32	-19	9	38	0	-24	-62	67
	T1	19584	-1530	63	19644	-104	-3572	5396	6472
	E1	5	0	-15	16	8	21	4	23
	E2	0	2	10	11	-7	-19	3	21
	GR+T1	19617	-1549	72	19678	-104	-3596	5334	6434
	SEIS	6	2	26	27	15	41	7	44
	GR+T1+SEIS	19623	1550	98	19684	119	3636	5341	6462
A05	GR	32	-39	9	52	0	-19	-49	53
	T1	19584	-1530	63	19644	-104	-3543	6106	7060
	E1	8	0	-15	17	8	14	4	17
	E2	0	2	13	13	-7	-14	2	16
	GR+T1	19617	-1569	72	19680	-104	-3562	6057	7027
	SEIS	8	2	28	30	15	28	6	32
	GR+T1+SEIS	19625	1571	101	19688	119	3590	6063	7047

G L O B A L F O R C E S & M O M E N T S

Point name	Load combination	FORCES (lb) X	Y	Z	Result	MOMENTS (ft-lb) X	Y	Z	Result
A06	GR	32	-59	9	68	10	-9	-23	27
	T1	19584	-1530	63	19644	161	-177	5230	5236
	E1	10	0	-15	19	7	7	4	10
	E2	0	2	15	15	-6	-6	1	8
	GR+T1	19617	-1589	72	19681	171	-185	5207	5213
	SEIS	11	2	31	33	12	12	5	18
	GR+T1+SEIS	19628	1591	103	19692	183	198	5212	5219
A07 N	GR	32	-59	9	68	10	-9	-23	27
	T1	19584	-1530	63	19644	161	-177	5234	5239
	E1	10	0	-15	19	7	7	4	10
	E2	0	2	15	15	-6	-6	1	8
	GR+T1	19617	-1589	72	19681	171	-185	5210	5217
	SEIS	11	2	31	33	12	12	5	18
	GR+T1+SEIS	19628	1591	103	19692	183	198	5215	5222
A07 F	GR	32	-85	9	91	16	-2	4	17
	T1	19584	-1530	63	19644	209	-129	-8288	8292
	E1	13	0	-15	20	-5	-5	-5	9
	E2	0	2	18	18	7	7	-1	10
	GR+T1	19617	-1615	72	19683	225	-131	-8284	8289
	SEIS	14	2	34	37	12	12	6	18
	GR+T1+SEIS	19631	1616	106	19697	237	143	8290	8295
A08	GR	32	-89	9	95	18	-2	-2	18
	T1	19584	-1530	63	19644	221	-129	-12009	12012
	E1	14	0	-15	21	-8	-5	-8	12
	E2	0	2	19	19	11	7	-1	13
	GR+T1	19617	-1619	72	19684	239	-131	-12012	12015
	SEIS	14	2	34	37	19	12	9	24
	GR+T1+SEIS	19631	1621	107	19698	257	143	12020	12024
*** Segment A end ***									
*** Segment B begin ***									
A04	GR	11	97	4	98	-47	20	8	51
	T1	1965	-66	163	1973	-48	4354	1265	4534
	E1	-24	1	0	24	-5	-42	-14	45
	E2	-4	-1	-30	30	18	5	-4	19
	GR+T1	1976	31	167	1983	-94	4373	1272	4556
	SEIS	27	2	30	41	23	47	19	56
	GR+T1+SEIS	2003	33	197	2013	118	4420	1291	4607

G L O B A L F O R C E S & M O M E N T S

Point name	Load combination	FORCES (lb) X	Y	Z	Result	MOMENTS (ft-lb) X	Y	Z	Result
B01 N	GR	11	83	4	84	-4	15	3	15
	T1	1965	-66	163	1973	-4	3469	380	3490
	E1	-22	1	0	22	-4	-32	-4	32
	E2	-4	-1	-28	28	5	7	-3	9
	GR+T1	1976	17	167	1983	-8	3483	383	3504
	SEIS	26	2	28	38	9	38	7	40
	GR+T1+SEIS	2002	19	196	2011	17	3522	389	3543
B01 F	GR	11	71	4	72	38	9	0	39
	T1	1965	-66	163	1973	-4	2428	-41	2428
	E1	-21	1	0	21	-4	-20	1	21
	E2	-4	-1	-27	27	-2	9	-2	9
	GR+T1	1976	5	167	1983	33	2436	-40	2437
	SEIS	24	2	27	36	5	29	3	30
	GR+T1+SEIS	2000	7	194	2010	39	2465	43	2466
B02 -	GR	11	71	4	72	38	9	0	39
	T1	1965	-66	163	1973	-4	2424	-41	2424
	E1	-21	1	0	21	-4	-20	1	21
	E2	-4	-1	-27	27	-2	9	-2	9
	GR+T1	1976	5	167	1983	33	2432	-40	2433
	SEIS	24	2	27	36	5	29	3	30
	GR+T1+SEIS	2000	7	194	2010	39	2461	43	2462
B02 +	GR	11	23	4	26	38	9	0	39
	T1	1965	-66	163	1973	-4	2424	-41	2424
	E1	-15	1	0	15	-4	-20	1	21
	E2	-4	-1	-21	21	-2	9	-2	9
	GR+T1	1976	-43	167	1983	33	2432	-40	2433
	SEIS	19	2	21	28	5	29	3	30
	GR+T1+SEIS	1994	45	188	2004	39	2461	43	2462
B03	GR	11	8	4	14	49	1	0	49
	T1	1965	-66	163	1973	-48	1029	-80	1033
	E1	-13	1	0	13	-3	-10	1	11
	E2	-4	-1	-19	19	-3	11	-2	12
	GR+T1	1976	-59	167	1984	0	1029	-80	1032
	SEIS	17	2	19	26	6	22	3	23
	GR+T1+SEIS	1993	61	187	2002	6	1051	82	1054
B04 N	GR	11	-13	4	18	46	-10	0	47
	T1	1965	-66	163	1973	-110	-878	-102	890
	E1	-11	1	0	11	-2	1	1	2
	E2	-4	-1	-16	17	-4	15	-2	16
	GR+T1	1976	-79	167	1985	-65	-888	-102	896
	SEIS	14	2	17	22	6	16	3	17
	GR+T1+SEIS	1990	82	184	2000	70	904	105	913

G L O B A L F O R C E S & M O M E N T S

Point name	Load combination	FORCES (lb) X	Y	Z	Result	MOMENTS (ft-lb) X	Y	Z	Result
B04 F	GR	11	-39	4	40	29	-15	22	39
	T1	1965	-66	163	1973	-156	-2228	-98	2236
	E1	-8	1	0	8	-1	8	0	9
	E2	-4	-1	-13	14	-5	7	-1	8
	GR+T1	1976	-105	167	1986	-127	-2244	-76	2249
	SEIS	11	2	14	18	6	15	1	16
	GR+T1+SEIS	1987	107	181	1998	133	2259	77	2264
B05 -	GR	11	-79	4	80	29	-8	131	134
	T1	1965	-66	163	1973	-150	-1923	-44	1929
	E1	-3	1	0	3	-1	9	-2	9
	E2	-4	-1	-9	9	-5	-14	1	15
	GR+T1	1976	-145	167	1988	-121	-1931	87	1936
	SEIS	6	2	9	11	6	23	3	24
	GR+T1+SEIS	1982	147	176	1996	127	1953	90	1959
B05 +	GR	11	136	4	136	29	-8	131	134
	T1	1965	-280	163	1991	-150	-1923	-44	1929
	E1	-3	-8	0	9	-1	9	-2	9
	E2	-4	0	-9	9	-5	-14	1	15
	GR+T1	1976	-145	167	1988	-121	-1931	87	1936
	SEIS	6	8	9	14	6	23	3	24
	GR+T1+SEIS	1982	153	176	1996	127	1953	90	1959
B06 -	GR	11	89	4	89	29	2	-114	118
	T1	1965	-280	163	1991	-141	-1567	449	1636
	E1	3	-8	0	9	-1	10	16	19
	E2	-4	0	-3	5	-6	-26	1	27
	GR+T1	1976	-192	167	1992	-111	-1566	335	1605
	SEIS	7	8	3	11	6	36	17	40
	GR+T1+SEIS	1983	200	171	2000	118	1601	353	1644
B06 +	GR	-2	-1	-1	2	-72	20	-92	118
	T1	145	-9	-80	165	160	362	231	458
	E1	1	3	-2	4	10	-10	16	22
	E2	-1	0	-18	19	11	12	-1	16
	GR+T1	143	-10	-81	164	88	382	139	416
	SEIS	2	4	20	21	22	22	18	36
	GR+T1+SEIS	144	13	102	177	110	404	157	447
B07 -	GR	-2	-11	-1	11	-72	19	-89	116
	T1	145	-9	-80	165	159	325	234	430
	E1	2	3	-2	4	10	-11	15	21
	E2	-1	0	-17	17	11	3	-1	12
	GR+T1	143	-20	-81	165	87	344	145	383
	SEIS	3	4	19	20	22	14	16	31
	GR+T1+SEIS	146	24	100	178	109	358	161	408

G L O B A L F O R C E S & M O M E N T S

Point name	Load combination	FORCES (lb) X	Y	Z	Result	MOMENTS (ft-lb) X	Y	Z	Result
B07 +	GR	-2	-35	-1	35	-72	19	-89	116
	T1	145	-9	-80	165	159	325	234	430
	E1	5	3	-2	6	10	-11	15	21
	E2	-1	0	-14	14	11	3	-1	12
	GR+T1	143	-44	-81	170	87	344	145	383
	SEIS	6	4	16	18	22	14	16	31
	GR+T1+SEIS	148	48	97	184	109	358	161	408
B08 -	GR	-2	-53	-1	54	-72	19	-81	110
	T1	145	-9	-80	165	159	310	235	420
	E1	7	3	-2	8	10	-11	14	21
	E2	-1	0	-12	12	11	1	-1	11
	GR+T1	143	-62	-81	176	87	329	155	374
	SEIS	8	4	14	16	22	12	16	29
	GR+T1+SEIS	151	66	95	190	109	342	170	397
B08 +	GR	-2	-77	-1	78	-72	19	-81	110
	T1	145	-9	-80	165	159	310	235	420
	E1	10	3	-2	11	10	-11	14	21
	E2	-1	0	-9	9	11	1	-1	11
	GR+T1	143	-86	-81	185	87	329	155	374
	SEIS	11	4	11	16	22	12	16	29
	GR+T1+SEIS	153	90	92	200	109	342	170	397
B09 N	GR	-2	-78	-1	78	-72	19	-81	110
	T1	145	-9	-80	165	159	310	235	420
	E1	10	3	-2	11	10	-11	14	21
	E2	-1	0	-9	9	11	1	-1	11
	GR+T1	143	-86	-81	185	87	329	155	374
	SEIS	11	4	11	16	22	12	16	29
	GR+T1+SEIS	153	90	92	200	109	341	170	397
B09 F	GR	-2	-103	-1	103	-73	18	-14	76
	T1	145	-9	-80	165	99	250	134	300
	E1	13	3	-2	14	9	-13	3	16
	E2	-1	0	-6	6	6	-5	-1	8
	GR+T1	143	-112	-81	198	26	268	119	295
	SEIS	14	4	8	16	15	18	4	24
	GR+T1+SEIS	157	115	89	214	41	286	123	314
B10 N	GR	-2	-110	-1	110	-73	18	-14	77
	T1	145	-9	-80	165	73	250	87	275
	E1	14	3	-2	14	8	-13	-2	15
	E2	-1	0	-5	6	4	-5	-1	7
	GR+T1	143	-118	-81	202	0	268	74	278
	SEIS	15	4	7	17	12	18	2	22
	GR+T1+SEIS	157	122	88	218	12	286	76	297

G L O B A L F O R C E S & M O M E N T S

Point name	Load combination	FORCES (lb) X	Y	Z	Result	MOMENTS (ft-lb) X	Y	Z	Result
B10 F	GR	-2	-135	-1	135	-7	17	54	57
	T1	145	-9	-80	165	18	284	-16	285
	E1	17	3	-2	17	5	-5	-14	16
	E2	-1	0	-2	3	0	-8	0	8
	GR+T1	143	-144	-81	218	11	301	38	304
	SEIS	18	4	4	19	6	13	15	20
	GR+T1+SEIS	160	147	85	234	16	314	53	319
B11 N	GR	-2	-135	-1	135	-7	17	55	57
	T1	145	-9	-80	165	18	284	-16	285
	E1	17	3	-2	17	5	-5	-14	16
	E2	-1	0	-2	3	0	-8	0	8
	GR+T1	143	-144	-81	218	11	301	38	304
	SEIS	18	4	4	19	6	13	15	20
	GR+T1+SEIS	160	147	85	234	16	314	53	319
B11 F	GR	-2	-148	-1	148	68	16	85	110
	T1	145	-9	-80	165	23	343	-14	344
	E1	18	3	-2	19	3	4	-15	16
	E2	-1	0	-1	1	0	-9	0	9
	GR+T1	143	-156	-81	227	91	359	71	377
	SEIS	19	4	3	20	4	12	15	20
	GR+T1+SEIS	162	160	84	243	94	371	86	392
B12 -	GR	-2	-153	-1	153	107	15	85	138
	T1	145	-9	-80	165	25	381	-14	382
	E1	19	3	-2	19	3	8	-15	18
	E2	-1	0	0	1	0	-9	0	9
	GR+T1	143	-162	-81	231	132	396	71	423
	SEIS	20	4	2	20	3	17	15	23
	GR+T1+SEIS	163	165	83	246	135	413	86	443
B12 +	GR	-2	102	-1	102	107	15	85	138
	T1	93	27	-26	100	25	381	-14	382
	E1	19	7	-2	20	3	8	-15	18
	E2	-1	0	0	1	0	-9	0	9
	GR+T1	91	129	-27	160	132	396	71	423
	SEIS	20	7	2	21	3	17	15	23
	GR+T1+SEIS	111	136	29	178	135	413	86	443
B13 -	GR	-2	97	-1	97	82	15	85	119
	T1	93	27	-26	100	18	404	-14	405
	E1	20	7	-2	21	1	13	-15	20
	E2	-1	0	0	1	0	-9	0	9
	GR+T1	91	123	-27	156	100	419	71	436
	SEIS	21	7	2	22	1	22	15	27
	GR+T1+SEIS	112	131	29	174	101	441	86	461

G L O B A L F O R C E S & M O M E N T S

Point name	Load combination	FORCES (lb) X	Y	Z	Result	MOMENTS (ft-lb) X	Y	Z	Result
B13 +	GR	-2	62	-1	62	82	15	85	119
	T1	93	27	-26	100	18	404	-14	405
	E1	24	7	-2	25	1	13	-15	20
	E2	-1	0	5	5	0	-9	0	9
	GR+T1	91	88	-27	130	100	419	71	436
	SEIS	25	7	6	27	1	22	15	27
	GR+T1+SEIS	116	96	33	154	101	441	86	461
B14 -	GR	-2	62	-1	62	43	14	85	96
	T1	93	27	-26	100	5	451	-14	451
	E1	24	7	-2	25	-3	24	-15	29
	E2	-1	0	5	5	0	-9	0	9
	GR+T1	91	88	-27	130	48	464	71	472
	SEIS	25	7	6	27	3	34	15	37
	GR+T1+SEIS	116	96	33	154	50	498	86	508
B14 +	GR	-2	38	-1	38	43	14	85	96
	T1	93	27	-26	100	5	451	-14	451
	E1	27	7	-2	28	-3	24	-15	29
	E2	-1	0	7	8	0	-9	0	9
	GR+T1	91	64	-27	115	48	464	71	472
	SEIS	28	7	9	30	3	34	15	37
	GR+T1+SEIS	119	72	36	143	50	498	86	508
B15 N	GR	-2	37	-1	37	42	14	85	96
	T1	93	27	-26	100	5	451	-14	452
	E1	27	7	-2	28	-3	24	-15	29
	E2	-1	0	8	8	0	-9	0	9
	GR+T1	91	64	-27	115	47	465	71	473
	SEIS	28	7	9	30	3	34	15	37
	GR+T1+SEIS	119	71	36	143	50	499	86	509
B15 F	GR	-2	25	-1	25	26	13	91	96
	T1	93	27	-26	100	-10	507	-9	507
	E1	28	7	-2	29	-7	39	-14	42
	E2	-1	0	9	9	0	-12	0	12
	GR+T1	91	51	-27	108	16	519	83	526
	SEIS	29	7	11	32	7	51	14	53
	GR+T1+SEIS	121	59	38	139	23	571	97	579
B16	GR	-2	25	-1	25	26	13	91	96
	T1	93	27	-26	100	-10	507	-9	507
	E1	28	7	-2	29	-7	39	-14	42
	E2	-1	0	9	9	0	-12	0	12
	GR+T1	91	51	-27	108	16	520	83	526
	SEIS	29	7	11	32	7	51	14	53
	GR+T1+SEIS	121	59	38	139	23	571	97	579

*** Segment B end ***

G L O B A L F O R C E S & M O M E N T S

Point name	Load combination	FORCES (lb) X	Y	Z	Result	MOMENTS (ft-lb) X	Y	Z	Result
*** Segment C begin ***									
B06	GR	13	90	5	91	101	-18	-22	105
	T1	1820	-272	243	1856	-300	-1929	218	1965
	E1	2	-11	2	12	-11	20	0	23
	E2	-3	0	16	16	-17	-38	3	42
	GR+T1	1833	-182	249	1859	-199	-1948	196	1968
	SEIS	5	12	18	22	28	58	3	64
	GR+T1+SEIS	1838	193	266	1867	227	2005	199	2028
C01 N	GR	13	67	5	69	25	-4	-53	58
	T1	1820	-272	243	1856	-35	-59	323	330
	E1	5	-11	2	13	0	24	4	24
	E2	-3	0	18	18	-17	-34	3	38
	GR+T1	1833	-204	249	1861	-11	-63	270	278
	SEIS	8	12	20	25	17	58	7	61
	GR+T1+SEIS	1841	216	269	1873	28	121	277	304
C01 F	GR	13	55	5	56	5	3	-80	81
	T1	1820	-272	243	1856	50	629	451	775
	E1	6	-11	2	13	4	27	9	28
	E2	-3	0	20	20	-17	-26	3	31
	GR+T1	1833	-217	249	1863	55	632	370	734
	SEIS	9	12	22	26	20	53	12	58
	GR+T1+SEIS	1842	229	271	1876	75	684	382	788
C02 -	GR	13	51	5	53	5	4	-89	89
	T1	1820	-272	243	1856	50	670	496	836
	E1	7	-11	2	13	4	27	11	29
	E2	-3	0	20	20	-17	-23	3	28
	GR+T1	1833	-221	249	1863	55	674	407	790
	SEIS	10	12	22	27	20	50	14	56
	GR+T1+SEIS	1843	232	271	1877	76	724	421	841
C02 +	GR	13	51	5	53	5	4	-89	89
	T1	1820	-272	243	1856	50	670	496	836
	E1	7	-11	2	13	4	27	11	29
	E2	-3	0	20	20	-17	-23	3	28
	GR+T1	1833	-221	249	1863	55	674	407	790
	SEIS	10	12	22	27	20	50	14	56
	GR+T1+SEIS	1843	232	271	1877	76	724	421	841

G L O B A L F O R C E S & M O M E N T S

Point name	Load combination	FORCES (lb) X	Y	Z	Result	MOMENTS (ft-lb) X	Y	Z	Result
C03 -	GR	13	33	5	36	5	5	-97	97
	T1	1820	-272	243	1856	50	714	545	900
	E1	9	-11	2	15	4	27	13	31
	E2	-3	0	22	23	-17	-19	3	26
	GR+T1	1833	-239	249	1865	55	719	449	849
	SEIS	12	12	24	30	20	46	16	53
	GR+T1+SEIS	1845	251	273	1882	76	765	465	899
C03 +	GR	13	33	5	36	5	5	-97	97
	T1	1820	-272	243	1856	50	714	545	900
	E1	9	-11	2	15	4	27	13	31
	E2	-3	0	22	23	-17	-19	3	26
	GR+T1	1833	-239	249	1865	55	719	449	849
	SEIS	12	12	24	30	20	46	16	53
	GR+T1+SEIS	1845	251	273	1882	76	765	465	899
C04	GR	13	32	5	35	5	5	-97	97
	T1	1820	-272	243	1856	50	718	550	906
	E1	9	-11	2	15	4	27	13	31
	E2	-3	0	22	23	-17	-19	3	25
	GR+T1	1833	-239	249	1865	55	723	453	855
	SEIS	12	12	24	30	20	46	16	53
	GR+T1+SEIS	1845	251	273	1882	76	769	469	904
C05 -	GR	13	23	5	27	5	7	-109	110
	T1	1820	-272	243	1856	50	827	672	1067
	E1	10	-11	2	15	4	28	19	34
	E2	-3	0	24	24	-17	-8	3	19
	GR+T1	1833	-249	249	1867	55	834	562	1008
	SEIS	13	12	26	31	20	37	22	47
	GR+T1+SEIS	1846	261	274	1885	76	871	584	1051
C05 +	GR	14	-19	13	27	-8	-13	-97	98
	T1	1520	-550	836	1820	-698	-170	-33	720
	E1	28	-6	-10	30	12	18	18	28
	E2	8	-6	30	31	-34	-36	-7	50
	GR+T1	1534	-569	849	1844	-706	-183	-130	741
	SEIS	36	12	40	55	46	54	26	75
	GR+T1+SEIS	1570	581	889	1896	752	237	155	804
C06 -	GR	14	-29	13	35	-8	-7	-86	87
	T1	1520	-550	836	1820	-698	202	212	757
	E1	29	-6	-10	31	12	13	21	28
	E2	8	-6	31	33	-34	-23	-4	41
	GR+T1	1534	-579	849	1847	-706	195	126	743
	SEIS	37	12	41	57	46	36	25	64
	GR+T1+SEIS	1571	591	890	1900	752	231	151	801

G L O B A L F O R C E S & M O M E N T S

Point name	Load combination	FORCES (lb) X	Y	Z	Result	MOMENTS (ft-lb) X	Y	Z	Result
C06 +	GR	14	-53	13	56	-8	-7	-86	87
	T1	1520	-550	836	1820	-698	202	212	757
	E1	32	-6	-10	34	12	13	21	28
	E2	8	-6	34	35	-34	-23	-4	41
	GR+T1	1534	-603	849	1854	-706	195	126	743
	SEIS	40	12	44	61	46	36	25	64
	GR+T1+SEIS	1574	615	893	1911	752	231	151	801
C07 -	GR	14	-71	13	73	-8	-5	-75	76
	T1	1520	-550	836	1820	-698	353	311	842
	E1	34	-6	-10	36	12	11	22	28
	E2	8	-6	36	37	-34	-17	-3	38
	GR+T1	1534	-621	849	1860	-706	348	236	822
	SEIS	42	12	46	64	46	28	25	60
	GR+T1+SEIS	1576	633	896	1920	752	376	261	880
C07 +	GR	14	-95	13	97	-8	-5	-75	76
	T1	1520	-550	836	1820	-698	353	311	842
	E1	37	-6	-10	39	12	11	22	28
	E2	8	-6	39	40	-34	-17	-3	38
	GR+T1	1534	-645	849	1868	-706	348	236	822
	SEIS	45	12	49	68	46	28	25	60
	GR+T1+SEIS	1579	657	898	1932	752	376	261	880
C08 N	GR	14	-103	13	105	-8	0	-36	36
	T1	1520	-550	836	1820	-698	685	530	1112
	E1	38	-6	-10	40	12	7	24	28
	E2	8	-6	40	41	-34	-1	-1	34
	GR+T1	1534	-654	849	1871	-706	685	494	1101
	SEIS	46	12	50	69	46	8	25	53
	GR+T1+SEIS	1580	665	899	1936	752	693	519	1147
C08 F	GR	14	-129	13	130	2	10	38	39
	T1	1520	-550	836	1820	-71	1312	-197	1328
	E1	41	-6	-10	42	5	-1	-1	5
	E2	8	-6	43	44	-3	30	-2	30
	GR+T1	1534	-679	849	1880	-69	1322	-159	1333
	SEIS	49	12	53	73	7	30	4	31
	GR+T1+SEIS	1583	691	902	1949	76	1352	163	1364
C09 N	GR	14	-130	13	132	3	10	37	38
	T1	1520	-550	836	1820	-4	1312	-320	1350
	E1	41	-6	-10	43	4	-1	-5	6
	E2	8	-6	43	44	1	30	-3	30
	GR+T1	1534	-681	849	1881	0	1322	-283	1352
	SEIS	49	12	53	74	5	30	8	32
	GR+T1+SEIS	1583	692	903	1950	5	1352	291	1383

G L O B A L F O R C E S & M O M E N T S

Point name	Load combination	FORCES (lb) X	Y	Z	Result	MOMENTS (ft-lb) X	Y	Z	Result
C09 F	GR	14	-156	13	157	-96	0	26	100
	T1	1520	-550	836	1820	210	172	-1460	1485
	E1	44	-6	-10	46	-8	-33	-36	49
	E2	8	-6	46	47	30	24	-9	39
	GR+T1	1534	-706	849	1890	114	172	-1434	1449
	SEIS	52	12	56	78	38	56	45	82
	GR+T1+SEIS	1586	718	906	1963	152	228	1479	1504
C10	GR	14	-156	13	158	-102	-1	26	105
	T1	1520	-550	836	1820	192	120	-1460	1477
	E1	44	-6	-10	46	-8	-34	-36	50
	E2	8	-6	46	47	29	23	-9	39
	GR+T1	1534	-707	849	1891	90	120	-1434	1442
	SEIS	52	12	56	78	38	58	45	82
	GR+T1+SEIS	1586	719	906	1963	128	177	1479	1495
C11 -	GR	14	-166	13	167	-173	-7	26	175
	T1	1520	-550	836	1820	-51	-550	-1460	1561
	E1	45	-6	-10	47	-11	-54	-36	66
	E2	8	-6	47	49	27	20	-9	34
	GR+T1	1534	-716	849	1894	-224	-558	-1434	1555
	SEIS	53	12	58	79	37	74	45	94
	GR+T1+SEIS	1587	728	907	1968	261	631	1479	1629
C11 +	GR	15	-190	14	191	-151	-8	24	153
	T1	1474	-839	937	1938	-165	-441	-1306	1388
	E1	57	-4	-10	58	-10	-47	-61	78
	E2	8	-26	69	74	66	19	-9	69
	GR+T1	1489	-1029	951	2045	-317	-448	-1281	1394
	SEIS	65	30	79	107	76	66	70	123
	GR+T1+SEIS	1555	1059	1030	2145	392	514	1352	1498
C12	GR	15	-200	14	201	-243	-14	24	245
	T1	1474	-839	937	1938	-562	-1137	-1306	1821
	E1	58	-4	-10	59	-12	-75	-61	97
	E2	8	-26	70	75	54	15	-9	56
	GR+T1	1489	-1040	951	2050	-806	-1152	-1281	1902
	SEIS	67	30	80	108	66	90	70	131
	GR+T1+SEIS	1556	1070	1031	2151	871	1242	1352	2032

*** Segment C end ***

*** Segment D begin ***

G L O B A L F O R C E S & M O M E N T S

Point name	Load combination	FORCES (lb) X	Y	Z	Result	MOMENTS (ft-lb) X	Y	Z	Result
C11	GR	0	24	-1	24	-22	0	2	22
	T1	45	289	-101	310	114	-110	-154	221
	E1	-12	-1	0	12	-1	-7	25	26
	E2	0	20	-21	29	-39	1	0	39
	GR+T1	45	313	-102	332	93	-109	-152	209
	SEIS	12	21	21	32	40	7	25	48
	GR+T1+SEIS	57	334	123	361	133	117	178	251
D01 N	GR	0	-33	-1	33	-20	0	1	20
	T1	45	289	-101	310	384	-110	-33	401
	E1	-5	-1	0	5	-1	-7	2	7
	E2	0	20	-14	24	9	1	0	9
	GR+T1	45	256	-102	279	364	-109	-32	382
	SEIS	5	21	15	26	10	7	3	12
	GR+T1+SEIS	50	277	116	304	374	117	35	393
D01 F	GR	0	-58	-1	58	17	0	1	17
	T1	45	289	-101	310	243	-76	1	255
	E1	-2	-1	0	2	0	-9	-1	9
	E2	0	20	-11	23	4	1	0	4
	GR+T1	45	231	-102	256	261	-76	1	271
	SEIS	2	21	11	24	4	10	1	11
	GR+T1+SEIS	47	251	113	280	265	85	2	278
D02 -	GR	0	-72	-1	72	57	0	1	57
	T1	45	289	-101	310	66	-48	1	81
	E1	0	-1	0	1	1	-10	-1	10
	E2	0	20	-10	22	-8	1	0	8
	GR+T1	45	217	-102	244	123	-48	1	132
	SEIS	1	21	10	23	9	10	1	14
	GR+T1+SEIS	45	238	112	267	132	58	2	144
D02 +	GR	0	74	-1	74	57	0	1	57
	T1	45	144	-101	182	66	-48	1	81
	E1	0	0	0	1	1	-10	-1	10
	E2	0	-2	-10	10	-8	1	0	8
	GR+T1	45	217	-102	244	123	-48	1	132
	SEIS	1	2	10	10	9	10	1	14
	GR+T1+SEIS	45	220	112	251	132	58	2	144
D03 -	GR	0	29	-1	29	-50	-1	1	50
	T1	45	144	-101	182	-237	48	1	242
	E1	5	0	0	5	0	-5	-1	5
	E2	0	-2	-4	5	-4	0	0	4
	GR+T1	45	172	-102	205	-287	47	1	291
	SEIS	5	2	4	7	4	5	1	7
	GR+T1+SEIS	50	174	106	210	291	52	2	296

G L O B A L F O R C E S & M O M E N T S

Point name	Load combination	FORCES (lb) X	Y	Z	Result	MOMENTS (ft-lb) X	Y	Z	Result
D03 +	GR	0	-30	-1	30	-50	-1	1	50
	T1	45	144	-101	182	-237	48	1	242
	E1	12	0	0	12	0	-5	-1	5
	E2	0	-2	3	3	-4	0	0	4
	GR+T1	45	113	-102	159	-287	47	1	291
	SEIS	12	2	3	13	4	5	1	7
	GR+T1+SEIS	57	115	105	166	291	52	2	296
D04 -	GR	0	-30	-1	30	-44	-1	1	44
	T1	45	144	-101	182	-309	70	1	317
	E1	12	0	0	12	0	0	-1	1
	E2	0	-2	3	3	-3	0	0	3
	GR+T1	45	113	-102	159	-352	69	1	359
	SEIS	12	2	3	13	3	0	1	3
	GR+T1+SEIS	57	115	105	166	356	70	2	363
D04 +	GR	0	-54	-1	54	-44	-1	1	44
	T1	45	144	-101	182	-309	70	1	317
	E1	15	0	0	15	0	0	-1	1
	E2	0	-2	6	6	-3	0	0	3
	GR+T1	45	89	-102	143	-352	69	1	359
	SEIS	15	2	6	16	3	0	1	3
	GR+T1+SEIS	60	91	107	153	356	70	2	363
D05 N	GR	0	-60	-1	60	-30	-1	1	30
	T1	45	144	-101	182	-345	82	1	354
	E1	16	0	0	16	0	4	-1	4
	E2	0	-2	6	6	-3	0	0	3
	GR+T1	45	84	-102	139	-374	80	1	383
	SEIS	16	2	6	17	3	4	1	5
	GR+T1+SEIS	61	86	108	151	377	84	2	386
D05 F	GR	0	-85	-1	85	22	-1	1	22
	T1	45	144	-101	182	-528	116	-33	542
	E1	19	0	0	19	0	16	-14	21
	E2	0	-2	9	9	5	0	0	5
	GR+T1	45	59	-102	126	-506	114	-32	520
	SEIS	19	2	9	21	5	17	14	22
	GR+T1+SEIS	64	61	111	142	511	131	47	530
D06 -	GR	0	-85	-1	85	22	-1	1	22
	T1	45	144	-101	182	-528	116	-33	542
	E1	19	0	0	19	0	16	-14	21
	E2	0	-2	9	9	5	0	0	5
	GR+T1	45	59	-102	126	-507	114	-33	520
	SEIS	19	2	9	21	5	17	14	22
	GR+T1+SEIS	64	61	111	142	512	131	47	530

G L O B A L F O R C E S & M O M E N T S

Point name	Load combination	FORCES (lb) X	Y	Z	Result	MOMENTS (ft-lb) X	Y	Z	Result
D06 +	GR	0	-109	-1	109	22	-1	1	22
	T1	45	144	-101	182	-528	116	-33	542
	E1	22	0	0	22	0	16	-14	21
	E2	0	-2	12	12	5	0	0	5
	GR+T1	45	35	-102	117	-507	114	-33	520
	SEIS	22	2	12	25	5	17	14	22
	GR+T1+SEIS	67	37	114	137	512	131	47	530
D07	GR	0	-127	-1	127	22	-1	1	22
	T1	45	144	-101	182	-547	116	-42	560
	E1	24	0	0	24	0	16	-18	24
	E2	0	-2	14	14	7	0	0	7
	GR+T1	45	16	-102	113	-525	114	-41	539
	SEIS	24	2	14	28	7	17	18	26
	GR+T1+SEIS	69	19	116	136	532	131	59	551
*** Segment D end ***									
*** Segment E begin ***									
C05	GR	-1	42	-8	43	12	20	-13	27
	T1	301	279	-593	721	749	997	705	1433
	E1	-17	-6	12	22	-9	11	0	14
	E2	-11	6	-6	14	17	28	10	34
	GR+T1	299	320	-601	744	761	1018	692	1447
	SEIS	28	12	18	36	26	39	10	48
	GR+T1+SEIS	328	332	619	775	787	1057	702	1493
E01 N	GR	-1	29	-8	31	-8	20	-13	25
	T1	301	279	-593	721	589	1170	705	1487
	E1	-16	-6	12	21	-5	1	0	5
	E2	-11	6	-5	13	14	22	10	28
	GR+T1	299	308	-601	738	580	1190	692	1494
	SEIS	27	12	17	34	19	23	10	32
	GR+T1+SEIS	326	320	618	768	599	1213	702	1524
E01 F	GR	-1	21	-8	22	-17	18	-16	30
	T1	301	279	-593	721	490	1190	664	1448
	E1	-15	-6	12	20	-3	-2	1	4
	E2	-11	6	-4	13	12	17	9	23
	GR+T1	299	300	-601	735	473	1208	648	1450
	SEIS	26	12	16	33	15	20	10	27
	GR+T1+SEIS	325	311	617	763	488	1227	658	1476

G L O B A L F O R C E S & M O M E N T S

Point name	Load combination	FORCES (lb) X	Y	Z	Result	MOMENTS (ft-lb) X	Y	Z	Result
E02 N	GR	-1	-5	-8	9	-24	10	-23	35
	T1	301	279	-593	721	255	942	428	1066
	E1	-12	-6	12	18	2	-3	6	7
	E2	-11	6	-1	12	7	6	4	10
	GR+T1	299	274	-601	725	231	953	405	1061
	SEIS	23	12	13	29	8	10	10	16
	GR+T1+SEIS	322	286	614	749	239	962	415	1075
E02 F	GR	-1	-13	-8	15	-23	7	-20	31
	T1	301	279	-593	721	214	777	330	871
	E1	-11	-6	12	17	2	-1	8	8
	E2	-11	6	0	12	6	5	2	8
	GR+T1	299	266	-601	722	191	784	310	865
	SEIS	22	12	13	28	8	5	10	14
	GR+T1+SEIS	321	277	613	746	199	790	320	875
E03	GR	-1	-17	-8	18	-23	6	-18	30
	T1	301	279	-593	721	214	681	285	769
	E1	-10	-6	12	17	2	1	9	9
	E2	-11	6	1	12	6	5	1	8
	GR+T1	299	262	-601	720	191	687	267	762
	SEIS	21	12	13	28	8	6	10	14
	GR+T1+SEIS	321	274	614	745	199	693	277	773
E04	GR	-1	-72	-8	73	-23	-14	98	101
	T1	301	279	-593	721	214	-857	-438	986
	E1	-4	-6	12	14	2	33	24	41
	E2	-11	6	7	15	6	15	-14	22
	GR+T1	299	206	-601	702	191	-872	-341	955
	SEIS	15	12	20	27	8	48	38	62
	GR+T1+SEIS	314	218	620	729	199	920	378	1015
*** Segment E end ***									
*** Segment F begin ***									
E04	GR	-1	33	-9	34	-108	-13	47	118
	T1	49	618	-839	1043	348	-895	-499	1082
	E1	-24	1	4	24	9	26	6	28
	E2	0	3	1	4	25	15	-4	29
	GR+T1	48	651	-848	1070	240	-908	-452	1042
	SEIS	24	4	6	25	34	41	10	54
	GR+T1+SEIS	72	654	853	1078	273	949	462	1090

G L O B A L F O R C E S & M O M E N T S

Point name	Load combination	FORCES (lb) X	Y	Z	Result	MOMENTS (ft-lb) X	Y	Z	Result
F01 -	GR	-1	23	-9	24	-121	-14	47	130
	T1	49	618	-839	1043	58	-872	-499	1006
	E1	-23	1	4	23	9	15	6	18
	E2	0	3	3	4	23	15	-4	28
	GR+T1	48	640	-848	1064	-63	-886	-452	996
	SEIS	23	4	7	24	32	30	10	45
	GR+T1+SEIS	70	644	854	1072	94	915	462	1030
F01 +	GR	-1	-1	-9	9	-121	-14	47	130
	T1	49	618	-839	1043	58	-872	-499	1006
	E1	-20	1	4	20	9	15	6	18
	E2	0	3	6	6	23	15	-4	28
	GR+T1	48	616	-848	1049	-63	-886	-452	996
	SEIS	20	4	10	22	32	30	10	45
	GR+T1+SEIS	68	620	857	1060	94	915	462	1030
F02 -	GR	-1	-20	-9	21	-119	-14	47	129
	T1	49	618	-839	1043	-53	-863	-499	998
	E1	-18	1	4	18	8	11	6	15
	E2	0	3	8	8	23	15	-4	28
	GR+T1	48	598	-848	1039	-172	-877	-452	1002
	SEIS	18	4	12	22	31	26	10	42
	GR+T1+SEIS	65	602	860	1051	203	903	462	1035
F02 +	GR	-1	-44	-9	44	-119	-14	47	129
	T1	49	618	-839	1043	-53	-863	-499	998
	E1	-15	1	4	15	8	11	6	15
	E2	0	3	11	11	23	15	-4	28
	GR+T1	48	574	-848	1025	-172	-877	-452	1002
	SEIS	15	4	15	21	31	26	10	42
	GR+T1+SEIS	62	578	862	1040	203	903	462	1035
F03	GR	-1	-63	-9	63	-72	-15	47	87
	T1	49	618	-839	1043	-599	-820	-499	1131
	E1	-12	1	4	13	8	-1	6	10
	E2	0	3	13	13	20	15	-4	25
	GR+T1	48	555	-848	1014	-671	-835	-452	1163
	SEIS	12	4	17	21	28	16	10	33
	GR+T1+SEIS	60	559	865	1031	699	850	462	1194
F04 N	GR	-1	-68	-9	69	-56	-15	47	74
	T1	49	618	-839	1043	-755	-807	-499	1213
	E1	-12	1	4	12	8	-4	6	10
	E2	0	3	14	14	19	15	-4	25
	GR+T1	48	550	-848	1012	-811	-823	-452	1241
	SEIS	12	4	18	22	27	19	10	34
	GR+T1+SEIS	60	554	865	1029	838	841	462	1274

G L O B A L F O R C E S & M O M E N T S

Point name	Load combination	FORCES (lb) X	Y	Z	Result	MOMENTS (ft-lb) X	Y	Z	Result
F04 F	GR	-1	-93	-9	94	9	-16	46	49
	T1	49	618	-839	1043	-589	-771	-462	1075
	E1	-9	1	4	10	4	-12	-1	12
	E2	0	3	17	17	5	15	-4	16
	GR+T1	48	525	-848	998	-581	-787	-417	1063
	SEIS	9	4	21	23	9	26	6	29
	GR+T1+SEIS	57	528	868	1018	590	813	422	1090
F05 N	GR	-1	-116	-9	117	18	-16	45	51
	T1	49	618	-839	1043	307	-771	-410	926
	E1	-6	1	4	7	0	-12	-9	15
	E2	0	3	19	20	-14	15	-4	21
	GR+T1	48	502	-848	986	326	-787	-366	927
	SEIS	6	4	23	25	14	26	13	33
	GR+T1+SEIS	54	505	871	1009	340	813	379	960
F05 F	GR	-1	-141	-9	142	25	-10	-55	61
	T1	49	618	-839	1043	937	-142	90	951
	E1	-3	1	4	5	-3	-15	-12	19
	E2	0	3	22	23	-30	-1	-2	30
	GR+T1	48	476	-848	973	961	-151	34	974
	SEIS	3	4	26	27	33	16	14	39
	GR+T1+SEIS	51	480	874	999	994	167	49	1009
F06 -	GR	-1	-150	-9	151	25	-6	-116	119
	T1	49	618	-839	1043	937	208	347	1020
	E1	-2	1	4	4	-3	-16	-12	21
	E2	0	3	23	24	-30	-11	-1	31
	GR+T1	48	467	-848	969	961	202	231	1009
	SEIS	2	4	28	28	33	27	13	44
	GR+T1+SEIS	50	471	875	995	994	229	244	1049
F06 +	GR	-1	152	-9	153	25	-6	-116	119
	T1	49	315	-839	897	937	208	347	1020
	E1	-2	13	4	14	-3	-16	-12	21
	E2	0	8	23	25	-30	-11	-1	31
	GR+T1	48	467	-848	969	961	202	231	1009
	SEIS	2	21	28	35	33	27	13	44
	GR+T1+SEIS	50	488	875	1003	994	229	244	1049
F07 -	GR	-1	147	-9	147	25	-4	-78	81
	T1	49	315	-839	897	937	424	428	1114
	E1	-1	13	4	14	-3	-17	-9	20
	E2	0	8	24	25	-30	-17	1	34
	GR+T1	48	462	-848	966	961	421	351	1106
	SEIS	1	21	28	35	33	34	10	48
	GR+T1+SEIS	49	483	876	1001	994	455	361	1151

G L O B A L F O R C E S & M O M E N T S

Point name	Load combination	FORCES (lb) X	Y	Z	Result	MOMENTS (ft-lb) X	Y	Z	Result
F07 +	GR	-1	88	-9	88	25	-4	-78	81
	T1	49	315	-839	897	937	424	428	1114
	E1	6	13	4	15	-3	-17	-9	20
	E2	0	8	31	32	-30	-17	1	34
	GR+T1	48	403	-848	940	961	421	351	1106
	SEIS	6	21	35	41	33	34	10	48
	GR+T1+SEIS	54	424	883	981	994	455	361	1151
F08	GR	-1	88	-9	88	25	1	-25	35
	T1	49	315	-839	897	937	844	586	1390
	E1	6	13	4	15	-3	-19	-2	20
	E2	0	8	31	32	-30	-31	5	43
	GR+T1	48	403	-848	940	961	844	561	1397
	SEIS	6	21	35	41	33	51	7	61
	GR+T1+SEIS	54	424	883	981	994	895	568	1453
F09 N	GR	-1	87	-9	88	25	1	-22	33
	T1	49	315	-839	897	937	874	597	1414
	E1	6	13	4	15	-3	-20	-2	20
	E2	0	8	31	32	-30	-32	5	44
	GR+T1	48	402	-848	939	961	875	576	1422
	SEIS	6	21	35	41	33	52	7	62
	GR+T1+SEIS	54	423	883	981	994	927	583	1479
F09 F	GR	-1	82	-9	82	30	3	-1	30
	T1	49	315	-839	897	958	1080	676	1594
	E1	7	13	4	15	-2	-21	2	21
	E2	0	8	32	33	-29	-40	7	50
	GR+T1	48	396	-848	937	988	1083	675	1614
	SEIS	7	21	36	42	31	61	9	70
	GR+T1+SEIS	55	417	884	979	1019	1145	684	1678
F10	GR	-1	80	-9	81	33	4	4	33
	T1	49	315	-839	897	968	1128	694	1640
	E1	7	13	4	15	-2	-22	2	22
	E2	0	8	32	33	-29	-42	8	52
	GR+T1	48	395	-848	936	1001	1132	698	1665
	SEIS	7	21	36	42	31	64	10	71
	GR+T1+SEIS	55	416	884	978	1032	1195	708	1731

*** Segment F end ***

*** Segment G begin ***

G L O B A L F O R C E S & M O M E N T S

Point name	Load combination	FORCES (lb) X	Y	Z	Result	MOMENTS (ft-lb) X	Y	Z	Result
E04	GR	0	-105	1	105	85	-1	51	99
	T1	252	-339	246	489	-134	37	61	151
	E1	20	-6	8	23	-6	7	18	20
	E2	-11	3	6	13	-19	0	-10	21
	GR+T1	251	-444	247	567	-49	36	112	127
	SEIS	31	9	14	35	25	8	28	38
	GR+T1+SEIS	282	453	261	594	74	44	139	164
G01 N	GR	0	-115	1	115	33	-1	51	61
	T1	252	-339	246	489	-293	-81	61	310
	E1	21	-6	8	24	-9	-2	18	20
	E2	-11	3	7	13	-18	5	-10	21
	GR+T1	251	-454	247	575	-259	-82	112	294
	SEIS	32	9	15	37	27	8	28	39
	GR+T1+SEIS	284	463	262	603	286	89	139	331
G01 F	GR	0	-132	1	132	-28	-1	-12	30
	T1	252	-339	246	489	-462	-330	-109	578
	E1	23	-6	8	25	-12	-17	15	26
	E2	-11	3	9	15	-16	7	-9	20
	GR+T1	251	-471	247	588	-490	-331	-121	603
	SEIS	34	9	17	39	29	24	23	44
	GR+T1+SEIS	286	480	264	618	518	355	144	644
G02 -	GR	0	-137	1	137	-28	-1	-46	53
	T1	252	-339	246	489	-462	-391	-193	636
	E1	24	-6	8	26	-12	-19	13	26
	E2	-11	3	10	15	-16	4	-8	19
	GR+T1	251	-476	247	593	-490	-393	-239	672
	SEIS	35	9	18	40	29	24	21	43
	GR+T1+SEIS	286	485	265	623	518	416	260	714
G02 +	GR	0	86	1	86	-28	-1	-46	53
	T1	155	-29	181	240	-462	-391	-193	636
	E1	24	1	8	25	-12	-19	13	26
	E2	-11	0	10	15	-16	4	-8	19
	GR+T1	154	58	182	246	-490	-393	-239	672
	SEIS	35	1	18	39	29	24	21	43
	GR+T1+SEIS	189	58	200	282	518	416	260	714
G03 N	GR	0	81	1	81	-28	-2	-25	37
	T1	155	-29	181	240	-462	-437	-201	667
	E1	25	1	8	26	-12	-21	13	28
	E2	-11	0	11	15	-16	2	-8	18
	GR+T1	154	52	182	244	-490	-438	-225	695
	SEIS	35	1	19	40	29	23	21	42
	GR+T1+SEIS	190	53	201	281	518	461	246	736

G L O B A L F O R C E S & M O M E N T S

Point name	Load combination	FORCES (lb) X	Y	Z	Result	MOMENTS (ft-lb) X	Y	Z	Result
G03 F	GR	0	56	1	56	-27	-2	29	40
	T1	155	-29	181	240	-326	-572	-338	741
	E1	28	1	8	29	-6	-28	-6	29
	E2	-11	0	14	17	-7	-7	0	10
	GR+T1	154	27	182	240	-353	-575	-309	742
	SEIS	38	1	22	44	13	35	6	38
	GR+T1+SEIS	193	28	204	282	366	609	315	778
G04 -	GR	0	41	1	41	-26	-2	30	40
	T1	155	-29	181	240	-199	-572	-447	753
	E1	29	1	8	31	-1	-28	-26	38
	E2	-11	0	15	19	3	-7	8	11
	GR+T1	154	12	182	239	-225	-575	-418	745
	SEIS	40	1	24	47	4	35	34	49
	GR+T1+SEIS	195	12	206	284	229	609	452	792
G04 +	GR	0	-18	1	18	-26	-2	30	40
	T1	155	-29	181	240	-199	-572	-447	753
	E1	37	1	8	37	-1	-28	-26	38
	E2	-11	0	22	25	3	-7	8	11
	GR+T1	154	-47	182	243	-225	-575	-418	745
	SEIS	47	1	31	56	4	35	34	49
	GR+T1+SEIS	202	48	213	297	229	609	452	792
G05 -	GR	0	-18	1	18	-26	-2	30	39
	T1	155	-29	181	240	-108	-572	-525	784
	E1	37	1	8	37	3	-28	-44	52
	E2	-11	0	22	25	13	-7	13	20
	GR+T1	154	-47	182	243	-134	-575	-495	770
	SEIS	47	1	31	56	17	35	57	69
	GR+T1+SEIS	202	48	213	297	151	609	552	836
G05 +	GR	0	-42	1	42	-26	-2	30	39
	T1	155	-29	181	240	-108	-572	-525	784
	E1	39	1	8	40	3	-28	-44	52
	E2	-11	0	25	28	13	-7	13	20
	GR+T1	154	-71	182	249	-134	-575	-495	770
	SEIS	50	1	33	60	17	35	57	69
	GR+T1+SEIS	205	72	216	306	151	609	552	836
G06 N	GR	0	-42	1	42	-26	-2	30	39
	T1	155	-29	181	240	-108	-572	-525	784
	E1	39	1	8	40	3	-28	-44	52
	E2	-11	0	25	28	13	-7	13	20
	GR+T1	154	-71	182	249	-133	-575	-495	770
	SEIS	50	1	33	60	17	35	57	69
	GR+T1+SEIS	205	72	216	306	150	609	552	836

G L O B A L F O R C E S & M O M E N T S

Point name	Load combination	FORCES (lb) X	Y	Z	Result	MOMENTS (ft-lb) X	Y	Z	Result
G06 F	GR	0	-59	1	59	1	-2	30	30
	T1	155	-29	181	240	-3	-495	-602	780
	E1	41	1	8	42	7	-7	-64	65
	E2	-11	0	27	29	27	-13	19	35
	GR+T1	154	-88	182	255	-2	-498	-572	758
	SEIS	52	1	36	63	34	20	82	91
	GR+T1+SEIS	207	89	218	313	35	517	655	835
G07 -	GR	0	-62	1	62	10	-2	30	32
	T1	155	-29	181	240	1	-473	-602	765
	E1	42	1	8	43	7	-1	-64	64
	E2	-11	0	28	30	27	-14	19	35
	GR+T1	154	-91	182	256	11	-475	-572	744
	SEIS	53	1	36	64	34	15	82	90
	GR+T1+SEIS	207	92	218	314	45	490	655	819
G07 +	GR	0	-86	1	86	10	-2	30	32
	T1	155	-29	181	240	1	-473	-602	765
	E1	45	1	8	45	7	-1	-64	64
	E2	-11	0	31	32	27	-14	19	35
	GR+T1	154	-115	182	265	11	-475	-572	744
	SEIS	56	1	39	68	34	15	82	90
	GR+T1+SEIS	210	116	221	326	45	490	655	819
G08	GR	0	-105	1	105	27	-2	30	40
	T1	155	-29	181	240	7	-445	-602	749
	E1	47	1	8	48	7	7	-64	64
	E2	-11	0	33	35	27	-16	19	36
	GR+T1	154	-133	182	274	34	-447	-572	727
	SEIS	58	1	41	71	34	23	82	92
	GR+T1+SEIS	212	134	223	336	67	470	655	809

*** Segment G end ***

ASME B31.3c (1992) CODE COMPLIANCE

Point name	Load combination	(Moments in ft-lb) In-Pl. Moment	Out-Pl. Moment	Torsion Moment	S.I.F In	S.I.F Out	Eq. no.	(Stress in psi) Load type	Code Stress	Code Allow.
*** Segment A begin ***										
A02	Max P						(3a)	HOOP	0	16700
	GR + Max P	29	49		1.00	1.00	(18)	SUST	24	16700
	Cold to T1	149	23662	489	1.00	1.00	(17)	DISP	9497	25050
	Sus. + E1	46	76		1.00	1.00	(18)	OCC	37	22211
	Sus. + E2	54	52		1.00	1.00	(18)	OCC	35	22211
	SEIS	31	27		1.00	1.00	(18)	OCC	17	22211
	SUS+SEIS	60	76		1.00	1.00	(18)	OCC	41	22211
A03 N-	Max P						(3a)	HOOP	0	16700
	GR + Max P	35	28		1.00	1.00	(18)	SUST	19	16700
	Cold to T1	37	12959	489	1.00	1.00	(17)	DISP	5204	25050
	Sus. + E1	45	40		1.00	1.00	(18)	OCC	26	22211
	Sus. + E2	46	29		1.00	1.00	(18)	OCC	23	22211
	SEIS	14	12		1.00	1.00	(18)	OCC	8	22211
	SUS+SEIS	50	40		1.00	1.00	(18)	OCC	27	22211
A03 N+	Max P						(3a)	HOOP	0	16700
	GR + Max P	28	35		3.41	2.84	(18)	SUST	58	16700
	Cold to T1	12959	37	489	3.41	2.84	(17)	DISP	17753	25050
	Sus. + E1	40	45		3.41	2.84	(18)	OCC	79	22211
	Sus. + E2	29	46		3.41	2.84	(18)	OCC	71	22211
	SEIS	12	14		3.41	2.84	(18)	OCC	25	22211
	SUS+SEIS	40	50		3.41	2.84	(18)	OCC	83	22211
A03 M	Max P						(3a)	HOOP	0	16700
	GR + Max P	42	18		3.41	2.84	(18)	SUST	64	16700
	Cold to T1	268	454	317	3.41	2.84	(17)	DISP	647	25050
	Sus. + E1	45	21		3.41	2.84	(18)	OCC	70	22211
	Sus. + E2	42	20		3.41	2.84	(18)	OCC	67	22211
	SEIS	3	4		3.41	2.84	(18)	OCC	6	22211
	SUS+SEIS	45	22		3.41	2.84	(18)	OCC	70	22211
A03 F-	Max P						(3a)	HOOP	0	16700
	GR + Max P	14	10		3.41	2.84	(18)	SUST	23	16700
	Cold to T1	5932	678	152	3.41	2.84	(17)	DISP	8163	25050
	Sus. + E1	24	24		3.41	2.84	(18)	OCC	45	22211
	Sus. + E2	16	15		3.41	2.84	(18)	OCC	30	22211
	SEIS	10	14		3.41	2.84	(18)	OCC	22	22211
	SUS+SEIS	24	24		3.41	2.84	(18)	OCC	46	22211

ASME B31.3c (1992) CODE COMPLIANCE

Point name	Load combination	(Moments in ft-lb) In-Pl. Moment	Out-Pl. Moment	Torsion Moment	S.I.F In	S.I.F Out	Eq. no.	(Stress in psi) Load type	Code Stress	Code Allow.
A03 F+	Max P						(3a)	HOOP	0	16700
	GR + Max P	14	10		1.00	1.00	(18)	SUST	7	16700
	Cold to T1	5932	678	152	1.00	1.00	(17)	DISP	2397	25050
	Sus. + E1	24	24		1.00	1.00	(18)	OCC	14	22211
	Sus. + E2	16	15		1.00	1.00	(18)	OCC	9	22211
	SEIS	10	14		1.00	1.00	(18)	OCC	7	22211
	SUS+SEIS	24	24		1.00	1.00	(18)	OCC	15	22211
A04 -	Max P						(3a)	HOOP	0	16700
	GR + Max P	36	41		1.73	1.97	(18)	SUST	43	16700
	Cold to T1	4157	5263	152	1.73	1.97	(17)	DISP	5056	25050
	Sus. + E1	43	63		1.73	1.97	(18)	OCC	62	22211
	Sus. + E2	45	53		1.73	1.97	(18)	OCC	54	22211
	SEIS	12	24		1.73	1.97	(18)	OCC	22	22211
	SUS+SEIS	47	66		1.73	1.97	(18)	OCC	65	22211
A04 +	Max P						(3a)	HOOP	0	16700
	GR + Max P	27	61		1.73	1.97	(18)	SUST	54	16700
	Cold to T1	6342	1290	104	1.73	1.97	(17)	DISP	4509	25050
	Sus. + E1	39	79		1.73	1.97	(18)	OCC	72	22211
	Sus. + E2	43	73		1.73	1.97	(18)	OCC	69	22211
	SEIS	20	22		1.73	1.97	(18)	OCC	23	22211
	SUS+SEIS	47	82		1.73	1.97	(18)	OCC	77	22211
A05	Max P						(3a)	HOOP	0	16700
	GR + Max P	47	17		1.00	1.00	(18)	SUST	21	16700
	Cold to T1	5830	3772	1276	1.00	1.00	(17)	DISP	2833	25050
	Sus. + E1	53	32		1.00	1.00	(18)	OCC	28	22211
	Sus. + E2	47	32		1.00	1.00	(18)	OCC	27	22211
	SEIS	6	21		1.00	1.00	(18)	OCC	9	22211
	SUS+SEIS	53	38		1.00	1.00	(18)	OCC	30	22211
A06	Max P						(3a)	HOOP	0	16700
	GR + Max P	23	9		1.00	1.00	(18)	SUST	38	16700
	Cold to T1	5230	177	161	1.00	1.00	(17)	DISP	7396	25050
	Sus. + E1	27	15		1.00	1.00	(18)	OCC	49	22211
	Sus. + E2	24	14		1.00	1.00	(18)	OCC	46	22211
	SEIS	4	9		1.00	1.00	(18)	OCC	14	22211
	SUS+SEIS	27	18		1.00	1.00	(18)	OCC	52	22211
A07 N-	Max P						(3a)	HOOP	0	16700
	GR + Max P	23	9		1.00	1.00	(18)	SUST	37	16700
	Cold to T1	5234	177	161	1.00	1.00	(17)	DISP	7400	25050
	Sus. + E1	27	15		1.00	1.00	(18)	OCC	49	22211
	Sus. + E2	24	14		1.00	1.00	(18)	OCC	46	22211
	SEIS	4	9		1.00	1.00	(18)	OCC	14	22211
	SUS+SEIS	27	17		1.00	1.00	(18)	OCC	52	22211

ASME B31.3c (1992) CODE COMPLIANCE

Point name	Load combination	(Moments in ft-lb) In-Pl. Moment	Out-Pl. Moment	Torsion Moment	S.I.F In	S.I.F Out	(Stress in psi) Eq. no.	Load type	Code Stress	Code Allow.
A07 N+	Max P						(3a)	HOOP	0	16700
	GR + Max P	23	9		2.27	1.89	(18)	SUST	83	16700
	Cold to T1	5234	176	162	2.27	1.89	(17)	DISP	16756	25050
	Sus. + E1	27	15		2.27	1.89	(18)	OCC	106	22211
	Sus. + E2	24	14		2.27	1.89	(18)	OCC	99	22211
	SEIS	4	9		2.27	1.89	(18)	OCC	28	22211
	SUS+SEIS	27	17		2.27	1.89	(18)	OCC	111	22211
A07 F-	Max P						(3a)	HOOP	0	16700
	GR + Max P	4	16		2.27	1.89	(18)	SUST	48	16700
	Cold to T1	8288	209	129	2.27	1.89	(17)	DISP	26530	25050**
	with Sus. load margin						(17)		26530	41702
	Sus. + E1	9	21		2.27	1.89	(18)	OCC	71	22211
	Sus. + E2	5	23		2.27	1.89	(18)	OCC	68	22211
	SEIS	5	9		2.27	1.89	(18)	OCC	31	22211
	SUS+SEIS	9	25		2.27	1.89	(18)	OCC	79	22211
A07 F+	Max P						(3a)	HOOP	0	16700
	GR + Max P	16	4		1.00	1.00	(18)	SUST	25	16700
	Cold to T1	209	8288	129	1.00	1.00	(17)	DISP	11712	25050
	Sus. + E1	21	9		1.00	1.00	(18)	OCC	36	22211
	Sus. + E2	23	5		1.00	1.00	(18)	OCC	36	22211
	SEIS	9	5		1.00	1.00	(18)	OCC	15	22211
	SUS+SEIS	25	9		1.00	1.00	(18)	OCC	40	22211
A08	Max P						(3a)	HOOP	0	16700
	GR + Max P	18	2		1.00	1.00	(18)	SUST	27	16700
	Cold to T1	221	12009	129	1.00	1.00	(17)	DISP	16967	25050
	Sus. + E1	26	10		1.00	1.00	(18)	OCC	44	22211
	Sus. + E2	28	3		1.00	1.00	(18)	OCC	43	22211
	SEIS	13	8		1.00	1.00	(18)	OCC	23	22211
	SUS+SEIS	31	10		1.00	1.00	(18)	OCC	50	22211

*** Segment A end ***

*** Segment B begin ***

A04	Max P						(3a)	HOOP	0	16700
	GR + Max P	19	47		1.73	1.97	(18)	SUST	107	16700
	Cold to T1	3973	48	2184	1.73	1.97	(17)	DISP	7483	25050
	Sus. + E1	59	52		1.73	1.97	(18)	OCC	183	22211
	Sus. + E2	20	65		1.73	1.97	(18)	OCC	146	22211
	SEIS	40	19		1.73	1.97	(18)	OCC	85	22211
	SUS+SEIS	59	66		1.73	1.97	(18)	OCC	192	22211

ASME B31.3c (1992) CODE COMPLIANCE

Point name	Load combination	(Moments in ft-lb) In-Pl. Moment	Out-Pl. Moment	Torsion Moment	S.I.F In	S.I.F Out	(Stress in psi) Eq. no.	Load type	Code Stress	Code Allow.
B01 N-	Max P						(3a)	HOOP	0	16700
	GR + Max P	4	12		1.00	1.00	(18)	SUST	19	16700
	Cold to T1	4	2721	2184	1.00	1.00	(17)	DISP	4929	25050
	Sus. + E1	9	37		1.00	1.00	(18)	OCC	58	22211
	Sus. + E2	9	15		1.00	1.00	(18)	OCC	28	22211
	SEIS	7	25		1.00	1.00	(18)	OCC	39	22211
	SUS+SEIS	11	38		1.00	1.00	(18)	OCC	59	22211
B01 N+	Max P						(3a)	HOOP	0	16700
	GR + Max P	4	12		2.27	1.89	(18)	SUST	38	16700
	Cold to T1	4	2745	2155	2.27	1.89	(17)	DISP	7927	25050
	Sus. + E1	9	38		2.27	1.89	(18)	OCC	111	22211
	Sus. + E2	9	15		2.27	1.89	(18)	OCC	56	22211
	SEIS	7	25		2.27	1.89	(18)	OCC	76	22211
	SUS+SEIS	11	38		2.27	1.89	(18)	OCC	114	22211
B01 F-	Max P						(3a)	HOOP	0	16700
	GR + Max P	38	9		2.27	1.89	(18)	SUST	130	16700
	Cold to T1	4	2428	23	2.27	1.89	(17)	DISP	6475	25050
	Sus. + E1	41	29		2.27	1.89	(18)	OCC	189	22211
	Sus. + E2	39	17		2.27	1.89	(18)	OCC	156	22211
	SEIS	4	22		2.27	1.89	(18)	OCC	64	22211
	SUS+SEIS	42	31		2.27	1.89	(18)	OCC	195	22211
B01 F+	Max P						(3a)	HOOP	0	16700
	GR + Max P	38	9		1.00	1.00	(18)	SUST	58	16700
	Cold to T1	4	2428	41	1.00	1.00	(17)	DISP	3430	25050
	Sus. + E1	41	29		1.00	1.00	(18)	OCC	89	22211
	Sus. + E2	39	17		1.00	1.00	(18)	OCC	71	22211
	SEIS	4	22		1.00	1.00	(18)	OCC	34	22211
	SUS+SEIS	42	31		1.00	1.00	(18)	OCC	92	22211
B02	Max P						(3a)	HOOP	0	16700
	GR + Max P	38	9		1.00	1.00	(18)	SUST	58	16700
	Cold to T1	4	2422	109	1.00	1.00	(17)	DISP	3424	25050
	Sus. + E1	41	29		1.00	1.00	(18)	OCC	89	22211
	Sus. + E2	39	17		1.00	1.00	(18)	OCC	72	22211
	SEIS	4	22		1.00	1.00	(18)	OCC	34	22211
	SUS+SEIS	42	31		1.00	1.00	(18)	OCC	92	22211
B03	Max P						(3a)	HOOP	0	16700
	GR + Max P	49	1		1.00	1.00	(18)	SUST	73	16700
	Cold to T1	48	1028	92	1.00	1.00	(17)	DISP	1459	25050
	Sus. + E1	51	11		1.00	1.00	(18)	OCC	89	22211
	Sus. + E2	51	12		1.00	1.00	(18)	OCC	91	22211
	SEIS	4	15		1.00	1.00	(18)	OCC	24	22211
	SUS+SEIS	52	16		1.00	1.00	(18)	OCC	97	22211

ASME B31.3c (1992) CODE COMPLIANCE

Point name	Load combination	(Moments in ft-lb) In-Pl. Moment	Out-Pl. Moment	Torsion Moment	S.I.F In	S.I.F Out	(Stress in psi) Eq. no.	Load type	Code Stress	Code Allow.
B04 N-	Max P						(3a)	HOOP	0	16700
	GR + Max P	46	10		1.00	1.00	(18)	SUST	71	16700
	Cold to T1	110	879	92	1.00	1.00	(17)	DISP	1258	25050
	Sus. + E1	48	11		1.00	1.00	(18)	OCC	74	22211
	Sus. + E2	50	25		1.00	1.00	(18)	OCC	94	22211
	SEIS	4	15		1.00	1.00	(18)	OCC	23	22211
	SUS+SEIS	50	25		1.00	1.00	(18)	OCC	94	22211
B04 N+	Max P						(3a)	HOOP	0	16700
	GR + Max P	9	46		2.27	1.89	(18)	SUST	135	16700
	Cold to T1	881	94	92	2.27	1.89	(17)	DISP	2832	25050
	Sus. + E1	11	48		2.27	1.89	(18)	OCC	141	22211
	Sus. + E2	24	50		2.27	1.89	(18)	OCC	187	22211
	SEIS	15	4		2.27	1.89	(18)	OCC	52	22211
	SUS+SEIS	24	50		2.27	1.89	(18)	OCC	187	22211
B04 F-	Max P						(3a)	HOOP	0	16700
	GR + Max P	15	22		2.27	1.89	(18)	SUST	80	16700
	Cold to T1	2232	72	114	2.27	1.89	(17)	DISP	7146	25050
	Sus. + E1	23	22		2.27	1.89	(18)	OCC	109	22211
	Sus. + E2	21	23		2.27	1.89	(18)	OCC	103	22211
	SEIS	11	1		2.27	1.89	(18)	OCC	37	22211
	SUS+SEIS	25	23		2.27	1.89	(18)	OCC	117	22211
B04 F+	Max P						(3a)	HOOP	0	16700
	GR + Max P	22	15		1.00	1.00	(18)	SUST	40	16700
	Cold to T1	98	2231	114	1.00	1.00	(17)	DISP	3158	25050
	Sus. + E1	22	23		1.00	1.00	(18)	OCC	52	22211
	Sus. + E2	23	22		1.00	1.00	(18)	OCC	50	22211
	SEIS	1	11		1.00	1.00	(18)	OCC	16	22211
	SUS+SEIS	23	26		1.00	1.00	(18)	OCC	56	22211
B05	Max P						(3a)	HOOP	0	16700
	GR + Max P	131	7		1.00	1.00	(18)	SUST	198	16700
	Cold to T1	44	1926	97	1.00	1.00	(17)	DISP	2725	25050
	Sus. + E1	133	16		1.00	1.00	(18)	OCC	211	22211
	Sus. + E2	132	21		1.00	1.00	(18)	OCC	219	22211
	SEIS	2	16		1.00	1.00	(18)	OCC	25	22211
	SUS+SEIS	133	23		1.00	1.00	(18)	OCC	223	22211
B06 -	Max P						(3a)	HOOP	0	16700
	GR + Max P	4	114		1.52	1.69	(18)	SUST	291	16700
	Cold to T1	1575	432	97	1.52	1.69	(17)	DISP	3535	25050
	Sus. + E1	13	130		1.52	1.69	(18)	OCC	337	22211
	Sus. + E2	30	115		1.52	1.69	(18)	OCC	351	22211
	SEIS	28	16		1.52	1.69	(18)	OCC	76	22211
	SUS+SEIS	32	130		1.52	1.69	(18)	OCC	366	22211

ASME B31.3c (1992) CODE COMPLIANCE

Point name	Load combination	(Moments in ft-lb) In-Pl. Moment	Out-Pl. Moment	Torsion Moment	S.I.F In	S.I.F Out	(Stress in psi) Eq. no.	Load type	Code Stress	Code Allow.
B06 +	Max P						(3a)	HOOP	0	16700
	GR + Max P	20	91		1.52	1.69	(18)	SUST	237	16700
	Cold to T1	363	235	152	1.52	1.69	(17)	DISP	983	25050
	Sus. + E1	30	108		1.52	1.69	(18)	OCC	285	22211
	Sus. + E2	31	93		1.52	1.69	(18)	OCC	265	22211
	SEIS	16	16		1.52	1.69	(18)	OCC	55	22211
	SUS+SEIS	35	108		1.52	1.69	(18)	OCC	292	22211
B07	Max P						(3a)	HOOP	0	16700
	GR + Max P	89	18		1.00	1.00	(18)	SUST	136	16700
	Cold to T1	234	328	152	1.00	1.00	(17)	DISP	608	25050
	Sus. + E1	104	29		1.00	1.00	(18)	OCC	164	22211
	Sus. + E2	90	21		1.00	1.00	(18)	OCC	142	22211
	SEIS	15	11		1.00	1.00	(18)	OCC	28	22211
	SUS+SEIS	104	29		1.00	1.00	(18)	OCC	165	22211
B08	Max P						(3a)	HOOP	0	16700
	GR + Max P	81	19		1.00	1.00	(18)	SUST	125	16700
	Cold to T1	235	310	159	1.00	1.00	(17)	DISP	594	25050
	Sus. + E1	95	31		1.00	1.00	(18)	OCC	153	22211
	Sus. + E2	82	20		1.00	1.00	(18)	OCC	128	22211
	SEIS	14	11		1.00	1.00	(18)	OCC	28	22211
	SUS+SEIS	95	31		1.00	1.00	(18)	OCC	153	22211
B09 N-	Max P						(3a)	HOOP	0	16700
	GR + Max P	81	19		1.00	1.00	(18)	SUST	125	16700
	Cold to T1	235	310	159	1.00	1.00	(17)	DISP	594	25050
	Sus. + E1	95	31		1.00	1.00	(18)	OCC	152	22211
	Sus. + E2	82	20		1.00	1.00	(18)	OCC	127	22211
	SEIS	14	11		1.00	1.00	(18)	OCC	28	22211
	SUS+SEIS	95	31		1.00	1.00	(18)	OCC	152	22211
B09 N+	Max P						(3a)	HOOP	0	16700
	GR + Max P	81	19		2.27	1.89	(18)	SUST	281	16700
	Cold to T1	235	310	158	2.27	1.89	(17)	DISP	1141	25050
	Sus. + E1	95	31		2.27	1.89	(18)	OCC	339	22211
	Sus. + E2	82	20		2.27	1.89	(18)	OCC	286	22211
	SEIS	14	11		2.27	1.89	(18)	OCC	59	22211
	SUS+SEIS	95	31		2.27	1.89	(18)	OCC	339	22211
B09 F-	Max P						(3a)	HOOP	0	16700
	GR + Max P	14	73		2.27	1.89	(18)	SUST	212	16700
	Cold to T1	134	99	250	2.27	1.89	(17)	DISP	615	25050
	Sus. + E1	17	81		2.27	1.89	(18)	OCC	239	22211
	Sus. + E2	15	78		2.27	1.89	(18)	OCC	229	22211
	SEIS	3	11		2.27	1.89	(18)	OCC	32	22211
	SUS+SEIS	17	83		2.27	1.89	(18)	OCC	244	22211

ASME B31.3c (1992) CODE COMPLIANCE

Point name	Load combination	(Moments in ft-lb) In-Pl. Moment	Out-Pl. Moment	Torsion Moment	S.I.F In	S.I.F Out	Eq. no.	(Stress in psi) Load type	Code Stress	Code Allow.
B09 F+	Max P						(3a)	HOOP	0	16700
	GR + Max P	73	14		1.00	1.00	(18)	SUST	112	16700
	Cold to T1	99	134	250	1.00	1.00	(17)	DISP	424	25050
	Sus. + E1	82	17		1.00	1.00	(18)	OCC	126	22211
	Sus. + E2	78	15		1.00	1.00	(18)	OCC	120	22211
	SEIS	11	3		1.00	1.00	(18)	OCC	17	22211
	SUS+SEIS	83	17		1.00	1.00	(18)	OCC	128	22211
B10 N-	Max P						(3a)	HOOP	0	16700
	GR + Max P	73	14		1.00	1.00	(18)	SUST	112	16700
	Cold to T1	73	87	250	1.00	1.00	(17)	DISP	388	25050
	Sus. + E1	81	15		1.00	1.00	(18)	OCC	125	22211
	Sus. + E2	77	14		1.00	1.00	(18)	OCC	118	22211
	SEIS	9	2		1.00	1.00	(18)	OCC	14	22211
	SUS+SEIS	82	15		1.00	1.00	(18)	OCC	126	22211
B10 N+	Max P						(3a)	HOOP	0	16700
	GR + Max P	61	42		2.27	1.89	(18)	SUST	241	16700
	Cold to T1	114	10	250	2.27	1.89	(17)	DISP	508	25050
	Sus. + E1	66	49		2.27	1.89	(18)	OCC	267	22211
	Sus. + E2	64	45		2.27	1.89	(18)	OCC	253	22211
	SEIS	5	8		2.27	1.89	(18)	OCC	28	22211
	SUS+SEIS	67	50		2.27	1.89	(18)	OCC	269	22211
B10 F-	Max P						(3a)	HOOP	0	16700
	GR + Max P	33	17		2.27	1.89	(18)	SUST	124	16700
	Cold to T1	1	284	24	2.27	1.89	(17)	DISP	759	25050
	Sus. + E1	40	22		2.27	1.89	(18)	OCC	151	22211
	Sus. + E2	34	24		2.27	1.89	(18)	OCC	145	22211
	SEIS	7	9		2.27	1.89	(18)	OCC	35	22211
	SUS+SEIS	40	26		2.27	1.89	(18)	OCC	158	22211
B10 F+	Max P						(3a)	HOOP	0	16700
	GR + Max P	33	17		1.00	1.00	(18)	SUST	56	16700
	Cold to T1	1	284	24	1.00	1.00	(17)	DISP	403	25050
	Sus. + E1	40	22		1.00	1.00	(18)	OCC	69	22211
	Sus. + E2	34	24		1.00	1.00	(18)	OCC	68	22211
	SEIS	7	9		1.00	1.00	(18)	OCC	17	22211
	SUS+SEIS	40	26		1.00	1.00	(18)	OCC	74	22211
B11 N-	Max P						(3a)	HOOP	0	16700
	GR + Max P	33	17		1.00	1.00	(18)	SUST	56	16700
	Cold to T1	1	284	24	1.00	1.00	(17)	DISP	403	25050
	Sus. + E1	40	22		1.00	1.00	(18)	OCC	69	22211
	Sus. + E2	34	24		1.00	1.00	(18)	OCC	68	22211
	SEIS	7	9		1.00	1.00	(18)	OCC	17	22211
	SUS+SEIS	40	26		1.00	1.00	(18)	OCC	74	22211

ASME B31.3c (1992) CODE COMPLIANCE

Point name	Load combination	(Moments in ft-lb) In-Pl. Moment	Out-Pl. Moment	Torsion Moment	S.I.F In	S.I.F Out	Eq. no.	(Stress in psi) Load type	Code Stress	Code Allow.
B11 N+	Max P						(3a)	HOOP	0	16700
	GR + Max P	17	33		2.27	1.89	(18)	SUST	111	16700
	Cold to T1	284	1	24	2.27	1.89	(17)	DISP	910	25050
	Sus. + E1	22	40		2.27	1.89	(18)	OCC	137	22211
	Sus. + E2	24	34		2.27	1.89	(18)	OCC	137	22211
	SEIS	9	7		2.27	1.89	(18)	OCC	37	22211
	SUS+SEIS	26	40		2.27	1.89	(18)	OCC	148	22211
B11 F-	Max P						(3a)	HOOP	0	16700
	GR + Max P	16	68		2.27	1.89	(18)	SUST	201	16700
	Cold to T1	343	23	14	2.27	1.89	(17)	DISP	1100	25050
	Sus. + E1	19	71		2.27	1.89	(18)	OCC	216	22211
	Sus. + E2	24	68		2.27	1.89	(18)	OCC	230	22211
	SEIS	9	3		2.27	1.89	(18)	OCC	33	22211
	SUS+SEIS	25	71		2.27	1.89	(18)	OCC	234	22211
B11 F+	Max P						(3a)	HOOP	0	16700
	GR + Max P	68	16		1.00	1.00	(18)	SUST	105	16700
	Cold to T1	23	343	14	1.00	1.00	(17)	DISP	486	25050
	Sus. + E1	71	19		1.00	1.00	(18)	OCC	113	22211
	Sus. + E2	68	24		1.00	1.00	(18)	OCC	118	22211
	SEIS	3	9		1.00	1.00	(18)	OCC	15	22211
	SUS+SEIS	71	25		1.00	1.00	(18)	OCC	120	22211
B12	Max P						(3a)	HOOP	0	16700
	GR + Max P	107	15		1.00	1.00	(18)	SUST	163	16700
	Cold to T1	25	381	14	1.00	1.00	(17)	DISP	539	25050
	Sus. + E1	110	23		1.00	1.00	(18)	OCC	176	22211
	Sus. + E2	107	24		1.00	1.00	(18)	OCC	176	22211
	SEIS	3	12		1.00	1.00	(18)	OCC	19	22211
	SUS+SEIS	110	27		1.00	1.00	(18)	OCC	182	22211
B13	Max P						(3a)	HOOP	0	16700
	GR + Max P	82	15		1.00	1.00	(18)	SUST	126	16700
	Cold to T1	18	404	14	1.00	1.00	(17)	DISP	572	25050
	Sus. + E1	83	28		1.00	1.00	(18)	OCC	146	22211
	Sus. + E2	82	24		1.00	1.00	(18)	OCC	139	22211
	SEIS	1	16		1.00	1.00	(18)	OCC	24	22211
	SUS+SEIS	83	31		1.00	1.00	(18)	OCC	150	22211
B14	Max P						(3a)	HOOP	0	16700
	GR + Max P	43	14		1.00	1.00	(18)	SUST	68	16700
	Cold to T1	5	451	14	1.00	1.00	(17)	DISP	637	25050
	Sus. + E1	45	38		1.00	1.00	(18)	OCC	104	22211
	Sus. + E2	43	23		1.00	1.00	(18)	OCC	82	22211
	SEIS	3	26		1.00	1.00	(18)	OCC	39	22211
	SUS+SEIS	45	40		1.00	1.00	(18)	OCC	107	22211

1C71-4PRINT

ASME B31.3c (1992) CODE COMPLIANCE

Point name	Load combination	(Moments in ft-lb) In-Pl. Moment	Out-Pl. Moment	Torsion Moment	S.I.F In	S.I.F Out	(Stress in psi) Eq. no.	Load type	Code Stress	Code Allow.
B15 N-	Max P						(3a)	HOOP	0	16700
	GR + Max P	42	14		1.00	1.00	(18)	SUST	67	16700
	Cold to T1	5	451	14	1.00	1.00	(17)	DISP	638	25050
	Sus. + E1	45	38		1.00	1.00	(18)	OCC	104	22211
	Sus. + E2	42	23		1.00	1.00	(18)	OCC	81	22211
	SEIS	3	26		1.00	1.00	(18)	OCC	40	22211
	SUS+SEIS	45	40		1.00	1.00	(18)	OCC	107	22211
B15 N+	Max P						(3a)	HOOP	0	16700
	GR + Max P	14	42		2.27	1.89	(18)	SUST	129	16700
	Cold to T1	451	5	14	2.27	1.89	(17)	DISP	1445	25050
	Sus. + E1	38	45		2.27	1.89	(18)	OCC	213	22211
	Sus. + E2	23	42		2.27	1.89	(18)	OCC	162	22211
	SEIS	26	3		2.27	1.89	(18)	OCC	90	22211
	SUS+SEIS	40	45		2.27	1.89	(18)	OCC	219	22211
B15 F-	Max P						(3a)	HOOP	0	16700
	GR + Max P	13	46		2.27	1.89	(18)	SUST	139	16700
	Cold to T1	507	1	13	2.27	1.89	(17)	DISP	1621	25050
	Sus. + E1	52	52		2.27	1.89	(18)	OCC	275	22211
	Sus. + E2	25	47		2.27	1.89	(18)	OCC	180	22211
	SEIS	41	5		2.27	1.89	(18)	OCC	141	22211
	SUS+SEIS	54	52		2.27	1.89	(18)	OCC	281	22211
B15 F+	Max P						(3a)	HOOP	0	16700
	GR + Max P	47	13		1.00	1.00	(18)	SUST	73	16700
	Cold to T1	1	507	13	1.00	1.00	(17)	DISP	716	25050
	Sus. + E1	52	52		1.00	1.00	(18)	OCC	133	22211
	Sus. + E2	47	25		1.00	1.00	(18)	OCC	91	22211
	SEIS	5	41		1.00	1.00	(18)	OCC	62	22211
	SUS+SEIS	52	54		1.00	1.00	(18)	OCC	135	22211
B16	Max P						(3a)	HOOP	0	16700
	GR + Max P	47	13		1.00	1.00	(18)	SUST	73	16700
	Cold to T1	1	507	13	1.00	1.00	(17)	DISP	716	25050
	Sus. + E1	52	52		1.00	1.00	(18)	OCC	133	22211
	Sus. + E2	47	25		1.00	1.00	(18)	OCC	91	22211
	SEIS	5	41		1.00	1.00	(18)	OCC	62	22211
	SUS+SEIS	52	54		1.00	1.00	(18)	OCC	135	22211

*** Segment B end ***

*** Segment C begin ***

ASME B31.3c (1992) CODE COMPLIANCE

Point name	Load combination	(Moments in ft-lb) In-Pl. Moment	Out-Pl. Moment	Torsion Moment	S.I.F In	S.I.F Out	(Stress in psi) Eq. no.	Load type	Code Stress	Code Allow.
B06	Max P						(3a)	HOOP	0	16700
	GR + Max P	17	86		1.52	1.69	(18)	SUST	215	16700
	Cold to T1	1933	155	313	1.52	1.69	(17)	DISP	4016	25050
	Sus. + E1	36	97		1.52	1.69	(18)	OCC	266	22211
	Sus. + E2	55	100		1.52	1.69	(18)	OCC	306	22211
	SEIS	43	18		1.52	1.69	(18)	OCC	104	22211
	SUS+SEIS	59	104		1.52	1.69	(18)	OCC	319	22211
C01 N-	Max P						(3a)	HOOP	0	16700
	GR + Max P	3	4		1.00	1.00	(18)	SUST	8	16700
	Cold to T1	86	59	313	1.00	1.00	(17)	DISP	467	25050
	Sus. + E1	5	28		1.00	1.00	(18)	OCC	44	22211
	Sus. + E2	18	38		1.00	1.00	(18)	OCC	63	22211
	SEIS	15	42		1.00	1.00	(18)	OCC	67	22211
	SUS+SEIS	18	45		1.00	1.00	(18)	OCC	74	22211
C01 N+	Max P						(3a)	HOOP	0	16700
	GR + Max P	4	3		2.97	2.47	(18)	SUST	21	16700
	Cold to T1	60	86	313	2.97	2.47	(17)	DISP	590	25050
	Sus. + E1	28	5		2.97	2.47	(18)	OCC	128	22211
	Sus. + E2	38	18		2.97	2.47	(18)	OCC	183	22211
	SEIS	42	15		2.97	2.47	(18)	OCC	194	22211
	SUS+SEIS	45	18		2.97	2.47	(18)	OCC	215	22211
C01 F-	Max P						(3a)	HOOP	0	16700
	GR + Max P	3	80		2.97	2.47	(18)	SUST	300	16700
	Cold to T1	628	452	50	2.97	2.47	(17)	DISP	3070	25050
	Sus. + E1	30	90		2.97	2.47	(18)	OCC	424	22211
	Sus. + E2	29	83		2.97	2.47	(18)	OCC	417	22211
	SEIS	37	10		2.97	2.47	(18)	OCC	171	22211
	SUS+SEIS	40	90		2.97	2.47	(18)	OCC	470	22211
C01 F+	Max P						(3a)	HOOP	0	16700
	GR + Max P	80	3		1.00	1.00	(18)	SUST	121	16700
	Cold to T1	451	628	50	1.00	1.00	(17)	DISP	1095	25050
	Sus. + E1	90	30		1.00	1.00	(18)	OCC	164	22211
	Sus. + E2	83	29		1.00	1.00	(18)	OCC	161	22211
	SEIS	10	37		1.00	1.00	(18)	OCC	58	22211
	SUS+SEIS	90	40		1.00	1.00	(18)	OCC	179	22211
C02	Max P						(3a)	HOOP	0	16700
	GR + Max P	89	4		1.00	1.00	(18)	SUST	134	16700
	Cold to T1	497	670	50	1.00	1.00	(17)	DISP	1180	25050
	Sus. + E1	100	31		1.00	1.00	(18)	OCC	178	22211
	Sus. + E2	92	27		1.00	1.00	(18)	OCC	169	22211
	SEIS	12	35		1.00	1.00	(18)	OCC	56	22211
	SUS+SEIS	101	39		1.00	1.00	(18)	OCC	190	22211

ASME B31.3c (1992) CODE COMPLIANCE

Point name	Load combination	(Moments in ft-lb) In-Pl. Moment	Out-Pl. Moment	Torsion Moment	S.I.F In	S.I.F Out	(Stress in psi) Eq. no.	Load type	Code Stress	Code Allow.
C03	Max P						(3a)	HOOP	0	16700
	GR + Max P	97	5		1.00	1.00	(18)	SUST	146	16700
	Cold to T1	545	714	50	1.00	1.00	(17)	DISP	1271	25050
	Sus. + E1	110	32		1.00	1.00	(18)	OCC	192	22211
	Sus. + E2	99	24		1.00	1.00	(18)	OCC	175	22211
	SEIS	14	33		1.00	1.00	(18)	OCC	54	22211
	SUS+SEIS	110	38		1.00	1.00	(18)	OCC	200	22211
C04	Max P						(3a)	HOOP	0	16700
	GR + Max P	97	5		1.00	1.00	(18)	SUST	147	16700
	Cold to T1	550	718	50	1.00	1.00	(17)	DISP	1280	25050
	Sus. + E1	111	32		1.00	1.00	(18)	OCC	193	22211
	Sus. + E2	100	24		1.00	1.00	(18)	OCC	175	22211
	SEIS	14	33		1.00	1.00	(18)	OCC	54	22211
	SUS+SEIS	111	38		1.00	1.00	(18)	OCC	201	22211
C05	- Max P						(3a)	HOOP	0	16700
	GR + Max P	7	109		1.52	1.69	(18)	SUST	279	16700
	Cold to T1	827	672	50	1.52	1.69	(17)	DISP	2392	25050
	Sus. + E1	36	128		1.52	1.69	(18)	OCC	360	22211
	Sus. + E2	16	112		1.52	1.69	(18)	OCC	300	22211
	SEIS	30	19		1.52	1.69	(18)	OCC	83	22211
	SUS+SEIS	37	128		1.52	1.69	(18)	OCC	362	22211
C05	+ Max P						(3a)	HOOP	0	16700
	GR + Max P	13	97		1.52	1.69	(18)	SUST	248	16700
	Cold to T1	170	33	698	1.52	1.69	(17)	DISP	1055	25050
	Sus. + E1	31	115		1.52	1.69	(18)	OCC	310	22211
	Sus. + E2	49	104		1.52	1.69	(18)	OCC	334	22211
	SEIS	40	20		1.52	1.69	(18)	OCC	105	22211
	SUS+SEIS	53	116		1.52	1.69	(18)	OCC	354	22211
C06	Max P						(3a)	HOOP	0	16700
	GR + Max P	86	7		1.00	1.00	(18)	SUST	130	16700
	Cold to T1	212	202	698	1.00	1.00	(17)	DISP	1070	25050
	Sus. + E1	107	20		1.00	1.00	(18)	OCC	167	22211
	Sus. + E2	91	30		1.00	1.00	(18)	OCC	165	22211
	SEIS	21	26		1.00	1.00	(18)	OCC	51	22211
	SUS+SEIS	108	33		1.00	1.00	(18)	OCC	181	22211
C07	Max P						(3a)	HOOP	0	16700
	GR + Max P	75	5		1.00	1.00	(18)	SUST	113	16700
	Cold to T1	311	353	698	1.00	1.00	(17)	DISP	1189	25050
	Sus. + E1	97	16		1.00	1.00	(18)	OCC	150	22211
	Sus. + E2	78	21		1.00	1.00	(18)	OCC	139	22211
	SEIS	22	20		1.00	1.00	(18)	OCC	45	22211
	SUS+SEIS	97	25		1.00	1.00	(18)	OCC	158	22211

ASME B31.3c (1992) CODE COMPLIANCE

Point name	Load combination	(Moments in ft-lb) In-Pl. Moment	Out-Pl. Moment	Torsion Moment	S.I.F In	S.I.F Out	(Stress in psi) Eq. no.	Load type	Code Stress	Code Allow.
C08	N- Max P						(3a)	HOOP	0	16700
	GR + Max P	36	0		1.00	1.00	(18)	SUST	54	16700
	Cold to T1	530	685	698	1.00	1.00	(17)	DISP	1571	25050
	Sus. + E1	60	8		1.00	1.00	(18)	OCC	92	22211
	Sus. + E2	37	1		1.00	1.00	(18)	OCC	56	22211
	SEIS	24	7		1.00	1.00	(18)	OCC	38	22211
	SUS+SEIS	60	8		1.00	1.00	(18)	OCC	92	22211
C08	N+ Max P						(3a)	HOOP	0	16700
	GR + Max P	36	0		2.27	1.89	(18)	SUST	122	16700
	Cold to T1	530	685	698	2.27	1.89	(17)	DISP	2679	25050
	Sus. + E1	60	8		2.27	1.89	(18)	OCC	207	22211
	Sus. + E2	37	1		2.27	1.89	(18)	OCC	126	22211
	SEIS	24	7		2.27	1.89	(18)	OCC	85	22211
	SUS+SEIS	60	8		2.27	1.89	(18)	OCC	207	22211
C08	F- Max P						(3a)	HOOP	0	16700
	GR + Max P	38	2		2.27	1.89	(18)	SUST	130	16700
	Cold to T1	197	71	1312	2.27	1.89	(17)	DISP	1967	25050
	Sus. + E1	39	7		2.27	1.89	(18)	OCC	144	22211
	Sus. + E2	40	5		2.27	1.89	(18)	OCC	141	22211
	SEIS	3	5		2.27	1.89	(18)	OCC	18	22211
	SUS+SEIS	41	8		2.27	1.89	(18)	OCC	148	22211
C08	F+ Max P						(3a)	HOOP	0	16700
	GR + Max P	2	38		1.00	1.00	(18)	SUST	57	16700
	Cold to T1	71	197	1312	1.00	1.00	(17)	DISP	1876	25050
	Sus. + E1	7	39		1.00	1.00	(18)	OCC	65	22211
	Sus. + E2	5	40		1.00	1.00	(18)	OCC	63	22211
	SEIS	5	3		1.00	1.00	(18)	OCC	9	22211
	SUS+SEIS	8	41		1.00	1.00	(18)	OCC	66	22211
C09	N- Max P						(3a)	HOOP	0	16700
	GR + Max P	3	37		1.00	1.00	(18)	SUST	56	16700
	Cold to T1	4	320	1312	1.00	1.00	(17)	DISP	1907	25050
	Sus. + E1	7	41		1.00	1.00	(18)	OCC	65	22211
	Sus. + E2	4	40		1.00	1.00	(18)	OCC	61	22211
	SEIS	4	5		1.00	1.00	(18)	OCC	10	22211
	SUS+SEIS	7	42		1.00	1.00	(18)	OCC	66	22211
C09	N+ Max P						(3a)	HOOP	0	16700
	GR + Max P	3	37		2.27	1.89	(18)	SUST	106	16700
	Cold to T1	4	320	1312	2.27	1.89	(17)	DISP	2040	25050
	Sus. + E1	7	41		2.27	1.89	(18)	OCC	124	22211
	Sus. + E2	4	40		2.27	1.89	(18)	OCC	115	22211
	SEIS	4	5		2.27	1.89	(18)	OCC	21	22211
	SUS+SEIS	7	42		2.27	1.89	(18)	OCC	126	22211

ASME B31.3c (1992) CODE COMPLIANCE

Point name	Load combination	(Moments in ft-lb) In-Pl. Moment	Out-Pl. Moment	Torsion Moment	S.I.F In	S.I.F Out	(Stress in psi) Eq. no.	Load type	Code Stress	Code Allow.
C09 F-	Max P						(3a)	HOOP	0	16700
	GR + Max P	96	0		2.27	1.89	(18)	SUST	329	16700
	Cold to T1	210	172	1460	2.27	1.89	(17)	DISP	2217	25050
	Sus. + E1	105	33		2.27	1.89	(18)	OCC	427	22211
	Sus. + E2	126	24		2.27	1.89	(18)	OCC	451	22211
	SEIS	31	40		2.27	1.89	(18)	OCC	155	22211
	SUS+SEIS	127	41		2.27	1.89	(18)	OCC	485	22211
C09 F+	Max P						(3a)	HOOP	0	16700
	GR + Max P	96	0		1.00	1.00	(18)	SUST	145	16700
	Cold to T1	210	172	1460	1.00	1.00	(17)	DISP	2097	25050
	Sus. + E1	105	33		1.00	1.00	(18)	OCC	196	22211
	Sus. + E2	126	24		1.00	1.00	(18)	OCC	202	22211
	SEIS	31	40		1.00	1.00	(18)	OCC	76	22211
	SUS+SEIS	127	41		1.00	1.00	(18)	OCC	222	22211
C10	Max P						(3a)	HOOP	0	16700
	GR + Max P	102	1		1.00	1.00	(18)	SUST	153	16700
	Cold to T1	192	120	1460	1.00	1.00	(17)	DISP	2087	25050
	Sus. + E1	110	35		1.00	1.00	(18)	OCC	206	22211
	Sus. + E2	131	24		1.00	1.00	(18)	OCC	210	22211
	SEIS	30	41		1.00	1.00	(18)	OCC	78	22211
	SUS+SEIS	132	42		1.00	1.00	(18)	OCC	231	22211
C11 -	Max P						(3a)	HOOP	0	16700
	GR + Max P	173	7		1.52	1.69	(18)	SUST	396	16700
	Cold to T1	51	550	1460	1.52	1.69	(17)	DISP	2448	25050
	Sus. + E1	184	61		1.52	1.69	(18)	OCC	536	22211
	Sus. + E2	199	27		1.52	1.69	(18)	OCC	475	22211
	SEIS	29	57		1.52	1.69	(18)	OCC	161	22211
	SUS+SEIS	202	65		1.52	1.69	(18)	OCC	557	22211
C11 +	Max P						(3a)	HOOP	0	16700
	GR + Max P	151	8		1.52	1.69	(18)	SUST	347	16700
	Cold to T1	165	441	1306	1.52	1.69	(17)	DISP	2153	25050
	Sus. + E1	161	55		1.52	1.69	(18)	OCC	469	22211
	Sus. + E2	217	27		1.52	1.69	(18)	OCC	505	22211
	SEIS	66	51		1.52	1.69	(18)	OCC	200	22211
	SUS+SEIS	218	58		1.52	1.69	(18)	OCC	547	22211
C12	Max P						(3a)	HOOP	0	16700
	GR + Max P	243	14		1.00	1.00	(18)	SUST	368	16700
	Cold to T1	562	1137	1306	1.00	1.00	(17)	DISP	2572	25050
	Sus. + E1	255	89		1.00	1.00	(18)	OCC	481	22211
	Sus. + E2	297	30		1.00	1.00	(18)	OCC	452	22211
	SEIS	55	76		1.00	1.00	(18)	OCC	141	22211
	SUS+SEIS	298	91		1.00	1.00	(18)	OCC	509	22211

*** Segment C end ***

ASME B31.3c (1992) CODE COMPLIANCE

Point name	Load combination	(Moments in ft-lb) In-Pl. Moment	Out-Pl. Moment	Torsion Moment	S.I.F In	S.I.F Out	(Stress in psi) Eq. no.	Load type	Code Stress	Code Allow.
*** Segment D begin ***										
C11	Max P						(3a)	HOOP	0	16700
	GR + Max P	22	2		1.52	1.69	(18)	SUST	48	16700
	Cold to T1	114	154	110	1.52	1.69	(17)	DISP	450	25050
	Sus. + E1	23	27		1.52	1.69	(18)	OCC	109	22211
	Sus. + E2	61	2		1.52	1.69	(18)	OCC	134	22211
	SEIS	39	25		1.52	1.69	(18)	OCC	106	22211
	SUS+SEIS	61	27		1.52	1.69	(18)	OCC	154	22211
D01 N-	Max P						(3a)	HOOP	0	16700
	GR + Max P	20	1		1.00	1.00	(18)	SUST	30	16700
	Cold to T1	384	33	110	1.00	1.00	(17)	DISP	566	25050
	Sus. + E1	21	3		1.00	1.00	(18)	OCC	34	22211
	Sus. + E2	29	1		1.00	1.00	(18)	OCC	43	22211
	SEIS	9	2		1.00	1.00	(18)	OCC	14	22211
	SUS+SEIS	29	3		1.00	1.00	(18)	OCC	44	22211
D01 N+	Max P						(3a)	HOOP	0	16700
	GR + Max P	20	1		2.27	1.89	(18)	SUST	69	16700
	Cold to T1	384	33	110	2.27	1.89	(17)	DISP	1243	25050
	Sus. + E1	21	3		2.27	1.89	(18)	OCC	76	22211
	Sus. + E2	29	1		2.27	1.89	(18)	OCC	98	22211
	SEIS	9	2		2.27	1.89	(18)	OCC	31	22211
	SUS+SEIS	29	3		2.27	1.89	(18)	OCC	99	22211
D01 F-	Max P						(3a)	HOOP	0	16700
	GR + Max P	17	0		2.27	1.89	(18)	SUST	59	16700
	Cold to T1	243	76	1	2.27	1.89	(17)	DISP	805	25050
	Sus. + E1	17	9		2.27	1.89	(18)	OCC	85	22211
	Sus. + E2	21	1		2.27	1.89	(18)	OCC	73	22211
	SEIS	4	9		2.27	1.89	(18)	OCC	29	22211
	SUS+SEIS	21	9		2.27	1.89	(18)	OCC	89	22211
D01 F+	Max P						(3a)	HOOP	0	16700
	GR + Max P	17	0		1.00	1.00	(18)	SUST	26	16700
	Cold to T1	243	76	1	1.00	1.00	(17)	DISP	360	25050
	Sus. + E1	17	9		1.00	1.00	(18)	OCC	40	22211
	Sus. + E2	21	1		1.00	1.00	(18)	OCC	32	22211
	SEIS	4	9		1.00	1.00	(18)	OCC	15	22211
	SUS+SEIS	21	9		1.00	1.00	(18)	OCC	41	22211

ASME B31.3c (1992) CODE COMPLIANCE

Point name	Load combination	(Moments in ft-lb) In-Pl. Moment	Out-Pl. Moment	Torsion Moment	S.I.F In	S.I.F Out	Eq. no.	(Stress in psi) Load type	Code Stress	Code Allow.
D02	Max P						(3a)	HOOP	0	16700
	GR + Max P	57	0		1.00	1.00	(18)	SUST	86	16700
	Cold to T1	66	48	1	1.00	1.00	(17)	DISP	115	25050
	Sus. + E1	58	10		1.00	1.00	(18)	OCC	101	22211
	Sus. + E2	65	1		1.00	1.00	(18)	OCC	98	22211
	SEIS	8	10		1.00	1.00	(18)	OCC	19	22211
	SUS+SEIS	65	10		1.00	1.00	(18)	OCC	106	22211
D03	Max P						(3a)	HOOP	0	16700
	GR + Max P	50	1		1.00	1.00	(18)	SUST	76	16700
	Cold to T1	237	48	1	1.00	1.00	(17)	DISP	341	25050
	Sus. + E1	51	6		1.00	1.00	(18)	OCC	83	22211
	Sus. + E2	54	1		1.00	1.00	(18)	OCC	82	22211
	SEIS	4	5		1.00	1.00	(18)	OCC	10	22211
	SUS+SEIS	54	6		1.00	1.00	(18)	OCC	86	22211
D04	Max P						(3a)	HOOP	0	16700
	GR + Max P	44	1		1.00	1.00	(18)	SUST	66	16700
	Cold to T1	309	70	1	1.00	1.00	(17)	DISP	447	25050
	Sus. + E1	44	1		1.00	1.00	(18)	OCC	66	22211
	Sus. + E2	47	1		1.00	1.00	(18)	OCC	71	22211
	SEIS	3	0		1.00	1.00	(18)	OCC	5	22211
	SUS+SEIS	47	1		1.00	1.00	(18)	OCC	71	22211
D05 N-	Max P						(3a)	HOOP	0	16700
	GR + Max P	30	1		1.00	1.00	(18)	SUST	45	16700
	Cold to T1	345	82	1	1.00	1.00	(17)	DISP	500	25050
	Sus. + E1	30	5		1.00	1.00	(18)	OCC	50	22211
	Sus. + E2	32	2		1.00	1.00	(18)	OCC	49	22211
	SEIS	3	4		1.00	1.00	(18)	OCC	7	22211
	SUS+SEIS	32	5		1.00	1.00	(18)	OCC	51	22211
D05 N+	Max P						(3a)	HOOP	0	16700
	GR + Max P	30	1		2.27	1.89	(18)	SUST	101	16700
	Cold to T1	345	82	1	2.27	1.89	(17)	DISP	1124	25050
	Sus. + E1	30	5		2.27	1.89	(18)	OCC	112	22211
	Sus. + E2	32	2		2.27	1.89	(18)	OCC	110	22211
	SEIS	3	4		2.27	1.89	(18)	OCC	14	22211
	SUS+SEIS	32	5		2.27	1.89	(18)	OCC	115	22211
D05 F-	Max P						(3a)	HOOP	0	16700
	GR + Max P	22	1		2.27	1.89	(18)	SUST	74	16700
	Cold to T1	528	33	115	2.27	1.89	(17)	DISP	1700	25050
	Sus. + E1	22	15		2.27	1.89	(18)	OCC	113	22211
	Sus. + E2	27	1		2.27	1.89	(18)	OCC	91	22211
	SEIS	5	14		2.27	1.89	(18)	OCC	42	22211
	SUS+SEIS	27	15		2.27	1.89	(18)	OCC	116	22211

ASME B31.3c (1992) CODE COMPLIANCE

Point name	Load combination	(Moments in ft-lb) In-Pl. Moment	Out-Pl. Moment	Torsion Moment	S.I.F In	S.I.F Out	Eq. no.	(Stress in psi) Load type	Code Stress	Code Allow.
D05 F+	Max P						(3a)	HOOP	0	16700
	GR + Max P	22	1		1.00	1.00	(18)	SUST	33	16700
	Cold to T1	528	33	116	1.00	1.00	(17)	DISP	765	25050
	Sus. + E1	22	14		1.00	1.00	(18)	OCC	53	22211
	Sus. + E2	27	1		1.00	1.00	(18)	OCC	40	22211
	SEIS	5	14		1.00	1.00	(18)	OCC	22	22211
	SUS+SEIS	27	14		1.00	1.00	(18)	OCC	55	22211
D06	Max P						(3a)	HOOP	0	16700
	GR + Max P	22	1		1.00	1.00	(18)	SUST	33	16700
	Cold to T1	528	33	116	1.00	1.00	(17)	DISP	765	25050
	Sus. + E1	22	15		1.00	1.00	(18)	OCC	53	22211
	Sus. + E2	27	1		1.00	1.00	(18)	OCC	40	22211
	SEIS	5	14		1.00	1.00	(18)	OCC	22	22211
	SUS+SEIS	27	15		1.00	1.00	(18)	OCC	55	22211
*** Segment D end ***										
*** Segment E begin ***										
C05	Max P						(3a)	HOOP	0	16700
	GR + Max P	20	12		1.52	1.69	(18)	SUST	54	16700
	Cold to T1	997	749	705	1.52	1.69	(17)	DISP	2841	25050
	Sus. + E1	31	21		1.52	1.69	(18)	OCC	86	22211
	Sus. + E2	49	29		1.52	1.69	(18)	OCC	129	22211
	SEIS	30	19		1.52	1.69	(18)	OCC	81	22211
	SUS+SEIS	51	31		1.52	1.69	(18)	OCC	135	22211
E01 N-	Max P						(3a)	HOOP	0	16700
	GR + Max P	8	20		1.00	1.00	(18)	SUST	32	16700
	Cold to T1	589	1170	705	1.00	1.00	(17)	DISP	2101	25050
	Sus. + E1	14	21		1.00	1.00	(18)	OCC	40	22211
	Sus. + E2	22	41		1.00	1.00	(18)	OCC	71	22211
	SEIS	15	22		1.00	1.00	(18)	OCC	40	22211
	SUS+SEIS	23	41		1.00	1.00	(18)	OCC	72	22211
E01 N+	Max P						(3a)	HOOP	0	16700
	GR + Max P	20	8		2.97	2.47	(18)	SUST	93	16700
	Cold to T1	1170	589	705	2.97	2.47	(17)	DISP	5413	25050
	Sus. + E1	21	14		2.97	2.47	(18)	OCC	114	22211
	Sus. + E2	41	22		2.97	2.47	(18)	OCC	204	22211
	SEIS	22	15		2.97	2.47	(18)	OCC	112	22211
	SUS+SEIS	41	23		2.97	2.47	(18)	OCC	205	22211

ASME B31.3c (1992) CODE COMPLIANCE

Point name	Load combination	(Moments in ft-lb) In-Pl. Moment	Out-Pl. Moment	Torsion Moment	S.I.F In	S.I.F Out	(Stress in psi) Eq. no.	Load type	Code Stress	Code Allow.
E01 F-	Max P						(3a)	HOOP	0	16700
	GR + Max P	18	24		2.97	2.47	(18)	SUST	120	16700
	Cold to T1	1190	816	122	2.97	2.47	(17)	DISP	5748	25050
	Sus. + E1	20	25		2.97	2.47	(18)	OCC	132	22211
	Sus. + E2	35	39		2.97	2.47	(18)	OCC	215	22211
	SEIS	17	15		2.97	2.47	(18)	OCC	96	22211
	SUS+SEIS	36	39		2.97	2.47	(18)	OCC	216	22211
E01 F+	Max P						(3a)	HOOP	0	16700
	GR + Max P	24	18		1.00	1.00	(18)	SUST	45	16700
	Cold to T1	816	1190	122	1.00	1.00	(17)	DISP	2045	25050
	Sus. + E1	25	20		1.00	1.00	(18)	OCC	49	22211
	Sus. + E2	39	35		1.00	1.00	(18)	OCC	79	22211
	SEIS	15	17		1.00	1.00	(18)	OCC	35	22211
	SUS+SEIS	39	36		1.00	1.00	(18)	OCC	80	22211
E02 N-	Max P						(3a)	HOOP	0	16700
	GR + Max P	34	10		1.00	1.00	(18)	SUST	53	16700
	Cold to T1	483	942	122	1.00	1.00	(17)	DISP	1506	25050
	Sus. + E1	39	14		1.00	1.00	(18)	OCC	62	22211
	Sus. + E2	41	17		1.00	1.00	(18)	OCC	68	22211
	SEIS	9	7		1.00	1.00	(18)	OCC	18	22211
	SUS+SEIS	43	17		1.00	1.00	(18)	OCC	71	22211
E02 N+	Max P						(3a)	HOOP	0	16700
	GR + Max P	10	34		2.97	2.47	(18)	SUST	133	16700
	Cold to T1	942	483	122	2.97	2.47	(17)	DISP	4301	25050
	Sus. + E1	14	39		2.97	2.47	(18)	OCC	158	22211
	Sus. + E2	17	41		2.97	2.47	(18)	OCC	174	22211
	SEIS	7	9		2.97	2.47	(18)	OCC	47	22211
	SUS+SEIS	17	43		2.97	2.47	(18)	OCC	181	22211
E02 F-	Max P						(3a)	HOOP	0	16700
	GR + Max P	7	20		2.97	2.47	(18)	SUST	81	16700
	Cold to T1	777	330	214	2.97	2.47	(17)	DISP	3469	25050
	Sus. + E1	8	28		2.97	2.47	(18)	OCC	111	22211
	Sus. + E2	12	22		2.97	2.47	(18)	OCC	104	22211
	SEIS	5	8		2.97	2.47	(18)	OCC	37	22211
	SUS+SEIS	12	28		2.97	2.47	(18)	OCC	118	22211
E02 F+	Max P						(3a)	HOOP	0	16700
	GR + Max P	20	7		1.00	1.00	(18)	SUST	32	16700
	Cold to T1	330	777	214	1.00	1.00	(17)	DISP	1230	25050
	Sus. + E1	28	8		1.00	1.00	(18)	OCC	44	22211
	Sus. + E2	22	12		1.00	1.00	(18)	OCC	40	22211
	SEIS	8	5		1.00	1.00	(18)	OCC	14	22211
	SUS+SEIS	28	12		1.00	1.00	(18)	OCC	46	22211

ASME B31.3c (1992) CODE COMPLIANCE

Point name	Load combination	(Moments in ft-lb) In-Pl. Moment	Out-Pl. Moment	Torsion Moment	S.I.F In	S.I.F Out	(Stress in psi) Eq. no.	Load type	Code Stress	Code Allow.
E03	Max P						(3a)	HOOP	0	16700
	GR + Max P	18	6		1.00	1.00	(18)	SUST	28	16700
	Cold to T1	285	681	214	1.00	1.00	(17)	DISP	1086	25050
	Sus. + E1	26	7		1.00	1.00	(18)	OCC	41	22211
	Sus. + E2	19	11		1.00	1.00	(18)	OCC	35	22211
	SEIS	9	5		1.00	1.00	(18)	OCC	15	22211
	SUS+SEIS	26	11		1.00	1.00	(18)	OCC	43	22211
E04	Max P						(3a)	HOOP	0	16700
	GR + Max P	14	98		1.52	1.69	(18)	SUST	241	16700
	Cold to T1	857	438	214	1.52	1.69	(17)	DISP	2050	25050
	Sus. + E1	47	121		1.52	1.69	(18)	OCC	334	22211
	Sus. + E2	30	112		1.52	1.69	(18)	OCC	290	22211
	SEIS	36	28		1.52	1.69	(18)	OCC	105	22211
	SUS+SEIS	51	125		1.52	1.69	(18)	OCC	346	22211

*** Segment E end ***

*** Segment F begin ***

Point name	Load combination	(Moments in ft-lb) In-Pl. Moment	Out-Pl. Moment	Torsion Moment	S.I.F In	S.I.F Out	(Stress in psi) Eq. no.	Load type	Code Stress	Code Allow.
E04	Max P						(3a)	HOOP	0	16700
	GR + Max P	13	108		1.52	1.69	(18)	SUST	277	16700
	Cold to T1	895	348	499	1.52	1.69	(17)	DISP	2206	25050
	Sus. + E1	39	117		1.52	1.69	(18)	OCC	339	22211
	Sus. + E2	29	133		1.52	1.69	(18)	OCC	349	22211
	SEIS	30	26		1.52	1.69	(18)	OCC	95	22211
	SUS+SEIS	43	134		1.52	1.69	(18)	OCC	372	22211
F01	Max P						(3a)	HOOP	0	16700
	GR + Max P	121	14		1.00	1.00	(18)	SUST	183	16700
	Cold to T1	58	872	499	1.00	1.00	(17)	DISP	1421	25050
	Sus. + E1	129	29		1.00	1.00	(18)	OCC	209	22211
	Sus. + E2	144	29		1.00	1.00	(18)	OCC	225	22211
	SEIS	25	21		1.00	1.00	(18)	OCC	49	22211
	SUS+SEIS	146	35		1.00	1.00	(18)	OCC	232	22211
F02	Max P						(3a)	HOOP	0	16700
	GR + Max P	119	14		1.00	1.00	(18)	SUST	181	16700
	Cold to T1	53	863	499	1.00	1.00	(17)	DISP	1410	25050
	Sus. + E1	127	25		1.00	1.00	(18)	OCC	202	22211
	Sus. + E2	142	29		1.00	1.00	(18)	OCC	222	22211
	SEIS	24	19		1.00	1.00	(18)	OCC	46	22211
	SUS+SEIS	143	33		1.00	1.00	(18)	OCC	227	22211

ASME B31.3c (1992) CODE COMPLIANCE

Point name	Load combination	(Moments in ft-lb) In-Pl. Moment	Out-Pl. Moment	Torsion Moment	S.I.F In	S.I.F Out	(Stress in psi) Eq. no.	Load type	Code Stress	Code Allow.
F03	Max P						(3a)	HOOP	0	16700
	GR + Max P	72	15		1.00	1.00	(18)	SUST	111	16700
	Cold to T1	599	820	499	1.00	1.00	(17)	DISP	1598	25050
	Sus. + E1	80	16		1.00	1.00	(18)	OCC	123	22211
	Sus. + E2	92	30		1.00	1.00	(18)	OCC	148	22211
	SEIS	21	15		1.00	1.00	(18)	OCC	39	22211
	SUS+SEIS	93	30		1.00	1.00	(18)	OCC	150	22211
F04 N-	Max P						(3a)	HOOP	0	16700
	GR + Max P	56	15		1.00	1.00	(18)	SUST	87	16700
	Cold to T1	755	807	499	1.00	1.00	(17)	DISP	1713	25050
	Sus. + E1	63	19		1.00	1.00	(18)	OCC	100	22211
	Sus. + E2	75	30		1.00	1.00	(18)	OCC	123	22211
	SEIS	21	15		1.00	1.00	(18)	OCC	39	22211
	SUS+SEIS	76	31		1.00	1.00	(18)	OCC	126	22211
F04 N+	Max P						(3a)	HOOP	0	16700
	GR + Max P	56	15		2.27	1.89	(18)	SUST	195	16700
	Cold to T1	755	807	499	2.27	1.89	(17)	DISP	3313	25050
	Sus. + E1	63	19		2.27	1.89	(18)	OCC	223	22211
	Sus. + E2	75	30		2.27	1.89	(18)	OCC	273	22211
	SEIS	21	15		2.27	1.89	(18)	OCC	83	22211
	SUS+SEIS	76	31		2.27	1.89	(18)	OCC	278	22211
F04 F-	Max P						(3a)	HOOP	0	16700
	GR + Max P	9	46		2.27	1.89	(18)	SUST	134	16700
	Cold to T1	589	462	771	2.27	1.89	(17)	DISP	2503	25050
	Sus. + E1	13	47		2.27	1.89	(18)	OCC	149	22211
	Sus. + E2	14	50		2.27	1.89	(18)	OCC	155	22211
	SEIS	7	4		2.27	1.89	(18)	OCC	26	22211
	SUS+SEIS	15	50		2.27	1.89	(18)	OCC	159	22211
F04 F+	Max P						(3a)	HOOP	0	16700
	GR + Max P	9	46		1.00	1.00	(18)	SUST	70	16700
	Cold to T1	589	462	771	1.00	1.00	(17)	DISP	1518	25050
	Sus. + E1	13	47		1.00	1.00	(18)	OCC	77	22211
	Sus. + E2	14	50		1.00	1.00	(18)	OCC	80	22211
	SEIS	7	4		1.00	1.00	(18)	OCC	12	22211
	SUS+SEIS	15	50		1.00	1.00	(18)	OCC	82	22211
F05 N-	Max P						(3a)	HOOP	0	16700
	GR + Max P	18	45		1.00	1.00	(18)	SUST	73	16700
	Cold to T1	307	410	771	1.00	1.00	(17)	DISP	1308	25050
	Sus. + E1	18	54		1.00	1.00	(18)	OCC	87	22211
	Sus. + E2	32	49		1.00	1.00	(18)	OCC	95	22211
	SEIS	14	10		1.00	1.00	(18)	OCC	26	22211
	SUS+SEIS	32	55		1.00	1.00	(18)	OCC	99	22211

ASME B31.3c (1992) CODE COMPLIANCE

Point name	Load combination	(Moments in ft-lb) In-Pl. Moment	Out-Pl. Moment	Torsion Moment	S.I.F In	S.I.F Out	(Stress in psi) Eq. no.	Load type	Code Stress	Code Allow.
F05 N+	Max P						(3a)	HOOP	0	16700
	GR + Max P	45	18		2.27	1.89	(18)	SUST	161	16700
	Cold to T1	410	307	771	2.27	1.89	(17)	DISP	1892	25050
	Sus. + E1	54	18		2.27	1.89	(18)	OCC	192	22211
	Sus. + E2	49	32		2.27	1.89	(18)	OCC	204	22211
	SEIS	10	14		2.27	1.89	(18)	OCC	53	22211
	SUS+SEIS	55	32		2.27	1.89	(18)	OCC	214	22211
F05 F-	Max P						(3a)	HOOP	0	16700
	GR + Max P	55	10		2.27	1.89	(18)	SUST	191	16700
	Cold to T1	90	142	937	2.27	1.89	(17)	DISP	1405	25050
	Sus. + E1	68	24		2.27	1.89	(18)	OCC	250	22211
	Sus. + E2	57	11		2.27	1.89	(18)	OCC	198	22211
	SEIS	13	15		2.27	1.89	(18)	OCC	60	22211
	SUS+SEIS	68	24		2.27	1.89	(18)	OCC	251	22211
F05 F+	Max P						(3a)	HOOP	0	16700
	GR + Max P	55	10		1.00	1.00	(18)	SUST	85	16700
	Cold to T1	90	142	937	1.00	1.00	(17)	DISP	1344	25050
	Sus. + E1	68	24		1.00	1.00	(18)	OCC	113	22211
	Sus. + E2	57	11		1.00	1.00	(18)	OCC	88	22211
	SEIS	13	15		1.00	1.00	(18)	OCC	29	22211
	SUS+SEIS	68	24		1.00	1.00	(18)	OCC	114	22211
F06	Max P						(3a)	HOOP	0	16700
	GR + Max P	116	6		1.00	1.00	(18)	SUST	175	16700
	Cold to T1	347	208	937	1.00	1.00	(17)	DISP	1441	25050
	Sus. + E1	128	22		1.00	1.00	(18)	OCC	206	22211
	Sus. + E2	117	17		1.00	1.00	(18)	OCC	191	22211
	SEIS	12	20		1.00	1.00	(18)	OCC	35	22211
	SUS+SEIS	128	25		1.00	1.00	(18)	OCC	210	22211
F07	Max P						(3a)	HOOP	0	16700
	GR + Max P	78	4		1.00	1.00	(18)	SUST	117	16700
	Cold to T1	428	424	937	1.00	1.00	(17)	DISP	1573	25050
	Sus. + E1	86	21		1.00	1.00	(18)	OCC	146	22211
	Sus. + E2	79	20		1.00	1.00	(18)	OCC	142	22211
	SEIS	9	24		1.00	1.00	(18)	OCC	39	22211
	SUS+SEIS	86	28		1.00	1.00	(18)	OCC	156	22211
F08	Max P						(3a)	HOOP	0	16700
	GR + Max P	25	1		1.00	1.00	(18)	SUST	37	16700
	Cold to T1	586	844	937	1.00	1.00	(17)	DISP	1963	25050
	Sus. + E1	27	20		1.00	1.00	(18)	OCC	67	22211
	Sus. + E2	30	32		1.00	1.00	(18)	OCC	85	22211
	SEIS	5	37		1.00	1.00	(18)	OCC	56	22211
	SUS+SEIS	30	38		1.00	1.00	(18)	OCC	94	22211

ASME B31.3c (1992) CODE COMPLIANCE

Point name	Load combination	(Moments in ft-lb) In-Pl. Moment	Out-Pl. Moment	Torsion Moment	S.I.F In	S.I.F Out	Eq. no.	(Stress in psi) Load type	Code Stress	Code Allow.
F09 N-	Max P						(3a)	HOOP	0	16700
	GR + Max P	22	1		1.00	1.00	(18)	SUST	33	16700
	Cold to T1	597	874	937	1.00	1.00	(17)	DISP	1997	25050
	Sus. + E1	23	21		1.00	1.00	(18)	OCC	62	22211
	Sus. + E2	27	34		1.00	1.00	(18)	OCC	82	22211
	SEIS	6	38		1.00	1.00	(18)	OCC	58	22211
	SUS+SEIS	27	39		1.00	1.00	(18)	OCC	90	22211
F09 N+	Max P						(3a)	HOOP	0	16700
	GR + Max P	1	22		2.97	2.47	(18)	SUST	81	16700
	Cold to T1	874	597	937	2.97	2.47	(17)	DISP	4421	25050
	Sus. + E1	21	23		2.97	2.47	(18)	OCC	169	22211
	Sus. + E2	34	27		2.97	2.47	(18)	OCC	228	22211
	SEIS	38	6		2.97	2.47	(18)	OCC	171	22211
	SUS+SEIS	39	27		2.97	2.47	(18)	OCC	252	22211
F09 F-	Max P						(3a)	HOOP	0	16700
	GR + Max P	3	15		2.97	2.47	(18)	SUST	56	16700
	Cold to T1	1080	1063	494	2.97	2.47	(17)	DISP	5899	25050
	Sus. + E1	24	15		2.97	2.47	(18)	OCC	150	22211
	Sus. + E2	44	23		2.97	2.47	(18)	OCC	239	22211
	SEIS	46	8		2.97	2.47	(18)	OCC	206	22211
	SUS+SEIS	49	23		2.97	2.47	(18)	OCC	262	22211
F09 F+	Max P						(3a)	HOOP	0	16700
	GR + Max P	15	3		1.00	1.00	(18)	SUST	22	16700
	Cold to T1	1063	1080	494	1.00	1.00	(17)	DISP	2251	25050
	Sus. + E1	15	24		1.00	1.00	(18)	OCC	54	22211
	Sus. + E2	23	44		1.00	1.00	(18)	OCC	85	22211
	SEIS	8	46		1.00	1.00	(18)	OCC	70	22211
	SUS+SEIS	23	49		1.00	1.00	(18)	OCC	92	22211
F10	Max P						(3a)	HOOP	0	16700
	GR + Max P	20	4		1.00	1.00	(18)	SUST	31	16700
	Cold to T1	1084	1128	494	1.00	1.00	(17)	DISP	2317	25050
	Sus. + E1	21	25		1.00	1.00	(18)	OCC	63	22211
	Sus. + E2	28	46		1.00	1.00	(18)	OCC	95	22211
	SEIS	8	47		1.00	1.00	(18)	OCC	72	22211
	SUS+SEIS	28	51		1.00	1.00	(18)	OCC	103	22211

*** Segment F end ***

*** Segment G begin ***

ASME B31.3c (1992) CODE COMPLIANCE

Point name	Load combination	(Moments in ft-lb) In-Pl. Moment	Out-Pl. Moment	Torsion Moment	S.I.F In	S.I.F Out	Eq. no.	(Stress in psi) Load type	Code Stress	Code Allow.
E04	Max P						(3a)	HOOP	0	16700
	GR + Max P	1	85		1.52	1.69	(18)	SUST	216	16700
	Cold to T1	37	134	61	1.52	1.69	(17)	DISP	340	25050
	Sus. + E1	8	91		1.52	1.69	(18)	OCC	239	22211
	Sus. + E2	1	104		1.52	1.69	(18)	OCC	264	22211
	SEIS	7	20		1.52	1.69	(18)	OCC	54	22211
	SUS+SEIS	8	105		1.52	1.69	(18)	OCC	269	22211
G01 N-	Max P						(3a)	HOOP	0	16700
	GR + Max P	33	1		1.00	1.00	(18)	SUST	50	16700
	Cold to T1	293	81	61	1.00	1.00	(17)	DISP	437	25050
	Sus. + E1	42	3		1.00	1.00	(18)	OCC	64	22211
	Sus. + E2	51	6		1.00	1.00	(18)	OCC	78	22211
	SEIS	20	6		1.00	1.00	(18)	OCC	31	22211
	SUS+SEIS	53	7		1.00	1.00	(18)	OCC	81	22211
G01 N+	Max P						(3a)	HOOP	0	16700
	GR + Max P	1	33		2.97	2.47	(18)	SUST	123	16700
	Cold to T1	81	293	61	2.97	2.47	(17)	DISP	1080	25050
	Sus. + E1	3	42		2.97	2.47	(18)	OCC	160	22211
	Sus. + E2	6	51		2.97	2.47	(18)	OCC	193	22211
	SEIS	6	20		2.97	2.47	(18)	OCC	79	22211
	SUS+SEIS	7	53		2.97	2.47	(18)	OCC	202	22211
G01 F-	Max P						(3a)	HOOP	0	16700
	GR + Max P	1	12		2.97	2.47	(18)	SUST	45	16700
	Cold to T1	330	109	462	2.97	2.47	(17)	DISP	1575	25050
	Sus. + E1	18	27		2.97	2.47	(18)	OCC	140	22211
	Sus. + E2	8	21		2.97	2.47	(18)	OCC	88	22211
	SEIS	19	17		2.97	2.47	(18)	OCC	104	22211
	SUS+SEIS	20	29		2.97	2.47	(18)	OCC	149	22211
G01 F+	Max P						(3a)	HOOP	0	16700
	GR + Max P	12	1		1.00	1.00	(18)	SUST	18	16700
	Cold to T1	109	330	462	1.00	1.00	(17)	DISP	816	25050
	Sus. + E1	27	18		1.00	1.00	(18)	OCC	52	22211
	Sus. + E2	21	8		1.00	1.00	(18)	OCC	34	22211
	SEIS	17	19		1.00	1.00	(18)	OCC	38	22211
	SUS+SEIS	29	20		1.00	1.00	(18)	OCC	56	22211
G02	Max P						(3a)	HOOP	0	16700
	GR + Max P	46	1		1.00	1.00	(18)	SUST	69	16700
	Cold to T1	193	391	462	1.00	1.00	(17)	DISP	898	25050
	Sus. + E1	59	21		1.00	1.00	(18)	OCC	104	22211
	Sus. + E2	54	5		1.00	1.00	(18)	OCC	82	22211
	SEIS	15	20		1.00	1.00	(18)	OCC	38	22211
	SUS+SEIS	61	21		1.00	1.00	(18)	OCC	106	22211

ASME B31.3c (1992) CODE COMPLIANCE

Point name	Load combination	(Moments in ft-lb) In-Pl. Moment	Out-Pl. Moment	Torsion Moment	S.I.F In	S.I.F Out	(Stress in psi) Eq. no.	Load type	Code Stress	Code Allow.
G03 N-	Max P						(3a)	HOOP	0	16700
	GR + Max P	25	2		1.00	1.00	(18)	SUST	37	16700
	Cold to T1	201	437	462	1.00	1.00	(17)	DISP	942	25050
	Sus. + E1	38	23		1.00	1.00	(18)	OCC	75	22211
	Sus. + E2	33	3		1.00	1.00	(18)	OCC	49	22211
	SEIS	15	21		1.00	1.00	(18)	OCC	40	22211
	SUS+SEIS	40	23		1.00	1.00	(18)	OCC	77	22211
G03 N+	Max P						(3a)	HOOP	0	16700
	GR + Max P	25	2		2.27	1.89	(18)	SUST	84	16700
	Cold to T1	201	437	462	2.27	1.89	(17)	DISP	1481	25050
	Sus. + E1	38	23		2.27	1.89	(18)	OCC	160	22211
	Sus. + E2	33	3		2.27	1.89	(18)	OCC	112	22211
	SEIS	15	21		2.27	1.89	(18)	OCC	80	22211
	SUS+SEIS	40	23		2.27	1.89	(18)	OCC	165	22211
G03 F-	Max P						(3a)	HOOP	0	16700
	GR + Max P	29	27		2.27	1.89	(18)	SUST	126	16700
	Cold to T1	338	326	572	2.27	1.89	(17)	DISP	1607	25050
	Sus. + E1	36	33		2.27	1.89	(18)	OCC	154	22211
	Sus. + E2	30	34		2.27	1.89	(18)	OCC	146	22211
	SEIS	6	9		2.27	1.89	(18)	OCC	34	22211
	SUS+SEIS	36	36		2.27	1.89	(18)	OCC	161	22211
G03 F+	Max P						(3a)	HOOP	0	16700
	GR + Max P	27	29		1.00	1.00	(18)	SUST	60	16700
	Cold to T1	326	338	572	1.00	1.00	(17)	DISP	1046	25050
	Sus. + E1	33	36		1.00	1.00	(18)	OCC	74	22211
	Sus. + E2	34	30		1.00	1.00	(18)	OCC	70	22211
	SEIS	9	6		1.00	1.00	(18)	OCC	17	22211
	SUS+SEIS	36	36		1.00	1.00	(18)	OCC	77	22211
G04	Max P						(3a)	HOOP	0	16700
	GR + Max P	26	30		1.00	1.00	(18)	SUST	60	16700
	Cold to T1	199	447	572	1.00	1.00	(17)	DISP	1064	25050
	Sus. + E1	27	56		1.00	1.00	(18)	OCC	99	22211
	Sus. + E2	29	37		1.00	1.00	(18)	OCC	72	22211
	SEIS	3	28		1.00	1.00	(18)	OCC	42	22211
	SUS+SEIS	30	57		1.00	1.00	(18)	OCC	101	22211
G05	Max P						(3a)	HOOP	0	16700
	GR + Max P	26	30		1.00	1.00	(18)	SUST	59	16700
	Cold to T1	108	525	572	1.00	1.00	(17)	DISP	1107	25050
	Sus. + E1	29	73		1.00	1.00	(18)	OCC	125	22211
	Sus. + E2	39	43		1.00	1.00	(18)	OCC	88	22211
	SEIS	14	46		1.00	1.00	(18)	OCC	72	22211
	SUS+SEIS	40	75		1.00	1.00	(18)	OCC	131	22211

ASME B31.3c (1992) CODE COMPLIANCE

Point name	Load combination	(Moments in ft-lb) In-Pl. Moment	Out-Pl. Moment	Torsion Moment	S.I.F In	S.I.F Out	(Stress in psi) Eq. no.	Load type	Code Stress	Code Allow.
G06 N-	Max P						(3a)	HOOP	0	16700
	GR + Max P	26	30		1.00	1.00	(18)	SUST	59	16700
	Cold to T1	108	525	572	1.00	1.00	(17)	DISP	1108	25050
	Sus. + E1	29	73		1.00	1.00	(18)	OCC	125	22211
	Sus. + E2	39	43		1.00	1.00	(18)	OCC	88	22211
	SEIS	14	46		1.00	1.00	(18)	OCC	72	22211
	SUS+SEIS	40	75		1.00	1.00	(18)	OCC	131	22211
G06 N+	Max P						(3a)	HOOP	0	16700
	GR + Max P	26	30		2.97	2.47	(18)	SUST	160	16700
	Cold to T1	108	524	574	2.97	2.47	(17)	DISP	2052	25050
	Sus. + E1	29	73		2.97	2.47	(18)	OCC	323	22211
	Sus. + E2	39	43		2.97	2.47	(18)	OCC	238	22211
	SEIS	14	46		2.97	2.47	(18)	OCC	181	22211
	SUS+SEIS	40	75		2.97	2.47	(18)	OCC	341	22211
G06 F-	Max P						(3a)	HOOP	0	16700
	GR + Max P	1	2		2.97	2.47	(18)	SUST	10	16700
	Cold to T1	3	494	603	2.97	2.47	(17)	DISP	1925	25050
	Sus. + E1	8	10		2.97	2.47	(18)	OCC	52	22211
	Sus. + E2	28	15		2.97	2.47	(18)	OCC	138	22211
	SEIS	27	14		2.97	2.47	(18)	OCC	134	22211
	SUS+SEIS	29	17		2.97	2.47	(18)	OCC	145	22211
G06 F+	Max P						(3a)	HOOP	0	16700
	GR + Max P	1	2		1.00	1.00	(18)	SUST	4	16700
	Cold to T1	3	495	602	1.00	1.00	(17)	DISP	1101	25050
	Sus. + E1	8	10		1.00	1.00	(18)	OCC	19	22211
	Sus. + E2	28	15		1.00	1.00	(18)	OCC	48	22211
	SEIS	27	14		1.00	1.00	(18)	OCC	47	22211
	SUS+SEIS	29	17		1.00	1.00	(18)	OCC	51	22211
G07	Max P						(3a)	HOOP	0	16700
	GR + Max P	10	2		1.00	1.00	(18)	SUST	15	16700
	Cold to T1	1	473	602	1.00	1.00	(17)	DISP	1081	25050
	Sus. + E1	17	4		1.00	1.00	(18)	OCC	26	22211
	Sus. + E2	37	17		1.00	1.00	(18)	OCC	61	22211
	SEIS	27	14		1.00	1.00	(18)	OCC	47	22211
	SUS+SEIS	37	17		1.00	1.00	(18)	OCC	62	22211

*** Segment G end ***

S Y S T E M S U M M A R Y

Maximum displacements (in)

Maximum X :	0.075	Point : B04 F	Load Comb.: GR+T1+SEIS
Maximum Y :	0.044	Point : D01 F	Load Comb.: T1
Maximum Z :	0.063	Point : D03	Load Comb.: GR+T1+SEIS
Max. total:	0.098	Point : B04 F	Load Comb.: GR+T1+SEIS

Maximum rotations (deg)

Maximum X :	0.039	Point : F05 N	Load Comb.: GR+T1+SEIS
Maximum Y :	0.158	Point : B04 N	Load Comb.: GR+T1+SEIS
Maximum Z :	0.107	Point : A03 M	Load Comb.: GR+T1+SEIS
Max. total:	0.159	Point : B04 N	Load Comb.: GR+T1+SEIS

Maximum restraint forces(lb)

Maximum X :	21645	Point : A00	Load Comb.: GR+T1+SEIS
Maximum Y :	1645	Point : A08	Load Comb.: GR+T1+SEIS
Maximum Z :	1034	Point : C12	Load Comb.: GR+T1+SEIS
Max. total:	21647	Point : A00	Load Comb.: GR+T1+SEIS

Maximum restraint moments(ft-lb)

Maximum X :	1032	Point : F10	Load Comb.: GR+T1+SEIS
Maximum Y :	1242	Point : C12	Load Comb.: GR+T1+SEIS
Maximum Z :	42785	Point : A00	Load Comb.: GR+T1+SEIS
Max. total:	42790	Point : A00	Load Comb.: GR+T1+SEIS

S Y S T E M S U M M A R Y

Maximum pipe forces (lb)

Maximum X :	21641	Point : A00	Load Comb.: GR+T1+SEIS
Maximum Y :	1621	Point : A08	Load Comb.: GR+T1+SEIS
Maximum Z :	1031	Point : C12	Load Comb.: GR+T1+SEIS
Max. total:	21672	Point : A03 M	Load Comb.: GR+T1+SEIS

Maximum pipe moments (ft-lb)

Maximum X :	1032	Point : F10	Load Comb.: GR+T1+SEIS
Maximum Y :	4420	Point : A04	Load Comb.: GR+T1+SEIS
Maximum Z :	42785	Point : A00	Load Comb.: GR+T1+SEIS
Max. total:	42790	Point : A00	Load Comb.: GR+T1+SEIS

S Y S T E M S U M M A R Y

Maximum sustained stress

Point	: C11
Stress psi	: 396
Allowable psi	: 16700
Ratio	: 0.02
Load combination	: GR + Max P

Maximum displacement stress

Point	: A07 F
Stress psi	: 26530
Allowable psi	: 41702
Ratio	: 0.64
Load combination	: Cold to T1

Maximum occasional stress

Point	: C11
Stress psi	: 557
Allowable psi	: 22211
Ratio	: 0.03
Load combination	: SUS+SEIS

Maximum sustained stress ratio

Point	: C11
Stress psi	: 396
Allowable psi	: 16700
Ratio	: 0.02
Load combination	: GR + Max P

Maximum displacement stress ratio

Point	: A03 N
Stress psi	: 17753
Allowable psi	: 25050
Ratio	: 0.71
Load combination	: Cold to T1

Maximum occasional stress ratio

Point	: C11
Stress psi	: 557
Allowable psi	: 22211
Ratio	: 0.03
Load combination	: SUS+SEIS

S Y S T E M S U M M A R Y

* * * The system satisfies ASME B31.3 code requirements * * *
* * * for the selected options * * *

```
**************************************************************
**                                                          **
**              AUTOPIPE SYSTEM DATA LISTING                **
**                                                          **
**************************************************************
```

SYSTEM NAME : W320H32B

PROJECT ID : PROCESS BUILDING PIPING STRESS ANALYSIS
W320, TANK 241-CC-106 SLUICING

PREPARED BY : _____
RC CAMPBELL

CHECKED BY : _____

PIPING CODE : B31.3

AMBIENT TEMP. (deg F) : 50.0

COMPONENT LIBRARY : AUTOPIPE

MATERIAL LIBRARY : AUTOB313

MODEL REVISION NUMBER : 4

POINT DATA LISTING

POINT NAME	TYPE	OFFSETS (ft) X	Y	Z	PIPE ID	DESCRIPTION
*** SEGMENT A						
A00	Run	0	0	0	3SCHED40	
A01	Bend	0	-0.44	0		Short Elbow, Radius = 3.00 inch Bend angle change = 90.00 deg SIF - In = 2.33, Out = 1.94
A02	Run	0	0	1.27		
A03	Bend	0	0	1.10		Short Elbow, Radius = 3.00 inch Bend angle change = 90.00 deg SIF - In = 2.33, Out = 1.94
A04	Valv	-1.96	0	0		Rating = 150, Weight = 119 lb Surface factor = 4.00, SIF = 1.00
A05	Run	-1.00	0	0		
A06	Bend	-0.25	0	0		Short Elbow, Radius = 3.00 inch Bend angle change = 90.00 deg SIF - In = 2.33, Out = 1.94
A07	Run	0	-0.38	0		

Total weight of empty pipes : 39 lb

ICF4-PRINT

C O M P O N E N T D A T A L I S T I N G

POINT NAME	---COORDINATE(ft)--- X	Y	Z	DATA TYPE	DESCRIPTION
*** SEGMENT A					
A00	0.00	0.00	0.00	ANCHOR	Rigid Thermal movements : None
A01 N	0.00	-0.19	0.00		
A01	0.00	-0.44	0.00	TI	
A01 F	0.00	-0.44	0.25		
A02	0.00	-0.44	1.27	FLANGE	Weld neck SIF = 1.00 Rating = 150, Weight = 12 lb
				FLANGE	Weld neck SIF = 1.00 Rating = 150, Weight = 12 lb
A03 N	0.00	-0.44	2.11		
A03	0.00	-0.44	2.36	TI	
A03 F	-0.25	-0.44	2.36		
A04	-1.96	-0.44	2.36	FLANGE	Weld neck SIF = 1.00 Rating = 150, Weight = 12 lb
A05	-2.96	-0.44	2.36	FLANGE	Weld neck SIF = 1.00 Rating = 150, Weight = 12 lb
A06 N	-2.97	-0.44	2.36		
A06	-3.21	-0.44	2.36	TI	
A06 F	-3.21	-0.69	2.36		
A07	-3.21	-0.82	2.36	ANCHOR	Rigid Thermal movements : None

Number of points in the system : 14

P I P E D A T A L I S T I N G

Pipe ID/ Material	Nom/ Sch	O.D. inch	-----Thickness(inch)----- W.Th.	Corr	Mill	Insu	Ling	Spec Grav	Weight(lb/ft) Pipe	Other	Total
3SCHED40	3.000	3.500	0.216	0.02	0.03	0	0	1.00	7.75	0	10.96
A312-TP304L	40S										

M A T E R I A L D A T A L I S T I N G

Material Name	Pipe ID	Density lb/cu.ft	Pois. Ratio	Temper. deg F	Modulus E6 psi	Expans. in/100ft	Allow. psi
A312-TP304L	3SCHED40	501.0	0.30	50.0	28.38		16700.0
				180.0		1.4413	16700.0

TEMPERATURE AND PRESSURE DATA

POINT NAME	-----CASE 1------ PRESS. psi	TEMPER deg F	EXPAN. in/100ft	-----CASE 2------ PRESS. psi	TEMPER deg F	EXPAN. in/100ft	-----CASE 3------ PRESS. psi	TEMPER deg F	EXPAN. in/100ft
*** SEGMENT A									
A00	150	180	1.441						
A07	150	180	1.441						

Point A00 A

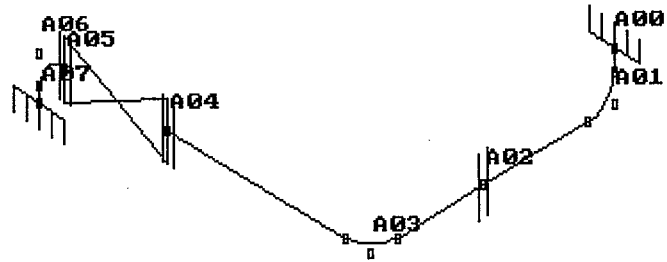

PROCESS BUILDING PIPING STRESS ANALYSIS
W320, TANK 241-CC-106 SLUICING

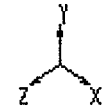

A N A L Y S I S S U M M A R Y

Current model revision number : 4

Static - Date and Time of analysis ..... Feb 22, 1995 2:48 PM
Model Revision Number 4
Number of load cases 5
Load cases analyzed ..... GR T1 E1 E2 P1
Gaps/Friction/Yielding considered ..... No
Hanger design run ..... No
Cut short included ..... No
Weight of contents included ..... Yes
Pressure stiffening case 0
Water elevation for buoyancy loads .... Not considered

CODE COMPLIANCE COMBINATIONS

Combination	Category	Method	Load	Factor	Allowable	Remarks
GR + Max P	Sustain	Sum	Gravity	1.00	Automatic	Default
			Max Long	1.00		
Cold to T1	Expansion	Sum	Thermal 1	1.00	Automatic	Default
Sus. + E1	Occasion	Abs sum	Earth 1	1.00	Automatic	Default
			Max Sus	1.00		
Sus. + E2	Occasion	Abs sum	Earth 2	1.00	Automatic	Default
			Max Sus	1.00		
Max P	Hoop		Max Hoop	1.00	Automatic	Default
SEIS	Occasion	SRSS	Earth 1	1.00	Automatic	User
			Earth 2	1.00		
SUS+SEIS	Occasion	Abs sum	Max Sus	1.00	Automatic	User
			SEIS	1.00		

OTHER USER COMBINATIONS

Combination	Method	Load	Factor	Remarks
GR	Sum	Gravity	1.00	Default
T1	Sum	Thermal 1	1.00	Default
E1	Sum	Earth 1	1.00	Default
E2	Sum	Earth 2	1.00	Default
P1	Sum	Press 1	1.00	Default
SEIS	Abs sum	Earth 1	1.00	User
		Earth 2	1.00	
GR+T1	Sum	Gravity	1.00	User
		Thermal 1	1.00	
GR+T1+P1+S	Abs sum	GR+T1	1.00	User
		SEIS	1.00	
		Press 1	1.00	

CODE COMPLIANCE

```
Y - Factor ............................ 0.40
Weld efficiency factor ................ 1.00
Range reduction factor ................ 1.00
Design Pressure Factor ................ 1.00
Minimum stress ratio used in reports... 0.00
Include corrosion in stress calcs. .... Y
Include torsion in code stress ........ N
Include axial force in code stress .... N
Longitudinal pressure calculation ..... PD/4t
Include rigorous pressure ............ N
```


EARTHQUAKE LOAD CASES :

Number of load cases analysed : 2

Load case 1 - E1

X-Multiplier= 0.120 Y-Multiplier= 0.000 Z-Multiplier= 0.000

Load case 2 - E2

X-Multiplier= 0.000 Y-Multiplier= 0.000 Z-Multiplier= 0.120

D I S P L A C E M E N T S

Point name	Load combination	TRANSLATIONS (in) X	Y	Z	ROTATIONS (deg) X	Y	Z
*** Segment A begin ***							
A00	GR	0.000	0.000	0.000	0.000	0.000	0.000
	T1	0.000	0.000	0.000	0.000	0.000	0.000
	E1	0.000	0.000	0.000	0.000	0.000	0.000
	E2	0.000	0.000	0.000	0.000	0.000	0.000
	P1	0.000	0.000	0.000	0.000	0.000	0.000
	SEIS	0.000	0.000	0.000	0.000	0.000	0.000
	GR+T1	0.000	0.000	0.000	0.000	0.000	0.000
	GR+T1+P1+S	0.000	0.000	0.000	0.000	0.000	0.000
A01 N	GR	0.000	0.000	0.000	0.001	0.000	0.000
	T1	0.000	-0.003	0.000	0.001	0.013	0.001
	E1	0.000	0.000	0.000	0.000	0.000	0.000
	E2	0.000	0.000	0.000	0.000	0.000	0.000
	P1	0.000	0.000	0.000	0.000	0.000	0.000
	SEIS	0.000	0.000	0.000	0.000	0.000	0.000
	GR+T1	0.000	-0.003	0.000	0.002	0.013	0.001
	GR+T1+P1+S	0.000	0.003	0.000	0.002	0.014	0.001
A01 F	GR	0.000	-0.001	0.000	0.018	0.000	-0.002
	T1	0.003	-0.006	0.004	-0.008	0.086	0.028
	E1	0.000	0.000	0.000	0.000	0.000	0.000
	E2	0.000	0.000	0.000	0.000	0.000	0.000
	P1	0.000	0.000	0.000	0.000	0.000	0.000
	SEIS	0.000	0.000	0.000	0.000	0.000	0.000
	GR+T1	0.003	-0.007	0.003	0.010	0.087	0.026
	GR+T1+P1+S	0.003	0.007	0.003	0.010	0.087	0.026
A02	GR	0.000	-0.005	0.000	0.020	0.001	-0.004
	T1	0.025	-0.004	0.018	-0.010	0.107	0.014
	E1	0.000	0.000	0.000	0.000	0.000	0.000
	E2	0.000	0.000	0.000	0.000	0.000	0.000
	P1	0.000	0.000	0.000	0.000	0.000	0.000
	SEIS	0.000	0.000	0.000	0.000	0.000	0.000
	GR+T1	0.025	-0.009	0.018	0.011	0.108	0.010
	GR+T1+P1+S	0.026	0.009	0.018	0.011	0.108	0.010
A03 N	GR	0.000	-0.008	0.000	0.019	0.001	-0.006
	T1	0.044	-0.003	0.030	-0.006	0.089	0.002
	E1	0.000	0.000	0.000	0.000	0.000	0.000
	E2	0.000	0.000	0.000	0.000	0.000	0.000
	P1	0.000	0.000	0.000	0.000	0.000	0.000
	SEIS	0.000	0.000	0.000	0.000	0.000	0.000
	GR+T1	0.044	-0.011	0.030	0.013	0.091	-0.003
	GR+T1+P1+S	0.044	0.011	0.030	0.013	0.091	0.004

D I S P L A C E M E N T S

Point name	Load combination	TRANSLATIONS (in) X	Y	Z	ROTATIONS (deg) X	Y	Z
A03 F	GR	0.000	-0.009	0.000	0.012	0.001	-0.011
	T1	0.043	-0.002	0.035	-0.001	-0.029	-0.008
	E1	0.000	0.000	0.000	0.000	0.000	0.000
	E2	0.000	0.000	0.000	0.000	0.000	0.000
	P1	0.000	0.000	0.000	0.000	0.000	0.000
	SEIS	0.000	0.000	0.000	0.000	0.000	0.000
	GR+T1	0.043	-0.011	0.034	0.012	-0.028	-0.019
	GR+T1+P1+S	0.043	0.011	0.035	0.012	0.028	0.019
A04	GR	0.000	-0.004	0.000	0.005	0.000	-0.016
	T1	0.018	0.002	0.015	0.019	-0.062	-0.014
	E1	0.000	0.000	0.000	0.000	0.000	0.000
	E2	0.000	0.000	0.000	0.000	0.000	0.000
	P1	0.000	0.000	0.000	0.000	0.000	0.000
	SEIS	0.000	0.000	0.000	0.000	0.000	0.000
	GR+T1	0.018	-0.002	0.015	0.023	-0.062	-0.030
	GR+T1+P1+S	0.019	0.002	0.015	0.024	0.062	0.030
A05	GR	0.000	-0.001	0.000	0.005	0.000	-0.016
	T1	0.004	0.005	0.002	0.019	-0.062	-0.014
	E1	0.000	0.000	0.000	0.000	0.000	0.000
	E2	0.000	0.000	0.000	0.000	0.000	0.000
	P1	0.000	0.000	0.000	0.000	0.000	0.000
	SEIS	0.000	0.000	0.000	0.000	0.000	0.000
	GR+T1	0.004	0.004	0.002	0.023	-0.061	-0.030
	GR+T1+P1+S	0.004	0.005	0.002	0.024	0.062	0.030
A06 N	GR	0.000	-0.001	0.000	0.005	0.000	-0.016
	T1	0.004	0.005	0.002	0.019	-0.062	-0.014
	E1	0.000	0.000	0.000	0.000	0.000	0.000
	E2	0.000	0.000	0.000	0.000	0.000	0.000
	P1	0.000	0.000	0.000	0.000	0.000	0.000
	SEIS	0.000	0.000	0.000	0.000	0.000	0.000
	GR+T1	0.004	0.004	0.002	0.023	-0.061	-0.030
	GR+T1+P1+S	0.004	0.005	0.002	0.024	0.062	0.030
A06 F	GR	0.000	0.000	0.000	0.000	0.000	-0.001
	T1	0.000	0.002	0.000	0.000	-0.007	0.001
	E1	0.000	0.000	0.000	0.000	0.000	0.000
	E2	0.000	0.000	0.000	0.000	0.000	0.000
	P1	0.000	0.000	0.000	0.000	0.000	0.000
	SEIS	0.000	0.000	0.000	0.000	0.000	0.000
	GR+T1	0.000	0.002	0.000	0.000	-0.006	0.000
	GR+T1+P1+S	0.000	0.002	0.000	0.001	0.007	0.000

D I S P L A C E M E N T S

Point name	Load combination	TRANSLATIONS (in) X	Y	Z	ROTATIONS (deg) X	Y	Z
A07	GR	0.000	0.000	0.000	0.000	0.000	0.000
	T1	0.000	0.000	0.000	0.000	0.000	0.000
	E1	0.000	0.000	0.000	0.000	0.000	0.000
	E2	0.000	0.000	0.000	0.000	0.000	0.000
	P1	0.000	0.000	0.000	0.000	0.000	0.000
	SEIS	0.000	0.000	0.000	0.000	0.000	0.000
	GR+T1	0.000	0.000	0.000	0.000	0.000	0.000
	GR+T1+P1+S	0.000	0.000	0.000	0.000	0.000	0.000

*** Segment A end ***

S U P P O R T F O R C E S

Point/ Supp. ID	Connect/ Type	Load Combination	L O C A L Dirn	Force	Deform	G L O B A L Dirn	Force	Deform

*** End of system , no supports encountered. ***

RESTRAINT REACTIONS

Point name	Load combination	FORCES (lb) X	Y	Z	Result	MOMENTS (ft-lb) X	Y	Z	Result
A00	Anchor								
	GR	3	-73	6	73	69	9	-14	71
	T1	459	66	-295	550	63	561	92	572
	E1	4	0	0	4	1	1	1	2
	E2	-1	0	12	12	-4	0	0	4
	P1	1	0	-1	1	0	1	0	1
	SEIS	4	0	12	13	5	1	1	5
	GR+T1	463	-7	-289	546	132	570	77	590
	GR+T1+P1+S	468	7	302	557	137	572	79	594
A07	Anchor								
	GR	-3	-151	-6	151	34	17	-72	81
	T1	-459	-66	295	550	22	-423	71	430
	E1	23	0	0	23	0	0	-7	7
	E2	1	0	15	15	5	-3	0	6
	P1	-1	0	1	1	0	-2	0	2
	SEIS	24	0	15	29	5	3	7	9
	GR+T1	-463	-217	289	587	55	-406	-1	410
	GR+T1+P1+S	488	218	306	616	61	411	8	416

GLOBAL FORCES & MOMENTS

Point name	Load combination	FORCES (lb) X	Y	Z	Result	MOMENTS (ft-lb) X	Y	Z	Result
*** Segment A begin ***									
A00	GR	-3	73	-6	73	-69	-9	14	71
	T1	-459	-66	295	550	-63	-561	-92	572
	E1	-4	0	0	4	-1	-1	-1	2
	E2	1	0	-12	12	4	0	0	4
	P1	-1	0	1	1	0	-1	0	1
	SEIS	4	0	12	13	5	1	1	5
	GR+T1	-463	7	289	546	-132	-570	-77	590
	GR+T1+P1+S	468	7	302	557	137	572	79	594
A01 N	GR	-3	71	-6	71	-70	-9	15	72
	T1	-459	-66	295	550	-7	-561	-5	561
	E1	-3	0	0	3	-1	-1	-1	1
	E2	1	0	-11	11	2	0	0	2
	P1	-1	0	1	1	0	-1	0	1
	SEIS	4	0	12	12	3	1	1	3
	GR+T1	-463	5	289	546	-77	-570	10	575
	GR+T1+P1+S	468	5	302	557	80	572	11	578
A01 F	GR	-3	66	-6	67	-55	-8	16	57
	T1	-459	-66	295	550	50	-446	110	462
	E1	-3	0	0	3	-1	0	0	1
	E2	1	0	-11	11	-1	0	0	1
	P1	-1	0	1	1	0	-1	0	1
	SEIS	4	0	11	12	1	0	0	1
	GR+T1	-463	0	289	546	-4	-454	126	471
	GR+T1+P1+S	467	1	301	556	6	455	126	472
A02 -	GR	-3	55	-6	55	7	-4	16	18
	T1	-459	-66	295	550	-17	22	110	113
	E1	-1	0	0	1	0	2	0	2
	E2	1	0	-9	10	-1	-1	0	1
	P1	-1	0	1	1	0	0	0	0
	SEIS	2	0	10	10	1	3	0	3
	GR+T1	-463	-11	289	546	-10	18	126	127
	GR+T1+P1+S	466	12	300	554	11	21	126	128
A02 +	GR	-3	32	-6	33	7	-4	16	18
	T1	-459	-66	295	550	-17	22	110	113
	E1	1	0	0	1	0	2	0	2
	E2	1	0	-7	7	-1	-1	0	1
	P1	-1	0	1	1	0	0	0	0
	SEIS	2	0	7	7	1	3	0	3
	GR+T1	-463	-34	289	547	-10	18	126	127
	GR+T1+P1+S	466	35	297	554	11	21	126	128

G L O B A L F O R C E S & M O M E N T S

Point name	Load combination	FORCES (lb) X	Y	Z	Result	MOMENTS (ft-lb) X	Y	Z	Result
A03 N	GR	-3	23	-6	24	30	-1	16	34
	T1	-459	-66	295	550	-73	410	110	431
	E1	2	0	0	3	0	0	0	0
	E2	1	0	-6	6	-1	-1	0	2
	P1	-1	0	1	1	0	1	0	1
	SEIS	3	0	6	7	1	2	0	2
	GR+T1	-463	-43	289	548	-42	409	126	430
	GR+T1+P1+S	467	44	296	555	44	412	126	433
A03 F	GR	-3	19	-6	20	36	1	21	42
	T1	-459	-66	295	550	-89	451	93	469
	E1	3	0	0	3	0	0	0	1
	E2	1	0	-5	5	-1	0	0	1
	P1	-1	0	1	1	0	1	0	1
	SEIS	4	0	5	7	1	1	0	1
	GR+T1	-463	-47	289	548	-54	452	114	469
	GR+T1+P1+S	468	48	296	555	55	454	115	471
A04 -	GR	-3	0	-6	7	36	10	37	52
	T1	-459	-66	295	550	-89	-54	-20	107
	E1	5	0	0	5	0	0	1	1
	E2	1	0	-3	3	-1	7	0	7
	P1	-1	0	1	1	0	-1	0	1
	SEIS	6	0	3	7	1	7	1	7
	GR+T1	-463	-66	289	550	-54	-44	17	71
	GR+T1+P1+S	470	67	293	558	55	51	18	77
A04 +	GR	-3	-12	-6	13	36	10	37	52
	T1	-459	-66	295	550	-89	-54	-20	107
	E1	7	0	0	7	0	0	1	1
	E2	1	0	-1	2	-1	7	0	7
	P1	-1	0	1	1	0	-1	0	1
	SEIS	7	0	2	8	1	7	1	7
	GR+T1	-463	-78	289	551	-54	-44	17	71
	GR+T1+P1+S	471	78	292	560	55	51	18	77
A05 -	GR	-3	-134	-6	134	36	16	-36	53
	T1	-459	-66	295	550	-89	-349	-86	371
	E1	21	0	0	21	0	0	2	2
	E2	1	0	13	13	-1	1	0	1
	P1	-1	0	1	1	0	-2	0	2
	SEIS	22	0	13	26	1	1	2	2
	GR+T1	-463	-200	289	581	-54	-333	-122	359
	GR+T1+P1+S	486	200	304	607	55	336	124	362

G L O B A L F O R C E S & M O M E N T S

Point name	Load combination	FORCES (lb) X	Y	Z	Result	MOMENTS (ft-lb) X	Y	Z	Result
A05 +	GR	-3	-145	-6	145	36	16	-36	53
	T1	-459	-66	295	550	-89	-349	-86	371
	E1	23	0	0	23	0	0	2	2
	E2	1	0	15	15	-1	1	0	1
	P1	-1	0	1	1	0	-2	0	2
	SEIS	23	0	15	28	1	1	2	2
	GR+T1	-463	-211	289	585	-54	-333	-122	359
	GR+T1+P1+S	487	212	305	613	55	336	124	362
A06 N	GR	-3	-145	-6	145	36	16	-36	54
	T1	-459	-66	295	550	-89	-350	-86	371
	E1	23	0	0	23	0	0	2	2
	E2	1	0	15	15	-1	1	0	1
	P1	-1	0	1	1	0	-2	0	2
	SEIS	23	0	15	28	1	1	2	2
	GR+T1	-463	-211	289	585	-54	-334	-122	360
	GR+T1+P1+S	487	212	305	613	55	337	125	363
A06 F	GR	-3	-149	-6	150	34	17	-72	82
	T1	-459	-66	295	550	-16	-423	12	424
	E1	23	0	0	23	0	0	-4	4
	E2	1	0	15	15	3	-3	0	4
	P1	-1	0	1	1	0	-2	0	2
	SEIS	24	0	15	28	3	3	4	6
	GR+T1	-463	-215	289	587	18	-406	-60	411
	GR+T1+P1+S	488	216	306	615	22	411	65	417
A07	GR	-3	-151	-6	151	34	17	-72	81
	T1	-459	-66	295	550	22	-423	71	430
	E1	23	0	0	23	0	0	-7	7
	E2	1	0	15	15	5	-3	0	6
	P1	-1	0	1	1	0	-2	0	2
	SEIS	24	0	15	29	5	3	7	9
	GR+T1	-463	-217	289	587	55	-406	-1	410
	GR+T1+P1+S	488	218	306	616	61	411	8	416

*** Segment A end ***

ASME B31.3c (1992) CODE COMPLIANCE

Point name	Load combination	(Moments in ft-lb) In-Pl. Moment	Out-Pl. Moment	Torsion Moment	S.I.F In	S.I.F Out	Eq. no.	(Stress in psi) Load type	Code Stress	Code Allow.
*** Segment A begin ***										
A00	Max P						(3a)	HOOP	1493	16700
	GR + Max P	69	14		1.00	1.00	(18)	SUST	1201	16700
	Cold to T1	63	92	561	1.00	1.00	(17)	DISP	3982	25050
	Sus. + E1	70	16		1.00	1.00	(18)	OCC	1211	22211
	Sus. + E2	73	15		1.00	1.00	(18)	OCC	1232	22211
	SEIS	4	1		1.00	1.00	(18)	OCC	32	22211
	SUS+SEIS	73	16		1.00	1.00	(18)	OCC	1234	22211
A01 N-	Max P						(3a)	HOOP	1493	16700
	GR + Max P	70	15		1.00	1.00	(18)	SUST	1210	16700
	Cold to T1	7	5	561	1.00	1.00	(17)	DISP	3906	25050
	Sus. + E1	71	16		1.00	1.00	(18)	OCC	1216	22211
	Sus. + E2	72	15		1.00	1.00	(18)	OCC	1225	22211
	SEIS	2	1		1.00	1.00	(18)	OCC	16	22211
	SUS+SEIS	72	16		1.00	1.00	(18)	OCC	1226	22211
A01 N+	Max P						(3a)	HOOP	1493	16700
	GR + Max P	70	15		2.33	1.94	(18)	SUST	1920	16700
	Cold to T1	7	5	561	2.33	1.94	(17)	DISP	3908	25050
	Sus. + E1	71	16		2.33	1.94	(18)	OCC	1933	22211
	Sus. + E2	72	15		2.33	1.94	(18)	OCC	1954	22211
	SEIS	2	1		2.33	1.94	(18)	OCC	36	22211
	SUS+SEIS	72	16		2.33	1.94	(18)	OCC	1956	22211
A01 F-	Max P						(3a)	HOOP	1493	16700
	GR + Max P	55	8		2.33	1.94	(18)	SUST	1634	16700
	Cold to T1	50	446	110	2.33	1.94	(17)	DISP	6129	25050
	Sus. + E1	55	8		2.33	1.94	(18)	OCC	1645	22211
	Sus. + E2	55	8		2.33	1.94	(18)	OCC	1649	22211
	SEIS	1	0		2.33	1.94	(18)	OCC	18	22211
	SUS+SEIS	56	8		2.33	1.94	(18)	OCC	1653	22211
A01 F+	Max P						(3a)	HOOP	1493	16700
	GR + Max P	55	8		1.00	1.00	(18)	SUST	1085	16700
	Cold to T1	50	446	110	1.00	1.00	(17)	DISP	3218	25050
	Sus. + E1	55	8		1.00	1.00	(18)	OCC	1090	22211
	Sus. + E2	55	8		1.00	1.00	(18)	OCC	1092	22211
	SEIS	1	0		1.00	1.00	(18)	OCC	8	22211
	SUS+SEIS	56	8		1.00	1.00	(18)	OCC	1093	22211

ASME B31.3c (1992) CODE COMPLIANCE

Point name	Load combination	(Moments in ft-lb) In-Pl. Moment	Out-Pl. Moment	Torsion Moment	S.I.F In	S.I.F Out	Eq. no.	(Stress in psi) Load type	Code Stress	Code Allow.
A02	Max P						(3a)	HOOP	1493	16700
	GR + Max P	7	4		1.00	1.00	(18)	SUST	734	16700
	Cold to T1	17	22	110	1.00	1.00	(17)	DISP	788	25050
	Sus. + E1	7	6		1.00	1.00	(18)	OCC	748	22211
	Sus. + E2	8	5		1.00	1.00	(18)	OCC	742	22211
	SEIS	1	2		1.00	1.00	(18)	OCC	16	22211
	SUS+SEIS	8	6		1.00	1.00	(18)	OCC	750	22211
A03 N-	Max P						(3a)	HOOP	1493	16700
	GR + Max P	30	1		1.00	1.00	(18)	SUST	900	16700
	Cold to T1	73	410	110	1.00	1.00	(17)	DISP	2999	25050
	Sus. + E1	31	2		1.00	1.00	(18)	OCC	902	22211
	Sus. + E2	31	3		1.00	1.00	(18)	OCC	912	22211
	SEIS	1	1		1.00	1.00	(18)	OCC	12	22211
	SUS+SEIS	31	3		1.00	1.00	(18)	OCC	912	22211
A03 N+	Max P						(3a)	HOOP	1493	16700
	GR + Max P	1	30		2.33	1.94	(18)	SUST	1116	16700
	Cold to T1	410	73	110	2.33	1.94	(17)	DISP	6764	25050
	Sus. + E1	2	31		2.33	1.94	(18)	OCC	1122	22211
	Sus. + E2	3	31		2.33	1.94	(18)	OCC	1143	22211
	SEIS	1	1		2.33	1.94	(18)	OCC	27	22211
	SUS+SEIS	3	31		2.33	1.94	(18)	OCC	1143	22211
A03 F-	Max P						(3a)	HOOP	1493	16700
	GR + Max P	1	21		2.33	1.94	(18)	SUST	977	16700
	Cold to T1	451	93	89	2.33	1.94	(17)	DISP	7448	25050
	Sus. + E1	1	21		2.33	1.94	(18)	OCC	986	22211
	Sus. + E2	1	21		2.33	1.94	(18)	OCC	981	22211
	SEIS	0	0		2.33	1.94	(18)	OCC	10	22211
	SUS+SEIS	1	21		2.33	1.94	(18)	OCC	987	22211
A03 F+	Max P						(3a)	HOOP	1493	16700
	GR + Max P	21	1		1.00	1.00	(18)	SUST	828	16700
	Cold to T1	93	451	89	1.00	1.00	(17)	DISP	3268	25050
	Sus. + E1	21	1		1.00	1.00	(18)	OCC	832	22211
	Sus. + E2	21	1		1.00	1.00	(18)	OCC	830	22211
	SEIS	0	0		1.00	1.00	(18)	OCC	4	22211
	SUS+SEIS	21	1		1.00	1.00	(18)	OCC	832	22211
A04	Max P						(3a)	HOOP	1493	16700
	GR + Max P	37	10		1.00	1.00	(18)	SUST	957	16700
	Cold to T1	20	54	89	1.00	1.00	(17)	DISP	742	25050
	Sus. + E1	38	10		1.00	1.00	(18)	OCC	965	22211
	Sus. + E2	37	17		1.00	1.00	(18)	OCC	1006	22211
	SEIS	1	7		1.00	1.00	(18)	OCC	50	22211
	SUS+SEIS	38	17		1.00	1.00	(18)	OCC	1007	22211

ASME B31.3c (1992) CODE COMPLIANCE

Point name	Load combination	(Moments in ft-lb) In-Pl. Moment	Out-Pl. Moment	Torsion Moment	S.I.F In	S.I.F Out	Eq. no.	(Stress in psi) Load type	Code Stress	Code Allow.
A05	Max P						(3a)	HOOP	1493	16700
	GR + Max P	36	16		1.00	1.00	(18)	SUST	967	16700
	Cold to T1	86	349	89	1.00	1.00	(17)	DISP	2580	25050
	Sus. + E1	38	16		1.00	1.00	(18)	OCC	979	22211
	Sus. + E2	36	17		1.00	1.00	(18)	OCC	973	22211
	SEIS	2	1		1.00	1.00	(18)	OCC	13	22211
	SUS+SEIS	38	17		1.00	1.00	(18)	OCC	980	22211
A06 N-	Max P						(3a)	HOOP	1493	16700
	GR + Max P	36	16		1.00	1.00	(18)	SUST	969	16700
	Cold to T1	86	350	89	1.00	1.00	(17)	DISP	2585	25050
	Sus. + E1	38	16		1.00	1.00	(18)	OCC	981	22211
	Sus. + E2	37	17		1.00	1.00	(18)	OCC	974	22211
	SEIS	2	1		1.00	1.00	(18)	OCC	13	22211
	SUS+SEIS	38	17		1.00	1.00	(18)	OCC	982	22211
A06 N+	Max P						(3a)	HOOP	1493	16700
	GR + Max P	36	16		2.33	1.94	(18)	SUST	1349	16700
	Cold to T1	86	350	91	2.33	1.94	(17)	DISP	4963	25050
	Sus. + E1	38	16		2.33	1.94	(18)	OCC	1377	22211
	Sus. + E2	37	17		2.33	1.94	(18)	OCC	1359	22211
	SEIS	2	1		2.33	1.94	(18)	OCC	30	22211
	SUS+SEIS	38	17		2.33	1.94	(18)	OCC	1379	22211
A06 F-	Max P						(3a)	HOOP	1493	16700
	GR + Max P	72	34		2.33	1.94	(18)	SUST	2030	16700
	Cold to T1	12	14	423	2.33	1.94	(17)	DISP	2960	25050
	Sus. + E1	76	35		2.33	1.94	(18)	OCC	2101	22211
	Sus. + E2	72	37		2.33	1.94	(18)	OCC	2074	22211
	SEIS	4	3		2.33	1.94	(18)	OCC	83	22211
	SUS+SEIS	76	37		2.33	1.94	(18)	OCC	2113	22211
A06 F+	Max P						(3a)	HOOP	1493	16700
	GR + Max P	34	72		1.00	1.00	(18)	SUST	1272	16700
	Cold to T1	16	12	423	1.00	1.00	(17)	DISP	2950	25050
	Sus. + E1	35	76		1.00	1.00	(18)	OCC	1302	22211
	Sus. + E2	37	72		1.00	1.00	(18)	OCC	1294	22211
	SEIS	3	4		1.00	1.00	(18)	OCC	38	22211
	SUS+SEIS	37	76		1.00	1.00	(18)	OCC	1309	22211
A07	Max P						(3a)	HOOP	1493	16700
	GR + Max P	34	72		1.00	1.00	(18)	SUST	1266	16700
	Cold to T1	22	71	423	1.00	1.00	(17)	DISP	2991	25050
	Sus. + E1	34	79		1.00	1.00	(18)	OCC	1319	22211
	Sus. + E2	39	72		1.00	1.00	(18)	OCC	1303	22211
	SEIS	5	7		1.00	1.00	(18)	OCC	64	22211
	SUS+SEIS	39	79		1.00	1.00	(18)	OCC	1331	22211

*** Segment A end ***

SYSTEM SUMMARY

Maximum displacements (in)

Maximum X :	0.044	Point : A03 N	Load Comb.: GR+T1+P1+S
Maximum Y :	0.011	Point : A03 F	Load Comb.: GR+T1+P1+S
Maximum Z :	0.035	Point : A03 F	Load Comb.: T1
Max. total:	0.056	Point : A03 F	Load Comb.: GR+T1+P1+S

Maximum rotations (deg)

Maximum X :	0.024	Point : A06 N	Load Comb.: GR+T1+P1+S
Maximum Y :	0.108	Point : A02	Load Comb.: GR+T1+P1+S
Maximum Z :	0.030	Point : A04	Load Comb.: GR+T1+P1+S
Max. total:	0.109	Point : A02	Load Comb.: GR+T1+P1+S

Maximum restraint forces(lb)

Maximum X :	488	Point : A07	Load Comb.: GR+T1+P1+S
Maximum Y :	218	Point : A07	Load Comb.: GR+T1+P1+S
Maximum Z :	306	Point : A07	Load Comb.: GR+T1+P1+S
Max. total:	616	Point : A07	Load Comb.: GR+T1+P1+S

Maximum restraint moments(ft-lb)

Maximum X :	137	Point : A00	Load Comb.: GR+T1+P1+S
Maximum Y :	572	Point : A00	Load Comb.: GR+T1+P1+S
Maximum Z :	92	Point : A00	Load Comb.: T1
Max. total:	594	Point : A00	Load Comb.: GR+T1+P1+S

S Y S T E M S U M M A R Y

Maximum pipe forces (lb)

Maximum X :	488	Point : A07	Load Comb.: GR+T1+P1+S
Maximum Y :	218	Point : A07	Load Comb.: GR+T1+P1+S
Maximum Z :	306	Point : A07	Load Comb.: GR+T1+P1+S
Max. total:	616	Point : A07	Load Comb.: GR+T1+P1+S

Maximum pipe moments (ft-lb)

Maximum X :	137	Point : A00	Load Comb.: GR+T1+P1+S
Maximum Y :	572	Point : A00	Load Comb.: GR+T1+P1+S
Maximum Z :	126	Point : A01 F	Load Comb.: GR+T1+P1+S
Max. total:	594	Point : A00	Load Comb.: GR+T1+P1+S

S Y S T E M S U M M A R Y

Maximum sustained stress

Point : A06 F
Stress psi : 2030
Allowable psi : 16700
Ratio : 0.12
Load combination : GR + Max P

Maximum displacement stress

Point : A03 F
Stress psi : 7448
Allowable psi : 25050
Ratio : 0.30
Load combination : Cold to T1

Maximum occasional stress

Point : A06 F
Stress psi : 2113
Allowable psi : 22211
Ratio : 0.10
Load combination : SUS+SEIS

Maximum hoop stress

Point : A00
Stress psi : 1493
Allowable psi : 16700
Ratio : 0.09
Load combination : Max P

Maximum sustained stress ratio

Point : A06 F
Stress psi : 2030
Allowable psi : 16700
Ratio : 0.12
Load combination : GR + Max P

Maximum displacement stress ratio

Point : A03 F
Stress psi : 7448
Allowable psi : 25050
Ratio : 0.30
Load combination : Cold to T1

S Y S T E M S U M M A R Y

Maximum occasional stress ratio

Point	: A06 F
Stress psi	: 2113
Allowable psi	: 22211
Ratio	: 0.10
Load combination	: SUS+SEIS

Maximum hoop stress ratio

Point	: A00
Stress psi	: 1493
Allowable psi	: 16700
Ratio	: 0.09
Load combination	: Max P

* * * The system satisfies ASME B31.3 code requirements * * *
* * * for the selected options * * *

```
**************************************************************
**                                                          **
**              AUTOPIPE SYSTEM DATA LISTING                **
**                                                          **
**************************************************************
```

SYSTEM NAME : W320H32C

PROJECT ID : PROCESS BUILDING PIPING STRESS ANALYSIS
W320, TANK 241-C-106, ER4319 H-2-818480

PREPARED BY : _____
RC CAMPBELL

CHECKED BY : _____

PIPING CODE : B31.3

AMBIENT TEMP. (deg F) : 50.0

COMPONENT LIBRARY : AUTOPIPE

MATERIAL LIBRARY : AUTOB313

MODEL REVISION NUMBER : 20

POINT DATA LISTING

POINT NAME	TYPE	OFFSETS (ft) X	Y	Z	PIPE ID	DESCRIPTION
*** SEGMENT A						
A00	Redu	0	0	0	6SCHED40	
A01	Run	0	0	0.50	8SCHED40	
A02	Tee	0	0	0.58		
A03	Bend	0	0	1.58		Long Elbow, Radius = 12.00 inch Bend angle change = 90.00 deg SIF - In = 2.44, Out = 2.03
A04	Redu	-1.33	0	0		
A05	Run	-1.33	0	0	HEATER	
A06	Redu	-1.00	0	0		
A07	Run	-1.33	0	0	8SCHED40	
A08	Bend	-1.33	0	0		Long Elbow, Radius = 12.00 inch Bend angle change = 90.00 deg SIF - In = 2.44, Out = 2.03
A09	Run	0	0	-1.32		
A10	Run	0	0	-3.34		
A11	Flex	0	0	-0.50		Wt= 35 lb , Ar= 74.4 sq.in Axial = 1040.0 Tors= RIGID Y-Shear= RIGID Bend= RIGID Z-Shear= RIGID Bend= RIGID
A12	Run	0	0	-0.50		
*** SEGMENT B						
A02	Tee	0	0	1.08	8SCHED40	
B01	Bend	0	1.25	0		Long Elbow, Radius = 12.00 inch Bend angle change = 90.00 deg SIF - In = 2.44, Out = 2.03
B02	Run	0	0	1.83		
B03	Run	0	0	0.17		

Total weight of empty pipes : 457 lb

C O M P O N E N T D A T A L I S T I N G

```
POINT  ---COORDINATE(ft  )---  DATA
NAME     X       Y       Z    TYPE  DESCRIPTION
----- ------- ------- ------- ------ ----------------------------------------
*** SEGMENT A
A00      0.00    0.00    0.00 ANCHOR Rigid
                                     Thermal movements : None
                                FLANGE Weld neck          SIF = 1.00
                                     Rating = 150, Weight = 24 lb

A01      0.00    0.00    0.50
A02      0.00    0.00    1.08 TEE    B16.9 welding tee
                                     SIF - In = 1.63, Out = 1.84
A03 N    0.00    0.00    1.67
A03      0.00    0.00    2.67 TI
A03 F   -1.00    0.00    2.67
A04     -1.33    0.00    2.67 FLANGE Weld neck          SIF = 1.00
                                     Rating = 150, Weight = 39 lb
                                FLANGE Weld neck          SIF = 1.00
                                     Rating = 150, Weight = 39 lb
A05     -2.66    0.00    2.67 ANCHOR Rigid
                                     Thermal movements : None
A06     -3.66    0.00    2.67 ANCHOR Rigid
                                     Thermal movements : None
A07     -5.00    0.00    2.67 FLANGE Weld neck          SIF = 1.00
                                     Rating = 150, Weight = 39 lb
                                FLANGE Weld neck          SIF = 1.00
                                     Rating = 150, Weight = 39 lb
A08 N   -5.33    0.00    2.67
A08     -6.33    0.00    2.67 TI
A08 F   -6.33    0.00    1.67
A09     -6.33    0.00    1.34
A10     -6.33    0.00   -2.00 Y-STOP ID : A10  1, Connected to Ground
                                     Gap-Below = 0.00, Above = 1.50 inch
                                     Friction = 0.00
                                     Gaps set Weightless
A11     -6.33    0.00   -2.50 FLANGE Weld neck          SIF = 1.00
                                     Rating = 150, Weight = 39 lb
A12     -6.33    0.00   -3.00 ANCHOR Rigid
                                     Thermal movements : None
                                FLANGE Weld neck          SIF = 1.00
                                     Rating = 150, Weight = 39 lb

*** SEGMENT B
A02      0.00    0.00    1.08 TEE    B16.9 welding tee
                                     SIF - In = 1.63, Out = 1.84
B01 N    0.00    0.25    1.08
B01      0.00    1.25    1.08 TI
B01 F    0.00    1.25    2.08
B02      0.00    1.25    2.92 Y-STOP ID : B02  1, Connected to Ground
                                     Gap-Below = 0.00, Above = 1.50 inch
                                     Friction = 0.00
                                     Gaps set Weightless
B03      0.00    1.25    3.08 FLANGE Weld neck          SIF = 1.00
```


C O M P O N E N T D A T A L I S T I N G

```
POINT  ---COORDINATE(ft  )---  DATA
NAME     X       Y       Z    TYPE  DESCRIPTION
----- ------- ------- ------- ------ ----------------------------------------
                                     Rating = 150, Weight = 39 lb

Number of points in the system : 23
```

P I P E D A T A L I S T I N G

Pipe ID/ Material	Nom/ Sch	O.D. inch	-----Thickness(inch)----- W.Th.	Corr	Mill	Insu	Ling	Spec Grav	Weight(lb/ft) Pipe	Other	Total
6SCHED40 A312-TP304L	6 40S	6.625	0.280	0.02	0.04	1.25	0.02	0	19.42	2.82	22.24
8SCHED40 A312-TP304L	8 40S	8.625	0.322	0.02	0.04	1.25	0.02	0	29.22	4.13	33.36
HEATER A312-TP304L	NS	29.940	0.134	0.02	0.01	1.25	0.02	0	43.82	14.48	58.30

M A T E R I A L D A T A L I S T I N G

Material Name	Pipe ID	Density lb/cu.ft	Pois. Ratio	Temper. deg F	Modulus E6 psi	Expans. in/100ft	Allow. psi
A312-TP304L	6SCHED40	501.0	0.30	50.0	28.38		16700.0
				180.0		1.4413	16700.0
A312-TP304L	8SCHED40	501.0	0.30	50.0	28.38		16700.0
				180.0		1.4413	16700.0
A312-TP304L	HEATER	501.0	0.30	50.0	28.38		16700.0
				180.0		1.4413	16700.0

TEMPERATURE AND PRESSURE DATA

POINT NAME	-----C A S E 1------ PRESS. psi	TEMPER deg F	EXPAN. in/100ft	-----C A S E 2------ PRESS. psi	TEMPER deg F	EXPAN. in/100ft	-----C A S E 3------ PRESS. psi	TEMPER deg F	EXPAN. in/100ft
*** SEGMENT A									
A00	-0.84	180	1.441						
A12	-0.84	180	1.441						
*** SEGMENT B									
A02	-0.84	180	1.441						
B03	-0.84	180	1.441						

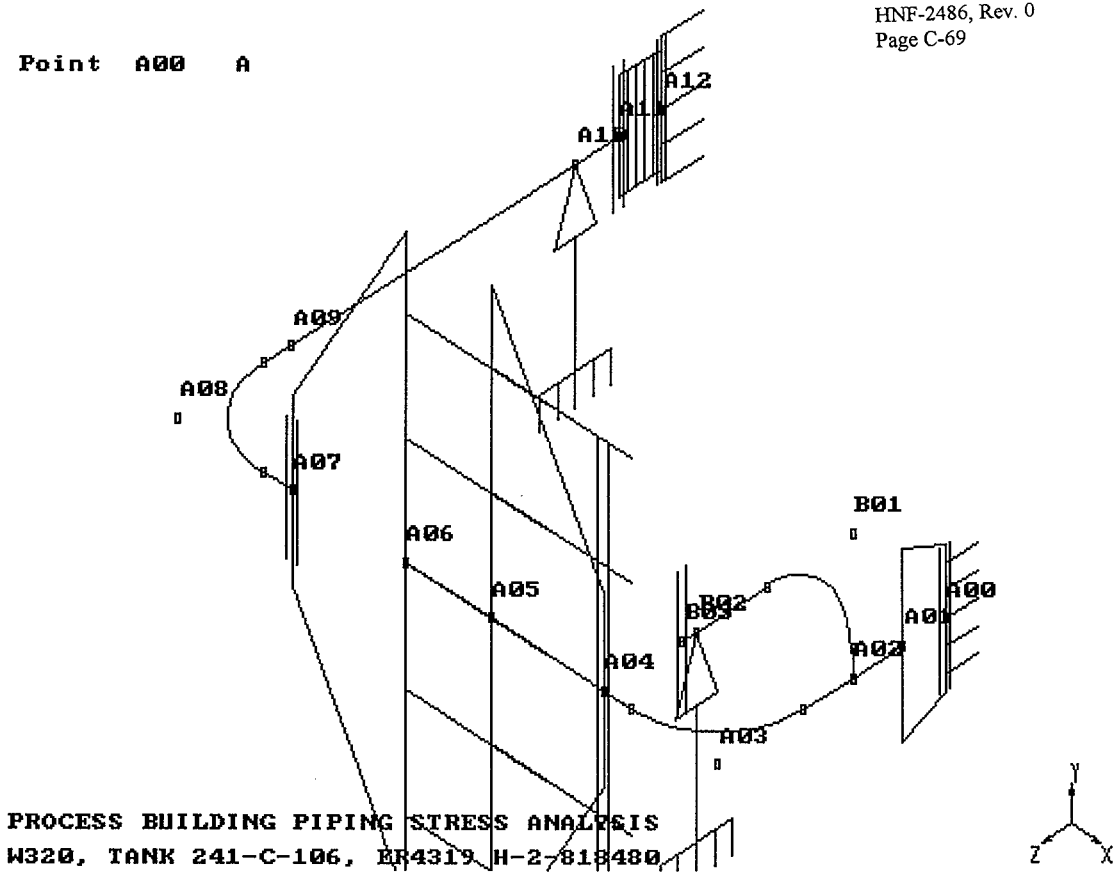
Point A00 A
A12
A11
A10
A09
A08
A07
A06
A05
A04
A03
A02
A01
A00
B01
B02
B03
Y
Z
X
PROCESS BUILDING PIPING STRESS ANALYSIS
W320, TANK 241-C-106, ER4319 H-2-818480

A N A L Y S I S S U M M A R Y

Current model revision number : 20

```
Static - Date and Time of analysis ............. Feb 22, 1995   2:48 PM
         Model Revision Number ................ 20
         Number of load cases ................. 4
         Load cases analyzed .................. GR T1 E1 E2
         Gaps/Friction/Yielding considered ..... Yes
         Tolerance - Force, Displacement ...... 100.00 lb   0.0162 in
         Friction - Factor, tolerance ......... 1.00   0.10
         Hanger design run .................... No
         Cut short included ................... No
         Occasional load analysis type ........ Nonlinear
         Non-linear analysis summary file ..... W320H32C.LOG
         Base load cases for nonlinear analysis
                                                GR = None
                                                T1 = GR
                                                E1 = GR
                                                E2 = GR
         Weight of contents included ........... Yes
         Pressure stiffening case .............. 0
         Water elevation for buoyancy loads .... Not considered
```


CODE COMPLIANCE COMBINATIONS

Combination	Category	Method	Load	Factor	Allowable	Remarks
GR + Max P	Sustain	Sum	Gravity	1.00	Automatic	Default
			Max Long	1.00		
Cold to T1	Expansion	Sum	Thermal 1	1.00	Automatic	Default
Sus. + E1	Occasion	Abs sum	Earth 1	1.00	Automatic	Default
			Max Sus	1.00		
Sus. + E2	Occasion	Abs sum	Earth 2	1.00	Automatic	Default
			Max Sus	1.00		
Max P	Hoop		Max Hoop	1.00	Automatic	Default
SEIS	Occasion	Abs sum	Earth 1	1.00	Automatic	User
			Earth 2	1.00		
SUS+SEIS	Occasion	Abs sum	Max Sus	1.00	Automatic	User
			SEIS	1.00		

OTHER USER COMBINATIONS

Combination	Method	Load	Factor	Remarks
GR	Sum	Gravity	1.00	Default
T1	Sum	Thermal 1	1.00	Default
E1	Sum	Earth 1	1.00	Default
E2	Sum	Earth 2	1.00	Default
SEIS	Abs sum	Earth 1	1.00	User
		Earth 2	1.00	
GR+T1	Sum	Gravity	1.00	User
		Thermal 1	1.00	
GR+T1+SEIS	Abs sum	GR+T1	1.00	User
		SEIS	1.00	

CODE COMPLIANCE

```
Y - Factor ............................ 0.40
Weld efficiency factor ................ 1.00
Range reduction factor ................ 1.00
```

```
Design Pressure Factor ............... 1.00
Minimum stress ratio used in reports... 0.00
Include corrosion in stress calcs. .... Y
Include torsion in code stress ........ N
Include axial force in code stress .... N
Longitudinal pressure calculation ..... PD/4t
Include rigorous pressure ............. Not analyzed
```


EARTHQUAKE LOAD CASES :

Number of load cases analysed : 2

Load case 1 - E1

X-Multiplier= 0.120 Y-Multiplier= 0.000 Z-Multiplier= 0.000

Load case 2 - E2

X-Multiplier= 0.000 Y-Multiplier= 0.000 Z-Multiplier= 0.120

D I S P L A C E M E N T S

Point name	Load combination	TRANSLATIONS (in) X	Y	Z	ROTATIONS (deg) X	Y	Z
*** Segment A begin ***							
A00	GR	0.000	0.000	0.000	0.000	0.000	0.000
	T1	0.000	0.000	0.000	0.000	0.000	0.000
	E1	0.000	0.000	0.000	0.000	0.000	0.000
	E2	0.000	0.000	0.000	0.000	0.000	0.000
	SEIS	0.000	0.000	0.000	0.000	0.000	0.000
	GR+T1	0.000	0.000	0.000	0.000	0.000	0.000
	GR+T1+SEIS	0.000	0.000	0.000	0.000	0.000	0.000
A01	GR	0.000	0.000	0.000	0.000	0.000	0.000
	T1	0.007	0.000	0.006	0.000	0.071	0.000
	E1	0.000	0.000	0.000	0.000	0.000	0.000
	E2	0.000	0.000	0.000	0.000	0.000	0.000
	SEIS	0.000	0.000	0.000	0.000	0.000	0.000
	GR+T1	0.007	0.000	0.006	0.001	0.071	0.000
	GR+T1+SEIS	0.007	0.000	0.006	0.001	0.071	0.000
A02	GR	0.000	0.000	0.000	0.000	0.000	0.000
	T1	0.021	0.000	0.014	0.001	0.101	0.000
	E1	0.000	0.000	0.000	0.000	0.000	0.000
	E2	0.000	0.000	0.000	0.000	0.000	0.000
	SEIS	0.000	0.000	0.000	0.000	0.000	0.000
	GR+T1	0.021	0.000	0.014	0.001	0.101	0.000
	GR+T1+SEIS	0.021	0.000	0.014	0.001	0.101	0.000
A03 N	GR	0.000	0.000	0.000	0.000	0.000	0.000
	T1	0.036	0.000	0.021	0.000	0.106	0.000
	E1	0.000	0.000	0.000	0.000	0.000	0.000
	E2	0.000	0.000	0.000	0.000	0.000	0.000
	SEIS	0.000	0.000	0.000	0.000	0.000	0.000
	GR+T1	0.036	0.000	0.021	0.001	0.106	0.000
	GR+T1+SEIS	0.036	0.000	0.021	0.001	0.106	0.000
A03 F	GR	0.000	0.000	0.000	0.000	0.000	0.000
	T1	0.023	0.000	0.017	0.000	-0.048	0.000
	E1	0.000	0.000	0.000	0.000	0.000	0.000
	E2	0.000	0.000	0.000	0.000	0.000	0.000
	SEIS	0.000	0.000	0.000	0.000	0.000	0.000
	GR+T1	0.023	0.000	0.017	0.000	-0.048	0.000
	GR+T1+SEIS	0.023	0.000	0.017	0.000	0.048	0.000

D I S P L A C E M E N T S

Point name	Load combination	TRANSLATIONS (in) X	Y	Z	ROTATIONS (deg) X	Y	Z
A04	GR	0.000	0.000	0.000	0.000	0.000	0.000
	T1	0.018	0.000	0.011	0.000	-0.027	0.000
	E1	0.000	0.000	0.000	0.000	0.000	0.000
	E2	0.000	0.000	0.000	0.000	0.000	0.000
	SEIS	0.000	0.000	0.000	0.000	0.000	0.000
	GR+T1	0.018	0.000	0.011	0.000	-0.027	0.000
	GR+T1+SEIS	0.018	0.000	0.011	0.000	0.027	0.000
A05	GR	0.000	0.000	0.000	0.000	0.000	0.000
	T1	0.000	0.000	0.000	0.000	0.000	0.000
	E1	0.000	0.000	0.000	0.000	0.000	0.000
	E2	0.000	0.000	0.000	0.000	0.000	0.000
	SEIS	0.000	0.000	0.000	0.000	0.000	0.000
	GR+T1	0.000	0.000	0.000	0.000	0.000	0.000
	GR+T1+SEIS	0.000	0.000	0.000	0.000	0.000	0.000
A06	GR	0.000	0.000	0.000	0.000	0.000	0.000
	T1	0.000	0.000	0.000	0.000	0.000	0.000
	E1	0.000	0.000	0.000	0.000	0.000	0.000
	E2	0.000	0.000	0.000	0.000	0.000	0.000
	SEIS	0.000	0.000	0.000	0.000	0.000	0.000
	GR+T1	0.000	0.000	0.000	0.000	0.000	0.000
	GR+T1+SEIS	0.000	0.000	0.000	0.000	0.000	0.000
A07	GR	0.000	0.000	0.000	0.000	0.000	0.000
	T1	-0.019	0.000	0.000	0.000	-0.001	0.000
	E1	0.000	0.000	0.000	0.000	0.000	0.000
	E2	0.000	0.000	0.000	0.000	0.000	0.000
	SEIS	0.000	0.000	0.000	0.000	0.000	0.000
	GR+T1	-0.019	0.000	0.000	0.000	-0.001	0.000
	GR+T1+SEIS	0.019	0.000	0.000	0.000	0.001	0.000
A08 N	GR	0.000	0.000	0.000	0.000	0.000	0.000
	T1	-0.024	0.000	0.000	0.000	-0.003	0.000
	E1	0.000	0.000	0.000	0.000	0.000	0.000
	E2	0.000	0.000	0.000	0.000	0.000	0.000
	SEIS	0.000	0.000	0.000	0.000	0.000	0.000
	GR+T1	-0.024	0.000	0.000	0.000	-0.003	0.000
	GR+T1+SEIS	0.024	0.000	0.000	0.000	0.003	0.000
A08 F	GR	0.000	0.000	0.000	0.000	0.000	0.000
	T1	-0.030	0.000	-0.020	0.000	-0.049	0.000
	E1	0.000	0.000	0.000	0.000	0.000	0.000
	E2	0.000	0.000	0.000	0.000	0.000	0.000
	SEIS	0.000	0.000	0.000	0.000	0.000	0.000
	GR+T1	-0.030	0.000	-0.020	0.000	-0.049	0.000
	GR+T1+SEIS	0.030	0.000	0.020	0.000	0.049	0.000

D I S P L A C E M E N T S

Point name	Load combination	TRANSLATIONS (in) X	Y	Z	ROTATIONS (deg) X	Y	Z
A09	GR	0.000	0.000	0.000	0.000	0.000	0.000
	T1	-0.027	0.000	-0.025	0.000	-0.048	0.000
	E1	0.000	0.000	0.000	0.000	0.000	0.000
	E2	0.000	0.000	0.000	0.000	0.000	0.000
	SEIS	0.000	0.000	0.000	0.000	0.000	0.000
	GR+T1	-0.027	0.000	-0.025	0.000	-0.048	0.000
	GR+T1+SEIS	0.027	0.000	0.025	0.000	0.048	0.000
A10	GR	0.000	0.000	0.000	0.000	0.000	0.000
	T1	-0.001	0.000	-0.073	0.000	-0.011	0.000
	E1	0.000	0.000	0.000	0.000	0.000	0.000
	E2	0.000	0.000	0.000	0.000	0.000	0.000
	SEIS	0.000	0.000	0.000	0.000	0.000	0.000
	GR+T1	-0.001	0.000	-0.073	0.000	-0.011	0.000
	GR+T1+SEIS	0.001	0.000	0.073	0.000	0.011	0.000
A11	GR	0.000	0.000	0.000	0.000	0.000	0.000
	T1	0.000	0.000	-0.080	0.000	0.000	0.000
	E1	0.000	0.000	0.000	0.000	0.000	0.000
	E2	0.000	0.000	0.000	0.000	0.000	0.000
	SEIS	0.000	0.000	0.000	0.000	0.000	0.000
	GR+T1	0.000	0.000	-0.080	0.000	0.000	0.000
	GR+T1+SEIS	0.000	0.000	0.080	0.000	0.000	0.000
A12	GR	0.000	0.000	0.000	0.000	0.000	0.000
	T1	0.000	0.000	0.000	0.000	0.000	0.000
	E1	0.000	0.000	0.000	0.000	0.000	0.000
	E2	0.000	0.000	0.000	0.000	0.000	0.000
	SEIS	0.000	0.000	0.000	0.000	0.000	0.000
	GR+T1	0.000	0.000	0.000	0.000	0.000	0.000
	GR+T1+SEIS	0.000	0.000	0.000	0.000	0.000	0.000

*** Segment A end ***

*** Segment B begin ***

A02	GR	0.000	0.000	0.000	0.000	0.000	0.000
	T1	0.021	0.000	0.014	0.001	0.101	0.000
	E1	0.000	0.000	0.000	0.000	0.000	0.000
	E2	0.000	0.000	0.000	0.000	0.000	0.000
	SEIS	0.000	0.000	0.000	0.000	0.000	0.000
	GR+T1	0.021	0.000	0.014	0.001	0.101	0.000
	GR+T1+SEIS	0.021	0.000	0.014	0.001	0.101	0.000

D I S P L A C E M E N T S

Point name	Load combination	TRANSLATIONS (in) X	Y	Z	ROTATIONS (deg) X	Y	Z
B01 N	GR	0.000	0.000	0.000	0.000	0.000	0.000
	T1	0.021	0.004	0.014	0.001	0.101	0.000
	E1	0.000	0.000	0.000	0.000	0.000	0.000
	E2	0.000	0.000	0.000	0.000	0.000	0.000
	SEIS	0.000	0.000	0.000	0.000	0.000	0.000
	GR+T1	0.021	0.003	0.014	0.001	0.101	0.000
	GR+T1+SEIS	0.021	0.003	0.014	0.001	0.101	0.000
B01 F	GR	0.000	0.000	0.000	0.000	0.000	0.000
	T1	0.042	0.017	0.029	0.006	0.101	0.000
	E1	0.000	0.000	0.000	0.000	0.000	0.000
	E2	0.000	0.000	0.000	0.000	0.000	0.000
	SEIS	0.000	0.000	0.000	0.000	0.000	0.000
	GR+T1	0.042	0.017	0.029	0.006	0.101	0.000
	GR+T1+SEIS	0.042	0.017	0.029	0.006	0.102	0.001
B02	GR	0.000	0.000	0.000	0.000	0.000	0.000
	T1	0.059	0.016	0.041	0.006	0.101	0.000
	E1	0.000	0.000	0.000	0.000	0.000	0.000
	E2	0.000	0.000	0.000	0.000	0.000	0.000
	SEIS	0.000	0.000	0.000	0.000	0.000	0.000
	GR+T1	0.059	0.016	0.041	0.006	0.101	0.000
	GR+T1+SEIS	0.060	0.016	0.041	0.006	0.102	0.001
B03	GR	0.000	0.000	0.000	0.000	0.000	0.000
	T1	0.063	0.016	0.043	0.006	0.101	0.000
	E1	0.000	0.000	0.000	0.000	0.000	0.000
	E2	0.000	0.000	0.000	0.000	0.000	0.000
	SEIS	0.000	0.000	0.000	0.000	0.000	0.000
	GR+T1	0.063	0.016	0.043	0.006	0.101	0.000
	GR+T1+SEIS	0.063	0.016	0.043	0.006	0.102	0.001

*** Segment B end ***

SUPPORT FORCES

Point/ Supp. ID	Connect/ Type	Load Combination	LOCAL Dirn	LOCAL Force	LOCAL Deform	GLOBAL Dirn	GLOBAL Force	GLOBAL Deform
A10		GR	down	159	0.000	X		0.000
A10 1	Y - Stop		-Z		0.000	Y	-159	0.000
Stiff	:RIGID		-X		0.000	Z		0.000
		T1	up	0	0.000	X	0	-0.001
			-Z	25	0.073	Y	0	0.000
			-X	0	0.001	Z	-25	-0.073
		E1	down	0	0.000	X		0.000
			-Z		0.000	Y	0	0.000
			+X		0.000	Z		0.000
		E2	down	0	0.000	X		0.000
			+Z		0.000	Y	0	0.000
			-X		0.000	Z		0.000
		SEIS	down	0	0.000	X		0.000
			-Z		0.000	Y	0	0.000
			-X		0.000	Z		0.000
		GR+T1	down	159	0.000	X	0	-0.001
			-Z	25	0.073	Y	-159	0.000
			-X	0	0.001	Z	-25	-0.073
		GR+T1+SEIS	down	159	0.000	X	0	0.001
			-Z	25	0.073	Y	159	0.000
			-X	0	0.001	Z	25	0.073
B02		GR	down	83	0.000	X		0.000
B02 1	Y - Stop		+Z		0.000	Y	-83	0.000
Stiff	:RIGID		+X		0.000	Z		0.000
		T1	up	83	0.016	X		0.059
			+Z		0.041	Y	83	0.016
			+X		0.059	Z		0.041
		E1	down	0	0.000	X		0.000
			+Z		0.000	Y	0	0.000
			+X		0.000	Z		0.000
		E2	down	4	0.000	X		0.000
			+Z		0.000	Y	-4	0.000
			-X		0.000	Z		0.000
		SEIS	down	4	0.000	X		0.000
			-Z		0.000	Y	4	0.000
			-X		0.000	Z		0.000

W320H32C.OUT 2-22-95 2:49p

SUPPORT FORCES

Point/ Supp. ID	Connect/ Type	Load Combination	LOCAL Dirn	LOCAL Force	LOCAL Deform	GLOBAL Dirn	GLOBAL Force	GLOBAL Deform
		GR+T1	up		0.016	X		0.059
			+Z		0.041	Y		0.016
			+X		0.059	Z		0.041
		GR+T1+SEIS	down	4	0.016	X		0.060
			-Z		0.041	Y	4	0.016
			-X		0.060	Z		0.041

R E S T R A I N T R E A C T I O N S

Point name	Load combination	FORCES (lb) X	Y	Z	Result	MOMENTS (ft-lb) X	Y	Z	Result
A00	Anchor								
	GR	0	-131	0	131	92	0	-10	92
	T1	18473	-28	-32478	37364	109	27418	-22	27418
	E1	12	-2	8	14	3	11	-12	17
	E2	-1	5	32	33	2	-1	-1	2
	SEIS	13	8	40	43	4	13	12	18
	GR+T1	18473	-159	-32478	37364	201	27418	-32	27419
	GR+T1+SEIS	18486	167	32518	37406	205	27431	45	27432
A05	Anchor								
	GR	0	-227	0	227	-4	0	-252	252
	T1	408363	-56	32487	409653	-15	-64446	-125	64446
	E1	41	2	-8	42	3	12	2	13
	E2	1	-2	21	21	0	-16	-4	16
	SEIS	42	4	29	51	3	28	6	29
	GR+T1	408363	-282	32487	409653	-19	-64446	-377	64447
	GR+T1+SEIS	408405	287	32515	409698	22	64474	383	64475
A06	Anchor								
	GR	0	-261	0	261	-24	0	333	334
	T1	-425388	0	100	425388	0	-1469	0	1469
	E1	32	0	0	32	0	-3	0	3
	E2	4	0	51	51	0	83	0	83
	SEIS	36	0	51	63	0	86	0	86
	GR+T1	-425388	-261	100	425388	-24	-1469	332	1506
	GR+T1+SEIS	425424	261	151	425424	24	1555	332	1591
A10	Y - Stop								
	GR	0	-159	0	159	0	0	0	0
	T1	0	0	-25	25	0	0	0	0
	E1	0	0	0	0	0	0	0	0
	E2	0	0	0	0	0	0	0	0
	SEIS	0	0	0	0	0	0	0	0
	GR+T1	0	-159	-25	161	0	0	0	0
	GR+T1+SEIS	0	159	25	161	0	0	0	0
A12	Anchor								
	GR	0	-64	0	64	67	0	21	70
	T1	-1447	0	-83	1450	0	-6647	0	6647
	E1	26	0	0	26	0	22	0	22
	E2	-4	0	7	8	0	-10	0	10
	SEIS	30	0	7	31	0	32	0	32
	GR+T1	-1447	-64	-83	1451	67	-6647	21	6648
	GR+T1+SEIS	1477	64	90	1481	67	6680	21	6680

R E S T R A I N T R E A C T I O N S

Point name	Load combination	FORCES (lb) X	Y	Z	Result	MOMENTS (ft-lb) X	Y	Z	Result
B02	Y - Stop								
	GR	0	-83	0	83	0	0	0	0
	T1	0	83	0	83	0	0	0	0
	E1	0	0	0	0	0	0	0	0
	E2	0	-4	0	4	0	0	0	0
	SEIS	0	4	0	4	0	0	0	0
	GR+T1	0	0	0	0	0	0	0	0
	GR+T1+SEIS	0	4	0	4	0	0	0	0

G L O B A L F O R C E S & M O M E N T S

Point name	Load combination	FORCES (lb) X	Y	Z	Result	MOMENTS (ft-lb) X	Y	Z	Result
*** Segment A begin ***									
A00	GR	0	107	0	107	-92	0	10	92
	T1	-18473	28	32478	37364	-109	-27418	22	27418
	E1	-9	2	-8	12	-3	-11	12	17
	E2	1	-5	-29	30	-2	1	1	2
	SEIS	10	8	37	39	4	13	12	18
	GR+T1	-18473	135	32478	37364	-201	-27418	32	27419
	GR+T1+SEIS	18483	143	32515	37402	205	27431	45	27432
A01	GR	0	94	0	94	-41	0	10	43
	T1	-18473	28	32478	37364	-95	-18182	22	18182
	E1	-7	2	-8	11	-2	-7	12	14
	E2	1	-5	-28	28	-4	1	1	4
	SEIS	9	8	36	37	6	8	12	16
	GR+T1	-18473	121	32478	37364	-137	-18182	32	18183
	GR+T1+SEIS	18481	129	32514	37399	143	18190	45	18191
A02 -	GR	0	74	0	74	7	0	10	12
	T1	-18473	28	32478	37364	-79	-7406	22	7407
	E1	-5	2	-8	10	0	-4	12	12
	E2	1	-5	-25	26	-7	0	1	7
	SEIS	6	8	33	35	8	4	12	15
	GR+T1	-18473	102	32478	37364	-72	-7406	32	7407
	GR+T1+SEIS	18479	109	32511	37396	79	7410	45	7411
A02 +	GR	0	24	0	24	2	0	10	10
	T1	-18473	-56	32478	37364	73	-7406	22	7407
	E1	11	2	-8	14	-1	14	-5	15
	E2	1	-2	-9	10	2	0	1	2
	SEIS	12	4	17	21	3	14	5	15
	GR+T1	-18473	-31	32478	37364	75	-7406	32	7407
	GR+T1+SEIS	18485	35	32495	37385	79	7420	38	7421
A03 N	GR	0	5	0	5	10	0	10	14
	T1	-18473	-56	32478	37364	41	3369	22	3370
	E1	13	2	-8	16	1	7	-5	8
	E2	1	-2	-7	7	1	-1	1	2
	SEIS	14	4	15	21	2	8	5	10
	GR+T1	-18473	-51	32478	37364	51	3369	32	3370
	GR+T1+SEIS	18487	55	32493	37384	53	3377	38	3378

G L O B A L F O R C E S & M O M E N T S

Point name	Load combination	FORCES (lb) X	Y	Z	Result	MOMENTS (ft-lb) X	Y	Z	Result
A03 F	GR	0	-48	0	48	-4	0	-19	19
	T1	-18473	-56	32478	37364	-15	-10636	-33	10636
	E1	20	2	-8	21	3	-1	-2	4
	E2	1	-2	-1	2	0	1	-1	2
	SEIS	21	4	9	23	3	2	3	5
	GR+T1	-18473	-103	32478	37364	-18	-10636	-52	10636
	GR+T1+SEIS	18493	107	32487	37382	22	10638	55	10638
A04 -	GR	0	-59	0	59	-4	0	-36	37
	T1	-18473	-56	32478	37364	-15	-21462	-52	21462
	E1	21	2	-8	22	3	2	-1	4
	E2	1	-2	1	2	0	1	-2	2
	SEIS	22	4	8	24	3	3	3	5
	GR+T1	-18473	-114	32478	37364	-18	-21462	-88	21463
	GR+T1+SEIS	18495	118	32487	37382	22	21465	91	21466
A04 +	GR	0	-137	0	137	-4	0	-36	37
	T1	-18473	-56	32478	37364	-15	-21462	-52	21462
	E1	30	2	-8	31	3	2	-1	4
	E2	1	-2	10	10	0	1	-2	2
	SEIS	31	4	18	36	3	3	3	5
	GR+T1	-18473	-192	32478	37364	-18	-21462	-88	21463
	GR+T1+SEIS	18504	196	32496	37395	22	21465	91	21466
A05 -	GR	0	-198	0	198	-4	0	-259	259
	T1	-18473	-56	32478	37364	-15	-64658	-126	64658
	E1	38	2	-8	38	3	12	2	13
	E2	1	-2	17	17	0	-17	-4	17
	SEIS	39	4	25	46	3	29	6	30
	GR+T1	-18473	-253	32478	37365	-18	-64658	-384	64659
	GR+T1+SEIS	18511	257	32503	37406	22	64687	390	64689
A05 +	GR	0	29	0	29	0	0	-7	7
	T1	-426836	0	-8	426836	0	-213	0	213
	E1	-3	0	0	3	0	0	0	0
	E2	0	0	-3	3	0	-1	0	1
	SEIS	3	0	3	5	0	1	0	1
	GR+T1	-426836	29	-8	426836	0	-213	-7	213
	GR+T1+SEIS	426839	29	12	426839	0	214	7	214
A06 -	GR	0	-29	0	29	0	0	-7	7
	T1	-426836	0	-8	426836	0	-204	0	204
	E1	4	0	0	4	0	0	0	0
	E2	0	0	4	4	0	-1	0	1
	SEIS	4	0	4	5	0	1	0	1
	GR+T1	-426836	-29	-8	426836	0	-204	-7	204
	GR+T1+SEIS	426839	29	12	426839	0	205	7	205

G L O B A L F O R C E S & M O M E N T S

Point name	Load combination	FORCES (lb) X	Y	Z	Result	MOMENTS (ft-lb) X	Y	Z	Result
A06 +	GR	0	232	0	232	24	0	-339	340
	T1	-1447	0	-109	1452	0	1265	0	1265
	E1	-29	0	0	29	0	3	0	3
	E2	-4	0	-48	48	0	-84	0	84
	SEIS	33	0	48	58	0	87	0	87
	GR+T1	-1447	232	-109	1470	24	1265	-339	1310
	GR+T1+SEIS	1480	232	156	1507	24	1352	339	1394
A07 -	GR	0	171	0	171	24	0	-71	75
	T1	-1447	0	-109	1452	0	1410	0	1410
	E1	-22	0	0	22	0	3	0	3
	E2	-4	0	-40	41	0	-25	0	25
	SEIS	26	0	40	48	0	28	0	28
	GR+T1	-1447	171	-109	1462	24	1410	-71	1412
	GR+T1+SEIS	1473	171	149	1490	24	1438	71	1440
A07 +	GR	0	93	0	93	24	0	-71	75
	T1	-1447	0	-109	1452	0	1410	0	1410
	E1	-12	0	0	12	0	3	0	3
	E2	-4	0	-31	31	0	-25	0	25
	SEIS	16	0	31	35	0	28	0	28
	GR+T1	-1447	93	-109	1455	24	1410	-71	1412
	GR+T1+SEIS	1464	93	140	1473	24	1438	71	1440
A08 N	GR	0	82	0	82	24	0	-42	48
	T1	-1447	0	-109	1452	0	1446	0	1446
	E1	-11	0	0	11	0	3	0	3
	E2	-4	0	-30	30	0	-15	0	15
	SEIS	15	0	30	33	0	18	0	18
	GR+T1	-1447	82	-109	1454	24	1446	-42	1447
	GR+T1+SEIS	1462	82	138	1471	24	1464	42	1465
A08 F	GR	0	29	0	29	-24	0	21	32
	T1	-1447	0	-109	1452	0	107	0	107
	E1	-5	0	0	5	0	-4	0	4
	E2	-4	0	-23	24	0	8	0	8
	SEIS	9	0	23	25	0	12	0	12
	GR+T1	-1447	29	-109	1452	-24	107	21	112
	GR+T1+SEIS	1456	29	132	1462	24	119	21	123
A09	GR	0	19	0	19	-32	0	21	38
	T1	-1447	0	-109	1452	0	-360	0	360
	E1	-3	0	0	3	0	-5	0	5
	E2	-4	0	-22	22	0	7	0	7
	SEIS	7	0	22	23	0	12	0	12
	GR+T1	-1447	19	-109	1452	-32	-360	21	362
	GR+T1+SEIS	1455	19	131	1461	32	372	21	374

G L O B A L F O R C E S & M O M E N T S

Point name	Load combination	FORCES (lb) X	Y	Z	Result	MOMENTS (ft-lb) X	Y	Z	Result
A10 -	GR	0	-93	0	93	92	0	21	94
	T1	-1447	0	-109	1452	0	-5200	0	5200
	E1	10	0	0	10	0	7	0	7
	E2	-4	0	-9	10	0	-6	0	6
	SEIS	14	0	9	17	0	13	0	13
	GR+T1	-1447	-93	-109	1455	92	-5200	21	5201
	GR+T1+SEIS	1462	93	117	1469	92	5213	21	5214
A10 +	GR	0	66	0	66	92	0	21	94
	T1	-1447	0	-83	1450	0	-5200	0	5200
	E1	10	0	0	10	0	7	0	7
	E2	-4	0	-9	10	0	-6	0	6
	SEIS	14	0	9	17	0	13	0	13
	GR+T1	-1447	66	-83	1451	92	-5200	21	5201
	GR+T1+SEIS	1461	66	92	1466	92	5213	21	5214
A11 -	GR	0	49	0	49	63	0	21	66
	T1	-1447	0	-83	1450	0	-5924	0	5924
	E1	12	0	0	12	0	12	0	12
	E2	-4	0	-7	8	0	-8	0	8
	SEIS	16	0	7	18	0	21	0	21
	GR+T1	-1447	49	-83	1450	63	-5924	21	5924
	GR+T1+SEIS	1463	49	90	1467	63	5945	21	5945
A11 +	GR	0	-25	0	25	63	0	21	66
	T1	-1447	0	-83	1450	0	-5924	0	5924
	E1	21	0	0	21	0	12	0	12
	E2	-4	0	2	5	0	-8	0	8
	SEIS	25	0	2	25	0	21	0	21
	GR+T1	-1447	-25	-83	1450	63	-5924	21	5924
	GR+T1+SEIS	1472	25	85	1475	63	5945	21	5945
A12	GR	0	-25	0	25	67	0	21	70
	T1	-1447	0	-83	1450	0	-6647	0	6647
	E1	21	0	0	21	0	22	0	22
	E2	-4	0	2	5	0	-10	0	10
	SEIS	25	0	2	25	0	32	0	32
	GR+T1	-1447	-25	-83	1450	67	-6647	21	6648
	GR+T1+SEIS	1472	25	85	1475	67	6680	21	6680

*** Segment A end ***

*** Segment B begin ***

G L O B A L F O R C E S & M O M E N T S

Point name	Load combination	FORCES (lb) X	Y	Z	Result	MOMENTS (ft-lb) X	Y	Z	Result
A02	GR	0	50	0	50	6	0	0	6
	T1	0	83	0	83	-153	0	0	153
	E1	-16	0	0	16	0	-18	17	24
	E2	0	-4	-16	16	-10	0	0	10
	SEIS	16	4	16	23	10	18	17	26
	GR+T1	0	133	0	133	-147	0	0	147
	GR+T1+SEIS	16	137	16	139	157	18	17	159
B01 N	GR	0	41	0	41	6	0	0	6
	T1	0	83	0	83	-153	0	0	153
	E1	-15	0	0	15	0	-18	13	22
	E2	0	-4	-15	15	-6	0	0	6
	SEIS	15	4	15	22	6	18	13	23
	GR+T1	0	125	0	125	-147	0	0	147
	GR+T1+SEIS	15	129	15	130	153	18	13	155
B01 F	GR	0	-11	0	11	14	0	0	14
	T1	0	83	0	83	-69	0	0	69
	E1	-9	0	0	9	0	-7	0	7
	E2	0	-4	-9	9	3	0	0	3
	SEIS	9	4	9	13	3	7	0	7
	GR+T1	0	72	0	72	-56	0	0	56
	GR+T1+SEIS	9	76	9	77	59	7	0	59
B02 -	GR	0	-39	0	39	-7	0	0	7
	T1	0	83	0	83	0	0	0	0
	E1	-5	0	0	5	0	-1	0	1
	E2	0	-4	-5	7	0	0	0	0
	SEIS	5	4	5	9	0	1	0	1
	GR+T1	0	45	0	45	-7	0	0	7
	GR+T1+SEIS	5	49	5	49	7	1	0	7
B02 +	GR	0	45	0	45	-7	0	0	7
	T1	0	0	0	0	0	0	0	0
	E1	-5	0	0	5	0	-1	0	1
	E2	0	0	-5	5	0	0	0	0
	SEIS	5	0	5	8	0	1	0	1
	GR+T1	0	45	0	45	-7	0	0	7
	GR+T1+SEIS	5	45	5	45	7	1	0	7
B03	GR	0	39	0	39	0	0	0	0
	T1	0	0	0	0	0	0	0	0
	E1	-5	0	0	5	0	0	0	0
	E2	0	0	-5	5	0	0	0	0
	SEIS	5	0	5	7	0	0	0	0
	GR+T1	0	39	0	39	0	0	0	0
	GR+T1+SEIS	5	39	5	40	0	0	0	0

*** Segment B end ***

ASME B31.3c (1992) CODE COMPLIANCE

Point name	Load combination	In-Pl. Moment (Moments in ft-lb)	Out-Pl. Moment	Torsion Moment	S.I.F In	S.I.F Out	Eq. no.	Load type	Code Stress (Stress in psi)	Code Allow.
*** Segment A begin ***										
A00	Max P						(3a)	HOOP	0	16700
	GR + Max P	92	0		1.00	1.00	(18)	SUST	138	16700
	Cold to T1	109	27418	22	1.00	1.00	(17)	DISP	38728	25050**
	with Sus. load margin						(17)		38728	41612
	Sus. + E1	94	11		1.00	1.00	(18)	OCC	156	22211
	Sus. + E2	93	1		1.00	1.00	(18)	OCC	141	22211
	SEIS	4	13		1.00	1.00	(18)	OCC	20	22211
	SUS+SEIS	96	13		1.00	1.00	(18)	OCC	158	22211
A01	Max P						(3a)	HOOP	0	16700
	GR + Max P	41	0		1.00	1.00	(18)	SUST	31	16700
	Cold to T1	95	18182	22	1.00	1.00	(17)	DISP	12980	25050
	Sus. + E1	43	7		1.00	1.00	(18)	OCC	37	22211
	Sus. + E2	46	1		1.00	1.00	(18)	OCC	35	22211
	SEIS	6	8		1.00	1.00	(18)	OCC	7	22211
	SUS+SEIS	47	8		1.00	1.00	(18)	OCC	39	22211
A02 -	Max P						(3a)	HOOP	0	16700
	GR + Max P	7	0		1.63	1.84	(18)	SUST	9	16700
	Cold to T1	79	7406	22	1.63	1.84	(17)	DISP	9745	25050
	Sus. + E1	8	4		1.63	1.84	(18)	OCC	14	22211
	Sus. + E2	15	0		1.63	1.84	(18)	OCC	18	22211
	SEIS	8	4		1.63	1.84	(18)	OCC	11	22211
	SUS+SEIS	15	4		1.63	1.84	(18)	OCC	20	22211
A02 +	Max P						(3a)	HOOP	0	16700
	GR + Max P	2	0		1.63	1.84	(18)	SUST	2	16700
	Cold to T1	73	7406	22	1.63	1.84	(17)	DISP	9745	25050
	Sus. + E1	3	14		1.63	1.84	(18)	OCC	22	22211
	Sus. + E2	4	0		1.63	1.84	(18)	OCC	5	22211
	SEIS	3	14		1.63	1.84	(18)	OCC	20	22211
	SUS+SEIS	5	14		1.63	1.84	(18)	OCC	22	22211
A03 N-	Max P						(3a)	HOOP	0	16700
	GR + Max P	10	0		1.00	1.00	(18)	SUST	8	16700
	Cold to T1	41	3369	22	1.00	1.00	(17)	DISP	2406	25050
	Sus. + E1	11	7		1.00	1.00	(18)	OCC	13	22211
	Sus. + E2	12	1		1.00	1.00	(18)	OCC	9	22211
	SEIS	2	8		1.00	1.00	(18)	OCC	6	22211
	SUS+SEIS	12	8		1.00	1.00	(18)	OCC	14	22211

ASME B31.3c (1992) CODE COMPLIANCE

Point name	Load combination	(Moments in ft-lb) In-Pl. Moment	Out-Pl. Moment	Torsion Moment	S.I.F In	S.I.F Out	Eq. no.	(Stress in psi) Load type	Code Stress	Code Allow.
A03 N+	Max P						(3a)	HOOP	0	16700
	GR + Max P	0	10		2.44	2.03	(18)	SUST	16	16700
	Cold to T1	3369	41	22	2.44	2.03	(17)	DISP	5866	25050
	Sus. + E1	7	11		2.44	2.03	(18)	OCC	29	22211
	Sus. + E2	1	12		2.44	2.03	(18)	OCC	18	22211
	SEIS	8	2		2.44	2.03	(18)	OCC	14	22211
	SUS+SEIS	8	12		2.44	2.03	(18)	OCC	30	22211
A03 F-	Max P						(3a)	HOOP	0	16700
	GR + Max P	0	19		2.44	2.03	(18)	SUST	29	16700
	Cold to T1	10636	33	15	2.44	2.03	(17)	DISP	18518	25050
	Sus. + E1	1	21		2.44	2.03	(18)	OCC	32	22211
	Sus. + E2	1	20		2.44	2.03	(18)	OCC	31	22211
	SEIS	2	3		2.44	2.03	(18)	OCC	6	22211
	SUS+SEIS	2	22		2.44	2.03	(18)	OCC	35	22211
A03 F+	Max P						(3a)	HOOP	0	16700
	GR + Max P	19	0		1.00	1.00	(18)	SUST	14	16700
	Cold to T1	33	10636	15	1.00	1.00	(17)	DISP	7593	25050
	Sus. + E1	21	1		1.00	1.00	(18)	OCC	16	22211
	Sus. + E2	20	1		1.00	1.00	(18)	OCC	15	22211
	SEIS	3	2		1.00	1.00	(18)	OCC	3	22211
	SUS+SEIS	22	2		1.00	1.00	(18)	OCC	17	22211
A04	Max P						(3a)	HOOP	0	16700
	GR + Max P	36	0		1.00	1.00	(18)	SUST	27	16700
	Cold to T1	52	21462	15	1.00	1.00	(17)	DISP	15322	25050
	Sus. + E1	38	2		1.00	1.00	(18)	OCC	29	22211
	Sus. + E2	38	1		1.00	1.00	(18)	OCC	29	22211
	SEIS	3	3		1.00	1.00	(18)	OCC	3	22211
	SUS+SEIS	39	3		1.00	1.00	(18)	OCC	31	22211
A05 -	Max P						(3a)	HOOP	0	16700
	GR + Max P	259	0		1.00	1.00	(18)	SUST	39	16700
	Cold to T1	126	64658	15	1.00	1.00	(17)	DISP	8305	25050
	Sus. + E1	261	12		1.00	1.00	(18)	OCC	41	22211
	Sus. + E2	262	17		1.00	1.00	(18)	OCC	42	22211
	SEIS	6	29		1.00	1.00	(18)	OCC	4	22211
	SUS+SEIS	264	29		1.00	1.00	(18)	OCC	43	22211
A05 +	Max P						(3a)	HOOP	0	16700
	GR + Max P	7	0		1.00	1.00	(18)	SUST	1	16700
	Cold to T1	0	213	0	1.00	1.00	(17)	DISP	27	25050
	Sus. + E1	7	0		1.00	1.00	(18)	OCC	1	22211
	Sus. + E2	7	1		1.00	1.00	(18)	OCC	1	22211
	SEIS	0	1		1.00	1.00	(18)	OCC	0	22211
	SUS+SEIS	7	1		1.00	1.00	(18)	OCC	1	22211

ASME B31.3c (1992) CODE COMPLIANCE

Point name	Load combination	(Moments in ft-lb) In-Pl. Moment	Out-Pl. Moment	Torsion Moment	S.I.F In	S.I.F Out	Eq. no.	(Stress in psi) Load type	Code Stress	Code Allow.
A06 -	Max P						(3a)	HOOP	0	16700
	GR + Max P	7	0		1.00	1.00	(18)	SUST	1	16700
	Cold to T1	0	204	0	1.00	1.00	(17)	DISP	26	25050
	Sus. + E1	7	0		1.00	1.00	(18)	OCC	1	22211
	Sus. + E2	7	1		1.00	1.00	(18)	OCC	1	22211
	SEIS	0	1		1.00	1.00	(18)	OCC	0	22211
	SUS+SEIS	7	1		1.00	1.00	(18)	OCC	1	22211
A06 +	Max P						(3a)	HOOP	0	16700
	GR + Max P	339	0		1.00	1.00	(18)	SUST	51	16700
	Cold to T1	0	1265	0	1.00	1.00	(17)	DISP	162	25050
	Sus. + E1	339	3		1.00	1.00	(18)	OCC	52	22211
	Sus. + E2	339	84		1.00	1.00	(18)	OCC	64	22211
	SEIS	0	87		1.00	1.00	(18)	OCC	13	22211
	SUS+SEIS	339	87		1.00	1.00	(18)	OCC	64	22211
A07	Max P						(3a)	HOOP	0	16700
	GR + Max P	71	0		1.00	1.00	(18)	SUST	54	16700
	Cold to T1	0	1410	0	1.00	1.00	(17)	DISP	1007	25050
	Sus. + E1	71	3		1.00	1.00	(18)	OCC	56	22211
	Sus. + E2	71	25		1.00	1.00	(18)	OCC	73	22211
	SEIS	0	28		1.00	1.00	(18)	OCC	21	22211
	SUS+SEIS	71	28		1.00	1.00	(18)	OCC	75	22211
A08 N-	Max P						(3a)	HOOP	0	16700
	GR + Max P	42	0		1.00	1.00	(18)	SUST	32	16700
	Cold to T1	0	1446	0	1.00	1.00	(17)	DISP	1032	25050
	Sus. + E1	42	3		1.00	1.00	(18)	OCC	34	22211
	Sus. + E2	42	15		1.00	1.00	(18)	OCC	43	22211
	SEIS	0	18		1.00	1.00	(18)	OCC	14	22211
	SUS+SEIS	42	18		1.00	1.00	(18)	OCC	45	22211
A08 N+	Max P						(3a)	HOOP	0	16700
	GR + Max P	0	42		2.44	2.03	(18)	SUST	64	16700
	Cold to T1	1446	0	0	2.44	2.03	(17)	DISP	2518	25050
	Sus. + E1	3	42		2.44	2.03	(18)	OCC	70	22211
	Sus. + E2	15	42		2.44	2.03	(18)	OCC	92	22211
	SEIS	18	0		2.44	2.03	(18)	OCC	34	22211
	SUS+SEIS	18	42		2.44	2.03	(18)	OCC	98	22211
A08 F-	Max P						(3a)	HOOP	0	16700
	GR + Max P	0	24		2.44	2.03	(18)	SUST	38	16700
	Cold to T1	107	0	0	2.44	2.03	(17)	DISP	187	25050
	Sus. + E1	4	24		2.44	2.03	(18)	OCC	44	22211
	Sus. + E2	8	24		2.44	2.03	(18)	OCC	53	22211
	SEIS	12	0		2.44	2.03	(18)	OCC	22	22211
	SUS+SEIS	12	24		2.44	2.03	(18)	OCC	60	22211

ASME B31.3c (1992) CODE COMPLIANCE

Point name	Load combination	In-Pl. Moment (Moments in ft-lb)	Out-Pl. Moment	Torsion Moment	S.I.F In	S.I.F Out	Eq. no.	Load type	Code Stress (Stress in psi)	Code Allow.
A08 F+	Max P						(3a)	HOOP	0	16700
	GR + Max P	24	0		1.00	1.00	(18)	SUST	18	16700
	Cold to T1	0	107	0	1.00	1.00	(17)	DISP	77	25050
	Sus. + E1	24	4		1.00	1.00	(18)	OCC	21	22211
	Sus. + E2	24	8		1.00	1.00	(18)	OCC	25	22211
	SEIS	0	12		1.00	1.00	(18)	OCC	9	22211
	SUS+SEIS	24	12		1.00	1.00	(18)	OCC	27	22211
A09	Max P						(3a)	HOOP	0	16700
	GR + Max P	32	0		1.00	1.00	(18)	SUST	24	16700
	Cold to T1	0	360	0	1.00	1.00	(17)	DISP	257	25050
	Sus. + E1	32	5		1.00	1.00	(18)	OCC	28	22211
	Sus. + E2	32	7		1.00	1.00	(18)	OCC	30	22211
	SEIS	0	12		1.00	1.00	(18)	OCC	9	22211
	SUS+SEIS	32	12		1.00	1.00	(18)	OCC	33	22211
A10	Max P						(3a)	HOOP	0	16700
	GR + Max P	92	0		1.00	1.00	(18)	SUST	70	16700
	Cold to T1	0	5200	0	1.00	1.00	(17)	DISP	3712	25050
	Sus. + E1	92	7		1.00	1.00	(18)	OCC	75	22211
	Sus. + E2	92	6		1.00	1.00	(18)	OCC	74	22211
	SEIS	0	13		1.00	1.00	(18)	OCC	10	22211
	SUS+SEIS	92	13		1.00	1.00	(18)	OCC	79	22211
A11	Max P						(3a)	HOOP	0	16700
	GR + Max P	63	0		1.00	1.00	(18)	SUST	48	16700
	Cold to T1	0	5924	0	1.00	1.00	(17)	DISP	4229	25050
	Sus. + E1	63	12		1.00	1.00	(18)	OCC	57	22211
	Sus. + E2	63	8		1.00	1.00	(18)	OCC	54	22211
	SEIS	0	21		1.00	1.00	(18)	OCC	16	22211
	SUS+SEIS	63	21		1.00	1.00	(18)	OCC	63	22211

*** Segment A end ***

*** Segment B begin ***

Point name	Load combination	In-Pl. Moment	Out-Pl. Moment	Torsion Moment	S.I.F In	S.I.F Out	Eq. no.	Load type	Code Stress	Code Allow.
A02	Max P						(3a)	HOOP	0	16700
	GR + Max P	6	0		1.63	1.84	(18)	SUST	7	16700
	Cold to T1	153	0	0	1.63	1.84	(17)	DISP	172	25050
	Sus. + E1	6	17		1.63	1.84	(18)	OCC	29	22211
	Sus. + E2	15	0		1.63	1.84	(18)	OCC	18	22211
	SEIS	10	17		1.63	1.84	(18)	OCC	25	22211
	SUS+SEIS	16	17		1.63	1.84	(18)	OCC	32	22211

ASME B31.3c (1992) CODE COMPLIANCE

Point name	Load combination	In-Pl. Moment (Moments in ft-lb)	Out-Pl. Moment	Torsion Moment	S.I.F In	S.I.F Out	Eq. no.	Load type	Code Stress (Stress in psi)	Code Allow.
B01 N-	Max P						(3a)	HOOP	0	16700
	GR + Max P	6	0		1.00	1.00	(18)	SUST	4	16700
	Cold to T1	153	0	0	1.00	1.00	(17)	DISP	109	25050
	Sus. + E1	6	13		1.00	1.00	(18)	OCC	14	22211
	Sus. + E2	11	0		1.00	1.00	(18)	OCC	9	22211
	SEIS	6	13		1.00	1.00	(18)	OCC	11	22211
	SUS+SEIS	12	13		1.00	1.00	(18)	OCC	15	22211
B01 N+	Max P						(3a)	HOOP	0	16700
	GR + Max P	6	0		2.44	2.03	(18)	SUST	10	16700
	Cold to T1	153	0	0	2.44	2.03	(17)	DISP	266	25050
	Sus. + E1	6	13		2.44	2.03	(18)	OCC	30	22211
	Sus. + E2	11	0		2.44	2.03	(18)	OCC	21	22211
	SEIS	6	13		2.44	2.03	(18)	OCC	23	22211
	SUS+SEIS	12	13		2.44	2.03	(18)	OCC	33	22211
B01 F-	Max P						(3a)	HOOP	0	16700
	GR + Max P	14	0		2.44	2.03	(18)	SUST	25	16700
	Cold to T1	69	0	0	2.44	2.03	(17)	DISP	121	25050
	Sus. + E1	14	7		2.44	2.03	(18)	OCC	36	22211
	Sus. + E2	17	0		2.44	2.03	(18)	OCC	31	22211
	SEIS	3	7		2.44	2.03	(18)	OCC	12	22211
	SUS+SEIS	17	7		2.44	2.03	(18)	OCC	37	22211
B01 F+	Max P						(3a)	HOOP	0	16700
	GR + Max P	14	0		1.00	1.00	(18)	SUST	10	16700
	Cold to T1	69	0	0	1.00	1.00	(17)	DISP	50	25050
	Sus. + E1	14	7		1.00	1.00	(18)	OCC	15	22211
	Sus. + E2	17	0		1.00	1.00	(18)	OCC	13	22211
	SEIS	3	7		1.00	1.00	(18)	OCC	6	22211
	SUS+SEIS	17	7		1.00	1.00	(18)	OCC	16	22211
B02	Max P						(3a)	HOOP	0	16700
	GR + Max P	7	0		1.00	1.00	(18)	SUST	5	16700
	Cold to T1	0	0	0	1.00	1.00	(17)	DISP	0	25050
	Sus. + E1	7	1		1.00	1.00	(18)	OCC	6	22211
	Sus. + E2	7	0		1.00	1.00	(18)	OCC	5	22211
	SEIS	0	1		1.00	1.00	(18)	OCC	1	22211
	SUS+SEIS	7	1		1.00	1.00	(18)	OCC	6	22211
B03	Max P						(3a)	HOOP	0	16700
	GR + Max P	0	0		1.00	1.00	(18)	SUST	0	16700
	Cold to T1	0	0	0	1.00	1.00	(17)	DISP	0	25050
	Sus. + E1	0	0		1.00	1.00	(18)	OCC	0	22211
	Sus. + E2	0	0		1.00	1.00	(18)	OCC	0	22211
	SEIS	0	0		1.00	1.00	(18)	OCC	0	22211
	SUS+SEIS	0	0		1.00	1.00	(18)	OCC	0	22211

*** Segment B end ***

S Y S T E M S U M M A R Y

Maximum displacements (in)

Maximum X :	0.063	Point : B03	Load Comb.: GR+T1+SEIS
Maximum Y :	0.017	Point : B01 F	Load Comb.: T1
Maximum Z :	0.080	Point : A11	Load Comb.: GR+T1+SEIS
Max. total:	0.080	Point : A11	Load Comb.: GR+T1+SEIS

Maximum rotations (deg)

Maximum X :	0.006	Point : B02	Load Comb.: T1
Maximum Y :	0.106	Point : A03 N	Load Comb.: GR+T1+SEIS
Maximum Z :	0.001	Point : B01 F	Load Comb.: GR+T1+SEIS
Max. total:	0.106	Point : A03 N	Load Comb.: GR+T1+SEIS

Maximum restraint forces(lb)

Maximum X :	425424	Point : A06	Load Comb.: GR+T1+SEIS
Maximum Y :	287	Point : A05	Load Comb.: GR+T1+SEIS
Maximum Z :	32518	Point : A00	Load Comb.: GR+T1+SEIS
Max. total:	425424	Point : A06	Load Comb.: GR+T1+SEIS

Maximum restraint moments(ft-lb)

Maximum X :	205	Point : A00	Load Comb.: GR+T1+SEIS
Maximum Y :	64474	Point : A05	Load Comb.: GR+T1+SEIS
Maximum Z :	383	Point : A05	Load Comb.: GR+T1+SEIS
Max. total:	64475	Point : A05	Load Comb.: GR+T1+SEIS

S Y S T E M S U M M A R Y

Maximum pipe forces (lb)

Maximum X :	426839	Point : A06	Load Comb.: GR+T1+SEIS
Maximum Y :	257	Point : A05	Load Comb.: GR+T1+SEIS
Maximum Z :	32515	Point : A00	Load Comb.: GR+T1+SEIS
Max. total:	426839	Point : A06	Load Comb.: GR+T1+SEIS

Maximum pipe moments (ft-lb)

Maximum X :	205	Point : A00	Load Comb.: GR+T1+SEIS
Maximum Y :	64687	Point : A05	Load Comb.: GR+T1+SEIS
Maximum Z :	390	Point : A05	Load Comb.: GR+T1+SEIS
Max. total:	64689	Point : A05	Load Comb.: GR+T1+SEIS

S Y S T E M S U M M A R Y

Maximum sustained stress

```
Point            : A00
Stress    psi    : 138
Allowable psi    : 16700
Ratio            : 0.01
Load combination : GR + Max P
```

Maximum displacement stress

```
Point            : A00
Stress    psi    : 38728
Allowable psi    : 41612
Ratio            : 0.93
Load combination : Cold to T1
```

Maximum occasional stress

```
Point            : A00
Stress    psi    : 158
Allowable psi    : 22211
Ratio            : 0.01
Load combination : SUS+SEIS
```

Maximum sustained stress ratio

```
Point            : A00
Stress    psi    : 138
Allowable psi    : 16700
Ratio            : 0.01
Load combination : GR + Max P
```

Maximum displacement stress ratio

```
Point            : A00
Stress    psi    : 38728
Allowable psi    : 41612
Ratio            : 0.93
Load combination : Cold to T1
```

Maximum occasional stress ratio

```
Point            : A00
Stress    psi    : 158
Allowable psi    : 22211
Ratio            : 0.01
Load combination : SUS+SEIS
```


S Y S T E M S U M M A R Y

```
* * * The system satisfies ASME B31.3 code requirements * * *
* * * for the selected options                            * * *
```

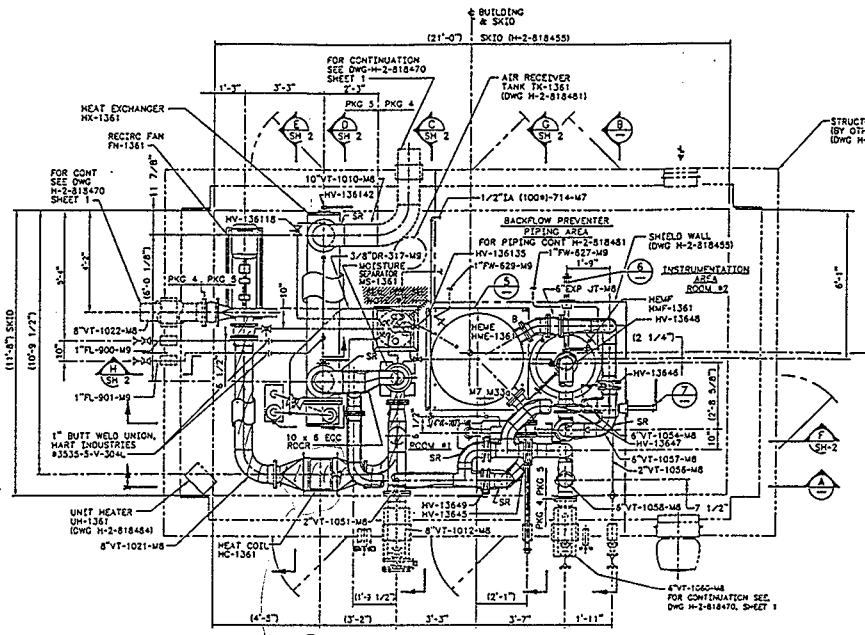

PLAN

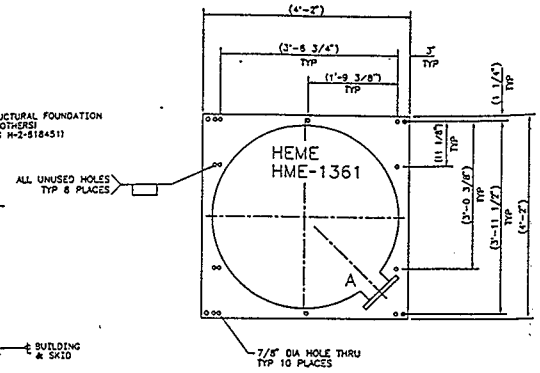

5 DETAIL
SCALE: 1"=1'-0"
(FIELD VERIFY LOCATIONS OF STUDS AND MATCH DRILL BASE PLATE)

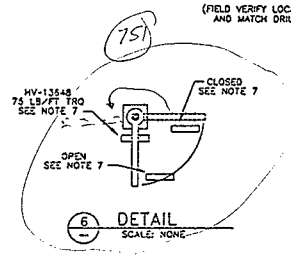

6 DETAIL
SCALE: NONE

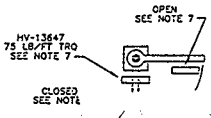

7

NOTES:

1. HEME AND HEMF SHIELDING DESIGN IS BASED ON A 1.185 CURIE SOURCE TERM DEPOSITED IN EITHER THE HEME OR THE HEMF AND YIELDS 10 MILLIREM/HOUR OUTSIDE EITHER THE HEME OR THE HEMF. SYSTEM DESIGN IS BASED ON AN AIRSTREAM PER WHC-SD-WM-SCL-033.
2. FOR MATERIALS, FABRICATION, INSPECTION & TESTING SEE CONSTRUCTION SPECIFICATION W-320-C6. HYDROSTATICALLY PRESSURE LEAK TEST THE PIPES BETWEEN THE PROCESS SKID EQUIPMENT ISOLATION VALVES, INCLUDING EQUIPMENT VENT LINE VALVES, AND THE DRAIN LINES AND DRAIN LINE COMPONENTS INSTALLED BY PACKAGE 4 (C-FARM), USING 90 PSIG.
3. ALL PIPE ELBOWS ARE LONG RADIUS, EXCEPT AS DENOTED BY SR, WHICH SHALL BE SHORT RADIUS ELLS. FOR VENT PIPE SUPPORT IDENTIFICATION AND LOCATION SEE DRAWING H-2-818480 SHEETS 5 & 6.
4. ALL EQUIPMENT, COMPONENTS & VALVES TO BE IDENTIFIED PER CONSTRUCTION SPECIFICATION W-320-C5.
5. ALL M9 PIPING SHOWN ON THIS DRAWING SHALL BE BUTT WELDED WITH BUTT WELD END VALVES & FITTINGS.
6. VALVE STEM EXTENSION FOR VALVE HV-13695 SHALL BE STORED & IDENTIFIED WITH VALVE NO. FOR LATER INSTALLATION IN PKG.4. PROVIDE A 24" LONG STEM EXTENSION (KEYSTONE SUB-ASSEMBLY NO. 121-809-020-460-241 FOR VALVE HV-13646. VALVE AND HANDLE HAVE BEEN PROVIDED BY W-320-C6, SECTION 13507.
7. INSTALL NAME PLATES ON SHIELDING WALL PER CONSTRUCTION SPEC W-320-C6.
8. SEE SHEET 4 FOR INSTRUMENT CONNECTIONS & LOCATIONS.
9. PIPE BENDS (5 X NOMINAL PIPE DIA.) MAY BE USED IN LIEU OF BUTT WELDED ELBOWS WHERE SPACE ALLOWS.
10. ALL EXPOSED CARBON STEEL SURFACES SHALL BE PAINTED IN ACCORDANCE WITH CONSTRUCTION SPECIFICATION W-320-C6.
11. TOLERANCES: FRACTIONAL ± 1/8" ANGULAR ± 1°.
12. FOR EQUIPMENT SEE THE FOLLOWING PROCUREMENT SPECIFICATIONS:
    HEMF-1361 _____ SEE W-320-P3
    HX-1361 _____ SEE W-320-P4
    HEME-1361 _____ SEE W-320-P5
    FN-1361 _____ SEE W-320-P6
    HC-1361 _____ SEE W-320-P7
    MS-1361 _____ SEE W-320-P8
13. 1/2" IA-714 & 3/8" DR-311 SHALL BE FIELD ROUTED & SUPPORTED IN APPROXIMATE LOCATIONS SHOWN.
14. OBTAIN FIELD MEASUREMENTS FOR SPOOL FABRICATION OF 3" DR-302-M9, 3" CWS-803-M4, 3" CWR-850-M4 AND ALL EQUIPMENT DRAIN LINES ENTERING SEAL POT AFTER SKID PACKAGE HAS BEEN INSTALLED. FIELD TRIM DRAIN RISERS INTO SEAL POT AS REQD TO PERMIT A MIN OF 1/4"/FT SLOPE FROM EQUIPMENT TO RISER.

¼" VT-1073-M8 FROM HEMF HMF-1361 AS SHOWN IN SECTION F. 3" DR-302-M9 AS SHOWN IN SECTION A, ON SHEET 1. THE VALVES (HY-1361 & HY-1362) SHOWN IN SECTION F, SHALL BE TYPE STAINLESS STEEL WITH 3/4" FNPT END CONNECTIONS ASCO #8210088 OR APPROVED SUBSTITUTE.

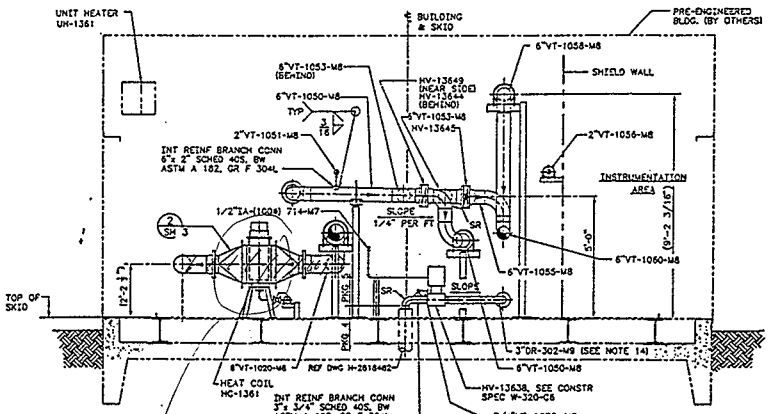

A SECTION

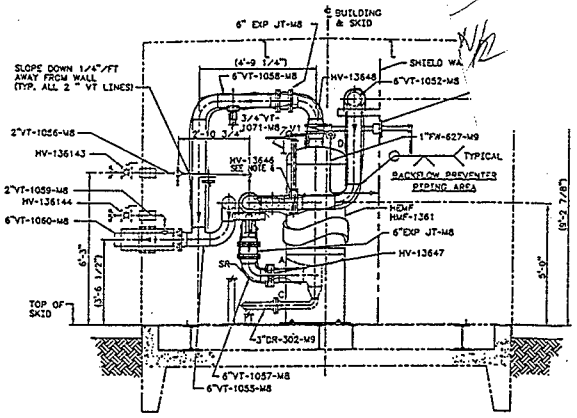

B SECTION

-2 0 2 4
SCALE IN FEET

NTROLLED DOCUMENT
STATION NO. 4
DATE APR 01 1997
PROJ / WO W320
NO PLE-2

1	INTERIM FIELD VERIFIED PER ECN W320-592, INC ECN W320-164, 269, 435		

H-2-818423 | DRAWING LIST

9815480A | DCS.$ 22:ACD2:12:55

CO RHODEN | 3 | 606533 | CONSTRUCTION
PH LANGOWSKI | U.S. DEPARTMENT OF ENERGY
RICHLAND OPERATIONS OFFICE
ICF KAISER HANFORD COMPANY
SEE PREV REV
SEE DR/AT FORM
HVAC
PROCESS BUILDING
PLAN & SECTIONS
W-320 TANK 241-C-106 SLUICING
THOMAS M MAY | 37 | H-2-818480 | 1
WHC | 03-20-95 | 1/2"=1'-0" | ER4319 | 1 of 5
2 PLOT SCALE: 1=24 | KEHCAO

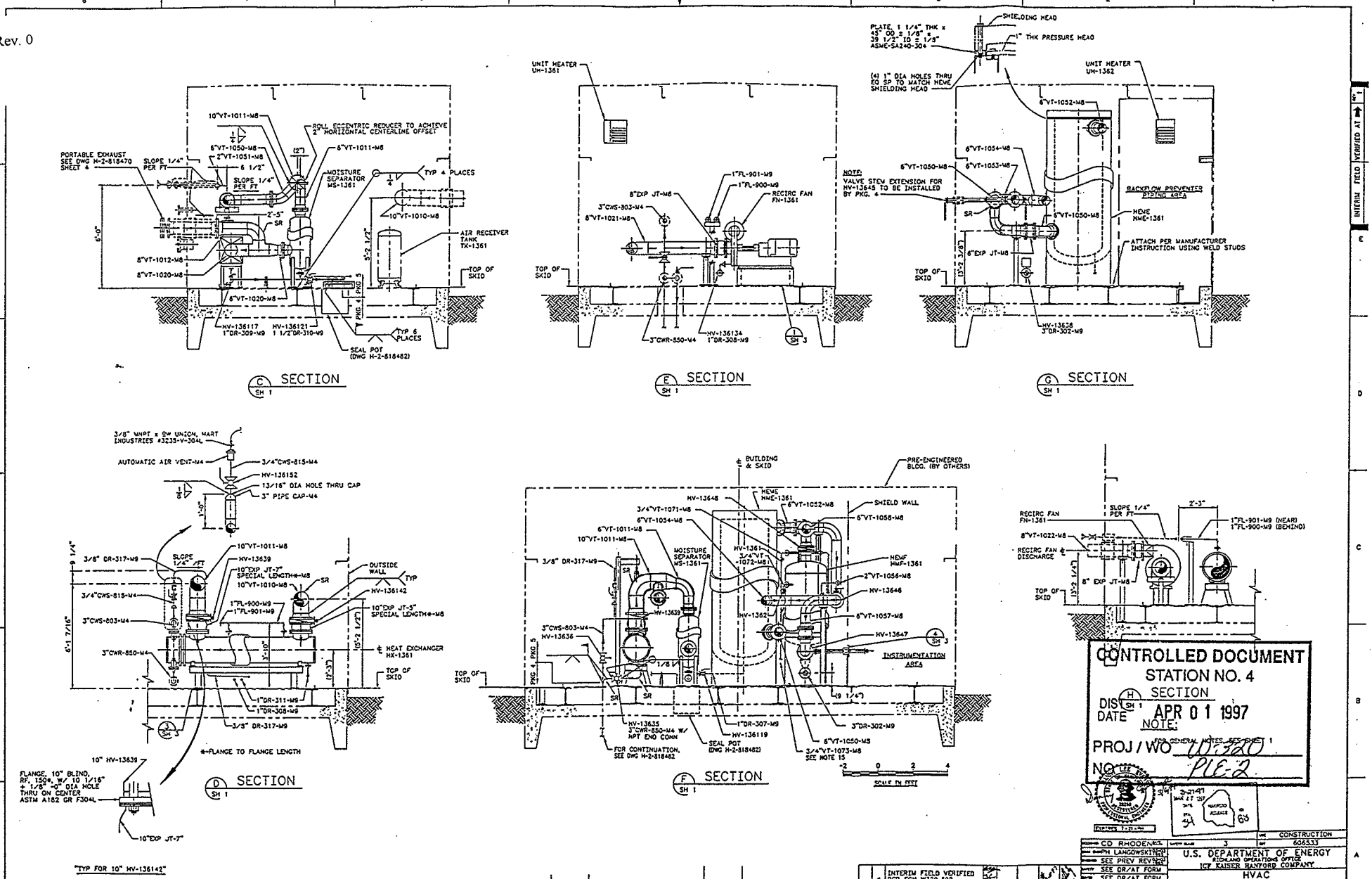
C SECTION
SH 1
E SECTION
SH 1
G SECTION
SH 1
D SECTION
SH 1
F SECTION
SH 1
SCALE IN FEET
CONTROLLED DOCUMENT
STATION NO. 4
SECTION
DIST
DATE APR 0 1 1997
NOTE:
PROJ / WO W-320
NO PLE-2
U.S. DEPARTMENT OF ENERGY
RICHLAND OPERATIONS OFFICE
ICF KAISER HANFORD COMPANY
HVAC
PROCESS BUILDING
SECTIONS & DETAILS
W-320 TANK 241-C-106 SLUICING
H-2-818480
INTERIM FIELD VERIFIED PER ECN W320-592, INC ECN W320-164, 308, 312, 343
CONSTRUCTION
606533
CD RHODEN
PH LANGOWSKI
SEE PREV REVISION
SEE DR/AT FORM
SEE DR/AT FORM
SEE DR/AT FORM
PH LANGOWSKI
THOMAS H MAY
PLOT SCALE: 1=24
KEHCAD

ECN-689
Remove wiring - - -

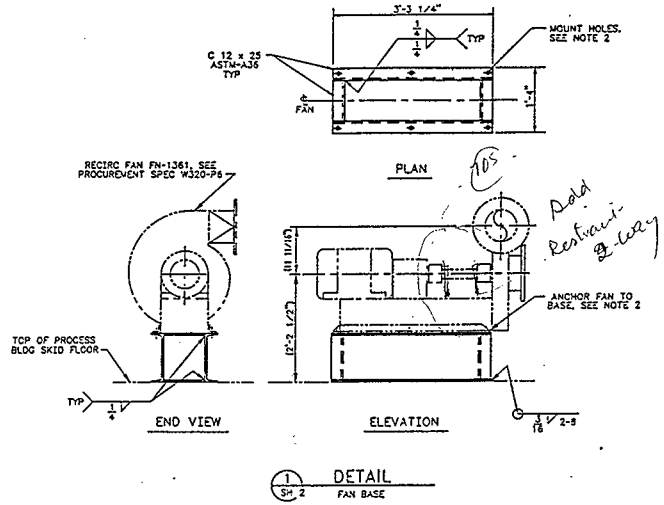

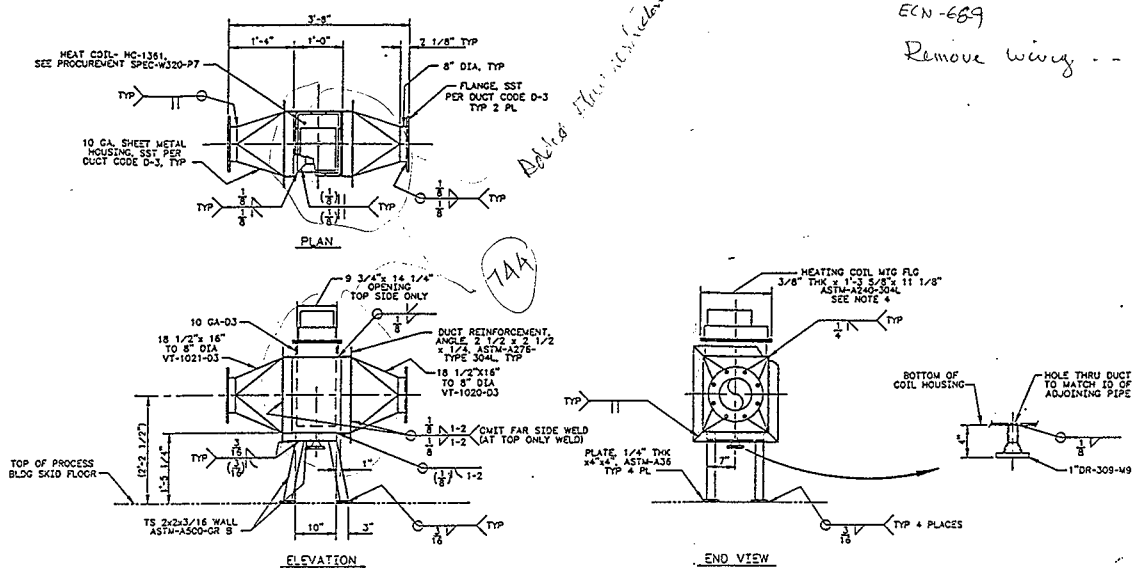

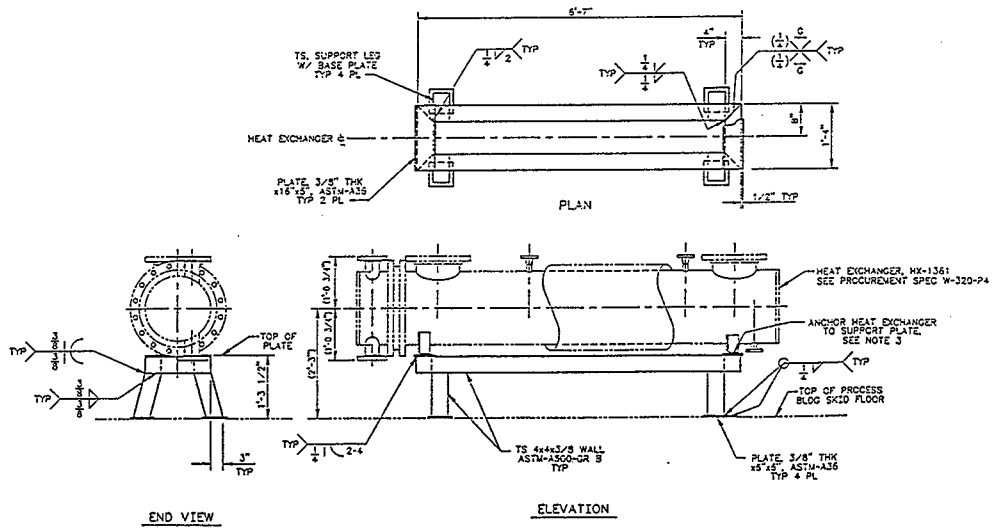

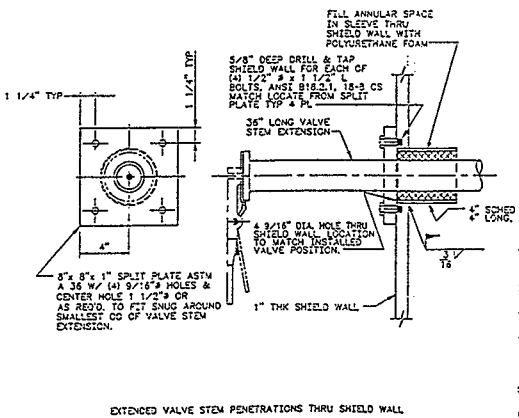

CONTROLLED DOCUMENT
STATION NO. 4
DIST DATE MAR 20 1997
PROJ / WO W-320
NO PLE-2

NOTES:

1. FOR GENERAL NOTES SEE SHEET 1.
2. MATCH DRILL WITH RECIRCULATING FAN FN-1361 SUPPORT BASE. SHIM AND SECURE PER MANUFACTURE'S RECOMENDATIONS.
3. MATCH DRILL WITH HEAT EXCHANGER HX-1361 SUPPORT BASE. SHIM AND SECURE PER MANUFACTURERS RECOMMENDATIONS.
4. MATCH DRILL WITH HEATER HC-1361 MOUNT FLANGE. USE FASTENERS PER MANUFACTURER'S RECOMENDATION. INSTALL FLANGE GASKET SUPPLIED WITH HEATER OR INSTALL FLANGE GASKET IN ACCORDANCE WITH DUCT CODE D-3 FOR AN AIR TIGHT SEAL.
5. SHIM AS REQUIRED FOR LEVEL INSTALLATION WITH 5/16 TYPE B BEVELED WASHERS, ANSI B18.23.1, 18-8 SST.
6. INSULATE DUCT PER CONSTRUCTION SPECIFICATION W320-C5.

1	W-320-342, -256 & -164 REV TO INCORP ECNS		
14			
8815480C	WINSS\ACD2:12.0:SS		

CONSTRUCTION
J. JURCILEVICZ — 3 — 606533
P H LANCWSKI
O PECK
SEE DR/AT FORM
SEE DR/AT FORM
SEE DR/AT FORM
P H LANCWSKI
GREG WYATT 3-30-95
THOMAS M WAY 9-20-95

U.S. DEPARTMENT OF ENERGY
RICHLAND OPERATIONS OFFICE
ICF KAISER HANFORD COMPANY

HVAC
PROCESS BUILDING
DETAILS

W-320 TANK 241-C-106 SLUICING
F 241-C-01 8900 H-2-818480 1
1"=1'-0" E94319 3 of 6
PLOT SCALE: 1=12 KEHCAO

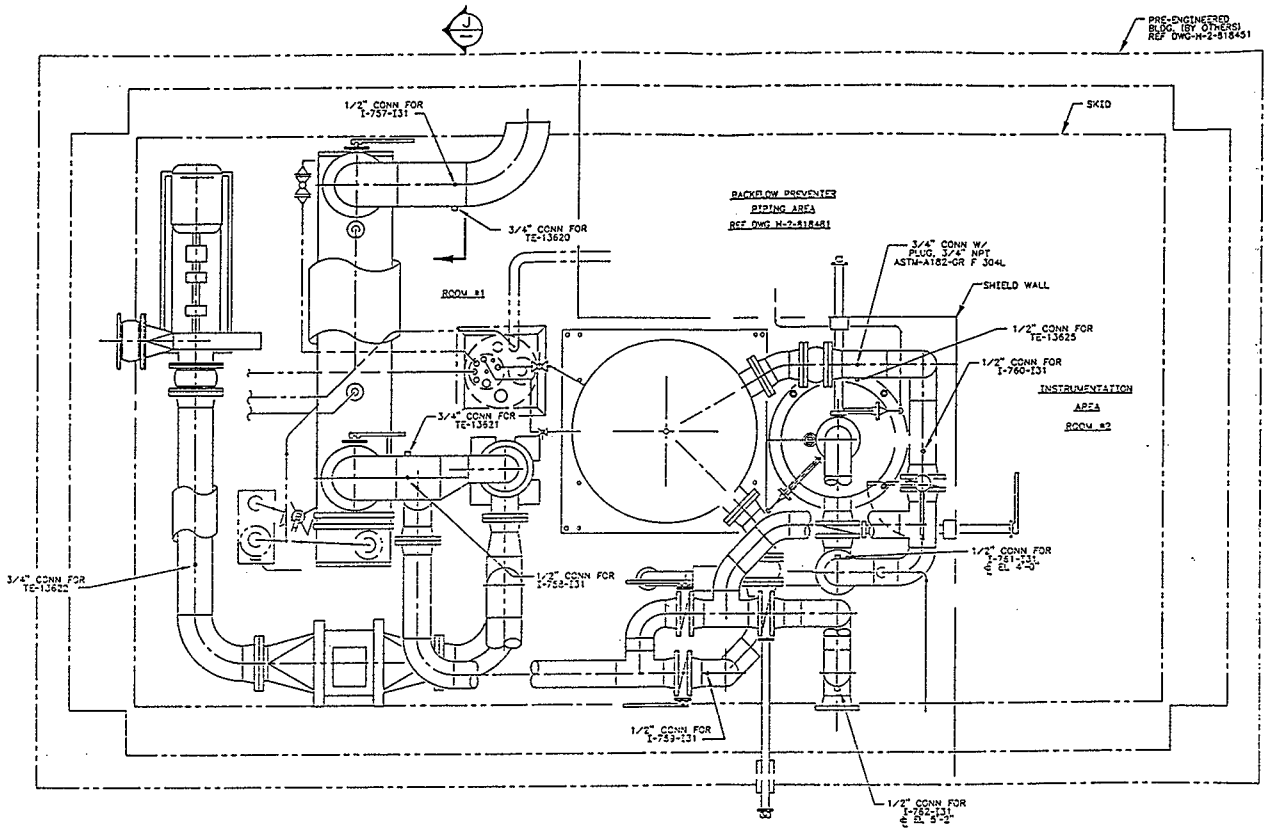

PLAN

SCALE: 1" = 1'-0"

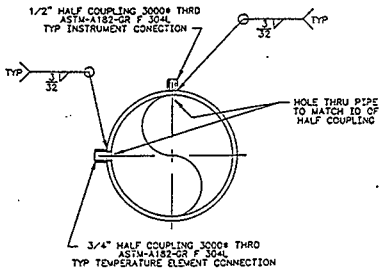

SECTION

SCALE: 3"=1'-0"

NOTES:

1. FOR GENERAL NOTES SEE SHEET 1.
2. ℄ ELEVATIONS ARE AS MEASURED FROM TOP OF SKID.
3. ALL INSTRUMENT CONNECTIONS SHALL BE INSTALLED IN APPROXIMATE LOCATIONS SHOWN.

CONTROLLED DOCUMENT
STATION NO. 4
DIST DATE MAR 20 1997
PROJ / WO W320
NO PCE-2

1	W-320-312 AND -164 REV TO INCORP ECNS	

CONSTRUCTION
606533
CD RHODEN
P H LANGOWSKI
D PECK
SEE DR/AT FORM
SEE DR/AT FORM
SEE DR/AT FORM
P H LANGOWSKI
15
GREG WYATT 3-30-95
THOMAS M MAY
WHC 9-20-95

U.S. DEPARTMENT OF ENERGY
RICHLAND OPERATIONS OFFICE
ICF KAISER HANFORD COMPANY

HVAC
PROCESS BUILDING
INSTRUMENT CONNECTIONS
W-320 TANK 241-C-106 SLUICING

F 241-C-106 8900 H-2-818480 1
SHOWN ER4319

2 PLOT SCALE: 1=12 KEHCAD

NOTES:

1. PIPE LOCATIONS AND LINE NUMBERS ARE SHOWN ON DRAWING H-2-818480 SHEET 1
2. FOR PIPE SUPPORT DETAILS SEE DRAWING H-2-818480 SHEET 6
3. FOR GENERAL NOTES, SEE SHEET 1
4. TOLERANCE FOR LOCATION OF PIPE SUPPORTS SHALL BE = 1/2".

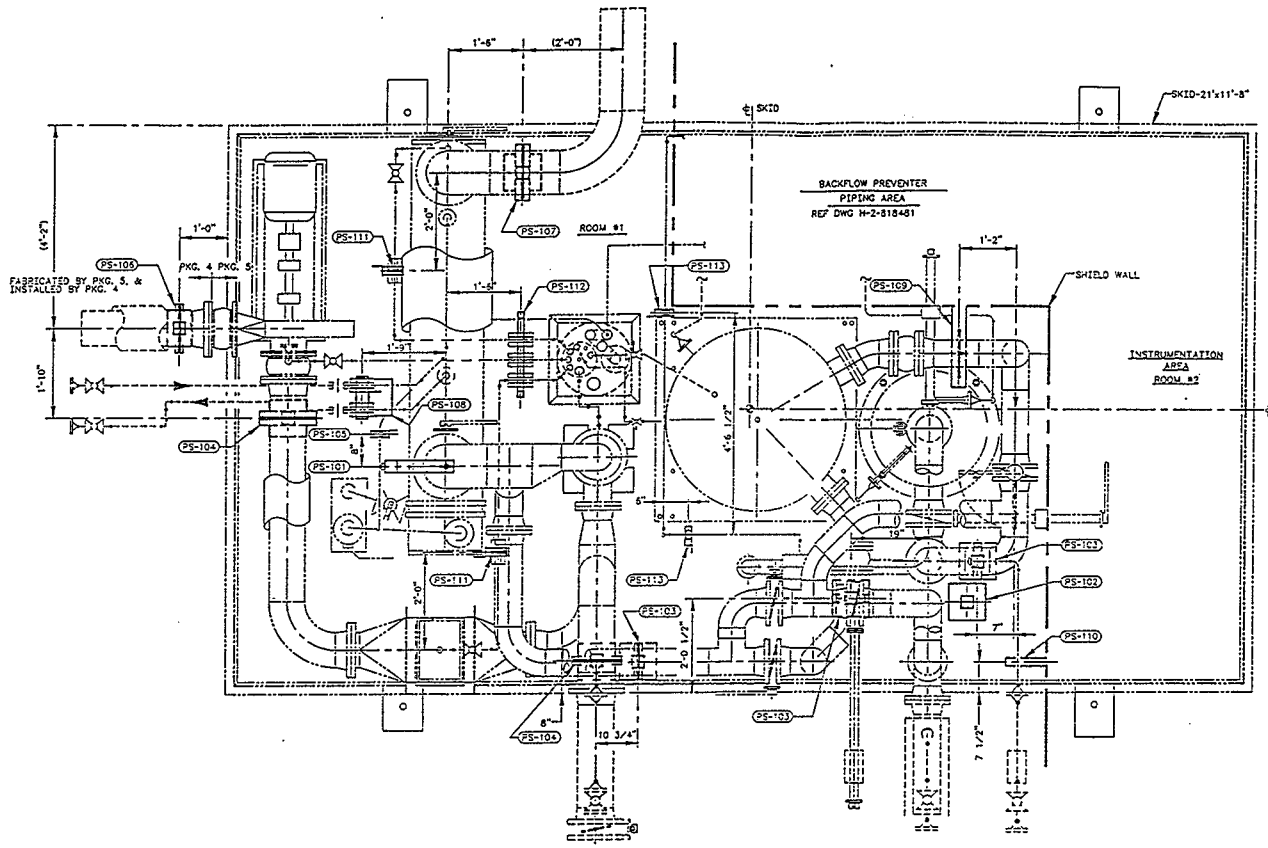

PLAN
SUPPORT LOCATIONS
SCALE: 1"=1'-0"

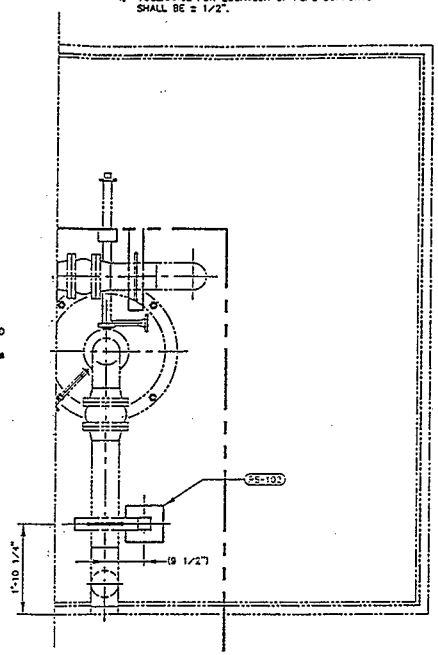

PARTIAL PLAN-UPPER
SCALE: 1"=1'-0"

CONTROLLED DOCUMENT
STATION NO. 4
DIST DATE MAR 20 1997
PROJ / WO W-320
NO PLE-2

CONSTRUCTION			
CO RHODEN	3	606533	
P H LANGOWSKI			
D PECK			
SEE DR/AT FORM			
SEE DR/AT FORM			
SEE DR/AT FORM			
P H LANGOWSKI			
18			
GREG WYATT 3-30-95			
THOMAS H MAY			
3-20-95			

U.S. DEPARTMENT OF ENERGY
RICHLAND OPERATIONS OFFICE
ICF KAISER HANFORD COMPANY

HVAC
PROCESS BUILDING
SUPPORT LOCATIONS

W320 TANK 241-C-106 SLUICING

F 241-C-01 8900 H-2-818480 1

SHOWN E24319 5 of 6

1 W-320-312, -256 & -164 REV TO INCORP ENCS

3B18ACE WINDS-ACD2-12.0-SS

PLOT SCALE: 1=12 KEHCAD

W320-28-033

Process Building Duct Support
Stress Analysis

KAISER ENGINEERS HANFORD	CALCULATION IDENTIFICATION AND INDEX	Page i of ii Date 3-1-95

This sheet shows the status and description of the attached Design Analysis sheets.

Discipline 28 - HVAC WO/Job No. ER4319/W320 Calculation No. ~~W320-A-033~~ W320-28-033

Project No. & Name W320, Tank 241-C-106 Sluicing

Calculation Item Process Building Duct Support Stress Analysis

These calculations apply to:

Dwg. No. H-2-818480 Rev. No. 0

Dwg. No. Rev. No.

Other (Study, CDR) Rev. No.

The status of these calculations is:

- ☐ Preliminary Calculations
- ☒ Final Calculations
- ☐ Check Calculations (On Calculation Dated)
- ☐ Void Calculation (Reason Voided)

Incorporated in Final Drawings? ☒ Yes ☐ No

This calculation verified by independent "check" calculations? ☐ Yes ☒ No

Original and Revised Calculation Approvals:

	Rev. 0 Signature/Date	Rev. 1 Signature/Date	Rev. 2 Signature/Date
Originator	Rodney C. Campbell 3-1-95		
Checked by	[illegible] 3-1-95 ~~2-27-95~~		
Approved by	[illegible] 3/1/95		
Checked Against Approved Vendor Data	Charles T. Li 4/16/98		

INDEX

Design Analysis Page No.	Description
i	Calculation Identification and Index
ii	Calculation Cross Index
1	Objective, Criteria, Given Data, Assumptions, Methods, References
1	Calculation
18	Conclusions
	Appendix A

KEH 0378.00 (06/92)

CALCULATION CROSS INDEX (Typical)

Subject Calculation No. W320-H-033

Subject Calculation Revision No.	Superceded by Calculation No.	These interfacing calculation/documents provide input to the subject calculation, and if revised may require revision of the subject calculation.		Results and conclusions of the subject calculation are used in these interfacing calculations and/or documents.		Does the output interface calculation/ documents require revision?		Has the output interface calculation/ documents been revised?		Discipline manager's signature and date indicating evaluation complete.
		Calculation/Document No.	Revision No.	Calculation/Document No.	Revision No.	Yes	No	Yes	No	
0		W320-~~H~~ 28-032	0				✓		✓	D L Evans 4/2/98
0		H-2-818480	0	H-2-818480	0		✓		✓	D L Evans 4/2/98

ICF Kaiser Hanford Company

DESIGN ANALYSIS

Calc. No. W320-~~H~~28-033
Revision 0
Page No. 1 **of** 18

Client WHC
Subject Process Building Duct Support Stress Analysis
Location: Tank 241-C-106

WO/Job No. ER4319/W320
Date 3/1/95 **By** Rodney C. Campbell
Checked 3/1/95 **By** N. JUPLO
Revised **By**

OBJECTIVE:
The objective of this calculation is to verify that the Process Building HVAC ducting supports meet ASME B31.3 code stress requirements.

CRITERIA:
1. Functional Design Criteria WHC-SD-W320-FDC-001, Rev. 2.
2. ASME B31.3-1993, Chemical Plant and Petroleum Refinery Piping

GIVEN DATA:
1. Minimum design temperature: 50°F.
2. Maximum design temperature: 180°F.
3. All supports are made from ASTM A36, Grade B carbon steel or ASTM A 500 Grade B carbon steel.
4. All ducting is safety class 3.
5. All plates are made from ASTM A36 steel.
6. Maximum allowable stress of ASTM A36 steel is 17, 800 psi.
7. Yield stress of ASTM A500 steel is 42,000 psi.

ASSUMPTIONS:
1. All supports were analyzed as Y-Stops due to the fact that the restraining bolt is on the outside of the insulation and its coverin making it impossible to control the pipe. The Y-Stop can only carry a load in the vertical downward direction. Horizontal loads will come due to friction between the support and the pipe.

METHODS:
Hand calculations using Mathcad 5.0.

REFERENCES:
1. Drawing H-2-818480, Rev. ~~8~~ 1.
2. Calculation W320-~~H~~28-32, Process Building Pipe Stress.

4. AISC Manual of Steel Construction, Ninth Edition.
5. Blodgett, Design of Welded Structures

8. ASTM A 500-93 Specification for Cold-Formed Welded and Seamless Carbon Steel Structural Tubing in Rounds and Shapes.
9. Grinnell Pipe Hanger Handbook.

CALCULATION:

Maximum allowable stress of A36 carbon steel at 120° F is: $F_{36} := 17800 \cdot psi$

Yield stress of A500, Grade B carbon steel at 120° is: $F_{y500} := 42000 \cdot psi$ Ref. 8

Young's modulus E is: $E := 29 \cdot 10^6 \cdot psi$ Ref. 4

There are five types of pipe supports used in the Process Building. The worst load on each type of support will be used to verify that the support is adequate.

1. Analyze the pipe support PS-101 (loads from Autopipe analysis W320H32A).

Client WHC
Subject Process Building Duct Support Stress Analysis
Location: Tank 241-C-106

WO/Job No. ER4319/W320
Date 3/1/95 **By** Rodney C. Campbell
Checked 3/1/95 **By** N. Jurlo
Revised **By**

Pipe support PS-101 is a hanger that supports the 10" line at the elbow. A 3" x 1/2" x 7-5/8" plate is welded to the centerline of the pipe. A clevis and rod connect to the plate and is supported by a 3" x 3-1/2" x 1/4" steel angle. The steel angle is welded t a 3" x 3" x 3/16" tube. The tube is welded to a baseplate that is welded to the floor.

4x4x1/4 TS

The loads on the hanger are:

$F_{ha} := 0 \cdot lbf$ First horizontal load on hanger rod. Ref. 2.

$F_{hb} := 0 \cdot lbf$ Second horizontal load on hanger rod. Ref. 2.

$F_{v1} := 1311 \cdot lbf$ Vertical load on hanger rod. Ref. 2.

$F_{v2} := 8.02 \cdot lbf$ Weight of Angle. Ref. 4.

$F_v := F_{v1} + F_{v2}$ Total vertical load.

The distance from the support to the load is: $L_a := 12 \cdot in$ Ref. 1

The length of the column is: $L_{ps101} := 7.1875 \cdot ft$ Ref. 1

The cross-sectional area of the column is: $A_{ps101} := 3.59 \cdot in^2$ Ref. 4

The section modulus of the 4" x 4" x 1/4" rectangular tube is: $S_{ps101} := 4.11 \cdot in^3$ Ref. 4

Governing radius of gyration of the column, r is: $r := 1.51 \cdot in$ Ref. 4

The section modulus of the 3" x 3" x 3/16" tube steel is: $S_a := 1.73 \cdot in^3$ Ref. 4

A. Verify that the tube steel is adequate to carry the load.

The tube steel can be analyzed as a cantilever with a concentrated load at any point.

$M := F_{v1} \cdot L_a$ $M = 15732 \cdot lbf \cdot in$

$f_b := \frac{M}{S_a}$

$f_b = 9093.64 \cdot psi$ Calculated bending stress

$f_b < F_{36} = 1$ The calculated bending stress is less than the allowable. The tube steel will not fail.

B. Determine if the combined stresses on support PS-101 satisfy the requirements of the AISC manual. The combined stresses are determined per section 1.6, pg 5.26, Ref. 4.

Determine the allowable load in compression F_{a500}.

Determine if C_c is less than or greater than kl/r.

$C_c := \sqrt{\frac{2 \cdot \pi^2 \cdot E}{F_{y500}}}$ $C_c = 116.75$

$K := 2$ Ref. 4, Table C1.8.1

$\frac{K \cdot L_{ps101}}{r} = 114.24$

Because the kl/r is less than C_c, F_{a500} (allowable compression stress) is determined from the following formula.

$$F_{a500} := \frac{\left[1 - \frac{\left(\frac{K \cdot L_{ps101}}{r}\right)^2}{2 \cdot C_c^{\,2}}\right] \cdot F_{y500}}{\left(\frac{5}{3}\right) + \frac{3 \cdot \left(\frac{K \cdot L_{ps101}}{r}\right)}{8 \cdot C_c} - \frac{\left(\frac{K \cdot L_{ps101}}{r}\right)^3}{8 \cdot C_c^{\,3}}}$$

$F_{a500} = 11423.03 \cdot psi$ Allowable compression stress. Ref. 4.

Determine if f_a/F_a is less than 0.15.

$$f_a := \frac{F_v}{A_{ps101}} \qquad f_a = 367.42 \cdot psi$$

$$\frac{f_a}{F_{a500}} = 0.0322$$

Because f_a/F_a is less than 0.15, formula 1.6-2 may be used.

Determine the allowable bending stress, F_{b500}.

$$F_{b500} := .60 \cdot F_{y500} \qquad F_{b500} = 25200 \cdot psi$$

Determine bending stress, f_b.

$$M := F_v \cdot L_a \qquad M = 15828.24 \cdot lbf \cdot in$$

$$f_b := \frac{M}{S_{ps101}} \qquad f_b = 3851.15 \cdot psi$$

Verify that the stresses meet the requirements of 1.6-2.

$$\frac{f_a}{F_{a500}} + \frac{f_b}{F_{b500}} = 0.185$$

The stresses meet the requirements of section 1.6-2, by being less than or equal to one.

C. Verify that the welds on support PS-101 are adequate to carry the load.

Calculate the required size of the fillet weld holding the tube steel to the tube steel.

The drawing shows a 1/4" fillet weld holding the tube steel to the tube steel.

$\omega := .25 \cdot in$ Size of fillet weld.

$l := 4 \cdot \cancel{3} \cdot in$ 12 Length of weld. All around tube steel.

$\tau := 9600 \cdot psi$ Allowable shear stress. Ref. 5, Chapter 7, Table 6.

$b := 3 \cdot in$ Horizontal length of weld on tube steel.

$d := 3 \cdot in$ Vertical length of weld on tube steel.

$$f_t := \frac{F_v}{l} \qquad f_t = 109.92 \cdot \frac{lbf}{in}$$ Shear load on weld.

Client WHC
Subject Process Building Duct Support Stress Analysis
Location: Tank 241-C-106

WO/Job No. ER4319/W320
Date 3/1/95 **By** Rodney C. Campbell
Checked 3/1/95 **By** N. JUPLO
Revised **By**

$S_w := b \cdot d + \frac{d^2}{3}$ Ref. 5, Table 5.

$f_b := \frac{M}{S_w}$ $f_b = 1319.02 \cdot \frac{lbf}{in}$ Bending load on weld.

$f_r := \sqrt{f_t^2 + f_b^2}$ $f_r = 1323.59 \cdot \frac{lbf}{in}$ Resultant load on weld.

$\omega_r := \frac{f_r}{\tau \cdot .707}$ Required size of fillet weld. Ref. 5, Chapter 7.

$\omega_r = 0.195 \cdot in$ Calculated fillet weld required to carry the load.

$\omega_r < \omega = 1$ This weld is strong enough to carry the maximum load.

Calculate the required size of the throat of the fillet weld holding the plate to the elbow.

The plate dimensions are 3" x 1/2" x 7-5/8" and it is cut to conform to the outer radius of a 10", short radius elbow. For the calculation, the increase in length of the weld due to the curvature of the elbow will not be considered. The plate is welded t the elbow with a 1/4" fillet weld.

$\omega := .25 \cdot in$ Throat of weld.

$l := 2 \cdot (3 \cdot in + .5 \cdot in)$ Length of weld.

$\tau := 9600 \cdot psi$ Allowable shear stress. Ref. 5, Chapter 7, Table 6.

$f_t := \frac{F_v}{l}$ $f_t = 188.43 \cdot \frac{lbf}{in}$

$f_{xa} := \frac{F_{ha}}{l}$ $f_{xa} = 0 \cdot \frac{lbf}{in}$

$f_{xb} := \frac{F_{hb}}{l}$ $f_{xb} = 0 \cdot \frac{lbf}{in}$

$f_r := \sqrt{f_t^2 + f_{xa}^2 + f_{xb}^2}$ $f_r = 188.43 \cdot \frac{lbf}{in}$

$\omega_r := \frac{f_r}{\tau \cdot .707}$ Required size of fillet weld. Ref. 5, Chapter 7.

$\omega_r = 0.0278 \cdot in$ Calculated size of fillet weld required to carry the load.

$\omega_r < \omega = 1$ This weld is strong enough to carry the maximum load.

HNF-2486, Rev. 0
Page D-6

Calculate the required size of the fillet weld holding the tube steel to the plate on the floor.

The plate on the floor is 6" x 6" x 1/2". A 3/16" fillet weld all around holds the tube steel to the plate.

$\omega := .1875 \cdot in$ Throat of weld.

$\tau := 9600 \cdot psi$ Allowable shear stress. Ref. 5, Chapter 7, Table 6.

$b := 4 \cdot in$

$d := 4 \cdot in$

$l := 2 \cdot b + 2 \cdot d$

$f_t := \frac{F_v}{l}$ $f_t = 82.44 \cdot \frac{lbf}{in}$

$S_w := b \cdot d + \frac{d^2}{3}$

$M = 15828.24 \cdot lbf \cdot in$

$f_b := \frac{M}{S_w}$ $f_b = 741.95 \cdot \frac{lbf}{in}$

$f_r := \sqrt{f_b^2 + f_t^2}$ $f_r = 746.51 \cdot \frac{lbf}{in}$

$\omega_r := \frac{f_r}{\tau \cdot .707}$ Required size of fillet weld. Ref. 5, Chapter 7.

$\omega_r = 0.11 \cdot in$ Calculated size of fillet weld required to carry the load.

$\omega_r < \omega = 1$ This weld is strong enough to carry the maximum load.

Calculate the required size of the fillet weld holding the plate to the floor.

The plate on the floor is 6" x 6" x 1/2". A 3/16" fillet weld all around holds the plate to the floor.

$\omega := .1875 \cdot in$ Throat of weld.

$\tau := 9600 \cdot psi$ Allowable shear stress. Ref. 5, Chapter 7, Table 6.

$b := 6 \cdot in$

$d := 6 \cdot in$

$l := 2 \cdot b + 2 \cdot d$

$f_t := \frac{F_v}{l}$ $f_t = 54.96 \cdot \frac{lbf}{in}$

$S_w := b \cdot d + \frac{d^2}{3}$

$M = 15828.24 \cdot lbf \cdot in$

$f_b := \frac{M}{S_w}$ $f_b = 329.76 \cdot \frac{lbf}{in}$

$f_r := \sqrt{f_b^2 + f_t^2}$ $f_r = 334.3 \cdot \frac{lbf}{in}$

$\omega_r := \frac{f_r}{\tau \cdot .707}$ Required size of fillet weld. Ref. 5, Chapter 7.

$\omega_r = 0.0493 \cdot in$ Calculated size of fillet weld required to carry the load.

$\omega_r < \omega = 1$ This weld is strong enough to carry the maximum load.

D. Verify that the threaded rod, clevis and pin on support PS-101 are adequate to carry the load.

From reference 9, the allowable on each of these pieces is 1810 lbf. They are adequate to carry the load.

E. Verify the stresses in the plate do not exceed the allowables.

$A := 3 \cdot in \cdot 3 \cdot in$ Area that force is acting upon.

$h := 1 \cdot in$

$b := 3 \cdot in + 4 \cdot 1 \cdot in$ Effective width of plate, D + 4T.

$$S := \frac{b \cdot h^2}{6}$$

The stress generated in the base plate is:

$$\sigma := \frac{F_v}{A} + \frac{M}{S}$$

$$\sigma = 13713.62 \cdot psi$$

The stress of 13,696 psi is less than the allowable stress of 17,800 psi. The plate thickness is acceptable.

2. Analyze the pipe support PS-102 (loads from Autopipe analysis W320H32A).

Pipe support PS-102 is a 3" x 3-1/2" x1/4" angle welded to a 3" x 3" x 3/16" tube. The pipe rests on the angle.

The loads on the support are:

$F_{ha} := 0 \cdot lbf$ First horizontal load on support. Ref. 2.

$F_{hb} := 0 \cdot lbf$ Second horizontal load on support. Ref. 2.

$F_{v1} := 23 \cdot lbf$ Vertical load on support. Ref. 2.

$F_{v2} := 0 \cdot lbf$ Weight of Angle. Ref. 4.

$F_v := F_{v1} + F_{v2}$ Total vertical load.

HNF-2486, Rev. 0
Page D-8

The length of the column is: $L_{ps102} := 6.9 \cdot ft$ Ref. 1

The distance from the support to the load is: $L_a := 8 \cdot in$ Ref. 1

The cross-sectional area of the column is: $A_{ps102} := 2.02 \cdot in^2$ Ref. 4

The section modulus of the 3" x 3" x 3/16" rectangular tube is: $S_{ps102} := 1.73 \cdot in^3$ Ref. 4

Governing radius of gyration of the column, r is: $r := 1.13 \cdot in$ Ref. 4

The section modulus of the 3" x 3-1/2" x 1/4" (with bending about the 3-1/2" leg) angle is: $S_a := .776 \cdot in^3$ Ref. 4

Client WHC
Subject Process Building Duct Support Stress Analysis
Location: Tank 241-C-106

WO/Job No. ER4319/W320
Date 3/1/95 **By** Rodney C. Campbell
Checked 3/1/95 **By** N. JUPLO
Revised **By**

A. Verify that the angle is adequate to carry the load.

The angle can be analyzed as a cantilever with a concentrated load at any point.

$M := F_{v1} \cdot L_a$ $\qquad M = 184 \cdot lbf \cdot in$

$f_b := \frac{M}{S_a}$

$f_b = 237.11 \cdot psi$ Calculated bending stress

$f_b < F_{36} = 1$ The calculated bending stress is less than the allowable. The angle will not fail.

B. Determine if the combined stresses on support PS-102 satisfy the requirements of the AISC manual. The combined stresses are determined per section 1.6, pg 5.26, Ref. 4.

Determine the allowable load in compression F_{a500}.

Determine if C_c is less than or greater than kl/r.

$C_c := \sqrt{\frac{2 \cdot \pi^2 \cdot E}{F_{y500}}}$ $\qquad C_c = 116.75$

$K := 2$ Ref. 4, Table C1.8.1

$\frac{K \cdot L_{ps102}}{r} = 146.55$

Because the Kl/r is greater than C_c, F_{a500} (allowable compression stress) is determined from the following formula.

$F_{a500} := \frac{12 \cdot \pi^2 \cdot E}{23 \cdot \left(\frac{K \cdot L_{ps102}}{r}\right)^2}$ $\qquad F_{a500} = 6953.24 \cdot psi$ Allowable compression stress. Ref. 4.

Determine if f_a/F_a is less than 0.15.

$f_a := \frac{F_v}{A_{ps102}}$ $\qquad f_a = 11.39 \cdot psi$

$\frac{f_a}{F_{a500}} = 0.0016$

Because f_a/F_a is less than 0.15, formula 1.6-2 may be used.

Determine the allowable bending stress, F_{b500}.

$F_{b500} := .60 \cdot F_{y500}$ $\qquad F_{b500} = 25200 \cdot psi$

Determine bending stress, f_b.

$M := F_v \cdot L_a$ $\qquad M = 184 \cdot lbf \cdot in$

$f_b := \frac{M}{S_{ps102}}$ $\quad f_b = 106.36 \cdot psi$

Verify that the stresses meet the requirements of 1.6-2.

$$\frac{f_a}{F_{a500}} + \frac{f_b}{F_{b500}} = 0.0059$$

The stresses meet the requirements of section 1.6-2, by being less than or equal to one.

C. Verify that the welds on support PS-102 are adequate to carry the load.

Calculate the required size of the fillet weld holding the angle to the tube steel.

The drawing shows a 3/16" fillet weld holding the angle to the tube steel.

$\omega := .1875 \cdot in$ Size of fillet weld.

$l := 2 \cdot 3 \cdot in + 3.5 \cdot in$ Length of weld. Inside and on top of the angle.

$\tau := 9600 \cdot psi$ Allowable shear stress. Ref. 5, Chapter 7, Table 6.

$b := 3 \cdot in$ Horizontal length of weld on angle.

$d := 3.5 \cdot in$ Vertical length of weld on angle.

$f_t := \frac{F_v}{l}$ $\quad f_t = 2.42 \cdot \frac{lbf}{in}$ Shear load on weld.

$S_w := \frac{d^2 \cdot (4 \cdot b + d)}{6 \cdot (2 \cdot b + d)}$ Ref. 5, Table 5.

$M = 184 \cdot lbf \cdot in$

$f_b := \frac{M}{S_w}$ $\quad f_b = 55.24 \cdot \frac{lbf}{in}$ Bending load on weld.

$f_r := \sqrt{f_t^2 + f_b^2}$ $\quad f_r = 55.29 \cdot \frac{lbf}{in}$ Resultant load on weld.

$\omega_r := \frac{f_r}{\tau}$ Required fillet weld. Ref. 5, Chapter 7.

$\omega_r = 0.0058 \cdot in$ Calculated fillet weld required to carry the load.

$\omega_r < \omega = 1$ This weld is strong enough to carry the maximum load.

HNF-2486, Rev. 0
Page D-10

Calculate the required size of the fillet weld holding the pipe to the plate.

The plate on the floor is 9" x 9" x 1/2". A 3/16" fillet weld all around holds the tube steel to the plate.

$\omega := .1875 \cdot in$ Size of weld.

$\tau := 9600 \cdot psi$ Allowable shear stress. Ref. 5, Chapter 7, Table 6.

$b := 3 \cdot in$

$d := 3 \cdot in$

$l := 2 \cdot b + 2 \cdot d$

$f_t := \frac{F_v}{l}$ $\qquad f_t = 1.92 \cdot \frac{lbf}{in}$

$S_w := b \cdot d + \frac{d^2}{3}$

$M = 184 \cdot lbf \cdot in$

$f_b := \frac{M}{S_w}$ $\qquad f_b = 15.33 \cdot \frac{lbf}{in}$

$f_r := \sqrt{f_b^2 + f_t^2}$ $\qquad f_r = 15.45 \cdot \frac{lbf}{in}$

$\omega_r := \frac{f_r}{\tau \cdot .707}$ Required size of fillet weld. Ref. 5, Chapter 7.

$\omega_r = 0.0023 \cdot in$ Calculated size of fillet weld required to carry the load.

$\omega_r < \omega = 1$ This weld is strong enough to carry the maximum load.

Calculate the required size of the fillet weld holding the plate to the floor.

The plate on the floor is 9" x 9" x 1/2". A 3/16" fillet weld all around holds the plate to the floor.

$\omega := .1875 \cdot in$ Throat of weld.

$\tau := 9600 \cdot psi$ Allowable shear stress. Ref. 5, Chapter 7, Table 6.

$b := 9 \cdot in$

$d := 9 \cdot in$

$l := 2 \cdot b + 2 \cdot d$

$f_t := \frac{F_v}{l}$ $\qquad f_t = 0.64 \cdot \frac{lbf}{in}$

$S_w := b \cdot d + \frac{d^2}{3}$

$M = 184 \cdot lbf \cdot in$

$f_b := \frac{M}{S_w}$ $\qquad f_b = 1.7 \cdot \frac{lbf}{in}$

$f_r := \sqrt{f_b^2 + f_t^2}$ $\qquad f_r = 1.82 \cdot \frac{lbf}{in}$

$\omega_r := \frac{f_r}{\tau \cdot .707}$ Required size of fillet weld. Ref. 5, Chapter 7.

$\omega_r = 0.0003 \cdot in$ Calculated size of fillet weld required to carry the load.

$\omega_r < \omega = 1$ This weld is strong enough to carry the maximum load.

D. Verify the stresses in the plate do not exceed the allowables.

$A := 3 \cdot in \cdot 3 \cdot in$ Area that force is acting upon.

$h := .5 \cdot in$

$b := 3 \cdot in + 4 \cdot .5 \cdot in$ Effective width of plate, D + 4T.

$$S := \frac{b \cdot h^2}{6}$$

The stress generated in the base plate is:

$$\sigma := \frac{F_v}{A} + \frac{M}{S}$$

$\sigma = 885.76 \cdot psi$

The stress of 1156 psi is less than the allowable stress of 17,800 psi. The plate thickness is acceptable.

3. Analyze the pipe support PS-103 (loads from Autopipe analysis W320H32A).

Pipe support PS-103 is a 3-1/2" x 3-1/2" x 1/4" angle welded to the top of a 3" x 3" x 3/16" tube. The tube column is welded to a plate that is welded to the floor. Pipe support PS-103 is used in three locations. The longest column and the greatest load will be used to verify that it is adequate to carry the loads imposed.

The highest loads on the support are:

$F_{ha} := 97 \cdot lbf$ First horizontal load on support. Ref. 2.

$F_{hb} := 65 \cdot lbf$ Second horizontal load on support. Ref. 2.

$F_v := 544 \cdot lbf$ Vertical load on support. Ref. 2.

The length of the longest column is: $L_{ps103} := 5.08 \cdot ft$

The cross-sectional area of the column is: $A_{ps103} := 2.02 \cdot in^2$ Ref. 4

The section modulus of the 3" x 3" x 3/16" rectangular tube is: $S_{ps103} := 1.73 \cdot in^3$ Ref. 4

Governing radius of gyration of the column, r is: $r := 1.13 \cdot in$ Ref. 4

A. Determine if the combined stresses on support PS-103 satisfy the requirements of the AISC manual. The combined stresses are determined per section 1.6, pg 5.26, Ref. 4.

Determine the allowable load in compression F_{a500}.

Determine if C_c is less than or greater than kl/r.

$$C_c := \sqrt{\frac{2 \cdot \pi^2 \cdot E}{F_{y500}}} \qquad C_c = 116.75$$

$K := 2$ Ref. 4, Table C1.8.1

$$\frac{K \cdot L_{ps103}}{r} = 107.89$$

Because the Kl/r is smaller than C_c, F_{a500} (allowable compression stress) is determined from the following formula.

$$F_{a500} := \frac{\left[1 - \frac{\left(\frac{K \cdot L_{ps103}}{r}\right)^2}{2 \cdot C_c^2}\right] \cdot F_{y500}}{\left(\frac{5}{3}\right) + \frac{3 \cdot \left(\frac{K \cdot L_{ps103}}{r}\right)}{8 \cdot C_c} - \frac{\left(\frac{K \cdot L_{ps103}}{r}\right)^3}{8 \cdot C_c^3}}$$

$F_{a500} = 12568.73 \cdot psi$ Allowable compression stress. Ref. 4.

Determine if f_a/F_a is less than 0.15.

$$f_a := \frac{F_v}{A_{ps103}} \qquad f_a = 269.31 \cdot psi$$

$$\frac{f_a}{F_{a500}} = 0.0214$$

Because f_a/F_a is less than 0.15, formula 1.6-2 may be used.

Determine the allowable bending stress, F_{b500}.

$$F_{b500} := .60 \cdot F_{y500} \qquad F_{b500} = 25200 \cdot psi$$

Determine bending stress, f_b.

$$M := L_{ps103} \cdot \sqrt{F_{ha}^2 + F_{hb}^2} \qquad M = 7117.98 \cdot lbf \cdot in$$

$$f_b := \frac{M}{S_{ps103}} \qquad f_b = 4114.44 \cdot psi$$

Verify that the stresses meet the requirements of 1.6-2.

HNF-2486, Rev. 0
Page D-13

$$\frac{f_a}{F_{a500}} + \frac{f_b}{F_{b500}} = 0.1847$$

The stresses meet the requirements of section 1.6-2, by being less than or equal to one.

B. Verify that the welds on support PS-103 are adequate to carry the load.

Calculate the required size of the fillet weld holding the angle to the tube steel.

The weld holding the angle to the tube steel is a flare-bevel weld with a 3/16" fillet on top of that, both sides of the tube steel.

$\omega := .1875 \cdot in$ Size of weld.

$\tau := 9600 \cdot psi$ Allowable shear stress. Ref. 5, Chapter 7, Table 6.

$l := 2 \cdot 2.5 \cdot in$ Length of weld.

$f_t := \frac{F_v}{l}$ $f_t = 108.8 \cdot \frac{lbf}{in}$

$f_{xa} := \frac{F_{ha}}{l}$ $f_{xa} = 19.4 \cdot \frac{lbf}{in}$

$f_{xb} := \frac{F_{hb}}{l}$ $f_{xb} = 13 \cdot \frac{lbf}{in}$

$f_r := \sqrt{f_t^2 + f_{xa}^2 + f_{xb}^2}$ $f_r = 111.28 \cdot \frac{lbf}{in}$

$\omega_r := \frac{f_r}{\tau \cdot .707}$ Required size of fillet weld. Ref. 5, Chapter 7.

$\omega_r = 0.0164 \cdot in$ Calculated size of fillet weld required to carry the load.

$\omega_r < \omega = 1$ This weld is strong enough to carry the maximum load.

Calculate the required size of the fillet weld holding the tube steel to the plate.

The plate on the floor is 9" x 9" x 1/2". A 3/16" fillet weld all around holds the tube steel to the plate.

$\omega := .1875 \cdot in$ Size of weld.

$\tau := 9600 \cdot psi$ Allowable shear stress. Ref. 5, Chapter 7, Table 6.

$b := 3 \cdot in$

$d := 3 \cdot in$

$F_h := \sqrt{F_{ha}^2 + F_{hb}^2}$

$M := F_h \cdot L_{ps103}$

$S_w := b \cdot d + \frac{d^2}{3}$

$l := 4 \cdot b$

$f_t := \frac{F_v}{l}$ $f_t = 45.33 \cdot \frac{lbf}{in}$

$f_b := \frac{M}{S_w}$ $f_b = 593.16 \cdot \frac{lbf}{in}$

$f_r := \sqrt{f_t^2 + f_b^2}$ $f_r = 594.89 \cdot \frac{lbf}{in}$

$\omega_r := \frac{f_r}{\tau \cdot .707}$ Required size of fillet weld. Ref. 5, Chapter 7.

$\omega_r = 0.0876 \cdot in$ Calculated size of fillet weld required to carry the load.

$\omega_r < \omega = 1$ This weld is strong enough to carry the maximum load.

Calculate the required size of the fillet weld holding the plate to the floor.

The plate on the floor is 9" x 9" x 1/2". A 3/16" fillet weld all around holds the plate to the floor.

$\omega := .1875 \cdot in$ Throat of weld.

$\tau := 9600 \cdot psi$ Allowable shear stress. Ref. 5, Chapter 7, Table 6.

$b := 9 \cdot in$

$d := 9 \cdot in$

$l := 2 \cdot b + 2 \cdot d$

$f_t := \frac{F_v}{l}$ $f_t = 15.11 \cdot \frac{lbf}{in}$

$S_w := b \cdot d + \frac{d^2}{3}$

$M = 7117.98 \cdot lbf \cdot in$

$f_b := \frac{M}{S_w}$ $f_b = 65.91 \cdot \frac{lbf}{in}$

$f_r := \sqrt{f_t^2 + f_b^2}$ $f_r = 67.62 \cdot \frac{lbf}{in}$

$\omega_r := \frac{f_r}{\tau \cdot .707}$ Required size of fillet weld to carry load in tension. Ref. 5, Chapter 7.

$\omega_r = 0.01 \cdot in$ Calculated size of fillet weld required to carry the load.

$\omega_r < \omega = 1$ This weld is strong enough to carry the maximum load.

C. Verify the stresses in the plate do not exceed the allowables.

$M := L_{ps103} \cdot \sqrt{F_{ha}^2 + F_{hb}^2}$

$M = 593.16 \cdot ft \cdot lbf$

$h := .75 \cdot in$

$b := 3 \cdot in + 4 \cdot .75 \cdot in$ Effective width of plate, D + 4T.

$S := \frac{b \cdot h^2}{6}$

$\sigma := \frac{M}{S} + \frac{F_v}{A_{ps103}}$

$\sigma = 12923.49 \cdot psi$

The stress of 13,137 psi is less than the allowable stress of 17,800 psi. The plate thickness is acceptable.

4. Analyze the pipe support PS-104 (loads from Autopipe analysis W320H32C).

Pipe support PS-104 is a 3-1/2" x 3-1/2" x 1/4" angle welded to the top of a 3" x 3" x 3/16" tube. The tube column is welded to a plate that is welded to the floor. Pipe support PS-104 is used in two locations. The longest column and the highest load will be used to verify that it is adequate to carry the loads imposed.

The highest loads on the support are:

$F_{ha} := 25 \cdot lbf$ First horizontal load on support. Ref. 2.

$F_{hb} := 0 \cdot lbf$ Second horizontal load on support. Ref. 2.

$F_v := 159 \cdot lbf$ Vertical load on support. Ref. 2.

The length of the longest column is: $L_{ps104} := 3.5 \cdot ft$

The cross-sectional area of the column is: $A_{ps104} := 2.02 \cdot in^2$ Ref. 4

The section modulus of the 3" x 3" x 3/16" rectangular tube is: $S_{ps104} := 1.73 \cdot in^3$ Ref. 4

Governing radius of gyration of the column, r is: $r := 1.13 \cdot in$ Ref. 4

A. Determine if the combined stresses on support PS-104 satisfy the requirements of the AISC manual. The combined stresses are determined per section 1.6, pg 5.26, Ref. 4.

Determine the allowable load in compression F_{a500}.

Determine if C_c is less than or greater than kl/r.

$$C_c := \sqrt{\frac{2 \cdot \pi^2 \cdot E}{F_{y500}}} \qquad C_c = 116.75$$

$K := 2$ Ref. 4, Table C1.8.1

$$\frac{K \cdot L_{ps104}}{r} = 74.34$$

Because the Kl/r is less than C_c, F_{a500} (allowable compression stress) is determined from the following formula.

$$F_{a500} := \frac{\left[1 - \frac{\left(\frac{K \cdot L_{ps103}}{r}\right)^2}{2 \cdot C_c^2}\right] \cdot F_{y500}}{\left(\frac{5}{3}\right) + \frac{3 \cdot \left(\frac{K \cdot L_{ps103}}{r}\right)}{8 \cdot C_c} - \frac{\left(\frac{K \cdot L_{ps103}}{r}\right)^3}{8 \cdot C_c^3}}$$

$F_{a500} = 12568.73 \cdot psi$ Allowable compression stress. Ref. 4.

Determine if f_a/F_a is less than 0.15.

$$f_a := \frac{F_v}{A_{ps104}} \qquad f_a = 78.71 \cdot psi$$

$$\frac{f_a}{F_{a500}} = 0.0063$$

Because f_a/F_a is less than 0.15, formula 1.6-2 may be used.

Determine the allowable bending stress, F_{b500}.

$F_{b500} := .60 \cdot F_{y500}$ $\qquad F_{b500} = 25200 \cdot psi$

Determine bending stress, f_b.

$M := L_{ps104} \cdot \sqrt{F_{ha}^2 + F_{hb}^2}$ $\qquad M = 1050 \cdot lbf \cdot in$

$f_b := \frac{M}{S_{ps104}}$ $\qquad f_b = 606.94 \cdot psi$

Verify that the stresses meet the requirements of 1.6-2.

$$\frac{f_a}{F_{a500}} + \frac{f_b}{F_{b500}} = 0.0303$$

The stresses meet the requirements of section 1.6-2, by being less than or equal to one.

B. Verify that the welds on support PS-104 are adequate to carry the load.

Calculate the required size of the fillet weld holding the angle to the tube steel.

The weld holding the angle to the tube steel is a flare-bevel weld with a 3/16" fillet on top of that, both sides of the tube steel.

$\omega := .1875 \cdot in$ Size of weld.

$\tau := 9600 \cdot psi$ Allowable shear stress. Ref. 5, Chapter 7, Table 6.

$l := 2 \cdot 2.5 \cdot in$ Length of weld.

$f_t := \frac{F_v}{l}$ $\qquad f_t = 31.8 \cdot \frac{lbf}{in}$

$f_{xa} := \frac{F_{ha}}{l}$ $\qquad f_{xa} = 5 \cdot \frac{lbf}{in}$

$f_{xb} := \frac{F_{hb}}{l}$ $\qquad f_{xb} = 0 \cdot \frac{lbf}{in}$

$f_r := \sqrt{f_t^2 + f_{xa}^2 + f_{xb}^2}$ $\qquad f_r = 32.19 \cdot \frac{lbf}{in}$

$\omega_r := \frac{f_r}{\tau \cdot .707}$ Required size of fillet weld. Ref. 5, Chapter 7.

$\omega_r = 0.0047 \cdot in$ Calculated size of fillet weld required to carry the load.

$\omega_r < \omega = 1$ This weld is strong enough to carry the maximum load.

Client WHC
Subject Process Building Duct Support Stress Analysis
Location: Tank 241-C-106

WO/Job No. ER4319/W320
Date 3/1/95 By Rodney C. Campbell
Checked 3/1/95 By N. JUPLO
Revised By

Calculate the required size of the fillet weld holding the tube steel to the plate.

The plate on the floor is 9" x 9" x 1/2". A 3/16" fillet weld all around holds the tube steel to the plate.

$\omega := .1875 \cdot in$ Size of weld.

$\tau := 9600 \cdot psi$ Allowable shear stress. Ref. 5, Chapter 7, Table 6.

$b := 3 \cdot in$

$d := 3 \cdot in$

$F_h := \sqrt{F_{ha}^2 + F_{hb}^2}$

$M := F_h \cdot L_{ps104}$

$S_w := b \cdot d + \frac{d^2}{3}$

$l := 4 \cdot b$

$f_t := \frac{F_v}{l}$ $f_t = 13.25 \cdot \frac{lbf}{in}$

$f_b := \frac{M}{S_w}$ $f_b = 87.5 \cdot \frac{lbf}{in}$

$f_r := \sqrt{f_t^2 + f_b^2}$ $f_r = 88.5 \cdot \frac{lbf}{in}$

$\omega_r := \frac{f_r}{\tau \cdot .707}$ Required size of fillet weld. Ref. 5, Chapter 7.

$\omega_r = 0.013 \cdot in$ Calculated size of fillet weld required to carry the load.

$\omega_r < \omega = 1$ This weld is strong enough to carry the maximum load.

Calculate the required size of the fillet weld holding the plate to the floor.

The plate on the floor is 9" x 9" x 1/2". A 3/16" fillet weld all around holds the plate to the floor.

$\omega := .1875 \cdot in$ Throat of weld.

$\tau := 9600 \cdot psi$ Allowable shear stress. Ref. 5, Chapter 7, Table 6.

$b := 9 \cdot in$

$d := 9 \cdot in$

$l := 2 \cdot b + 2 \cdot d$

$f_t := \frac{F_v}{l}$ $f_t = 4.42 \cdot \frac{lbf}{in}$

$S_w := b \cdot d + \frac{d^2}{3}$

$M = 1050 \cdot lbf \cdot in$

Client WHC
Subject Process Building Duct Support Stress Analysis
Location: Tank 241-C-106

WO/Job No. ER4319/W320
Date 3/1/95 By Rodney C. Campbell
Checked 3/1/95 By N. JUPLO
Revised By

$f_b := \frac{M}{S_w}$ $\quad f_b = 9.72 \cdot \frac{lbf}{in}$

$f_r := \sqrt{f_t^2 + f_b^2}$ $\quad f_r = 10.68 \cdot \frac{lbf}{in}$

$\omega_r := \frac{f_r}{\tau \cdot .707}$ Required size of fillet weld. Ref. 5, Chapter 7.

$\omega_r = 0.0016 \cdot in$ Calculated size of fillet weld required to carry the load.

$\omega_r < \omega = 1$ This weld is strong enough to carry the maximum load.

C. Verify the stresses in the plate do not exceed the allowables.

$M := L_{ps104} \cdot \sqrt{F_{ha}^2 + F_{hb}^2}$

$M = 87.5 \cdot ft \cdot lbf$

$h := .5 \cdot in$

$b := 3 \cdot in + 4 \cdot .5 \cdot in$ Effective width of plate, D + 4T.

$S := \frac{b \cdot h^2}{6}$

$\sigma := \frac{M}{S} + \frac{F_v}{A_{ps104}}$

$\sigma = 5118.71 \cdot psi$

The stress of 5,119 psi is less than the allowable stress of 17,800 psi. The plate thickness is acceptable.

5. Analyze the pipe support PS-109 (loads from Autopipe analysis W320H32A).

Pipe support PS-109 is a 3-1/2" x 3-1/2" x 1/4" angle welded to the shield wall.

The loads on the support are:

$F_{ha} := 0 \cdot lbf$ First horizontal load on support. Ref. 2.

$F_{hb} := 0 \cdot lbf$ Second horizontal load on support. Ref. 2.

$F_v := 17 \cdot lbf$ Vertical load on support. Ref. 2.

HNF-2486, Rev. 0
Page D-19

Distance from the load to the support is: $L_{ps109} := 1 \cdot ft$

The section modulus of the 3-1/2" x 3-1/2" x 1/4" angle is: $S_a := .794 \cdot in^3$ Ref. 4

A. Verify that the angle is adequate to carry the load.

The angle can be analyzed as a cantilever with a concentrated load at any point.

Client WHC
Subject Process Building Duct Support Stress Analysis
Location: Tank 241-C-106

WO/Job No. ER4319/W320
Date 3/1/95 By Rodney C. Campbell
Checked 3/1/95 By N. JUPLO
Revised By

$M := F_v \cdot L_{ps109}$ $\quad M = 204 \cdot lbf \cdot in$

$f_b := \frac{M}{S_a}$

$f_b = 256.93 \cdot psi$ Calculated bending stress

$f_b < F_{36} = 1$ The calculated bending stress is less than the allowable. The angle will not fail.

B. Verify that the weld on support PS-109 is adequate to carry the load.

Calculate the required size of the fillet weld holding the angle to the shielding wall.

The drawing shows a 3/16" fillet weld holding the angle to the shielding wall.

$\omega := .1875 \cdot in$ Size of fillet weld.

$l := 4 \cdot 3.5 \cdot in$ Length of weld. All around the angle.

$\tau := 9600 \cdot psi$ Allowable shear stress. Ref. 5, Chapter 7, Table 6.

$b := 3 \cdot in$ Horizontal length of weld on angle.

$d := 3.5 \cdot in$ Vertical length of weld on angle.

$f_t := \frac{F_v}{l}$ $\quad f_t = 1.21 \cdot \frac{lbf}{in}$ Shear load on weld.

$S_w := \frac{d^2 \cdot (4 \cdot b + d)}{6 \cdot (2 \cdot b + d)}$ Ref. 5, Table 5.

$f_b := \frac{M}{S_w}$ $\quad f_b = 61.24 \cdot \frac{lbf}{in}$ Bending load on weld.

$f_r := \sqrt{f_t^2 + f_b^2}$ $\quad f_r = 61.25 \cdot \frac{lbf}{in}$ Resultant load on weld.

$\omega_r := \frac{f_r}{\tau \cdot .707}$ Required fillet weld. Ref. 5, Chapter 7.

$\omega_r = 0.009 \cdot in$ Calculated fillet weld required to carry the load.

$\omega_r < \omega = 1$ This weld is strong enough to carry the maximum load.

CONCLUSIONS:

The Process Building HVAC duct supports are adequate as designed to carry the loads calculated to be imposed upon them.

APPENDIX A

D I S P L A C E M E N T S

Point name	Load combination	TRANSLATIONS (in) X	Y	Z	ROTATIONS (deg) X	Y	Z
G05	GR	0.000	0.000	0.000	-0.001	-0.001	0.001
	T1	0.000	0.007	0.012	-0.004	-0.012	-0.014
	E1	0.000	0.000	0.000	0.000	0.000	-0.002
	E2	0.000	0.000	0.000	0.002	-0.001	0.001
	GR+T1	0.000	0.007	0.012	-0.005	-0.013	-0.013
	SEIS	0.000	0.000	0.000	0.002	0.001	0.003
	GR+T1+SEIS	0.001	0.007	0.012	0.007	0.014	0.016
G06 N	GR	0.000	0.000	0.000	-0.001	-0.001	0.001
	T1	0.000	0.007	0.012	-0.004	-0.012	-0.014
	E1	0.000	0.000	0.000	0.000	0.000	-0.002
	E2	0.000	0.000	0.000	0.002	-0.001	0.001
	GR+T1	0.000	0.007	0.012	-0.005	-0.013	-0.013
	SEIS	0.000	0.000	0.000	0.002	0.001	0.003
	GR+T1+SEIS	0.001	0.007	0.012	0.007	0.014	0.016
G06 F	GR	0.000	0.000	0.000	0.000	0.000	0.000
	T1	0.000	0.000	0.005	0.000	-0.001	-0.001
	E1	0.000	0.000	0.000	0.000	0.000	0.000
	E2	0.000	0.000	0.000	0.000	0.000	0.000
	GR+T1	0.000	0.000	0.005	0.000	-0.001	-0.001
	SEIS	0.000	0.000	0.000	0.000	0.000	0.000
	GR+T1+SEIS	0.000	0.000	0.005	0.000	0.001	0.001
G07	GR	0.000	0.000	0.000	0.000	0.000	0.000
	T1	0.000	0.000	0.003	0.000	0.000	0.000
	E1	0.000	0.000	0.000	0.000	0.000	0.000
	E2	0.000	0.000	0.000	0.000	0.000	0.000
	GR+T1	0.000	0.000	0.003	0.000	0.000	0.000
	SEIS	0.000	0.000	0.000	0.000	0.000	0.000
	GR+T1+SEIS	0.000	0.000	0.003	0.000	0.000	0.000
G08	GR	0.000	0.000	0.000	0.000	0.000	0.000
	T1	0.000	0.000	0.000	0.000	0.000	0.000
	E1	0.000	0.000	0.000	0.000	0.000	0.000
	E2	0.000	0.000	0.000	0.000	0.000	0.000
	GR+T1	0.000	0.000	0.000	0.000	0.000	0.000
	SEIS	0.000	0.000	0.000	0.000	0.000	0.000
	GR+T1+SEIS	0.000	0.000	0.000	0.000	0.000	0.000

*** Segment G end ***

S U P P O R T F O R C E S

Point/ Supp. ID	Connect/ Type	Load Combination	LOCAL Dirn	Force	Deform	GLOBAL Dirn	Force	Deform
A03 M		GR	down	316	0.000	X		0.000
A03 M1	Y - Stop		+Z		0.000	Y	-316	0.000
Stiff	:RIGID		-X		0.000	Z		0.000
PS-101								
		T1	up	1625	0.000	X		-0.011
			+Z		0.000	Y	1625	0.000
			-X		0.011	Z		0.000
		E1	down	1	0.000	X		0.000
			+Z		0.000	Y	-1	0.000
			+X		0.000	Z		0.000
		E2	down	1	0.000	X		0.000
			+Z		0.000	Y	-1	0.000
			+X		0.000	Z		0.000
		GR+T1	up	1309	0.000	X		-0.011
			+Z		0.000	Y	1309	0.000
			-X		0.011	Z		0.000
		SEIS	down	2	0.000	X		0.000
			-Z		0.000	Y	2	0.000
			-X		0.000	Z		0.000
		GR+T1+SEIS	down	1311	0.000	X		0.011
			-Z		0.000	Y	1311	0.000
			-X		0.011	Z		0.000
B05		GR	down	214	0.000	X		0.000
B05 1	Y - Stop		-Z		0.000	Y	-214	0.000
Stiff	:RIGID		-X		0.000	Z		0.000
PS-103								
		T1	up	214	0.015	X		-0.046
			+Z		0.059	Y	214	0.015
			-X		0.046	Z		0.059
		E1	up	9	0.000	X		0.001
			-Z		0.001	Y	9	0.000
			+X		0.001	Z		-0.001
		E2	down	1	0.000	X		0.000
			+Z		0.001	Y	-1	0.000
			-X		0.000	Z		0.001
		GR+T1	up		0.015	X		-0.047
			+Z		0.059	Y		0.015
			-X		0.047	Z		0.059

SUPPORT FORCES

Point/ Supp. ID	Connect/ Type	Load Combination	LOCAL Dirn	LOCAL Force	LOCAL Deform	GLOBAL Dirn	GLOBAL Force	GLOBAL Deform
		SEIS	down	10	0.000	X		0.001
			-Z		0.001	Y	10	0.000
			-X		0.001	Z		0.001
		GR+T1+SEIS	down	10	0.015	X		0.048
			-Z		0.060	Y	10	0.015
			-X		0.048	Z		0.060
B12		GR	down	255	0.000	X		0.000
B12 1 Y - Stop			-Z		0.001	Y	-255	0.000
Stiff :RIGID			+X		0.000	Z		-0.001
PS-103		T1	down	35	0.000	X	51	0.007
			-Z	54	0.008	Y	-35	0.000
			+X	51	0.007	Z	-54	-0.008
		E1	down	4	0.000	X		0.000
			-Z		0.001	Y	-4	0.000
			+X		0.000	Z		-0.001
		E2	down	0	0.000	X		0.000
			+Z		0.002	Y	0	0.000
			-X		0.000	Z		0.002
		GR+T1	down	291	0.000	X	51	0.008
			-Z	54	0.009	Y	-291	0.000
			+X	51	0.008	Z	-54	-0.009
		SEIS	down	4	0.000	X		0.000
			-Z		0.003	Y	4	0.000
			-X		0.000	Z		0.003
		GR+T1+SEIS	down	294	0.000	X	51	0.008
			-Z	54	0.012	Y	294	0.000
			-X	51	0.008	Z	54	0.012
D02		GR	down	145	0.000	X		0.000
D02 1 Y - Stop			-Z		0.000	Y	-145	0.000
Stiff :RIGID			-X		0.000	Z		0.000
PS-102		T1	up	145	0.040	X		0.004
			-Z		0.032	Y	145	0.040
			+X		0.004	Z		-0.032
		E1	down	2	0.000	X		0.000
			-Z		0.000	Y	-2	0.000
			+X		0.000	Z		0.000
		E2	up	21	0.000	X		0.000

SUPPORT FORCES

Point/ Supp. ID	Connect/ Type	Load Combination	LOCAL Dirn	LOCAL Force	LOCAL Deform	GLOBAL Dirn	GLOBAL Force	GLOBAL Deform
			+Z		0.000	Y	21	0.000
			+X		0.000	Z		0.000
		GR+T1	up		0.040	X		0.004
			-Z		0.032	Y		0.040
			+X		0.004	Z		-0.032
		SEIS	down	23	0.000	X		0.000
			-Z		0.000	Y	23	0.000
			-X		0.000	Z		0.000
		GR+T1+SEIS	down	23	0.040	X		0.004
			-Z		0.033	Y	23	0.040
			-X		0.004	Z		0.033
F06		GR	down	303	0.000	X		-0.001
F06 1 Y - Stop			-Z		0.000	Y	-303	0.000
Stiff :RIGID			-X		0.001	Z		0.000
PS-109		T1	up	303	0.004	X		0.044
			-Z		0.007	Y	303	0.004
			+X		0.044	Z		-0.007
		E1	down	13	0.000	X		0.003
			+Z		0.000	Y	-13	0.000
			+X		0.003	Z		0.000
		E2	down	4	0.000	X		0.000
			+Z		0.000	Y	-4	0.000
			-X		0.000	Z		0.000
		GR+T1	up		0.004	X		0.044
			-Z		0.007	Y		0.004
			+X		0.044	Z		-0.007
		SEIS	down	17	0.000	X		0.003
			-Z		0.000	Y	17	0.000
			-X		0.003	Z		0.000
		GR+T1+SEIS	down	17	0.004	X		0.047
			-Z		0.007	Y	17	0.004
			-X		0.047	Z		0.007
G02		GR	down	224	0.000	X		-0.001
G02 1 Y - Stop			-Z		0.001	Y	-224	0.000
Stiff :RIGID			-X		0.001	Z		-0.001
PS-103		T1	down	310	0.000	X	97	0.022
			+Z	65	0.015	Y	-310	0.000

SUPPORT FORCES

Point/ Supp. ID	Connect/ Type	Load Combination	LOCAL Dirn	LOCAL Force	LOCAL Deform	GLOBAL Dirn	GLOBAL Force	GLOBAL Deform
			+X	97	0.022	Z	65	0.015
		E1	down	7	0.000	X		0.001
			+Z		0.000	Y	-7	0.000
			+X		0.001	Z		0.000
		E2	up	3	0.000	X		0.000
			+Z		0.001	Y	3	0.000
			-X		0.000	Z		0.001
		GR+T1	down	534	0.000	X	97	0.021
			+Z	65	0.014	Y	-534	0.000
			+X	97	0.021	Z	65	0.014
		SEIS	down	10	0.000	X		0.002
			-Z		0.001	Y	10	0.000
			-X		0.002	Z		0.001
		GR+T1+SEIS	down	544	0.000	X	97	0.023
			-Z	65	0.015	Y	544	0.000
			-X	97	0.023	Z	65	0.015

RESTRAINT REACTIONS

Point name	Load combination	FORCES (lb) X	Y	Z	Result	MOMENTS (ft-lb) X	Y	Z	Result
A00	Anchor								
	GR	-44	-18	-13	49	17	21	88	92
	T1	-21549	-29	-227	21550	-349	-489	42625	42629
	E1	49	0	15	51	31	1	-67	73
	E2	3	0	50	50	66	-15	-6	68
	GR+T1	-21593	-46	-240	21594	-331	-469	42713	42716
	SEIS	52	0	65	83	97	16	73	122
	GR+T1+SEIS	21645	46	305	21647	428	485	42785	42790
A03 M	Y - Stop								
PS-101	GR	0	-316	0	316	0	0	0	0
	T1	0	1625	0	1625	0	0	0	0
	E1	0	-1	0	1	0	0	0	0
	E2	0	-1	0	1	0	0	0	0
	GR+T1	0	1309	0	1309	0	0	0	0
	SEIS	0	2	0	2	0	0	0	0
	GR+T1+SEIS	0	1311	0	1311	0	0	0	0
A08	Anchor								
	GR	32	-113	9	118	18	-2	-2	18
	T1	19584	-1530	63	19644	221	-129	-12009	12012
	E1	17	0	-15	23	-8	-5	-8	12
	E2	0	2	22	22	11	7	-1	13
	GR+T1	19617	-1643	72	19686	239	-131	-12012	12015
	SEIS	17	2	37	41	19	12	9	24
	GR+T1+SEIS	19634	1645	109	19703	257	143	12020	12024
B05	Y - Stop								
PS-103	GR	0	-214	0	214	0	0	0	0
	T1	0	214	0	214	0	0	0	0
	E1	0	9	0	9	0	0	0	0
	E2	0	-1	0	1	0	0	0	0
	GR+T1	0	0	0	0	0	0	0	0
	SEIS	0	10	0	10	0	0	0	0
	GR+T1+SEIS	0	10	0	10	0	0	0	0
B12	Y - Stop								
PS-103	GR	0	-255	0	255	0	0	0	0
	T1	51	-35	-54	83	0	0	0	0
	E1	0	-4	0	4	0	0	0	0
	E2	0	0	0	0	0	0	0	0
	GR+T1	51	-291	-54	300	0	0	0	0
	SEIS	0	4	0	4	0	0	0	0
	GR+T1+SEIS	51	294	54	304	0	0	0	0

RESTRAINT REACTIONS

Point name	Load combination	FORCES (lb) X	Y	Z	Result	MOMENTS (ft-lb) X	Y	Z	Result
B16	Anchor								
	GR	-2	1	-1	2	26	13	91	96
	T1	93	27	-26	100	-10	507	-9	507
	E1	31	7	-2	32	-7	39	-14	42
	E2	-1	0	12	12	0	-12	0	12
	GR+T1	91	27	-27	99	16	520	83	526
	SEIS	32	7	14	36	7	51	14	53
	GR+T1+SEIS	123	35	41	134	23	571	97	579
C12	Anchor								
	GR	15	-224	14	225	-243	-14	24	245
	T1	1474	-839	937	1938	-562	-1137	-1306	1821
	E1	61	-4	-10	62	-12	-75	-61	97
	E2	8	-26	73	78	54	15	-9	56
	GR+T1	1489	-1064	951	2062	-806	-1152	-1281	1902
	SEIS	70	30	83	112	66	90	70	131
	GR+T1+SEIS	1559	1094	1034	2167	871	1242	1352	2032
D02	Y - Stop								
PS-102	GR	0	-145	0	145	0	0	0	0
	T1	0	145	0	145	0	0	0	0
	E1	0	-2	[illegible]	2	0	0	0	0
	E2	0	21	[illegible]	21	0	0	0	0
	GR+T1	0	0	0	0	0	0	0	0
	SEIS	0	23	0	23	0	0	0	0
	GR+T1+SEIS	0	23	0	23	0	0	0	0
D07	Anchor								
	GR	0	-127	-1	127	22	-1	1	22
	T1	45	144	-101	182	-547	116	-42	560
	E1	24	0	0	24	0	16	-18	24
	E2	0	-2	14	14	7	0	0	7
	GR+T1	45	16	-102	113	-525	114	-41	539
	SEIS	24	2	14	28	7	17	18	26
	GR+T1+SEIS	69	19	116	136	532	131	59	551
F06	Y - Stop								
PS-109	GR	0	-303	0	303	0	0	0	0
	T1	0	303	0	303	0	0	0	0
	E1	0	-13	0	13	0	0	0	0
	E2	0	-4	0	4	0	0	0	0
	GR+T1	0	0	0	0	0	0	0	0
	SEIS	0	17	0	17	0	0	0	0
	GR+T1+SEIS	0	17	0	17	0	0	0	0

RESTRAINT REACTIONS

Point name	Load combination	FORCES (lb) X	Y	Z	Result	MOMENTS (ft-lb) X	Y	Z	Result
F10	Anchor								
	GR	-1	56	-9	57	33	4	4	33
	T1	49	315	-839	897	968	1128	694	1640
	E1	10	13	4	17	-2	-22	2	22
	E2	0	8	35	36	-29	-42	8	52
	GR+T1	48	371	-848	927	1001	1132	698	1665
	SEIS	10	21	39	45	31	64	10	71
	GR+T1+SEIS	58	392	887	971	1032	1195	708	1731
G02	Y - Stop								
PS-103	GR	0	-224	0	224	0	0	0	0
	T1	97	-310	65	332	0	0	0	0
	E1	0	-7	0	7	0	0	0	0
	E2	0	3	0	3	0	0	0	0
	GR+T1	97	-534	65	547	0	0	0	0
	SEIS	0	10	0	10	0	0	0	0
	GR+T1+SEIS	97	544	65	556	0	0	0	0
G08	Anchor								
	GR	0	-129	1	129	27	-2	30	40
	T1	155	-29	181	240	7	-445	-602	749
	E1	50	1	8	50	7	7	-64	64
	E2	-11	0	36	37	27	-16	19	36
	GR+T1	154	-157	182	286	34	-447	-572	727
	SEIS	61	1	44	75	34	23	82	92
	GR+T1+SEIS	215	158	226	350	67	470	655	809

S U P P O R T F O R C E S

Point/ Supp. ID	Connect/ Type	Load Combination	LOCAL Dirn	LOCAL Force	LOCAL Deform	GLOBAL Dirn	GLOBAL Force	GLOBAL Deform
A10		GR	down	159	0.000	X		0.000
A10 1	Y - Stop		-Z		0.000	Y	-159	0.000
Stiff	:RIGID		-X		0.000	Z		0.000
PS-104		T1	up	0	0.000	X	0	-0.001
			-Z	25	0.073	Y	0	0.000
			-X	0	0.001	Z	-25	-0.073
		E1	down	0	0.000	X		0.000
			-Z		0.000	Y	0	0.000
			+X		0.000	Z		0.000
		E2	down	0	0.000	X		0.000
			+Z		0.000	Y	0	0.000
			-X		0.000	Z		0.000
		SEIS	down	0	0.000	X		0.000
			-Z		0.000	Y	0	0.000
			-X		0.000	Z		0.000
		GR+T1	down	159	0.000	X	0	-0.001
			-Z	25	0.073	Y	-159	0.000
			-X	0	0.001	Z	-25	-0.073
		GR+T1+SEIS	down	159	0.000	X	0	0.001
			-Z	25	0.073	Y	159	0.000
			-X	0	0.001	Z	25	0.073
B02		GR	down	83	0.000	X		0.000
B02 1	Y - Stop		+Z		0.000	Y	-83	0.000
Stiff	:RIGID		+X		0.000	Z		0.000
PS-104		T1	up	83	0.016	X		0.059
			+Z		0.041	Y	83	0.016
			+X		0.059	Z		0.041
		E1	down	0	0.000	X		0.000
			+Z		0.000	Y	0	0.000
			+X		0.000	Z		0.000
		E2	down	4	0.000	X		0.000
			+Z		0.000	Y	-4	0.000
			-X		0.000	Z		0.000
		SEIS	down	4	0.000	X		0.000
			-Z		0.000	Y	4	0.000
			-X		0.000	Z		0.000

S U P P O R T F O R C E S

Point/ Supp. ID	Connect/ Type	Load Combination	LOCAL Dirn	LOCAL Force	LOCAL Deform	GLOBAL Dirn	GLOBAL Force	GLOBAL Deform
		GR+T1	up		0.016	X		0.059
			+Z		0.041	Y		0.016
			+X		0.059	Z		0.041
		GR+T1+SEIS	down	4	0.016	X		0.060
			-Z		0.041	Y	4	0.016
			-X		0.060	Z		0.041

R E S T R A I N T R E A C T I O N S

Point name	Load combination	FORCES (lb) X	Y	Z	Result	MOMENTS (ft-lb) X	Y	Z	Result
A00	Anchor								
	GR	0	-131	0	131	92	0	-10	92
	T1	18473	-28	-32478	37364	109	27418	-22	27418
	E1	12	-2	8	14	3	11	-12	17
	E2	-1	5	32	33	2	-1	-1	2
	SEIS	13	8	40	43	4	13	12	18
	GR+T1	18473	-159	-32478	37364	201	27418	-32	27419
	GR+T1+SEIS	18486	167	32518	37406	205	27431	45	27432
A05	Anchor								
	GR	0	-227	0	227	-4	0	-252	252
	T1	408363	-56	32487	409653	-15	-64446	-125	64446
	E1	41	2	-8	42	3	12	2	13
	E2	1	-2	21	21	0	-16	-4	16
	SEIS	42	4	29	51	3	28	6	29
	GR+T1	408363	-282	32487	409653	-19	-64446	-377	64447
	GR+T1+SEIS	408405	287	32515	409698	22	64474	383	64475
A06	Anchor								
	GR	0	-261	0	261	-24	0	333	334
	T1	-425388	0	100	425388	0	-1469	0	1469
	E1	32	0	0	32	0	-3	0	3
	E2	4	0	51	51	0	83	0	83
	SEIS	36	0	51	63	0	86	0	86
	GR+T1	-425388	-261	100	425388	-24	-1469	332	1506
	GR+T1+SEIS	425424	261	151	425424	24	1555	332	1591
A10	Y - Stop								
PS-104	GR	0	-159	0	159	0	0	0	0
	T1	0	0	-25	25	0	0	0	0
	E1	0	0	0	0	0	0	0	0
	E2	0	0	0	0	0	0	0	0
	SEIS	0	0	0	0	0	0	0	0
	GR+T1	0	-159	-25	161	0	0	0	0
	GR+T1+SEIS	0	159	25	161	0	0	0	0
A12	Anchor								
	GR	0	-64	0	64	67	0	21	70
	T1	-1447	0	-83	1450	0	-6647	0	6647
	E1	26	0	0	26	0	22	0	22
	E2	-4	0	7	8	0	-10	0	10
	SEIS	30	0	7	31	0	32	0	32
	GR+T1	-1447	-64	-83	1451	67	-6647	21	6648
	GR+T1+SEIS	1477	64	90	1481	67	6680	21	6680

R E S T R A I N T R E A C T I O N S

Point name	Load combination	FORCES (lb) X	Y	Z	Result	MOMENTS (ft-lb) X	Y	Z	Result
B02	Y - Stop								
PS-104	GR	0	-83	0	83	0	0	0	0
	T1	0	83	0	83	0	0	0	0
	E1	0	0	0	0	0	0	0	0
	E2	0	-4	0	4	0	0	0	0
	SEIS	0	4	0	4	0	0	0	0
	GR+T1	0	0	0	0	0	0	0	0
	GR+T1+SEIS	0	4	0	4	0	0	0	0

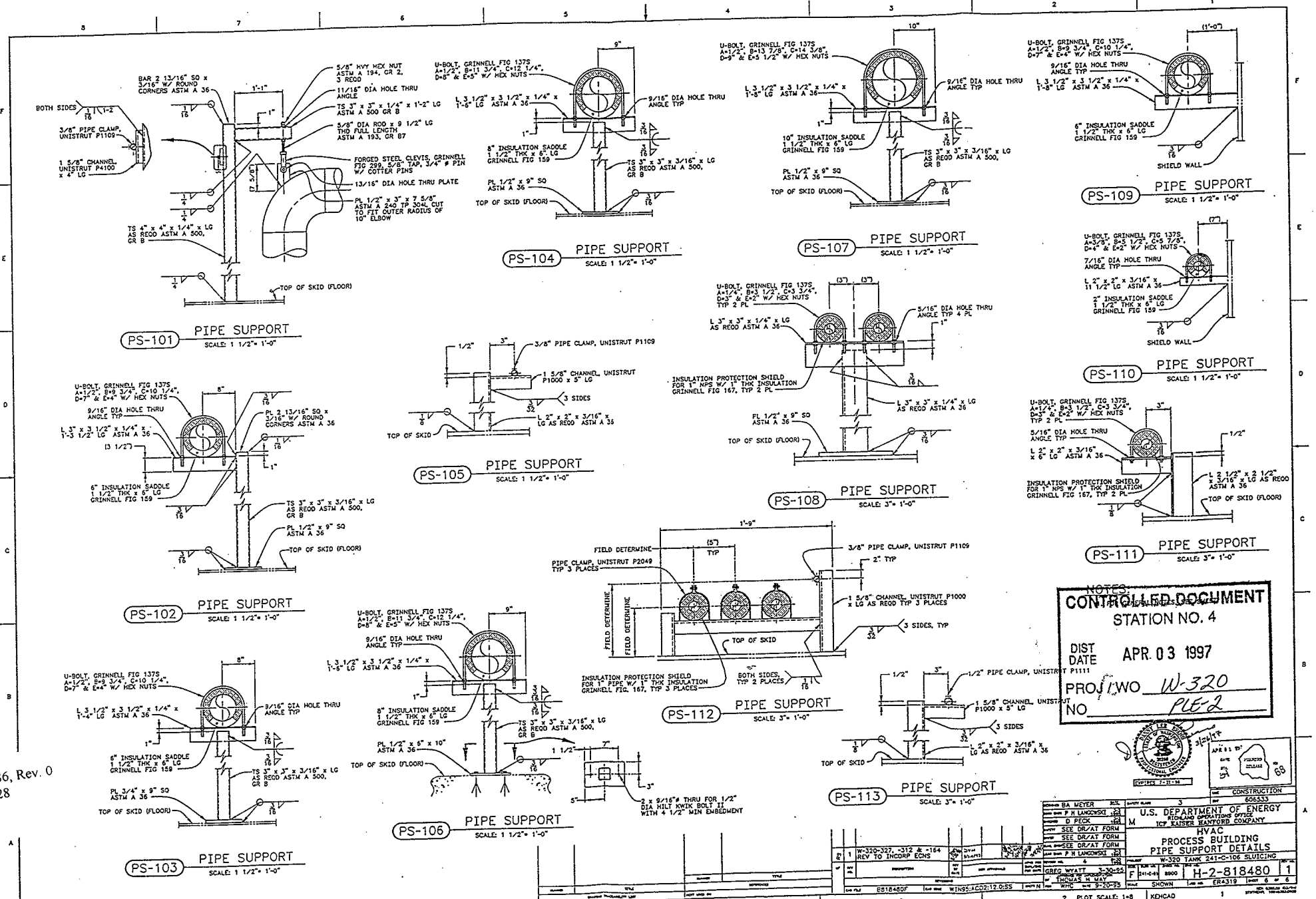
PS-101 PIPE SUPPORT SCALE: 1 1/2"= 1'-0"
BAR 2 13/16" SQ x 3/16" W/ ROUND CORNERS ASTM A 36
BOTH SIDES
3/8" PIPE CLAMP, UNISTRUT P1109
1 5/8" CHANNEL, UNISTRUT P4100 x 4" LG
5/8" HVY HEX NUT ASTM A 194, GR 2, 3 REQD
11/16" DIA HOLE THRU ANGLE
TS 3" x 3" x 1/4" x 1'-2" LG ASTM A 500 GR B
5/8" DIA ROD x 9 1/2" LG THD FULL LENGTH ASTM A 193, GR B7
FORGED STEEL CLEVIS, GRINNELL FIG 299, 5/8" TAP, 3/4" ø PIN W/ COTTER PINS
13/16" DIA HOLE THRU PLATE
PL 1/2" x 3" x 7 5/8" ASTM A 240 TP 304L CUT TO FIT OUTER RADIUS OF 10" ELBOW
TS 4" x 4" x 1/4" x LG AS REQD ASTM A 500, GR B
TOP OF SKID (FLOOR)
PS-102 PIPE SUPPORT SCALE: 1 1/2"= 1'-0"
U-BOLT, GRINNELL FIG 137S A=1/2", B=9 3/4", C=10 1/4", D=7" & E=4" W/ HEX NUTS
9/16" DIA HOLE THRU ANGLE TYP
L 3 1/2" x 3 1/2" x 1/4" x 1'-3 1/2" LG ASTM A 36
6" INSULATION SADDLE 1 1/2" THK x 6" LG GRINNELL FIG 159
PL 2 13/16" SQ x 3/16" W/ ROUND CORNERS ASTM A 36
TS 3" x 3" x 3/16" x LG AS REQD ASTM A 500, GR B
PL 1/2" x 9" SQ ASTM A 36
TOP OF SKID (FLOOR)
PS-103 PIPE SUPPORT SCALE: 1 1/2"= 1'-0"
U-BOLT, GRINNELL FIG 137S A=1/2", B=9 3/4", C=10 1/4", D=7" & E=4" W/ HEX NUTS
9/16" DIA HOLE THRU ANGLE TYP
L 3 1/2" x 3 1/2" x 1/4" x 1'-4" LG ASTM A 36
6" INSULATION SADDLE 1 1/2" THK x 6" LG GRINNELL FIG 159
TS 3" x 3" x 3/16" x LG AS REQD ASTM A 500, GR B
PL 3/4" x 9" SQ ASTM A 36
TOP OF SKID (FLOOR)
PS-104 PIPE SUPPORT SCALE: 1 1/2"= 1'-0"
U-BOLT, GRINNELL FIG 137S A=1/2", B=11 3/4", C=12 1/4", D=8" & E=5" W/ HEX NUTS
L 3 1/2" x 3 1/2" x 1/4" x 1'-6" LG ASTM A 36
9/16" DIA HOLE THRU ANGLE TYP
8" INSULATION SADDLE 1 1/2" THK x 6" LG GRINNELL FIG 159
TS 3" x 3" x 3/16" x LG AS REQD ASTM A 500, GR B
PL 1/2" x 9" SQ ASTM A 36
TOP OF SKID (FLOOR)
PS-105 PIPE SUPPORT SCALE: 1 1/2"= 1'-0"
3/8" PIPE CLAMP, UNISTRUT P1109
1 5/8" CHANNEL, UNISTRUT P1000 x 5" LG
3 SIDES
L 2" x 2" x 3/16" x LG AS REQD ASTM A 36
TOP OF SKID
PS-106 PIPE SUPPORT SCALE: 1 1/2"= 1'-0"
U-BOLT, GRINNELL FIG 137S A=1/2", B=11 3/4", C=12 1/4", D=8" & E=5" W/ HEX NUTS
9/16" DIA HOLE THRU ANGLE TYP
L 3 1/2" x 3 1/2" x 1/4" x 1'-6" LG ASTM A 36
8" INSULATION SADDLE 1 1/2" THK x 6" LG GRINNELL FIG 159
TS 3" x 3" x 3/16" x LG AS REQD ASTM A 500, GR B
PL 1/2" x 6" x 10" ASTM A 36
TOP OF SKID (FLOOR)
2 x 9/16"ø THRU FOR 1/2" DIA HILT KWIK BOLT II WITH 4 1/2" MIN EMBEDMENT
PS-107 PIPE SUPPORT SCALE: 1 1/2"= 1'-0"
U-BOLT, GRINNELL FIG 137S A=1/2", B=13 7/8", C=14 3/8", D=9" & E=5 1/2" W/ HEX NUTS
L 3 1/2" x 3 1/2" x 1/4" x 1'-8" LG ASTM A 36
9/16" DIA HOLE THRU ANGLE TYP
10" INSULATION SADDLE 1 1/2" THK x 6" LG GRINNELL FIG 159
TS 3" x 3" x 3/16" x LG AS REQD ASTM A 500, GR B
PL 1/2" x 9" SQ ASTM A 36
TOP OF SKID (FLOOR)
PS-108 PIPE SUPPORT SCALE: 3"= 1'-0"
U-BOLT, GRINNELL FIG 137S A=1/4", B=3 1/2", C=3 3/4", D=3" & E=2" W/ HEX NUTS TYP 2 PL
L 3" x 3" x 1/4" x LG AS REQD ASTM A 36
5/16" DIA HOLE THRU ANGLE TYP 4 PL
INSULATION PROTECTION SHIELD FOR 1" NPS W/ 1" THK INSULATION GRINNELL FIG 167, TYP 2 PL
L 3" x 3" x 1/4" x LG AS REQD ASTM A 36
PL 1/2" x 9" SQ ASTM A 36
TOP OF SKID (FLOOR)
PS-109 PIPE SUPPORT SCALE: 1 1/2"= 1'-0"
U-BOLT, GRINNELL FIG 137S A=1/2", B=9 3/4", C=10 1/4", D=7" & E=4" W/ HEX NUTS
9/16" DIA HOLE THRU ANGLE TYP
L 3 1/2" x 3 1/2" x 1/4" x 1'-8" LG ASTM A 36
6" INSULATION SADDLE 1 1/2" THK x 6" LG GRINNELL FIG 159
SHIELD WALL
PS-110 PIPE SUPPORT SCALE: 1 1/2"= 1'-0"
U-BOLT, GRINNELL FIG 137S A=3/8", B=5 1/2", C=5 7/8", D=4" & E=2" W/ HEX NUTS
7/16" DIA HOLE THRU ANGLE TYP
L 2" x 2" x 3/16" x 11 1/2" LG ASTM A 36
2" INSULATION SADDLE 1 1/2" THK x 6" LG GRINNELL FIG 159
SHIELD WALL
PS-111 PIPE SUPPORT SCALE: 3"= 1'-0"
U-BOLT, GRINNELL FIG 137S A=1/4", B=3 1/2", C=3 3/4", D=3" & E=2" W/ HEX NUTS TYP 2 PL
5/16" DIA HOLE THRU ANGLE TYP
L 2" x 2" x 3/16" x 6" LG ASTM A 36
INSULATION PROTECTION SHIELD FOR 1" NPS W/ 1" THK INSULATION GRINNELL FIG 167, TYP 2 PL
L 2 1/2" x 2 1/2" x 3/16" x LG AS REQD ASTM A 36
TOP OF SKID (FLOOR)
PS-112 PIPE SUPPORT SCALE: 3"= 1'-0"
FIELD DETERMINE
PIPE CLAMP, UNISTRUT P2049 TYP 3 PLACES
3/8" PIPE CLAMP, UNISTRUT P1109
1 5/8" CHANNEL, UNISTRUT P1000 x LG AS REQD TYP 3 PLACES
3 SIDES, TYP
TOP OF SKID
INSULATION PROTECTION SHIELD FOR 1" PIPE W/ 1" THK INSULATION GRINNELL FIG. 167, TYP 3 PLACES
BOTH SIDES, TYP 2 PLACES
PS-113 PIPE SUPPORT SCALE: 3"= 1'-0"
1/2" PIPE CLAMP, UNISTRUT P1111
1 5/8" CHANNEL, UNISTRUT P1000 x 5" LG
3 SIDES
L 2" x 2" x 3/16" x LG AS REQD ASTM A 36
TOP OF SKID
NOTES:
CONTROLLED DOCUMENT
STATION NO. 4
DIST DATE APR. 03 1997
PROJ/WO W-320
NO PLE-2
CONSTRUCTION
606533
U.S. DEPARTMENT OF ENERGY
RICHLAND OPERATIONS OFFICE
ICF KAISER HANFORD COMPANY
HVAC
PROCESS BUILDING
PIPE SUPPORT DETAILS
W-320 TANK 241-C-106 SLUICING
H-2-818480
1
W-320-327, -312 & -164 REV TO INCORP ECNS
BA MEYER
P H LANGOWSKI
D PECK
SEE DR/AT FORM
GREG WYATT
THOMAS H MAY
WHC
9-20-95
SHOWN
ER4319
KEHCAD
PLOT SCALE: 1=8

The American Society for Testing and Materials takes no position respecting the validity of any patent rights asserted in connection with any item mentioned in this standard. Users of this standard are expressly advised that determination of the validity of any such patent rights, and the risk of infringement of such rights, are entirely their own responsibility.

This standard is subject to revision at any time by the responsible technical committee and must be reviewed every five years and if not revised, either reapproved or withdrawn. Your comments are invited either for revision of this standard or for additional standards and should be addressed to ASTM Headquarters. Your comments will receive careful consideration at a meeting of the responsible technical committee, which you may attend. If you feel that your comments have not received a fair hearing you should make your views known to the ASTM Committee on Standards, 1916 Race St., Philadelphia, PA 19103.

the original number from the same lot, each of which shall conform to the requirement specified, or the tubing represented by the test is subject to rejection.

13.2 In case of failure on retest to meet the requirements of Sections 8 and 9, the manufacturer may elect to retreat, rework, or otherwise eliminate the condition responsible for failure to meet the specified requirements. Thereafter, the material remaining from the lot originally represented may be tested and shall comply with all requirements of this specification.

14. Test Methods

14.1 The tension specimens required by this specification shall conform to those described in the latest issue of Test Methods and Definitions A 370, Annex A 2 on Tubular Products.

14.2 The tension test specimen shall be taken longitudinally from a section of the finished tubing, at a location at least 90° from the weld in the case of welded tubing, and shall not be flattened between gage marks. If desired, the tension tests may be made on the full section of the tubing; otherwise, a longitudinal strip-test specimen as prescribed in Test Methods and Definitions A 370 Supplementary Requirements II shall be used. The specimens shall have all burrs removed and shall not contain surface imperfections which would interfere with proper determination of the tensile properties of the metal.

14.3 The yield strength corresponding to a permanent offset of 0.2 % of the gage length of the specimen or to a total extension of 0.5 % of the gage length under load shall be determined.

15. Inspection

15.1 All tubing shall be subject to an inspection at place of manufacture to assure conformance to the requirements of this specification.

15.2 All tubing shall be free from defects and shall have a workmanlike finish.

15.2.1 Surface imperfections shall be classed as defects when their depth reduces the remaining wall thickness to less than 90 % of the specified nominal wall. Defects having a depth not in excess of 33⅓ % of the wall thickness may be repaired by welding, subject to the following conditions:

15.2.1.1 The defect shall be completely removed by chipping or grinding to sound metal,

15.2.1.2 The repair weld shall be made using a low-hydrogen welding process, and

15.2.1.3 The projecting weld metal shall be removed to produce a workmanlike finish.

15.2.2 Surface imperfections such as handling marks, light die or roll marks, or shallow pits are not considered defects providing the imperfections are removable within the minimum wall permitted. The removal of such surface imperfections is not required. Welded tubing shall be free of protruding metal on the outside surface of the weld seam.

15.3 The ends of structural tubing, unless otherwise specified, shall be finished square cut and the burr held to a minimum. The burr can be removed on the outside diameter, inside diameter, or both, as a supplementary requirement. When burrs are to be removed, it shall be specified on the purchase order.

15.4 Upon request of the purchaser in the contract or order, a manufacturer's certification that the material was manufactured and tested in accordance with this specification together with a report of the chemical and tensile tests shall be furnished.

16. Rejection

16.1 Each length of tubing received from the manufacturer may be inspected by the purchaser and, if it does not meet the requirements of this specification based on the inspection and test method as outlined in the specification, the length may be rejected and the manufacturer shall be notified. Disposition of rejected tubing shall be a matter of agreement between the manufacturer and the purchaser.

16.2 Tubing found in fabrication or in installation to be unsuitable for the intended use, under the scope and requirements of this specification, may be set aside and the manufacturer notified. Such tubing shall be subject to mutual investigation as to the nature and severity of the deficiency and the forming or installation, or both, conditions involved. Disposition shall be a matter for agreement.

17. Product Marking

17.1 Except as noted in 17.2, each length of structural tubing shall be legibly marked to show the following information: manufacturer's name, brand, or trademark; the specification number; and grade letter.

17.2 For structural tubing having a largest dimension of 4 in. (101.6 mm) or less, the information listed in 17.1 may be marked on a tag securely attached to each bundle.

17.3 *Bar Coding*—In addition to the requirements in 17.1 and 17.2, bar coding is acceptable as a supplementary identification method. Bar coding should be consistent with the Automotive Industry Action Group (AIAG) standard prepared by the Primary Metals Subcommittee of the AIAG Bar Code Project Team.

18. Packing, Marking, and Loading

18.1 When specified in the order, contract, etc., packing, marking, and loading shall be in accordance with those procedures of Practices A 700.

19. Government Procurement

19.1 When specified in the contract, material shall be preserved, packaged and packed in accordance with the requirements of MIL-STD 163. The applicable levels shall be as specified in the contract. Marking for shipment of such materials shall be in accordance with Federal Std. No. 123 for civil agencies and MIL-STD 129 or Federal Std. No. 183 if continuous marking is required, for military agencies.

19.2 *Inspection*—Unless otherwise specified in the contract, the producer is responsible for the performance of all inspection and test requirements specified herein. Except as otherwise specified in the contract, the producer may use his own, or any other suitable facilities for performing the inspection and test requirements specified herein, unless otherwise disapproved by the purchaser in the contract or purchase order. The purchaser shall have the right to perform any of the inspections and tests set forth in this specification where deemed necessary to ensure that the material conforms to the prescribed requirements.

unsound material that is revealed during the entire flattening test shall be cause for rejection.

9.4 Surface imperfections not found in the test specimen before flattening, but revealed during the first step of the flattening test, shall be judged in accordance with Section 14.

9.5 When low *D*-to-*t* ratio tubulars are tested, because the strain imposed due to geometry is unreasonably high on the inside surface at the 6 and 12 o'clock locations, cracks at these locations shall not be cause for rejection if the *D*-to-*t* ratio is less than 10.

10. Permissible Variations in Dimensions

10.1 *Outside Dimensions:*

10.1.1 *Round Structural Tubing*—The outside diameter shall not vary more than ±0.5 % rounded to the nearest 0.005 in. (0.13 mm), of the nominal outside diameter size specified, for nominal outside diameters 1.900 in. (48.26 mm) and smaller, and plus and minus 0.75 % rounded to the nearest 0.005 in. of the nominal outside diameter for nominal outside diameters 2.00 in. (50.8 mm) and larger. The outside diameter measurements shall be made at positions at least 2 in. (50.8 mm) from either end of the tubing.

10.1.2 *Square and Rectangular Structural Tubing*—The specified dimensions, measured across the flats at positions at least 2 in. (50.8 mm) from either end of the tubing and including an allowance for convexity or concavity, shall not exceed the plus and minus tolerances shown in Table 3.

10.2 *Wall Thickness*—The minimum wall thickness at any point of measurement on the tubing shall be not more an 10 % less than the nominal wall thickness specified. The maximum wall thickness, excluding the weld seam of welded tubing, shall be not more than 10 % greater than the nominal wall thickness specified. The wall thickness on square and rectangular tubing is to be measured at the center of the flat.

10.3 *Length*—Structural tubing is normally produced in random mill lengths 5 ft (1.5 m) and over, in multiple lengths, and in specified mill lengths. Refer to Section 3. When specified mill lengths are ordered, the length tolerance shall be in accordance with Table 4.

10.4 *Straightness*—The permissible variation for straightness of structural tubing shall be ⅛ in. times the number of feet (10.4 mm times the number of metres) of total length divided by 5.

10.5 *Squareness of Sides*—For square or rectangular structural tubing, adjacent sides may deviate from 90° by a tolerance of ±2° max.

10.6 *Radius of Corners*—For square or rectangular structural tubing, the radius of any outside corner of the section shall not exceed three times the specified wall thickness.

10.7 *Twist*—The tolerances for twist or variation with respect to axial alignment of the section, for square and rectangular structural tubing, shall be as shown in Table 5. Twist is measured either by holding down one end of a square or rectangular tube on a flat surface plate with the bottom side of the tube parallel to the surface plate and noting the difference in height above the surface plate of the two corners at the opposite end of the bottom side of the tube or by measuring this difference on the heavier sections by a suitable measuring device. The difference in the height of the corners shall not exceed the values in Table 5. Twist measurements are not to be taken within 2 in. (50 mm) of either end of the product.

TABLE 3 Outside Dimension Tolerances for Square and Rectangular Structural Tubing

Outside Large Flat Dimension, in. (mm)	Large Flat Dimension Tolerance,[A] plus and minus, in. (mm)
2½ (63.5) or under	0.020 (0.51)
Over 2½ to 3½ (63.5 to 88.9), incl	0.025 (0.64)
Over 3½ to 5½ (88.9 to 139.7), incl	0.030 (0.76)
Over 5½ (139.7)	0.01 times large flat dimension

[A] Tolerances include allowance for convexity or concavity. For rectangular tubing having a ratio of outside large to small flat dimension less than 1.5, and for square tubing, the tolerance on small flat dimension shall be identical to the large flat dimension tolerance. For rectangular tubing having a ratio of outside large to small flat dimension in the range of 1.5 to 3.0 inclusive, the tolerance on small flat dimension shall be 1.5 times the large flat dimension tolerance. For rectangular tubing having a ratio of outside large to small flat dimension greater than 3.0, the tolerance on small flat dimension shall be 2.0 times the large flat dimension tolerance.

TABLE 4 Specified Mill Length Tolerances for Structural Tubing

	22 ft (6.7 m) and Under		Over 22 to 44 ft (6.7 to 13.4 m), incl	
	Over	Under	Over	Under
Length tolerance for specified mill length, in. (mm)	½ (12.7)	¼ (6.4)	¾ (19.0)	¼ (6.4)

11. Special Shape Structural Tubing

11.1 The dimensions and tolerances of special shape structural tubing are available by inquiry and negotiation with the manufacturer.

12. Number of Tests

12.1 One tension test as specified in Section 14 shall be made from a length of tubing representing each lot.

12.2 The flattening test, as specified in Section 9 shall be made on one length of round tubing from each lot.

12.3 The term "lot" applies to all tubes of the same nominal size and wall thickness which are produced from the same heat of steel.

13. Retests

13.1 If the results of the mechanical tests representing any lot do not conform to a requirement as specified in Sections 8 and 9, retests may be made on additional tubing of double

TABLE 5 Twist Tolerances for Square and Rectangular Structural Tubing

Specified Dimension of Longest Side, in. (mm)	Maximum Twist in the First 3 ft (1 m) and in each additional 3 ft	
	in.	mm
1½ (38.1) and under	0.050	1.39
Over 1½ to 2½ (38.1 to 63.5), incl	0.062	1.72
Over 2½ to 4 (63.5 to 101.6), incl	0.075	2.09
Over 4 to 6 (101.6 to 152.4), incl	0.087	2.42
Over 6 to 8 (152.4 to 203.2), incl	0.100	2.78
Over 8 (203)	0.112	3.11

TABLE 1 Chemical Requirements

Element	Composition, %			
	Grades A, B and D		Grade C	
	Heat Analysis	Product Analysis	Heat Analysis	Product Analysis
Carbon, max	0.26	0.30	0.23	0.27
Manganese, max	...	...	1.35	1.40
Phosphorus, max	0.035	0.045	0.035	0.045
Sulfur, max	0.035	0.045	0.035	0.045
Copper, when copper steel is specified, min	0.20	0.18	0.20	0.18

pouring of the heat. The chemical composition thus determined shall conform to the requirements specified in Table 1 for heat analysis.

7. Product Analysis

7.1 An analysis may be made by the purchaser from finished tubing manufactured in accordance with this specification, or an analysis may be made from flat-rolled stock from which the welded tubing is manufactured. When product analyses are made, two sample lengths from a lot of each 500 lengths or fraction thereof shall be selected. Methods and practices relating to chemical analysis shall be in accordance with Test Methods, Practices and Terminology A 751. The chemical composition thus determined shall conform to the requirements specified in Table 1 for product analysis.

7.2 In the event the chemical composition of one of the sample lengths does not conform to the requirements shown in Table 1 for product analysis, an analysis of two additional lengths selected from the same lot shall be made, each of which shall conform to the requirements shown in Table 1 for product analysis, or the lot is subject to rejection.

8. Tensile Requirements

8.1 The material, as represented by the test specimen, shall conform to the requirements as to tensile properties prescribed in Table 2.

9. Flattening Test

9.1 The flattening test shall be made on round structural tubing. A flattening test is not required for shaped structural tubing.

9.2 For welded round structural tubing, a specimen at least 4 in. (102 mm) in length shall be flattened cold between parallel plates in three steps, with the weld located at 90° from the line of direction of force. During the first step, which is a test for ductility of the weld, no cracks or breaks on the inside or outside surfaces shall occur until the distance between the plates is less than two thirds of the original outside diameter of the tubing. As a second step, the flattening shall be continued. During the second step, which is a test for ductility exclusive of the weld, no cracks or breaks on the inside or outside surfaces, except as provided for in 9.5, shall occur until the distance between the plates is less than one half of the original outside diameter of the tubing but is not less than five times the wall thickness of the tubing. During the third step, which is a test for soundness, the flattening shall be continued until the specimen breaks or the opposite walls of the tubing meet. Evidence of laminated or unsound material or of incomplete weld that is revealed during the entire flattening test shall be cause for rejection.

TABLE 2 Tensile Requirements

Round Structural Tubing	Grade A	Grade B	Grade C	Grade D
Tensile strength, min, psi (MPa)	45 000 (310)	58 000 (400)	62 000 (427)	58 000 (400)
Yield strength, min, psi (MPa)	33 000 (228)	42 000 (290)	46 000 (317)	36 000 (250)
Elongation in 2 in. (50.8 mm), min, %[A]	25[B]	23[C]	21[D]	23[C]

Shaped Structural Tubing	Grade A	Grade B	Grade C	Grade D
Tensile strength, min, psi (MPa)	45 000 (310)	58 000 (400)	62 000 (427)	58 000 (400)
Yield strength, min, psi (MPa)	39 000 (269)	46 000 (317)	50 000 (345)	36 000 (250)
Elongation in 2 in. (50.8 mm), min, %[A]	25[B]	23[C]	21[D]	23[C]

[A] The minimum elongation values specified apply only to testing performed prior to shipment because of the possibility of strain aging. Tests performed after shipment may show values below those stated.

[B] Applies to specified wall thicknesses 0.120 in. (3.05 mm) and over. For wall thicknesses under 0.120 in., the minimum elongation shall be calculated by the formula: percent elongation in 2 in. = $56t + 17.5$.

[C] Applies to specified wall thicknesses 0.180 in. (4.57 mm) and over. For wall thicknesses under 0.180 in., the minimum elongation shall be calculated by the formula: percent elongation in 2 in. = $61t + 12$.

[D] Applies to specified wall thicknesses 0.120 in. (3.05 mm) and over. For lighter wall thicknesses, elongation shall be by agreement with the manufacturer.

NOTE—The following table gives calculated minimum values for longitudinal strip tests:

Wall thickness, in. (mm)	Elongation in 2 in. (50.8 mm), min, %	
	Grade A	Grade B
0.180 (4.57)	...	23
0.165 (4.19)	...	22
0.148 (3.76)	...	21
0.134 (3.40)	...	20
0.120 (3.05)	25	19.5
0.109 (2.77)	23.5	19
0.095 (2.41)	23	18
0.083 (2.11)	22	17
0.065 (1.65)	21	16
0.049 (1.24)	20	15
0.035 (0.89)	19.5	14

9.3 For seamless round structural tubing 2⅜ in. (60.3 mm) outside diameter and larger, a section not less than 2½ in. (63.5 mm) in length shall be flattened cold between parallel plates in two steps. During the first step, which is a test for ductility no cracks or breaks on the inside or outside surfaces, except as provided for in 9.5, shall occur until the distance between the plates is less than the value of "H" calculated by the following equation:

$$H = (1 + e)t/(e + t/D)$$

where:

H = distance between flattening plates, in.,
e = deformation per unit length (constant for a given grade of steel, 0.09 for Grade A, 0.07 for Grade B, and 0.06 for Grade C),
t = nominal wall thickness of tubing, in., and
D = actual outside diameter of tubing, in.

During the second step, which is a test for soundness, the flattening shall be continued until the specimen breaks or the opposite walls of the tubing meet. Evidence of laminated or

Standard Specification for Cold-Formed Welded and Seamless Carbon Steel Structural Tubing in Rounds and Shapes[1]

This standard is issued under the fixed designation A 500; the number immediately following the designation indicates the year of original adoption or, in the case of revision, the year of last revision. A number in parentheses indicates the year of last reapproval. A superscript epsilon (ε) indicates an editorial change since the last revision or reapproval.

This specification has been approved for use by agencies of the Department of Defense. Consult the DoD Index of Specifications and Standards for the specific year of issue which has been adopted by the Department of Defense.

1. Scope

1.1 This specification covers cold-formed welded and seamless carbon steel round, square, rectangular, or special shape structural tubing for welded, riveted, or bolted construction of bridges and buildings, and for general structural purposes.

1.2 This tubing is produced in both welded and seamless sizes with a maximum periphery of 64 in. (1626 mm) and a maximum wall of 0.625 in. (15.88 mm). Grade D requires heat treatment.

NOTE 1—Products manufactured to this specification may not be suitable for those applications such as dynamically loaded elements in welded structures, etc., where low-temperature notch-toughness properties may be important.

1.3 The values stated in inch-pound units are to be regarded as the standard.

2. Referenced Documents

2.1 *ASTM Standards:*

A 370 Test Methods and Definitions for Mechanical Testing of Steel Products[2]

A 700 Practices for Packaging, Marking, and Loading Methods for Steel Products for Domestic Shipment[3]

A 751 Test Methods, Practices, and Terminology for Chemical Analysis of Steel Products[2]

2.2 *Military Standards:*

MIL-STD-129 Marking for Shipment and Storage[4]

MIL-STD-163 Steel Mill Products, Preparation for Shipment and Storage[4]

2.3 *Federal Standards:*

Fed. Std. No. 123 Marking for Shipment[4]

Fed. Std. No. 183 Continuous Identification Marking of Iron and Steel Products[4]

3. Ordering Information

3.1 Orders for material under this specification should include the following, as required, to describe the desired material adequately.

3.1.1 Quantity (feet or number of lengths),

3.1.2 Name of material (cold-formed tubing),

3.1.3 Method of manufacture (seamless or welded),

3.1.4 Grade (Table 1 and 2),

3.1.5 Size (outside diameter and nominal wall thickness for round tubing and the outside dimensions and nominal wall thickness for square and rectangular tubing),

3.1.6 Length (specific or random, see 10.3),

3.1.7 End condition (see 15.3),

3.1.8 Burr removal (see 15.3),

3.1.9 Certification (see 15.4),

3.1.10 ASTM specification number,

3.1.11 End use, and

3.1.12 Special requirements.

4. Process

4.1 The steel shall be made by one or more of the following processes: open-hearth, basic-oxygen, or electric-furnace.

4.2 Steel may be cast in ingots or may be strand cast. When steels of different grades are sequentially strand cast, identification of the resultant transition material is required. The producer shall remove the transition material by any established procedure that positively separates the grades.

5. Manufacture

5.1 The tubing shall be made by a seamless or welding process.

5.2 Welded tubing shall be made from flat-rolled steel by the electric-resistance welding process. The longitudinal butt joint of welded tubing shall be welded across its thickness in such a manner that the structural design strength of the tubing section is assured.

5.2.1 Structural tubing welded by electric-resistance methods is normally furnished without removal of inside flash.

5.3 The tubing may be stress relieved or annealed as is considered necessary by the manufacturer to conform to the requirements of this specification, except as required by 5.4.

5.4 Grade D tubing shall be heat treated at a minimum temperature of 1100°F for 1 h/in. of thickness, ½ h minimum.

6. Heat Analysis

6.1 An analysis of each heat of open-hearth, basic-oxygen, or electric-furnace steel shall be made by the manufacturer. This analysis shall be made from a test ingot taken during the

[1] This specification is under the jurisdiction of ASTM Committee A-1 on Steel, Stainless Steel, and Related Alloys and is the direct responsibility of Subcommittee A 01.09 on Steel Pipe.

Current edition approved July 15, 1993. Published September 1993. Originally published as A 500 – 64. Last previous edition A 500 – 92.

[2] *Annual Book of ASTM Standards*, Vol 01.03.

[3] *Annual Book of ASTM Standards*, Vol 01.05.

[4] Available from Standardization Documents Order Desk, Bldg. 4 Section D, 700 Robbins Ave., Philadelphia, PA 19111-5094, Attn: NPODS.

machine threaded rods threaded both ends right-hand threads: fig. 140 right- and left-hand threads: fig. 253

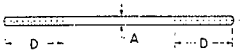

MATERIAL: Carbon steel.

MAXIMUM TEMPERATURE: 750°F.

ORDERING: Specify rod size, figure number, name, rod length. Specify thread length if other than standard.

loads • standard thread lengths

rod size A	maximum recommended load, lb▪ 650°F	750°F	standard rod thread length D◆, in
3/8	610	540	2½
½	1130	1010	2½
5/8	1810	1610	2½
¾	2710	2420	3
7/8	3770	3360	3½
1	4960	4420	4
1¼	8000	7140	5
1½	11630	10370	6
1¾	15700	14000	7
2	20700	18460	8
2¼	27200	24260	9
2½	33500	29880	10
2¾	41580	37066	11
3	50580	45085	12
3¼•	60480	53906	13
3½•	71280	63493	14
3¾•	82890	73855	15

◆ 3/8, ½ and 5/8 inch fig. 140 rod in lengths of 24 inch or shorter will be furnished as continuous thread rod unless order states that all thread rod is not acceptable.

▪ With minimum safety factor of 5.

• Furnished with 8 UN threads.

continuous thread: fig. 146

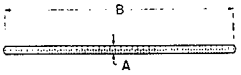

SIZE RANGE: ¼ through 1½ inch diameter. Stocked in six, ten and twelve foot lengths. Other even foot lengths can be furnished to order.

MATERIAL: Carbon steel; rod threaded complete length.

FINISH: Black or electro-galvanized; furnished black unless otherwise specified.

MAXIMUM TEMPERATURE: 750°F.

ORDERING: Specify rod diameter and length, figure number, name.

loads • weights • bundling

rod size A	max recom load, lb▪ 650 F	750 F	weight (approx) lbs ft	feet of rod per carton: length B 6 ft	length B 10 ft	length B 12 ft
¼	240	215	.12	288	480	576
3/8	610	540	.30	144	240	288
½	1130	1010	.53	72	120	144
5/8	1810	1610	.84	36	60	72
¾	2710	2420	1.2	36	60	72
7/8	3770	3360	1.7	24	40	48
1	4960	4420	2.3	4	30	3
1¼	8000	7140	3.6	2	20	2
1½	11630	10370	5.1	1	10	1

▪ With minimum safety factor of 5.

coach screw rods machine threaded on opposite end: fig. 142

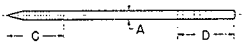

MATERIAL: Carbon steel.

ORDERING: Specify rod size, figure number, name, rod length.

standard thread lengths • loads

rod size A	standard rod lengths	coach screw thread C, in	standard rod thread D, in	maximum recommended load, lb▪
3/8	3½, 8	2	2½	390
½	3½, 8	2 7/16	2½	640
5/8	4	2 9/16	2½	760
¾	5	2 9/16	3	830

▪ With minimum safety factor of 5. Load rating is conditional on proper installation.

forged steel clevis
fig. 299

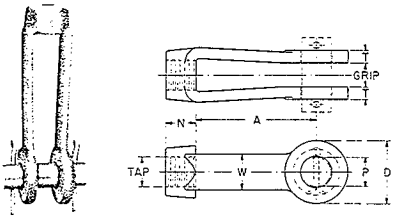

MAXIMUM RECOMMENDED LOAD: 95,400 lbs.

MATERIAL: Forged steel.

SERVICE: For use on high temperature piping installation.

APPROVALS: Complies with Federal Specification WW-H-171E (Type 14) and Manufacturers Standardization Society SP-69 (Type 14).

FEATURES:
- Complies fully with the code for pressure piping.
- Supports loads equal to the full limitation of the hanger rod.
- Available with pin and cotter pins, if required.

ORDERING: Specify rod size, figure number, name. If pin and cotter pins are required, specify "with pin." If other than standard combination of clevis size and rod tapping size is required, specify clevis number, special rod tapping size, pin size, grip.

loads • weights • dimensions (inches)

tap size	max recommended load, lb■ 650°F	750°F	weight (approx) lbs each without pin	with pin	A	D	N	pin size P	T	W	grip	size no.
⅜	610	1540	.9	1.0				½			½	
½	1130	1010	.7	.9	3 11/16	1 7/16	⅝	⅝	5/16	1 1/16	½	2
⅝	1810	1610	.7	.9				¾			⅝	
¾	2710	2420	2.5	3.0	5	2	⅞	⅞	⅜	1¼	¾	2½
⅞	3770	3360	2.5	3.4				1			⅞	
1	4960	4420	4.0	5.1	5	3	1 5/16	1⅛	½	1½	1	3
1¼	8000	7140	3.8	5.5				1⅜			1¼	
1½	11630	10370	6.0	8.5	6	3½	1⅝	1⅝	½	1¾	1½	3½
1¾	15700	14000	8.0	12.9	6	4	1¾	1⅞	½	2	1½	4
2	20700	18460	16.0	23.3	7	5	2¼	2¼	⅝	2½	2½	5
2¼	27200	24260	26.0	35.1	8	6	2¾	2½	¾	3	2½	6
2½	33500	29880	25.5	36.0				2¾			2½	
2¾	41580	37066	36.0	50.0	9	7	3	3	⅞	3½	2½	7
3	50580	45085	35.0	51.5				3¼			2½	
3¼ ◆	60480	53906	90.0	116.0	10	8	4	3½	1½	4	4	8
3½ ◆	71280	63493	88.0	118.0				3¾			4	
3¾ ◆	82890	73855	86.0	120.0				4			4	
4 ◆	95400	85001	84.0	122.0				4¼			4	

■ Based on the allowable stresses shown in the ANSI Code for Pressure Piping.
◆ Furnished with 8 UN series threads.

U-bolts

standard U-bolt
fig. 137
special U-bolt (non-standard dimensions)
fig. 137S •

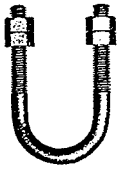

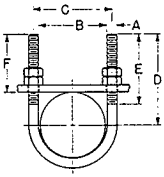

SIZE RANGE: ½ to 36 inch pipe.

MATERIAL: Carbon steel U-bolt and four finished hex nuts.

FINISH: Black or galvanized; furnished black unless otherwise specified.

SERVICE: Recommended for support, or guide of heavy loads; often employed in power and process plant service.

MAXIMUM TEMPERATURE: 750°F.

APPROVALS: Complies with Federal Specification WW-H-171E (Type 24) and Manufacturers Standardization Society SP-69 (Type 24).

ORDERING FIG. 137: Specify rod size x pipe size (as ⅝ x 6), figure number, name. U-bolt will be furnished with longer tangents D or with longer threads E if so required and ordered. If hex nuts are not required, specify "without hex nuts."

ORDERING FIG. 137S: Specify figure number, name, material specification, dimensions A, B, C, D and E, and "with hex nuts" or "without hex nuts."

SPECIAL NOTE: When furnished hot-dip galvanized, oversize hex nuts must be used.

plastic coated: fig. 137C

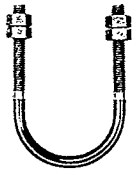

fig. 137C coated U-bolt

SIZE RANGE: ½ to 8 inch pipe.

MATERIAL: Carbon steel U-bolt and four finished hex nuts. Formed portion of the U-bolt is plastic coated.

SERVICE: Recommended for support, anchor or guide for glass, copper, brass and aluminum pipe.

MAXIMUM TEMPERATURE: 225°F.

ORDERING: Specify rod size x pipe size (as ⅜ x 2), figure number, name. If hex nuts are not required, specify "without hex nuts."

load • weights • packaging • dimensions (inches)

pipe size	rod size A	maximum recommended load, lbs 650°F	maximum recommended load, lbs 750°F	weight with nuts (approx) lbs each	no of pieces per carton fig. 137	no of pieces per carton fig. 137C	B	C	D	E	F
½	¼	485	435	.11	50	50	15/16	1 3/16	2¾	2⅛	2 5/16
¾	¼	485	435	.12	50	50	1⅛	1⅜	2¾	2⅛	2 7/32
1	¼	485	435	.12	50	50	1⅜	1⅝	2¾	2⅛	2 7/32
1¼	⅜	1220	1090	.28	50	50	1 11/16	2 1/16	2⅞	2⅛	2 1/32
1½	⅜	1220	1090	.30	50	50	2	2⅜	3	2½	2 1/16
2	⅜	1220	1090	.33	50	50	2 7/16	2 13/16	3¼	2½	2 1/16
2½	½	2260	2020	.73	50	50	2 15/16	3 7/16	3¾	3	2 5/16
3	½	2260	2020	.78	50	50	3 9/16	4 1/16	4	3	2¼
3½	½	2260	2020	.84	50	50	4 1/16	4 9/16	4¼	3	2¼
4	½	2260	2020	.90	50	50	4 9/16	5 1/16	4½	3	2¼
5	½	2260	2020	1.0	...	15	5⅝	6⅛	5	3	2 7/32
6	⅝	3620	3230	2.0	...	15	6¾	7⅜	6⅛	3¾	2 13/16
8	⅝	3620	3230	2.3	...	...	8¾	9⅜	7⅛	3¾	2 13/16
10	¾	5420	4830	4.9	...	...	10⅞	11⅝	8⅜	4	3
12	⅞	7540	6730	7.7	...	...	12⅞	13¾	9⅝	4¼	3¼
14	⅞	7540	6730	8.3	...	...	14⅛	15	10¼	4¼	3¼
16	⅞	7540	6730	9.2	...	...	16⅛	17	11¼	4¼	3¼
18	1	9920	8850	13.5	...	...	18⅛	19⅛	12⅝	4¾	3⅜
20	1	9920	8850	14.6	...	...	20⅛	21⅛	13⅝	4¾	3⅝
24	1	9920	8850	16.9	...	...	24⅛	25⅛	15⅝	4¾	3⅝
28	1	9920	8850	18.0	...	...	28⅛	29⅞	17⅝	4¾	3⅝
30	1	9920	8850	19.1	...	...	30⅛	31⅞	18⅝	4¾	3⅝
36	1	9920	8850	23.2	...	...	36⅛	37⅞	21⅝	4¾	3⅝

• Loads, weights and dimensions shown do not apply for Fig. 137S.

W320-28-034

Exhaust Skid Maximum Allowable Leakage Criteria

	CALCULATION IDENTIFICATION AND INDEX	Page i of i Date 3-15-95

This sheet shows the status and description of the attached Design Analysis sheets.

Discipline 28/HVAC WO/Job No. ER4319 Calculation No. ~~W320-H-034~~ ~~28~~ ~~W320-28-030~~ W320-28-034

Project No. & Name W-320 Tank 241-C-106 Waste Retrieval

Calculation Item Exhaust Skid Maximum Allowable Leakage Criteria

These calculations apply to:

Dwg. No. N/A Rev. No. N/A

Dwg. No. N/A Rev. No. N/A

Other (Study, CDR) Procurement Specifications:
W-320-P1 Exhaust Skid Rev. No. 0
preliminary

The status of these calculations is:

[] Preliminary Calculations

[x] Final Calculations

[] Check Calculations (On Calculation Dated)

[] Void Calculation (Reason Voided)

Incorporated in Final Drawings? [] Yes [X] No

This calculation verified by independent "check" calculations? [] Yes [X] No

Original and Revised Calculation Approvals:

	Rev. 0 Signature/Date	Rev. 1 Signature/Date	Rev. 2 Signature/Date
Originator	PH Langardt 3-20-95		
Checked by	R. Pina 3/20/95		
Approved by	PH Langardt 3-20-95		
Checked Against Approved Vendor Data	Charles T. Li 4/16/98		

INDEX

Design Analysis Page No.	Description
i	Calculation Identification and Index
1	Objective, Design Inputs, Calculations
2	Findings & Conclusions
A1-A2	Appendix A: ASME N509 Table B-3, Figure B-5 (partial)

KEH 0378.00 (06/92) KEF072

Calc. No. W320-H-034
Revision 0
Page No. 1 of 2

DESIGN ANALYSIS

Client WHC
WO/Job No. ER4319
Subject Exhaust Skid Maximum Allowable Leakage Criteria
Date 3-15-95 By PH Langowski
Checked 3/20/95 By R Pino
Location 241-C/200 East
Revised By

1.0 OBJECTIVE

The objective of this calculation is to determine the maximum allowable leakage from the Exhaust Skid per ASME N509 for input to procurement specification W320-P1.

2.0 DESIGN INPUTS

2.1 CRITERIA AND SOURCE

DOE General Order 6430.1A
Functional Design Criteria WHC-SD-W320-FDC-001, rev. 2, 1/18/94

2.2 GIVEN DATA

1. Non-ESF (Engineered Safety Feature) per W320-P1.
2. 180 to 360 scfm exhaust flow rate per W320-P1.

2.3 ASSUMPTIONS

none.

2.4 METHODS

Hand calculations.

2.5 REFERENCES

1. W-320-P1 "Procurement Specification, Exhaust Skid Ventilation Air Cleanup Trains", rev. 0
2. ASME N509-1989 "Nuclear Power Plant Air-Cleaning Units and Components"

3.0 CALCULATIONS

Maximum allowable leakage of the Exhaust Skid is determined by following the ASME N509 (ref. 1) Appendix B information included in Appendix A of this calculation. To use Table B-3, the leakage class of the Exhaust Skid must first be determined.

The Leakage class of the Exhaust Skid is determined by Figure B-5, Scheme #10. In scheme #10, the contaminated space is the Tank 241-C-106, the interspace is the "clean" outdoors of the Tank Farm, and the protected space is also the "clean" outdoors of the Tank Farm. From Note 4, with a clean interspace and exhaust piping which is always under negative pressure for all modes of operation, the piping between the Tank and the Exhaust Skid may be leakage Class II. Figure B-5 lists the Air Cleaning Unit and the Fan as leakage Class II.

Therefore, leakage Class II, non-ESF (see given data, ref. 2) criteria will be used for Table B-3. Per Table B-3, at leakage Class II and non-ESF, a total of 6% of the rated flow is the maximum allowable leakage. Per note 1 of Table B-3, this leakage rate is applicable at operating pressure. In note 4 of Table B-3, the housing surface area to total surface area ratio is assumed to approximate the Exhaust Skid with the Exhaust Skid test sections considered as duct. Note 2 of Table B-3 gives the formula to determine the allowable leakage.

KEH 0037.00 (06/92) KEF055

DESIGN ANALYSIS

Client WHC
Subject Exhaust Skid Maximum Allowable Leakage Criteria
Location 241-C/200 East

WO/Job No. ER4319
Date 3-15-95 By PH Langowski
Checked 3/20/95 By R. Pino
Revised By

The first component of the formula goes to unity as the surface area of the duct section (a) and the surface area of the total system ductwork per leakage class (A) are the same as when the system considered is the Exhaust Skid only. The B31.3 piping between the Tank and the Exhaust Skid does not fall under the guidelines of N509. For our purposes, the N509 system is the Exhaust Skid only. Therefore, the maximum allowable leakage rate is the product of the Table B-3 value (P) and the system rated flow (Q).

For a value of P=0.06 and Q=180 scfm, the maximum allowable leakage rate is 10.8 scfm. For a value of P=0.06 and Q=360 scfm, the maximum allowable leakage rate is 21.6 scfm.

4.0 FINDINGS & CONCLUSIONS

The Exhaust Skid maximum allowable leakage rate as specified in W320-P1 shall be 10 scfm at -50" w.g. The 10 scfm correlates to the maximum allowable at the minimum 180 scfm airflow rate. The -50" w.g. is the maximum approximate pressure at a deadheaded exhaust fan inlet and is consistent with the remainder of the Project documentation.

Vendor experience with the Ellis & Watts air cleanup train for W-030 with a maximum allowable leakage rate of 10 scfm at -32" w.g. showed an actual leakage rate of approximately 2 scfm (including the fan shaft seal). The W-030 unit is a similarly sized unit to the W-320 Exhaust Skid. Therefore, the 10 scfm criteria on the W-320 unit should not prove unobtainable.

APPENDIX A

28
W-320-H-034
Rev 0
PHR 3-20-95
3/20/95

TABLE B-3 MAXIMUM ALLOWABLE LEAKAGE[1] FOR AIR CLEANING EFFECTIVENESS (PERCENT OF RATED FLOW)

Leakage Class [Note (2)]	ESF			Non-ESF		
	Duct [Note (3)]	Housing	Total [Note (4)]	Duct [Note (3)]	Housing	Total [Note (4)]
I	0.10	0.10	...	0.50	0.10	0.6
II	1.00	0.20	1.2	5.00	1.00	6.0

NOTES:
(1) Leak rate at operating pressure
(2) Refer to Section B4 for configuration that determines leakage class. Leakage is apportioned to surface area by

$$L_S = \frac{a}{A} \times \frac{P \times Q}{100}$$

where
L_S = allowable leakage in duct section, scfm
P = allowable percent leakage
Q = system rated flow, cfm
a = surface area of the duct section, ft^2
A = surface area of the total system ductwork per leakage class, ft^2
$\frac{L_S}{a}$ = the allowable unit leakage by this criteria, cfm/ft^2

(3) All ducts under positive pressure which discharge into the plant stack for high level release credit shall be leakage Class I.
(4) Assumes housing surface area is 20% of duct surface area. Duct and housing leakages shall be adjusted for actual housing and duct surface area ratios, but the total percent leakage shall not exceed the sum of the listed percent leakages for duct and housing.

on ANSI/ASQC Z1.4 or other equivalent standard; however, this is not mandatory.

B4 NUCLEAR AIR TREATMENT SYSTEM CONFIGURATIONS AND LEAKAGE CLASSES

A nuclear air treatment system can be defined schematically in terms of three spaces and two components.

The three spaces (refer to para. 3 definitions) may be either exterior or interior and are:

(a) the contaminated space C-106
(b) the protected space the outdoors
(c) the interspace the outdoors
  (1) contaminated
  (2) clean clean

The two components are:
(d) fan
(e) air-cleaning unit

All three of the above spaces represent possible locations for the different parts of the nuclear air treatment system. The contaminated and protected spaces also include the points of system origin and termination, respectively. The interspace refers to all other spaces — contaminated or clean — where the nuclear air treatment system or its parts may be located.

Examples of contaminated space/interspace/protected space arrangements are:

Contaminated Space	Interspace	Protected Space
Containment	Plant spaces	Offsite
Plant site	Equipment room	Control room
Secondary containment	Equipment room	Offsite

For recirculating systems, the contaminated space and protected space merge into one "contaminated and protected space."

Leakage Classes I and II have been assigned to the various sections of each nuclear air treatment system to represent the qualitative effect of leakage on the nuclear air treatment system function. Thus, Leakage Class II classification indicates that due to system configurations and location a higher leak rate may be allowable. Conversely, a Leak Class I classification indicates a more stringent leak rate is required.

Leakage Classes are noted on Figs. B-5, B-6, and B-7.

28
W320-A-034
rev 0
PHR 3-20-95
3/20/95

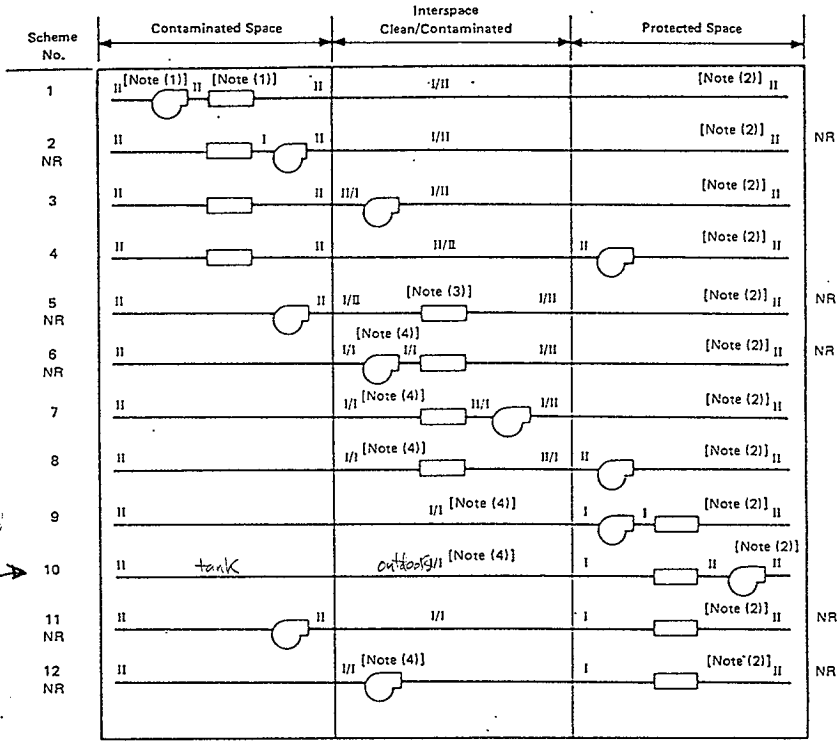

NOTES:

(1) Symbols — Air Cleaning Unit; Fan

NR — Not Recommended

(2) All ducts under positive pressure which discharge into the plant stack for high level release credit shall be leakage Class I.

(3) Space classification is based on the relative concentration of the space with respect to the duct (e.g., *Contaminated Interspace* means concentration within space is greater than duct or housing at that point). Thus, as duct concentration changes due to filtration, the space classification will change in a given area.

(4) Noted duct section which pass through a Clean Interspace and which are under a negative pressure for all modes of operation may be leakage Class II.

FIG. B-5 SINGLE PASS AIR CLEANING SYSTEM CONFIGURATIONS

28
W320-H-034
rev 0
PHH 3-20-95
TAP 3/20/95

W320-28-035

Recirculation Heater,
N509 Duct Requirements

	CALCULATION IDENTIFICATION AND INDEX	Page i of i Date 3-28-95

This sheet shows the status and description of the attached Design Analysis sheets.

Discipline 28/HVAC WO/Job No. ER4319 Calculation No. ~~W320-H-035~~ W320-28-035 ~~28~~

Project No. & Name W-320 Tank 241-C-106 Waste Retrieval

Calculation Item Recirculation Heater, N509 Duct Requirements

These calculations apply to:

Dwg. No. N/A Rev. No. N/A

Dwg. No. N/A Rev. No. N/A

Other (Study, CDR)

W-320-P7 Electric Heating Coil Rev. No. 0

Dwg H-2-818480, Process Bldg, Skid Vent. Piping Rev. No. ~~0~~ 1

W-320-C6, Pkg 5 - HVAC Skid Fabrication Rev. No. 0

The status of these calculations is:

[] Preliminary Calculations

[X] Final Calculations

[] Check Calculations (On Calculation Dated)

[] Void Calculation (Reason Voided)

Incorporated in Final Drawings? [] Yes [X] No

This calculation verified by independent "check" calculations? [] Yes [X] No

Original and Revised Calculation Approvals:

	Rev. 0 Signature/Date	Rev. 1 Signature/Date	Rev. 2 Signature/Date
Originator	[signature] 3/28/95		
Checked by	[signature] 4-10-95		
Approved by	[signature] 4-10-95		
Checked Against Approved Vendor Data	Charles T. Li 4/16/98		

INDEX

Design Analysis Page No.	Description
i	Calculation Identification and Index
1	Objective, Design Inputs, Findings & Conclusions
2	Calculations
A-1,2,3,4	ICF KH Memo, QAP

KEH 0378.00 (06/92) KEF072

DESIGN ANALYSIS

Client WHC
Subject Recirculation Heater, N509 Duct Requirements
Location: 241-C/200E

WO/Job No. ER4319
Date 3/28/95 By R.Pina
Checked 4-10-95 By PHL
Revised By

1.0 OBJECTIVE

To verify the Recirculation Heater Duct Housing is constructed in accordance with the requirements of ASME N509 and ASME N510, as applicable.

2.0 CRITERIA

DOE General Order 6430.1A
Functional Design Criteria, WHC-SD-W320-FDC-001, Rev. 2, 1/18/94
Nuclear Power Plant Air-Cleaning Units and Components, ASME N509-1989
Testing of Nuclear Air Treatment Systems, ASME N510-1989

3.0 GIVEN DATA

Normal Operating Pressure -19.75·in·WG from Ref. (1)

4.0 ASSUMPTION

See text for assumptions.

5.0 REFERENCES

1) Calc W320-~~H~~28-022, Seal Pot Sizing For Leak Detection, Rev. 0
2) ERDA 76-21, Nuclear Air Cleaning Handbook, 1970
3) Calc W320-~~H~~28-005, Sizing Electric Heating Coil, Rev. 1
4) W-320-P7, Electric Heating Coil, Rev. 0
5) Dwg H-2-818480, Process Building, Skid Ventilation Piping, Rev. 0
6) W-320-C6, Tank 241-C-106 Sluicing, Pkg 5 - HVAC Skid Fabrication, Rev. 0
7) Rectangular Industrial Duct Construction Standards, SMACNA, 1980

6.0 FINDINGS AND CONCLUSIONS

The requirements for the fabrication, inspection and testing of the recirculation heater and heater duct housing comply with the applicable requirements of ASME N509 and ASME N510. References (4), (5) and (6) contain the details for duct construction and heater selection. The applicable ASME N509/N510 requirements have been verified satisfactory in this calculation. See Appendix A of this calculation for clarification of the applicable N509 technical requirements.

7.0 CALCULATIONS

Requirement of N509, para		Resolution
Structural Load Requirements, 4.5		n/a since not an Engineered Safety Feature (ESF)
Normal Operating Pressure, 4.6.3	-19.75·in·WG	Satisfied, see given data
Leak Pressure Test, 4.6.4, 4.6.5.3 & 4.14	-20·in·WG	Satisfied, based on Table 5.5, Ref (2), process off-gas, operating mode B, Zone III which indicates Level 5. From Table 5.6, zero leakage up to 20 in. WG. See Ref. (6)

Client WHC
Subject Recirculation Heater, N509 Duct Requirements
Location: 241-C/200E

WO/Job No. ER4319
Date 3/28/95 By R.Pina
Checked 4-6-95 By RHR
Revised By

7.0 CALCULATIONS cont.

Requirement of N509, para		Resolution
Maximum Design Pressure, 4.6.5	-40 in WG	Satisfied, exceeds normal operating pressure, exceeds leak test pressure, pressure is an assumed transient condition. See Ref. (6)
Structural Integrity Test, 4.6.6.1 (1.25 x -40 in WG)	-50 in WG	Satisfied, see Ref. (6)
Heater Selection, 5.5		
Heater meets 4.5		n/a
Replaceable		Satisfied
Not mounted to Adsorber Frame		n/a
Face velocity exceed manuf. min.		Satisfied
Heater Stage based on calcs, 5.5.1		Satisfied, see Ref. (3)
Heater Overtemperture Protection, 5.5.1		Satisfied, see Ref. (4)
Visual Inspection, 5.5.1.7, ASME N510		Satisfied, see Ref. (4) & Ref. (6)
Drawings, 5.5.2		Satisfied, see Ref. (5)
ESF Heaters meet IEEE 323 & 344, 5.5.3		n/a, non-ESF
Documentation, 5.5.4		Satisfied, see Ref. (4)
Structural Requirements, 5.10.3		Design based on Ref. (7) & (2) duct construction tables
Duct Materials, 5.10.4, 5.10.6		Satisfied, see Ref (6) & Ref. (5), duct thickness & stiffners based on Table 5.3 & 5.4 of ERDA 76-21. Materials Selected: reinforcement 2-1/2 x 2-1/2 x 1/4, duct 10GA, ASTM A240, TY 304L
Housing Leak & Structural Test, 6, 6.2.2, ASME N510		Satisfied, see Ref. (4) and (6). Since no leakage is allowed, the pressure decay and the constant pressure methods are not utilized. The specified test will verify that no leakage has occured at the test pressure.
Duct Welding, 5.10.5, 7.3		Satisfied, see Ref. (6)
NQA-1, 8.1		Satisfied by WHC input to Ref. (4)
Air Heater Performance, 14, 14.7 ASME N510		Satisfied, see Ref. (4)

DON'T SAY IT --- *Write It!*

DATE: August 30, 1994

TO: David Shrimpton, Roland Niemuth

FROM: Peter H. Langowski S3-07

cc: Rick Bradshaw, Dan Evans, Ray Pina, Paul Rice, Luther Smith

SUBJECT: W-320 QAP-826, rev. 1

INTRODUCTION & BACKGROUND

I have been operating on Project W-320 for the last ten months under Quality Assurance Plan (QAP) #826, rev. 0 signed 10/26/93 by Mr. Shrimpton. I recently received your revision #1 to the QAP # 826 signed 8/25/94 by Mr. Shrimpton and wish to inform you of my interpretation of your change. In addition, Mr. Shrimpton is asked to provide further feedback on questions stated herein.

Section 1 item 3.c. of QAP rev. 1 now states that the following is applicable to the W-320 Project:

> "ASME N509. Procurement, installation shall be performed and completed based on approved design document and technical requirements of ASME N509. Quality program requirements shall be imposed using a graded approach. (DOE 6430.1A, section 1550-2.5.5 invokes ASME N509 when design includes HEPA filters.)"

My interpretation of this statement is that the technical requirements of N509 which apply to HEPA filter assemblies (as is stated in the 6430.1A paragraph referenced) are to be implemented on Project W-320. Quality requirements are to be implemented by using a graded approach for the safety class 3 HEPA filter assemblies. As discussed in the interpretation below, the implementation of these technical requirements is not a task which should be achieved with a simple reference to N509.

DISCUSSION

In addition to it's requirements for HEPA filter assemblies, N509 also includes many technical design requirements for instrumentation, fans, heating coils, etc. "HEPA filter assemblies" are the exact words used by the 6430.1A paragraph referenced on the QAP. "HEPA filter assemblies" are interpreted to consist of "HEPA filters" and "HEPA filter housings". It is assumed that for Project W-320 only the HEPA filter assemblies will comply with ASME N509. **The WHC should clarify their intentions on this issue (Action: Mr. Shrimpton).**

Section 2 of N509 states that: "ANSI/ASME AG-1-1988 contains code requirements for nuclear air and gas treatment equipment. These code requirements may be substituted for the requirements listed herein." Please note that many of the specific design requirements of AG-1 were included in the Project W-320 design media, particularly procurement

W320-H-035
REV. 0
A-1

54-3000-101 (12/92) GEF014

specifications P3, P4, P5, P6, P7, and P8. The entire AG-1 document was not imposed in these specifications, but specific design requirements derived from AG-1 were included.

For Project W-320, the ASME N509 technical requirements for HEPA filters will be shown in the drawing notes with a simple statement: "HEPA Filters: In accordance with HPS-158-M, Hydrogen Fluoride- and Caustic-Resistant Nuclear Grade HEPA Filters, size x, stainless steel case, pleated fiberglass-aromatic polyamide media with coated aluminum separators, and flat strip gasket. Filter units will be provided by the Government and furnished separately."

The HEPA filter housings defined in N509 are for lighted, walk-in type, open-face housings as typically found in a large nuclear power plant air-cleaning unit. Project W-320 will use bag-in/bag-out side-access HEPA filter housings. There are more design details different than there are similar between the two types of HEPA filter housings.

W-320-P1 Exhaust Skid Procurement Specification will only convey the individual technical requirements for housing the HEPA filters so as not to confuse the vendor with a sweeping reference to N509. The statement in the P1 spec reads: "The ACT shall meet the design requirements of ASME N509 (non-ESF) as detailed in the following paragraphs...". It is simpler and less confusing to the vendor to only list the few attributes of N509 that apply to HEPA filter housings than to implement the entire N509 and include a long list of exceptions. **There will be no direct requirement in Project W-320 design documents to implement N509 in it's entirety unless specifically requested by WHC (Action: Mr. Shrimpton).**

SUMMARY

There will be no direct referenced requirement to design to N509 in it's entirety in any of the Project W-320 documentation even though it is now imposed by QAP rev. 1. Mr. Rice concurs with my interpretation of the QAP. I wanted to give you this heads up on my interpretation of your QAP before you reviewed the design documents.

I am proceeding with the above interpretation of the QAP. Mr. Shrimpton please provide additional information or feedback to actions as requested above.

Please contact me with questions. We can gather to discuss the issue at your convenience.

c:\wpwin\w320c106\w320_85.dsi

1320-H-035
EV. 0
1-2

KAISER ENGINEERS HANFORD

QUALITY ASSURANCE PLAN

Project No.	Work Order No.	Contract No.	QA Plan No.	Rev.
W-320	ER-4319	N/A	826	0

Client WHC ☒ PNL ☐ Other ☐

Project/W.O. Description: TANK 241-C-106 SLUICING

Safety Class (Highest): 1

KEH Assignment Includes: CD ____ ACD ____ DD ✓ CF ✓ CM ✓ AI ✓ Procurement ✓ Other ____

Section I

1. The project/work order contains systems, components, structures assigned as Safety Class 1: For Safety Class 1, all applicable NQA-1 basic requirements and corresponding supplements shall be invoked unless exception is documented in Supplemental Section. — Yes ☒ No ☐
2. The project/work order contains systems, components, structures assigned as Safety Class 2: For Safety Class 2, all applicable NQA-1 basic requirements shall be selectively and judiciously applied. — Yes ☒ No ☐
3. The project/work order contains systems, components, structures assigned as Safety Class 3. — Yes ☒ No ☐
   a. *CF Work.* KEH procedures apply as applicable to the assignment of work. Work shall be performed and completed per approved design documents based on industrial codes and standards. — Yes ☒ No ☐
   b. *CM Work.* Work shall be performed and completed per approved design documents based on industrial codes and standards. — Yes ☒ No ☐
   c. *ASME N509.* Procurement, installation shall be performed and completed based on approved design documents and technical requirements of ASME N509. Quality program requirements shall be imposed using a graded approach. — Yes ☐ No ☒
4. This project/work order contains work activities assigned as Safety Class 4. — Yes ☐ No ☒
   a. *CF Work.* KEH procedures apply as applicable to the assignment of work. Work shall be performed and completed per approved design documents based on accepted commercial practices. — Yes ☐ No ☒
   b. *CM Work.* Work shall be performed and completed per approved design documents based on accepted commercial practices. — Yes ☐ No ☒
5. This work is W-DOE Part B permit work. — Yes ☐ No ☒

KAISER ENGINEERS (HANFORD) CONTROLLED DOCUMENT STATION NO. 2 DIST. OCT 28 1993 SUPERSEDED BY W-320 NE-3

QUALITY ACTIVITIES — Section II

1. Quality Engineering (QC) review of Safety Class 1 & 2 requisitions is required. — Yes ☒ No ☐
2. Safety Class 1 & 2 items will be procured from qualified suppliers or designated as commercial grade items. Remainder of items (Safety Class 3 & 4) will be commercially available procurement. — Yes ☒ No ☐
3. All items will be procured as commercially available. (Safety Class 3 & 4) — Yes ☐ No ☒
4. KEH QC receiving inspection is required for Safety Class 1 and/or 2 items and/or for the items listed on the supplemental requirements sheet. — Yes ☒ No ☐
5. Inspection and testing specified in design document shall be performed and documented in accordance with a process control package. — Yes ☒ No ☐
6. Title III, acceptance inspection shall be performed and documented in accordance with an approved Acceptance Inspection plan. — Yes ☒ No ☐
7. For WDOE permitted work, KEH shall prepare and maintain a Construction Quality Assurance, CQA Plan. — Yes ☐ No ☒
8. A formal independent design verification for Safety Class 1 & 2 systems shall be performed by: Others ☐ KEH ☒ WHC ☐ PNL ☐ N/A ☐
9. The facility classification per DOE Order 5430.1A is: General Facility ☐ Special Facility ☒ N/A ☐
10. For W-DOE Part B permit work, the usage of the KEH NCR procedure is required for all Safety Classes. — Yes ☐ No ☒

KEH-1945.01 (11/91)

KAISER ENGINEERS HANFORD	QUALITY REQUIREMENT DOCUMENTS	QA Plan No. 826

Section III

1. Functional Design Criteria (FDC): WHC-SD-W-320-FDC-001 — Rev. 0 — N/A ☐
2. Conceptual Design Report (CDR): N/A — Rev. — N/A ☐
3. Project Specific Quality Assurance Project Plan (QAPP): WHC-SD-W320-QAPP-001 AND TANK WASTE PROJECTS QAPP WHC-TWP-QAPP-001 R.0 — Rev. 0 — N/A ☐
4. Safety Evaluation document(s): NOT ISSUED — Rev. — N/A ☐
5. Letter(s) of Instruction (LOI): 9352757, 9355663, 9357233, 9358855, R.1. — Rev. — N/A ☐
6. Supplemental Design Criteria (SDC): — Rev. — N/A ☒
7. Technical Data Checklist (TDC): NOT ISSUED — Rev. — N/A ☐
8. Other: (PSEL) WHC-SD-WM-SEL-023.
   LETTER REART WHC-SD-WM-ES-234, REV.2

SUPPLEMENTAL REQUIREMENTS

1. WHC-SD-W320-QAPP-001, REV.0 DELINEATES THE PROJECT'S SAFETY CLASSES AND TYPES OF INSPECTION FOR EACH SYSTEM, COMPONENT, AND STRUCTURE.
2. QUALITY CONTROL RECEIVING INSPECTION IS REQUIRED FOR ALL FASTENERS AS DESCRIBED BY KEH KAP 4.1 (4.0), AND ANY ENGINEERED EQUIPMENT REGARDLESS OF SAFETY CLASS. QC RECEIVING ON ANY OTHER PROCURED MATERIALS CAN BE ON A CASE-BY-CASE BASIS.
3. SEE QAP NO. 828 FOR THE 3 EQUIPMENT CONTAINERS.

Rev.	Description of Change	QE	Date	Project Mgr.	Date
0	Original Issue	R.C. [signature]	10.25.93	[signature]	10/26/93
		[signature]	4/10/95	W-320-035	
		[signature] 4-10-95		REV. 0, A-4	

DISTRIBUTION SHEET

To	From	Page 1 of 1
Distribution	JW Bailey	Date 25 July 1998
Project Title/Work Order		EDT No. 622244
Project W-320 Tank 106-C, HNF-2486, HVAC Calculations, Vol. 4		ECN No. n/a

Name	MSIN	Text With All Attach.	Text Only	Attach./ Appendix Only	EDT/ECN Only
JW Bailey	S2-48				
W-320 Project Files	R1-29				