S

JUL 30 1998
Sta. 4 58

ENGINEERING DATA TRANSMITTAL

Page 1 of 1

1. EDT 622235

2. To: (Receiving Organization) Distribution	3. From: (Originating Organization) TWRS Projects/SST Retrieval	4. Related EDT No.: n/a
5. Proj./Prog./Dept./Div.: W-320 TWRS/TCPN # ~~D2MA1~~ D2991	6. Design Authority/ Design Agent/Cog. Engr.: JW Bailey, NHC	7. Purchase Order No.: n/a
8. Originator Remarks: For approval and release of a new supporting document. This document has been generated to ensure retrievability of the Project W-320 "Piping Calculations, Vol. 7".		9. Equip./Component No.: n/a
		10. System/Bldg./Facility: 241-C-106
11. Receiver Remarks: 11A. Design Baseline Document? [X] Yes [] No		12. Major Assm. Dwg. No.: n/a
		13. Permit/Permit Application No.: n/a
		14. Required Response Date:

15. DATA TRANSMITTED

(A) Item No.	(B) Document/Drawing No.	(C) Sheet No.	(D) Rev. No.	(E) Title or Description of Data Transmitted	(F) Approval Designator	(G) Reason for Transmittal	(H) Originator Disposition	(I) Receiver Disposition
1	HNF-2477	-	0	Project W-320, 241-C-106 Sluicing, Piping Calculations, Vol. 7	NA			-

16. KEY

Approval Designator (F)	Reason for Transmittal (G)		Disposition (H) & (I)	
E, S, Q, D or N/A (see WHC-CM-3-5, Sec.12.7)	1. Approval 2. Release 3. Information	4. Review 5. Post-Review 6. Dist. (Receipt Acknow. Required)	1. Approved 2. Approved w/comment 3. Disapproved w/comment	4. Reviewed no/comment 5. Reviewed w/comment 6. Receipt acknowledged

17. SIGNATURE/DISTRIBUTION
(See Approval Designator for required signatures)

(G) Reason	(H) Disp.	(J) Name	(K) Signature	(L) Date	(M) MSIN	(G) Reason	(H) Disp.	(J) Name	(K) Signature	(L) Date	(M) MSIN
2	1	Design Authority	JW Bailey	7/24/98	S2-48						
		Design Agent	MC Davenport	7/25/98							
2	1	Cog.Eng.	~~GE Graves~~ MC Davenport		S2-48						
2	1	Cog. Mgr.	JW Bailey	7/24/98	S2-48						
		QA									
		Safety									
		Env.									

18. MC Davenport ~~G.E. Graves~~ ~~7/24/98~~ MC Davenport 7/25/98 Signature of EDT Originator Date	19. Authorized Representative for Receiving Organization Date	20. JW Bailey ~~J.W. Bailey~~ ~~7/24/98~~ 7/24/98 Design Authority/ Cognizant Manager Date	21. DOE APPROVAL (if required) Ctrl. No. [] Approved [] Approved w/comments [] Disapproved w/comments

BD-7400-172-2 (05/96) GEF097

BD-7400-172-1

Project W-320, 241-C-106 Sluicing Piping Calculations, Vol. 7

John W. Bailey
Numatec Hanford Co., Richland, WA 99352
U.S. Department of Energy Contract DE-AC09-96RL13200

EDT/ECN: 622235 UC: 506
Org Code: 8C452 Charge Code: D2991/HANA0600
B&R Code: EW3130010 Total Pages: 228

Key Words: W-320, Sluicing, Tank 241-C-106, Tank 241-AY-102, WRSS, calculations, piping.

Abstract: This supporting document has been prepared to make the FDNW calculations for Project W-320, readily retrievable.

Product cut sheets in this document have been reviewed and are not Copyrighted.

TRADEMARK DISCLAIMER. Reference herein to any specific commercial product, process, or service by trade name, trademark, manufacturer, or otherwise, does not necessarily constitute or imply its endorsement, recommendation, or favoring by the United States Government or any agency thereof or its contractors or subcontractors.

Printed in the United States of America. To obtain copies of this document, contact: Document Control Services, P.O. Box 950, Mailstop H6-08, Richland WA 99352, Phone (509) 372-2420; Fax (509) 376-4989.

Kara L. Broz 7/29/98
Release Approval Date

DATE HANFORD RELEASE ID: 58
STA: 4
JUL 30 1998
Release Stamp

Approved for Public Release

Project W-320, 241-C-106 Sluicing Piping Calculations, Vol. 7

TABLE OF CONTENTS

Calc. No.	Title	Page
W320-27-044	Sluicer Nozzle Force Analysis	A-i
W320-27-045	Pipe Drain Flow and Anti-Siphon Sizing for Transfer Lines	B-i
W320-27-046	Flushing Nozzle Lifting Force	C-i
W320-27-047	W-320 Pit Volumes and In-Out Areas	D-i

W320-27-044

Sluicer Nozzle Force Analysis

FLUOR DANIEL NORTHWEST	CALCULATION IDENTIFICATION AND INDEX	Page i of ii Date 1 / 7 / 1997

This sheet shows the status and description of the attached Design Analysis sheets.

Discipline 27, Piping and Vessels WO/Job No. W320/ER9142 Calculation No. W320-27-044

Project No. & Name Project W-320 Waste Retrieval for Tank 241-C-106

Calculation Item SLUICER NOZZLE FORCE ANALYSIS

These calculations apply to:

Dwg. No. H-2-818551 and H-2-818555 Rev. No. 1

Dwg. No. . Rev. No. 1

Other (Study, CDR) Rev. No.

The status of these calculations is:

- ☐ Preliminary Calculations
- ☒ Final Calculations supersedes calc. W320-27-033
- ☐ Check Calculations (On Calculation Dated)
- ☐ Void Calculation (Reason Voided)

Incorporated in Final Drawings? ☒ Yes ☐ No

This calculation verified by independent "check" calculation? ☐ Yes ☒ No

Original and Revised Calculation Approvals:

	Rev. 0 Signature / Date	Rev. 1 Signature / Date	Rev. 2 Signature / Date
Originator	Dennis L. Stow 1-17-97		
Checked by	01-17-97		
Approved by	01-17-97		
Checked Against Approved Vendor Data	R. Ahmed 4.11.98		

INDEX

Design Analysis Page No.	Description
i	Calculation Identification and Index
ii	Calculation Cross Index
1	Objective, Design Inputs, Assumptions, Method of Analysis and References
2-3	Calculations
3	Conclusion

CALCULATION CROSS INDEX (Typical)

Subject Calculation No. W320-27-044

Subject Calculation Revision No.	Superceded by Calculation No.	These interfacing calculation/documents provide input to the subject calculation, and if revised may require revision of the subject calculation.		Results and conclusions of the subject calculation are used in these interfacing calculations and/or documents.		Does the output interface calculation/ documents require revision?		Has the output interface calculation/ documents been revised?		Discipline manager's signature and date indicating evaluation complete.	
		Calcualtion/Document No.	Revision. No.	Calcualtion/Document No.	Revision. No.	Yes	No	Yes	No		

KEH 1975.00 (12/88)

Client: NUMATEC HANFORD COMPANY
Subject: SLUICER NOZZLE FORCE ANALYSIS
PROJECT W-320 WASTE RETRIEVAL for TANK 241-C-106
Location: C TANK FARM - HANFORD 200 EAST AREA

WO/Job No.: W-320/ E09142
Date: 1 / 7 / 97
Checked: 01 / 17 / 97
Revised:

Filename: nozzle.mcd
By: D.L. STONE
By: N. J. JUPLO
By:

OBJECTIVE:

The objective of this calculation is to calculate the hydraulic forces imposed at the sluicer nozzle.

DESIGN INPUTS:

1. Project W320, Tank 241-C-106 Sluicing, Functional Design Criteria (WHC document No. WHC-SD-W320-FDC-001, Rev. 2).
2. Project W-320 Drawing # H-2-818551, Rev.1

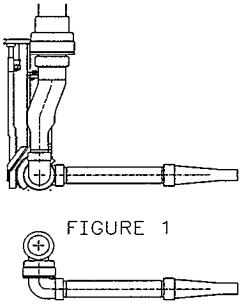

FIGURE 1

ASSUMPTIONS:

None

METHOD of ANALYSIS:

Bernoulli's Momentum equation for steady flow.

Calculations performed by *Mathcad 6.0*, MathSoft, Inc.

REFERENCES:

1. Project W320, Tank 241-C-106 Sluicing, Functional Design Criteria (WHC document No. WHC-SD-W320-FDC-001, Rev. 2).
2. *Engineering Fluid Mechanics*, J.A. Roberson & C.T. Crowe, 4th Edition, 1990
3. Crane Technical Paper No. 410, *Flow of Fluids Through Pipes, Fittings and Valves, 25th Printing, 1988*
4. Project W-320 Drawing # H-2-818551, Rev.1
5. Project W-320 Drawing # H-2-818555, Rev.1

DATA:

Unit Initialization : centipoise $cp := 0.01 \cdot poise$ $g = 32.174 \cdot \frac{ft}{sec^2}$ $gpm := \frac{gal}{min}$

$SG := 1.12$	Specific Gravity (10% solids loading)	(Ref. 1)
$Q := 350 \cdot gpm$	Flowrate	(Ref. 1)
$\rho_{H2O} := 62.4 \cdot \frac{lb}{ft^3}$	Mass Density of Water at Temperature Shown	(Ref. 3)
$d_1 := 2.5 \cdot in$	Bend (Swivel) ID and Nozzle entrance diameter	(Ref. 4 & 5)
$d_2 := 1.00 \cdot in$	Nozzle exit diameter	(Ref. 4)

Client: NUMATEC HANFORD COMPANY
Subject: SLUICER NOZZLE FORCE ANALYSIS
PROJECT W-320 WASTE RETRIEVAL for TANK 241-C-106
Location: C TANK FARM - HANFORD 200 EAST AREA

WO/Job No.: W-320/ E09142
Date: 1 / 7 / 97
Checked: 01 / 17 / 97
Revised:

Filename: nozzle.mcd
By: D.L. STONE
By: H.J. JUPLO
By:

CALCULATIONS:

$\rho := SG \cdot \rho_{H2O}$ $\quad \rho = 69.888 \cdot \frac{lb}{ft^3}$ Mass Density of Process Fluid

$\gamma := \rho \cdot g$ $\quad \gamma = 69.888 \cdot \frac{lbf}{ft^3}$ Fluid Specific Weight

$A_1 := \frac{\pi \cdot d_1^2}{4}$ $\quad A_1 = 0.034 \cdot ft^2$ Nozzle entrance flow area

$A_2 := \frac{\pi \cdot d_2^2}{4}$ $\quad A_2 = 0.005 \cdot ft^2$ Nozzle exit flow area

$V_1 := \frac{Q}{A_1}$ $\quad V_1 = 22.876 \cdot \frac{ft}{sec}$ Nozzle entrance velocity (Ref. 2, pg. 115)

$V_2 := \frac{Q}{A_2}$ $\quad V_2 = 142.974 \cdot \frac{ft}{sec}$ Nozzle exit velocity (Ref. 2, pg. 115)

Energy dissipated by the Nozzle is found from the conservation of mass and energy as applied in the Bernoulli Equation:

$$\frac{P_1}{\gamma} + \frac{V_1^2}{2 \cdot g} + z_1 = \frac{P_2}{\gamma} + \frac{V_2^2}{2 \cdot g} + z_2$$ (Ref. 2, pg. 169)

$$A_1 \cdot V_1 = A_2 \cdot V_2 = Q$$

$$z_1 = z_2$$

$$\left(\frac{P_1 - P_2}{\gamma}\right) = \left(\frac{V_2^2 - V_1^2}{2 \cdot g}\right)$$

$$\Delta P := \left(\frac{V_2^2 - V_1^2}{2 \cdot g}\right) \cdot \gamma \qquad \Delta P = 150.23 \cdot psi$$

Since $P_2 := 0 \cdot psi$ --> $P_1 := \Delta P - P_2$ $\quad P_1 = 150.23 \cdot psi$

Momentum equation for forces on a nozzle (Ref. 2, pg. 221)

$\Sigma F = \Sigma \Delta M$

$$\Sigma F_x = 0 = F_{nozzle} + P_1 \cdot A_1 - P_2 \cdot A_2 + \rho \cdot Q \cdot V_1 - \rho \cdot Q \cdot V_2$$

$$-F_{nozzle} := \rho \cdot Q \cdot (V_1 - V_2) + P_1 \cdot A_1 - P_2 \cdot A_2 \qquad F_{nozzle} = \cancel{-940.874} \rightarrow 532.53 \cdot lbf$$

JPL 4/10/98

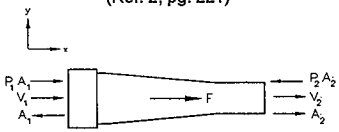

FIGURE 2

For 90° bend:

$A_1 := \frac{\pi \cdot d_1^2}{4}$ $\quad A_1 = 0.034 \cdot ft^2$ Bend entrance flow area (Ref. 5)

$A_2 := A_1$ $\quad A_2 = 0.034 \cdot ft^2$ Bend exit flow area

$V_1 := \frac{Q}{A_1}$ $\quad V_1 = 22.876 \cdot \frac{ft}{sec}$ Bend entrance velocity

$V_2 := \frac{Q}{A_2}$ $\quad V_2 = 22.876 \cdot \frac{ft}{sec}$ Bend exit velocity

$P_2 := P_1$ $\quad P_1 = 150.23 \cdot psi$

$\Sigma F = \Delta M$

$F_{bend} + P_1 \cdot A_1 - P_2 \cdot A_2 = \rho \cdot V_1 \cdot (V_1 \cdot A_1) + \rho \cdot V_2 \cdot (V_2 \cdot A_2)$ (Ref. 2, pg. 223)

$\Sigma F_x = 0 = R_x - P_2 \cdot A_2 \overset{-}{\cancel{+}} \rho \cdot Q \cdot V_2$

$R_x := P_2 \cdot A_2 \overset{+}{\cancel{-}} \rho \cdot Q \cdot V_2$ $\quad R_x = \overset{774.2}{\cancel{698.692}} \cdot lbf$ DLS 4/10/98

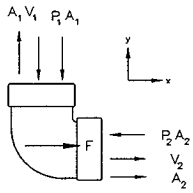

FIGURE 3

$\Sigma Fy = 0 = -R_y - P_1 \cdot A_1 - \rho \cdot Q \cdot V_2$

$-R_y := P_1 \cdot A_1 + \rho \cdot Q \cdot V_1$ $\quad R_y = \overset{-}{776.19} \cdot lbf$

774 + (-532)

$R_{Total} := R_x + F_{nozzle}$ $\quad R_{Total} = \overset{+}{\cancel{-}}242.181 \cdot lbf$

DLS 4/10/98

CONCLUSION:

The total force applied at the sluicer nozzle will be 242.181 lbf.

DLS

W320-27-045

Pipe Drain Flow and Anti-Siphon
Sizing for Transfer Lines

FLUOR DANIEL NORTHWEST	CALCULATION IDENTIFICATION AND INDEX	Page i of iii Date 3 / 5 /1997

This sheet shows the status and description of the attached Design Analysis sheets.

Discipline 27, Piping and Vessels WO/Job No. W320/E09141 Calculation No. W320-27-045

Project No. & Name Project W-320 Waste Retrieval for Tank 241-C-106

Calculation Item Pipe Drain Flow and Anti-Siphon Sizing for Transfer Lines

These calculations apply to:

Dwg. No. H-2-818498, Sh. 3, H-2-818531, Sh. 2 Rev. No. 0

Dwg. No. Rev. No.

Other (Study, CDR) Rev. No.

The status of these calculations is:

- ☐ Preliminary Calculations
- ☒ Final Calculations
- ☐ Check Calculations (On Calculation Dated)
- ☐ Void Calculation (Reason Voided)

Incorporated in Final Drawings? ☐ Yes ☒ No

This calculation verified by independent "check" calculation? ☐ Yes ☒ No

Original and Revised Calculation Approvals:

	Rev. 0 Signature / Date	Rev. 1 Signature / Date	Rev. 2 Signature / Date
Originator	Danny Evans 3/25/97		
Checked by	Danny L. Evans 3/25/97 Mitchell D. Bartlett 3/25/97		
Approved by	Danny L. Evans 3/25/97		
Checked Against Approved Vendor Data	N. Ahmed 4.11.98		

INDEX

Design Analysis Page No.	Description
i - ii	Calculation Identification and Index
iii	Calculation Cross Index
1	Objective, Design Inputs, Assumptions, Method of Analysis
2-3	Method of Analysis, (cont..)
5-6	Conclusions
6-7	References
8	Conclusions - Drain Times Summary Spreadsheet
9 - 25	Calculations

FLUOR DANIEL NORTHWEST	CALCULATION IDENTIFICATION AND INDEX	Page ii of iii Date 3 / 5 /1997

This sheet shows the status and description of the attached Design Analysis sheets.

Discipline 27,Piping and Vessels WO/Job No._EO9141_ Calculation No. W-320-27-045

	Rev. 0 Signature / Date	Rev. 1 Signature / Date	Rev. 2 Signature / Date
Originator	D. Stone 3/25/97		
Checked by	D.R. Evans 3/25/97		

INDEX

Design Analysis Page No.	Description
Appdx A	Calculation of headloss through Pump
Appdx B	Calculation of Size of Hole required to Break Siphon
Appdx C	Headloss Curve for Micromotion Mass Flow Meter
Appdx D	Station Points
Appdx E	PIPE-FLO Model for Siphoning of 10% Solids Slurry
Appdx F	PIPE-FLO Model for Draining of 10% Solids Slurry
Appdx G	PIPE-FLO Model for Siphoning of 30% Solids Slurry
Appdx H	PIPE-FLO Model for Draining of 30% Solids Slurry
Appdx I	PIPE-FLO Model for Siphoning of 0% Solids Supernate
Appdx J	PIPE-FLO Model for Draining of 0% Solids Supernate
Appdx K	PIPE-FLO Model for Siphoning of 10% Solids Supernate
Appdx L	PIPE-FLO Model for Draining of 10% Solids Supernate
Appdx M	Vendor Data Sheets
Appdx N	Drawings

CALCULATION CROSS INDEX (Typical)

Subject Calculation No. W320-27-045

Subject Calculation Revision No.	Superceded by Calculation No.	These interfacing calculation/documents provide input to the subject calculation, and if revised may require revision of the subject calculation.		Results and conclusions of the subject calculation are used in these interfacing calculations and/or documents.		Does the output interface calculation/ documents require revision?		Has the output interface calculation/ documents been revised?		Discipline manager's signature and date indicating evaluation complete.	
		Calcualtion/Document No.	Revision. No.	Calcualtion/Document No.	Revision. No.	Yes	No	Yes	No		
		Dwg. H-2-818495, Sh.1	1				X		X	X	
		Dwg. H-2-818536, Sh.1	0								
		Dwg. H-2-818498, Sh.2	1								
		Dwg. H-2-818498, Sh. 3	0								
		Dwg. H-2-818427, Sh.1	0								
		Dwg. H-2-818426, Sh.1 & 2	0								
		Dwg. H-2-818434, Sh.1	0								
		Dwg. H-2-818494, Sh.1 & 2	0								
		Dwg. H-2-818508, Sh.1	1							7/1/98	D.L. Evans
		Dwg. H-2-818505, Sh.1	1								
		Dwg. H-2-818501, Sh.1 & 2	2								
		Dwg. H-2-818501, Sh.1	0								
		Dwg. H-2-818537, Sh.2	1								
		Dwg. H-2-818503, Sh.1	1								
		Dwg. H-2-818515, Sh.1	~~0~~ 1								
		Dwg. H-2-818551, Sh.2 & 4	1								
		Dwg. H-2-818551, Sh.7	1								
		Dwg. H-2-818549, Sh.1	0				X		X	X	

Client NUMATEC HANFORD COMPANY
Subject PROJECT W-320 WASTE RETRIEVAL for TANK 241-C-106
Pipe Drainflow and Anti-Siphon Sizing for Transfer Lines
Location C TANK FARM - HANFORD 200 EAST AREA

WO/Job No. E09141
Date 3 / 5 / 97
Checked 3/25/97
Revised

Filename siphon\text.mcd
By D.L. STONE DLS
By D.L. EVANS
By

OBJECTIVE:

The objective of this calculation is twofold.

1. To determine if the anti-siphoning holes required to interrupt siphon flow in either the Slurry or Supernate Pipelines are adequately sized.

2. To estimate the time required to drain the lines after termination of flow.

DESIGN INPUTS:

Project W320, Tank 241-C-106 Sluicing, *Functional Design Criteria* (WSC document No. WHC-SD-W320-FDC-001, Rev. 4)

ASSUMPTIONS:

1. The pressure drops across the de-energized pumps were derived for water and adequately model pressure drops for other system fluids.

2. The valve Cv values used were for water and the resulting pressure drops adequately model those for other system fluids .

3. A fluid temperature of 70°F has been chosen to conservatively approximate the temperature at which siphoning and line draining would most probably take place.

METHOD of ANALYSIS:

Calculations performed using *Mathcad 6.0*, MathSoft, Inc. are shown with sources noted adjacent to formulas.

Methods used in spreadsheet calculations performed by *Microsoft "Excel"* Version 5.0 are either summations, or methods and sources are shown on a previous page, using *Mathcad 6.0.*

Hydraulic calculations are performed by *PIPE-FLO*, v.5, by Engineered Software, Inc. Ref. 14

The PIPE-FLO program calculates the balanced flow rates and pressures within fluid piping systems using the Darcy-Weisbach equation, which takes into account fluid viscosity and pipe roughness.

(METHOD of ANALYSIS, *cont...*)

The Darcy-Weisbach equation is as follows: $\Delta P = \rho \cdot f \cdot \left(\frac{L}{D}\right) \cdot \frac{v^2}{2 \cdot g}$ where

ΔP = pressure drop
ρ = fluid density
f = Darcy friction factor
L = length of pipe
D = pipe diameter
v = mean fluid velocity
g = gravitational constant

For both laminar and non-laminar flow, the friction factor , f , is a function of the Reynolds number, calculated by PIPE-FLO using the equation:

$$R_e = \frac{354 \cdot W}{\mu \cdot d}$$

where

W = flow rate, kg/hr
d = pipe diameter, mm
μ = fluid dynamic viscosity, centipoise

If PIPE-FLO calculates a Reynolds number less than 2100, flow is considered to be laminar and the friction factor is expressed using the equation:

$$f = \frac{64}{R_e}$$

For Reynolds numbers greater than 2100, flow is considered to be turbulent, and the following equation is used:

$$f = \frac{1.325}{\left(\ln\left(\frac{\varepsilon}{3.7 \cdot d} + \frac{5.7}{R_e^{0.9}}\right)\right)^2}$$

ε = coefficient of absolute roughness for pipe

PIPE-FLO includes valves and fittings in the calculation using the pipe resistance coefficients (K factors) found in Crane Technical Paper No. 410.

The relationship between the K value and pipe length is: $K = f_T \cdot \left(\frac{L}{D}\right)$ where f_T = turbulent friction factor

for which PIPE-FLO uses $f_T = 8 \cdot \left(2.457 \cdot \ln\left(\frac{3.707 \cdot d}{\varepsilon}\right)\right)^{-2}$

(METHOD of ANALYSIS, *cont...*)

Calculation of the balanced flow rates in the system is carried out using the Simultaneous Path Adjustment method developed by Don J. Wood of the University of Kentucky. This method uses the Hardy Cross method until the program is close to a solution, then it switches to the linear method to complete the calculations. Information on the Hardy Cross method can be found in Ref 3. The continuity equations and loop pressure drop equations, based on Kirchoff's Laws 1 and 2, provide the independent equations to perform the linear portion of the calculations.

The PIPE-FLO program requires information about fluid properties in order to analyze a piping system. This calculation includes the hydraulic analysis of both the Slurry Transfer Line, estimated to contain at the time of siphoning, a liquid ranging from 10% to 30% solids content, and the Supernate Transfer or "Sluice" Line, containing an estimated 0% to 10% solids content. Mass densities and viscosities corresponding to solids content are calculated on page 9, using relative specific gravities and viscosity adjustment equations specified in the Project Functional Design Criteria (Ref. 1).

Pumps and other components for which headloss varies with flowrate are represented within PIPE-FLO as curves, which have been independently determined and manually input to the program.

Because this calculation addresses only siphoning and drainage scenarios, flow vs.head curves have been developed to account for the headlosses resulting from either forward or reverse flow through the system pumps in non-operational mode. The independent calculation modeling these curves is included as Appendix A of this calculation. Similar curves have been developed to model losses through the Micromotion Mass Flow Meter in the Slurry line, and for the flow monitor located adjacent to the nozzle on the sluice line. The development of these curves is shown on Pages 10 through 14 of this calculation, using manufacturer's graphs shown in Appendix C. Curves developed for input to PIPE-FLO are summarized in spreadsheet form on page 15.

Standard fittings have been input directly to the system model from a table of standard fittings included in the PIPE-FLO program. Purex connectors are modeled as standard 90 degree miter bends. System valves are considered by PIPE-FLO as specialty valves and have been input to the model using manufacturer-specified CV values obtained from vendor data (included in Appendix M.)

The Differential Pressure Calculator in PIPE-FLO uses the formula: $K = \frac{891 \cdot d^4}{C_v^2}$

to calculate friction loss coefficient, or K value, for input to the model.

Input to the system model is described in terms of Node and Pipe names, elevations, dimensions and components in the Identification and Configuration section of this calculation on pages 16 through 24. Although Node points are normally determined by pipe diameter changes, Nodes have been included at the following additional locations in order to facilitate the objectives of this analysis.

(METHOD of ANALYSIS, *cont...*)

1. Nodes have been placed at the locations of holes drilled in the pipe to provide the inlet of air to prevent siphoning.

2. Nodes have been placed at elevations corresponding to transfer line station points identified in the project profile drawings included in Appendix D.

Pipe Draining

The times required to drain the Slurry and Sluice pipelines have been determined using flow results from the PIPE-FLO program. Pipe drain flows were derived by modeling simulated reservoirs at the pipe high point and at an elevation representing the top of the lower third of the transfer line. The PIPE-FLO models were then run to determine the steady state pipe flows for fluids at various % solids and are included as Appendices F, H, J & L . These drain flows were then used to determine:

a) The time to void the top 2/3 of the pipe, by using the average steady state drain flow from the two reservoirs.

b) The time to void the lower third, by using the drain flow from the lower reservoir.

The respective pipe flows and times required to drain the pipes are listed in the conclusion section.

Siphon Flows

Siphon flows have been determined using the PIPE-FLO program, and models included in Appendices E, G, I & K . Flows were derived by modelling reservoirs at locations that maximize the hydraulic head available to drive the siphon. The reservoirs were placed as follows:

Slurry Line: The top reservoir located at the AY-102's maximum liquid level. The lower reservoir located at the lowest liquid level for C-106.

Supernate Line: The top reservoir located at the AY-102's maximum liquid level. The lower reservoir located at the lowest level of the sluice nozzle in C-106.

The siphon models were run to determine steady state flows. Since PIPE-FLO does not provide for two-phase flow analysis, the models did not include openings at the locations of the holes drilled in the pipe to provide the inlet of air to prevent siphoning.

Nodes have been assigned at the locations of these holes and the corresponding siphon flows and fluid pressures are listed in the conclusion section of the calculation.

CONCLUSIONS

The following results are taken from the Summary Table (Page 8) and Air Flow calculations, Appendix B.

	Drain Time (min)	Drain Flow (gpm)	Drain Flow (ACFM)	Siphon Flow (gpm)	Siphon Flow (ACFM)	Fluid Pressure at Hole Elev. (psig)	Anti-Siphon Hole Air Flow (SCFM)
Slurry Line							
10% Solids	7.88	150.9	20.17	112	14.97	(-) 6.159	49.33
30% Solids	8.75	141.5	18.92	81.03	10.83	(-) 6.656	49.54
Sluice Line							
0% Solids	12.35	86.78	11.6	75.41	10.08	(-) 3.917	11.23
10% Solids	12.73	84.96	12.43	71.98	9.62	(-) 4.368	11.58

then 1 open hole of 2 on each line
DLE 2/10/98

Drain Times

From the above table the slurry line will free drain in 7.88 min to 8.75 min depending on solids content. The sluice line will free drain in 12.35 min to 12.73 min depending on solids content.

Hole sizing for Siphon Prevention

Slurry Line

The slurry line normally flows from C-106 to AY-102 and contains two 1/2" diameter holes located approximately 12' above the AY-102 maximum tank liquid level. When power is removed from the pumps, flow will slow, reverse itself, and begin siphoning from AY-102. The siphon may be broken before the siphon flow derived by the model is attained. From the model, maximum stable siphon flow is 112 gpm (14.97 cfm) with a (-) 6.159 psig fluid pressure at the elevation of the anti-siphon holes. With a (-) 6.159 psig, across the holes, the line will aspirate 49.33 cfm of air, from Appendix B. This volume of air will displace all forward flowing fluid and allow the column of fluid in the leg from the tank to settle to some equilibrium level below the holes. The siphon will be broken. The maximum air flow required to support free draining is 14.97 cfm. From Appendix B, 14.97 cfm of air requires a pressure drop of 0.315 psig across the 1/2" anti-siphon holes.

Sluice Line

The sluice line normally flows from AY-102 to C-106 and contains two 1/4" diameter anti-siphon holes located approximately 8' above the AY-102 maximum tank liquid level. When power is removed from the pumps, flow will slow and decay to the modelled siphon rate from AY-102. The siphon may be broken before the flow derived by the model is attained. From the model, maximum stable siphon flow is 75.41 gpm (10.08 cfm) with a (-) 3.917 psig fluid pressure at the drilled hole location. With a (-) 3.917 psig, across the holes, the line will aspirate 11.23 cfm of air, from Appendix B. This volume of air will displace all forward flowing fluid and allow the column of fluid in the leg from the tank to settle to some equilibrium level. The siphon will be broken. The maximum air flow required to support free draining is 10.08 cfm. From Appendix B, 10.08 cfm of air requires a pressure drop of 2.83 psig across the 1/4" anti-siphon holes.

The 1/4" and 1/2" holes are of sufficient size to break the siphon flows and support free draining of the slurry and sluice lines.

REFERENCES

1. Project W320, Tank 241-C-106 Sluicing, *Functional Design Criteria* (WSC document No. WHC-SD-W320-FDC-001, Rev. 4)
2. *Centrifugal and Axial Flow Pumps*, A.J. Stepanoff, 2nd Edition, 1957
3. *Fluid Mechanics*, Victor L. Streeter
4. *Engineering Fluid Mechanics*, J.A. Roberson & C.T. Crowe, 4th Edition, 1990
5. *Process Heat Transfer*, McGraw-Hill, D.Q.Kern, 1990.
6. Crane Technical Paper No. 410, *Flow of Fluids Through Pipes, Fittings and Valves, 25th Printing, 1988*
7. TUBE TURN Welding Fittings and Flanges, Catalog 311, 1954
8. PBM *Reference Book, Section II SP Series* , 1992 PBM, Inc. Rev 2/92 -LT-8D
9. PBM *Reference Book, Section IV MP Series* , 1992 PBM, Inc. Rev 2/92 -LT-8D
10. *Control Valve Handbook, Fisher Controls Company*
11. T-M Swivel Joint Catalog.
12. *"Mathcad" Version 6.0*, MathSoft, Inc.
13. *"Excel"* Version 5.0, by Microsoft
14. *"PIPE-FLO"* Version 5.0, by Engineered Software, Inc.

(REFERENCES, cont...)

15. Project W-320 Drawings:

General:

15.0 H-2-818495, Sh. 1 Pump and Winch Assembly
15.1 H-2-818536, Sh. 1 Hydraulic Diagram
15.2 H-2-818498, Sh. 2 Shielding Plate
15.3 H-2-818498, Sh. 3 Shielding Plate
15.4 H-2-818427, Sh. 1 Transfer System Plan and Profile
15.5 H-2-818426, Sh. 1 Transfer System Plan and Profile
15.6 H-2-818426, Sh. 2 Transfer System Plan and Profile
15.7 H-2-818434, Sh. 1 Transfer System Plan and Profile

Slurry Line:

15.8 H-2-818494, Sh. 1 Pump and Winch Installation - C-Tank
15.9 H-2-818508, Sh. 1 Jumper Assembly Pit C-06A (Pump Jumper)
15.10 H-2-818505, Sh. 1 Jumper Assembly Pit C-06A (Jumper)
15.11 H-2-818501, Sh. 1 Jumper Assembly Pit C-02A (Distributor Jumper)
15.12 H-2-818501, Sh. 2 Jumper Assembly Pit C-02A (Distributor Jumper)
15.13 H-2-818537, Sh. 1 Distributor Assembly
15.14 H-2-818537, Sh. 2 Distributor Assembly

Supernate Line:

15.15 H-2-818494, Sh. 2 Pump and Winch Installation - AY-Tank
15.16 H-2-818503, Sh. 1 Jumper Assembly Sluice Pit AY-02E (Pump Jumper)
15.17 H-2-818515, Sh. 1 Jumper Assembly Sluice Pit C-06C (Sluicer Jumper)
15.18 H-2-818551, Sh. 2 Sluicer Assembly Details (Swivel)
15.19 H-2-818551, Sh. 4 Piping Sluicer Assembly Feedplate
15.20 H-2-818551, Sh. 7 Sluicer Assembly Details (Nozzle)
15.21 H-2-818549, Sh. 1 Sluicer Installation

FLUOR DANIEL
NORTHWEST

DESIGN ANALYSIS

Calc. No. W-320-27-045
Revision No. 0
Page No. 8 of 25

Client NUMATEC HANFORD COMPANY
Subject PROJECT W-320 WASTE RETRIEVAL for TANK 241-C-106
PIPE DRAINFLOW and ANTI-SIPHON SIZING FOR TRANSFER LINES
Location C TANK FARM 200 EAST AREA

WO/Job No. EO9141
Date 3 / 5 / 1997
Checked 3/25/97
Revised

Filename draintime.xls
By D. L. STONE DLS
By D. L. EVANS DLE
By

SUMMARY OF DRAIN TIMES (For calculation details, see Page 25)

Pipe #	Pipe ID (in)	Area (in^2)	Length (ft)	Volume (gal)	Volume (ft^3)	Drainflow Highoint to End (gpm)	Drainflow Lowpoint to End (gpm)	Average Drainflow (ft^3 / min)	Average Time to Drain (min)
Slurry Line		10% Solids							
3.3	4.03	12.73	843.20	557.58	74.54	146.7	150.9	19.89	3.75
3.2	4.03	12.73	468.10	309.54	41.38	146.7	150.9	19.89	2.08
3.1	4.03	12.73	427.61	282.76	37.80		150.9	20.17	1.87
3	3.07	7.39	4.767	1.83	0.24		150.9	20.17	0.012
2.1	4.03	12.73	1.0	0.66	0.09		150.9	20.17	0.004
2	4.03	12.73	34.86	23.05	3.08		150.9	20.17	0.153
1	3.07	7.39	2.32	0.89	0.12		150.9	20.17	0.006
0	5.05	20.01	0.442	0.46	0.06		150.9	20.17	0.003
			1782.3				Time to Drain in minutes :		7.88
Slurry Line		30% Solids							
3.3	4.03	12.73	843.20	557.58	74.54	122.7	141.5	17.66	4.22
3.2	4.03	12.73	468.10	309.54	41.38	122.7	141.5	17.66	2.34
3.1	4.03	12.73	427.61	282.76	37.80		141.5	18.92	2.00
3	3.07	7.39	4.767	1.83	0.24		141.5	18.92	0.013
2.1	4.03	12.73	1.0	0.66	0.09		141.5	18.92	0.005
2	4.03	12.73	34.86	23.05	3.08		141.5	18.92	0.163
1	3.07	7.39	2.32	0.89	0.12		141.5	18.92	0.006
0	5.05	20.01	0.442	0.46	0.06		141.5	18.92	0.003
							Time to Drain in minutes :		8.75
Sluicer Line		0% Solids							
4.1	4.03	12.73	822.80	544.09	72.73	105.6	86.78	12.86	5.66
4.2	4.03	12.73	468.10	309.54	41.38	105.6	86.78	12.86	3.22
4.3	4.03	12.73	428.70	283.48	37.90		86.78	11.60	3.27
4.4	4.03	12.73	26.27	17.37	2.32		86.78	11.60	0.200
5	2.47	4.79	1.231	0.31	0.04		86.78	11.60	0.004
6	2.07	3.36	0.667	0.12	0.02		86.78	11.60	0.001
7	2.47	4.79	1.203	0.30	0.04		86.78	11.60	0.003
8	2.47	4.79	0.604	0.15	0.02		86.78	11.60	0.002
9	0.96	0.72	0.271	0.01	0.00		86.78	11.60	0.000
			1749.8				Time to Drain in minutes :		12.35
Sluicer Line		10% Solids							
4.1	4.03	12.73	822.80	544.09	72.73	101	84.96	12.43	5.85
4.2	4.03	12.73	468.10	309.54	41.38	101	84.96	12.43	3.33
4.3	4.03	12.73	428.70	283.48	37.90		84.96	11.36	3.34
4.4	4.03	12.73	26.27	17.37	2.32		84.96	11.36	0.204
5	2.47	4.79	1.231	0.31	0.04		84.96	11.36	0.004
6	2.07	3.36	0.667	0.12	0.02		84.96	11.36	0.001
7	2.47	4.79	1.203	0.30	0.04		84.96	11.36	0.004
8	2.47	4.79	0.604	0.15	0.02		84.96	11.36	0.002
9	0.96	0.72	0.271	0.01	0.00		84.96	11.36	0.000
							Time to Drain in minutes :		12.73

Calculation of Mass Density and Dynamic Viscosity based on Percent Solids

$T := 70 \cdot F$ Operating Temperature (See Assumption 2)

$\rho_{H2O} := 62.305 \cdot \frac{lb}{ft^3}$ Water Density at Temperature Shown (Ref. 6)

$\mu_T = \mu_{\%} \cdot (1 - 0.005 \cdot (T - 68))$ Temperature adjustment equation from FDC (Ref. 1)

$SG := 1.0$ Specific Gravity (0% solids loading) **(Water)** (Ref. 1)

$\rho := SG \cdot \rho_{H2O}$ $\rho = 62.305 \cdot \frac{lb}{ft^3}$ Process Fluid Density

$\mu_{0\%} := 4 \cdot cp$ Viscosity at **68** degrees F (0% solids loading)

$\mu_{0\%70} := \mu_{0\%} \cdot (1 - 0.005 \cdot (70 - 68))$ $\mu_{0\%70} = 3.96 \cdot cp$ Viscosity at **0% Solids, 70** degrees F

$SG := 1.12$ Specific Gravity (**10%** solids loading) (Ref. 1)

$\rho := SG \cdot \rho_{H2O}$ $\rho = 69.782 \cdot \frac{lb}{ft^3}$ Process Fluid Density

$\mu_{10\%} := 13 \cdot cp$ Viscosity at **68** degrees F

$\mu_{10\%70} := \mu_{10\%} \cdot (1 - 0.005 \cdot (70 - 68))$ $\mu_{10\%70} = 12.87 \cdot cp$ Viscosity at **10% Solids, 70** degrees F

$SG := 1.2$ Specific Gravity (**30%** solids loading) (Ref. 1)

$\rho := SG \cdot \rho_{H2O}$ $\rho = 74.766 \cdot \frac{lb}{ft^3}$ Process Fluid Density

$\mu_{30\%} := 105 \cdot cp$ Viscosity at **68** degrees F

$\mu_{30\%70} := \mu_{30\%} \cdot (1 - 0.005 \cdot (70 - 68))$ $\mu_{30\%70} = 103.95 \cdot cp$ Viscosity at **0% Solids, 70** degrees F (Ref. 1)

Client NUMATEC HANFORD COMPANY
Subject PROJECT W-320 WASTE RETRIEVAL for TANK 241-C-106
Pipe Drainflow and Anti-Siphon Sizing for Transfer Lines
Location C TANK FARM - HANFORD 200 EAST AREA

WO/Job No. E09141
Date 3 / 5 / 97
Checked 3/25/97
Revised

Filename micromtn.mcd
By D.L. STONE DLS
By D.L. EVANS DLE
By

Calculation of Flow vs Head Curve for Micromotion Mass Flowmeter (For Vendor Data, see Appendix M)

$SG := 1.12$ Specific Gravity for 10% Solids at 70°F

$\rho := SG \cdot \rho_{H2O}$ $\rho = 69.782 \cdot \frac{lb}{ft^3}$ Process Fluid Density (Ref. Pg. 7)

$\gamma := \rho \cdot g$ $\gamma = 69.782 \cdot \frac{lbf}{ft^3}$ Specific weight of fluid.

$\mu := 12.87 \cdot cp$ Viscosity at 10% solids (Ref. Pg. 7)

Volumetric Flowrate

$Q_{50} := 50 \cdot \frac{gal}{min}$ $Q_{150} := 150 \cdot \frac{gal}{min}$ $Q_{250} := 250 \cdot \frac{gal}{min}$ $Q_{350} := 350 \cdot \frac{gal}{min}$

Mass Flowrate corresponding to Micromotion graph

$m_{q50} := Q_{50} \cdot \rho$ $m_{q150} := Q_{150} \cdot \rho$ $m_{q250} := Q_{250} \cdot \rho$ $m_{q350} := Q_{350} \cdot \rho$

$m_{q50} = 466.422 \cdot \frac{lb}{min}$ $m_{q150} = 1.399 \cdot 10^3 \cdot \frac{lb}{min}$ $m_{q250} = 2.332 \cdot 10^3 \cdot \frac{lb}{min}$ $m_{q350} = 3.265 \cdot 10^3 \cdot \frac{lb}{min}$

Pressure Drop corresponding to Micromotion graph

$P_{50} := .34 \cdot psi$ $P_{150} := 1.8 \cdot psi$ $P_{250} := 4.5 \cdot psi$ $P_{350} := 8.3 \cdot psi$ (Ref. Appendix C)

$h_{50} := \frac{P_{50}}{\gamma}$ $h_{150} := \frac{P_{150}}{\gamma}$ $h_{250} := \frac{P_{250}}{\gamma}$ $h_{350} := \frac{P_{350}}{\gamma}$

$h_{50} = 0.702 \cdot ft$ $h_{150} = 3.714 \cdot ft$ $h_{250} = 9.286 \cdot ft$ $h_{350} = 17.128 \cdot ft$

Client NUMATEC HANFORD COMPANY
Subject PROJECT W-320 WASTE RETRIEVAL for TANK 241-C-106
Pipe Drainflow and Anti-Siphon Sizing for Transfer Lines
Location C TANK FARM - HANFORD 200 EAST AREA

WO/Job No. E09141
Date 3 / 5 / 97
Checked 3/25/97
Revised

Filename micromtn.mcd
By D.L. STONE DLS
By D.L. EVANS DLE
By

Calculation of Flow vs Head Curve for Micromotion Mass Flowmeter

$SG := 1.2$ Specific Gravity for **30%** Solids at 70°F

$\rho := SG \cdot \rho_{H2O}$ $\rho = 74.766 \cdot \frac{lb}{ft^3}$ Process Fluid Density (Ref. Pg. 7)

$\gamma := \rho \cdot g$ $\gamma = 74.766 \cdot \frac{lbf}{ft^3}$ Specific weight of fluid.

$\mu := 103.95 \cdot cp$ Viscosity at 30% solids (Ref. Pg. 7)

Volumetric Flowrate

$Q_{50} := 50 \cdot \frac{gal}{min}$ $Q_{150} := 150 \cdot \frac{gal}{min}$ $Q_{250} := 250 \cdot \frac{gal}{min}$ $Q_{350} := 350 \cdot \frac{gal}{min}$

Mass Flowrate corresponding to Micromotion graph

$m_{q50} := Q_{50} \cdot \rho$ $m_{q150} := Q_{150} \cdot \rho$ $m_{q250} := Q_{250} \cdot \rho$ $m_{q350} := Q_{350} \cdot \rho$

$m_{q50} = 499.738 \cdot \frac{lb}{min}$ $m_{q150} = 1.499 \cdot 10^3 \cdot \frac{lb}{min}$ $m_{q250} = 2.499 \cdot 10^3 \cdot \frac{lb}{min}$ $m_{q350} = 3.498 \cdot 10^3 \cdot \frac{lb}{min}$

Pressure Drop corresponding to Micromotion graph

$P_{50} := 1.2 \cdot psi$ $P_{150} := 4 \cdot psi$ $P_{250} := 10 \cdot psi$ $P_{350} := 17.5 \cdot psi$ (Ref. Appendix C)

$h_{50} := \frac{P_{50}}{\gamma}$ $h_{150} := \frac{P_{150}}{\gamma}$ $h_{250} := \frac{P_{250}}{\gamma}$ $h_{350} := \frac{P_{350}}{\gamma}$

$h_{50} = 2.311 \cdot ft$ $h_{150} = 7.704 \cdot ft$ $h_{250} = 19.26 \cdot ft$ $h_{350} = 33.705 \cdot ft$

Calculation of Headloss Curves for 18" Supernate Line Monitor Tube :

Given / Known Data:

$d := 2.469 \cdot in$ — Entrance Pipe Inner Diameter (Ref. 15.7, Sh.7)

$A := \frac{\pi \cdot d^2}{4}$ — Entrance Pipe Flow Area:

$L_{vein} := 1 \cdot in$ — Length of Monitor tube veins

$P_w := (\pi \cdot d) + 4 \cdot (2 \cdot L_{vein})$ $\quad P_w = 15.757 \cdot in$ — Wetted Perimeter of Piping (Ref. 5, Pg.105)

$A := \left(\frac{\pi \cdot d^2}{4}\right) - 4 \cdot \left[(1 \cdot in) \cdot \left(\frac{1}{8} \cdot in\right)\right]$ $\quad A = 4.288 \cdot in^2$ — Flow Area inside Monitor Tube

$D_e := \frac{4 \cdot A}{P_w}$ $\quad D_e = 1.088 \cdot in$ — Monitor Tube Equivalent diameter

$Q_i :=$ Flow Rate

350·GPM
250·GPM
150·GPM
50·GPM
.01·GPM

$v_i := \frac{Q_i}{A}$

$$v = \begin{bmatrix} 0 \\ 26.189 \\ 18.706 \\ 11.224 \\ 3.741 \\ 7.483 \cdot 10^{-4} \end{bmatrix} \cdot \frac{ft}{sec}$$ Velocity

Monitor Tube Losses at 10% Solids Loading:

$SG := 1.12$ — Specific Gravity (10% solids loading) (Ref. 1)

$\rho_{H2O} := 62.305 \cdot \frac{lb}{ft^3}$ — Water Density at 70° F (Ref. 6)

$\rho := SG \cdot \rho_{H2O}$ $\quad \rho = 69.782 \cdot \frac{lb}{ft^3}$ — Process Fluid Density

$\mu_{10\%} := 13$ — Viscosity for 10% solids fluid at 68 degrees F (Ref. 1)

$\mu_{10\%70} := \mu_{10\%} \cdot (1 - 0.005 \cdot (70 - 68))$ — Temperature adjustment equation from FDC (Ref. 1)

$\mu := \mu_{10\%70} \cdot cp$ $\quad \mu = 12.87 \cdot cp$ — Viscosity for 10% solids fluid at 50° F

(Monitor Tube, cont...)

$$Reynolds_i := \frac{D_e \cdot v_i \cdot \rho}{\mu}$$

$Reynolds_i$
$1.917 \cdot 10^4$
$1.369 \cdot 10^4$
$8.215 \cdot 10^3$
$2.738 \cdot 10^3$
0.548

Reynolds Number — Ref. 6, Eq 3-3

(Out of range for formula)

(Out of range for formula)

$D_e = 0.091 \cdot ft$

$k_s := .00015 \cdot ft$ — Roughness factor for pipe Smooth Commercial Pipe — (Ref. 4, Pg.419)

$$f_i := \frac{0.25}{\left(\log\left(\frac{k_s}{3.7 \cdot d} + \frac{5.74}{Reynolds_i}\right)\right)^2}$$

f_i
0.0229
0.0243
0.0269
0.0359
0.2401

Friction Factor (for $4 \times 10^3 < Re < 10^8$) — Ref. 4, Pg 424

(Out of range for formula) $f_{critical} := 0.045$

(Out of range for formula)

$\frac{k_s}{D_e} = 0.002$

$$h_{monitor_i} := (f_i) \cdot \left(\frac{18 \cdot in}{D_e}\right) \cdot \frac{(v_i)^2}{2 \cdot g}$$

(Ref 6, Page A-20)

$$h_{monitor} = \begin{bmatrix} 0 \\ 4.036 \\ 2.182 \\ 0.871 \\ 0.129 \\ 3.455 \cdot 10^{-8} \end{bmatrix} \cdot ft$$

$$h_{monitorC} := (f_{critical}) \cdot \left(\frac{18 \cdot in}{D_e}\right) \cdot \frac{\left(3.741 \cdot \frac{ft}{sec}\right)^2}{2 \cdot g}$$

$h_{monitorC} = 0.162 \cdot ft$

Monitor Tube Losses at 0% Solids Loading (Water):

Given / Known Data:

$SG := 1.0$ — Specific Gravity (0% solids loading) — (Ref. 1)

$\rho_{H2O} := 62.305 \cdot \frac{lb}{ft^3}$ — Water Density at **70° F** — (Ref. 6)

$\rho := SG \cdot \rho_{H2O}$ $\rho = 62.305 \cdot \frac{lb}{ft^3}$ — Process Fluid Density

(Monitor Tube, cont...)

$\mu_{0\%} := 4$ Viscosity for 0% solids fluid at 68 degrees F (Ref. 1)

$\mu_{0\%70} := \mu_{0\%} \cdot (1 - 0.005 \cdot (70 - 68))$ Temperature adjustment equation from FDC (Ref. 1)

$\mu := \mu_{0\%70} \cdot cp$ $\mu = 3.96 \cdot cp$ Viscosity for 10% solids fluid at 50° F

$Reynolds_i := \frac{D_e \cdot v_i \cdot \rho}{\mu}$ Reynolds Number Ref. 6, Eq 3-3

$Reynolds_i$
$5.562 \cdot 10^4$
$3.973 \cdot 10^4$
$2.384 \cdot 10^4$
$7.946 \cdot 10^3$
1.589

$D_e = 0.091 \cdot ft$

$k_s := .00015 \cdot ft$ Roughness factor for pipe Smooth Commercial Pipe (Ref. 4, Pg.419)

$f_i := \frac{0.25}{\left(\log\left(\frac{k_s}{3.7 \cdot d} + \frac{5.74}{Reynolds_i}\right)\right)^2}$ Friction Factor (for 4 x 10^3 < Re < 10^8) Ref. 4, Pg 424

f_i
0.0201
0.0208
0.0222
0.0271
0.8036

(Out of range for formula) $f_{critical} := 0.045$

(Out of range for formula)

$\frac{k_s}{D_e} = 0.002$

$h_{monitor_i} := (f_i) \cdot \left(\frac{18 \cdot in}{D_e}\right) \cdot \frac{(v_i)^2}{2 \cdot g}$ (Ref 6, Page A-20)

$h_{monitor_i}$
$3.551 \cdot ft$
$1.871 \cdot ft$
$0.717 \cdot ft$
$0.098 \cdot ft$
$1.156 \cdot 10^{-7} \cdot ft$

$h_{monitorC} := (f_{critical}) \cdot \left(\frac{18 \cdot in}{D_e}\right) \cdot \frac{\left(3.741 \cdot \frac{ft}{sec}\right)^2}{2 \cdot g}$

$h_{monitorC} = 0.162 \cdot ft$

SUMMARY OF CURVES for INPUT TO PIPE-FLO MODEL

(Appendix A and Pages 10 - 14)

Immersible Pump 0% Solids
Free Rotor
Positive Flow

Q (gpm)	0	40	80	120	150
H (ft)	0	0.156	0.624	1.4	2.2

Vertical Inline Pump 0% Solids
Free Rotor

Positive Flow

Q (gpm)	0	40	80	120	150
H (ft)	0	0.77	3.08	7	10.9

Immersible Pump 0% Solids
Free Rotor
Reverse Flow

Q (gpm)	0	40	80	120	150
H (ft)	0	0.86	3.45	7.78	12.2

Vertical Inline Pump 0% Solids
Locked Rotor
Reverse Flow

Q (gpm)	0	40	80	120	150
H (ft)	0	1.15	4.59	10.4	16.2

Micromotion 10% Solids
Mass Flow Meter

Q (gpm)	0	50	150	250	350
H (ft)	0	0.702	3.714	9.286	17.128

30% Solids

Q (gpm)	0	50	150	250	350
H (ft)	0	2.311	7.704	19.26	33.705

Monitor Tube 0% Solids

Q (gpm)	0	50	150	250	350
H (ft)	0	0.098	0.717	1.87	3.55

10% Solids

Q (gpm)	0	50	150	250	350
H (ft)	0	0.13	0.87	2.18	4.04

SLURRY TRANSFER LINE - Identification and Configuration

Node Name: ~N--0 Elevation: $ImPumpSuction := 608.0 \cdot ft$ (Ref. 15.8 & Lawrence Pump Data (Appx. M))

Pipe Name: Pipe 0 $L_{Pipe0} := 5.31 \cdot in$ $L_{Pipe0} = 0.442 \cdot ft$

(5" Suction Diameter)

- Pipe-FLO Pressure Source at 0 psig at 0 ft (conservative)
- 1, entrance (exit, for Siphoning)

Node Name: ~N--1 Elevation: $ImPumpDischarge := ImPumpSuction + 5.31 \cdot in$

$ImPumpDischarge = 608.443 \cdot ft$ (Ref. 15.0 & Lawrence Pump Data (Appx. M))

Pipe Name: Pipe 1 $L_{vPipe1} := (3 + 4 + 2 \cdot (4.875)) \cdot in$ (Ref. 15.0)

(3" Line) $L_{hPipe1} := (8.125 + 3) \cdot in$ (Ref. 11 (Appx. M))

$L_{Pipe1} := L_{vPipe1} + L_{hPipe1}$ $L_{Pipe1} = 2.323 \cdot ft$

- Immersible Pump Component

1 el, 1 Swivel---> - 3, 3", 90° SR els
- 1, 4 x 3 enlarger - 4" approach

$BoosterPumpSuction := 639 \cdot ft + 1.281 \cdot in$

Node Name: ~N--2 Elevation: $Reducer_{4x3} := ImPumpDischarge + 1.396 \cdot ft$

$Reducer_{4x3} = 609.838 \cdot ft$ (Ref. 11, 15.8 & 15.2)

Pipe Name: Pipe 2 $L_{vPipe2} := BoosterPumpSuction - Reducer_{4x3}$ $L_{vPipe2} = 29.268 \cdot ft$

(4" Line) $L_{hPipe2} := (2 \cdot (10.125) + 12.29 + 18.97 + 15.6) \cdot in$ $L_{hPipe2} = 5.592 \cdot ft$

$L_{Pipe2} := L_{vPipe2} + L_{hPipe2}$ $L_{Pipe2} = 34.861 \cdot ft$

- 1, 4", 45° SR el

2 Swivels---> - 4, 4", 90° SR els

- 2, 4", 90° LR els
- 1, 4", 90° SR el

Jumper Connector---> - 1, 4" miter bend

Node Name: ~N--2.1 Elevation: $BoosterPumpSuction = 639.107 \cdot ft$ (Ref. 15.8 & 15.9)

Pipe Name: Pipe 2.1 $L_{Pipe2.1} := 1 \cdot ft$

(4" Line - Pipe 2.1 modeled to support components not included in this calulation.)

Client NUMATEC HANFORD COMPANY
Subject PROJECT W-320 WASTE RETRIEVAL for TANK 241-C-106
Pipe Drainflow and Anti-Siphon Sizing for Transfer Line
Location C TANK FARM - HANFORD 200 EAST AREA

WO/Job No. E09141
Date 3 / 5 / 97
Checked
Revised

Filename slurylist.mcd
By D.L. STONE DLS
By M.D. BROCKETT MB
By

(SLURRY LINE- *cont..*)

Node Name: ~N--2.2 Elevation: $BoosterPumpSuction = 639.107 \cdot ft$ (Ref. 15.9)

Pipe Name: Pipe 3
(3" Line)

$L_{Pipe3} := 4 \cdot ft + 9.2 \cdot in$ $L_{Pipe3} = 4.767 \cdot ft$

- 90° el 4" LR
- 4x3 reducer, 4" approach
- Pump Backflow Component
- 4x3 enlgr, 4" approach
- 90° el 4" LR

Node Name: ~N--3 Elevation: $BoosterPumpDischarge := BoosterPumpSuction + 4.25 \cdot in$ (Ref. 15.9)

$BoosterPumpDischarge = 639.461 \cdot ft$ $(Checkpoint_1)$

Pipe Name: Pipe 3.1
(4" Line)

$L_{vPipe3.1} := (1 \cdot ft + 2.9 \cdot in) + (1 \cdot ft + 5.8 \cdot in)$ $L_{vPipe3.1} = 2.725 \cdot ft$ (Ref. 15.10 & 15.9)

$L_{hPipe3.1} := (12 \cdot ft + 7 \cdot in) + 2 \cdot ft$ $L_{hPipe3.1} = 14.583 \cdot ft$ (Ref. 15.10)

$Jumper := L_{vPipe3.1} + L_{hPipe3.1}$ $Jumper = 17.308 \cdot ft$

2 jmpr conn = miter bend 4"
3 90° el 4" LR

$L_{Pipe3.1} := 410.3 \cdot ft + Jumper$ (Ref. 15.1 & 15.4)

6, 4" 90° Bends $r/d = 10$

$L_{Pipe3.1} = 427.608 \cdot ft$

2, 4" 45° Bends $r/d = 9$

Node Name: ~N--3.1 Elevation: $Checkpoint_2 := 650.42 \cdot ft$ (Ref. 15.1 & 15.5)

Pipe Name: Pipe 3.2
(4" Line)

$L_{Pipe3.2} := 468.1 \cdot ft$

4, 4" 90° Bends $r/d = 10$

Node Name: ~N--3.2 Elevation: $Checkpoint_3 := 661.63 \cdot ft$ (Ref. 15.1 & 15.5)

Pipe Name: Pipe 3.3
(4" Line)

$L_{Pipe3.3} := 843.2$

11, 4" 90° Bends $r/d = 10$

Node Name: ~N--3.3 Elevation: $SystemHighpoint := 676.05 \cdot ft$ (Ref. 15.1)

Pipe Name: Pipe 3.4
(4" Line)

$L_{Pipe3.4} := (15.504 + 1.583) \cdot in$

$L_{Pipe3.4} = 1.424 \cdot ft$

- 1 jmpr conn = miter bend 4"
- 1, 90° el 4" LR
- 1, 4 x 3 reducer - 4" approach

(SLURRY LINE- *cont..*)

Node Name: ~N--4 Elevation: $Micromotion_{in} := SystemHighpoint - 15.375 \cdot in$ (Ref. 15.11)

$Micromotion_{in} = 674.769 \cdot ft$

Pipe Name: Pipe 4 $L_{Pipe4.1} := (5.427 \cdot ft - 34.562 \cdot in) + (2 + 5.292) \cdot in$

(3" Line) $L_{Pipe4.1} = 3.155 \cdot ft$

- 1, 90° el 3" LR
- Micromotion Flowmeter
- 1, 3-way Ball Valve, Cv = 228

Node Name: ~N--4.1 Elevation: $Micromotion_{out} := Micromotion_{in}$ (Ref. 15.11)

$Micromotion_{out} = 674.769 \cdot ft$

Pipe Name: Pipe 5 $L_{Pipe5} := (9.958 + 5.292 + 30.844) \cdot in$ (Ref. 15.11)

(4" Line) $L_{Pipe5} = 3.841 \cdot ft$

- 1, 4 x 3 enlarger - 4" approach
- 3, 90° el 4" LR
- 1 jmpr conn = miter bend 4"

Node Name: ~N--5 Elevation: $Nozzle := SystemHighpoint - (1 \cdot ft + 9.375 \cdot in)$ (Ref. 15.11)

$Nozzle = 674.269 \cdot ft$

Pipe Name: Pipe 5.1 $L_{5.1} := 7 \cdot ft + 8 \cdot in$ $L_{5.1} = 7.667 \cdot ft$ (Ref. 15.14)

(4", Sched. 80 Line)

Node Name: ~N--5.1 Elevation: $SiphonHole := 665.8 \cdot ft$ (2, 1/2" holes) (Ref. 15.1)

Pipe Name: Pipe 5.2 $L_{Pipe5} := (37 - 7) \cdot ft - 7.75 \cdot in$ $L_{Pipe5} = 29.354 \cdot ft$ (Ref. 15.14)

(4", Sched. 80 Line)

$LowerNozzles := 635.91 \cdot ft$ (Ref. 15.1)

Node Name: ~N--6 Elevation: $UpperNozzles := LowerNozzles + 7.75 \cdot in$ (Ref. 15.14)

$UpperNozzles = 636.556 \cdot ft$

Distributor Nozzle Pressure Sources: $H_{UpperNozzles} := 653.66 \cdot ft - UpperNozzles$ $H_{UpperNozzles} = 17.104 \cdot ft$
(Maximum Liquid Level)

(SLURRY LINE- *cont..*)

Node Name: ~N-6.1

Pipe Name: Pipe 6.1 (2" , Sched. 80 Line) $L_{Pipe5.1} := 0.5 \cdot ft$ - 1, exit (entrance, for Siphoning)

Node Name: ~N-6.2

Pipe Name: Pipe 6.2 (2" , Sched. 80 Line) $L_{Pipe5.2} := 0.5 \cdot ft$ - 1, exit (entrance, for Siphoning)

Node Name: ~N-7 Elevation: $LowerNozzles := 635.91 \cdot ft$ (Ref. 15.1 & 15.14)

Pipe Name: Pipe 7 $L_{Pipe7} := 7.75 \cdot in$ $L_{Pipe7} = 0.646 \cdot ft$

(4" Line)

Distributor Nozzle Pressure Sources: $H_{LowerNozzles} := H_{UpperNozzles} + L_{Pipe7}$ $H_{LowerNozzles} = 17.75 \cdot ft$

(Maximum Liquid Level)

Node Name: ~N-7.1

Pipe Name: Pipe 7.1 (4" , Sched. 80 Line) $L_{Pipe6.1} := 6 \cdot in$ $L_{Pipe6.1} = 0.5 \cdot ft$

- 1 ecc. 4 x 2 reducer (enlarger, for Siphoning)

Node Name: ~N-7.11

Pipe Name: Pipe 7.11 (2" , Sched. 80 Line) $L_{Pipe6.11} := 2 \cdot in$ $L_{Pipe6.11} = 0.167 \cdot ft$

- 1, exit (entrance, for Siphoning)

Node Name: ~N-7.2

Pipe Name: Pipe 7.2 (4" , Sched. 80 Line) $L_{Pipe6.2} := 6 \cdot in$ $L_{Pipe6.2} = 0.5 \cdot ft$

- 1 ecc. 4 x 2 reducer (enlarger, for Siphoning)

Node Name: ~N-7.22

Pipe Name: Pipe 7.22 (2" , Sched. 80 Line) $L_{Pipe6.22} := 2 \cdot in$ $L_{Pipe6.22} = 0.167 \cdot ft$

- 1, exit (entrance, for Siphoning)

Client NUMATEC HANFORD COMPANY
Subject PROJECT W-320 WASTE RETRIEVAL for TANK 241-C-106
Pipe Drainflow and Anti-Siphon Sizing for Transfer Lines
Location C TANK FARM - HANFORD 200 EAST AREA

WO/Job No. E09141
Date 3 / 5 / 97
Checked
Revised

Filename suprlist.mcd
By D.L. STONE DLS
By M.D. BROCKETT MB
By

SUPERNATE LINE - Identification and Configuration

Node and Pipe Names, Elevations, Pipe Diameters, Pipe Lengths, Fittings and Pressure Sources

Node Name: ~N-0 Elevation: $ImPumpSuction := 635.5 \cdot ft$ (Ref. 15.8 & Lawrence Pump Data (Appx. M))

Pipe Name: Pipe 0 $L_{vPipe0} := 5.31 \cdot in$ $L_{vPipe0} = 0.442 \cdot ft$
(5" Suction Diameter)

$Submergence := (653.66 - 635.5) \cdot ft$

$Submergence = 18.16 \cdot ft$

- Pipe-FLO Pressure Source at 0 psig at 17.77 ft
- Pump entrance

Node Name: ~N-1 Elevation: $ImPumpDischarge := ImPumpSuction + 5.31 \cdot in$

$ImPumpDischarge = 635.943 \cdot ft$

Pipe Name: Pipe 1 $L_{vPipe1} := (3 + 4 + 2 \cdot (4.875)) \cdot in$ (Ref. 15.0)
(3" Line) $L_{hPipe1} := (8.125 + 3) \cdot in$ (Ref. 11 (Appx. M))

$L_{Pipe1} := L_{vPipe1} + L_{hPipe1}$ $L_{Pipe1} = 2.323 \cdot ft$

- Immersible Pump (Component curves)

1 el + 1 Swivel---> - 3, 3", 90° SR els
- 1, 4 x 3 enlarger - 4" approach

$SiphonHole := 661.7 \cdot ft$

Node Name: ~N-2.1 Elevation: $Reducer_{4x3} := ImPumpDischarge + L_{vPipe1}$

$Reducer_{4x3} = 637.338 \cdot ft$

Pipe Name: Pipe 2.1 $L_{vPipe2.1} := (SiphonHole - ImPumpSuction) - (L_{vPipe0} + L_{vPipe1})$ (Ref. 15.8)
(4" Line)

$L_{hPipe2.1} := 2 \cdot (10.125 \cdot in)$ (Ref.11 (Appx. M))

$L_{Pipe2.1} := L_{vPipe2.1} + L_{hPipe2.1}$ $L_{Pipe2.1} = 26.049 \cdot ft$

- 1, 4", 45° SR el

2 Swivels---> - 4, 4", 90° SR els

(SUPERNATE LINE- *cont..*)

$Elv_{PlatetoSuction} := 9.313 \cdot in$ (Ref. 15.16)

$Elv_{Plates} := 2 \cdot (1.5 \cdot in)$ (Ref. 15.3, Pg 2)

$Elv_{PlatetoLap} := 15.25 \cdot in$ (Ref. 15.3, Pg 2)

$Elv_{LaptoHole} := (102.75 - 8) \cdot in$ (Ref. 15.3, Pg 2)

Node Name: ~N-2.2 Elevation: $SiphonHole := 671.115 \cdot ft - (Elv_{Plates} + Elv_{PlatetoLap} + Elv_{LaptoHole})$

$SiphonHole = 661.7 \cdot ft$

Pipe Name: Pipe 2.2 $L_{vPipe2.2} := (Elv_{Plates} + Elv_{PlatetoLap} + Elv_{LaptoHole}) + Elv_{PlatetoSuction}$

(4" Line) $L_{vPipe2.2} = 10.193 \cdot ft$

$L_{hPiping} := (12.29 + 18.97) \cdot in$ (Ref. 15.2, Pg 2)

$L_{hJumper} := (17.5 + 46 + 7) \cdot in$ (Ref. 15.16, Pg 3)

$L_{Pipe2.2} := L_{vPipe2.2} + L_{hPiping} + L_{hJumper}$ $L_{Pipe2.2} = 18.673 \cdot ft$

- 4, 4", 90° LR els
- 1, 4", 90° SR el
- Jumper Connector---> 1, 4" miter bend
- 4", 2-way PBM Ball Valve, Cv = 650

$BoosterPumpDischarge := (677.073 - 4.404) \cdot ft$ (Ref. 15.16)

Node Name: ~N-2.3 Elevation: $BoosterPumpSuction := BoosterPumpDischarge - 4.25 \cdot in$ (Ref. 15.16)

$BoosterPumpSuction = 672.315 \cdot ft$

Pipe Name: Pipe 2.3 $L_{Pipe3} := 2 \cdot (4 \cdot in)$ $L_{Pipe3} = 0.667 \cdot ft$

(3" Line)

- 1, 4 x 3 reducer - 4" approach
- Vertical Inline Pump (Component curves)
- 1, 4 x 3 enlarger - 4" approach

(SUPERNATE LINE- *cont..*)

$SystemHighpoint := 677.11 \cdot ft$

Node Name: ~N-3 Elevation: $BoosterPumpDischarge := (677.073 - 4.404) \cdot ft$ (Ref. 15.16)

$BoosterPumpDischarge = 672.669 \cdot ft$

Pipe Name: Pipe 3 $L_{vPipe3} := (SystemHighpoint - BoosterPumpDischarge)$ $L_{vPipe3} = 4.441 \cdot ft$

(4" Line) $L_{hPipe3} := (12.9 + 15.25) \cdot in$ $L_{hPipe3} = 2.346 \cdot ft$ (Ref. 15.16)

$L_{Pipe3} := L_{vPipe3} + L_{hPipe3}$ $L_{Pipe3} = 6.787 \cdot ft$

Jumper Conn---> - 1, 4" miter bend
- 3, 4", 90° LR els
- 1, 4 x 1 Tee, thru Run

Node Name: ~N-4 Elevation: $SystemHighpoint := 677.11 \cdot ft$ (Ref. 15.1 & 15.7)

Pipe Name: Pipe 4.1 $L_{Pipe4.1} := 822.8 \cdot ft$ - 10, 4", 90° Bends $r/_d$=10

(4" Line)

Node Name: ~N-5 Elevation: $Checkpoint_3 := 661.63 \cdot ft$ (Ref. 15.1 & 15.5)

Pipe Name: Pipe 4.2 $L_{Pipe4.2} := 468.1 \cdot ft$ - 4, 4", 90° Bends $r/_d$=10

(4" Line)

Node Name: ~N-6 Elevation: $Checkpoint_2 := 650.39 \cdot ft$ (Ref. 15.1 & 15.4)

Pipe Name: Pipe 4.3 $L_{Pipe4.3} := 428.7 \cdot ft$ 5, 4" 90° Bends $r/_d$ = 10

(4" Line) 2, 4" 45° Bends $r/_d$ = 9

(SUPERNATE LINE- *cont..*)

Node Name: ~N-10 Elevation: $Monitor_{Top} := Modified_{Swivel} - 8 \cdot in$ (Ref. 15.18)

$Monitor_{Top} = 621.85 \cdot ft$

Pipe Name: Pipe 7 $L_{Pipe7} := (12.94 + 1.5) \cdot in$ $L_{Pipe7} = 1.203 \cdot ft$ - Monitor Component Curve
(2.5" Line)

Node Name: ~N-11 Elevation: $Nozzle_{In} := Monitor_{Top} - (18 + 1.5) \cdot in$ (Ref. 15.20)

$Nozzle_{In} = 620.225 \cdot ft$ - 1, 2.5 x 1 reducer - 7.25" approach

Pipe Name: Pipe 8 $L_{Pipe8} := 7.25 \cdot in$ $L_{Pipe8} = 0.604 \cdot ft$
(2.5" Line - reducer, only)

Node Name: ~N-12 Elevation: $Nozzle_{Out} := Nozzle_{In} - (7.25) \cdot in$ (Ref. 15.20)

$Nozzle_{Out} = 619.621 \cdot ft$

Pipe Name: Pipe 9
(1", Schedule 80 Line) $L_{Pipe9} := 3.25 \cdot in$ $L_{Pipe9} = 0.271 \cdot ft$ - Exit

---

Node Name: ~N-13 Elevation: $End := Nozzle_{Out} - 3.25 \cdot in$ (Ref. 15.20)

$End = 619.35 \cdot ft$ - Pipe-FLO Pressure Source, 0 psig at 0 ft submergence

(SUPERNATE LINE- *cont..*)

$SluicerFlange_{Top} := 638.33 \cdot ft$ (Ref. 15.21)

$Modified_{Swivel} := (SluicerFlange_{Top} - 15.813 \cdot ft)$ (Ref. 15.21)

Node Name: ~N-7 Elevation: $PitNozzle_{C106} := 641.42 \cdot ft$ $(Checkpoint_1)$ (Ref. 15.1)

Pipe Name: Pipe 4.4
(4" Line)

$L_{vPipe4.4} := (PitNozzle_{C106} - Modified_{Swivel} - 8.4 \cdot in)$ (Ref. 15.18)

$L_{Jumper} := (5.464 + 1.33) \cdot ft$ (Ref. 15.17)

$L_{Template} := 15.25 \cdot in$ (Ref. 15.19)

$L_{hPipe4.4} := L_{Jumper} + L_{Template}$

$L_{Pipe4.4} := L_{vPipe4.4} + L_{hPipe4.4}$ $L_{Pipe4.4} = 26.268 \cdot ft$

- 5, 4", 90° LR els
- 2, 4" miter bend
- 2, 4", 45° SR el
- 1, 4 x 2.5 reducer - 4" approach

Node Name: ~N-8 Elevation: $Reducer_{4x2.5} := Modified_{Swivel} + 8.4 \cdot in$ (Ref. 15.21 & 15.18)

$Reducer_{4x2.5} = 623.217 \cdot ft$

Pipe Name: Pipe 5
(2.5" Line)

$L_{vPipe5} := 8.4 \cdot in$

$L_{hPipe5} := 6.375 \cdot in$

$L_{Pipe5} := L_{vPipe5} + L_{hPipe5}$ $L_{Pipe5} = 1.231 \cdot ft$

- 1, 2.5", 90° SR els
- 1, 4" miter bend

Node Name: ~N-9 Elevation: $Modified_{Swivel} = 622.517 \cdot ft$ (Ref. 15.21 & 15.18)

Pipe Name: Pipe 6
(2" Line)

$L_{Pipe6} := 8 \cdot in$ $L_{Pipe6} = 0.667 \cdot ft$

- 1, 2 x 2.5 enlarger - 3.5" approach

(SUPERNATE LINE- *cont..*)

Node Name: ~N-10 Elevation: $Monitor_{Top} := Modified_{Swivel} - 8 \cdot in$ (Ref. 15.18)

$Monitor_{Top} = 621.85 \cdot ft$

Pipe Name: Pipe 7 $L_{Pipe7} := (12.94 + 1.5) \cdot in$ $L_{Pipe7} = 1.203 \cdot ft$ - Monitor Component Curve
(2.5" Line)

Node Name: ~N-11 Elevation: $Nozzle_{In} := Monitor_{Top} - (18 + 1.5) \cdot in$ (Ref. 15.20)

$Nozzle_{In} = 620.225 \cdot ft$ - 1, 2.5 x 1 reducer - 7.25" approach

Pipe Name: Pipe 8 $L_{Pipe8} := 7.25 \cdot in$ $L_{Pipe8} = 0.604 \cdot ft$
(2.5" Line - reducer, only)

Node Name: ~N-12 Elevation: $Nozzle_{Out} := Nozzle_{In} - (7.25) \cdot in$ (Ref. 15.20)

$Nozzle_{Out} = 619.621 \cdot ft$

Pipe Name: Pipe 9
(1", Schedule 80 Line) $L_{Pipe9} := 3.25 \cdot in$ $L_{Pipe9} = 0.271 \cdot ft$ - Exit

---

Node Name: ~N-13 Elevation: $End := Nozzle_{Out} - 3.25 \cdot in$ (Ref. 15.20)

$End = 619.35 \cdot ft$ - Pipe-FLO Pressure Source, 0 psig at 0 ft submergence

Client NUMATEC HANFORD COMPANY
Subject PROJECT W-320 WASTE RETRIEVAL for TANK 241-C-106
Pipe Drainflow and Anti-Siphon Sizing for Transfer Lines
Location C TANK FARM - HANFORD 200 EAST AREA

WO/Job No. E09141
Date 3 / 5 / 97
Checked 3/25/97
Revised

Filename time.mcd
By D.L. STONE
By D.L. EVANS
By

Basic Calculation for Determination of Time to Drain Pipelines

The following calculation exemplifies the method used to estimate the time for each pipe in the two Piping Systems to drain. The Excel spreadsheet shown on Page 8 repeats this calculation for each pipe in the system and sums the results.

EXAMPLE: Pipe 3.1 — Pipe Name

$d := 4.03 \cdot in$ — Pipe Inner Diameter

$A := \left(\frac{\pi \cdot d^2}{4}\right)$ $\quad A = 0.089 \cdot ft^2$ — Cross sectional Area of Pipe

$L := 428.91 \cdot ft$ — Pipe Length

$V := A \cdot L$ $\quad V = 284.207 \cdot gal$ — Pipe Volume

1. _____

The following method is used, and the results for each pipe summed, for the pipeline from the lower station point (1/3 of the distance up the pipe to the transfer line lowpoint) to the end of the line.

$Q_{Lowpoint} := 122.3 \cdot \frac{gal}{min}$ — Drain Flowrate from Highpoint, provided by Pipe-Flo

$T := \frac{V}{Q_{Lowpoint}}$ $\quad T = 2.324 \cdot min$ — Time required to drain Pipe at the given Flowrate

2. _____

The following method is used, and the results for each pipe summed, for the pipeline from the system highpoint to the lower station point (1/3 of the distance up the pipe to the transfer line lowpoint.)

$Q_{High} := 122.3 \cdot \frac{gal}{min}$ — Drain Flowrate from Highpoint, provided by Pipe-Flo

$Q_{Station} := 141.5 \cdot \frac{gal}{min}$ — Drain Flowrate from a Stationpoint, provided by Pipe-Flo

$Q_{average} := \frac{Q_{High} + Q_{Station}}{2}$ — Average Drain Flowrate

$T := \frac{V}{Q_{average}}$ $\quad T = 2.155 \cdot min$ — Time required to drain Pipe at the given Flowrate

Appendix A

Client Project W320
Subject Transfer Line Siphon
Location MO294/200E

WO/Job No. E09141
Date 02/13/97 By FM Hauck
Checked 03/11/97 By DL Stone
Revised 03/13/97 By FM Hauck

BACKGROUND

This calculation is to develop head loss curves for the pumps in the W320 system when the transfer lines are draining following pump operation. Ultimately, the results of this calculation will be used to determine the antisyphon measures required for this system.

METHOD

The head loss curves developed in this calculation are based on data taken from "Centrifugal and Axial Flow Pumps," second edition, by AJ Stepanoff. In Table 13.3, Stepanoff uses actual pump test data for thirteen different specific speed pumps to develop values for pump operation at special conditions. (See Appendix A)

In our case we are specifically interested in the data for flow with both free and locked rotor. Using the "affinity laws" (as explained on page 26 of the text) Stepanoff's data is applied to our specific pumps to determine the head loss through the pump at different capacities.

SCOPE

This calculation develops head loss curves for 1) Lawrence Pump serial nos. 91231-1 and 91231-2, Submersible Pumps for positive and negative flow conditions and 2) Lawrence Pumps, Inc. serial nos. 91232-1 and 91232-2, Vertical Inline Slurry Pumps for negative and positive flow conditions.

SPECIFIC SPEED (Ref. Stepanoff, pg. 27, equation 2.6)

3 x 4 x 13 Submersible Pump

At the pump's BEP, the flow is 540 gpm and the head is 114 feet when operated at 1760 rpm. $N_s = n\sqrt{Q}/H^{.75}$. The resulting specific speed, N_s, is 1172.

3 x 3 x 13 Vertical Inline Pump

At the pump's BEP, the flow is 480 gpm and the head is 448 feet when operated at 3056 rpm. $N_s = n\sqrt{Q}/H^{.75}$. The resulting specific speed, N_s, is 688. Since this pump can be operated at variable speeds, it is important to note that "specific speed" is related to impeller geometry (hydraulics) and will remain the same as the pump speed is adjusted.

Client Project W320
Subject Transfer Line Siphon
Location MO294/200E

WO/Job No. E09141
Date 02/13/97 By FM Hauck
Checked 03/11/97 By DL Stone
Revised 03/13/97 By FM Hauck

CALCULATION OF HEAD LOSS

3 X 4 X 13 Submersible Pump

This pump can rotate in a reverse direction so the Table 13.3 in Stepanoff states that a pump at this approximate specific speed in rotor-free, negative flow operation will have a flow of 85% in the reverse direction while rotating at 104% of its normal speed in a reverse direction when subjected to 100% rated head.

Stepanoff states that the affinity laws can be used to relate this data to other operating conditions as follows:

Condition	0	1	2	3	4	5
Flow, GPM	0	40	80	120	150	175
% of 540	0	7.4	14.8	22.2	27.8	32.4

$$H_2 = H_1\left(\frac{Q_2}{Q_1}\right)^2$$

CONDITION 1 $H_2 = 100\left(\frac{7.4}{85}\right)^2 = 0.76\%$

$H_2 = 0.76\%(114) = \underline{\underline{0.86\ FT}}$

CONDITION 2 $H_2 = 100\left(\frac{14.8}{85}\right)^2 = 3.03\%$

$H_2 = 3.03\%(114) = \underline{\underline{3.45\ FT}}$

CONDITION 3 $H_2 = 100\left(\frac{22.2}{85}\right)^2 = 6.82\%$

$H_2 = 6.82\%(114) = \underline{\underline{7.78\ FT}}$

CONDITION 4 $H_2 = 100\left(\frac{27.8}{85}\right)^2 = 10.69\%$

$H_2 = 10.69\%(114) = \underline{\underline{12.2\ FT}}$

CONDITION 5 $H_2 = 100\left(\frac{32.4}{85}\right)^2 = 14.5\%$

$H_2 = 14.5\%(114) = \underline{\underline{16.5\ FT}}$

Lawrence 3 X 4 X 13 Submersible
Free Rotor, Reverse Flow

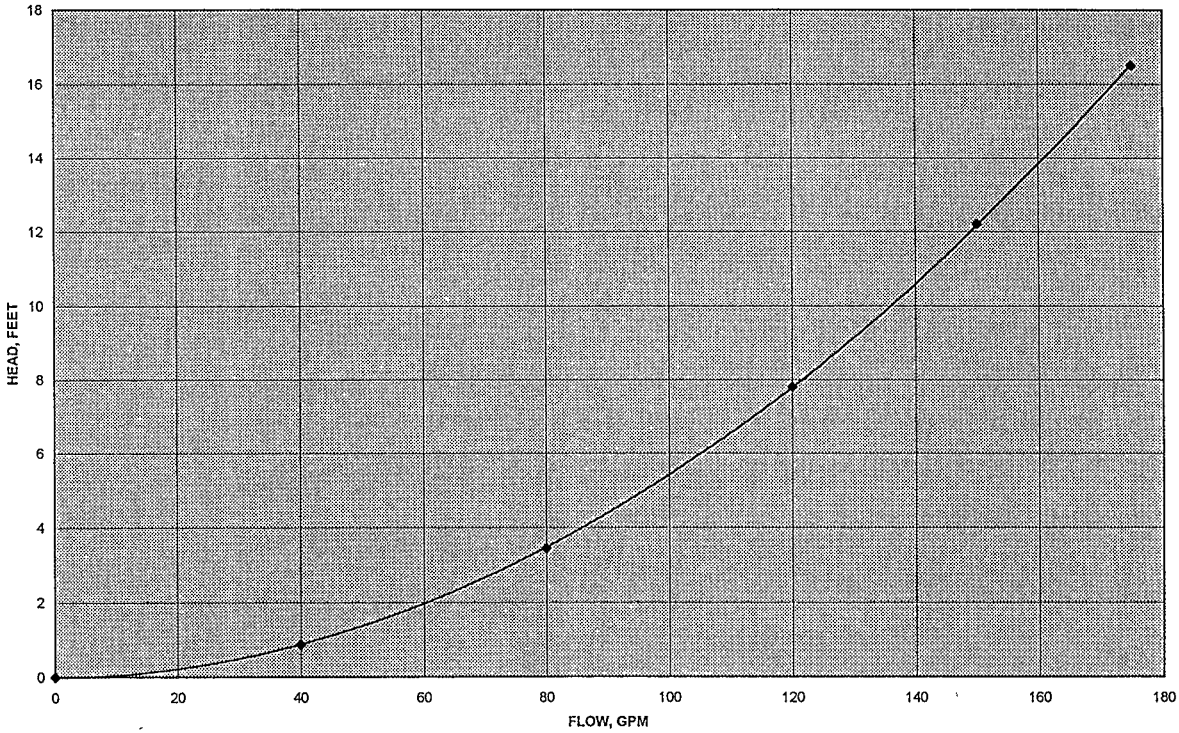

This curve should not be used without the attached explaination.

2/13/97 7:35 AM
FMH

Client Project W320
Subject Transfer Line Siphon
Location M0294/200E

WO/Job No. E09141
Date 02/13/97 By FM Hauck
Checked 03/11/97 By DL Stone
Revised 03/13/97 By FM Hauck

The 3 x 4 x 13 Submersible Pump can be subjected to transfer line drain down in a positive flow direction as well as negative. Again, using the information from Stepanoff and the affinity laws, a head loss vs. flow curve has been developed. Table 13.3 in Stepanoff states that with 100% flow in the positive direction there will be a head loss of 25% of the pump rated head at BEP.

$$H_2 = H_1\left(\frac{Q}{Q}\right)^2$$

CONDITION 1 $H_2 = 25\left(\frac{7.4}{100}\right)^2 = 0.137\%$

$H_2 = 0.137\%(114) = \underline{0.156 \text{ FT}}$

CONDITION 2 $H_2 = 25\left(\frac{14.8}{100}\right)^2 = 0.548\%$

$H_2 = 0.548\%(114) = \underline{0.624 \text{ FT}}$

CONDITION 3 $H_2 = 25\left(\frac{22.2}{100}\right)^2 = 1.23\%$

$H_2 = 1.23\%(114) = \underline{1.40 \text{ FT}}$

CONDITION 4 $H_2 = 25\left(\frac{27.8}{100}\right)^2 = 1.93\%$

$H_2 = 1.93\%(114) = \underline{2.20 \text{ FT}}$

CONDITION 5 $H_2 = 25\left(\frac{32.4}{100}\right)^2 = 2.59\%$

$H_2 = 2.59\%(114) = \underline{2.95 \text{ FT}}$

Lawrence 3 x 4 x 13 Submersible
Free Rotor, Positive Flow

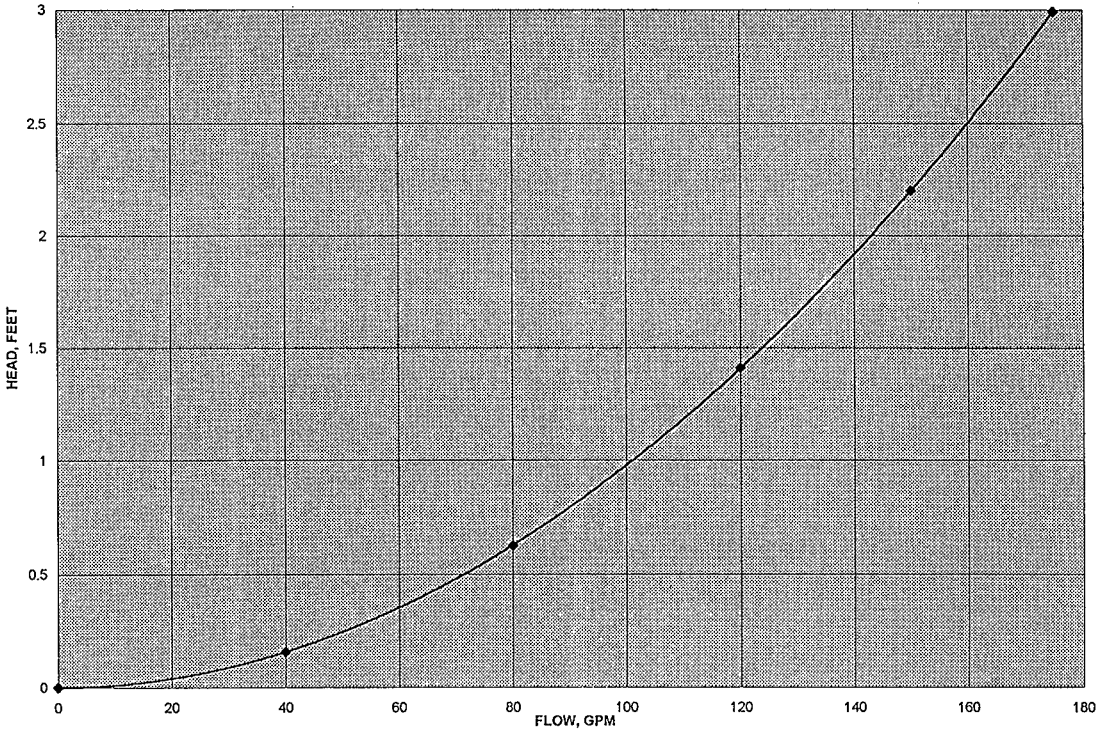

This curve should not be used without the attached explaination.

2/13/97 8:53 AM
FMH

Client Project W320
Subject Transfer Line Siphon
Location MO294/200E

WO/Job No. E09141
Date 02/13/97 By FM Hauck
Checked 03/11/97 By DL Stone
Revised 03/13/97 By FM Hauck

CALCULATION OF HEAD LOSS--continued

3 x 3 x 13 Vertical Inline

This pump has an anti-reverse rotation clutch on it so that during negative flow it will have a locked rotor. Since locked rotor performance data is not available for a specific speed of 688, the values in Table 13.3 of Stepanoff for a pump specific speed of 1190 is used. This will give us a reasonable estimate of the head losses across this pump. Stepanoff states that with 100% head and 0% rotation, the negative flow will be 164%.

Using the affinity laws:

Condition	0	1	2	3	4	5
Flow, GPM	0	40	80	120	150	175
% of 480	0	8.3	16.6	25	31.2	36.5

$$H_2 = H_1\left(\frac{Q_2}{Q_1}\right)^2$$

CONDITION 1 $H_2 = 100\left(\frac{8.3}{164}\right)^2 = 0.26\%$ $H_2 = 0.26\%(448) = \underline{1.15\ FT}$

CONDITION 2 $H_2 = 100\left(\frac{16.6}{164}\right)^2 = 1.02\%$ $H_2 = 1.02\%(448) = \underline{4.59\ FT}$

CONDITION 3 $H_2 = 100\left(\frac{25}{164}\right)^2 = 2.32\%$ $H_2 = 2.32\%(448) = \underline{10.4\ FT}$

CONDITION 4 $H_2 = 100\left(\frac{31.2}{164}\right)^2 = 3.62\%$ $H_2 = 3.62\%(448) = \underline{16.2\ FT}$

CONDITION 5 $H_2 = 100\left(\frac{36.5}{164}\right)^2 = 4.95\%$ $H_2 = 4.95\%(448) = \underline{22.2\ FT}$

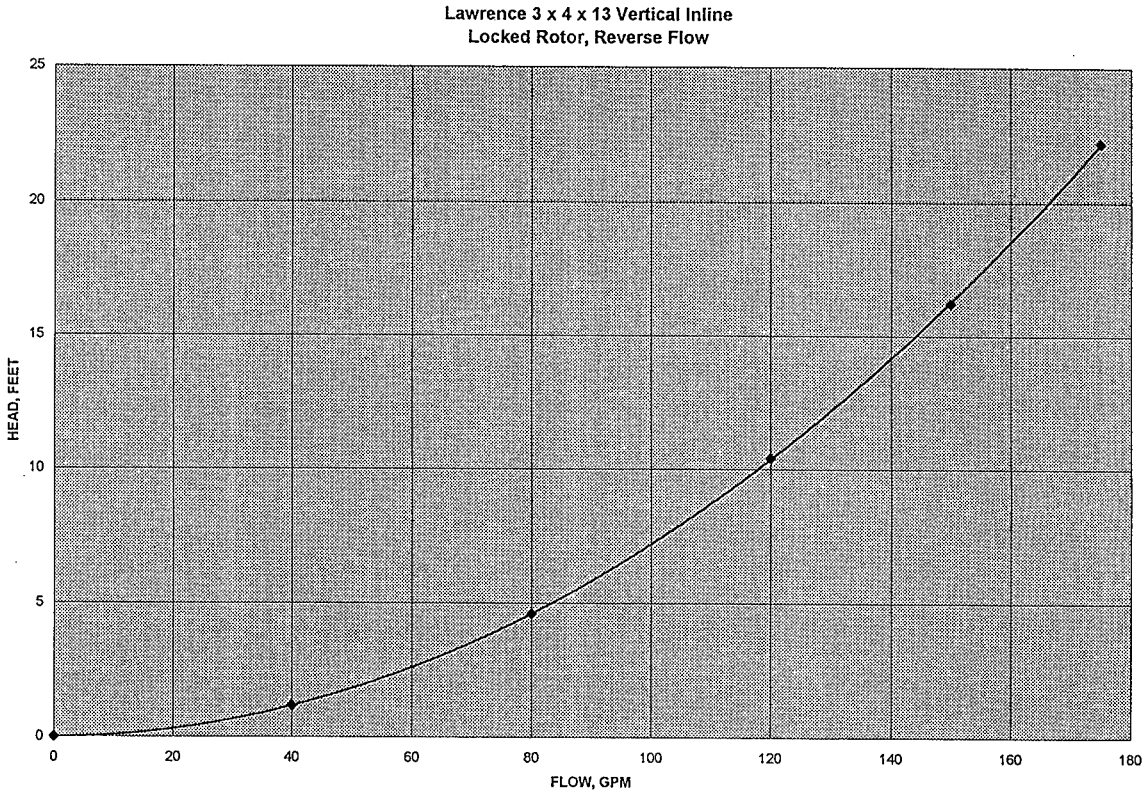

This curve should not be used without the attached explaination.

2/13/97 8:46 AM
FMH

CALCULATION OF HEAD LOSS -- continued

The 3 x 3 x 13 Vertical Inline pump can be subjected to transfer line drain down in a positive flow direction as well. Again, using the information from Stepanoff and the affinity laws, a head loss vs flow curve has been developed. Table 13.3 in Stepanoff states that with 100% flow in the positive direction there will be a head loss of 25% of the rated head at BEP. Again, it should be noted that for this case we are using data for a pump specific speed of 1270 because data for a specific speed of 688 is not available.

$$H_2 = H_1\left(\frac{Q_2}{Q_1}\right)^2$$

CONDITION 1 $H_2 = 25\left(\frac{8.3}{100}\right)^2 = 0.17\%$

$H_2 = 0.17\%(448) = \underline{\underline{0.77\ FT}}$

CONDITION 2 $H_2 = 25\left(\frac{16.6}{100}\right)^2 = 0.69\%$

$H_2 = 0.69\%(448) = \underline{\underline{3.08\ FT}}$

CONDITION 3 $H_2 = 25\left(\frac{25}{100}\right)^2 = 1.56\%$

$H_2 = 1.56\%(448) = \underline{\underline{7\ FT}}$

CONDITION 4 $H_2 = 25\left(\frac{31.2}{100}\right)^2 = 2.43\%$

$H_2 = 2.43\%(448) = \underline{\underline{10.9\ FT}}$

CONDITION 5 $H_2 = 25\left(\frac{36.5}{100}\right)^2 = 3.33\%$

$H_2 = 3.33\%(448) = \underline{\underline{14.9\ FT}}$

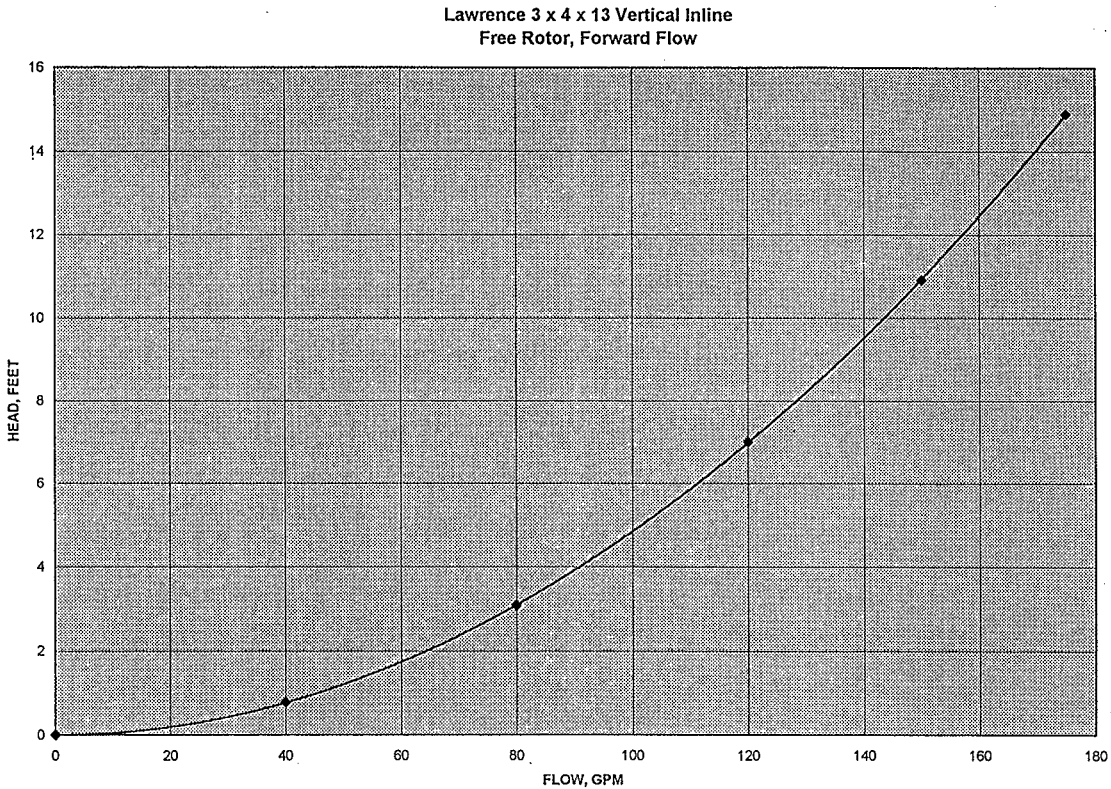

This curve should not be used without the attached explaination.

2/13/97 8:55 AM
FMH

APPENDIX A

2nd
Edition

Centrifugal and Axial Flow Pumps

THEORY, DESIGN, AND APPLICATION

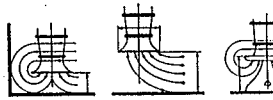

A. J. Stepanoff, Ph.D.
Melville Medalist, A.S.M.E.
Ingersoll-Rand Company

New York · London · Sydney

JOHN WILEY & SONS, INC.

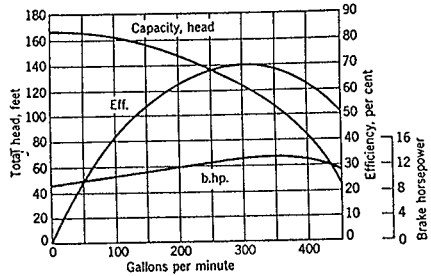

FIG. 2.7. Centrifugal pump characteristics; 3-in. pump at 1750 rpm.

as the square of the speed, and the brake horsepower varies directly as the cube of the speed. The cube of the speed is based on the assumption that efficiency stays constant with speed for each point. The affinity laws are expressed by the following equations

$$\frac{Q_1}{Q_2} = \frac{n_1}{n_2} \qquad \frac{H_1}{H_2} = \frac{n_1^2}{n_2^2} \qquad \frac{(\text{bhp})_1}{(\text{bhp})_2} = \frac{n_1^3}{n_2^3} \tag{2.5}$$

Figure 2.8 shows three head-capacity curves at speeds n_1, n_2, and n_3. Points connected by the affinity laws are called corresponding points

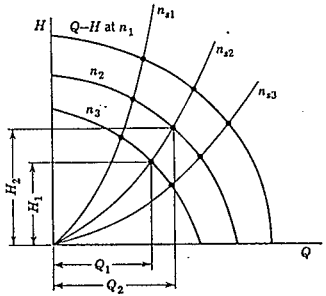

FIG. 2.8. Head and capacity variations with the speed.

and are connected by curved lines which are square parabolas. These points have the same efficiency and are of the same specific speed.

HNF-2477, Rev. 0
Page B-42

2.5 SPECIFIC SPEED

In the early stages of pump development it was customary to classify pumps according to their hydraulic-type ratios, such as a ratio of the impeller width at discharge to the impeller outside diameter (b_2/D_2). Ratios of the impeller eye diameter to the impeller outside diameter (D_1/D_2) were also used for the same purpose. Camerer † introduced a new characteristic to describe the hydraulic type of water turbines which was later applied to centrifugal pumps. It is called specific speed and is defined as

$$n_s = \frac{n\sqrt{Q}}{H^{3/4}} \tag{2.6}$$

where n is revolutions per minute, Q is capacity in gallons per minute, and H is head in feet. The physical meaning of specific speed is: revolutions per minute to produce 1 gpm at 1-ft head with an impeller similar to the one under consideration but reduced in size. The physical meaning of specific speed has no practical value and the number is used as a "type" number. The specific speed as a type number is constant for all similar pumps and does not change with the speed for the same pump. Figure 2.3 shows several impellers of different specific speeds. With each specific speed are associated definite proportions of leading impeller dimensions such as b_2/D_2 or D_1/D_2.

In the study of pump performance and classification of all important design constants, specific speed is a criterion of similarity for centrifugal pumps in the manner that Reynolds number is a criterion for pipe flow. When used as a type number, specific speed is calculated for the best efficiency point. For a multistage pump, specific speed is calculated on the basis of the head per stage. When the specific speed of a double-suction impeller is compared with that of a single-suction impeller the capacity of the first should be divided by 2 or its specific speed should be divided by $\sqrt{2}$. All important pump design and performance characteristics are so closely connected with the specific speed that it is impossible to discuss certain features without reference to it.

From equation 2.6 it follows that, for the same head-capacity requirements, higher specific speed pumps will run at a higher speed and will be of smaller physical dimensions. Also, for the same speed and capacity, higher specific speed pumps will operate at a lower head or, for the same speed and head, a higher specific speed pump will deliver a higher capacity.

† R. Camerer, *Z. ges. Turbinenwes.*, p. 217, 1915.

ing conditions become similar to those with pumps running in reverse direction as described above.

In addition to torque requirements for pumping during the starting period shown on speed-torque curves, the motor has to furnish the torque for accelerating the mass of the rotating element of the pump. Although the impellers are filled with water, the acceleration of the latter is already taken care of by the pumping speed-torque curve, as pumping is produced by water acceleration.

Starting large pumps, even with a flat brake-horsepower curve, against a closed valve and with the pipe empty has been found undesirable, as the shock of the water column against the valve may cause mechanical damage to the pump or column parts. This has been actually observed on pumps circulating molten salt in catalytic oil-cracking processes. The high specific gravity of this material (1.75 to 1.90) increases the intensity of the shock during the starting period.

13.6 EFFECT OF SPECIFIC SPEED UPON THE BEHAVIOR OF CENTRIFUGAL PUMPS UNDER SPECIAL OPERATING CONDITIONS

When complete pump characteristics are available, questions connected with any possible operating conditions outside the normal head-capacity and speed range can be easily answered. Unfortunately, experimental determination of complete pump characteristics requires equipment usually not found among commercial testing facilities of the pump manufacturers. As a result, only a few complete pump characteristics are available.

In addition to the complete pump characteristics shown in Fig. 13.2, 13.3, and 13.4, below are listed several references giving the pump performance for the zones A, B, and C which are the most important for water-hammer studies. All pumps are of the single-suction type and specific speeds are tabulated in Table 13.2.

TABLE 13.2. REFERENCES FOR PUMP PERFORMANCE OUTSIDE THE NORMAL ZONE

Reference no.	4	5	5	14	15	16	17
Specific speed n_s	1700	2150	1850	1425	1350	1285	2150

In Table 13.3 are compiled from various sources, test results of several pumps of different specific speeds obtained at $T = 0$ or revolutions per minute = 0, and recalculated to $H = 100$ or $Q = 100$. A comparison of the figures in the tabulation would indicate the trend of the effect of specific speed on the pump behavior under the specified conditions.

HNF-2477, Rev. 0
Page B 43

TABLE 13.3. SPECIAL OPERATING CONDITIONS OF PUMPS OF DIFFERENT SPECIFIC SPEEDS

Operation		Negative Flow				Positive Flow				Remarks		
		Rotor-free		Locked		Rotor-free		Locked		Values of head (H), capacity (Q), and torque (T) are percentages of normal pump operation		
		$H = +100$, $T = 0$		$H = +100$, rpm $= 0$		$Q = +100$, $T = 0$		$H = -100$, rpm $= 0$				
No.	Specific speed, single-suction	$-Q$	$-$ rpm	$-Q$	$+T$	$-H$	$+$ rpm	$+Q$	$-T$	Size	Type of pump	Source
1	1,190	85	104	164						1½	Multistage	Stepanoff
2	1,220	76	108	117	96					2	Multistage	Stepanoff
3	1,270	68	117	118	120	25	32	133	80	4	Double-suction	Knapp
4	1,285		117							4	Four-stage	Stepanoff
5	1,700	58	125	115	146					8	Single-suction	Knapp
6	1,760	52	106	103	110	37	30	117	73	2	Single-suction	Kittredge
7	1,940	75	125	108	130	40	30	105	60	8	Single-suction	Kittredge
8	2,140	60	123	95	125						Single-suction single-volute	Knapp
9	2,140	50	123	108	140					8	Single-suction double-volute	Knapp
10	3,500	80	125	84	116	40	50	84	93	12	Double-suction	Stepanoff
11	6,700	112	126	79	88	33	66	55	67	16	Propeller	Stepanoff
12	7,200	85	128	37	74	34	65	50	65	16	Propeller	Stepanoff
13	13,500	121	123	66	37	40	70	72	54	16	Propeller	Stepanoff

NOTES. To find operating conditions other than those shown apply affinity laws except for propeller pumps with rotors locked.

Pumps 8 and 9 have the same impeller.

Pumps 11 and 12 have the same casing but the impellers are different.

REFERENCES

1. D. Thoma, "Vorgänge beim Ausfallen des Antriebes von Kreiselpumpen," Mitt. Hyd. Inst. Tech. Hochschule, München, Vol. 4, pp. 102–104, 1931, Munich, R. Oldenbourg; also in English translation: C. P. Kittredge and D. Thoma, "Centrifugal Pumps Operated under Abnormal Conditions," *Power*, pp. 881–884, June 2, 1931.
2. Ludolf Engel, "Die Rücklaufdrehzahlen der Kreiselpumpen," doctoral dissertation, Tech. Hochschule zu Braunschweig.
3. Clifford P. Kittredge, *Vorgänge bei Zentrifugalpumpenanlagen nach plötzlichem Ausfallen des Antriebes*, Munich, R. Oldenbourg, 1933.
4. R. T. Knapp, "Complete Characteristics of Centrifugal Pumps and Their Use in the Prediction of Transient Behavior," *Trans. A.S.M.E.*, pp. 683–689, November 1937.
5. R. T. Knapp, "Centrifugal Pump Performance as Affected by Design Features," *Trans. A.S.M.E.*, Vol. 63, No. 3, April 1941.
6. R. W. Angus, *Trans. A.S.M.E.*, Vol. 64, No. 8, November 1942.
7. *Engineering*, pp. 33–38, Jan. 10, 1930, and pp. 97–100, Jan. 24, 1930.

Appendix B

Client NUMATEC HANFORD COMPANY
Subject PROJECT W-320 WASTE RETRIEVAL for TANK 241-C-106
Airflow vs Pressure Drop Across Anti-Siphoning Holes
Location C TANK FARM - HANFORD 200 EAST AREA

WO/Job No. E09141
Date 3 / 5 / 97
Checked
Revised

Filename scfm-.mcd
By D.L. EVANS DLE
By M.D. BROCKETT MB
By

OBJECTIVE:

The objective of this calculation is to determine the airflow vs pressure drop across the anti-siphon holes of the W-320 Slurry and Supernate Lines.

DESIGN INPUTS:

Project W-320 Calculation W-320-27-045

Project W-320 Hydraulic Diagram - Drawing H-2-818536, Rev. 0

ASSUMPTIONS:

1. The anti-siphon holes are open.

2. The anti-siphon holes can be modeled as pressure-relieving devices as described in ANSI / API RP 520, Ref. 1, for equipment having a maximum allowable working pressure of 15 psig (applicable to the system during siphoning.)

METHOD of ANALYSIS:

Method used is as described in ANSI / API RP 520, Ref. 1, to determine air flow (SCFM) through anti-siphoning holes.

Calculations performed using *Mathcad 6.0*, MathSoft, Inc. are shown with sources noted adjacent to formulas.

REFERENCES

1. ANSI / API RP 520

2. Project W-320 Calculation W320-27-045, Appendices E, G, I & K.

CONCLUSIONS

All analyses were performed for only one anti-siphoning hole on each line. In all cases the air-flow was less than critical air flow for the available upstream pressure.

The following table shows air flows available through the anti-siphon holes at differential pressures provided by the system siphoning models at anti-siphon hole locations (Ref. 2)

Slurry Line	ΔP psid	Air Flow (SCFM)	Supernate Line	ΔP psid	Air Flow (SCFM)
10% Solids	6.159	49.33	0% Solids	3.917	11.23
30% Solids	6.656	49.54	10% Solids	4.368	11.58

CALCULATIONS

1. Check for Critical Flow

Critical throat pressure is calculated for the most conservative case, only.
Maximum differential pressure from the four siphon models was for the 30% Solids Slurry line.

$P_1 = 14.4$ psia — Atmospheric (Dome Air Space) Pressure - Atmospheric at Elev. 640 ft

$\Delta P = 6.656$ psi — Maximum Pressure Drop across Anti-Siphon Hole during Siphon Flow, in psig (Ref. 2)

$P_2 := P_1 - \Delta P$ $\quad P_2 = 7.7$ psia — Pipe internal pressure at Anti-Siphon Hole during Siphon Flow, in psia

From the equation: $$\frac{P_{cf}}{P_1} = \left[\frac{2}{(k+1)}\right]^{\frac{k}{k-1}}$$ in which: $k = 1.4$, $P_1 = 14.4$ psia (Ref. 1, Equation 1)

$$P_{cf} := P_1 \cdot \left[\frac{2}{(k+1)}\right]^{\frac{k}{k-1}}$$ $P_{cf} = 7.6$ psia — Critical Flow Throat Pressure

(Ref. 1, Sec. 4.3.1)

Note: $P_2 = 7.7$ psia $>$ $P_{cf} = 7.6$ psia — Since the downstream pressure, P_2, exceeds the Critical Flow Pressure, P_{cf}, Subcritical Flow occurs.

2. Subcritical Flow Equation for Air Flow through One Anti-Siphon Hole

10% Solids Slurry Line - 1/2" Hole Diameter (Calculation shown for 10% Solids Slurry Line case. All cases are tabulated and graphed.)

From the equation: $$A = \frac{V}{4645.2 \cdot F_2 \cdot K_d} \cdot \sqrt{\frac{Z \cdot T \cdot M}{P_1 \cdot (P_1 - P_2)}}$$ Effective required discharge area of the Anti-Siphon hole — Ref. 1, Pgs 28 & 29, Equation 6

Solving for air flow:

$$V = 4645.2 \cdot K_d \cdot A \cdot \frac{F_2}{\sqrt{\frac{Z \cdot T \cdot M}{P_1 \cdot (P_1 - P_2)}}} = 4645.2 \cdot K_d \cdot A \cdot \frac{F_2 \cdot \sqrt{P_1 \cdot (P_1 - P_2)}}{\sqrt{Z \cdot T \cdot M}}$$

$$V := \left(\frac{4645.2 \cdot K_d \cdot A}{\sqrt{Z \cdot T \cdot M}}\right) \cdot \left[F_2 \cdot \sqrt{P_1 \cdot (P_1 - P_2)}\right]$$ $V = 49.5$ SCFM — Required flow through a Single Anti-Siphon Hole

In which : $k = 1.4$ — Ratio of Specific Heats (Air)

$T_{Farenheit} = 80.0\ F$ — Temperature in degrees Farenheit

$T := T_{Farenheit} + 460 \quad T = 540.0\ R$ — Temperature in degrees Rankine

$M = 29.0$ — Molecular weight of air

$Z = 1.0$ — Compressibility factor for the deviation of the actual gas from a perfect gas

$K_d = 0.975$ — Effective coefficient of discharge

$r := \frac{P_2}{P_1} \quad r = 0.5$ — Ratio of backpressure to upstream relieving pressure (Pipe internal pressure to Dome Space pressure)

$d = 0.5\ in$ — Diameter of siphon holes

$A := \frac{\pi \cdot (d)^2}{4} \quad A = 0.2 \quad in^2$ — Actual Discharge Area of siphon holes

$$F_2 := \sqrt{\left(\frac{k}{k-1}\right) \cdot (r)^{\frac{2}{k}} \cdot \left[\frac{1 - r^{\frac{(k-1)}{k}}}{1 - r}\right]}$$

$F_2 = 0.7$ — Coefficient of subcritical flow through siphon holes

Collecting variables and regrouping, this equation can be simplified to:

$$V := (4645.2) \cdot (K_d) \cdot (P_1) \cdot (A) \cdot \sqrt{\frac{k}{M \cdot T \cdot Z \cdot (k-1)} \cdot \left[\left(\frac{P_2}{P_1}\right)^{\frac{2}{k}} - \left(\frac{P_2}{P_1}\right)^{\frac{k+1}{k}}\right]} \qquad V = 49.5 \quad SCFM$$

Client NUMATEC HANFORD COMPANY
Subject PROJECT W-320 WASTE RETRIEVAL for TANK 241-C-106
Pipe Drainflow and Anti-Siphon Sizing for Transfer Lines
Location C TANK FARM - HANFORD 200 EAST AREA

WO/Job No. E09141
Date 3 / 5 / 97
Checked
Revised

Filename siphon\text.mcd
By D.L. EVANS
By M.D. BROCKETT
By

Slurry Line - 1/2" Hole Diameter

$d := \frac{1}{2}$ in $\quad A := \frac{\pi \cdot (d)^2}{4} \quad A = 0.196$ in^2 Actual Discharge Area of a single siphon hole

$\Delta P_i :=$ Differential pressure at Anti-Siphon Hole location during Siphon Flow, in psia (Ref. 2, Pg.5)

0.1	
0.3155	<---- Required to support free draining. (10% Solids, conserv.)
0.5	
1.0	
2.0	
3.0	psi
4.0	
6.159	<---- 10% Solids
6.656	<---- 30% Solids

$P2_i := P1 - \Delta P_i \quad P2 =$

Pipe internal pressure at Anti-Siphon Hole location during Siphon Flow, in psia

i	0
0	0.00
1	14.30
2	14.08
3	13.90
4	13.40
5	12.40
6	11.40
7	10.40
8	8.24 <---- 10% Solids
9	7.74 <---- 30% Solids

psia

$$V_i := (4645.2)\cdot(K_d)\cdot(P1)\cdot(A)\cdot\sqrt{\frac{k}{M\cdot T\cdot Z\cdot(k-1)}\cdot\left[\left(\frac{P2_i}{P1}\right)^{\frac{2}{k}} - \left(\frac{P2_i}{P1}\right)^{\frac{k+1}{k}}\right]}$$

Air flow through One Anti-Siphon Hole $\quad V =$

i	0
0	0
1	8.5
2	14.97 <---- Volumetric Flow Required to support free draining (10% Solids, conserv.)
3	18.71
4	25.94
5	35.19
6	41.17
7	45.21
8	49.33 <---- 10% Solids
9	49.54 <---- 30% Solids

SCFM

Client NUMATEC HANFORD COMPANY
Subject PROJECT W-320 WASTE RETRIEVAL for TANK 241-C-106
Pipe Drainflow and Anti-Siphon Sizing for Transfer Lines
Location C TANK FARM - HANFORD 200 EAST AREA

WO/Job No. E09141
Date 3 / 5 / 97
Checked
Revised

Filename siphon\text.mcd
By D.L. EVANS
By M.D. BROCKETT
By

Sluice (Supernate) Line - 1/4" Hole Diameter

$d := \frac{1}{4}$ in $\quad A := \frac{\pi \cdot (d)^2}{4} \quad A = 0.049 \text{ in}^2$ Actual Discharge Area of a single siphon hole

$\Delta P_i :=$ Differential pressure at Anti-Siphon Hole location during Siphon Flow, in psia (Ref. 2, Pg. 5)

0.1	
0.2	
0.5	
0.75	
1.0	
2.0	
2.83	<---- Required to support free draining. (0% Solids, conserv.)
3.917	<---- 0% Solids
4.368	<---- 10% Solids

$P_{2_i} := P_1 - \Delta P_i \quad P_2 =$

0	0.00	Pipe internal pressure at Anti-Siphon Hole location during Siphon Flow, in psia
1	14.30	
2	14.20	
3	13.90	
4	13.65	
5	13.40	psia
6	12.40	
7	11.57	
8	10.48	<---- 0% Solids
9	10.03	<---- 10% Solids

$$V_i := (4645.2) \cdot (K_d) \cdot (P_1) \cdot (A) \cdot \sqrt{\frac{k}{M \cdot T \cdot Z \cdot (k-1)} \cdot \left[\left(\frac{P_{2_i}}{P_1}\right)^{\frac{2}{k}} - \left(\frac{P_{2_i}}{P_1}\right)^{\frac{k+1}{k}} \right]}$$

Air flow through One Anti-Siphon Hole $\quad V =$

0	0	
1	2.12	
2	2.99	
3	4.68	SCFM
4	5.67	
5	6.49	Volumetric Flow Required to support free draining
6	8.8	
7	10.08	<---- (0% Solids, conserv.)
8	11.23	<---- 0% Solids
9	11.58	<---- 10% Solids

ΔP	V
0.1	2.12
0.2	2.99
0.5	4.68
0.75	5.67
1	6.49
2	8.80
2.83	10.08
3.917	11.23
4.368	11.58

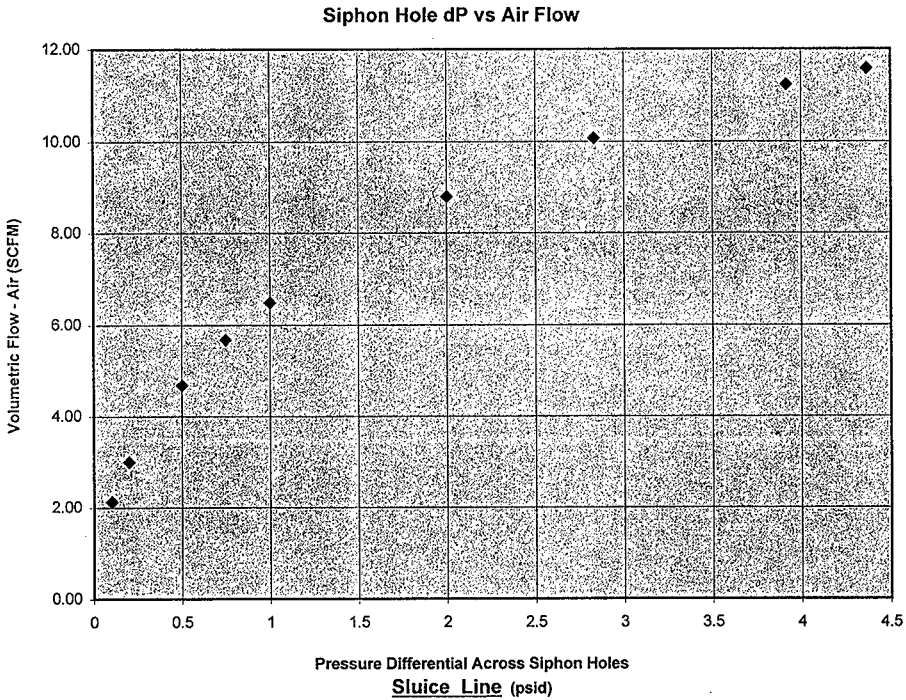

Atch. 1, App. B

ΔP	V
0.1	8.50
0.3155	14.97
0.5	18.71
1	25.94
2	35.19
3	41.17
4	45.21
5	47.82
6.159	49.33
6.656	49.54

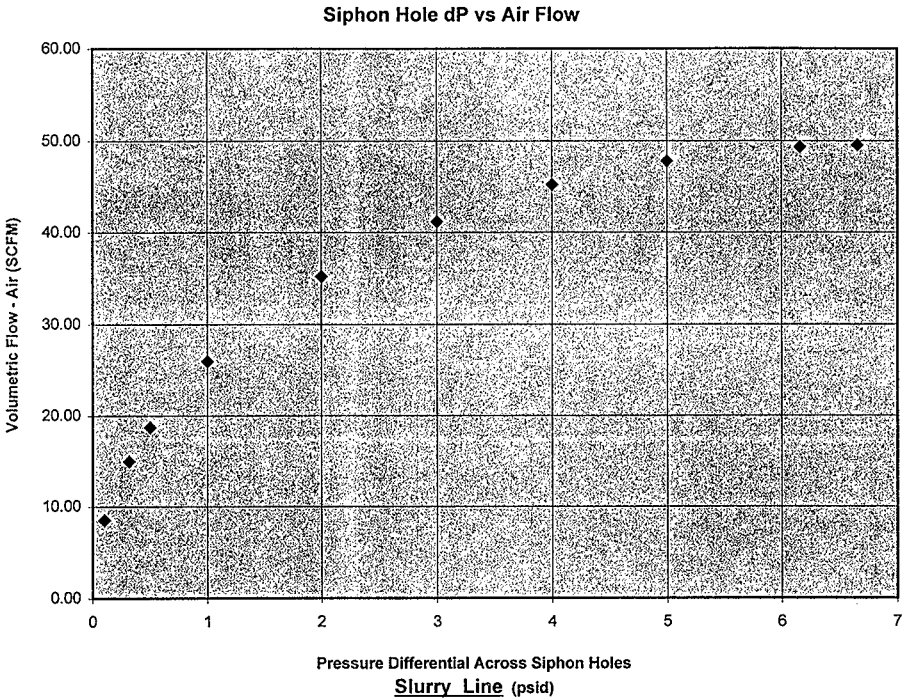

Atch. 2, App. B

Appendix C

CMF300 flow rate vs. pressure drop

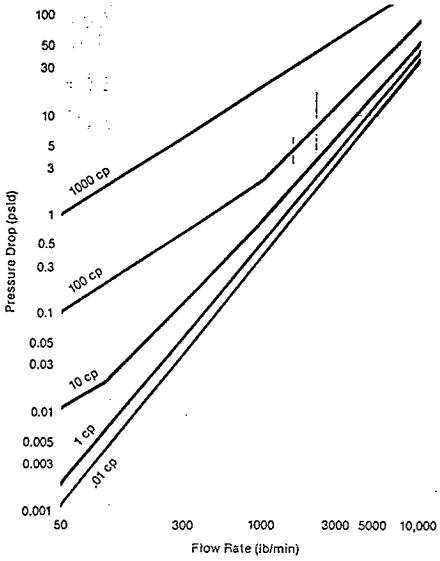

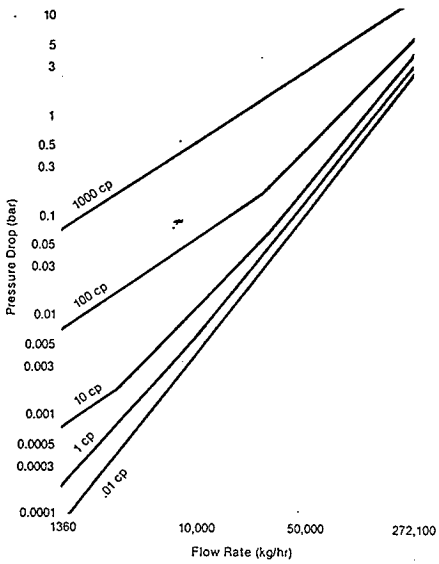

Finding pressure drop of process fluids with a viscosity near 1 centipoise (μ)

1. The pressure drop charts shown above have several curves, which represent different viscosity (μ) values. For fluids with a viscosity similar to water, use the curve labeled $\mu = 1.0$.
2. Locate the point on the English units or Metric units graph where the vertical line representing the desired flow rate intersects the curve labeled $\mu = 1.0$.
3. From that point, locate the nearest horizontal line, then refer to the left side of the graph, which indicates pressure drop (in psid or bar) at the desired flow rate.
4. Divide the pressure drop indicated on the graph by the specific gravity (S) of the process fluid relative to water:

   $\Delta P_{actual} = \Delta P_{plotted} / S_{relative\ to\ water}$

Finding pressure drop of process fluids with a viscosity above 1 centipoise (μ)

1. The pressure drop charts shown above have several curves, which represent different viscosity (μ) values. Use method a or b, below, to find the process fluid viscosity ($f_{viscosity}$).
   a. For fluids with a viscosity between any two values plotted on the English units or Metric units graph, interpolate the approximate $f_{viscosity}$ location.
   b. For fluids with a viscosity above the highest value plotted on the graph, find the ratio of actual viscosity to plotted viscosity:

   $f_{viscosity} = \mu_{actual} / \mu_{plotted}$
2. Multiply the pressure drop indicated on the left side of the graph by the $f_{viscosity}$ value from step 1:

   $\Delta P = \Delta P_{plotted} \times f_{viscosity}$
3. To find the actual pressure drop, divide the ΔP from step 2 by the specific gravity (S) of the process fluid relative to water:

   $\Delta P_{actual} = \Delta P / S_{relative\ to\ water}$

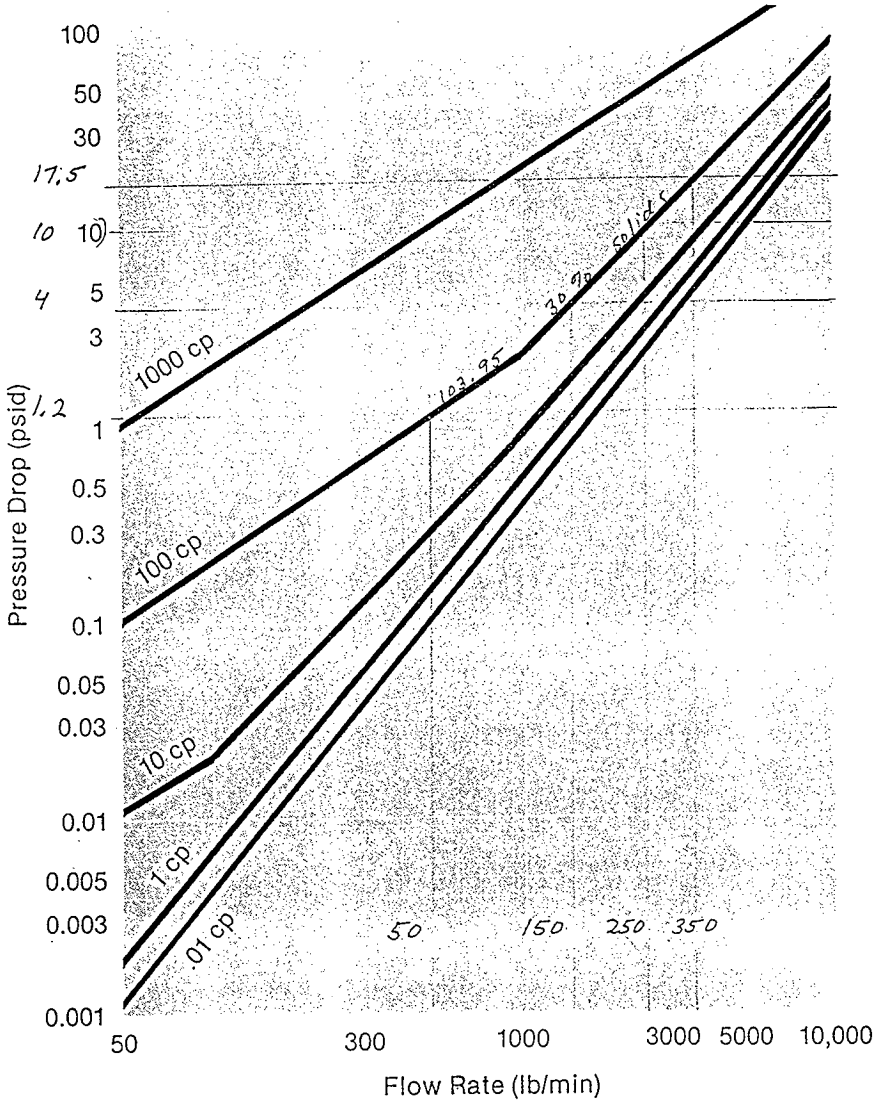

CMF300 flow rate vs. pressure drop

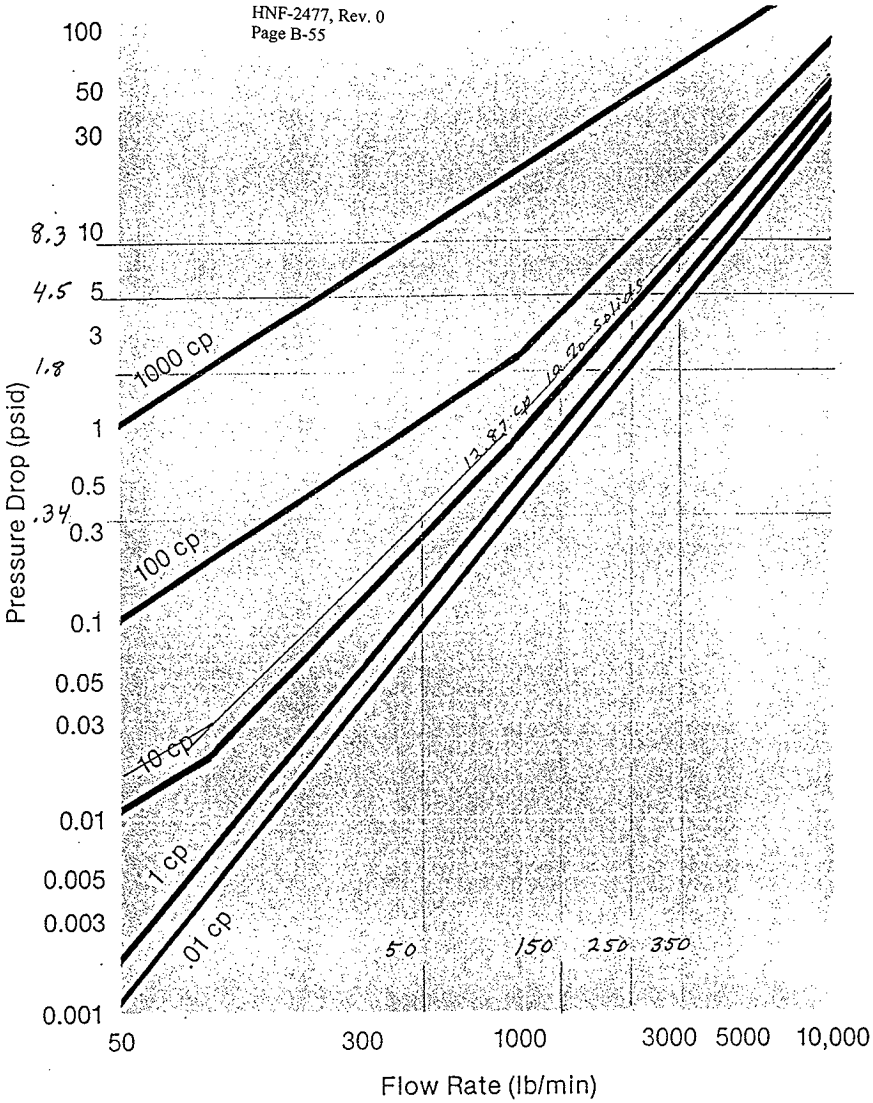

CMF300 flow rate vs. pressure drop

Appendix D

Station Points Table

Slurry Line		Station Point	Station Point Elevation	Length of Pipe	90 deg Els
Node ~N--3		1610.29	641.42		6
	Pipe 3.1			410.3	
Node ~N--3.1		1200.00	650.39		4
	Pipe 3.2			468.1	
Node ~N--3.2		731.88	661.63		11
	Pipe 3.3			843.2	
Node ~N--3.3		-111.35	675.46		
				1721.6	Line Length

Supernate Line		Station Point	Station Point Elevation	Length of Pipe	90 deg Els
Node ~N--7		1628.74	641.42		5
	Pipe 4.3			428.7	
Node ~N--6		1200.00	650.39		4
	Pipe 4.2			468.1	
Node ~N--5		731.88	661.63		10
	Pipe 4.1			822.8	
Node ~N--4		-90.91	677.11		
				1719.7	Line Length

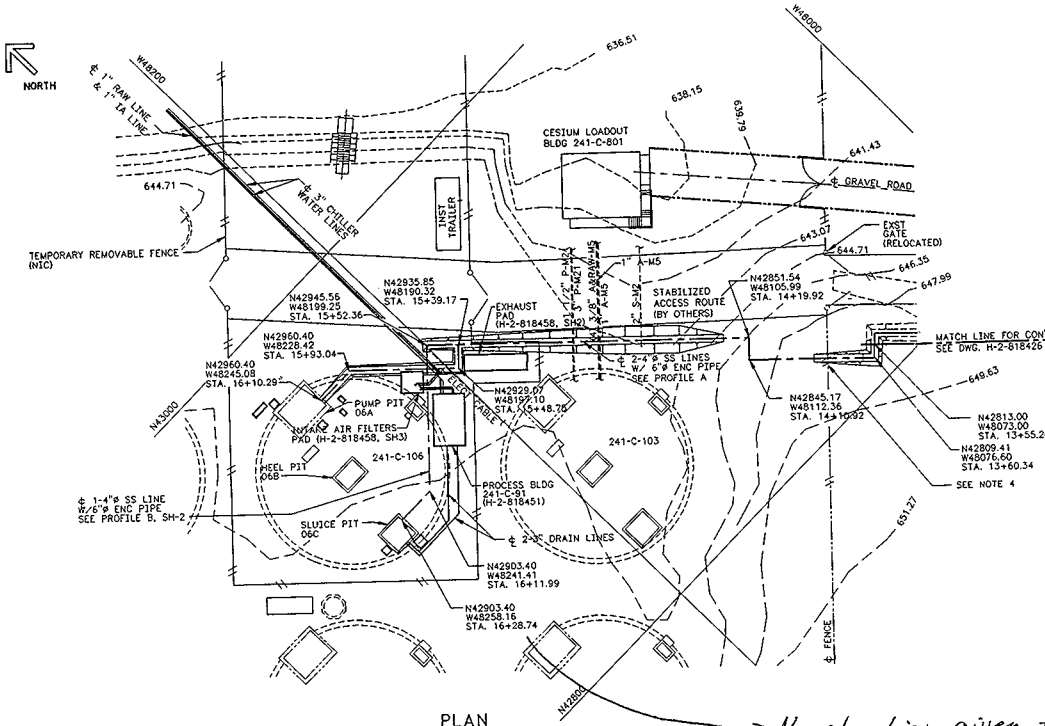

PLAN
SCALE: 1"=20'-0"

No elevation given for EOP - Supernate.
Ref. Hydraulic Diagram H-2-818536
EL = 641.42 ft.

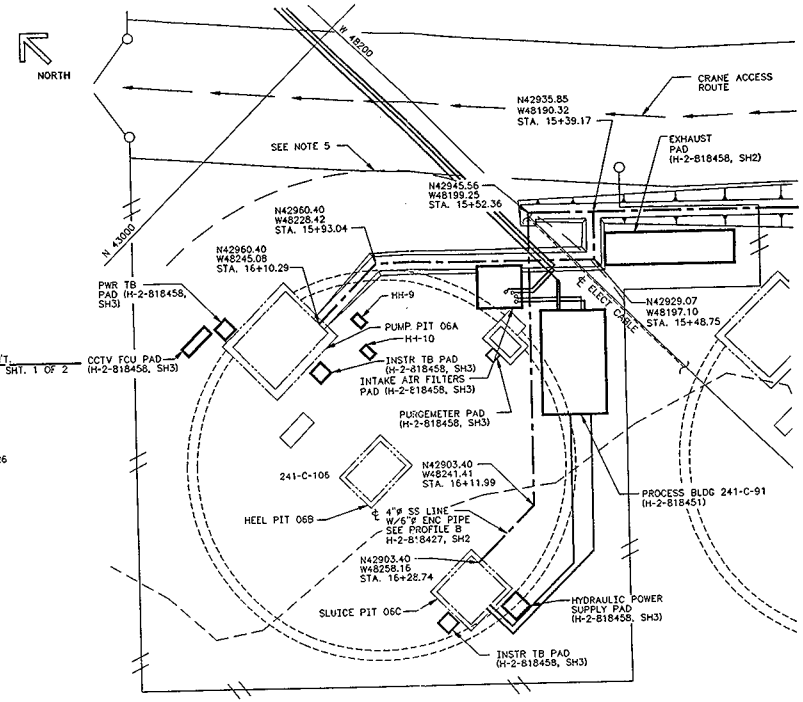

PARTIAL PLAN-TANK C-106
SCALE: 1"=10'-0"

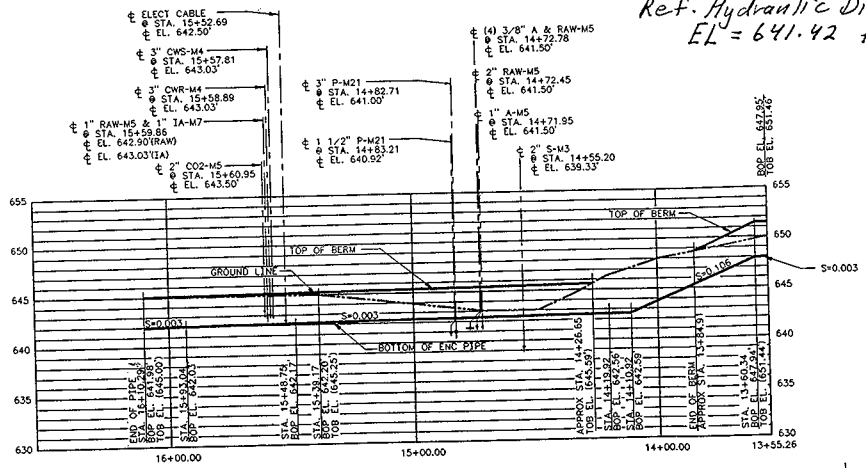

PROFILE A
SCALE: HORZ. 1"=20'-0"
VERT. 1"=5'-0"

NOTES:

1. FOR ADDITIONAL NOTES, SEE H-2-818431, SH1.
2. SEE DWG H-2-818427 SH2 FOR TRANSFER LINE EXCAVATION AND BERM DETAILS.
3. EXCAVATE, BACKFILL AND COMPACT FOR TRANSFER LINES IN ACCORDANCE WITH SPEC. SECTION 02225.
4. REPAIRS TO EXST C-FARM PERIMETER FENCE SHALL BE IN ACCORDANCE WITH SPEC. SECTION 02831.
5. A LOAD EXCLUSION BOUNDARY SHALL BE ESTABLISHED AROUND C-106 TANK A MINIMUM OF 20 FT FROM OUTSIDE PERIMETER EDGE OF TANK WALL FOR HEAVY CONSTRUCTION OPERATING EQUIPMENT/CRANES. INSIDE TRACKS OR WHEEL LOADS FOR SUCH EQUIPMENT SHALL NOT STRADDLE OR EXTEND INTO THIS LOAD EXCLUSION BOUNDARY AREA.

-20 0 20 40
SCALE IN FEET

H-2-818423 DRAWING LIST SH 7

NUMBER	TITLE
	REFERENCES

DRAWING TRACEABILITY LIST

REV NO.	DESCRIPTION	REV BY DATE	KCH APPROVAL
	REVISIONS		

CAD FILE B818427A CAD CODE 2J-1BM:ACD2-12.0:NN UNITS N

APVD FOR IMPLEMENTATION / APVD FOR CONSTRUCTION

APPROVED FOR IMPLEMENTATION BY WHC DATE

CONSTRUCTION

DESIGNED PC BRINKMAN DATE
SENIOR ENGINEER BOOTH
DRAWN
SAFETY SEE DR/AT FORM
CAVEAT SEE DR/AT FORM
CIVIL ENGINEER SEE DR/AT FORM
LEAD ENGINEER

SAFETY CLASS 3 SCI

U.S. DEPARTMENT OF ENERGY
RICHLAND OPERATIONS OFFICE
ICP KAISER HANFORD COMPANY

CIVIL
241-C-106 TRANSFER SYSTEM
PLAN & PROFILE

REVISION NO. 8 09/20/94 PROJECT W-320 TANK 241-C-106 SLUICING

SYST	BLDG NO.	DWG NO.	REV NO.
F	241-C	0302	H-2-818427	0

SCALE SHOWN JOB NO. ER4319 SHEET 1 OF 2

2 PLOT SCALE: 1=20 KEHCAD 1

KCH 6356.00 85/94 STRT/ADF 1994/03/30/09:00

EXPIRES 03-03-96

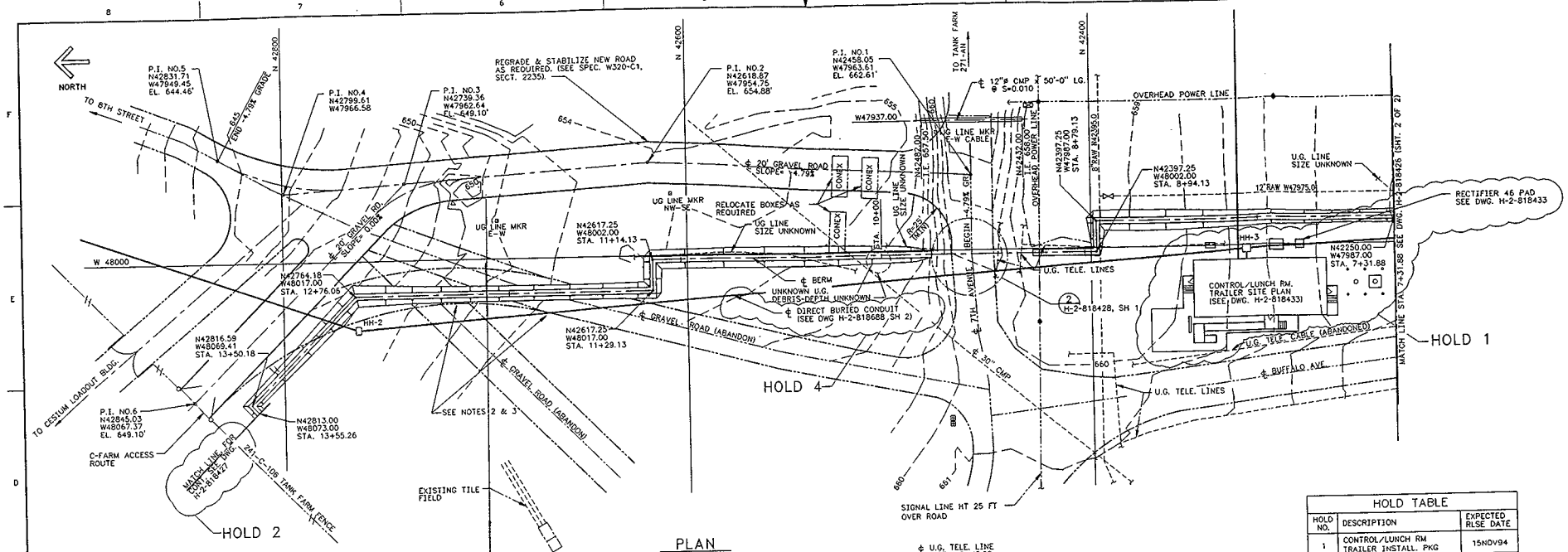

PLAN
SCALE: 1"=20'-0"

St. Pt. 1200
El. 650.39 ft
(Both Pipes)

HOLD TABLE		
HOLD NO.	DESCRIPTION	EXPECTED RLSE DATE
1	CONTROL/LUNCH RM TRAILER INSTALL. PKG	15NOV94
2	C-FARM CONST. PKG	11MAY95
3	AY-FARM CONST. PKG	14MAR95
4	CONTROL RM SYST INSTALL PKG	7JUN95

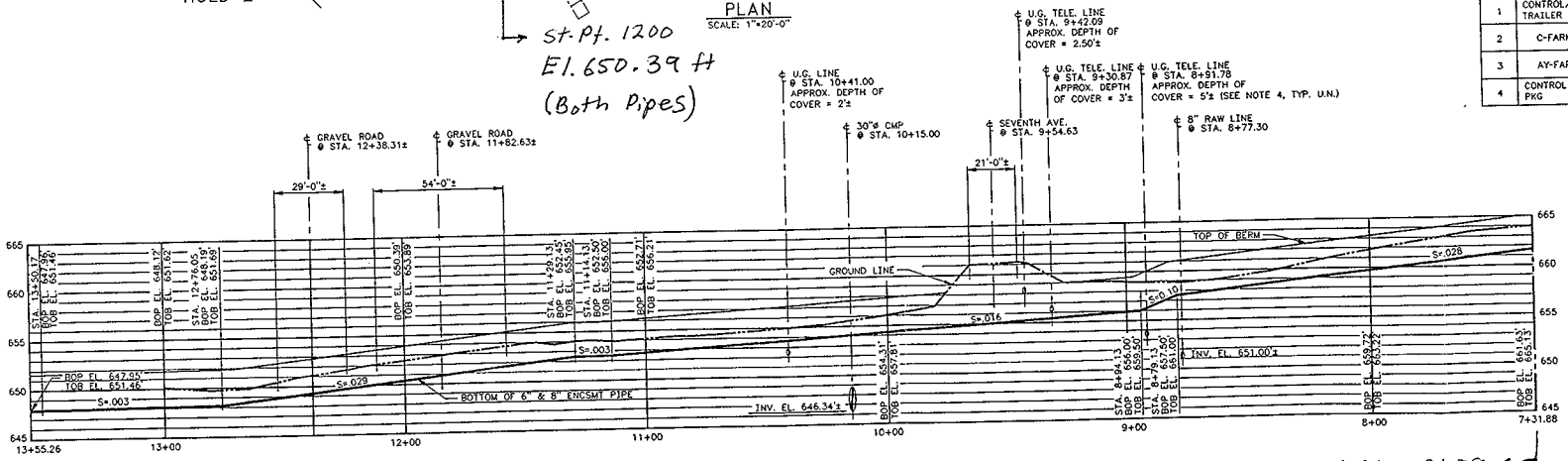

PROFILE
SCALE: HORZ. 1"=20'-0"
VERT. 1"=5'-0"

St. Pt. 731.88
El. 661.63 ft
(Both Pipes)

NOTES:

1. SEE DWG. H-2-818424 FOR LEGEND.
2. EXISTING GRAVEL ROADS NORTH OF 7TH AVENUE THAT INTERSECT TRANSFER LINE ROUTE ARE TO BE ABANDONED WHEN TRENCHING WORK STARTS.
3. PROVIDE BARRICADES ACROSS ROADS TO BE ABANDONED ON EACH SIDE OF TRANSFER LINE BERM AS REQUIRED.
4. APPROX. DEPTH OF COVER AS PER RADAR GROUND SCAN BY SURVEY GROUP DATED 10/26/93. SEE FILE NO. 2ESE-082.

EXPIRES 03-03-96

-20 0 20 40
SCALE IN FEET

H-2-818423 DRAWING LIST SH 3

NUMBER	TITLE

NUMBER	TITLE

DRAWING TRACEABILITY LIST

REV PT	DATE	DESCRIPTION	REV PT	DATE	DESCRIPTION

REVISIONS

CAD FILE B818426A CAD CODE 2B:TBM:ACD2:12.0:NN UNITS N

USE CONSTRUCTION
DESIGNED PC BRINKMAN DATE SAFETY CLASS 3 CH
DWG CHKR
CHECKED
SAFETY SEE DR/AT FORM
ENGR SEE DR/AT FORM
DWG CHKR SEE DR/AT FORM
LEAD ENGR

U.S. DEPARTMENT OF ENERGY
RICHLAND OPERATIONS OFFICE
ICF KAISER HANFORD COMPANY

CIVIL
INTERFARM TRANSFER SYSTEM
PLAN & PROFILE

REVIEW NO. 32 DATE 10/14/94
APPROVED FOR IMPLEMENTATION
BY FOR WHC DATE

PROJECT W-320, TANK 241-C-106 SLUICING
SITE F BLDG NO. 200E SHEET NO. 0302 DWG NO. H-2-818426 REV NO. 0
SCALE SHOWN JOB NO. ER4319 SHEET 1 OF 2
2 PLOT SCALE: 1=20 KEHCAD 1

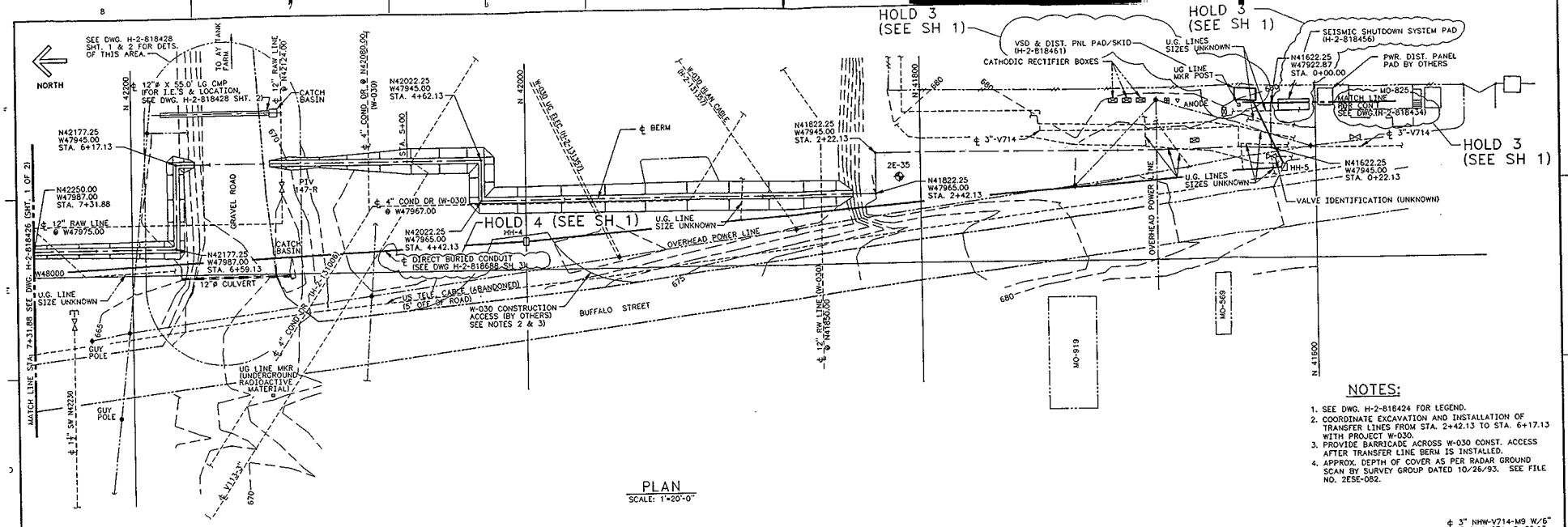

PLAN

SCALE: 1"=20'-0"

NOTES:

1. SEE DWG. H-2-818424 FOR LEGEND.
2. COORDINATE EXCAVATION AND INSTALLATION OF TRANSFER LINES FROM STA. 2+42.13 TO STA. 6+17.13 WITH PROJECT W-030.
3. PROVIDE BARRICADE ACROSS W-030 CONST. ACCESS AFTER TRANSFER LINE BERM IS INSTALLED.
4. APPROX. DEPTH OF COVER AS PER RADAR GROUND SCAN BY SURVEY GROUP DATED 10/26/93. SEE FILE NO. 2ESE-082.

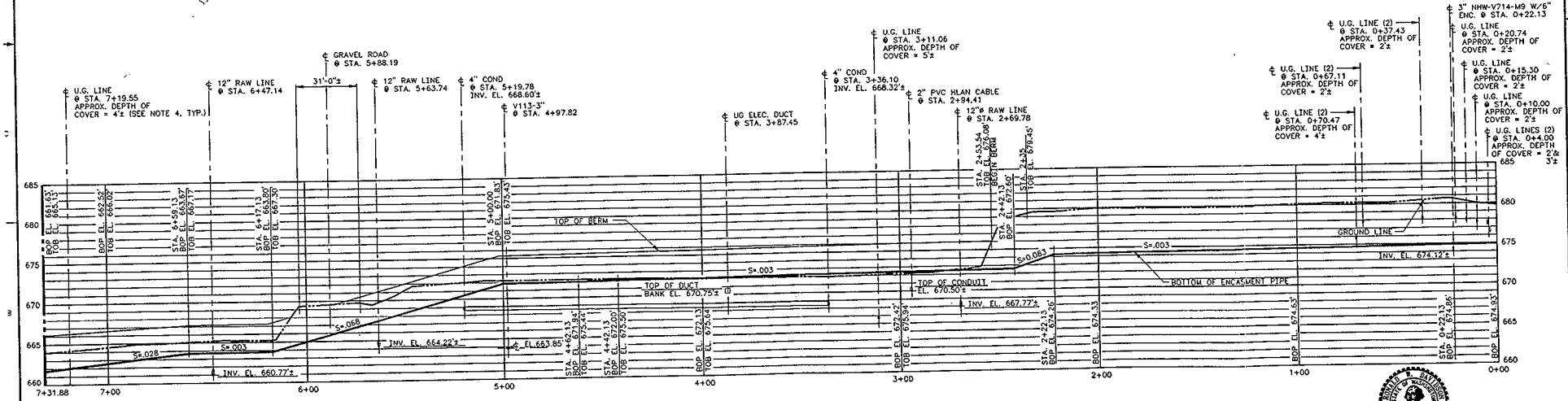

PROFILE

SCALE: HORZ. 1"=20'-0"
VERT. 1"=5'-0"

SCALE IN FEET: -20 0 20 40

HNF-2477, Rev. 0
Page B-60

DESIGNED PC BRINKMAN	SAFETY CLASS 3	USE CONSTRUCTION	
DRAWN BY			
CHECKED			
SAFETY SEE DR/AT FORM	U.S. DEPARTMENT OF ENERGY RICHLAND OPERATIONS OFFICE ICF KAISER HANFORD COMPANY		
ENVIR SEE DR/AT FORM	CIVIL INTERFARM TRANSFER SYSTEM PLAN & PROFILE		
CONS ENGR SEE DR/AT FORM			
LEAD ENGR			
REVISION NO. 29	PROJECT W-320, TANK 241-C-106 SLUICING		
SCALE SHOWN	SHEET 2 OF 2	DWG NO. H-2-818426	REV NO. 0
CAD FILE 88184268	CAD CODE 2B:IBM:ACD2:12.0:NN		
2 PLOT SCALE: 1=20	KEHCAD	1	

EXPIRES 05-03-95

NUMBER	TITLE
DRAWING TRACEABILITY LIST	
NEW	VOID
REFERENCES	

REV NO.	DESCRIPTION	REV BY DATE	HEM APPROVALS

APPROVED FOR CONSTRUCTION BY WHC DATE

No Station Point Identified
Ref. Hydraulic Diagram H-2-818536 EL = 677.11 ft
From STA -0+80.91 -80.91 + - (3.83+6.17) = 90.91 ft
[Ref. ES-320-M6]

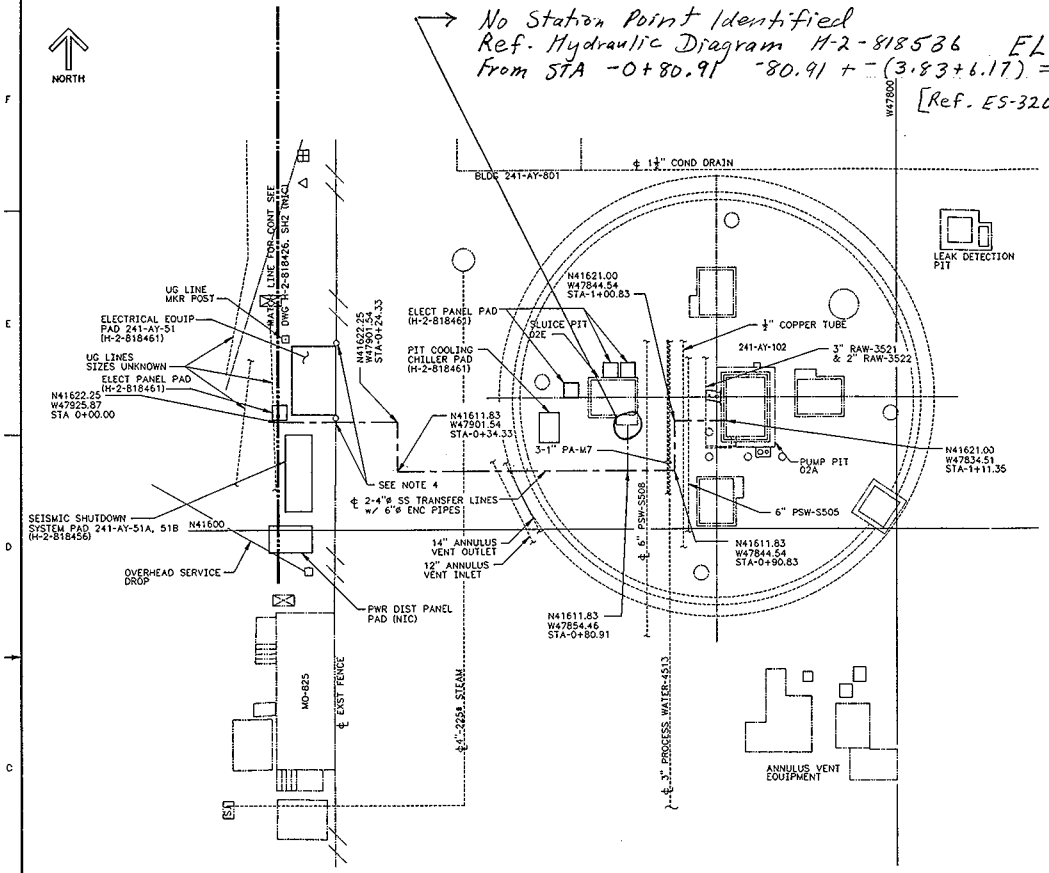

PLAN
SCALE: 1"=10'-0"

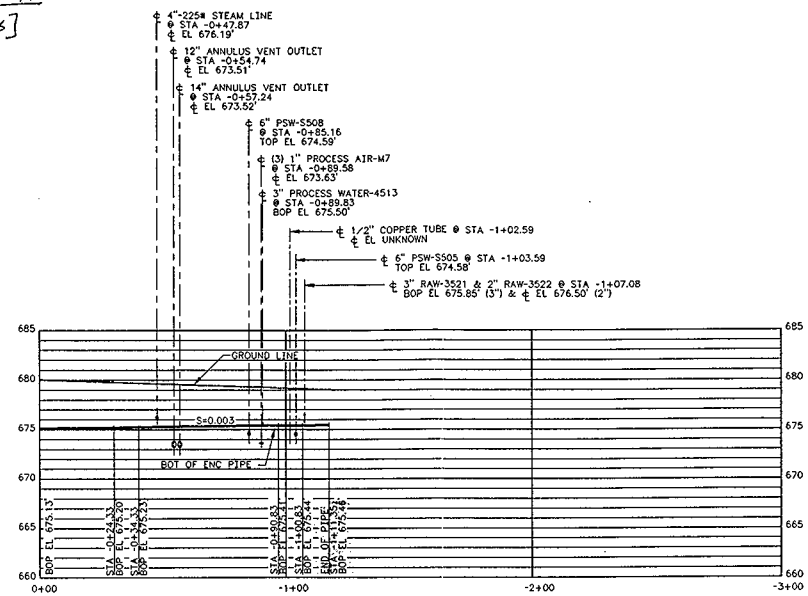

PROFILE
SCALE: HORZ 1"=20'-0"
VERT 1"=5'-0"

NOTES:

1. FOR ADDITIONAL NOTES, SEE H-2-818432. (NIC)
2. SEE DWG H-2-818427 SH2 FOR TRANSFER LINE EXCAVATION DETAILS. (NIC)
3. EXCAVATE, BACKFILL AND COMPACT FOR TRANSFER LINES IN ACCORDANCE WITH SPEC. SECTION 02225.
4. MODIFICATIONS AND REPAIRS TO EXST AY-FARM PERIMETER FENCE SHALL BE IN ACCORDANCE WITH SPEC. SECTION 02831.

EXPIRES 03-03-98

HNF-2477, Rev. 0
Page B-61

-10 0 10 20
SCALE IN FEET

H-2-818423 DRAWING LIST SH6

NUMBER	TITLE

DRAWING TRACEABILITY LIST

NUMBER	TITLE

NEXT USED ON

REV NO.	DESCRIPTION	REV BY DATE	HEN APPROVALS

REVISIONS

CAD FILE BB18434A CAD CODE 2J:JBM:ACD2:12.0:NN SHEET N

APPROVED FOR IMPLEMENTATION
BY
FOR WHC DATE

USE	CONSTRUCTION		
DESIGNED PC BRINKMAN	SAFETY CLASS 3	CST	
DRAW ENGR	U.S. DEPARTMENT OF ENERGY RICHLAND OPERATIONS OFFICE 1CF KAISER HANFORD COMPANY		
CHECKED			
SAFETY SEE DR/AT FORM	CIVIL 241-AY-102 TRANSFER SYSTEM PLAN & PROFILE		
SHOP SEE DR/AT FORM			
DWG DRFT SEE DR/AT FORM			
LEAD ENGR			
REVISION NO. 5	PROJECT W-320 TANK 241-C-106 SLUICING		
DATE 6/21/95	SUBSYSTEM F	FUNCT. NO. 241-AY	DWG NO. 0302
	H-2-818434	REV NO. 0	
SCALE SHOWN	JOB NO. ER4319	SHEET 1 OF 1	
2 PLOT SCALE: 1=20	KEHCAD	1	

SEA 6200.00 #03/94
STRT#2491: 1994G003.0400

Appendix E

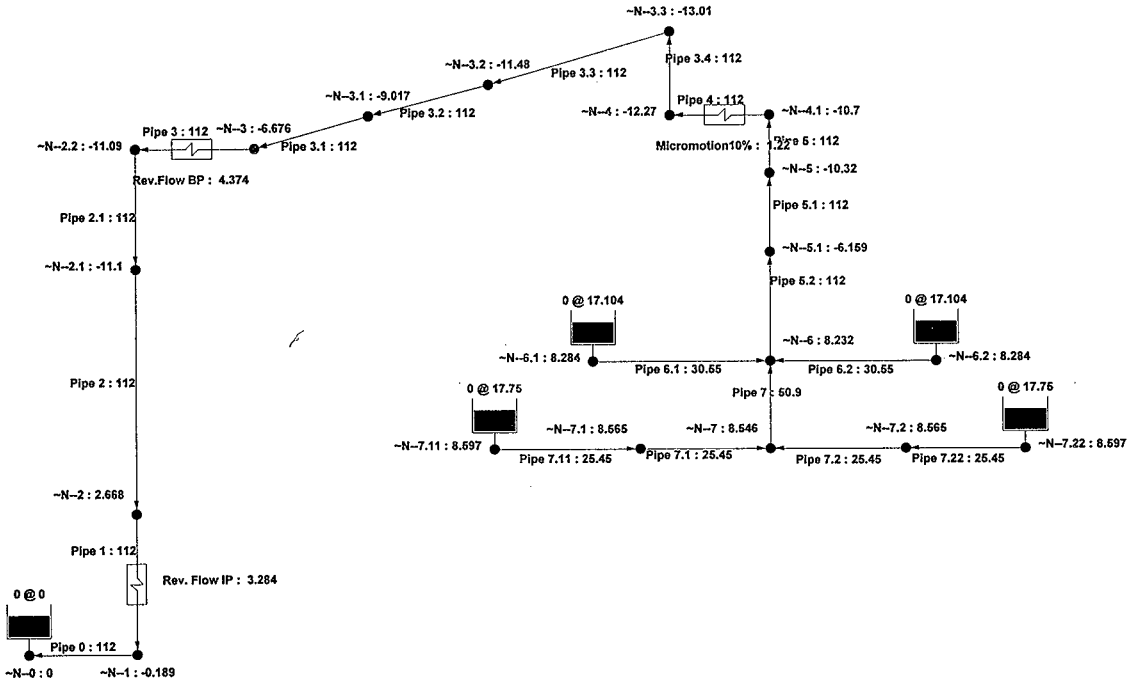

Company:	Fluor Daniel Northwest	03/13/97	3:52 pm
Project:	W-320 Anti-Siphon Calculation	**Linelist:**	SIPH10%1
by:	D. L. Stone DLS	**Lineup:**	SIPH10%1
Comments:	Slurry Line Siphoning 10% Solids	**flow rate:**	gpm
		pressure:	psig
Version:	PIPE-FLO ver 5.01	**level & grade:**	ft

Company: Fluor Daniel Northwest
Project: W-320 Anti-Siphon Calculation
by: D. L. Stone

03/13/97 3:52 pm
Lineup: SIPH10%1
rev: 03/13/97 3:50 pm

System: SIPH10%1
rev: 03/13/97 3:48 pm

Deviation: 0.000354 %
after: 9 iterations

Slurry Line - Siphon - 10% Solids - configuration 1

Volumetric flow rates require constant fluid properties in all pipelines. Fluid properties in the first specification were used in this calculation.

LINEUP SUMMARIES

PIPELINE		FLOW gpm	PRESSURE SOURCE	SET psi g	LEVEL ft
Pipe 0	>>>	112	~N--0	0	0
Pipe 6.1	<<<	30.55	~N--6.1	0	17.1
Pipe 6.2	<<<	30.55	~N--6.2	0	17.1
Pipe 7.11	<<<	25.45	~N--7.11	0	17.75
Pipe 7.22	<<<	25.45	~N--7.22	0	17.75

Flows IN: 112 gpm
Flows OUT: 112 gpm

NET FLOWS: 0 gpm

NODE	ELEVATION ft	DEMAND gpm	PRESSURE psi g	H GRADE ft
~N--0	608		0 (source)	608
~N--1	608.443		-0.189	608.1
~N--2	609.838		2.668	615.3
~N--2.1	639.107		-11.1	616.2
~N--2.2	639.107		-11.09	616.2
~N--3	639.461		-6.676	625.7
~N--3.1	650.42		-9.017	631.8
~N--3.2	661.63		-11.48	637.9
~N--3.3	676.05		-13.01	649.2
~N--4	674.769		-12.27	649.4
~N--4.1	674.769		-10.7	652.7
~N--5	674.269		-10.32	653
~N--5.1	665.8		-6.159	653.1
~N--6	636.556		8.232	653.6
~N--6.1	636.556		8.284 (source)	653.7
~N--6.2	636.556		8.284 (source)	653.7
~N--7	635.91		8.546	653.6
~N--7.1	635.91		8.565	653.6
~N--7.11	635.91		8.597 (source)	653.7
~N--7.2	635.91		8.565	653.6
~N--7.22	635.91		8.597 (source)	653.7

PIPELINE	FROM	TO	FLOW gpm	VEL ft/sec	dP psi g	HL ft
pe 0	~N--1	~N--0	112	* 1.798	(0.189)	0.052
Pipe 1	~N--2	~N--1	112	* 4.864	2.858	7.296
----- Rev. Flow IP ----- dP: 3.284 HL: 6.781						
Pipe 2	~N--2.1	~N--2	112	* 2.825	(13.77)	0.847
Pipe 2.1	~N--2.2	~N--2.1	112	* 2.825	0.006	0.013
Pipe 3	~N--3	~N--2.2	112	* 4.864	4.415	9.469
----- Rev.Flow BP ----- dP: 4.374 HL: 9.031						
Pipe 3.1	~N--3.1	~N--3	112	* 2.825	(2.341)	6.125
Pipe 3.2	~N--3.2	~N--3.1	112	* 2.825	(2.462)	6.126
Pipe 3.3	~N--3.3	~N--3.2	112	* 2.825	(1.528)	11.26
Pipe 3.4	~N--4	~N--3.3	112	* 2.825	0.739	0.244
Pipe 4	~N--4.1	~N--4	112	* 4.864	1.574	3.251
----- Micromotion10% ----- dP: 1.22 HL: 2.518						
Pipe 5	~N--5	~N--4.1	112	* 2.825	0.375	0.274
Pipe 5.1	~N--5.1	~N--5	112	* 3.128	4.161	0.123
Pipe 5.2	~N--6	~N--5.1	112	* 3.128	14.39	0.470
Pipe 6.1	~N--6.1	~N--6	30.55	* 3.322	0.052	0.107
Pipe 6.2	~N--6.2	~N--6	30.55	* 3.322	0.052	0.107
Pipe 7	~N--7	~N--6	50.9	* 1.422	0.314	0.003
Pipe 7.1	~N--7.1	~N--7	25.45	* 0.711	0.019	0.040
Pipe 7.11	~N--7.11	~N--7.1	25.45	* 2.767	0.031	0.065
Pipe 7.2	~N--7.2	~N--7	25.45	* 0.711	0.019	0.040
Pipe 7.22	~N--7.22	~N--7.2	25.45	* 2.767	0.031	0.065

Company: Fluor Daniel Northwest
Project: W-320 Anti-Siphon Calculation
by: D. L. Stone

03/13/97 3:53 pm
System: SIPH10%1
rev: 03/13/97 3:48 pm

SYSTEM REPORT

Created: 01/24/97 1:41 pm
Design file:
Pipe Specs: 2

Pipes: 20
Nodes: 21
Pumps/Comps: 3

Slurry Line - Siphoning - 10% Solids (70F) - configuration 1

SYSTEM NODES

NODE	ELEVATION ft	PIPELINES IN	PIPELINES OUT
~N--0	608	Pipe 0	
~N--1	608.443	Pipe 1	Pipe 0
~N--2	609.838	Pipe 2	Pipe 1
~N--2.1	639.107	Pipe 2.1	Pipe 2
~N--2.2	639.107	Pipe 3	Pipe 2.1
~N--3	639.461	Pipe 3.1	Pipe 3
~N--3.1	650.42	Pipe 3.2	Pipe 3.1
~N--3.2	661.63	Pipe 3.3	Pipe 3.2
~N--3.3	676.05	Pipe 3.4	Pipe 3.3
~N--4	674.769	Pipe 4	Pipe 3.4
~N--4.1	674.769	Pipe 5	Pipe 4
~N--5	674.269	Pipe 5.1	Pipe 5
~N--5.1	665.8	Pipe 5.2	Pipe 5.1
~N--6	636.556	Pipe 6.1 Pipe 6.2 Pipe 7	Pipe 5.2
~N--6.1	636.556		Pipe 6.1
~N--6.2	636.556		Pipe 6.2
~N--7	635.91	Pipe 7.1 Pipe 7.2	Pipe 7
~N--7.1	635.91	Pipe 7.11	Pipe 7.1
~N--7.11	635.91		Pipe 7.11
~N--7.2	635.91	Pipe 7.22	Pipe 7.2
~N--7.22	635.91		Pipe 7.22

PIPELINE	SPEC	FROM_NODE	TO_NODE	PUMP/COMP
Pipe 0	01	~N--1	~N--0	
Pipe 1	01	~N--2	~N--1	Rev. Flow IP
Pipe 2	01	~N--2.1	~N--2	
Pipe 2.1	01	~N--2.2	~N--2.1	
Pipe 3	01	~N--3	~N--2.2	Rev.Flow BP
Pipe 3.1	01	~N--3.1	~N--3	
Pipe 3.2	01	~N--3.2	~N--3.1	
Pipe 3.3	01	~N--3.3	~N--3.2	
Pipe 3.4	01	~N--4	~N--3.3	
Pipe 4	01	~N--4.1	~N--4	Micromotion10%
Pipe 5	01	~N--5	~N--4.1	
Pipe 5.1	02	~N--5.1	~N--5	
Pipe 5.2	02	~N--6	~N--5.1	
Pipe 6.1	02	~N--6.1	~N--6	
Pipe 6.2	02	~N--6.2	~N--6	
Pipe 7	02	~N--7	~N--6	
Pipe 7.1	02	~N--7.1	~N--7	
Pipe 7.11	02	~N--7.11	~N--7.1	
Pipe 7.2	02	~N--7.2	~N--7	
Pipe 7.22	02	~N--7.22	~N--7.2	

PUMP/COMP	PERFORMANCE DATA					
Micromotion10%	gpm:	0	50	150	250	350
	ft:	0	0.702	3.714	9.286	17.128
	eqn:	0.00113187 Q ^ 1.63348				
Rev. Flow IP	gpm:	0	40	80	120	150
	ft:	0	0.86	3.45	7.78	12.2
	eqn:	0.000525277 Q ^ 2.00609				
Rev.Flow BP	gpm:	0	40	80	120	150
	ft:	0	1.15	4.59	10.4	16.2
	eqn:	0.000711089 Q ^ 2.00264				

Company: Fluor Daniel Northwest
Project:
by: D. L. Stone

03/17/97 7:20 am
System: SIPH10%1
rev: 03/17/97 7:16 am

PIPELIST REPORT

Created: 01/24/97 1:41 pm
Design file:
Pipe Specs: 2

Pipes: 20
Nodes: 21
Pumps/Comps: 3

Slurry Line - Siphoning - 10% Solids (70F) - configuration 1

SPECIFICATIONS

SPECIFICATION	PIPE MATERIAL Sch / Roughness	FLUID Temp / Pres	VALVE TABLE	DESIGN LIMITS Vel / Pres
01 10% Sch 40 rev: 03/13/97 3:07 pm	Steel Sch 40 0.0018 in Size for: 6 ft/sec	10% solids 70 °F 0 psi g	Standard	6 - 10 ft/sec -14.4 - 300 psi g
02 10% Sch 80 rev: 03/17/97 7:16 am	Steel Sch 80 0.0018 in Size for: 6 ft/sec	10% solids 70 °F 0 psi g	Standard	6 - 10 ft/sec -14.4 - 300 psi g

PIPELINE	SPEC	MATERIAL Size / Sch	LENGTH ft	FLUID Temp / Pres	VALVES Total-K
Pipe 0	01	Steel 5 in / 40	0.442	10% solids 70 °F / 0 psi g	1
Pipe 1	01	Steel 3 in / 40	2.323	10% solids 70 °F / 0 psi g	1.112
Pipe 2	01	Steel 4 in / 40	34.861	10% solids 70 °F / 0 psi g	3.303
Pipe 2.1	01	Steel 4 in / 40	1	10% solids 70 °F / 0 psi g	0
Pipe 3	01	Steel 3 in / 40	4.767	10% solids 70 °F / 0 psi g	0.5971
Pipe 3.1	01	Steel 4 in / 40	427.608	10% solids 70 °F / 0 psi g	6.059
Pipe 3.2	01	Steel 4 in / 40	468.1	10% solids 70 °F / 0 psi g	1.956
Pipe 3.3	01	Steel 4 in / 40	843.2	10% solids 70 °F / 0 psi g	5.379
Pipe 3.4	01	Steel 4 in / 40	1.424	10% solids 70 °F / 0 psi g	1.828
Pipe 4	01	Steel 3 in / 40	3.155	10% solids 70 °F / 0 psi g	1.6
Pipe 5	01	Steel 4 in / 40	3.841	10% solids 70 °F / 0 psi g	1.824
Pipe 5.1	02	Steel 4 in / 80	7.667	10% solids 70 °F / 0 psi g	0
Pipe 5.2	02	Steel 4 in / 80	29.354	10% solids 70 °F / 0 psi g	0
Pipe 6.1	02	Steel 2 in / 80	0.5	10% solids 70 °F / 0 psi g	0.5
Pipe 6.2	02	Steel 2 in / 80	0.5	10% solids 70 °F / 0 psi g	0.5
Pipe 7	02	Steel 4 in / 80	0.65	10% solids 70 °F / 0 psi g	0
Pipe 7.1	02	Steel 4 in / 80	0.51	10% solids 70 °F / 0 psi g	4.997
Pipe 7.11	02	Steel 2 in / 80	0.17	10% solids 70 °F / 0 psi g	0.5
Pipe 7.2	02	Steel 4 in / 80	0.51	10% solids 70 °F / 0 psi g	4.997
Pipe 7.22	02	Steel 2 in / 80	0.17	10% solids 70 °F / 0 psi g	0.5

Company: Fluor Daniel Northwest
Project: W-320 Anti-Siphon Calculation
by: D. L. Stone

03/13/97 3:54 pm
System: SIPH10%1
rev: 03/13/97 3:48 pm

MATERIALS REPORT

Created: 01/24/97 1:41 pm
Design file:
Pipe Specs: 2

Pipes: 20
Nodes: 21
Pumps/Comps: 3

Slurry Line - Siphoning - 10% Solids (70F) - configuration 1

PIPE MATERIALS LIST

PIPELINE	SPEC	MATERIAL Size / Sch	LENGTH ft	VALVES & FITTINGS
Pipe 0	01	Steel 5 in / 40	0.442	1-Exit Projecting
Pipe 1	01	Steel 3 in / 40	2.323	3-Elbow Short - r/d 1 @ 90° 1-Reducer Enlargement 4 X 3
Pipe 2	01	Steel 4 in / 40	34.861	1-Elbow Short - r/d 1 @ 45° 5-Elbow Short - r/d 1 @ 90° 2-Elbow Long - r/d 1.5 @ 90° 1-Mitre Bend @ 90° @ 90°
Pipe 2.1	01	Steel 4 in / 40	1	
Pipe 3	01	Steel 3 in / 40	4.767	1-Reducer Contraction 4 X 3 1-Reducer Enlargement 4 X 3 2-Elbow Long - r/d 1.5 @ 90°
Pipe 3.1	01	Steel 4 in / 40	427.608	2-Mitre Bend @ 90° 3-Elbow Long - r/d 1.5 @ 90° 6-Pipe Bend r/d 10 @ 90° 2-Pipe Bend r/d 8 @ 45°
Pipe 3.2	01	Steel 4 in / 40	468.1	4-Pipe Bend r/d 10 @ 90°
Pipe 3.3	01	Steel 4 in / 40	843.2	11-Pipe Bend r/d 10 @ 90°
Pipe 3.4	01	Steel 4 in / 40	1.424	1-Mitre Bend @ 90° 1-Elbow Long - r/d 1.5 @ 90° 1-Reducer Contraction 4 X 3
Pipe 4	01	Steel 3 in / 40	3.155	1-Fixed K 1.357 1-Elbow Long - r/d 1.5 @ 90°
Pipe 5	01	Steel 4 in / 40	3.841	3-Elbow Long - r/d 1.5 @ 90° 1-Mitre Bend @ 90° 1-Reducer Enlargement 4 X 3
Pipe 5.1	02	Steel 4 in / 80	7.667	

PIPELINE	SPEC	MATERIAL Size / Sch	LENGTH ft	VALVES & FITTINGS
Pipe 5.2	02	Steel 4 in / 80	29.354	
Pipe 6.1	02	Steel 2 in / 80	0.5	1-Entrance Sharp-Edged
Pipe 6.2	02	Steel 2 in / 80	0.5	1-Entrance Sharp-Edged
Pipe 7	02	Steel 4 in / 80	0.65	
Pipe 7.1	02	Steel 4 in / 80	0.51	1-Reducer Enlargement 4 X 2
Pipe 7.11	02	Steel 2 in / 80	0.17	1-Entrance Sharp-Edged
Pipe 7.2	02	Steel 4 in / 80	0.51	1-Reducer Enlargement 4 X 2
Pipe 7.22	02	Steel 2 in / 80	0.17	1-Entrance Sharp-Edged

PIPE SUMMARY 03/13/97 3:54 pm

PIPE MATERIAL	SCHEDULE	SIZE	LENGTH
Steel	40	3 in	10.245 ft
		4 in	1780.03 ft
		5 in	0.442 ft
Steel	80	2 in	1.34 ft
		4 in	38.691 ft

VALVE & FITTING SUMMARY

SPECIFICATION	MATERIAL	SCHEDULE	VALVES & FITTINGS
01 10% Sch 40	Steel	40	
	Size: 3 in		3-Elbow Short - r/d 1 @ 90°
			2-Reducer Enlargement 4 X 3
			1-Reducer Contraction 4 X 3
			3-Elbow Long - r/d 1.5 @ 90°
			1-Fixed K 1.357
	Size: 4 in		1-Elbow Short - r/d 1 @ 45°
			5-Elbow Short - r/d 1 @ 90°
			9-Elbow Long - r/d 1.5 @ 90°
			5-Mitre Bend @ 90° @ 90°
			21-Pipe Bend r/d 10 @ 90°
			2-Pipe Bend r/d 8 @ 45°
			1-Reducer Contraction 4 X 3
			1-Reducer Enlargement 4 X 3
	Size: 5 in		1-Exit Projecting
02 10% Sch 80	Steel	80	
	Size: 2 in		4-Entrance Sharp-Edged
	Size: 4 in		2-Reducer Enlargement 4 X 2

Company: Fluor Daniel Northwest
Project:
by: D. L. Stone

03/17/97 7:23 am
System: SIPH10%1
rev: 03/17/97 7:16 am

PIPELINE REPORT

Pipe 5 rev: 03/13/97 2:50 pm

PIPING MATERIAL: Steel
Schedule: 40
abs roughness: 0.0018 in

PIPE SIZE: 4 in
dia: 4.026 in

LENGTH: 3.841 ft

ELEVATION in: 674.269 ft
out: 674.769 ft

SPECIFICATION: 10% Sch 40

SIZING Criteria: 6 ft/sec

LIMITS Velocity: 6 to 10 ft/sec
Pressure: -14.4 to 300 psi g

FLUID 10% solids at tmp: 70 °F
pres: 0 psi g
den: 69.78 lb/ft³
vsc: 12.87 cpois

PIPELINE RESISTANCE CURVE

Flow gpm	ffp	Vel ft/sec	dP psi
112	.0341	2.825	0.375
0	.0000	0	0.242
33.04	.0494	0.833	0.255
66.08	.0396	1.667	0.290
99.12	.0352	2.5	0.347
132.2	.0326	3.333	0.426
165.2	.0308	4.167	0.526
198.2	.0294	5	0.648
231.3	.0284	5.833	0.792
264.3	.0275	6.667	0.956
297.4	.0268	7.5	1.143
330.4	.0262	8.333	1.35
363.4	.0257	9.167	1.579
396.5	.0252	10	1.829

VALVES and FITTINGS

VALVE / FITTING	K-VALUE	VALVE / FITTING	K-VALUE
Elbow Long - r/d 1.5 90°	3@0.2282	Mitre Bend @ 90°	0.978
Reducer Enlargement 4x3x4	0.1612		

FFT: 0.0163 TOTAL K: 1.824 Avg Percent of Total Loss: 84 %

Appendix F

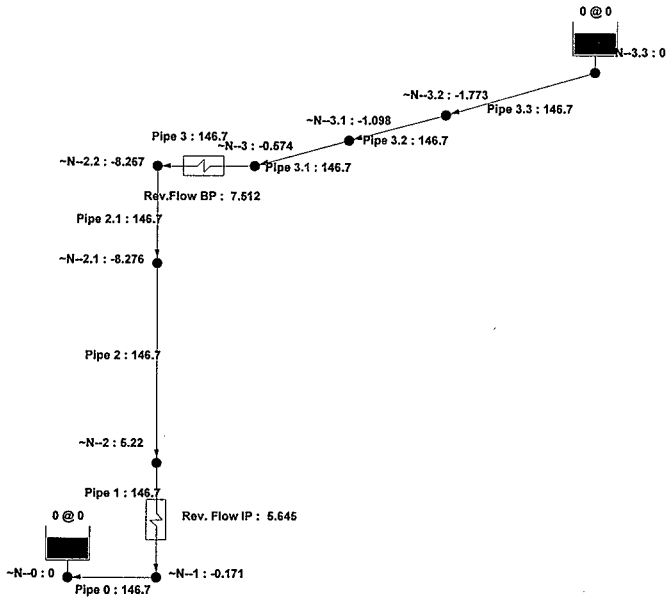

Company:	Fluor Daniel Northwest	03/17/97	12:42 pm
Project:	W-320 Anti-Siphon and Drainflow	**Linelist:**	DRAN10%1
by:	D. L. Stone DLS	**Lineup:**	DRAN10%1
Comments:	Slurry Line Drainflow - Highpoint to Endpoint - 10% Solids	**flow rate:**	gpm
		pressure:	psig
Version:	PIPE-FLO ver 5.01	**level & grade:**	ft

Company: Fluor Daniel Northwest
Project: W-320 Anti-Siphon and Drainflow
by: D. L. Stone

03/17/97 12:42 pm
Lineup: DRAN10%1
rev: 03/17/97 12:40 pm

System: DRAN10%1
rev: 03/17/97 7:36 am

Deviation: 0.0011 %
after: 4 iterations

Slurry Line - Drain from High to Endpoint - 10% Solids (70F)

Volumetric flow rates require constant fluid properties in all pipelines. Fluid properties in the first specification were used in this calculation.

LINEUP SUMMARIES

PIPELINE		FLOW gpm	PRESSURE SOURCE	SET psi g	LEVEL ft
Pipe 0	>>>	146.7	~N--0	0	0
Pipe 3.3	<<<	146.7	~N--3.3	0	0

Flows IN: 146.7 gpm
Flows OUT: 146.7 gpm

NET FLOWS: 0 gpm

NODE	ELEVATION ft	DEMAND gpm	PRESSURE psi g	H GRADE ft
~N--0	608		0 (source)	608
~N--1	608.443		-0.171	608.1
~N--2	609.838		5.22	620.6
~N--2.1	639.107		-8.276	622
~N--2.2	639.107		-8.267	622
~N--3	639.461		-0.574	638.3
~N--3.1	650.42		-1.098	648.2
~N--3.2	661.63		-1.773	658
~N--3.3	676.05		0 (source)	676

PIPELINE	FROM	TO	FLOW gpm	VEL ft/sec	dP psi g	HL ft
›e 0	~N--1	~N--0	146.7	* 2.355	(0.171)	0.089
Pipe 1	~N--2	~N--1	146.7	6.372	5.392	12.53
----- Rev. Flow IP ----- dP: 5.645 HL: 11.66						
Pipe 2	~N--2.1	~N--2	146.7	* 3.701	(13.5)	1.402
Pipe 2.1	~N--2.2	~N--2.1	146.7	* 3.701	0.010	0.020
Pipe 3	~N--3	~N--2.2	146.7	6.372	7.693	16.24
----- Rev.Flow BP ----- dP: 7.512 HL: 15.51						
Pipe 3.1	~N--3.1	~N--3	146.7	* 3.701	(0.524)	9.876
Pipe 3.2	~N--3.2	~N--3.1	146.7	* 3.701	(0.674)	9.818
Pipe 3.3	~N--3.3	~N--3.2	146.7	* 3.701	1.773	18.08

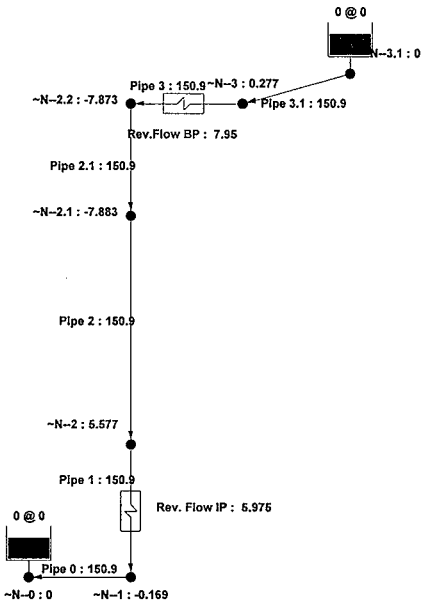

Company:	Fluor Daniel Northwest	03/17/97	1:03 pm
Project:	W-320 Anti-Siphon and Drainflow	**Linelist:**	DRAN10%2
by:	D. L. Stone DLS	**Lineup:**	DRAN10%2
Comments:	Slurry Line Drainflow - Lowpoint to Endpoint - 10% Solids	**flow rate:**	gpm
		pressure:	psig
Version:	PIPE-FLO ver 5.01	**level & grade:**	ft

Company: Fluor Daniel Northwest
Project: W-320 Anti-Siphon and Drainflow
by: D. L. Stone

03/17/97 1:03 pm
Lineup: DRAN10%2
rev: 03/17/97 1:02 pm

System: DRAN10%2
rev: 03/17/97 12:43 pm

Deviation: 0.000921 %
after: 5 iterations

Slurry Line - Drain from Stationpoint to Endpoint - 10% Solids (70F)

Volumetric flow rates require constant fluid properties in all pipelines. Fluid properties in the first specification were used in this calculation.

LINEUP SUMMARIES

PIPELINE		FLOW gpm	PRESSURE SOURCE	SET psi g	LEVEL ft
Pipe 0	>>>	150.9	~N--0	0	0
Pipe 3.1	<<<	150.9	~N--3.1	0	0

Flows IN: 150.9 gpm
Flows OUT: 150.9 gpm

NET FLOWS: 0 gpm

NODE	ELEVATION ft	DEMAND gpm	PRESSURE psi g	H GRADE ft
A System Component is out of range - results may not be valid.				
~N--0	608		0 (source)	608
~N--1	608.443		-0.169	608.1
~N--2	609.838		5.577	621.4
~N--2.1	639.107		-7.883	622.8
~N--2.2	639.107		-7.873	622.9
~N--3	639.461		0.277	640
~N--3.1	650.42		0 (source)	650.4

PIPELINE	FROM	TO	FLOW gpm	VEL ft/sec	dP psi g	HL ft
A System Component is out of range - results may not be valid.						
Pipe 0	~N--1	~N--0	150.9	* 2.422	(0.169)	0.094
Pipe 1	~N--2	~N--1	150.9	6.555	5.746	13.26
----- Rev. Flow IP (out of range)----- dP: 5.975 HL: 12.34						
Pipe 2	~N--2.1	~N--2	150.9	* 3.807	(13.46)	1.478
Pipe 2.1	~N--2.2	~N--2.1	150.9	* 3.807	0.010	0.021
Pipe 3	~N--3	~N--2.2	150.9	6.555	8.15	17.18
----- Rev.Flow BP (out of range)----- dP: 7.95 HL: 16.41						
Pipe 3.1	~N--3.1	~N--3	150.9	* 3.807	(0.277)	10.39

Appendix G

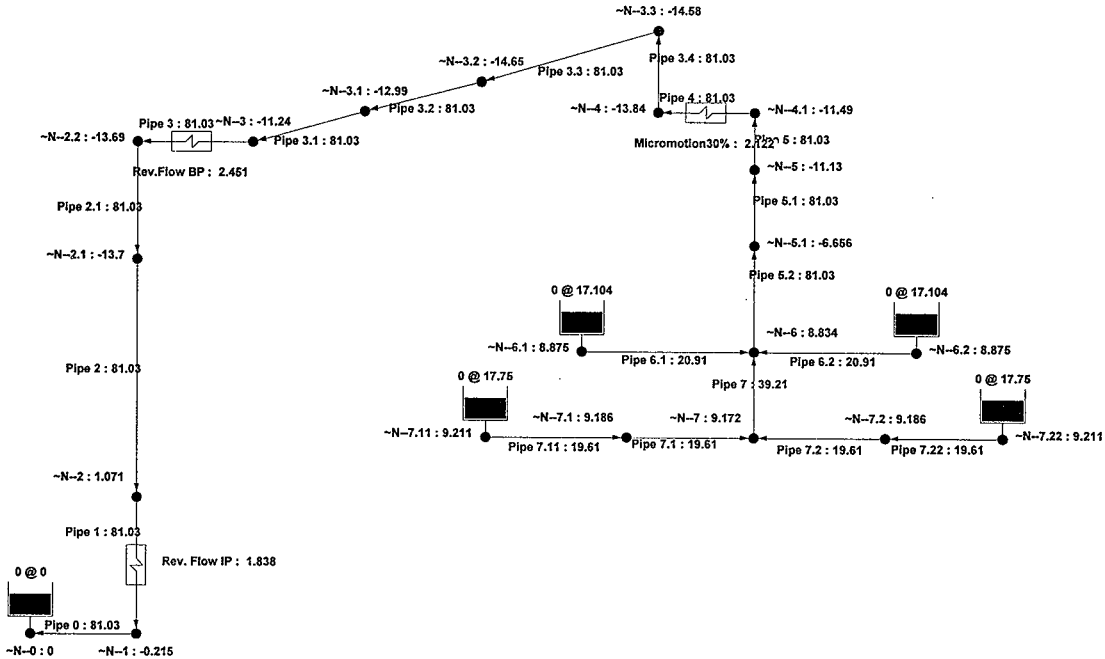

Company:	Fluor Daniel Northwest	03/13/97	3:56 pm
Project:	W-320 Anti-Siphon Calculation	**Linelist:**	SIPH30%1
by:	D. L. Stone DLS	**Lineup:**	SIPH30%1
Comments:	Slurry Line Siphoning 30% Solids	**flow rate:**	gpm
		pressure:	psig
Version:	PIPE-FLO ver 5.01	**level & grade:**	ft

Company: Fluor Daniel Northwest
Project: W-320 Anti-Siphon Calculation
by: D. L. Stone

03/13/97 4:07 pm
Lineup: SIPH30%1
rev: 03/13/97 3:56 pm

System: SIPH30%1
rev: 03/13/97 3:47 pm

Deviation: 0.0044 %
after: 12 iterations

Slurry Line - Siphon - 30% Solids (70F) -configuration 1

Volumetric flow rates require constant fluid properties in all pipelines. Fluid properties in the first specification were used in this calculation.

LINEUP SUMMARIES

PIPELINE		FLOW gpm	PRESSURE SOURCE	SET psi g	LEVEL ft
Pipe 0	>>>	81.03	~N--0	0	0
Pipe 6.1	<<<	20.91	~N--6.1	0	17.1
Pipe 6.2	<<<	20.91	~N--6.2	0	17.1
Pipe 7.11	<<<	19.61	~N--7.11	0	17.75
Pipe 7.22	<<<	19.61	~N--7.22	0	17.75

Flows IN: 81.04 gpm
Flows OUT: 81.03 gpm

NET FLOWS IN: 0.010 gpm

NODE	ELEVATION ft	DEMAND gpm	PRESSURE psi g	H GRADE ft
~N--0	608		0 (source)	608
~N--1	608.443		-0.215	608
~N--2	609.838		1.071	611.9
~N--2.1	639.107		-13.7	612.7
~N--2.2	639.107		-13.69	612.7
~N--3	639.461		-11.24	617.8
~N--3.1	650.42		-12.99	625.4
~N--3.2	661.63		-14.65 ***	633.4
~N--3.3	676.05		-14.58 ***	648
~N--4	674.769		-13.84	648.1
~N--4.1	674.769		-11.49	652.6
~N--5	674.269		-11.13	652.8
~N--5.1	665.8		-6.656	653
~N--6	636.556		8.834	653.6
~N--6.1	636.556		8.875 (source)	653.7
~N--6.2	636.556		8.875 (source)	653.7
~N--7	635.91		9.172	653.6
~N--7.1	635.91		9.186	653.6
~N--7.11	635.91		9.211 (source)	653.7
~N--7.2	635.91		9.186	653.6
~N--7.22	635.91		9.211 (source)	653.7

PIPELINE	FROM	TO	FLOW gpm	VEL ft/sec	dP psi g	HL ft
›e 0	~N--1	~N--0	81.03	* 1.301	(0.215)	0.029
Pipe 1	~N--2	~N--1	81.03	* 3.519	1.285	3.872
----- Rev. Flow IP ----- dP: 1.838 HL: 3.543						
Pipe 2	~N--2.1	~N--2	81.03	* 2.044	(14.77)	0.801
Pipe 2.1	~N--2.2	~N--2.1	81.03	* 2.044	0.009	0.017
Pipe 3	~N--3	~N--2.2	81.03	* 3.519	2.451	5.076
----- Rev.Flow BP ----- dP: 2.451 HL: 4.724						
Pipe 3.1	~N--3.1	~N--3	81.03	* 2.044	(1.746)	7.595
Pipe 3.2	~N--3.2	~N--3.1	81.03	* 2.044	(1.66)	8.011
Pipe 3.3	~N--3.3	~N--3.2	81.03	* 2.044	0.068	14.55
Pipe 3.4	~N--4	~N--3.3	81.03	* 2.044	0.739	0.142
Pipe 4	~N--4.1	~N--4	81.03	* 3.519	2.355	4.538
----- Micromotion30% ----- dP: 2.122 HL: 4.09						
Pipe 5	~N--5	~N--4.1	81.03	* 2.044	0.354	0.183
Pipe 5.1	~N--5.1	~N--5	81.03	* 2.263	4.477	0.158
Pipe 5.2	~N--6	~N--5.1	81.03	* 2.263	15.49	0.606
Pipe 6.1	~N--6.1	~N--6	20.91	* 2.273	0.042	0.080
Pipe 6.2	~N--6.2	~N--6	20.91	* 2.274	0.042	0.080
Pipe 7	~N--7	~N--6	39.21	* 1.095	0.339	0.006
Pipe 7.1	~N--7.1	~N--7	19.61	* 0.548	0.013	0.026
›pe 7.11	~N--7.11	~N--7.1	19.61	* 2.132	0.025	0.048
Pipe 7.2	~N--7.2	~N--7	19.61	* 0.548	0.013	0.026
Pipe 7.22	~N--7.22	~N--7.2	19.61	* 2.132	0.025	0.048

Company: Fluor Daniel Northwest
Project: W-320 Anti-Siphon Calculation
by: D. L. Stone

03/13/97 4:07 pm
System: SIPH30%1
rev: 03/13/97 3:47 pm

SYSTEM REPORT

Created: 01/24/97 1:41 pm
Design file:
Pipe Specs: 2

Pipes: 20
Nodes: 21
Pumps/Comps: 3

Slurry Line - Siphoning - 30% Solids (70F) - configuration 1

SYSTEM NODES

NODE	ELEVATION ft	PIPELINES IN	PIPELINES OUT
~N--0	608	Pipe 0	
~N--1	608.443	Pipe 1	Pipe 0
~N--2	609.838	Pipe 2	Pipe 1
~N--2.1	639.107	Pipe 2.1	Pipe 2
~N--2.2	639.107	Pipe 3	Pipe 2.1
~N--3	639.461	Pipe 3.1	Pipe 3
~N--3.1	650.42	Pipe 3.2	Pipe 3.1
~N--3.2	661.63	Pipe 3.3	Pipe 3.2
~N--3.3	676.05	Pipe 3.4	Pipe 3.3
~N--4	674.769	Pipe 4	Pipe 3.4
~N--4.1	674.769	Pipe 5	Pipe 4
~N--5	674.269	Pipe 5.1	Pipe 5
~N--5.1	665.8	Pipe 5.2	Pipe 5.1
~N--6	636.556	Pipe 6.1 Pipe 6.2 Pipe 7	Pipe 5.2
~N--6.1	636.556		Pipe 6.1
~N--6.2	636.556		Pipe 6.2
~N--7	635.91	Pipe 7.1 Pipe 7.2	Pipe 7
~N--7.1	635.91	Pipe 7.11	Pipe 7.1
~N--7.11	635.91		Pipe 7.11
~N--7.2	635.91	Pipe 7.22	Pipe 7.2
~N--7.22	635.91		Pipe 7.22

SYSTEM PIPES 03/13/97 4:07 pm

PIPELINE	SPEC	FROM_NODE	TO_NODE	PUMP/COMP
Pipe 0	03	~N--1	~N--0	
Pipe 1	03	~N--2	~N--1	Rev. Flow IP
Pipe 2	03	~N--2.1	~N--2	
Pipe 2.1	03	~N--2.2	~N--2.1	
Pipe 3	03	~N--3	~N--2.2	Rev.Flow BP
Pipe 3.1	03	~N--3.1	~N--3	
Pipe 3.2	03	~N--3.2	~N--3.1	
Pipe 3.3	03	~N--3.3	~N--3.2	
Pipe 3.4	03	~N--4	~N--3.3	
Pipe 4	03	~N--4.1	~N--4	Micromotion30%
Pipe 5	03	~N--5	~N--4.1	
Pipe 5.1	04	~N--5.1	~N--5	
Pipe 5.2	04	~N--6	~N--5.1	
Pipe 6.1	04	~N--6.1	~N--6	
Pipe 6.2	04	~N--6.2	~N--6	
Pipe 7	04	~N--7	~N--6	
Pipe 7.1	04	~N--7.1	~N--7	
Pipe 7.11	04	~N--7.11	~N--7.1	
Pipe 7.2	04	~N--7.2	~N--7	
Pipe 7.22	04	~N--7.22	~N--7.2	

PUMP/COMP	PERFORMANCE DATA					
Micromotion30%	gpm:	0	50	150	250	350
	ft:	0	2.311	7.704	19.26	33.705
	eqn:	0.0100732 Q ^ 1.36669				
Rev. Flow IP	gpm:	0	40	80	120	150
	ft:	0	0.86	3.45	7.78	12.2
	eqn:	0.000525277 Q ^ 2.00609				
Rev.Flow BP	gpm:	0	40	80	120	150
	ft:	0	1.15	4.59	10.4	16.2
	eqn:	0.000711089 Q ^ 2.00264				

Company: Fluor Daniel Northwest
Project: W-320 Anti-Siphon Calculation
by: D. L. Stone

03/13/97 4:07 pm
System: SIPH30%1
rev: 03/13/97 3:47 pm

PIPELIST REPORT

Created: 01/24/97 1:41 pm
Design file:
Pipe Specs: 2

Pipes: 20
Nodes: 21
Pumps/Comps: 3

Slurry Line - Siphoning - 30% Solids (70F) - configuration 1

SPECIFICATIONS

SPECIFICATION	PIPE MATERIAL Sch / Roughness	FLUID Temp / Pres	VALVE TABLE	DESIGN LIMITS Vel / Pres
03 30% Sch 40 rev: 03/13/97 3:34 pm	Steel Sch 40 0.0018 in Size for: 6 ft/sec	30% solids 70 °F 0 psi g	Standard	6 - 10 ft/sec -14.4 - 300 psi g
04 30% Sch 80 rev: 03/13/97 3:35 pm	Steel Sch 80 0.0018 in Size for: 6 ft/sec	30% solids 70 °F 0 psi g	Standard	6 - 10 ft/sec -14.4 - 300 psi g

PIPELINE	SPEC	MATERIAL Size / Sch	LENGTH ft	FLUID Temp / Pres	VALVES Total-K
Pipe 0	03	Steel 5 in / 40	0.442	30% solids 70 °F / 0 psi g	1
Pipe 1	03	Steel 3 in / 40	2.323	30% solids 70 °F / 0 psi g	1.112
Pipe 2	03	Steel 4 in / 40	34.861	30% solids 70 °F / 0 psi g	3.303
Pipe 2.1	03	Steel 4 in / 40	1	30% solids 70 °F / 0 psi g	0
Pipe 3	03	Steel 3 in / 40	4.767	30% solids 70 °F / 0 psi g	0.5971
Pipe 3.1	03	Steel 4 in / 40	427.608	30% solids 70 °F / 0 psi g	6.059
Pipe 3.2	03	Steel 4 in / 40	468.1	30% solids 70 °F / 0 psi g	1.956
Pipe 3.3	03	Steel 4 in / 40	843.2	30% solids 70 °F / 0 psi g	5.379
Pipe 3.4	03	Steel 4 in / 40	1.424	30% solids 70 °F / 0 psi g	1.828
Pipe 4	03	Steel 3 in / 40	3.155	30% solids 70 °F / 0 psi g	1.51
Pipe 5	03	Steel 4 in / 40	3.841	30% solids 70 °F / 0 psi g	1.824
Pipe 5.1	04	Steel 4 in / 80	7.667	30% solids 70 °F / 0 psi g	0
Pipe 5.2	04	Steel 4 in / 80	29.354	30% solids 70 °F / 0 psi g	0
Pipe 6.1	04	Steel 2 in / 80	0.5	30% solids 70 °F / 0 psi g	0.5
Pipe 6.2	04	Steel 2 in / 80	0.5	30% solids 70 °F / 0 psi g	0.5
Pipe 7	04	Steel 4 in / 80	0.65	30% solids 70 °F / 0 psi g	0
Pipe 7.1	04	Steel 4 in / 80	0.51	30% solids 70 °F / 0 psi g	4.997
Pipe 7.11	04	Steel 2 in / 80	0.17	30% solids 70 °F / 0 psi g	0.5
Pipe 7.2	04	Steel 4 in / 80	0.51	30% solids 70 °F / 0 psi g	4.997
Pipe 7.22	04	Steel 2 in / 80	0.17	30% solids 70 °F / 0 psi g	0.5

Company: Fluor Daniel Northwest
Project: W-320 Anti-Siphon Calculation
by: D. L. Stone

03/13/97 4:07 pm
System: SIPH30%1
rev: 03/13/97 3:47 pm

MATERIALS REPORT

Created: 01/24/97 1:41 pm
Design file:
Pipe Specs: 2

Pipes: 20
Nodes: 21
Pumps/Comps: 3

Slurry Line - Siphoning - 30% Solids (70F) - configuration 1

PIPE MATERIALS LIST

PIPELINE	SPEC	MATERIAL Size / Sch	LENGTH ft	VALVES & FITTINGS
Pipe 0	03	Steel 5 in / 40	0.442	1-Exit Projecting
Pipe 1	03	Steel 3 in / 40	2.323	3-Elbow Short - r/d 1 @ 90° 1-Reducer Enlargement 4 X 3
Pipe 2	03	Steel 4 in / 40	34.861	1-Elbow Short - r/d 1 @ 45° 5-Elbow Short - r/d 1 @ 90° 2-Elbow Long - r/d 1.5 @ 90° 1-Mitre Bend @ 90° @ 90°
Pipe 2.1	03	Steel 4 in / 40	1	
Pipe 3	03	Steel 3 in / 40	4.767	1-Reducer Contraction 4 X 3 1-Reducer Enlargement 4 X 3 2-Elbow Long - r/d 1.5 @ 90°
Pipe 3.1	03	Steel 4 in / 40	427.608	2-Mitre Bend @ 90° 3-Elbow Long - r/d 1.5 @ 90° 6-Pipe Bend r/d 10 @ 90° 2-Pipe Bend r/d 8 @ 45°
Pipe 3.2	03	Steel 4 in / 40	468.1	4-Pipe Bend r/d 10 @ 90°
Pipe 3.3	03	Steel 4 in / 40	843.2	11-Pipe Bend r/d 10 @ 90°
Pipe 3.4	03	Steel 4 in / 40	1.424	1-Mitre Bend @ 90° 1-Elbow Long - r/d 1.5 @ 90° 1-Reducer Contraction 4 X 3
Pipe 4	03	Steel 3 in / 40	3.155	1-Elbow Long - r/d 1.5 @ 90° 1-Fixed K 1.267
Pipe 5	03	Steel 4 in / 40	3.841	3-Elbow Long - r/d 1.5 @ 90° 1-Mitre Bend @ 90° 1-Reducer Enlargement 4 X 3
Pipe 5.1	04	Steel 4 in / 80	7.667	

PIPELINE	SPEC	MATERIAL Size / Sch	LENGTH ft	VALVES & FITTINGS
Pipe 5.2	04	Steel 4 in / 80	29.354	
Pipe 6.1	04	Steel 2 in / 80	0.5	1-Entrance Sharp-Edged
Pipe 6.2	04	Steel 2 in / 80	0.5	1-Entrance Sharp-Edged
Pipe 7	04	Steel 4 in / 80	0.65	
Pipe 7.1	04	Steel 4 in / 80	0.51	1-Reducer Enlargement 4 X 2
Pipe 7.11	04	Steel 2 in / 80	0.17	1-Entrance Sharp-Edged
Pipe 7.2	04	Steel 4 in / 80	0.51	1-Reducer Enlargement 4 X 2
Pipe 7.22	04	Steel 2 in / 80	0.17	1-Entrance Sharp-Edged

PIPE SUMMARY 03/13/97 4:07 pm

PIPE MATERIAL	SCHEDULE	SIZE	LENGTH
Steel	40	3 in	10.245 ft
		4 in	1780.03 ft
		5 in	0.442 ft
Steel	80	2 in	1.34 ft
		4 in	38.691 ft

VALVE & FITTING SUMMARY

SPECIFICATION	MATERIAL	SCHEDULE	VALVES & FITTINGS
03 30% Sch 40	Steel	40	
	Size: 3 in		3-Elbow Short - r/d 1 @ 90°
			2-Reducer Enlargement 4 X 3
			1-Reducer Contraction 4 X 3
			3-Elbow Long - r/d 1.5 @ 90°
			1-Fixed K 1.267
	Size: 4 in		1-Elbow Short - r/d 1 @ 45°
			5-Elbow Short - r/d 1 @ 90°
			9-Elbow Long - r/d 1.5 @ 90°
			5-Mitre Bend @ 90° @ 90°
			21-Pipe Bend r/d 10 @ 90°
			2-Pipe Bend r/d 8 @ 45°
			1-Reducer Contraction 4 X 3
			1-Reducer Enlargement 4 X 3
	Size: 5 in		1-Exit Projecting
04 30% Sch 80	Steel	80	
	Size: 2 in		4-Entrance Sharp-Edged
	Size: 4 in		2-Reducer Enlargement 4 X 2

Company: Fluor Daniel Northwest
Project:
by: D. L. Stone

03/17/97 7:27 am
System: SIPH30%1
rev: 03/13/97 3:47 pm

PIPELINE REPORT

Pipe 5 rev: 03/13/97 3:39 pm

PIPING MATERIAL: Steel
Schedule: 40
abs roughness: 0.0018 in

PIPE SIZE: 4 in
dia: 4.026 in

LENGTH: 3.841 ft

ELEVATION in: 674.269 ft
out: 674.769 ft

SPECIFICATION: 30% Sch 40

SIZING Criteria: 6 ft/sec

LIMITS Velocity: 6 to 10 ft/sec
Pressure: -14.4 to 300 psi g

FLUID 30% solids at tmp: 70 °F
pres: 0 psi g
den: 74.77 lb/ft³
vsc: 103.9 cpois

PIPELINE RESISTANCE CURVE

Flow gpm	ffp	Vel ft/sec	dP psi
81.03	.0872	2.044	0.354
0	.0000	0	0.260
33.04	.2139	0.833	0.283
66.08	.1069	1.667	0.328
99.12	.0713	2.5	0.392
132.2	.0535	3.333	0.477
165.2	.0428	4.167	0.583
198.2	.0356	5	0.709
231.3	.0306	5.833	0.855
264.3	.0484	6.667	1.11
297.4	.0465	7.5	1.327
330.4	.0450	8.333	1.567
363.4	.0436	9.167	1.831
396.5	.0424	10	2.119

VALVES and FITTINGS

VALVE / FITTING	K-VALUE	VALVE / FITTING	K-VALUE
Elbow Long - r/d 1.5 90°	3@0.2282	Mitre Bend @ 90°	0.978
Reducer Enlargement 4x3x4	0.1612		

FFT: 0.0163 TOTAL K: 1.824 Avg Percent of Total Loss: 73 %

PIPE-FLO ver 5.01

Appendix H

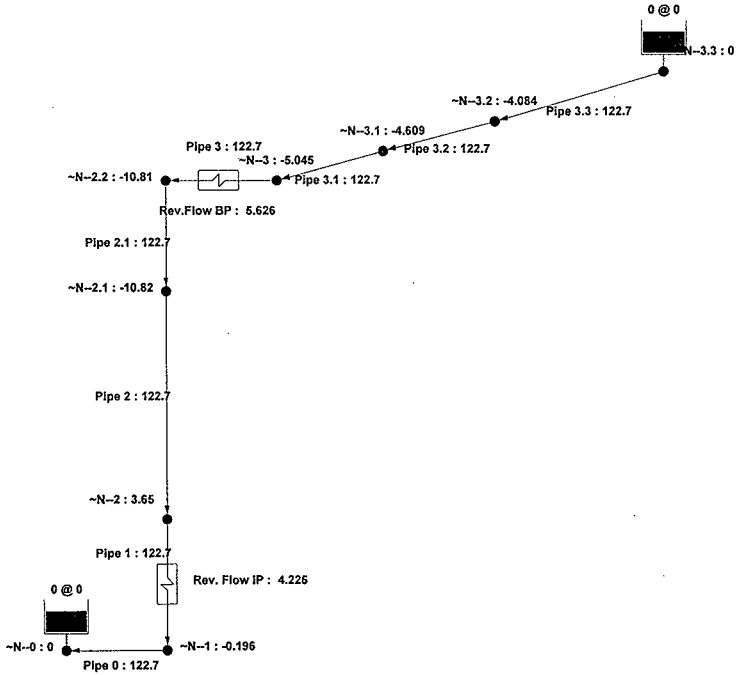

Company:	Fluor Daniel Northwest	03/17/97	1:37 pm
Project:	W-320 Anti-Siphon and Drainflow	**Linelist:**	DRAN30%1
by:	D. L. Stone DLS	**Lineup:**	DRAN30%1
Comments:	Slurry Line Drainflow - Highpoint to Endpoint - Solids 30%	**flow rate:**	gpm
		pressure:	psi_g
Version:	PIPE-FLO ver 5.01	**level & grade:**	ft

Company: Fluor Daniel Northwest
Project: W-320 Anti-Siphon and Drainflow
by: D. L. Stone

03/17/97 1:38 pm
Lineup: DRAN30%1
rev: 03/17/97 1:34 pm

System: DRAN30%1
rev: 03/17/97 1:34 pm

Deviation: 0.00418 %
after: 8 iterations

Slurry Line - Drain from High to Endpoint - 30% Solids (70F)

Volumetric flow rates require constant fluid properties in all pipelines. Fluid properties in the first specification were used in this calculation.

LINEUP SUMMARIES

PIPELINE		FLOW gpm	PRESSURE SOURCE	SET psi g	LEVEL ft
Pipe 0	>>>	122.7	~N--0	0	0
Pipe 3.3	<<<	122.7	~N--3.3	0	0

Flows IN: 122.7 gpm
Flows OUT: 122.7 gpm

NET FLOWS: 0 gpm

LINEUP NODES 03/17/97 1:38 pm

NODE	ELEVATION ft	DEMAND gpm	PRESSURE psi g	H GRADE ft
~N--0	608		0 (source)	608
~N--1	608.443		-0.196	608.1
~N--2	609.838		3.65	616.9
~N--2.1	639.107		-10.82	618.3
~N--2.2	639.107		-10.81	618.3
~N--3	639.461		-5.045	629.7
~N--3.1	650.42		-4.609	641.5
~N--3.2	661.63		-4.084	653.8
~N--3.3	676.05		0 (source)	676

PIPELINE	FROM	TO	FLOW gpm	VEL ft/sec	dP psi g	HL ft
›e 0	~N--1	~N--0	122.7	* 1.969	(0.196)	0.065
Pipe 1	~N--2	~N--1	122.7	* 5.329	3.846	8.807
----- Rev. Flow IP ----- dP: 4.225 HL: 8.142						
Pipe 2	~N--2.1	~N--2	122.7	* 3.095	(14.47)	1.379
Pipe 2.1	~N--2.2	~N--2.1	122.7	* 3.095	0.013	0.025
Pipe 3	~N--3	~N--2.2	122.7	* 5.329	5.765	11.46
----- Rev.Flow BP ----- dP: 5.626 HL: 10.84						
Pipe 3.1	~N--3.1	~N--3	122.7	* 3.095	0.436	11.8
Pipe 3.2	~N--3.2	~N--3.1	122.7	* 3.095	0.525	12.22
Pipe 3.3	~N--3.3	~N--3.2	122.7	* 3.095	4.084	22.29

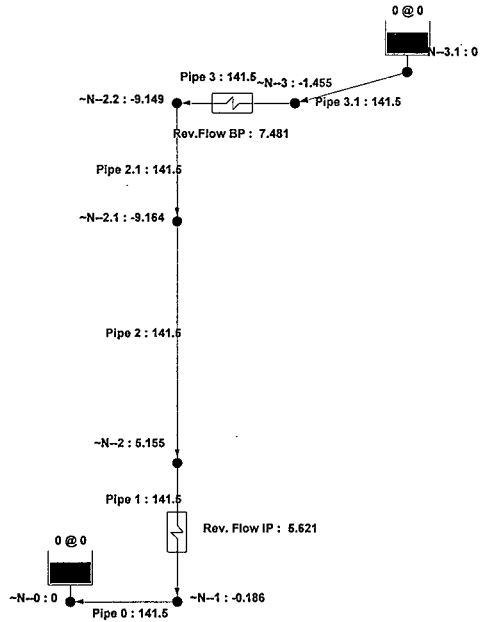

Company:	Fluor Daniel Northwest	03/17/97	1:47 pm
Project:	W-320 Anti-Siphon and Drainflow	**Linelist:**	DRAN30%2
by:	D. L. Stone DLS	**Lineup:**	DRAN30%2
Comments:	Slurry Line Drainflow - Lowpoint to Endpoint - Solids 30%	**flow rate:**	gpm
		pressure:	psig
Version:	PIPE-FLO ver 5.01	**level & grade:**	ft

Company: Fluor Daniel Northwest
Project: W-320 Anti-Siphon and Drainflow
by: D. L. Stone

03/17/97 1:45 pm
Lineup: DRAN30%2
rev: 03/17/97 1:44 pm

System: DRAN30%2
rev: 03/17/97 1:43 pm

Deviation: 0.00184 %
after: 7 iterations

Slurry Line - Drain from Stationpoint to Endpoint - 30% Solids (70F)

Volumetric flow rates require constant fluid properties in all pipelines. Fluid properties in the first specification were used in this calculation.

LINEUP SUMMARIES

PIPELINE		FLOW gpm	PRESSURE SOURCE	SET psi g	LEVEL ft
Pipe 0	>>>	141.5	~N--0	0	0
Pipe 3.1	<<<	141.5	~N--3.1	0	0

Flows IN: 141.5 gpm
Flows OUT: 141.5 gpm

NET FLOWS: 0 gpm

NODE	ELEVATION ft	DEMAND gpm	PRESSURE psi g	H GRADE ft
~N--0	608		0 (source)	608
~N--1	608.443		-0.186	608.1
~N--2	609.838		5.155	619.8
~N--2.1	639.107		-9.164	621.4
~N--2.2	639.107		-9.149	621.5
~N--3	639.461		-1.455	636.7
~N--3.1	650.42		0 (source)	650.4

PIPELINE	FROM	TO	FLOW gpm	VEL ft/sec	dP psi g	HL ft
Pipe 0	~N--1	~N--0	141.5	* 2.27	(0.186)	0.085
Pipe 1	~N--2	~N--1	141.5	6.144	5.34	11.69
----- Rev. Flow IP ----- dP: 5.621 HL: 10.83						
Pipe 2	~N--2.1	~N--2	141.5	* 3.568	(14.32)	1.677
Pipe 2.1	~N--2.2	~N--2.1	141.5	* 3.568	0.015	0.029
Pipe 3	~N--3	~N--2.2	141.5	6.144	7.694	15.18
----- Rev.Flow BP ----- dP: 7.481 HL: 14.42						
Pipe 3.1	~N--3.1	~N--3	141.5	* 3.568	1.455	13.76

Appendix I

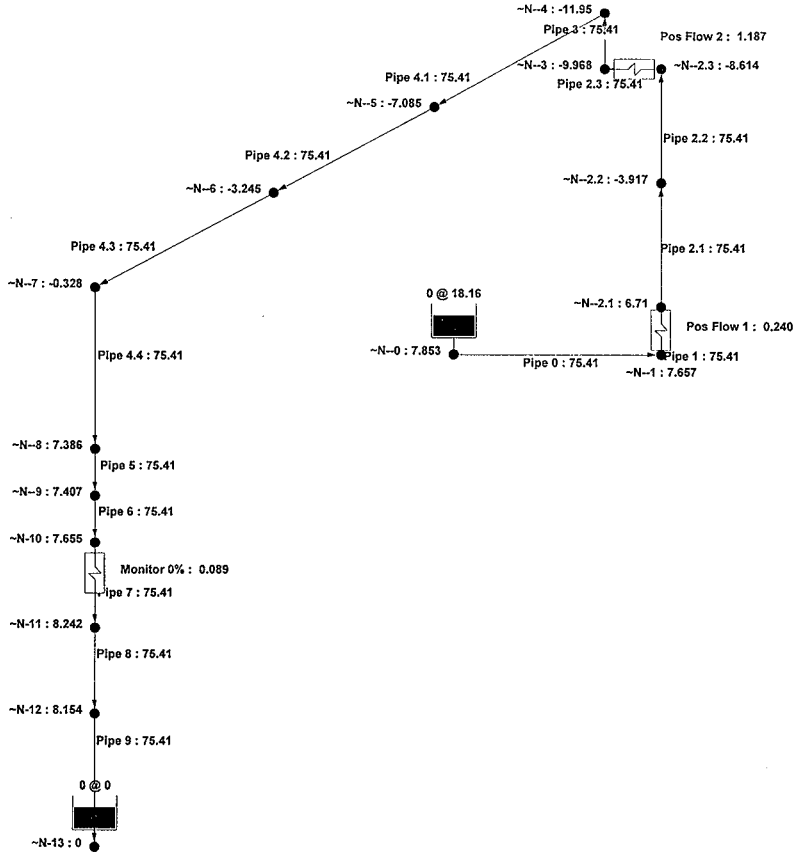

Company:	Fluor Daniel Northwest	03/17/97	3:06 pm
Project:	W-320 Anti-Siphon and Drainflow	**Linelist:**	SIPH0%1
by:	D. L. Stone DLS	**Lineup:**	SIPH0%1
Comments:	Supernate Line Siphoning - Solids 0%	**flow rate:**	gpm
		pressure:	psig
Version:	PIPE-FLO ver 5.01	**level & grade:**	ft

Company: Fluor Daniel Northwest
Project: W-320 Anti-Siphon and Drainflow
by: D. L. Stone

03/17/97 3:06 pm
Lineup: SIPH0%1
rev: 03/17/97 3:06 pm

System: SIPH0%1
rev: 03/17/97 2:34 pm

Deviation: 0.00207 %
after: 6 iterations

Supernate Line - 0% solids - Siphon Function

Volumetric flow rates require constant fluid properties in all pipelines. Fluid properties in the first specification were used in this calculation.

LINEUP SUMMARIES

PIPELINE		FLOW gpm	PRESSURE SOURCE	SET psi g	LEVEL ft
Pipe 0	<<<	75.41	~N--0	0	18.16
Pipe 9	>>>	75.41	~N-13	0	0

Flows IN: 75.41 gpm
Flows OUT: 75.41 gpm

NET FLOWS: 0 gpm

NODE	ELEVATION ft	DEMAND gpm	PRESSURE psi g	H GRADE ft
~N--0	635.5		7.853 (source)	653.7
~N--1	635.943		7.657	653.6
~N--2.1	637.338		6.71	652.9
~N--2.2	661.7		-3.917	652.6
~N--2.3	672.315		-8.614	652.4
~N--3	672.669		-9.968	649.6
~N--4	677.11		-11.95	649.5
~N--5	661.63		-7.085	645.2
~N--6	650.39		-3.245	642.9
~N--7	641.42		-0.328	640.7
~N--8	623.217		7.386	640.3
~N--9	622.517		7.407	639.6
~N-10	621.85		7.655	639.6
~N-11	620.225		8.242	639.3
~N-12	619.621		8.154	638.5
~N-13	619.35		0 (source)	619.3

PIPELINE	FROM	TO	FLOW gpm	VEL ft/sec	dP psi g	HL ft
Pipe 0	~N--0	~N--1	75.41	* 1.21	0.197	0.012
Pipe 1	~N--1	~N--2.1	75.41	* 3.275	0.947	0.794
----- Pos Flow 1 ----- dP: 0.240 HL: 0.554						
Pipe 2.1	~N--2.1	~N--2.2	75.41	* 1.902	10.63	0.212
Pipe 2.2	~N--2.2	~N--2.3	75.41	* 1.902	4.697	0.245
Pipe 2.3	~N--2.3	~N--3	75.41	* 3.275	1.354	2.776
----- Pos Flow 2 ----- dP: 1.187 HL: 2.745						
Pipe 3	~N--3	~N--4	75.41	* 1.902	1.983	0.144
Pipe 4.1	~N--4	~N--5	75.41	* 1.902	(4.865)	4.23
Pipe 4.2	~N--5	~N--6	75.41	* 1.902	(3.84)	2.36
Pipe 4.3	~N--6	~N--7	75.41	* 1.902	(2.917)	2.225
Pipe 4.4	~N--7	~N--8	75.41	* 1.902	(7.714)	0.365
Pipe 5	~N--8	~N--9	75.41	* 5.057	(0.021)	0.652
Pipe 6	~N--9	~N-10	75.41	7.216	(0.249)	0.092
Pipe 7	~N-10	~N-11	75.41	* 5.057	(0.587)	0.268
----- Monitor 0% ----- dP: 0.089 HL: 0.207						
Pipe 8	~N-11	~N-12	75.41	* 5.057	0.089	0.809
Pipe 9	~N-12	~N-13	75.41	* 33.66	8.154	19.13

Company: Fluor Daniel Northwest
Project: W-320 Anti-Siphon and Drainflow
by: D. L. Stone

03/17/97 3:06 pm
System: SIPH0%1
rev: 03/17/97 2:34 pm

SYSTEM REPORT

Created: 01/24/97 1:41 pm
Design file:
Pipe Specs: 2

Pipes: 15
Nodes: 16
Pumps/Comps: 3

Supernate Line - 0% Solids - Siphon Function (70F)

SYSTEM NODES

NODE	ELEVATION ft	PIPELINES IN	PIPELINES OUT
~N--0	635.5		Pipe 0
~N--1	635.943	Pipe 0	Pipe 1
~N--2.1	637.338	Pipe 1	Pipe 2.1
~N--2.2	661.7	Pipe 2.1	Pipe 2.2
~N--2.3	672.315	Pipe 2.2	Pipe 2.3
~N--3	672.669	Pipe 2.3	Pipe 3
~N--4	677.11	Pipe 3	Pipe 4.1
~N--5	661.63	Pipe 4.1	Pipe 4.2
~N--6	650.39	Pipe 4.2	Pipe 4.3
~N--7	641.42	Pipe 4.3	Pipe 4.4
~N--8	623.217	Pipe 4.4	Pipe 5
~N--9	622.517	Pipe 5	Pipe 6
~N-10	621.85	Pipe 6	Pipe 7
~N-11	620.225	Pipe 7	Pipe 8
~N-12	619.621	Pipe 8	Pipe 9
~N-13	619.35	Pipe 9	

SYSTEM PIPES 03/17/97 3:06 pm

PIPELINE	SPEC	FROM_NODE	TO_NODE	PUMP/COMP
Pipe 0	03	~N--0	~N--1	
Pipe 1	03	~N--1	~N--2.1	Pos Flow 1
Pipe 2.1	03	~N--2.1	~N--2.2	
Pipe 2.2	03	~N--2.2	~N--2.3	
Pipe 2.3	03	~N--2.3	~N--3	Pos Flow 2
Pipe 3	03	~N--3	~N--4	
Pipe 4.1	03	~N--4	~N--5	
Pipe 4.2	03	~N--5	~N--6	
Pipe 4.3	03	~N--6	~N--7	
Pipe 4.4	03	~N--7	~N--8	
Pipe 5	03	~N--8	~N--9	
Pipe 6	03	~N--9	~N-10	
Pipe 7	03	~N-10	~N-11	Monitor 0%
Pipe 8	03	~N-11	~N-12	
Pipe 9	04	~N-12	~N-13	

PUMP/COMP	PERFORMANCE DATA					
Monitor 0%	gpm:	0	50	150	250	350
	ft:	0	0.098	0.717	1.87	3.55
	eqn:	7.20527e-005 Q ^ 1.84168				
Pos Flow 1	gpm:	0	40	80	120	150
	ft:	0	0.156	0.624	1.4	2.2
	eqn:	9.72278e-005 Q ^ 2.00063				
Pos Flow 2	gpm:	0	40	80	120	150
	ft:	0	0.77	3.08	7	10.9
	eqn:	0.000468926 Q ^ 2.00674				

Company: Fluor Daniel Northwest
Project: W-320 Anti-Siphon and Drainflow
by: D. L. Stone

03/17/97 3:07 pm
System: SIPH0%1
rev: 03/17/97 2:34 pm

PIPELIST REPORT

Created: 01/24/97 1:41 pm
Design file:
Pipe Specs: 2

Pipes: 15
Nodes: 16
Pumps/Comps: 3

Supernate Line - 0% Solids - Siphon Function (70F)

SPECIFICATIONS

SPECIFICATION	PIPE MATERIAL Sch / Roughness	FLUID Temp / Pres	VALVE TABLE	DESIGN LIMITS Vel / Pres
03 0%-70F-sch40 rev: 01/31/97 12:53 pm	Steel Sch 40 0.0018 in Size for: 6 ft/sec	0% solids 70 °F 0 psi g	Standard	6 - 10 ft/sec -14.4 - 300 psi g
04 0%-70F-sch80 rev: 01/31/97 12:53 pm	Steel Sch 80 0.0018 in Size for: 6 ft/sec	0% solids 70 °F 0 psi g	Standard	6 - 10 ft/sec -14.4 - 300 psi g

PIPELINE	SPEC	MATERIAL Size / Sch	LENGTH ft	FLUID Temp / Pres	VALVES Total-K
Pipe 0	03	Steel 5 in / 40	0.442	0% solids 70 °F / 0 psi g	0.5
Pipe 1	03	Steel 3 in / 40	2.323	0% solids 70 °F / 0 psi g	1.194
Pipe 2.1	03	Steel 4 in / 40	26.049	0% solids 70 °F / 0 psi g	1.542
Pipe 2.2	03	Steel 4 in / 40	18.673	0% solids 70 °F / 0 psi g	2.771
Pipe 2.3	03	Steel 3 in / 40	0.667	0% solids 70 °F / 0 psi g	0.112
Pipe 3	03	Steel 4 in / 40	6.787	0% solids 70 °F / 0 psi g	1.989
Pipe 4.1	03	Steel 4 in / 40	822.8	0% solids 70 °F / 0 psi g	4.89
Pipe 4.2	03	Steel 4 in / 40	468.1	0% solids 70 °F / 0 psi g	1.956
Pipe 4.3	03	Steel 4 in / 40	428.7	0% solids 70 °F / 0 psi g	2.929
Pipe 4.4	03	Steel 4 in / 40	26.268	0% solids 70 °F / 0 psi g	4.247
Pipe 5	03	Steel 2.5 in / 40	1.231	0% solids 70 °F / 0 psi g	1.485
Pipe 6	03	Steel 2 in / 40	0.667	0% solids 70 °F / 0 psi g	0.01334
Pipe 7	03	Steel 2.5 in / 40	1.203	0% solids 70 °F / 0 psi g	0
Pipe 8	03	Steel 2.5 in / 40	0.604	0% solids 70 °F / 0 psi g	1.961
Pipe 9	04	Steel 1 in / 80	0.271	0% solids 70 °F / 0 psi g	1

Company: Fluor Daniel Northwest
Project: W-320 Anti-Siphon and Drainflow
by: D. L. Stone

03/17/97 3:07 pm
System: SIPH0%1
rev: 03/17/97 2:34 pm

MATERIALS REPORT

Created: 01/24/97 1:41 pm
Design file:
Pipe Specs: 2

Pipes: 15
Nodes: 16
Pumps/Comps: 3

Supernate Line - 0% Solids - Siphon Function (70F)

PIPE MATERIALS LIST

PIPELINE	SPEC	MATERIAL Size / Sch	LENGTH ft	VALVES & FITTINGS
Pipe 0	03	Steel 5 in / 40	0.442	1-Entrance Sharp-Edged
Pipe 1	03	Steel 3 in / 40	2.323	3-Elbow Short - r/d 1 @ 90° 1-Reducer Enlargement 4 X 3 1-Reducer Contraction 5 X 3
Pipe 2.1	03	Steel 4 in / 40	26.049	1-Elbow Short - r/d 1 @ 45° 4-Elbow Short - r/d 1 @ 90°
Pipe 2.2	03	Steel 4 in / 40	18.673	4-Elbow Long - r/d 1.5 @ 90° 1-Elbow Short - r/d 1 @ 90° 1-Mitre Bend @ 90° 1-Fixed K 0.5546
Pipe 2.3	03	Steel 3 in / 40	0.667	1-Reducer Contraction 4 X 3 1-Reducer Enlargement 4 X 3
Pipe 3	03	Steel 4 in / 40	6.787	1-Mitre Bend @ 90° 3-Elbow Long - r/d 1.5 @ 90° 1-Tee Flow Thru Run
Pipe 4.1	03	Steel 4 in / 40	822.8	10-Pipe Bend r/d 10 @ 90°
Pipe 4.2	03	Steel 4 in / 40	468.1	4-Pipe Bend r/d 10 @ 90°
Pipe 4.3	03	Steel 4 in / 40	428.7	5-Pipe Bend r/d 10 @ 90° 2-Pipe Bend r/d 8 @ 45°
Pipe 4.4	03	Steel 4 in / 40	26.268	5-Elbow Long - r/d 1.5 @ 90° 2-Elbow Short - r/d 1 @ 45° 2-Mitre Bend @ 90° 1-Reducer Contraction 4 X 2.5
Pipe 5	03	Steel 2.5 in / 40	1.231	1-Elbow Short - r/d 1 @ 90° 1-Mitre Bend @ 90° 1-Reducer Contraction 2.5 X 2

PIPE MATERIALS LIST 03/17/97 3:07 pm

PIPELINE	SPEC	MATERIAL Size / Sch	LENGTH ft	VALVES & FITTINGS
Pipe 6	03	Steel 2 in / 40	0.667	1-Reducer Enlargement 2.5 X 2
Pipe 7	03	Steel 2.5 in / 40	1.203	
Pipe 8	03	Steel 2.5 in / 40	0.604	1-Reducer Contraction 2.5 X 1
Pipe 9	04	Steel 1 in / 80	0.271	1-Exit Projecting

PIPE SUMMARY 03/17/97 3:07 pm

PIPE MATERIAL	SCHEDULE	SIZE	LENGTH
Steel	40	2 in	0.667 ft
		2.5 in	3.038 ft
		3 in	2.99 ft
		4 in	1797.38 ft
		5 in	0.442 ft
Steel	80	1 in	0.271 ft

VALVE & FITTING SUMMARY

SPECIFICATION	MATERIAL	SCHEDULE	VALVES & FITTINGS
03 0%-70F-sch40	Steel	40	
	Size: 2 in		1-Reducer Enlargement 2.5 X 2
	Size: 2.5 in		1-Elbow Short - r/d 1 @ 90°
			1-Mitre Bend @ 90°
			1-Reducer Contraction 2.5 X 2
			1-Reducer Contraction 2.5 X 1
	Size: 3 in		3-Elbow Short - r/d 1 @ 90°
			2-Reducer Enlargement 4 X 3
			1-Reducer Contraction 5 X 3
			1-Reducer Contraction 4 X 3
	Size: 4 in		3-Elbow Short - r/d 1 @ 45°
			5-Elbow Short - r/d 1 @ 90°
			12-Elbow Long - r/d 1.5 @ 90°
			4-Mitre Bend @ 90°
			1-Fixed K 0.5546
			1-Tee Flow Thru Run
			19-Pipe Bend r/d 10 @ 90°
			2-Pipe Bend r/d 8 @ 45°
			1-Reducer Contraction 4 X 2.5
	Size: 5 in		1-Entrance Sharp-Edged
04 0%-70F-sch80	Steel	80	
	Size: 1 in		1-Exit Projecting

Company: Fluor Daniel Northwest
Project: W-320 Anti-Siphon and Drainflow
by: D. L. Stone

03/17/97 3:22 pm
System: SIPH0%1
rev: 03/17/97 2:34 pm

PIPELINE REPORT

Pipe 2.2 rev: 03/17/97 2:23 pm

PIPING MATERIAL: Steel
Schedule: 40
abs roughness: 0.0018 in

PIPE SIZE: 4 in
dia: 4.026 in

LENGTH: 18.673 ft

ELEVATION in: 661.7 ft
out: 672.315 ft

SPECIFICATION: 0%-70F-sch40

SIZING Criteria: 6 ft/sec

LIMITS Velocity: 6 to 10 ft/sec
Pressure: -14.4 to 300 psi g

FLUID 0% solids at tmp: 70 °F
pres: 0 psi g
den: 62.31 lb/ft³
vsc: 3.96 cpois

PIPELINE RESISTANCE CURVE

Flow gpm	ffp	Vel ft/sec	dP psi
75.41	.0287	1.902	4.698
0	.0000	0	4.592
33.04	.0356	0.833	4.614
66.08	.0297	1.667	4.674
99.12	.0270	2.5	4.771
132.2	.0254	3.333	4.904
165.2	.0243	4.167	5.072
198.2	.0234	5	5.275
231.3	.0228	5.833	5.514
264.3	.0223	6.667	5.788
297.4	.0218	7.5	6.096
330.4	.0215	8.333	6.44
363.4	.0211	9.167	6.818
396.5	.0209	10	7.231

VALVES and FITTINGS

VALVE / FITTING		K-VALUE	VALVE / FITTING		K-VALUE
Elbow Long - r/d 1.5	90°	4@0.2282	Elbow Short - r/d 1	90°	0.326
Mitre Bend @ 90°		0.978	Fixed K		0.5546

FFT: 0.0163 TOTAL K: 2.771 Avg Percent of Total Loss: 67 %

Appendix J

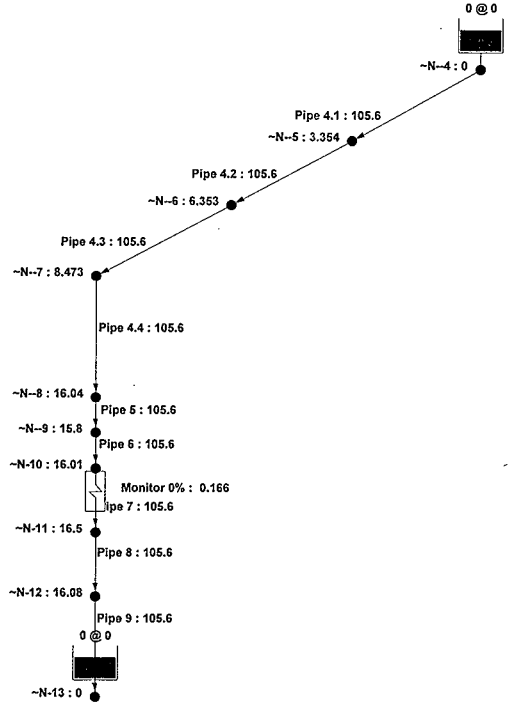

Company:	Fluor Daniel Northwest	03/17/97	3:15 pm
Project:	W-320 Anti-Siphon and Drainflow	**Linelist:**	DRAIN0%1
by:	D. L. Stone DLS	**Lineup:**	DRAIN0%1
Comments:	Supernate Line Drainflow - Highpoint to Endpoint - 0% Solids	**flow rate:**	gpm
		pressure:	psig
Version:	PIPE-FLO ver 5.01	**level & grade:**	ft

Company: Fluor Daniel Northwest
Project: W-320 Anti-Siphon and Drainflow
by: D. L. Stone

03/17/97 3:15 pm
Lineup: DRAIN0%1
rev: 03/17/97 3:14 pm

System: DRAIN0%1
rev: 03/17/97 3:13 pm

Deviation: 0.000792 %
after: 4 iterations

Supernate Line - 0% solids - Time required to drain - Configuration 1: Source at Highpoint

Volumetric flow rates require constant fluid properties in all pipelines. Fluid properties in the first specification were used in this calculation.

LINEUP SUMMARIES

PIPELINE		FLOW gpm	PRESSURE SOURCE	SET psi g	LEVEL ft
Pipe 4.1	<<<	105.6	~N--4	0	0
Pipe 9	>>>	105.6	~N-13	0	0

Flows IN: 105.6 gpm
Flows OUT: 105.6 gpm

NET FLOWS: 0 gpm

NODE	ELEVATION ft	DEMAND gpm	PRESSURE psi g	H GRADE ft
~N--4	677.11		0 (source)	677.1
~N--5	661.63		3.354	669.4
~N--6	650.39		6.353	665.1
~N--7	641.42		8.473	661
~N--8	623.217		16.04	660.3
~N--9	622.517		15.8	659
~N-10	621.85		16.01	658.9
~N-11	620.225		16.5	658.4
~N-12	619.621		16.08	656.8
~N-13	619.35		0 (source)	619.3

LINEUP PIPELINES 03/17/97 3:15 pm

PIPELINE	FROM	TO	FLOW gpm	VEL ft/sec	dP psi g	HL ft
›e 4.1	~N--4	~N--5	105.6	* 2.664	(3.354)	7.725
Pipe 4.2	~N--5	~N--6	105.6	* 2.664	(2.999)	4.304
Pipe 4.3	~N--6	~N--7	105.6	* 2.664	(2.12)	4.067
Pipe 4.4	~N--7	~N--8	105.6	* 2.664	(7.571)	0.697
Pipe 5	~N--8	~N--9	105.6	7.084	0.247	1.272
Pipe 6	~N--9	~N-10	105.6	* 10.11	(0.214)	0.172
Pipe 7	~N-10	~N-11	105.6	7.084	(0.488)	0.498
----- Monitor 0% ----- dP: 0.166 HL: 0.384						
Pipe 8	~N-11	~N-12	105.6	7.084	0.423	1.583
Pipe 9	~N-12	~N-13	105.6	* 47.15	16.08	37.44

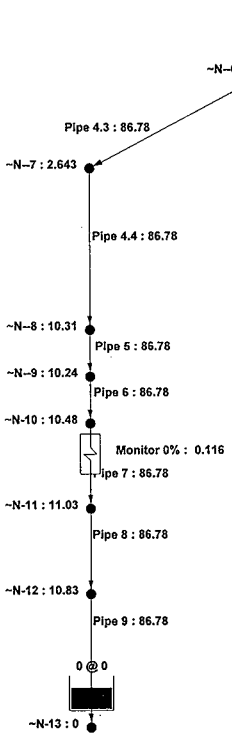

Company:	Fluor Daniel Northwest	03/17/97	3:21 pm
Project:	W-320 Anti-Siphon and Drainflow	**Linelist:**	DRAIN0%2
by:	D. L. Stone DLS	**Lineup:**	DRAN0%2
Comments:	Supernate Line Drainflow - Lowpoint to Endpoint - 0% Solids	**flow rate:**	gpm
		pressure:	psig
Version:	PIPE-FLO ver 5.01	**level & grade:**	ft

Company: Fluor Daniel Northwest
Project: W-320 Anti-Siphon and Drainflow
by: D. L. Stone

03/17/97 3:21 pm
Lineup: DRAN0%2
rev: 03/17/97 3:20 pm

System: DRAIN0%2
rev: 03/17/97 3:18 pm

Deviation: 0.00235 %
after: 4 iterations

Supernate Line Drainflow - 0% solids - Source at Stationpoint

Volumetric flow rates require constant fluid properties in all pipelines. Fluid properties in the first specification were used in this calculation.

LINEUP SUMMARIES

PIPELINE		FLOW gpm	PRESSURE SOURCE	SET psi g	LEVEL ft
Pipe 4.3	<<<	86.78	~N--6	0	0
Pipe 9	>>>	86.78	~N-13	0	0

Flows IN: 86.78 gpm
Flows OUT: 86.78 gpm

NET FLOWS: 0 gpm

NODE	ELEVATION ft	DEMAND gpm	PRESSURE psi g	H GRADE ft
~N--6	650.39		0 (source)	650.4
~N--7	641.42		2.643	647.5
~N--8	623.217		10.31	647.1
~N--9	622.517		10.24	646.2
~N-10	621.85		10.48	646.1
~N-11	620.225		11.03	645.7
~N-12	619.621		10.83	644.7
~N-13	619.35		0 (source)	619.3

PIPELINE	FROM	TO	FLOW gpm	VEL ft/sec	dP psi g	HL ft
e 4.3	~N--6	~N--7	86.78	* 2.189	(2.643)	2.859
Pipe 4.4	~N--7	~N--8	86.78	* 2.189	(7.666)	0.478
Pipe 5	~N--8	~N--9	86.78	* 5.82	0.070	0.861
Pipe 6	~N--9	~N-10	86.78	8.304	(0.237)	0.119
Pipe 7	~N-10	~N-11	86.78	* 5.82	(0.553)	0.347
----- Monitor 0% ----- dP: 0.116 HL: 0.268						
Pipe 8	~N-11	~N-12	86.78	* 5.82	0.202	1.07
Pipe 9	~N-12	~N-13	86.78	* 38.74	10.83	25.31

Appendix K

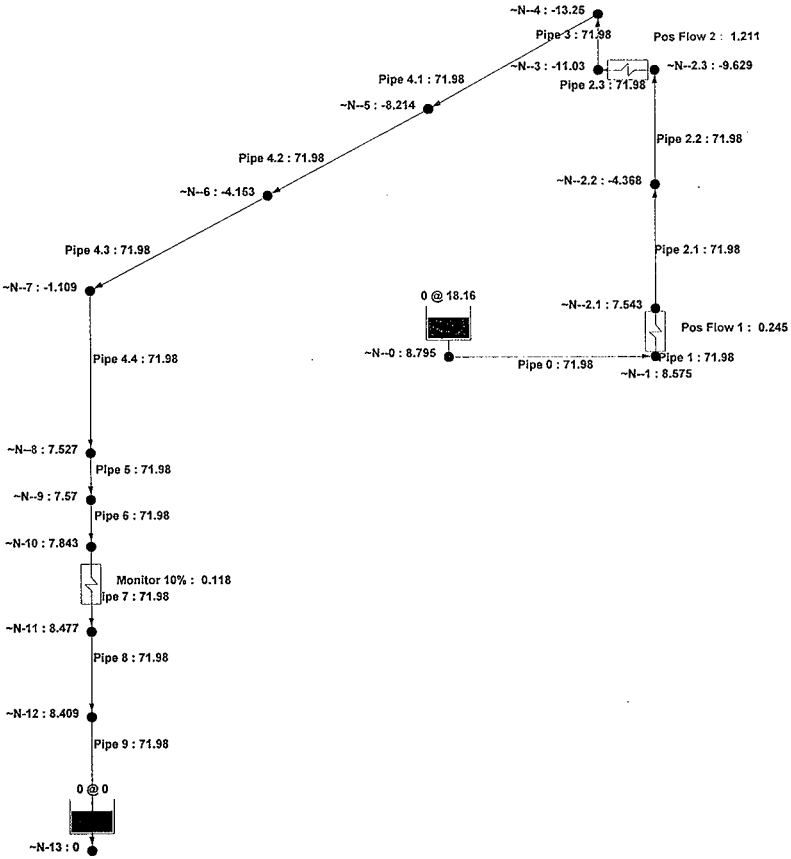

Company:	Fluor Daniel Northwest	03/17/97	2:53 pm
Project:	W-320 Anti-Siphon and Drainflow	**Linelist:**	SIPH10%1
by:	D. L. Stone DLS	**Lineup:**	SIPH10%
Comments:	Supernate Line Siphoning - Solids 10%	**flow rate:**	gpm
		pressure:	psig
Version:	PIPE-FLO ver 5.01	**level & grade:**	ft

Company: Fluor Daniel Northwest
Project: W-320 Anti-Siphon and Drainflow
by: D. L. Stone

03/17/97 3:03 pm
Lineup: SIPH10%
rev: 03/17/97 2:53 pm

System: SIPH10%1
rev: 03/17/97 2:52 pm

Deviation: 0.007 %
after: 6 iterations

Supernate Line - 10% solids - Siphon Function

Volumetric flow rates require constant fluid properties in all pipelines. Fluid properties in the first specification were used in this calculation.

LINEUP SUMMARIES

PIPELINE		FLOW gpm	PRESSURE SOURCE	SET psi g	LEVEL ft
Pipe 0	<<<	71.98	~N--0	0	18.16
Pipe 9	>>>	71.98	~N-13	0	0

Flows IN: 71.98 gpm
Flows OUT: 71.98 gpm

NET FLOWS: 0 gpm

NODE	ELEVATION ft	DEMAND gpm	PRESSURE psi g	H GRADE ft
~N--0	635.5		8.795 (source)	653.7
~N--1	635.943		8.575	653.6
~N--2.1	637.338		7.543	652.9
~N--2.2	661.7		-4.368	652.7
~N--2.3	672.315		-9.629	652.4
~N--3	672.669		-11.03	649.9
~N--4	677.11		-13.25	649.8
~N--5	661.63		-8.214	644.7
~N--6	650.39		-4.153	641.8
~N--7	641.42		-1.109	639.1
~N--8	623.217		7.527	638.8
~N--9	622.517		7.57	638.1
~N-10	621.85		7.843	638
~N-11	620.225		8.477	637.7
~N-12	619.621		8.409	637
~N-13	619.35		0 (source)	619.3

LINEUP PIPELINES 03/17/97 3:03 pm

PIPELINE	FROM	TO	FLOW gpm	VEL ft/sec	dP psi g	HL ft
Pipe 0	~N--0	~N--1	71.98	* 1.155	0.220	0.011
Pipe 1	~N--1	~N--2.1	71.98	* 3.126	1.032	0.736
----- Pos Flow 1 ----- dP: 0.245 HL: 0.505						
Pipe 2.1	~N--2.1	~N--2.2	71.98	* 1.816	11.91	0.232
Pipe 2.2	~N--2.2	~N--2.3	71.98	* 1.816	5.261	0.249
Pipe 2.3	~N--2.3	~N--3	71.98	* 3.126	1.398	2.532
----- Pos Flow 2 ----- dP: 1.211 HL: 2.501						
Pipe 3	~N--3	~N--4	71.98	* 1.816	2.219	0.142
Pipe 4.1	~N--4	~N--5	71.98	* 1.816	(5.032)	5.09
Pipe 4.2	~N--5	~N--6	71.98	* 1.816	(4.062)	2.853
Pipe 4.3	~N--6	~N--7	71.98	* 1.816	(3.043)	2.687
Pipe 4.4	~N--7	~N--8	71.98	* 1.816	(8.636)	0.372
Pipe 5	~N--8	~N--9	71.98	* 4.827	(0.043)	0.611
Pipe 6	~N--9	~N-10	71.98	6.888	(0.273)	0.103
Pipe 7	~N-10	~N-11	71.98	* 4.827	(0.634)	0.316
----- Monitor 10% ----- dP: 0.118 HL: 0.244						
Pipe 8	~N-11	~N-12	71.98	* 4.827	0.068	0.745
Pipe 9	~N-12	~N-13	71.98	* 32.13	8.409	17.63

Company: Fluor Daniel Northwest
Project: W-320 Anti-Siphon and Drainflow
by: D. L. Stone

03/17/97 3:04 pm
System: SIPH10%1
rev: 03/17/97 2:52 pm

SYSTEM REPORT

Created: 01/24/97 1:41 pm
Design file:
Pipe Specs: 2

Pipes: 15
Nodes: 16
Pumps/Comps: 3

Supernate Line - 10% Solids - Siphon Function (70F)

SYSTEM NODES

NODE	ELEVATION ft	PIPELINES IN	PIPELINES OUT
~N--0	635.5		Pipe 0
~N--1	635.943	Pipe 0	Pipe 1
~N--2.1	637.338	Pipe 1	Pipe 2.1
~N--2.2	661.7	Pipe 2.1	Pipe 2.2
~N--2.3	672.315	Pipe 2.2	Pipe 2.3
~N--3	672.669	Pipe 2.3	Pipe 3
~N--4	677.11	Pipe 3	Pipe 4.1
~N--5	661.63	Pipe 4.1	Pipe 4.2
~N--6	650.39	Pipe 4.2	Pipe 4.3
~N--7	641.42	Pipe 4.3	Pipe 4.4
~N--8	623.217	Pipe 4.4	Pipe 5
~N--9	622.517	Pipe 5	Pipe 6
~N-10	621.85	Pipe 6	Pipe 7
~N-11	620.225	Pipe 7	Pipe 8
~N-12	619.621	Pipe 8	Pipe 9
~N-13	619.35	Pipe 9	

PIPELINE	SPEC	FROM_NODE	TO_NODE	PUMP/COMP
Pipe 0	05	~N--0	~N--1	
Pipe 1	05	~N--1	~N--2.1	Pos Flow 1
Pipe 2.1	05	~N--2.1	~N--2.2	
Pipe 2.2	05	~N--2.2	~N--2.3	
Pipe 2.3	05	~N--2.3	~N--3	Pos Flow 2
Pipe 3	05	~N--3	~N--4	
Pipe 4.1	05	~N--4	~N--5	
Pipe 4.2	05	~N--5	~N--6	
Pipe 4.3	05	~N--6	~N--7	
Pipe 4.4	05	~N--7	~N--8	
Pipe 5	05	~N--8	~N--9	
Pipe 6	05	~N--9	~N-10	
Pipe 7	05	~N-10	~N-11	Monitor 10%
Pipe 8	05	~N-11	~N-12	
Pipe 9	02	~N-12	~N-13	

PUMP/COMP	PERFORMANCE DATA					
Monitor 10%	gpm:	0	50	150	250	350
	ft:	0	0.13	0.87	2.18	4.04
	eqn:	0.000130185 Q ^ 1.7625				
Pos Flow 1	gpm:	0	40	80	120	150
	ft:	0	0.156	0.624	1.4	2.2
	eqn:	9.72278e-005 Q ^ 2.00063				
Pos Flow 2	gpm:	0	40	80	120	150
	ft:	0	0.77	3.08	7	10.9
	eqn:	0.000468926 Q ^ 2.00674				

Company: Fluor Daniel Northwest
Project: W-320 Anti-Siphon and Drainflow
by: D. L. Stone

03/17/97 3:04 pm
System: SIPH10%1
rev: 03/17/97 2:52 pm

PIPELIST REPORT

Created: 01/24/97 1:41 pm
Design file:
Pipe Specs: 2

Pipes: 15
Nodes: 16
Pumps/Comps: 3

Supernate Line - 10% Solids - Siphon Function (70F)

SPECIFICATIONS

SPECIFICATION	PIPE MATERIAL Sch / Roughness	FLUID Temp / Pres	VALVE TABLE	DESIGN LIMITS Vel / Pres
05 10%-sch40 rev: 02/25/97 7:03 am	Steel Sch 40 0.0018 in Size for: 6 ft/sec	10% solids 70 °F 0 psi g	Standard	6 - 10 ft/sec -14.4 - 300 psi g
02 10%-sch80 rev: 02/25/97 7:03 am	Steel Sch 80 0.0018 in Size for: 6 ft/sec	10% solids 70 °F 0 psi g	Standard	6 - 10 ft/sec -14.4 - 300 psi g

PIPELINE	SPEC	MATERIAL Size / Sch	LENGTH ft	FLUID Temp / Pres	VALVES Total-K
Pipe 0	05	Steel 5 in / 40	0.442	10% solids 70 °F / 0 psi g	0.5
Pipe 1	05	Steel 3 in / 40	2.323	10% solids 70 °F / 0 psi g	1.194
Pipe 2.1	05	Steel 4 in / 40	26.049	10% solids 70 °F / 0 psi g	1.542
Pipe 2.2	05	Steel 4 in / 40	18.673	10% solids 70 °F / 0 psi g	2.712
Pipe 2.3	05	Steel 3 in / 40	0.667	10% solids 70 °F / 0 psi g	0.112
Pipe 3	05	Steel 4 in / 40	6.787	10% solids 70 °F / 0 psi g	1.989
Pipe 4.1	05	Steel 4 in / 40	822.8	10% solids 70 °F / 0 psi g	4.89
Pipe 4.2	05	Steel 4 in / 40	468.1	10% solids 70 °F / 0 psi g	1.956
Pipe 4.3	05	Steel 4 in / 40	428.7	10% solids 70 °F / 0 psi g	3.227
Pipe 4.4	05	Steel 4 in / 40	26.268	10% solids 70 °F / 0 psi g	4.247
Pipe 5	05	Steel 2.5 in / 40	1.231	10% solids 70 °F / 0 psi g	1.485
Pipe 6	05	Steel 2 in / 40	0.667	10% solids 70 °F / 0 psi g	0.01334
Pipe 7	05	Steel 2.5 in / 40	1.203	10% solids 70 °F / 0 psi g	0
Pipe 8	05	Steel 2.5 in / 40	0.604	10% solids 70 °F / 0 psi g	1.961
Pipe 9	02	Steel 1 in / 80	0.271	10% solids 70 °F / 0 psi g	1

Company: Fluor Daniel Northwest
Project: W-320 Anti-Siphon and Drainflow
by: D. L. Stone

03/17/97 3:04 pm
System: SIPH10%1
rev: 03/17/97 2:52 pm

MATERIALS REPORT

Created: 01/24/97 1:41 pm
Design file:
Pipe Specs: 2

Pipes: 15
Nodes: 16
Pumps/Comps: 3

Supernate Line - 10% Solids - Siphon Function (70F)

PIPE MATERIALS LIST

PIPELINE	SPEC	MATERIAL Size / Sch	LENGTH ft	VALVES & FITTINGS
Pipe 0	05	Steel 5 in / 40	0.442	1-Entrance Sharp-Edged
Pipe 1	05	Steel 3 in / 40	2.323	3-Elbow Short - r/d 1 @ 90° 1-Reducer Enlargement 4 X 3 1-Reducer Contraction 5 X 3
Pipe 2.1	05	Steel 4 in / 40	26.049	1-Elbow Short - r/d 1 @ 45° 4-Elbow Short - r/d 1 @ 90°
Pipe 2.2	05	Steel 4 in / 40	18.673	4-Elbow Long - r/d 1.5 @ 90° 1-Elbow Short - r/d 1 @ 90° 1-Mitre Bend @ 90° 1-Fixed K 0.4952
Pipe 2.3	05	Steel 3 in / 40	0.667	1-Reducer Contraction 4 X 3 1-Reducer Enlargement 4 X 3
Pipe 3	05	Steel 4 in / 40	6.787	1-Mitre Bend @ 90° 3-Elbow Long - r/d 1.5 @ 90° 1-Tee Flow Thru Run
Pipe 4.1	05	Steel 4 in / 40	822.8	10-Pipe Bend r/d 10 @ 90°
Pipe 4.2	05	Steel 4 in / 40	468.1	4-Pipe Bend r/d 10 @ 90°
Pipe 4.3	05	Steel 4 in / 40	428.7	5-Pipe Bend r/d 10 @ 90° 2-Pipe Bend r/d 8 @ 90°
Pipe 4.4	05	Steel 4 in / 40	26.268	5-Elbow Long - r/d 1.5 @ 90° 2-Elbow Short - r/d 1 @ 45° 2-Mitre Bend @ 90° 1-Reducer Contraction 4 X 2.5
Pipe 5	05	Steel 2.5 in / 40	1.231	1-Elbow Short - r/d 1 @ 90° 1-Mitre Bend @ 90° 1-Reducer Contraction 2.5 X 2

PIPE MATERIALS LIST 03/17/97 3:04 pm

PIPELINE	SPEC	MATERIAL Size / Sch	LENGTH ft	VALVES & FITTINGS
Pipe 6	05	Steel 2 in / 40	0.667	1-Reducer Enlargement 2.5 X 2
Pipe 7	05	Steel 2.5 in / 40	1.203	
Pipe 8	05	Steel 2.5 in / 40	0.604	1-Reducer Contraction 2.5 X 1
Pipe 9	02	Steel 1 in / 80	0.271	1-Exit Projecting

PIPE SUMMARY 03/17/97 3:04 pm

PIPE MATERIAL	SCHEDULE	SIZE	LENGTH
Steel	40	2 in	0.667 ft
		2.5 in	3.038 ft
		3 in	2.99 ft
		4 in	1797.38 ft
		5 in	0.442 ft
Steel	80	1 in	0.271 ft

VALVE & FITTING SUMMARY

SPECIFICATION	MATERIAL	SCHEDULE	VALVES & FITTINGS
05 10%-sch40	Steel	40	
	Size: 2 in		1-Reducer Enlargement 2.5 X 2
	Size: 2.5 in		1-Elbow Short - r/d 1 @ 90°
			1-Mitre Bend @ 90°
			1-Reducer Contraction 2.5 X 2
			1-Reducer Contraction 2.5 X 1
	Size: 3 in		3-Elbow Short - r/d 1 @ 90°
			2-Reducer Enlargement 4 X 3
			1-Reducer Contraction 5 X 3
			1-Reducer Contraction 4 X 3
	Size: 4 in		3-Elbow Short - r/d 1 @ 45°
			5-Elbow Short - r/d 1 @ 90°
			12-Elbow Long - r/d 1.5 @ 90°
			4-Mitre Bend @ 90°
			1-Fixed K 0.4952
			1-Tee Flow Thru Run
			19-Pipe Bend r/d 10 @ 90°
			2-Pipe Bend r/d 8 @ 90°
			1-Reducer Contraction 4 X 2.5
	Size: 5 in		1-Entrance Sharp-Edged
02 10%-sch80	Steel	80	
	Size: 1 in		1-Exit Projecting

Company: Fluor Daniel Northwest
Project: W-320 Anti-Siphon and Drainflow
by: D. L. Stone

03/17/97 3:23 pm
System: SIPH10%1
rev: 03/17/97 2:52 pm

PIPELINE REPORT

Pipe 2.2 rev: 03/17/97 2:46 pm

PIPING MATERIAL: Steel
Schedule: 40
abs roughness: 0.0018 in

PIPE SIZE: 4 in
dia: 4.026 in

LENGTH: 18.673 ft

ELEVATION in: 661.7 ft
out: 672.315 ft

SPECIFICATION: 10%-sch40

SIZING Criteria: 6 ft/sec

LIMITS Velocity: 6 to 10 ft/sec
Pressure: -14.4 to 300 psi g

FLUID 10% solids at tmp: 70 °F
pres: 0 psi g
den: 69.78 lb/ft³
vsc: 12.87 cpois

PIPELINE RESISTANCE CURVE

Flow gpm	ffp	Vel ft/sec	dP psi
71.98	.0386	1.816	5.263
0	.0000	0	5.142
33.04	.0494	0.833	5.171
66.08	.0396	1.667	5.245
99.12	.0352	2.5	5.362
132.2	.0326	3.333	5.52
165.2	.0308	4.167	5.72
198.2	.0294	5	5.959
231.3	.0284	5.833	6.239
264.3	.0275	6.667	6.559
297.4	.0268	7.5	6.919
330.4	.0262	8.333	7.318
363.4	.0257	9.167	7.756
396.5	.0252	10	8.234

VALVES and FITTINGS

VALVE / FITTING		K-VALUE	VALVE / FITTING		K-VALUE
Elbow Long - r/d 1.5	90°	4@0.2282	Elbow Short - r/d 1	90°	0.326
Mitre Bend @ 90°		0.978	Fixed K		0.4952

FFT: 0.0163 TOTAL K: 2.712 Avg Percent of Total Loss: 61 %

Appendix L

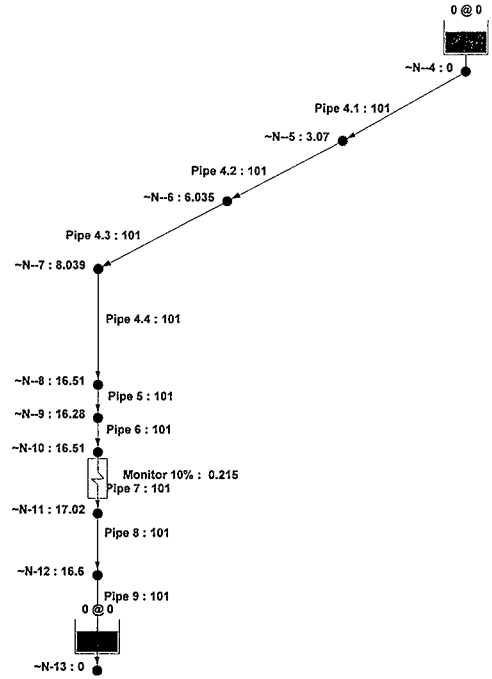

Company:	Fluor Daniel Northwest	03/17/97	3:30 pm
Project:	W-320 Anti-Siphon and Drainflow	**Linelist:**	DRAN10%1
by:	D. L. Stone DLS	**Lineup:**	DRAIN0%1
Comments:	Supernate Line Drainflow - Highpoint to Endpoint - 10% Solids	**flow rate:**	gpm
		pressure:	psig
Version:	PIPE-FLO ver 5.01	**level & grade:**	ft

Company: Fluor Daniel Northwest
Project: W-320 Anti-Siphon and Drainflow
by: D. L. Stone

03/17/97 3:30 pm
Lineup: DRAIN0%1
rev: 03/17/97 3:30 pm

System: DRAN10%1
rev: 03/17/97 3:28 pm

Deviation: 0.00272 %
after: 3 iterations

Supernate Line - 0% solids - Time required to drain - Configuration 1: Source at Highpoint

Volumetric flow rates require constant fluid properties in all pipelines. Fluid properties in the first specification were used in this calculation.

LINEUP SUMMARIES

PIPELINE		FLOW gpm	PRESSURE SOURCE	SET psi g	LEVEL ft
Pipe 4.1	<<<	101	~N--4	0	0
Pipe 9	>>>	101	~N-13	0	0

Flows IN: 101 gpm
Flows OUT: 101 gpm

NET FLOWS: 0 gpm

NODE	ELEVATION ft	DEMAND gpm	PRESSURE psi g	H GRADE ft
~N--4	677.11		0 (source)	677.1
~N--5	661.63		3.07	668
~N--6	650.39		6.035	662.9
~N--7	641.42		8.039	658
~N--8	623.217		16.51	657.3
~N--9	622.517		16.28	656.1
~N-10	621.85		16.51	655.9
~N-11	620.225		17.02	655.4
~N-12	619.621		16.6	653.9
~N-13	619.35		0 (source)	619.3

PIPELINE	FROM	TO	FLOW gpm	VEL ft/sec	dP psi g	HL ft
Pipe 4.1	~N--4	~N--5	101	* 2.547	(3.07)	9.142
Pipe 4.2	~N--5	~N--6	101	* 2.547	(2.965)	5.118
Pipe 4.3	~N--6	~N--7	101	* 2.547	(2.004)	4.832
Pipe 4.4	~N--7	~N--8	101	* 2.547	(8.475)	0.704
Pipe 5	~N--8	~N--9	101	6.773	0.237	1.19
Pipe 6	~N--9	~N-10	101	9.663	(0.231)	0.189
Pipe 7	~N-10	~N-11	101	6.773	(0.509)	0.574
----- Monitor 10% ----- dP: 0.215 HL: 0.444						
Pipe 8	~N-11	~N-12	101	6.773	0.415	1.461
Pipe 9	~N-12	~N-13	101	* 45.08	16.6	34.55

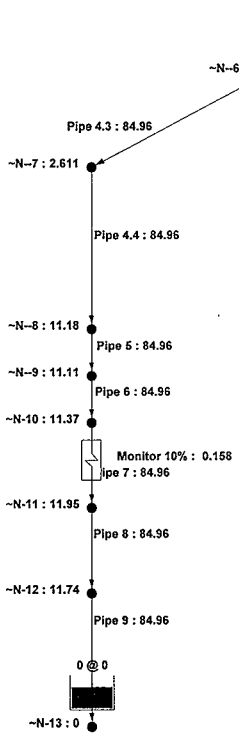

Company:	Fluor Daniel Northwest	03/17/97	3:33 pm
Project:	W-320 Anti-Siphon and Drainflow	**Linelist:**	DRAN10%2
by:	D. L. Stone DLS	**Lineup:**	DRAN10%2
Comments:	Supernate Line Drainflow - Lowpoint to Endpoint - 10% Solids	**flow rate:**	gpm
		pressure:	psig
Version:	PIPE-FLO ver 5.01	**level & grade:**	ft

Company: Fluor Daniel Northwest
Project: W-320 Anti-Siphon and Drainflow
by: D. L. Stone

03/17/97 3:33 pm
Lineup: DRAN10%2
rev: 03/17/97 3:33 pm

System: DRAN10%2
rev: 03/17/97 3:32 pm

Deviation: 0.0033 %
after: 4 iterations

Supernate Line Drainflow - 10% solids - Source at Stationpoint

Volumetric flow rates require constant fluid properties in all pipelines. Fluid properties in the first specification were used in this calculation.

LINEUP SUMMARIES

PIPELINE		FLOW gpm	PRESSURE SOURCE	SET psi g	LEVEL ft
Pipe 4.3	<<<	84.96	~N--6	0	0
Pipe 9	>>>	84.96	~N-13	0	0

Flows IN: 84.96 gpm
Flows OUT: 84.96 gpm

NET FLOWS: 0 gpm

NODE	ELEVATION ft	DEMAND gpm	PRESSURE psi g	H GRADE ft
~N--6	650.39		0 (source)	650.4
~N--7	641.42		2.611	646.8
~N--8	623.217		11.18	646.3
~N--9	622.517		11.11	645.5
~N-10	621.85		11.37	645.3
~N-11	620.225		11.95	644.9
~N-12	619.621		11.74	643.9
~N-13	619.35		0 (source)	619.3

PIPELINE	FROM	TO	FLOW gpm	VEL ft/sec	dP psi g	HL ft
ıe 4.3	~N--6	~N--7	84.96	* 2.143	(2.611)	3.578
Pipe 4.4	~N--7	~N--8	84.96	* 2.143	(8.57)	0.508
Pipe 5	~N--8	~N--9	84.96	* 5.698	0.071	0.846
Pipe 6	~N--9	~N-10	84.96	8.13	(0.256)	0.139
Pipe 7	~N-10	~N-11	84.96	* 5.698	(0.582)	0.423
----- Monitor 10% ----- dP: 0.158 HL: 0.327						
Pipe 8	~N-11	~N-12	84.96	* 5.698	0.209	1.036
Pipe 9	~N-12	~N-13	84.96	* 37.93	11.74	24.51

Appendix M

APPENDIX B
Calc.# W320-27-019
Page 16 of

E-21-15

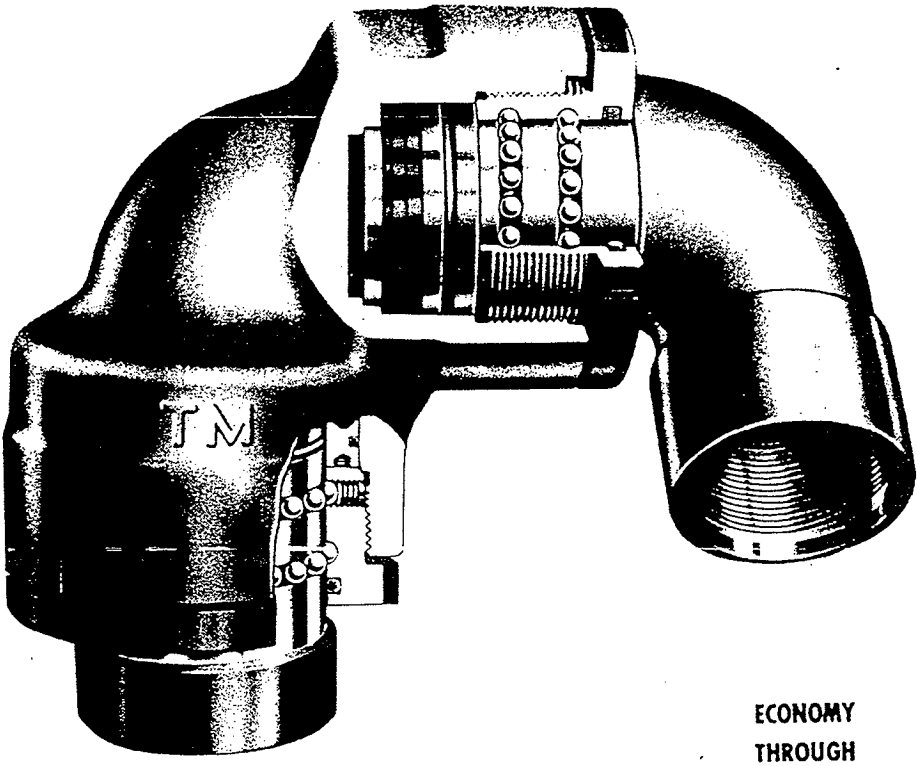

ECONOMY
THROUGH
QUALITY

T-M SWIVEL JOINTS

T-M MFG. CO. 695 E. ARQUES AVE., SUNNYVALE, CALIF. 94086-3832

A

E-21-15

THREADED AND BORED FOR WELDING

STYLE 100

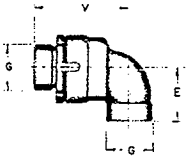

STYLE 200

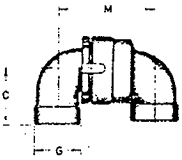

STYLE 300

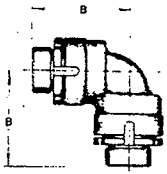

STYLE 400

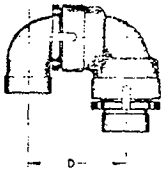

STYLE 500

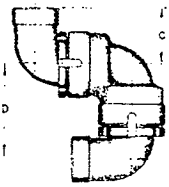

STYLE 600

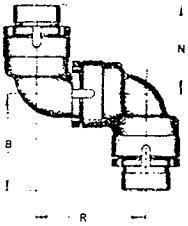

STYLE 700

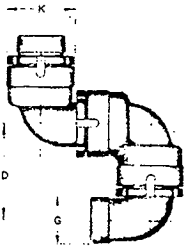

STYLE 800

DIMENSIONS												
SIZES	B	C	D	E	G	K	M	N	P	R	V	SIZE
⅜ & ½	3½	2	3⅜	1⅞	1¼	2	3	3⅛	3⅞	3⅝	3⅞	⅜ & ½
¾ & 1	4¼	2⅜	4¼	2¼	1¾	2⅞	4⅛	4⅛	4⅜	5	4⅛	¾ & 1
1¼	4¾	2¾	4¾	2¾	2⅛	3⅛	4⅝	4⅝	5⅛	5 3/16	5¼	1¼
1½	5½	3	6	3¼	2½	3½	6	5¼	5¾	5 15/16	5⅛	1½
2	6⅜	3½	6⅝	4¼	3⅛	4⅝	6⅝	6	6⅜	7⅜	6¼	2
2½	6⅞	4	7⅜	4	3¾	5¼	6⅞	6⅜	6⅞	8¼	6⅜	2½
3	7¾	4⅞	9⅛	4¼	4¼	5⅞	8⅛	7¼	7 5/16	10⅛	7	3
4	9¼	5½	10⅛	5½	5½	7¼	10⅛	9¼	8¾	11½	8⅝	4

All dimensions given in inches ±⅛"

For sizes larger than 4" refer to section on fabricated joints.

LAWRENCE PUMPS INC.

371 Market Street, Lawrence, MA 01843-1595 • Telephone 508-682-5248 • Fax 508-975-4291

ISO 9001

INSTALLATION, OPERATION, AND MAINTENANCE MANUAL

TITLE

CUSTOMER: WESTINGHOUSE HANFORD COMPANY

USER: WESTINGHOUSE HANFORD COMPANY

SERVICE: TRANSFER AND SLUICE PUMPS

LOCATION: RICHLAND, WA

PURCHASE ORDER NO: WHC P.O. W-78259-Z4

PUMP SERIAL NO: 91231-1, 91231-2, 91232-1 & 91232-2

PUMP ITEM NO: P-1361, P-0621, P-1361 & P-0621

D1 55687

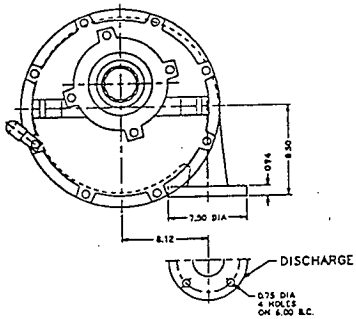

CONNECTIONS:

[M] MAIN MOTOR POWER LEADS (60 FOOT LENGTH)

WEIGHTS:

PUMP	500	LBS.
MOTOR	1800	LBS.
TOTAL	2300	LBS. (APPROXIMATE)

NOTES:

1. FOR LIST OF PARTS SEE PUMP PARTS LIST PL55687.
2. TACK WELD PART NOS 37 AND 82 AT ASSEMBLY.
3. 0.12 FILLET WELD PART NO. 90 TO PART NO. 51 AT ASSEMBLY.
4. ALL WELDS TO BE GROUND TO 125 RMS MINIMUM.
5. PUMP NAMEPLATE SHALL BE MADE OF STAINLESS STEEL 0.01 STD NAMEPLATE) AND IS TO BE WIRED TO THE PUMP. THE PUMP SHALL ALSO BE STAMPED USING LOW IMPACT STAMPS.
6. LEG SUPPORT (43) TO BE FIT AT ASSEMBLY. HOLES IN SUCTION SCREEN FOR LEG SUPPORTS TO BE FIT AT ASSEMBLY. WELD WASHER (44) TO LEG SUPPORT AND ALSO TO SUCTION SCREEN AT ASSEMBLY. LEG SUPPORTS TO BE LOCATED APPROX. 60° AWAY FROM SUCTION SCREEN SUPPORT RIBS. LEG SUPPORTS ARE TO EXTEND BEYOND THE LOWEST POINT ON THE SUCTION SCREEN BY A MIN. OF 0.031 TO A MAX. OF 0.125.

PUMP TAG NO:	P-1361
PUMP SERIAL NO:	91231-1
PUMP CAPACITY:	318-350 USGPM
PUMP TDH:	120-123 FT
PUMP SPEED:	1760 RPM
POWER:	31-34 HP

PUMP TAG NO:	P-0621
PUMP SERIAL NO:	91231-2
PUMP CAPACITY:	350 USGPM
PUMP TDH:	128 FT
PUMP SPEED:	1760 RPM
POWER:	25 HP

NOZZLE LOADS:

PUMP NOZZLE LOADS	
TARGET LOADS	DISCHARGE FLANGE
FX	320 LBS
FY	400 LBS
FZ	210 LBS
FR	570 LBS
MX	980 FT-LBS
MY	740 FT-LBS
MZ	500 FT-LBS
MR	1330 FT-LBS

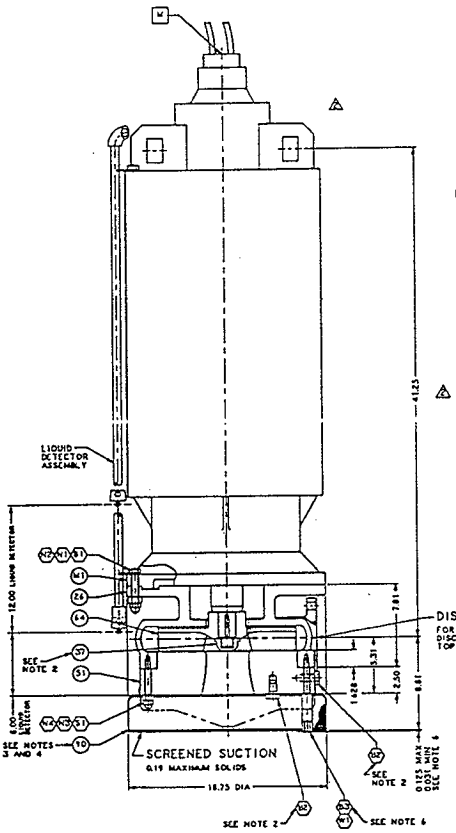

HNF-2477, Rev. 0
Page B-156

NO	BY	DATE	CHKD	DESCRIPTION
2	MTC	7/9 91		ADDED MOTOR LIFTING BRACKETS AND DISCHARGE TO MOTOR LEAD INCL. LOCA PUMP TAG NO. P-1361 WAS 270 USGPM 140-170 FT/TDH BRACKETS BATTING ADDED PUMP TAG NO. P-0621 WAS 270 USGPM 118 FT/TDH SPEC POWER RATING ADDED NAME PLATE MOTOR DATA REMOVED NOTE 5 & WEIGHTS REVISED MOTOR CLEAR OF GRAVITY REMOVED NOTE 6, SUPPORT LEGS & LIQUID DETECTOR ASST ADDED PUMP DISCHARGE ROTATED 90 CW
1	DRS	5/7 91	AIG	

REVISIONS

ASSEMBLY / ELEVATION OF 4x3x13 VERTICAL SUBMERSIBLE PUMP

91231-2	M24-2VV-78259	P-0621
91231-1		P-1361
PUMP SERIAL NO	ORDER NO.	PUMP ITEM NO.

CUSTOMER: WESTINGHOUSE HANFORD CO.
SITE: RICHLAND, WASHINGTON

DIMENSIONS ARE IN INCHES UNLESS OTHERWISE SPECIFIED
DO NOT USE FOR CONSTRUCTION UNLESS VALUES CERTIFIED

DRAWN JDJ CHKD DATE
SHTR 10/30/95 TRP JJDST
SCALE 3"=1'-0"
CAD DATABASE
DWG FILE NO. 55687 REV. 07/13/97

LAWRENCE PUMPS INC.
LAWRENCE, KANSAS

DRAWING NUMBER D 55687 SHEET 1 OF 1

LEGEND
- PUMP PART
- FASTENER
- CONNECTION

Two-Way Ball Valves

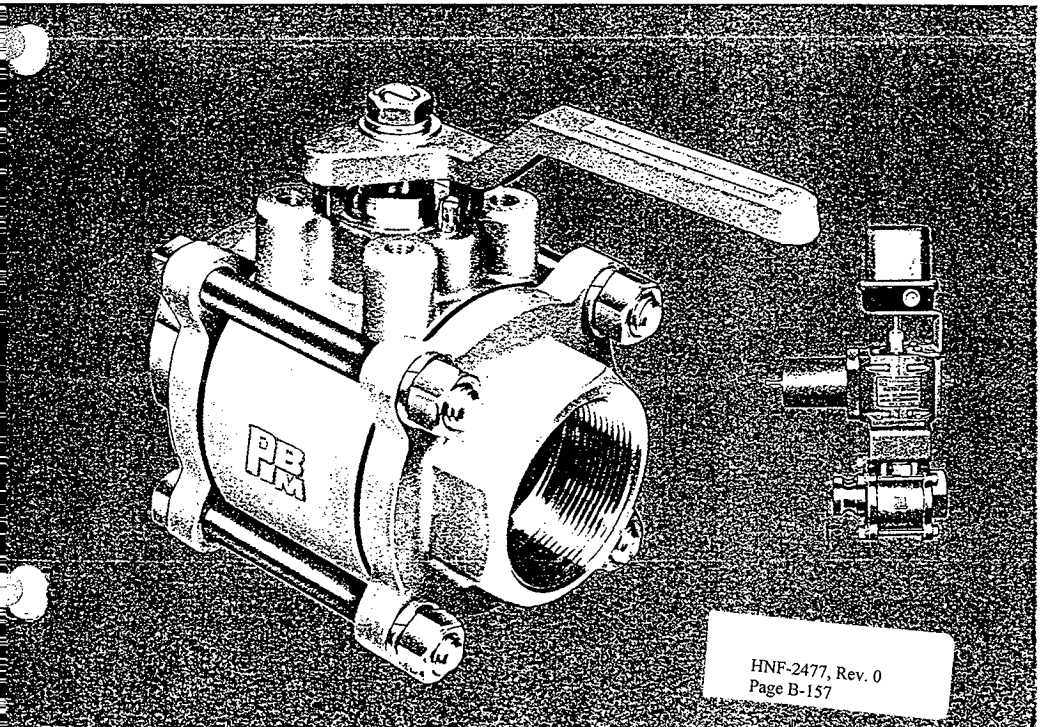

Engineering Data

Dimensions for SP SERIES

Female NPT • Socket Weld

¼″ thru 4″

Butt Weld

½″ thru 4″

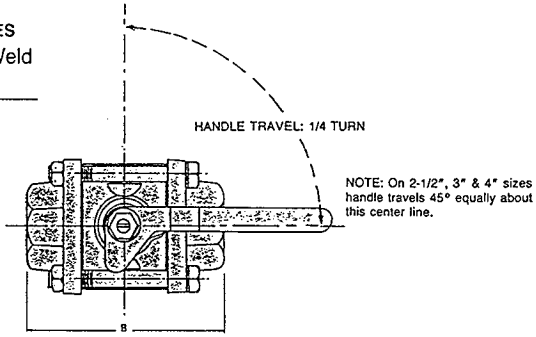

1/4", 3/8", 1/2", 3/4" & 1" valves have 3 bolts
1-1/4", 1-1/2", 2" & 2-1/2" valves have 4 bolts
3" valves have 6 bolts
4" valves have 8 bolts

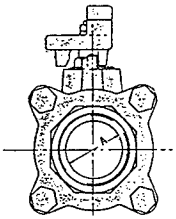

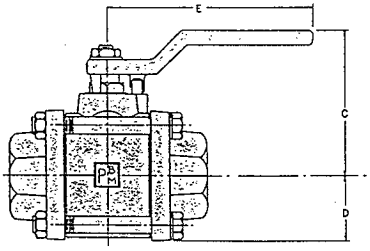

FEMALE NPT

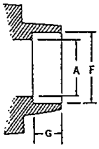

SOCKET WELD

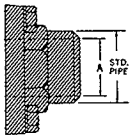

BUTT WELD

PIPE SIZE (Inch)	FEMALE NPT					SOCKET WELD		APPROX. WT. (LBS.)				
	A Port Dia.	B Length	C Height	D	E Handles	F Dia.	G Depth	Bronze	Iron	S/S	AL	C/S
¼″	.62″	3.12″	2.16″	1.34″	3.69″	.56″	.81″	2	1½	1¾	¾	1¾
⅜″	.62″	3.12″	2.16″	1.34″	3.69″	.69″	.81″	2	1½	1¾	¾	1¾
½″	.62″	3.12″	2.16″	1.34″	3.69″	.86″	.81″	2	1½	1¾	¾	1¾
¾″	.81″	3.44″	2.28″	1.47″	3.69″	1.06″	.81″	2¼	1¾	2¼	¾	2¼
1″	1.00″	3.88″	2.86″	1.69″	4.31″	1.34″	.94″	3¾	3	3½	1¼	3½
1¼″	1.25″	4.54″	3.78″	1.56″	5.50″	1.69″	1.12″	7½	6¼	7¼	2½	7¼
1½″	1.50″	5.38″	4.03″	1.70″	5.50″	1.92″	1.16″	9½	8	9	3	9
2″	1.94″	5.75″	4.38″	2.03″	5.50″	2.41″	1.12″	12¾	11½	12½	4	12½
2½″	2.50″	8.31″	5.31″	2.77″	12.00″	2.94″	1.56″	31½	28½		10	
3″	2.75″	8.62″	6.69″	3.88″	12.00″	3.55″	1.88″	50	45	48	16	48
4″	3.50″	10.50″	7.14″	4.47″	12.00″	4.55″	2.12″	82	75	72	26	72

(NOTE: Male NPT, Solder-Joint, T-Klamp, Cherry Burrell, Sil-Braze, and Grooved Ends are available in certain sizes and metals. Call or write us for data.)

PIPE SIZE (Inch)	BUTT WELD					APPROX. WT. (LBS.)			
	A Port Dia.	B Length	C Height	D	E Handle	Iron	S/S	AL	C/S
½″	.62″	3.12″	2.16″	1.34″	3.69″	1¾	2	¾	2
¾″	.81″	3.44″	2.28″	1.47″	3.69″	2	2½	1	2½
1″	1.00″	3.88″	2.86″	1.69″	4.31″	3¼	3¾	1½	3¾
1½″	1.50″	5.38″	4.03″	1.70″	5.50″	8½	9½	3¼	9½
2″	1.94″	5.75″	4.38″	2.03″	5.50″	12	13	4¼	13
3″	2.75″	8.62″	6.69″	3.88″	12.00″	45½	48½	16	48½
4″	3.50″	10.50″	7.14″	4.47″	12.00″	76	73	26½	73

Sch 40 dimensions shown. Sch 10 and Sch 5 Butt Weld Ends also available.

Metals and their properties

316 STAINLESS STEEL (Austenitic Grade)—complies with A351-GR-CF8M.
This metal is exceptionally corrosive-resistant to such reducing solutions as sulphuric and fatty acids. Since it does not pit readily, it is a good choice for handling acetic acid and chloride operations, including sea water.

BRONZE—complies with ASTM Spec. No. B-62 (CDA Alloy No. 836).
The superior properties of this metal recommend it as the ideal choice for all general purpose (non-corrosive) applications. It is versatile and well suited for steam, air, water, oil and gas lines. "UL" listed in sizes up to 2" with F.N.P.T. ends.

IRON—complies with ASTM Grade 32510.
This highly popular material provides almost the same high strength of steel, but it is priced somewhat lower. It features extreme resistance to shock, vibration, fire, and freezing hazards and is recommended for water, air, natural gas and oil services. "UL" listed in sizes up to 4" with F.N.P.T. ends.

CARBON STEEL—complies with A216-WCB.
This is a highly versatile material, with extreme strength, making it very useful when valves require unusual resistance to shock, vibration, fire and freezing hazards. It efficiently handles water, air, natural gas and oil and other non-corrosive media.

ALUMINUM—complies with SG-70A-T6.
This material, noted equally for its strength and lightness, becomes an ideal choice for handling such media as nitric, chromic, and most of the organic acids.

For Valve sizes in each of these metals, please see Materials of Construction Chart, Page 5.

C_V factors for 'SP' series Ball Valves

C_V is defined as the number of U.S. gallons of water per minute, at standard conditions (60 F° @ 14.7 PSIA) that will flow through a valve at a 1 PSIG Pressure drop across the Valve.

PIPE SIZE	"SP" SIZE	C_V FACTOR
¼"	SP-12-.25	18
⅜"	SP-12-.375	18
½"	SP-12	18
¾"	SP-13	35
1"	SP-14	53
1-¼"	SP-15	83
1-½"	SP-16	120
2"	SP-17	200
2-½"	SP-18	330
3"	SP-19	400
4"	SP-20	650
6"	SP-22	1450
8"	SP-24	2050

Nomenclature

GPM — U.S. Gallons per Minute
W — Pound per hour*
Q — Cubic feet per hour @ 60°F and 14.7 PSIA
G — Specific Gravity
$\bar{V}$ — Specific volume of inlet steam
°F — Inlet gas temperature
P_1 — Inlet pressure in PSIA
P_2 — Outlet pressure in PSIA
ΔP — Pressure drop across the valve in PSI. Must not be greater than half the absolute inlet pressure
PSIA = PSIG + 14.7

*Pounds per hour may be converted to standard cubic feet per hour by the following formula.

$$Q = \frac{W}{0.0764\ G}$$

The Sizing Formulas

(1). LIQUID:

$$C_V = GPM \sqrt{\frac{G}{\Delta P}}$$

$$GPM = C_V \sqrt{\frac{\Delta P}{G}}$$

$$\Delta P = \left[\frac{GPM}{C_V}\right]^2 (G)$$

(2). SATURATED STEAM

$$C_V = \frac{W}{2.1} \sqrt{\frac{1}{\Delta P\ (P_1 + P_2)}}$$

$$W = 2.1\ C_V \sqrt{\Delta P} \sqrt{P_1 + P_2}$$

$$\Delta P = \left[\frac{C_V}{.0159\ W}\right]^2 \bar{V}$$

(3). GAS:

$$C_V = \frac{Q}{1360} \sqrt{\frac{G\ (460 + °F)}{\Delta P}} \sqrt{\frac{2}{P_1 + P_2}}$$

$$Q = (1360)\ C_V \sqrt{\frac{\Delta P}{G\ (460 + °F)}} \sqrt{\frac{P_1 + P_2}{2}}$$

$$\Delta P = \left[\frac{Q}{(1360)\ C_V}\right]^2 \left[\frac{(460 + °F)\ G}{P_1}\right]$$

Bolt Configurations

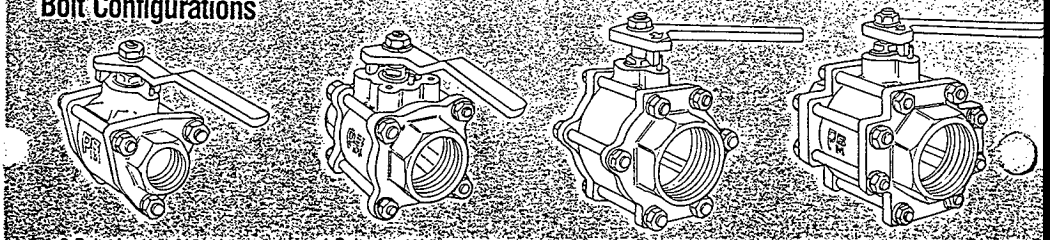

3 Bolts for ¼", ⅜", ½", ¾" and 1" Valves

4 Bolts for 1¼", 1½", 2" and 2½" Valves

6 Bolts for 3" Valves

8 Bolts for 4", 6" and 8" Valves

Multi-Port Ball Valves

Three, Four, and Five-Way

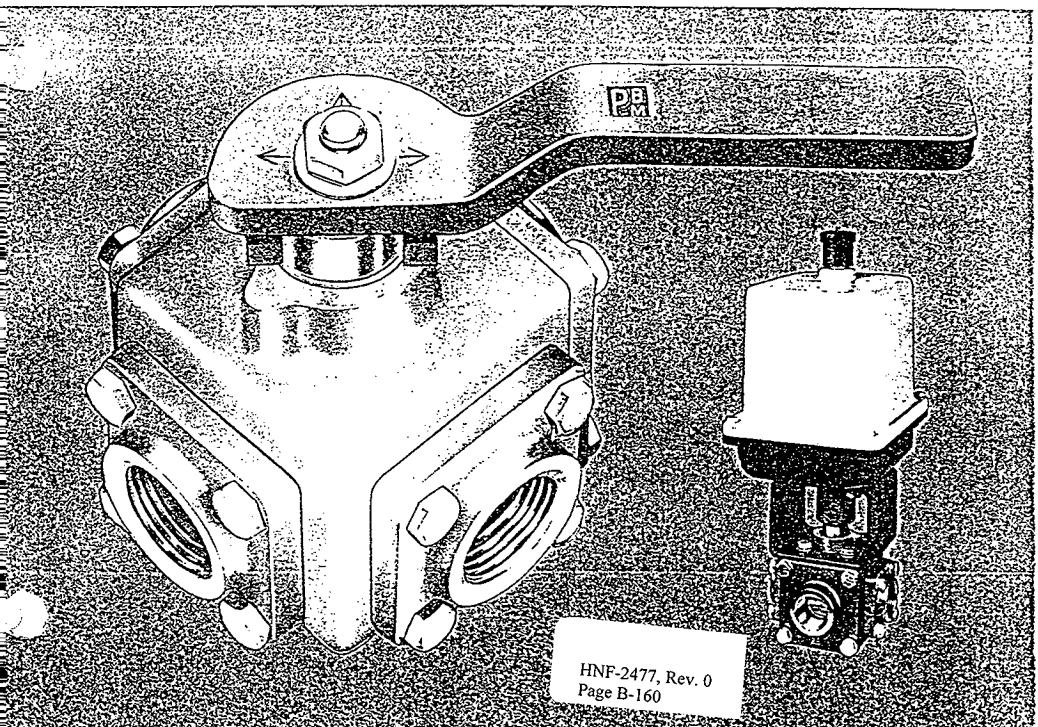

HNF-2477, Rev. 0
Page B-160

RBM INC. P.O. BOX 387 A Sandy Hill Road Irwin PA 15642-9401 • 412-863-0550 • FAX 412-864-0255

3 & 4-way BT

Dimensions for

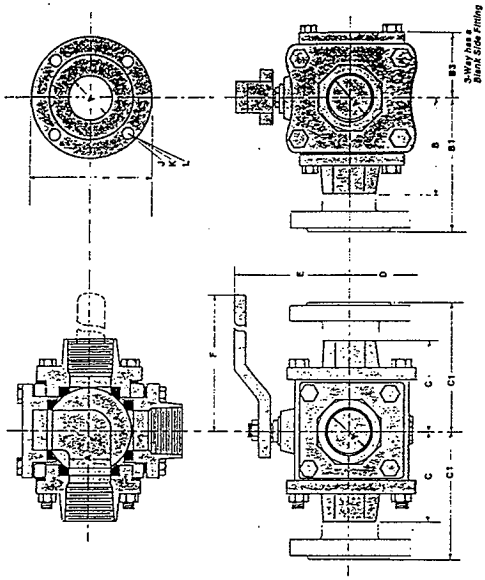

Female NPT

PIPE SIZE (inch)	A Port Dia.	B Center to Side	B3 Center to Blank Side	C Center to End	D Center to Bottom	E Height	F Handle	3-Way Wt. (lbs.)** Bronze
1"	1.06"	2.94"	1.75"	2.75"	1.78"	3.80"	6.12"	13
1¼"	1.06"	2.94"	1.75"	2.75"	1.78"	3.80"	6.12"	16
1½"	1.62"	3.95"	2.84"	3.67"	2.69"	4.75"	12.00"	30
2"	1.62"	3.83"	2.84"	3.53"	2.69"	4.75"	12.00"	35

150# RF Flange (F15)

PORT SIZE (inch)	B1 Center to Side	C1 Center to End	I Flg. O.D.	J Dia. B.C.	K No. Bolt Holes	L Bolt Dia.	3-Way Wt. (lbs.)** Bronze
1½"	4.95"	5.70"	5.00"	3.88"	4	.50"	46
2"	5.02"	5.77"	6.00"	4.75"	4	.62"	59

*L Port shown. See Flow Charts, pages 5 & 6, for other possibilities
**Weights for Aluminum and for 4 Way supplied upon request.

C_V Factors for MP and BT Series Ball Valves

C_V is defined as the number of U.S. gallons of water per minute, at standard conditions (60°F @ 14.7 PSIA) that will flow through a valve at a 1 PSIG pressure drop across the Valve.

Pipe Size	PBM Code	Straight Thru C_V	Side C_V	LL Port C_V
½"	12	16	10	8
¾"	13	16	10	8
1"	14	45	25	22
1¼"	15	45	25	22
1½"	16	100	56	46
2"	17	180	100	78
3"	19	228	127	90
4"	20	405	225	175

Nomenclature

GPM — U.S. Gallons per Minute
W — Pound per hour*
Q — Cubic feet per hour @ 60°F and 14.7 PSIA
G — Specific Gravity
$\bar{V}$ — Specific volume of inlet steam
°F — Inlet gas temperature
P_1 — Inlet pressure in PSIA
P_2 — Outlet pressure in PSIA
ΔP — Pressure drop across the valve in PSI. Must not be greater than half the absolute inlet pressure
PSIA = PSIG + 14.7

*Pounds per hour may be converted to standard cubic feet per hour by the following formula.

$$Q = \frac{W}{0.0764\ G}$$

The Sizing Formulas

(1). LIQUID:

$$C_V = GPM\sqrt{\frac{G}{\Delta P}}$$

$$GPM = C_V\sqrt{\frac{\Delta P}{G}}$$

$$\Delta P = \left[\frac{GPM}{C_V}\right]^2 (G)$$

(2). SATURATED STEAM

$$C_V = \frac{W}{2.1}\sqrt{\frac{1}{\Delta P\,(P_1 + P_2)}}$$

$$W = 2.1\ C_V\sqrt{\Delta P}\ \sqrt{P_1 + P_2}$$

$$\Delta P = \left[\frac{\bar{V}}{\frac{C_V}{.0159\ W}}\right]^2$$

(3). GAS:

$$C_V = \frac{Q}{1360}\sqrt{\frac{G\,(460 + °F)}{\Delta P}}\sqrt{\frac{2}{P_1 + P_2}}$$

$$Q = (1360)\ C_V\sqrt{\frac{\Delta P}{G\,(460 + °F)}}\sqrt{\frac{P_1 + P_2}{2}}$$

$$\Delta P = \left[\frac{Q}{(1360)\ C_V}\right]^2\left[\frac{(460 + °F)\ G}{P_1}\right]$$

Model CMF300 Mass Flow and Density Sensor

Direct mass flow and density measurement at flow rates from 0 to 10,000 lb/min (0 to 272,100 kg/hr).

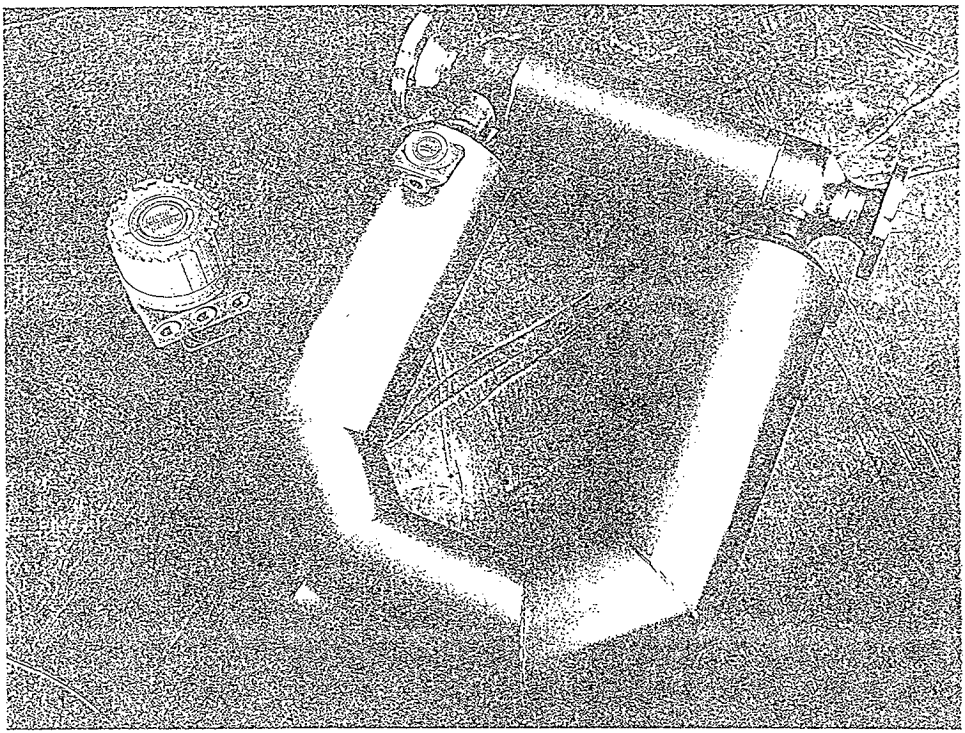

MICRO MOTION ROSEMOUNT®

Measurement
Control
Analytical
Valves

Model CMF300

Micro Motion's ELITE™ Model CMF300 sensor offers the most accurate mass flow and density measurement for a variety of fluid processes, while exhibiting exceptionally low pressure drop. The flow tubes can accommodate up to 1450 psig (100 bar) and the compact housing safely contains pressure up to 150 psig (10 bar).

The Model CMF300, working with the microprocessor-based ELITE™ Model RFT9739 transmitter, directly measures the mass flow and density of process fluids at flow rates from 0 to 10,000 lb/min (0 to 272,100 kg/hr) and temperatures from -400 to 400°F (-240 to 204°C). The sensor and explosion-proof transmitter can be installed in the same hazardous area.

The Model CMF300 is available in a wide selection of standard fluid connections for virtually any fluid process.

CMF010
CMF025
CMF100
CMF200
CMF300

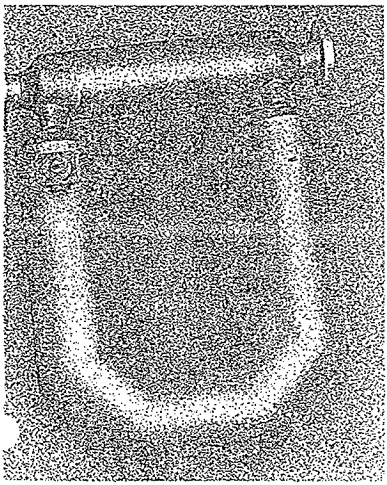

CMF300 physical specifications

Dimensions in inches (mm)

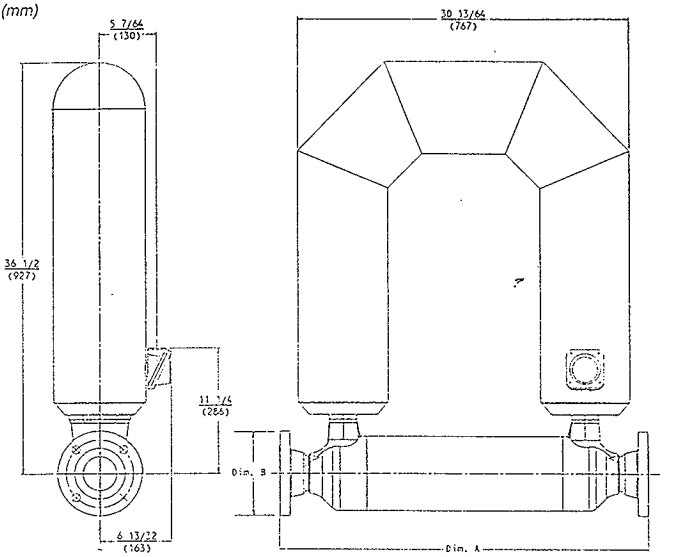

Fittings table

Description of 316L stainless steel fittings	Fitting code	Dim. A Face-to-face	Dim. B Outside diam.
3" ANSI 150 lb weld neck raised face flange	355	33 11/16 (856)	7 1/2 (191)
3" ANSI 300 lb weld neck raised face flange	356	34 7/16 (875)	8 1/4 (210)
3" ANSI 600 lb weld neck raised face flange	357	35 3/16 (894)	8 1/4 (210)
4" ANSI 150 lb weld neck raised face flange	425	34 1/16 (865)	9 (229)
4" ANSI 300 lb weld neck raised face flange	426	35 (889)	10 (254)
4" ANSI 600 lb weld neck raised face flange	427	36 11/16 (932)	10 3/4 (273)
3" sanitary fitting	361	32 (813)	3 9/16 (90)
80 mm DIN PN40 weld neck, DIN 2526, type C facing	391	32 7/8 (835)	7 7/8 (200)
100 mm DIN PN40 weld neck, DIN 2526, type C facing	392	33 7/16 (849)	9 1/4 (235)
80 mm DIN PN40 weld neck, DIN 2512, type N grooved facing	393	32 7/8 (835)	7 7/8 (200)
100 mm DIN PN40 weld neck, DIN 2512, type N grooved facing	394	33 7/16 (849)	9 1/4 (235)
80 mm DIN PN100 weld neck, DIN 2526, type C facing	395	34 9/16 (878)	9 1/16 (230)
100 mm DIN PN100 weld neck, DIN 2526, type C facing	396	35 9/16 (903)	10 7/16 (265)
80 mm DIN PN100 weld neck, DIN 2512, type N grooved facing	397	34 9/16 (878)	9 1/16 (230)
100 mm DIN PN100 weld neck, DIN 2512, type N grooved facing	398	35 9/16 (903)	10 7/16 (265)
80 mm JIS 10K weld neck, JIS facing	400	33 3/8 (848)	7 5/16 (186)
100 mm JIS 10K weld neck, JIS facing	401	33 9/16 (852)	8 1/4 (210)
80 mm JIS 20K weld neck, JIS facing	402	33 3/8 (848)	7 7/8 (200)
100 mm JIS 20K weld neck, JIS facing	403	33 9/16 (852)	10 1/16 (256)
Special - contact factory	999	----	----

Description of Hastelloy® C-22 fittings

3" ANSI 150 lb lap joint flange	550	33 11/16 (856)	7 1/2 (191)
3" ANSI 300 lb lap joint flange	551	34 7/16 (875)	8 1/4 (210)
80 mm JIS 10K lap joint flange, JIS facing	552	33 3/8 (848)	7 5/16 (186)
80 mm DIN PN40 lap joint flange, DIN 2526, type C facing	553	32 7/8 (835)	7 7/8 (200)

,ow Rate vs. Pressure Drop

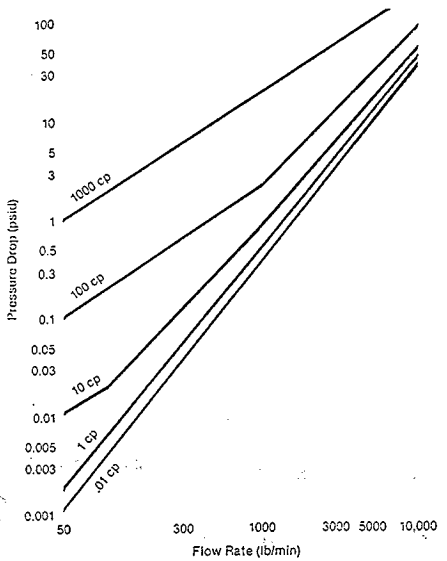

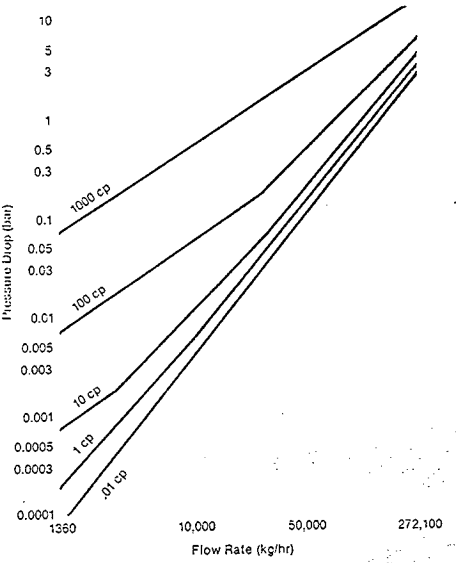

Finding pressure drop of process fluids with a viscosity near 1 centipoise (1 cp)

1. The pressure drop charts shown above have several curves, which represent different viscosity (cp) values. For fluids with a viscosity similar to water, use the curve labeled 1 cp.
2. Locate the point on the English Units or Metric Units graph where the vertical line representing the desired flow rate intersects the curve labeled 1 cp.
3. From that point, locate the nearest horizontal line, then refer to the left side of the graph, which indicates pressure drop (in psi or bar) at the desired flow rate.
4. Divide the pressure drop indicated on the graph by the specific gravity (S) of the process fluid relative to water:

$$\Delta P_{actual} = \Delta P_{plotted}/S_{relative\ to\ water}$$

Finding pressure drop of process fluids with a viscosity above 1 centipoise (1 cp)

1. The pressure drop charts shown above have several curves, which represent different viscosity (cp) values. Use method a or b, below, to find the process fluid viscosity ($f_{viscosity}$).

a. For fluids with a viscosity between any two values plotted on the English Units or Metric Units graph, interpolate the approximate $f_{viscosity}$ location.

b. For fluids with a viscosity above the highest value plotted on the graph, find the ratio of actual viscosity to plotted viscosity:

$$f_{viscosity} = cp_{actual}/cp_{plotted}$$

2. Multiply the pressure drop indicated on the left side of the graph by the $f_{viscosity}$ value from step 1:

$$\Delta P = \Delta P_{plotted} \times f_{viscosity}$$

3. To find the actual pressure drop, divide the ΔP from step 2 by the specific gravity (S) of the process fluid relative to water:

$$\Delta P_{actual} = \Delta P/S_{relative\ to\ water}$$

CMF300 performance specifications

Flow

Maximum range
0 to 10,000 lb/min (0 to 272,100 kg/hr)

Rangeability
80:1

Accuracy
± 0.15% ± [(zero stability / flow rate) x 100]% of rate

Repeatability
± 0.05% ± [½(zero stability / flow rate) x 100]% of rate

Zero stability[1]
0.25 lb/min (6.80 kg/hr)

Density

Accuracy
± 0.0005 g/cc

Repeatability
± 0.0002 g/cc

Temperature

Accuracy
± 1°C ± 0.5% of reading in °C

Rating
-400° to 400°F (-240° to 204°C)

Pressure influence on sensor[2]

Flow outputs
-0.0006%/psi (-0.009%/bar)

Density outputs
+0.0000002 g/cc/psi (+0.0000029 g/cc/bar)

Pressure ratings
(Based on ASME B31.3)

Flow tubes
1450 psig (100 bar)

Housing
150 psig (10 bar)

Milliamp output rangeability
(for either 4-20 mA or 0-20 mA)

	Minimum span	Range limit
Flow	125 lb/min (3400 kg/hr)	-10,000 to 10,000 lb/min (-272,100 to 272,100 kg/hr)
Density	0.1 g/cc	0 to 5 g/cc
Temperature	36°F (20°C)	-400° to 400°F (-240° to 204°C)

Hazardous area classifications

Intrinsically safe when properly connected to an approved transmitter.

UL and CSA	Class I, Div. 1, Groups C and D Class I, Div. 2, Groups A,B,C,and D Class II, Div. 1, Groups E, F, and G
CENELEC	Exib IIB
SAA	Exib IIB

Wetted materials

316L stainless steel
Hastelloy® C-22

Housing materials

304L stainless steel

Shipping weight

162 lb (73.5 kg) with 3" ANSI 150 lb weld neck raised face flange

[1] *Zero set at process temperature ±36° (±20°C).*
[2] *Pressure influence can be minimized or eliminated through a variety of techniques. Contact your local sales representative or Micro Motion for more information.*

Appendix N

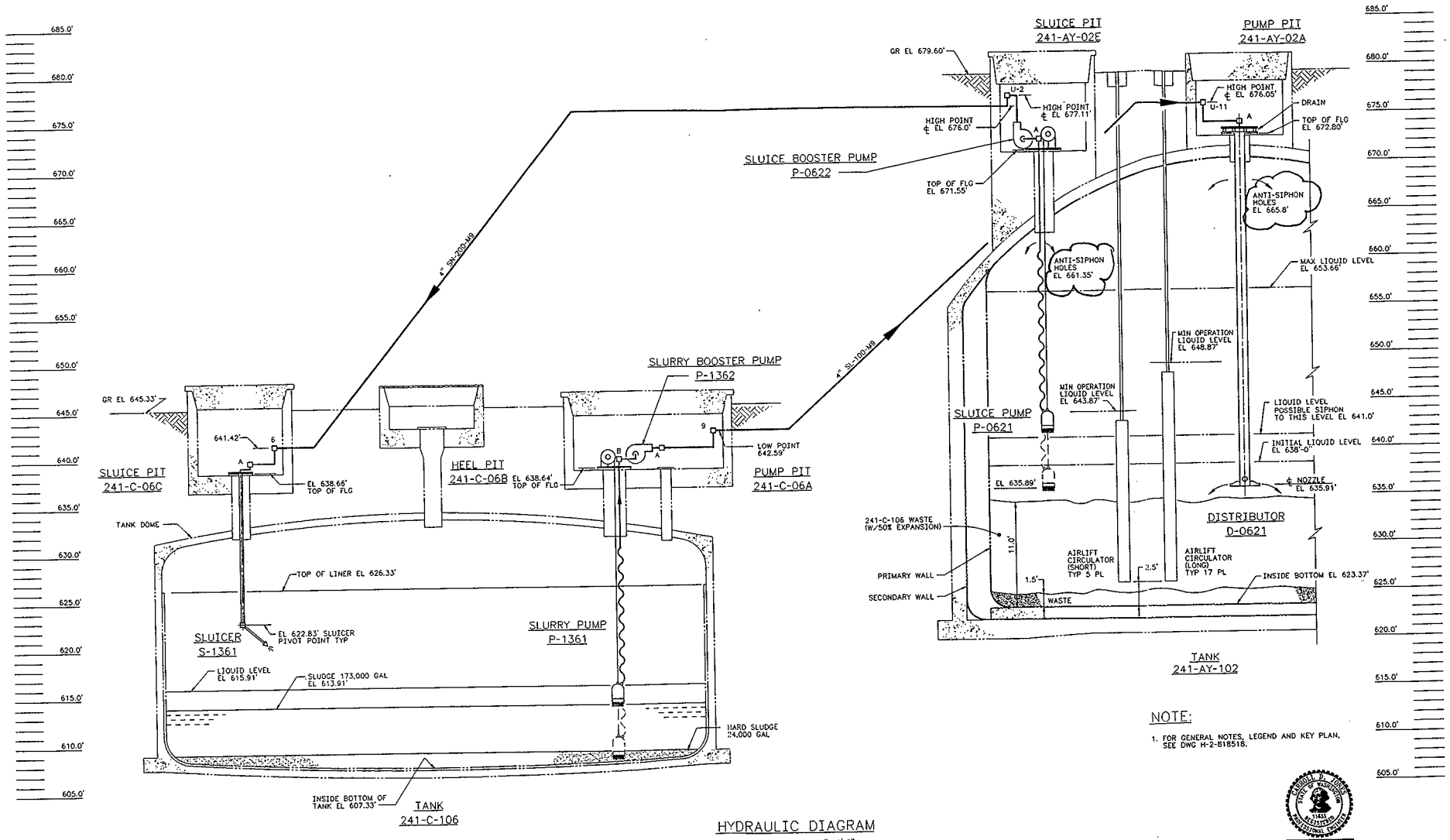

HYDRAULIC DIAGRAM

SCALE: VERTICAL - 1/4"= 1'-0"
HORIZONTAL - NONE

NOTE:

1. FOR GENERAL NOTES, LEGEND AND KEY PLAN, SEE DWG H-2-818518.

DESIGNED	B. MEYER sr
SAFETY	SEE DR/AT FORM
CIVIL	SEE DR/AT FORM
SAFETY CLASS	3
USE	PRELIMINARY
U.S. DEPARTMENT OF ENERGY RICHLAND OPERATIONS OFFICE ICP KAISER HANFORD COMPANY	
PIPING PROJECT W-320 HYDRAULIC DIAGRAM	
W-320 TANK 241-C-106 SLUICING	
REVISION NO.	12
SCALE	SHOWN
H-2-818536	REV NO. 0
SHEET 1 OF 1	
CAD FILE	B818536A
CAD CODE	2B:IBM:ACD2:12.0:NN
SHEETS	N

2 PLOT SCALE: 1=48 KEHCAD

NUMBER	TITLE
H-2-818423	DRAWING LIST

DRAWING TRACEABILITY LIST

NO	REV NO.	DESCRIPTION	REV BY DATE	KCH APPROVALS

REVISIONS

APPROVED FOR IMPLEMENTATION

BY WHC DATE

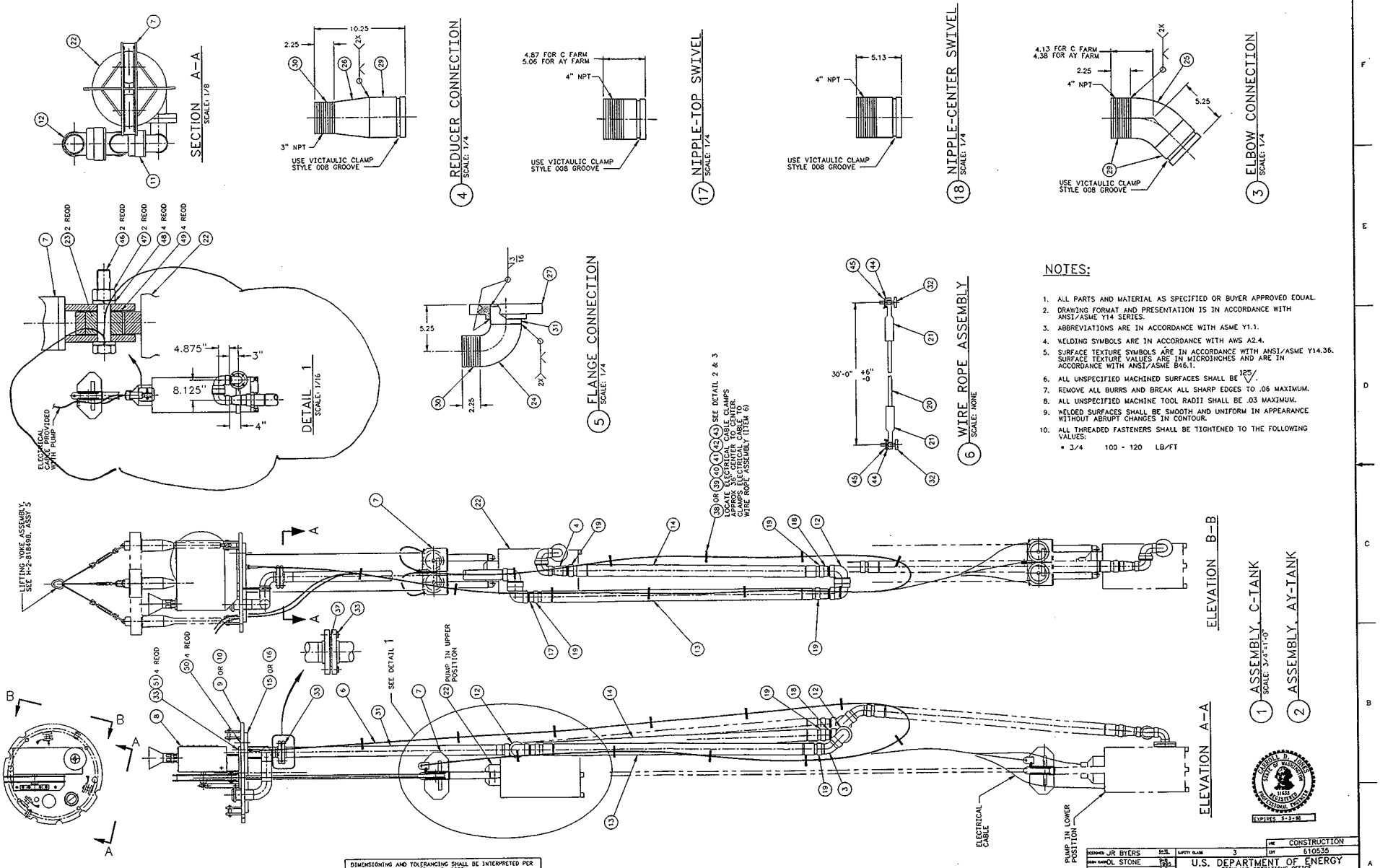

NOTES:

1. ALL PARTS AND MATERIAL AS SPECIFIED OR BUYER APPROVED EQUAL.
2. DRAWING FORMAT AND PRESENTATION IS IN ACCORDANCE WITH ANSI/ASME Y14 SERIES.
3. ABBREVIATIONS ARE IN ACCORDANCE WITH ASME Y1.1.
4. WELDING SYMBOLS ARE IN ACCORDANCE WITH AWS A2.4.
5. SURFACE TEXTURE SYMBOLS ARE IN ACCORDANCE WITH ANSI/ASME Y14.36. SURFACE TEXTURE VALUES ARE IN MICROINCHES AND ARE IN ACCORDANCE WITH ANSI/ASME B46.1.
6. ALL UNSPECIFIED MACHINED SURFACES SHALL BE 125 √.
7. REMOVE ALL BURRS AND BREAK ALL SHARP EDGES TO .06 MAXIMUM.
8. ALL UNSPECIFIED MACHINE TOOL RADII SHALL BE .03 MAXIMUM.
9. WELDED SURFACES SHALL BE SMOOTH AND UNIFORM IN APPEARANCE WITHOUT ABRUPT CHANGES IN CONTOUR.
10. ALL THREADED FASTENERS SHALL BE TIGHTENED TO THE FOLLOWING VALUES:
    - 3/4 100 - 120 LB/FT

DIMENSIONING AND TOLERANCING SHALL BE INTERPRETED PER ANSI Y14.5M-1982
DIMENSIONS ARE IN INCHES UNLESS OTHERWISE SPECIFIED
UNSPECIFIED TOLERANCES SHALL BE:
DECIMAL .X ± .1 .XX ± .03 .XXX ± .010
ANGULAR ± 2°
ALL IMPLIED 90° ANGLES SHALL BE PERPENDICULAR WITHIN THE GREATEST TOLERANCE OF THE LINEAR DIMENSIONS
ALL COAXIAL FEATURES SHALL BE CONCENTRIC WITHIN .032 DIAMETER, UNLESS OTHERWISE SPECIFIED.

NUMBER	TITLE	NUMBER	TITLE
	BILLING TRACEABILITY LIST		REFERENCES

NEXT USED ON H-2-818494

REV NO.	DESCRIPTION	BY	DATE
1	W-320-XXX GEN DWG REV PER ECN -223, -226, -232,& -428 REV TO INCORP ECNS W-320-135,	BAM	9-6-96

REVISIONS

CAD FILE B495AR1 CAD CODE WIN95:ACD2:12.0:SS SHEET N

DESIGNED	JR BYERS	DATE	
DRAWN BY	OL STONE	DATE	
CHECKED	MICHAEL R CUSTER	DATE	
SAFETY	SEE DR/AT FORM		
QA/QC	SEE DR/AT FORM		
DCN ENG	SEE DR/AT FORM		
LEAD ENG	CD JONES	DATE	
REVIEW NO.	12		

APPROVED FOR INCORPORATION BY THOMAS H. MAY FOR WHC DATE 9-13-95

SAFETY CLASS 3 USE CONSTRUCTION DWG 610535

U.S. DEPARTMENT OF ENERGY
RICHLAND OPERATIONS OFFICE
ICF KAISER HANFORD COMPANY

PIPING
PUMP AND WINCH ASSEMBLY

PROJECT W-320 TANK 241-C-106 SLUICING

SIZE	BLDG NO.	DWG NO.	REV NO.
F	241-C 4750	H-2-818495	1

SCALE SHOWN JOB NO. ER4319 SHEET 1 OF 2

PLOT SCALE: 1-16 KEHCAD

EXPIRES 5-3-96

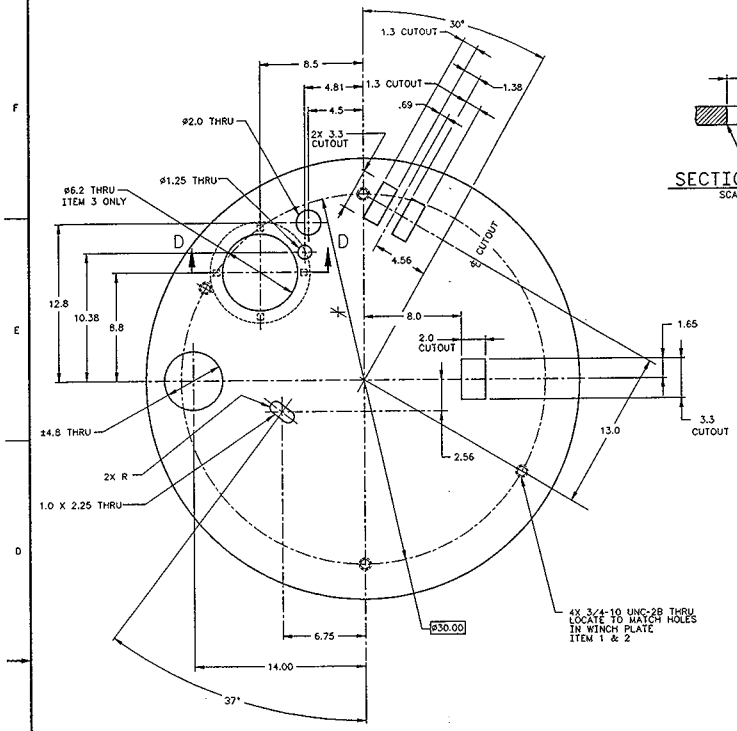

PLAN

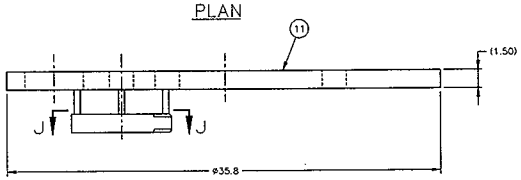

SHIELDING PLATE

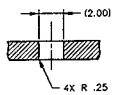

SECTION B-B FROM SH 1
SCALE: 1/4

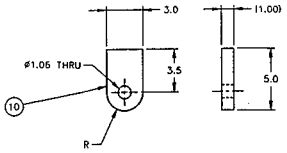

DETAIL 1 FROM SH 1
SCALE: 1/4

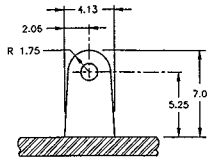

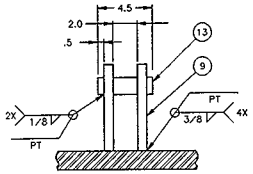

DETAIL 2
SCALE: 1/4

PART/MATERIAL LIST

QTY REQD -070	-060	-050	-040	-030	-020	-010	PART/DASH NUMBER	NOMENCLATURE/DESCRIPTION	MATERIAL/REFERNCE	SHEET	ITEM NO.
								(CONTINUTED FROM SHEET 1)			
					1	1		CABLE PIN, MADE FROM ø1.625 BAR	ASTM A-276 TYPE 304L SST		31
					1	1		FLANGE, 4" SLIP ON RF 300 LB	ASTM A-182 GR F 304L SST		32
1								FLANGE, 4" LAP JOINT 300 LB	ASTM A-182 GR F 304L SST		33
1								STUB, LAP JOINT END, 4: SCHED 40S	ASTM A-403 WP-S 304L		34
					1	1		WASHER, PLAIN 1" RGLR SERIES, TP B	ANSI B18.22.1 ANY 300 SERIES SST		35
					1	1		COTTER PIN ø3/32 x 2" L	ANSI B18.8.1 18-8 SST		36
					1	1	-070	ADAPTER PIPE ASSEMBLY		3	37
						1		DOWEL PLATE ASSEMBLY			38
						2		HOOK BLOCK, PLATE 2 THK	ASTM A-36		39
						2		IDLE WHEEL, PLATE 15/16 THK	ASTM A-36		40
						1		WASHER, PLATE 1/2 THK	ASTM A-36		41
						AR		NYLON ROPE, 3/16 x L AS REQD W/CRIMPS	COMMERICAL		42
						3		BOLT, FLAT HD 5/8-11 UNC-2A X 2 L	ANSI B18.6.3		43
						2		BOLT, HEX HD 1/2-13 UNC-2A X 1 1/2 L W/ 1/2 L THREADED	ANSI B18.2.1		44
						2		NUT, HEX 1/2-13 UNC-2B	ANSI B18.2.2 GR 2		45
						1		PULLEY, 3/16" DOUBLE SHEAVE W/STRAP	COMMERICAL		46
						AR		TS 2 1/2 X 2 1/2 X 1/4	ASTM A-500 GR B		47
						AR		PIPE, 1 1/4 SCHED 80 X L AS REQD	ASTM A-106 GR B		48
						AR		PIPE, 3/4 SCHED 40 X L AS REQD	ASTM A-106 GR B		49
						AR		PLATE 1 THK	ASTM A-36		50
						AR		BAR 1 1/4 ROUND	ASTM A-36		51
						AR		BAR 1/2 ROUND	ASTM A-36		52
	AR					AR		BAR 3/8 ROUND	ASTM A-36		53
						AR		BAR 1/4 ROUND	ASTM A-36		53

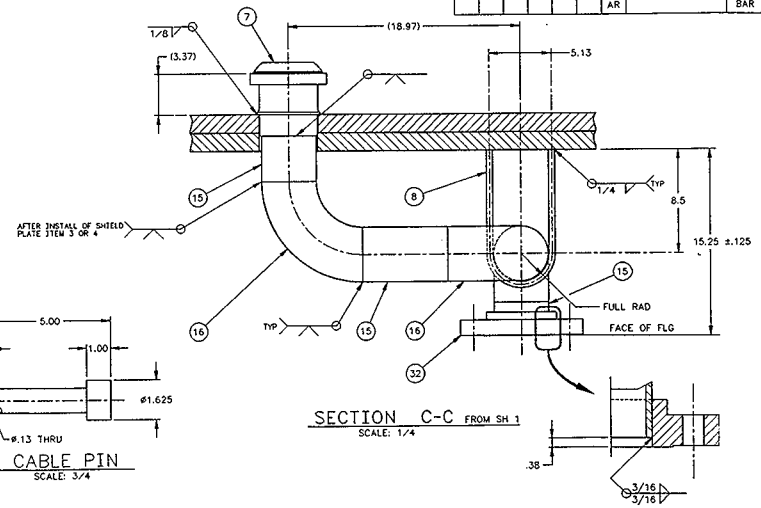

SECTION C-C FROM SH 1
SCALE: 1/4

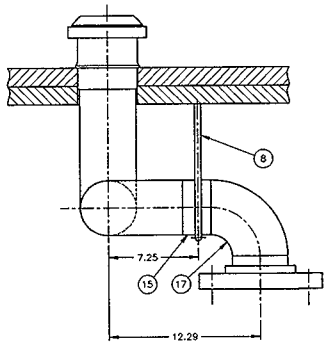

SECTION F-F FROM SH 1
SCALE: 1/4

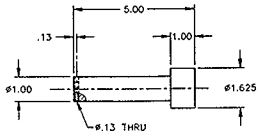

31 CABLE PIN
SCALE: 3/4

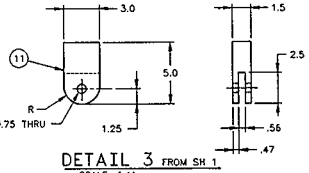

DETAIL 3 FROM SH 1
SCALE: 1/4

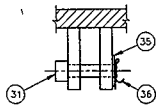

DETAIL 4 FROM SH 1
SCALE: 1/4

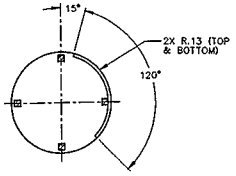

SECTION J-J
SCALE: 1/4

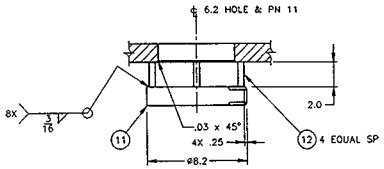

SECTION D-D
SCALE: 1/4

DIMENSIONING AND TOLERANCING SHALL BE INTERPRETED PER ANSI Y14.5M-1982
DIMENSIONS ARE IN INCHES UNLESS OTHERWISE SPECIFIED
UNSPECIFIED TOLERANCES SHALL BE:
DECIMAL .X ±.1 .XX ± .03 .XXX ± .010
ANGULAR ± NONE
ALL IMPLIED 90° ANGLES SHALL BE PERPENDICULAR WITHIN THE GREATEST TOLERANCE OF THE LINEAR DIMENSIONS
ALL COAXIAL FEATURES SHALL BE CONCENTRIC WITHIN .032 DIAMETER, UNLESS OTHERWISE SPECIFIED.

REV NO.	DESCRIPTION	REV DATE	ENG APPROVALS
1	W-320-XXX -223,-365 & -393; GEN DWG REV ECN REV TO INCORP ECNS W-320-135,	BAM 9-18 96	

DRAWN	JR BYERS	DATE	CONSTRUCTION
DSN CHK	DL STONE	7-25-95	SAFETY CLASS 3
CHECKED	MICHAEL R CUSTER	7-25-95	CSF 610535
SAFETY	SEE DR/AT FORM		U.S. DEPARTMENT OF ENERGY
CHGE	SEE DR/AT FORM		RICHLAND OPERATIONS OFFICE
DSNL CHK	SEE DR/AT FORM		JCP KAISER HANFORD COMPANY
LEAD CHK	CD JONES	7-25-95	PIPING
APVD FOR PUBLIC RELEASE	REVIEW NO. 12	7-25-95	SHIELDING PLATE
APPROVED FOR CONSTRUCTION	THOMAS H MAY		PROJECT W-320 TANK 241-C-106 SLUICING
	FOR WHC	DATE 9-13-95	SIZE F / BLDG NO. 241-C / DWG NO. H-2-818498 / REV NO. 1
CAD FILE B498BR1	CAD CODE WIN95:ACD2:12.0:SS	SPCS N	SCALE 1/4 / JOB NO. ER4319 / SHEET 2 OF 6
			PLOT SCALE: 1=4 / KEHCAD

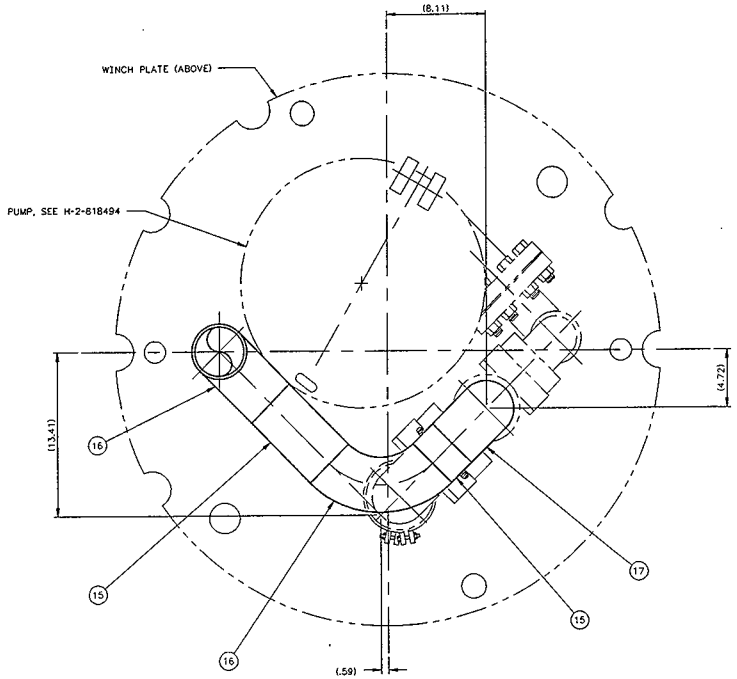

SECTION E-E FROM SH 1

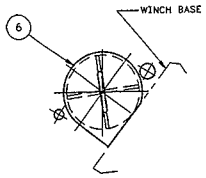

DETAIL 6
SCALE: NONE

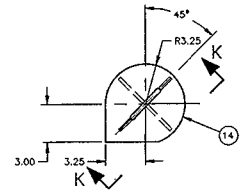

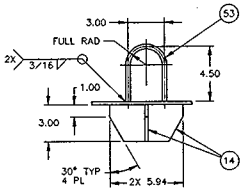

VIEW K-K

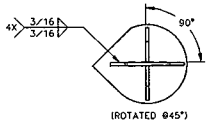

6 VENTILATION PLUG
SCALE: 1/4

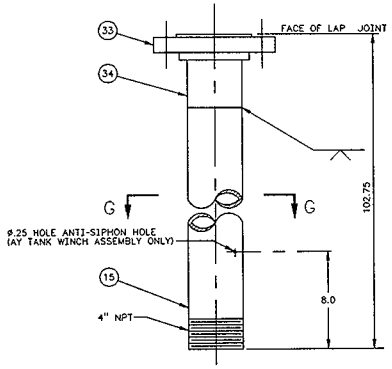

37 ADAPTER PIPE
SCALE: 1/4

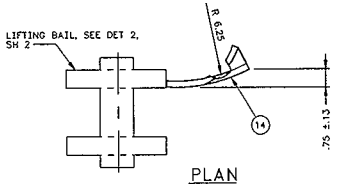

PLAN

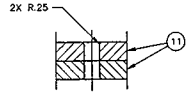

SECTION H-H FROM SH 1
SCALE: 1/4

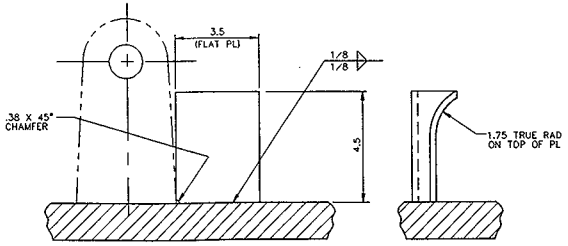

ELEV

DETAIL 5
SCALE: 1/2

DESIGNED BA MEYER	SAFETY CLASS 3
DRAWN EMR	
CHECKED	
SAFETY SEE DR/AT FORM	
CIVIL SEE DR/AT FORM	
PLUM. EMR SEE DR/AT FORM	
S.&B. EMR	
REVIEW NO. 1	10/28/94

MRC CONSTRUCTION
EDT 610535

U.S. DEPARTMENT OF ENERGY
RICHLAND OPERATIONS OFFICE
ICF KAISER HANFORD COMPANY

PIPING
WINCH & SHEILDING PLATE
DETAILS

PROJECT W-320 TANK 241-C-106 SLUICING

SIZE	SCALE NO.	SHEET NO.	DWG NO.	REV NO.
F	241-C	4750	H-2-818498	0

SCALE SHOWN | JOB NO. ER4319 | SHEET 3 OF 6

REV NO.	DESCRIPTION	REV BY DATE	RCH APPROVALS	APVD FOR DWG-CHK FOR DATE
	REVISIONS			

APPROVED FOR SUPERSEDURE
BY
FOR WHC DATE

SUB FILE B498CR0 | SUB DISC WIN95:ACD2:12.0:SS | UNIT N

2 PLOT SCALE: 1=4 | KEHCAD | 1

SCH/FOOT.DWG 608/950

NUMBER	TITLE	NUMBER	TITLE
	DRAWING TRACEABILITY LIST		REFERENCES

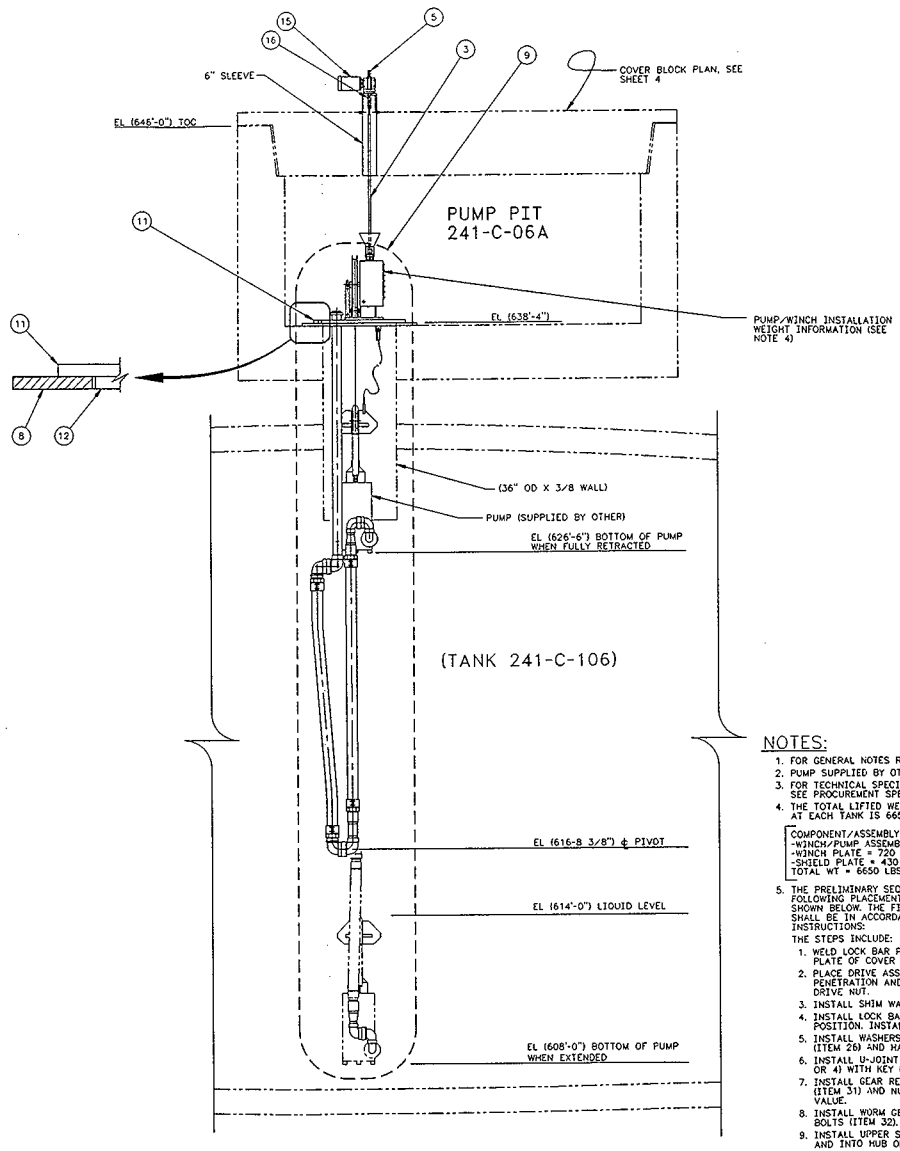

1 INSTALLATION-C TANK
LOOKING NORTH
PUMP ASSEMBLY ROTATED 37° CCW FOR CLARITY

PART/MATERIAL LIST

QTY REQD							-020	-010	PART/DASH NUMBER	NOMENCLATURE/DESCRIPTION	MATERIAL/REFERENCE	SHEET	ITEM NO.
								X	-010	INSTALLATION C TANK		1	1
							X		-020	INSTALLATION AY TANK		2	2
						X		1	-030	DRIVE ASSEMBLY (C-TANK)		3	3
					X		1		-040	DRIVE ASSEMBLY (AY-TANK)		3	4
				X			1	1	-050	UPPER SHAFT		3	5
			X					1	-060	DRIVE SHAFT (C-TANK)		3	6
		X					1		-070	DRIVE SHAFT (AY- TANK)		3	7
	X							1	H-2-818499-010	ADAPTER PLATE, C-TANK			8
X								1	H-2-818495-010	PUMP AND WINCH ASSEMBLY, C-TANK			9
							1		H-2-818495-020	PUMP AND WINCH ASSEMBLY, AY-TANK			10
							1	1	H-2-818498	WINCH PLATE, C-TANK/AY-FARM			11
							1	1	H-2-818498	SHIELD PLATE, C-TANK/AY-TANK			12
							1		H-2-818499-020	ADAPTER PLATE, AY-TANK			13
					1	1			5548HL	SOCKET	PROTO		14
							1	1	121F-1056S--H2L010	WORM GEAR DRIVE W/ 2.06CD, 1.5 HP MOTOR W/ 56C FRAME AND BRAKE	MORSE		15
							1	1	D-11B	U-JOINT, BORED FOR ø1.0 SHAFT W/ KEYWAY	LOVEJOY		16
													17
		AR	AR							ROUND ø1"	ASTM A36 CS		18
				AR						ROUND ø 1-1/2	ASTM A36 CS		19
					1	1				PIN, SLOTTED SPRING 1/4 X 1-1/2 L	ANSI B18.8.2/ASTM A-682 (GRADE 1095)		20
	X						1	1	-210	LOCK BAR ASSEMBLY		4	21
X							1	1	-220	GEAR REDUCER/MOTOR SUPPORT		4	22
	1								-230	LOCK BAR, FLAT 3" x 5/8"	ASTM A36 CS	4	23
	2								-240	PIN HOLE PLATE 1/2"	ASTM A36 CS	4	24
	2								-250	PULL HANDLE, ROUND BAR 3/8"	ASTM A36 CS	4	25
	2								-260	LOCK BAR PIN, ROUND 3/4"	ASTM A 307 GR B	4	26
	2								-270	SHIM WASHER, PLATE 1/4"	ASTM A36 CS	4	27
							1	1	98404A520	QUICK RELEASE PIN, 1/2" x 4" LG	McMASTER-CARR #95		28
							1	1	90312A32	LANYARD, 1/16" DIA WITH NYLON COAT AND TAB x 12" L	McMASTER-CARR #95		29
							6	6		NUT, HEAVY HEX 1/2"-13 UNC-2B	ASTM A 563 GR B		30
							6	6		WASHER, 1/2" PLAIN	ASTM F 436 TYPE 3		31
							4	4		BOLT, HEX HD, 3/8"-16UNC-2A x 1 1/2"L	ASTM A 307 GR B		32
							1	1		SCREW, ROUND HEAD, 1/4-20 UNC-2A x 3/4"L	ASTM A 307 GR B		33
													34
							AR	AR		PLATE 3/4" THK	ASTM A 36 CS		35
							AR	AR		PLATE 1/2" THK	ASTM A 36 CS		36
							4	4		ø 1/2-13 UNC-2A THREADED STUD	NELSON (TRW)	4	37
		1	1	1						KEY, BAR 3/8" x 3/8" x 1 1/2" LG	ASTM A 36 CS		38
				1			AR	AR		KEY, BAR 3/8" x 3/8" x 8" LG	ASTM A 36 CS		39

NOTES:

1. FOR GENERAL NOTES REFER TO DRAWING H-2-818495.
2. PUMP SUPPLIED BY OTHERS.
3. FOR TECHNICAL SPECIFICATION ON WINCH SYSTEM, SEE PROCUREMENT SPECIFICATION W-320-P24.
4. THE TOTAL LIFTED WEIGHT OF THE PUMP/WINCH INSTALLATION AT EACH TANK IS 6650 LBS, WHICH INCLUDES:

   COMPONENT/ASSEMBLY WEIGHTS
   -WINCH/PUMP ASSEMBLY = 5500 LBS (INCLUDES PUMP WT = 3000 LBS)
   -WINCH PLATE = 720 LBS
   -SHIELD PLATE = 430 LBS
   TOTAL WT = 6650 LBS

5. THE PRELIMINARY SEQUENCE FOR INSTALLING EQUIPMENT AND COMPONENTS FOLLOWING PLACEMENT OF THE COVER BLOCKS WILL INCLUDED THE STEPS SHOWN BELOW. THE FINAL CONFIGURATION AND SEQUENCE OF INSTALLATION SHALL BE IN ACCORDANCE WITH THE WINCH VENDOR'S WRITTEN INSTALLATION INSTRUCTIONS:

   THE STEPS INCLUDE:

   1. WELD LOCK BAR PINS (ITEM 26) ON EMBED PLATE OF COVER BLOCK.
   2. PLACE DRIVE ASSEMBLY (ITEM 3 OR 4) THROUGH COVER BLOCK PENETRATION AND ENGAGE DRIVE ASSEMBLY SOCKET WITH WINCH DRIVE NUT.
   3. INSTALL SHIM WASHERS (ITEM 27) ONTO LOCK BAR PINS (ITEM 26).
   4. INSTALL LOCK BAR ASSEMBLY (ITEM 21) AND ORIENT INTO THE LOCKED POSITION. INSTALL RELEASE PIN (ITEM 28).
   5. INSTALL WASHERS (ITEM 31) AND NUTS (ITEM 30) ONTO LOCK BAR PINS (ITEM 26) AND HAND TIGHTEN.
   6. INSTALL U-JOINT (ITEM 16) ONTO KEYED END OF DRIVE ASSEMBLY (ITEM 3 OR 4) WITH KEY (ITEM 38). TIGHTEN SET SCREW(S) ON U-JOINT HUB.
   7. INSTALL GEAR REDUCER/MOTOR SUPPORT (ITEM 22) USING WASHERS (ITEM 31) AND NUTS (ITEM 30) ONTO STUDS (ITEM 37). TORQUE NUTS TO TABLE VALUE.
   8. INSTALL WORM GEAR DRIVE (ITEM 15) ONTO SUPPORT (ITEM 22) USING BOLTS (ITEM 32). TORQUE TO TABLE VALUE.
   9. INSTALL UPPER SHAFT (ITEM 5) WITH KEY (ITEM 39) THROUGH REDUCER (ITEM 15) AND INTO HUB OF U-JOINT (ITEM 16). TIGHTEN SET SCREW(S) ON U-JOINT HUB.
   10. APPLY SUFFICIENT DOWNWARD FORCE ON UPPER SHAFT (ITEM 5) TO DISENGAGE LOCKING PLATE FROM DRIVE NUT OF WINCH ASSEMBLY. DO NOT BOTTOM LOCKING PLATE SPRINGS. LOCK UPPER SHAFT AND KEY (ITEMS 5 AND 39) USING SET SCREW(S) ON REDUCER HUB(S).
   11. REMOVE RELEASE PIN (ITEM 28), LOOSEN NUTS (ITEM 30) AND POSITION LOCK BAR ASSEMBLY (ITEM 21) IN THE UNLOCKED POSITION. HAND TIGHTEN NUTS (ITEM 30).

DRAWING LIST	SHEET	REVISION	TITLE
H-2-818442	1	0	PIPING SWIVELS
H-2-818443	1	0	PIPING FLAT WIRE ROPE
H-2-818444	1	0	PIPING HOSE ASSEMBLY
H-2-818494	1	0	PIPING PUMP & WINCH INSTALL-C TANK & DRAWING LIST
H-2-818494	2	0	PIPING PUMP & WINCH INSTALL-AY TK
H-2-818494	3	0	PIPING WINCH DRIVE ASSEMBLY
H-2-818494	4	0	PIPING WINCH MOTOR ASSEMBLY DETAILS
H-2-818495	1	0	PIPING PUMP AND WINCH ASSEMBLY
H-2-818495	1	0	PIPING WINCH ASSEMBLY
H-2-818496	2	0	PIPING WINCH PARTS LIST AND NOTES
H-2-818496	3	0	PIPING WINCH GEAR HOUSING DETAILS
H-2-818496	4	0	PIPING PUMP WINCH REEL DETAILS
H-2-818496	5	0	PIPING MISCELLANEOUS WINCH DETAILS
H-2-818496	6	0	PIPING PUMP WINCH DETAILS
H-2-818497	1	0	PIPING SHEAVE ASSEMBLY
H-2-818497	2	0	PIPING SHEAVE DETAILS
H-2-818498	1	0	PIPING WINCH PLATE
H-2-818498	2	0	PIPING SHIELDING PLATE
H-2-818499	1	0	PIPING ADAPTER PLATE C-TANK
H-2-818499	2	0	PIPING ADAPTER PLATE AY-TANK

CAROLL JONES STATE OF WASHINGTON 11633 REGISTERED PROFESSIONAL ENGINEER
EXPIRES: 5-3-96

USE	CONSTRUCTION		
DESIGNED JR BYERS DATE	SAFETY CLASS 3	DWG 610535	
DRAWN EMDR	U.S. DEPARTMENT OF ENERGY RICHLAND OPERATIONS OFFICE ICP KAISER HANFORD COMPANY		
CHECKED			
SAFETY SEE DR/AT FORM	PIPING PUMP & WINCH INSTALL-C TANK & DRAWING LIST		
CAVEAT SEE DR/AT FORM			
DUAL DWG SEE DR/AT FORM			
LEAD EMDR			
REVISION NO. 14	PROJECT W-320 TANK 241-C-106 SLUICING		REV NO.
APPROVED FOR IMPLEMENTATION BY	SIZE F	DWG NO. 241-C-4750	H-2-818494 0
FOR WHC DATE	SCALE 1/24	JOB NO. ER4319	SHEET 1 OF 4

NUMBER	TITLE	NUMBER	TITLE
DRAWING TRACEABILITY LIST		NOTE USED ON	

NUMBER	TITLE	NUMBER	TITLE

NO.	REV. DESCRIPTION	BY	REV. BY DATE	KEY APPROVALS
	REVISIONS			

CAD FILE B818494A CAD CODE 2J:1BM;ACD2;12.0;NN UNITS N

2 PLOT SCALE: 1=24 KEHCAD 1

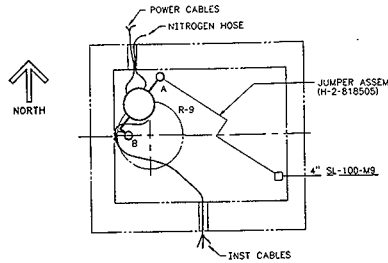

241-C-06A
PUMP PIT
KEY PLAN
SCALE: NONE

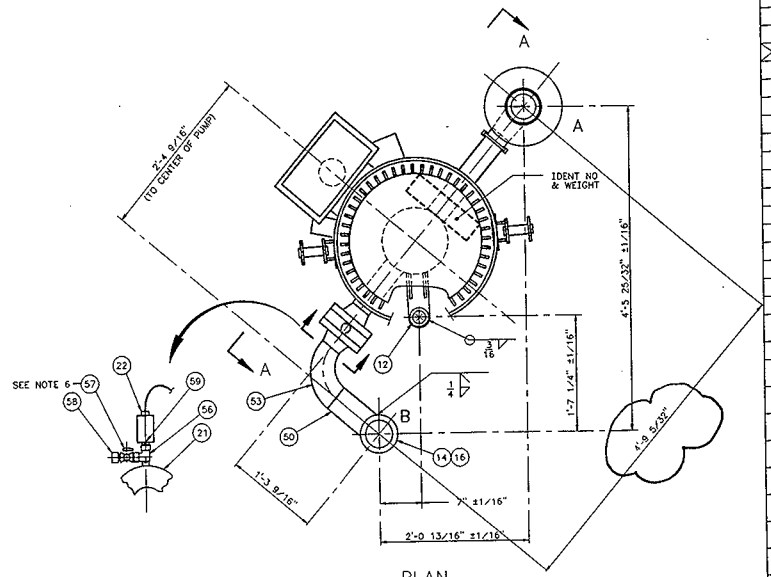

PLAN
(HOSES & WIRES NOT SHOWN FOR CLARITY)

QUANTITY REQUIRED			PART/DASH NUMBER	NOMENCLATURE/DESCRIPTION	MATERIAL/REFERENCE	SHEET	ITEM NO.
			-010	ASSEMBLY			1
		1	-020	LIFTING FRAME SUB-ASSY		2	2
		1	-030	PUMP BASE SUB-ASSY		2	3
							4
							5
	4		-001	PLATE, 3/8" THK	ASTM A 36	3	6
	4		-002	PLATE, 3/8" THK	ASTM A 36	3	7
2			-003	PLATE, 3/8" THK	ASTM A 36	3	8
1			-004	PLATE, 1/2" THK	ASTM A 36	3	9
1			-005	PLATE, 1" THK x 11 5/8" DIA	ASTM A 240 304L		10
1			-006	PLATE, 1" THK	ASTM A 240 304L	3	11
		1	-007	PLATE, 3/8" THK	ASTM A 36	3	12
							13
		1	H-2-32440-2	CONN, VERT 4"			14
		1	H-2-90187-2	NOZZLE, MALE 4"			15
		1	H-2-3997-8	GASKET 4" TYPE III			16
		1	H-2-3194-4	KICK-OFF PL, 4" STD ROUND			17
		1	146-5700	CABLE, 2 TW SH PR #16 AWG W/ OVERALL SHIELD x 25' L	ROCKBESTOS		18
		1	RB350-250	CONDUIT RED BUSHING, 3 1/2" x 2 1/2"	APPLETON ELECTRIC		19
		1	P-1362	PUMP, IN-LINE 3" INLET & 3" OUTLET	PROCUREMENT SPEC W-320-P17		20
		1	PE-1363 SEE NOTE 6 & 9	PRESSURE SENSOR, 3"	RED VALVE CO, INC		21
		1	PE-1363 SEE NOTE 7	PRESSURE TRANSDUCER, (PE) 1/4" NPT	CONSTR SPEC W-320-C5		22
		2	CGB7913	CABLE FITTING, 2 1/2" MNPT x 1.375/1.625 DIA	CROUSE-HINDS		23
		2	XHHW P62-0404	CABLE, 3C, 4/0 AWG W/ GROUND, RATED FOR 90°C, 30' L	ROCKBESTOS FIREWALL III		24
		5	2433C	CABLE, 3C, #16 AWG W/ OVERALL SHIELD x 25' L	ALPHA		25
		3	CGB293	CABLE FITTING, 3/4" MNPT x .250/.375 DIA	CROUSE-HINDS		26
		1	CGB196-SC	CABLE FITTING, 1/2" MNPT x .625/.750 DIA	CROUSE-HINDS		27
		1	RB75-50	REDUCING BUSHING, 3/4" x 1/2"	APPLETON		28
		1	Y1G10404MCC4MC-300	HOSE ASSY 1/4" ID FLEX x 25' L	IMPERIAL EASTMAN		29
		AR	#T50T	CABLE TEFLON SPRIAL WRAPPING x L AS REQD	PANDUIT		30
		AR	PLT2H-L	CABLE TIE, NYLON HVY CROSS SECTION x L AS REQD	PANDUIT		31
		2		GASKET, 3" FLANGE, 1/8" THK	COMPRESSED FIBER GARLOCK BLUE GARD		32

(CONT ON SHEET 2)

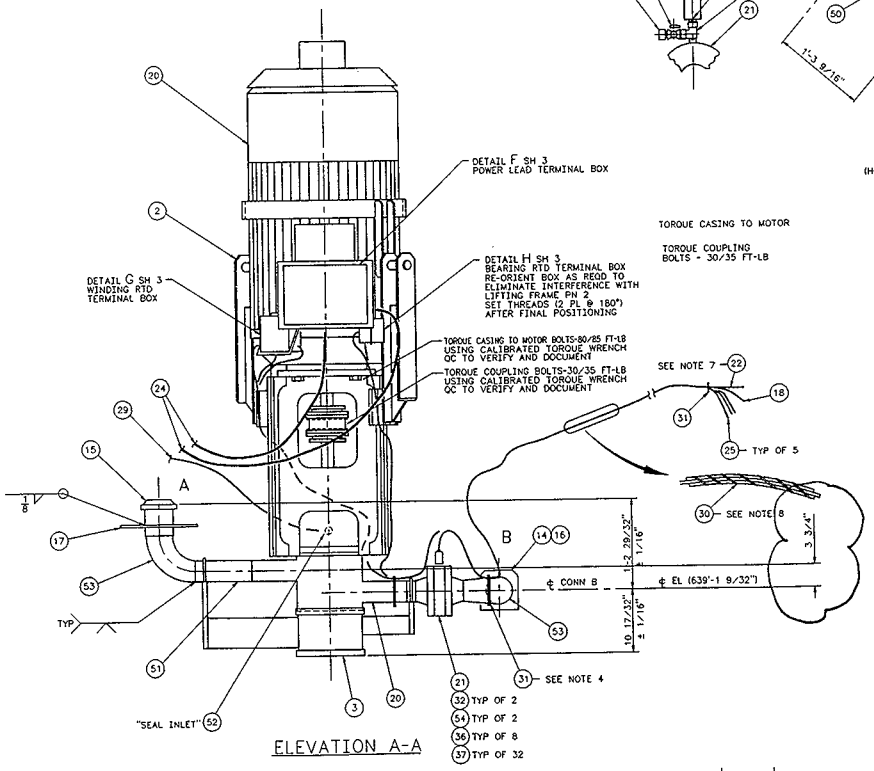

ELEVATION A-A

1 ASSEMBLY
SCALE: 1 1/2"= 1'-0"

NOTES:

1. FABRICATION AND TESTING SHALL BE IN ACCORDANCE WITH HANFORD SPECIFICATION HS-BS-0084, REV B.
2. HYDROSTATIC TEST AT 480 PSIG.
3. JUMPER WEIGHT IS 3750 LB APPROX.
4. ROUTE CABLES APPROXIMATELY AS SHOWN AND SECURE TO SUPPORT STEEL W/PN 31. AVOID IMPACT WRENCH AND LIFTING BAIL AREAS.
5. USE (1) COAT OF AMERLOCK 400 IN PLACE OF AMERCOAT 187 PRIMER AND AMERCOAT 33, WHERE REQUIRED BY JUMPER FABRICATION SPECIFICATION.
6. SEE CONSTRUCTION SPEC W-320-C5, SECTION 13440 FOR FILLING INSTRUCTION AFTER ASSEMBLY. AFTER FILLING, REMOVE HANDLE FROM BALL VALVE (PN 57).
7. TRIM CABLES FURNISHED WITH PN 22 TO 25' LONG PRIOR TO INSTALLATION.
8. TIE EACH END OF TEFLON SPIRAL WRAPPING (PN 30) WITH NYLON CABLE TIES (PN 31).
9. PRESSURE SENSOR (PN 21) SHALL BE SERIES 40, FOR CLASS 300 FLANGES, 316 SST, EPDM SLEEVES, WITH 1/4" NPT PRESSURE TAP. FURNISH WITH 100ML OF SILICONE OIL IN A SEPARATE CONTAINER.

STATE OF WASHINGTON
31138
REGISTERED PROFESSIONAL ENGINEER
EXPIRES 5-24-97

DESIGNED Ba MEYER	SAFETY CLASS 3		CONSTRUCTION
DRN LEAD MONITO J JUPLO			606541
CHECKED C D JONES		U.S. DEPARTMENT OF ENERGY RICHLAND OPERATIONS OFFICE ICF KAISER HANFORD COMPANY	
SAFETY SEE DR/AT FORM		JUMPER ASSEMBLY PUMP PIT C-06A-B-(A)	
CHKR SEE DR/AT FORM			
DWG LEAD SEE DR/AT FORM			
LEAD CHKR C D JONES		PROJECT W-320 TANK 241-C-106 SLUICING	
REVISION NO. 11		SIZE F / BLDG. NO. 241-C / INDEX NO. 8405 / DWG NO. H-2-818508	REV. NO. 1
		SCALE SHOWN / JOB NO. ER4319	SHEET 1 OF 3
2 PLOT SCALE: 1=8	KEHCAD		

H-2-818423	DRAWING LIST		
MARKS	TITLE		
REFERENCED			
NEXT USED ON H-2-818524			

REV NO.	DESCRIPTION	REV DATE	NEW APPROVALS	APPR OR REPL OR FOR RATE
1	GEN DWG REV PER ECN W-320-XXX W-320-439,-414 & -377 REV TO INCORP ECNS	RWS 8/8/96		

REVISIONS

CAD FILE B508AR1 CAD CODE WIN95:ACD2:12.0: UNITS N

APPROVED FOR FABRICATION BY THOMAS, H MAY
ICF WHC DATE 9-12-85

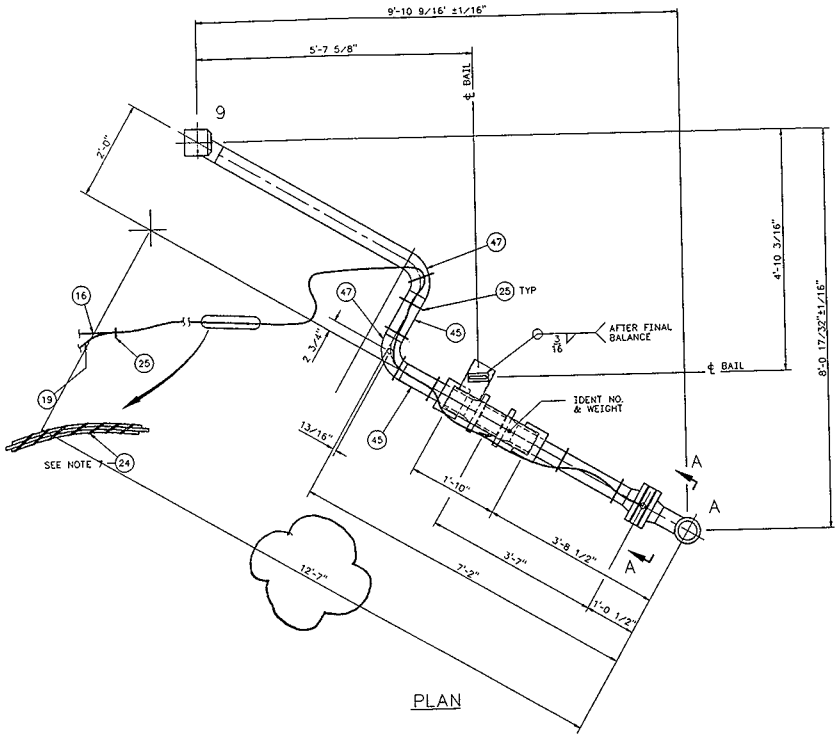

PLAN

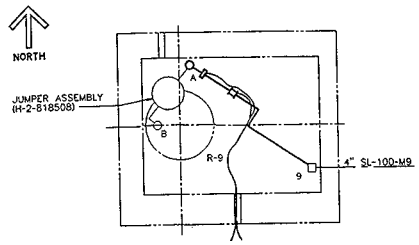

241-C-06A
PUMP PIT
KEY PLAN
SCALE: NONE

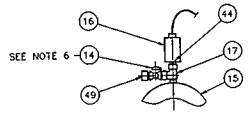

SECTION A-A
SCALE: NONE

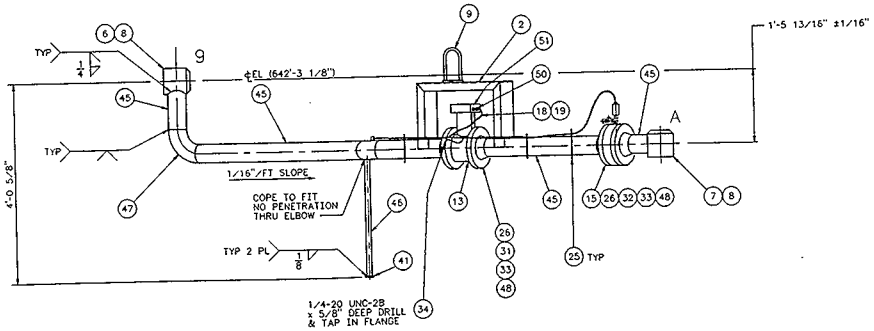

ELEVATION

(1) ASSEMBLY
SCALE: 1"= 1'-0"

PARTS/MATERIAL LIST

QUANTITY REQUIRED		PART/DASH NUMBER	NOMENCLATURE/DESCRIPTION	MATERIAL/REFERENCE	SHEET	ITEM NO.
		-010	ASSEMBLY			1
	1	-020	LIFTING FRAME SUB-ASSY		2	2
						3
						4
						5
	1	H-2-32440-1	CONN, HORIZ 4"			6
	1	H-2-32440-2	CONN, VERT, 4"			7
	2	H-2-3997-8	GASKET 4" TYPE III			8
	1	H-2-90161-15	LIFTING BAIL			9
						10
						11
						12
	1	FE-136"6	FLOWMETER, 4"	CONSTRUCTION SPEC W-320-C5		13
	1	SS-43M4	BALL VALVE 1/4"	WHITEY		14
	1	PE-1362 SEE NOTE 5 & 6	PRESSURE SENSOR, 4"	RED VALVE CO, INC.		15
	1	PE-1362 SEE NOTE 8	PRESSURE TRANSDUCER, (PE) 1/4" NPT	CONSTR SPEC W-320-C5		16
	1	SS-4-ST	STREET TEE, 1/4" NPT	CAJON		17
	1	CGB196-SG	CGB FITTING, 1/2" NPT x .625/.750 DIA	CROUSE-HINDS		18
	1	I46-5700	CABLE, 2 TW SH PR #16 AWG W/OVERALL SHEILD PR x 25' L	ROCKBESTOS		19
						20
						21
						22
						23
	AR	#T50T	CABLE TEFLON SPIRAL WRAPPING x LENGTH AS REQD	PANDUIT		24
	AR	PLT2H-L	CABLE TIE, NYLON HVY CROSS SECTION x L AS REQD	PANDUIT		25
	4		GASKET, 4" FLANGE, 1/8" THK	COMPRESSED FIBER GARLOCK BLUE GARD		26
						27
						28

(CONT ON SHEET 2)

NOTES:

1. FABRICATION AND TESTING SHALL BE IN ACCORDANCE WITH HANFORD SPECIFICATION HS-BS-0084, REV B.
2. HYDROSTATIC TEST AT 480 PSIG.
3. JUMPER WEIGHT IS 675 LB APPROX.
4. ROUTE CABLES APPROXIMATELY AS SHOWN AND SECURE TO SUPPORT STEEL W/PN 25. AVOID IMPACT WRENCH AND LIFTING BAIL AREAS.
5. PRESSURE SENSOR (PN 15) SHALL BE SERIES 40, FOR CLASS 300 FLANGES 316 SST, EPDM SLEEVES WITH 1/4" NPT PRESSURE TAP. FURNISH WITH 100 ML OF SILICONE OIL IN SEPARATE CONTAINER.
6. SEE CONSTRUCTION SPEC W-320-C5, SECTION 13440 FOR FILLING INSTRUCTION AFTER ASSEMBLY. AFTER FILLING, REMOVE HANDLE FROM BALL VALVE (PN 14).
7. TIE EACH END OF TEFLON SPIRAL WRAPPING (PN 24) WITH NYLON CABLE TIES (PN 25).
8. TRIM CABLES FURNISHED WITH PN 16 TO 25' LONG PRIOR TO INSTALLING PN 21.
9. USE (1) COAT OF AMERLOCK 400 IN PLACE OF AMERCOAT 187 PRIMER AND AMERCOAT 33, WHERE REQUIRED BY JUMPER FABRICATION SPECIFICATION.

STATE OF WASHINGTON — JULIAN R. SIMM — REGISTERED PROFESSIONAL ENGINEER
(SP)RES 5-24-97

USE: CONSTRUCTION
EDT: 606541

DESIGNED	Ba MEYER sr	DATE	SAFETY CLASS: 3
DRAWN BY	NEHIIO J JUPLO	5-23-95	
CHECKED	C D JONES	5-23-95	
SAFETY	SEE DR/AT FORM		
SAVER	SEE DR/AT FORM		
DUAL ENGR	SEE DR/AT FORM		
LEAD ENGR	C D JONES	5-23-95	
REVIEW NO.	15	1995	

U.S. DEPARTMENT OF ENERGY
RICHLAND OPERATIONS OFFICE
ICP KAISER HANFORD COMPANY

JUMPER ASSEMBLY
PUMP PIT
C-06A-9-A

PROJECT: W-320 TANK 241-C-106 SLUICING

SIZE	BLDG NO.	FORM NO.	DWG NO.	REV NO.
F	241-C	8405	H-2-818505	1

SCALE: SHOWN | JOB NO. ER4319 | SHEET 1 OF 2

APVD FOR CONSTRUCTION BY: THOMAS H MAY
APVD FOR REVIEW BY: WHC DATE 9-12-95

2 PLOT SCALE: 1=12 | KEHCAD | 1

REV NO.	DESCRIPTION	REV BY DATE	KEH APPROVALS
1	GEN DWG REV PER ECN W-320-XXX, W-320-414, -395 & -179 REV TO INCORP ECNS	RWS 8/1/96	

REVISIONS

NUMBER	TITLE
H-2-818423	DRAWING LIST

DRAWING TRACEABILITY LIST

NEXT USED ON: H-2-818524

CAD FILE: B505AR1 | CAD CODE: WIN95:ACD2:12.0:SS | PRINTS N

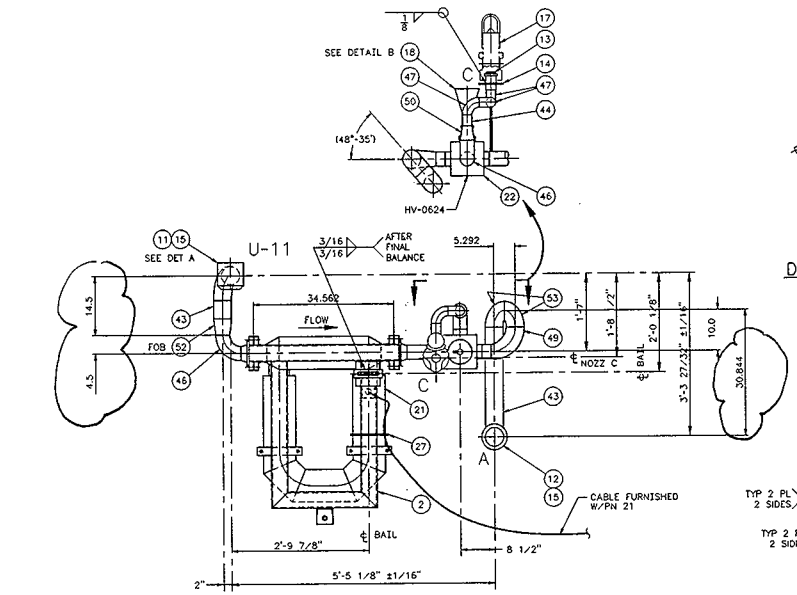

PLAN

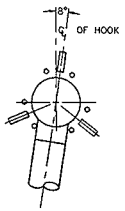

DETAIL A
SCALE: NONE

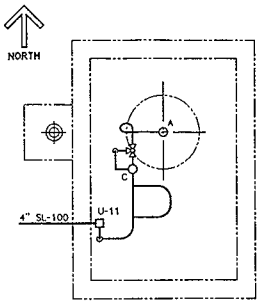

241-AY-02A
PUMP PIT

KEY PLAN
SCALE: NONE

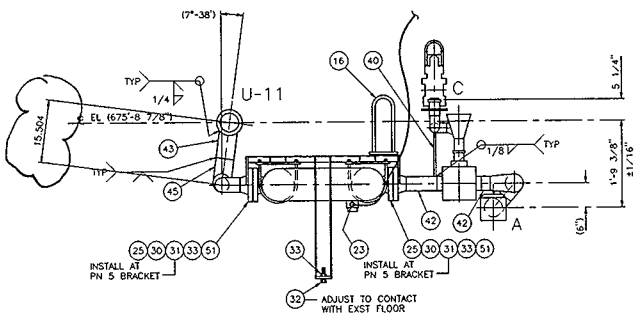

ELEVATION

1 ASSEMBLY
SCALE: 1"= 1'-0"

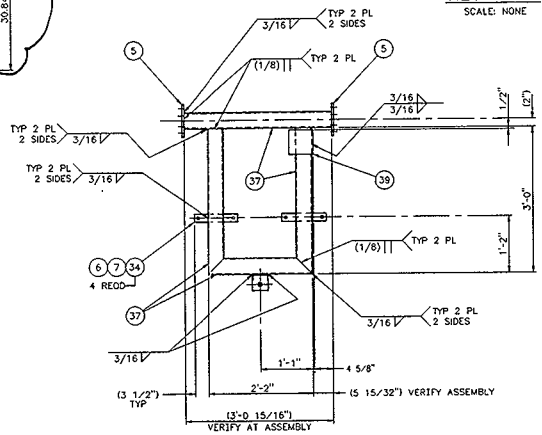

PLAN

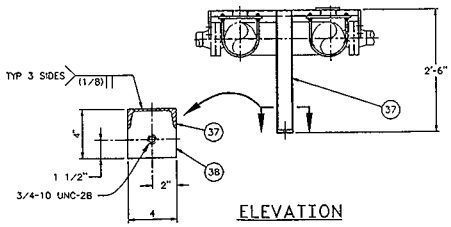

ELEVATION

2 SUPPORT FRAME SUB-ASSY
SCALE: 1"= 1'-0"

PARTS/MATERIAL LIST

QUANTITY REQUIRED		PART/DASH NUMBER	NOMENCLATURE/DESCRIPTION	MATERIAL/REFERENCE	SHEET	ITEM NO.
	X	-010	ASSEMBLY			1
X	1	-020	SUPPORT FRAME SUB-ASSEMBLY		1	2
						3
						4
2		-001	BRACKET, PLATE 1/2" THK	ASTM A 36	2	5
2		-002	BRACKET, PLATE 1/2" THK	ASTM A 36	2	6
2		-003	U-BOLT, BAR ø1/2"	ASTM A 36	2	7
						8
						9
						10
	1	H-2-32440-1	CONN, HORIZ 4"			11
	1	H-2-32440-2	CONN, VERT, 4"			12
	1	H-2-90185-2	NOZZLE, MALE 2"			13
	1	H-2-3194-2	KICKOFF PLATE, 2" ROUND			14
	2	H-2-3997-8	GASKET 4" TYPE III			15
	1	H-2-90161-15	LIFTING BAIL			16
	1	H-2-818509-1	JUMPER FLUSHING BLANK HEAD			17
	1	H-2-90171-5	FUNNEL ASSEMBLY			18
						19
						20
	1	MODEL CMF300M356NU	DENSITY/FLOW/TEMPERATURE SENSOR (UE)	FISHER-ROSEMOUNT MICRO-MOTION		21
	1	HV-0624, SEE NOTE 5	BALL VALVE, 3"-3 WAY	PBM		22
	1	UE-0621	CGB FITTING, 3/4" NPT, W/FLAX PACKING BUSHING & CABLE CLAMP	COMMERICAL		23
						24
	2	BLUE GARD STYLE 3700	GASKET, 3" 300# RAISED FACE, 1/8" THK COMPRESSED FIBER	GARLOCK		25
						26
	AR		CABLE TIE, 18" LG, NYLON	COMMERICAL		27
						28
						29

PARTS/MATERIAL LIST (CONTINUED TO SHEET 2)

NOTE:

1. FABRICATION AND TESTING SHALL BE IN ACCORDANCE WITH HANFORD SPECIFICATION HS-BS-0084, REV B.
2. HYDROSTATIC TEST AT 480 PSIG.
3. JUMPER WEIGHT IS 775 LB APPROX.
4. USE (1) COAT OF AMERLOCK 400 IN PLACE OF AMERCOAT 187 PRIMER AND AMERCOAT 33, WHERE REQUIRED BY JUMPER FABRICATION SPECIFICATION.
5. VALVE SHALL BE 3"-3 WAY PBM MULT-PORT SERIES, T-PORT 180° TURN, FLOW PATTERN #5, 3" SCHED 40 BW END FITTING, SST, #3" MP-H-38-BW-2/P0C0S9 OR APPROVED SUBSTITUTE.

EXPIRES 5-24-97

USE: CONSTRUCTION
CKT: 606537

DESIGNED Bo MEYER 3/7 DISC.
DRAWN DATE C D JONES 6/15
CHECKED ROGER SCHROEDER 6/15
SAFETY SEE DR/AT FORM
SAFETY CLASS 3
SAVED SEE DR/AT FORM
PLOT. DATE SEE DR/AT FORM
LEAD DATE C D JONES 6/15
REVISION NO. 15

U.S. DEPARTMENT OF ENERGY
RICHLAND OPERATIONS OFFICE
ICF KAISER HANFORD COMPANY

JUMPER ASSEMBLY
PUMP PIT
AY-02A-U11-A-(C)

W-320 TANK 241-C-106 SLUICING

PROJECT
SIZE F | PLANT NO. 241-AY | SHEET NO. 8405 | DWG NO. H-2-818501 | REV NO. 2
SCALE SHOWN | JOB NO. ER4319 | SHEET 1 OF 2

APPROVED FOR FABRICATION BY THOMAS H MAY FOR WHC DATE 6-22-95

CAD FILE B818501A | CAD CODE WIN95:ACD2:12.0;SS | PLOT SCALE: 1=12 | KEHCAD

REV NO.	DESCRIPTION	REV BY DATE	KEH APPROVALS
2	GEN DWG REV PER ECN W-320-567		
RS 1	REV TO INCORP ECN W-320-401	N.J.J. 12-20-97	WC 5-30-97 SCH 5-30-97 12-20-97

NUMBER	TITLE
H-2-818423	DRAWING LIST
NEXT USED ON H-2-818544	

DRAWING TRACEABILITY LIST

HNF-2477, Rev. 0
Page B-175

PARTS/MATERIAL LIST (CONTINUED FROM SHEET 1)

QUANTITY REQUIRED		PART/DASH NUMBER	NOMENCLATURE/DESCRIPTION	MATERIAL/REFERENCE	SHEET	ITEM NO.
			(CONT FROM SHEET 1)			
	X		ASSEMBLY		1	1
X	1		SUPPORT FRAME SUB-ASSEMBLY		1	2
	8		STUD BOLT, 3/4"-10UNC-2A x 6" LG	ASTM A 193 GR B8 304		30
	8		STUD BOLT, 3/4"-10UNC-2A x 6 1/2" LG	ASTM A 193 GR B8 304		31
1			MACHING SCREW, 3/4"-10UNC-2A x 3" L HEX HD	ANSI B18.2.1 CS		32
1	64		HEAVY HEX NUT, 3/4"-10UNC-2B	ASTM A 194 GR 8F 303		33
	4		HEX NUT, 1/2"-13UNC-2B	ANSI B18.2.2 CS		34
						35
						36
AR			CHANNEL, C4 x 5.4	ASTM A 36		37
AR			PLATE, 1/2"	ASTM A 36		38
1			PLATE 1/2" x 6" x 6"	ASTM A 36		39
	AR		BAR 1/2" DIA	ASTM A 36		40
						41
						42
	AR		PIPE, 4" SCHED 40S	ASTM A 312 GR TP 304L		43
	AR		PIPE, 2" SCHED 40S	ASTM A 312 GR TP 304L		44
	1		ELBOW, 90° LR 4" SCHED 40S BW	ASTM A 403 WP-S 304L		45
	2		ELBOW, 90° LR 3" SCHED 40S BW	ASTM A 403 WP-S 304L		46
	3		ELBOW, 90° LR 2" SCHED 40S BW	ASTM A 403 WP-S 304L		47
	1		ELBOW, 45° 4" SCHED 40S BW	ASTM A 403 WP-S 304L		48
	1		RDCR ELBOW, 90° LR 4" x 3" SCHED 40S BW	ASTM A 403 WP-S 304L		49
	1		CONC RDCR 3" x 2" SCHED 40S BW	ASTM A 403 WP-S 304L		50
	2		FLANGE, 3" 300# RF WELD NECK	ASTM A 182 GR F 304L		51
	1		ECC RDCR, 4" x 3" SCHED 40S BW	ASTM A 403 WP-S 304L		52
	2		ELBOW, 90° SR 4" SCHED 40S BW	ASTM A 403 WP-S 304L		53

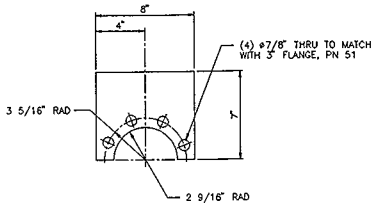

5 BRACKET
SCALE: 3"= 1'-0"

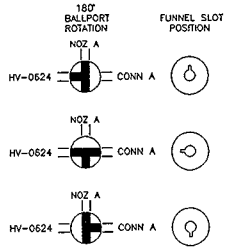

DETAIL B
SCALE: NONE

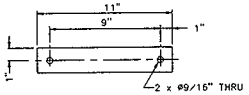

6 BRACKET
SCALE: 3"= 1'-0"

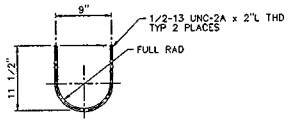

7 U-BOLT
SCALE: 1 1/2"= 1'-0"

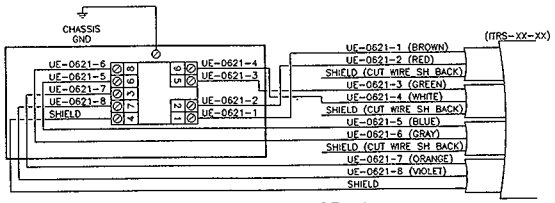

WIRING CONNECTION DIAGRAM
UE-0621

EXPIRES 5-24-97

DWG NO	TITLE	REF NUMBER	TITLE
DRAWING TRACEABILITY LIST		NEXT USED ON	REFERENCES

REVISIONS

CADFILE B501B CADCODE WIN95:ACD2:12.0:SS

2 PLOT SCALE: 1=12

DRAWN BY	BA MEYER sr
DESIGN ENGR	
CHECKED	
SAFETY	SEE DR/AT FORM
ENVIR	SEE DR/AT FORM
QUALITY	SEE DR/AT FORM
LEAD ENGR	
SUPERVISOR	
COMPANY	
APVD	
APVD	

USE CONSTRUCTION
SAFETY CLASS 3 REVIEW NO. 2 DATE 02/18/97

U.S. DEPARTMENT OF ENERGY
Richland Operations Office
FLUOR DANIEL NORTHWEST, INC

JUMPER ASSEMBLY
PUMP PIT
AY-02A-U11-A-(C)

PROJECT W-320 TANK 241-C-106 SLUICING
BLDG NO 241-AY PROJ NO 8405 DWG NO H-2-818501 REV 0
SCALE SHOWN DWG 606537 SHEET 2 OF 2

DWG NO H-2-818501 SH 2 OF 2 REV 0

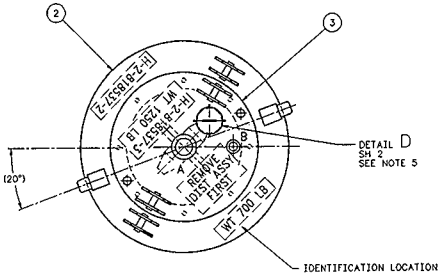

PLAN

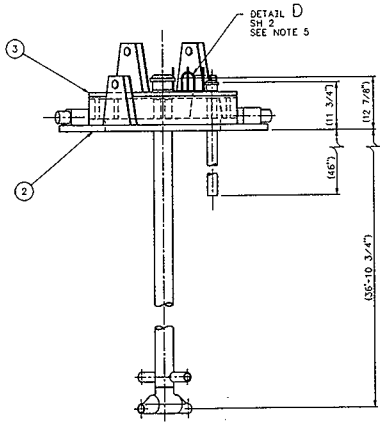

ELEVATION

1 DISTRIBUTOR ASSEMBLY
SCALE: 1"= 1'-0"
(FOR INSTALLED ORIENTATION SEE H-2-818544)

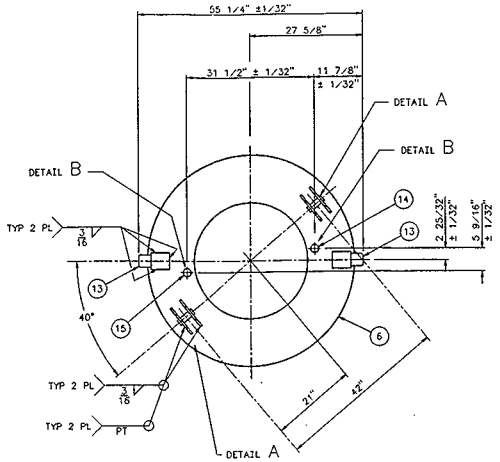

2 ADAPTER FLG SUB-ASSY
SCALE: 1"= 1'-0"

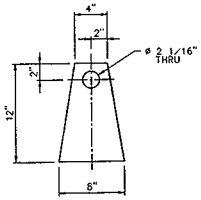

5 PLATE
SCALE: 2"=1'-0"

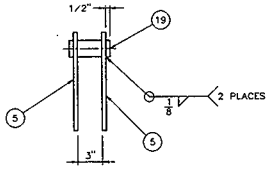

DETAIL A
SCALE: 2"=1'-0"

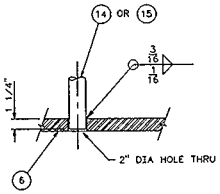

DETAIL B
SCALE: 2"=1'-0"

PARTS/MATERIAL LIST

QTY REQD	QTY REQD	QTY REQD	PART/DASH NUMBER	NOMENCLATURE/DESCRIPTION	MATERIAL/REFERENCE	SHEET	ITEM NO.
		X	-010	DISTRIBUTOR ASSEMBLY			1
	X	1	-020	ADAPTER FLG SUB-ASSY			2
X		1	-030	DIST HEAD SUB-ASSY			3
							4
4	4		-001	PLATE, 1/2" THK	ASTM A 36		5
	1		-002	PLATE, 1 1/2" THK x 51" OD x 28" ID	ASTM A 240 TYPE 304L		6
1			-003	PLATE, 1 1/2" THK x 36" OD x 28" ID	ASTM A 240 TYPE 304L		7
1			-004	PLATE, 1 1/2" THK x 36" DIA	ASTM A 240 TYPE 304L		8
							9
							10
1			H-2-90187-3	NOZZLE, MALE CONN 4" SCHED 80			11
1			H-2-90185-2	NOZZLE, MALE CONN 2"			12
	2		H-2-64426-1	TRUNNION			13
	1		H-2-57331-1	DOWEL, LONG	SEE NOTE 3		14
	1		H-2-57331-2	DOWEL, SHORT	SEE NOTE 3		15
							16
							17
8				BAR, 1" DIA x 5" LG	ASTM A 276 TYPE 304L		18
2	2			BAR, 2" DIA x 5" LG	ASTM A 36		19
4				BAR, 3/8" DIA x 6" LG	ASTM A 276 TYPE 304L		20
							21
AR				PIPE, 4" SCHED 80S	ASTM A 312 GR TP 304L		22
AR				PIPE, 2" SCHED 40S	ASTM A 312 GR TP 304L		23
2				PIPE, 2" SCHED 80S x 6" LG	ASTM A 312 GR TP 304L		24
1				TEE, 4" SCHED 80S BW	ASTM A 403 WP-S 304L		25
2				RDCR, 4"x 2" ECC SCHED 80S BW	ASTM A 403 WP-S 304L		26
AR				SHEET, 11 GA x 7" WIDE	ASTM A 240 TYPE 304L		27
							28
		AR		BAR, 3/8" DIA	ASTM A 276 TYPE 304L		29
		1		PLATE, 1/4" THK x 6 1/2" DIA	ASTM A 240 TYPE 304L		30
		AR		PLATE, 1/4" THK x 3" WIDE	ASTM A 240 TYPE 304L		31

NOTES:

1. FABRICATION AND TESTING SHALL BE IN ACCORDANCE WITH HANFORD SPECIFICATION HS-BS-0084, REV B.
2. HYDROSTATIC TEST AT 480 PSIG.
3. MATERIAL FOR PARTS 14 AND 15 SHALL BE ASTM-A276-304L. HEAT TREATING PER DRAWING H-2-57331 IS NOT REQUIRED.
4. USE (1) COAT OF AMERLOCK 400 IN PLACE OF AMERCOAT 187 PRIMER AND AMERCOAT 33, WHERE REQUIRED BY JUMPER FABRICATION SPECIFICATION.
5. DRAIN CLOSURE PLUG WILL ONLY BE INSTALLED AS SHOWN WHEN COVER BLOCK IS NOT IN PLACE OVER PIT. DRAIN CLOSURE PLUG MUST BE REMOVED FOR NORMAL OPERATION, WHEN CLOVER BLOCKS ARE IN PLACE.

STATE OF WASHINGTON — STEPHEN D. JONES — 11633 — REGISTERED PROFESSIONAL ENGINEER

(XP)BKS 5-3-95

DESIGNED Ba MEYER sr	SAFETY CLASS 3	USE CONSTRUCTION	
DRAWN CHKR C D JONES		CDT 606537	
CHECKED ROGER SCHROEDER	U.S. DEPARTMENT OF ENERGY RICHLAND OPERATIONS OFFICE ICF KAISER HANFORD COMPANY		
SAFETY SEE DR/AT FORM			
CNTR SEE DR/AT FORM	PIPING DISTRIBUTOR ASSEMBLY PLANS, ELEVATION & DETAILS		
DWG CHANGE SEE DR/AT FORM			
LEAD CHKR C D JONES			
REVISION NO. 11	PROJECT W-320 TANK 241-C-106 SLUICING		
APPROVED FOR INCORPORATION BY THOMAS H MAY FOR WHC DATE 8-22-95	SIZE F / FCSN NO. 241-AY / DWG NO. 8405	DWG NO. B537AR1	REV NO. 1
	SCALE SHOWN	JOB NO. ER4319	SHEET 1 OF 2

NUMBER	TITLE	NUMBER	TITLE
DRAWING TRACEABILITY LIST		H-2-818423 SH 6	DRAWING LIST
		REFERENCES	
		NOT USED ON	

REV NO.	DESCRIPTION	REV BY DATE	KEN APPROVALS
1	GEN DWG REV PER ECN W-320-XXX W-320-576, -394 & -169 REV TO INCORP ECNS	RWS 2/17 /97	

REVISIONS

CAD FILE B537AR1 CAD CODE WIN95:ACD2:12.0:SS SHEET N

2 PLOT SCALE: 1=12 KEHCAD 1

HNF-2477, Rev. 0
Page B-177

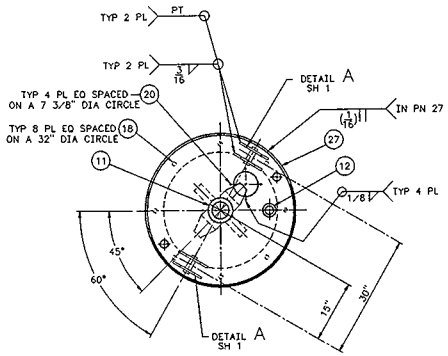

PLAN

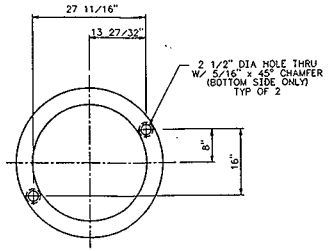

7 PLATE

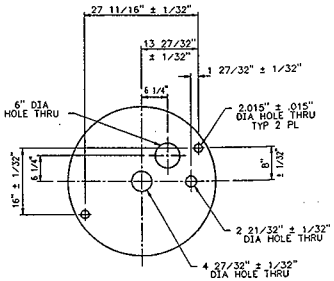

8 PLATE

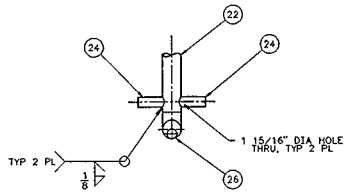

ELEVATION

DETAIL C

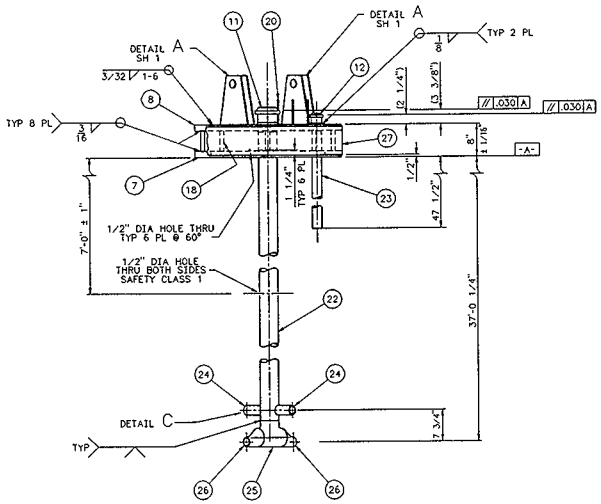

ELEVATION

3 DIST HEAD SUB-ASSY

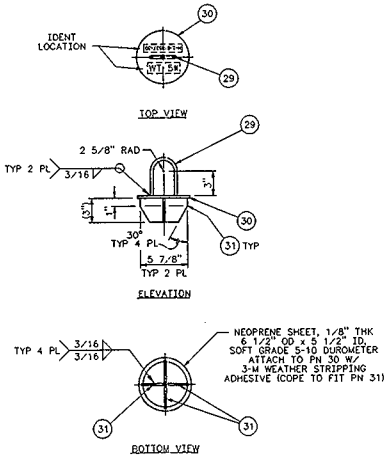

DETAIL D

SCALE: 2"=1'-0"

NOTES:

1. FOR NOTES, SEE SHEET 1.

HNF-2477, Rev. 0
Page B-178

REV NO.	DESCRIPTION	REV BY DATE	KEY APPROVALS
1	GEN DWG REV PER ECN W-320-XXX W-320-576, -394, -391, & -179 REV TO INCORP ECNS	RWS 2/17/97	

REVISIONS

DWG TITLE B537BR1 DWG CODE WIN95:ACD2:12.0.SS SHEET N

NUMBER | TITLE | NUMBER | TITLE | NOTES/REFS

DRAWING TRACEABILITY LIST | NEXT USED ON

LEAD FOR PUR-CHASE FOR DATE

APPROVAL FOR SUBMITTAL BY THOMAS H. MAY FOR WHC DATE 8-22-95

EXPIRES 5-3-96

USE	CONSTRUCTION		
DESIGNED Ba MEYER Sr	ROL	SAFETY CLASS 3	KEY 606537
DRAW CHKR C D JONES		U.S. DEPARTMENT OF ENERGY RICHLAND OPERATIONS OFFICE ICF KAISER HANFORD COMPANY	
CHECKED ROGER SCHROEDER			
SAFETY SEE DR/AT FORM		PIPING DISTRIBUTOR ASSEMBLY PLAN, ELEVATION & DETAILS	
DWR SEE DR/AT FORM			
DWG CHKR SEE DR/AT FORM			
LEAD ENGR C D JONES			
REVIEW NO. 9		PROJECT W-320 TANK 241-C-106 SLUICING	
SIZE F	SCALE 1"=1'-0"	SHEET NO. 241-AY 8405	DWG NO. B537BR1 REV NO. 1
JOB NO. ER4319	SHEET 2 OF 2		

2 PLOT SCALE: 1=12 | KEHCAD | 1 | REV. 0330.00 ECO-940 STRTAZW1 18HOQ0.0MOD

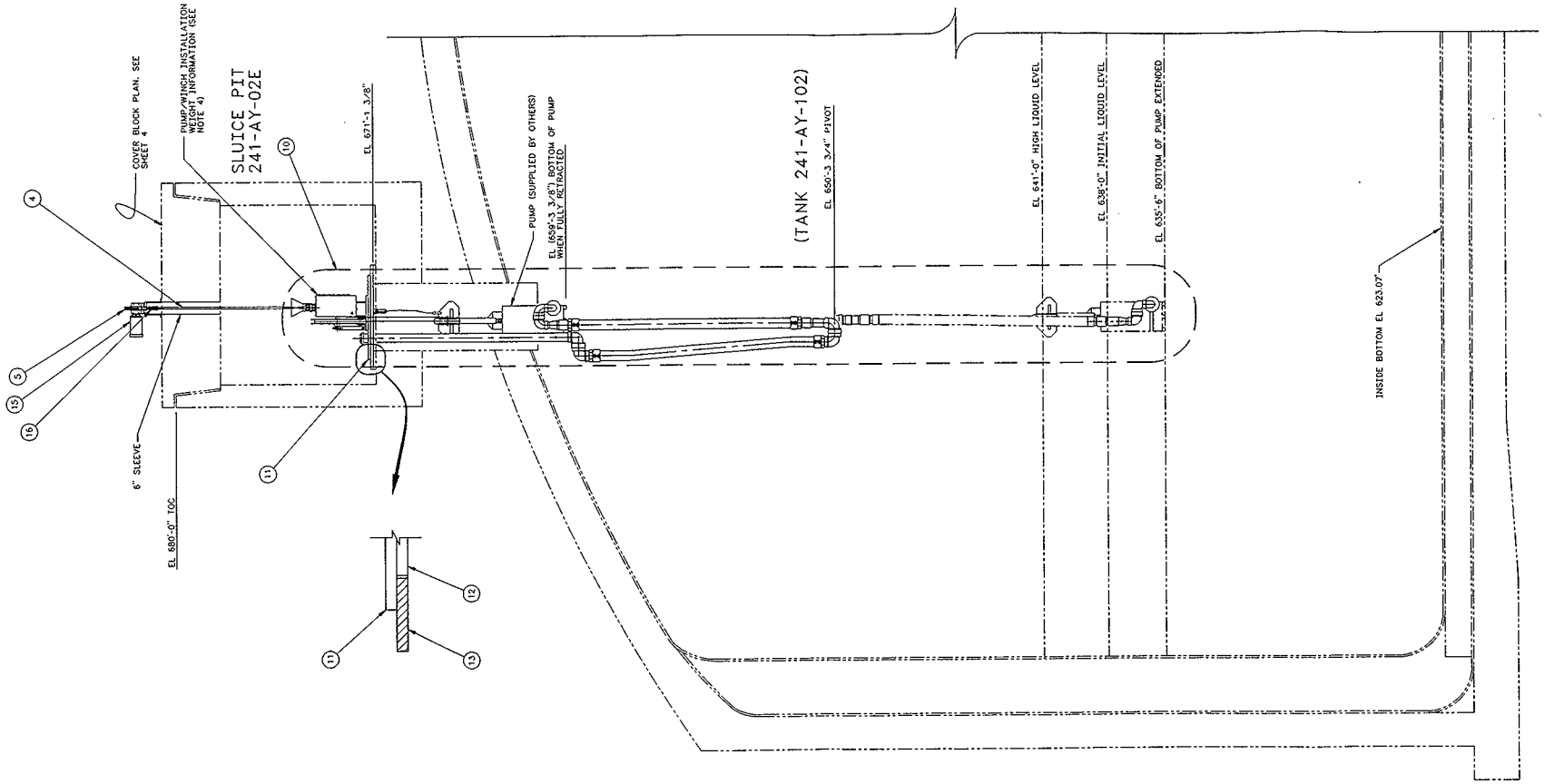

2 INSTALLATION-AY TANK
LOOKING NORTH
PUMP ASSEMBLY ROTATED 82° CCW FOR CLARITY

HNF-2477, Rev. 0
Page B-179

COPIES 3-3-96		USE	CONSTRUCTION
DESIGNED JR BYERS	DATE	SAFETY CLASS 3	ICN 610535
DRAWN CADD		U.S. DEPARTMENT OF ENERGY RICHLAND OPERATIONS OFFICE ICP KAISER HANFORD COMPANY	
CHECKED			
SAFETY SEE DR/AT FORM		PIPING	
ENVIR SEE DR/AT FORM		PUMP & WINCH INSTALL-AY TK	
DWG ENGR SEE DR/AT FORM			
CAD ENGR			
REVIEW NO. 6	06/24/1996	PROJECT W-320 TANK 241-C-106 SLUICING	
APPROVED FOR INFORMATION BY WHC	DATE	SIZE F / SYM. NO. 241-C / INDEX NO. 4750 / DWG NO. H-2-818494	REV NO. 0
		SCALE 1/24 / JOB NO. ER4319	SHEET 2 OF 4

NUMBER	TITLE	NUMBER	TITLE
DRAWING TRACEABILITY LIST		REFERENCES	

NO	REV NO.	DESCRIPTION	REV BY DATE	KCH APPROVALS	APVD FOR PUBLICAT.	APVD FOR CONSTR. DATE
		REVISIONS				

CAD FILE 8818494B | CAD DWG 2J:IBM:ACD2:12.0:NN | SHEETS N

2 PLOT SCALE: 1=24 | KEHCAD | 1

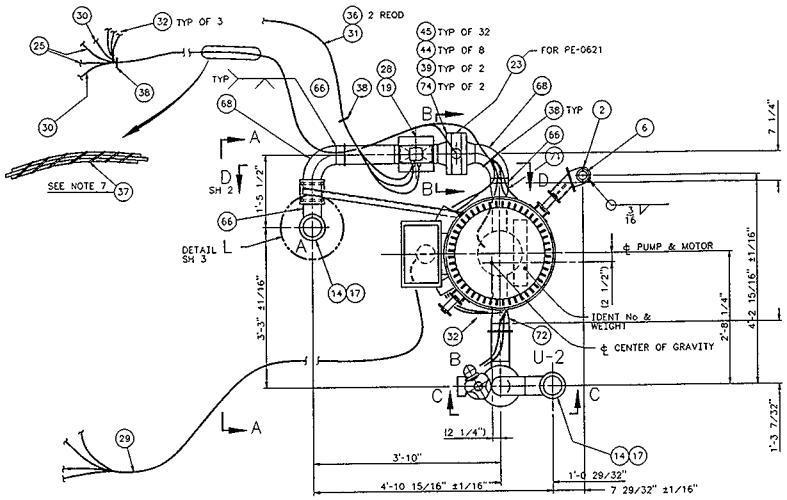

PLAN

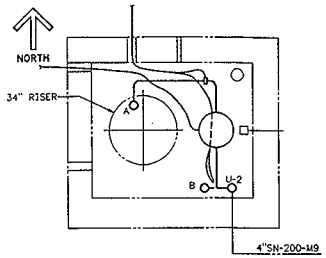

241-AY-02E
SLUICE PIT
KEY PLAN
SCALE: NONE

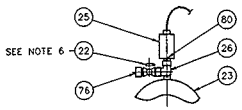

SECTION B-B
SCALE: NONE

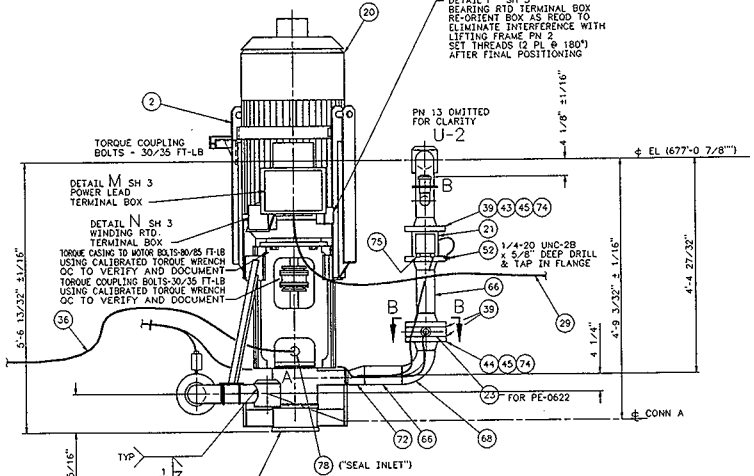

VIEW A-A

1 ASSEMBLY
SCALE: 1"= 1'-0"

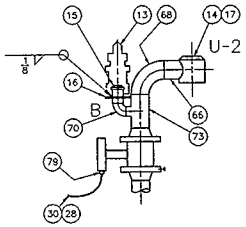

VIEW C-C
SCALE: NONE

PARTS/MATERIAL LIST

QUANTITY REQUIRED			PART/DASH NUMBER	NOMENCLATURE/DESCRIPTION	MATERIAL/REFERENCE	SHEET	ITEM NO.
			-010	ASSEMBLY			1
		1	-020	LIFTING FRAME SUB-ASSY		2	2
		1	-030	PUMP BASE SUB-ASSY		2	3
							4
	1		-001	PLATE, 3/8" THK	ASTM A 36	3	5
		1	-002	PLATE, 3/8" THK	ASTM A 36	3	6
	1		-003	PLATE, 3/8" THK	ASTM A 36	3	7
	4		-004	PLATE, 3/8" THK	ASTM A 36	3	8
1			-005	PLATE, 1" THK	ASTM A 240 304L	3	9
1			-006	PLATE, 1" THK x 11 5/8" DIA	ASTM A 240 304L		10
							11
							12
		1	H-2-818509-1	JUMPER FLUSH BLANK HEAD			13
		2	H-2-32440-2	CONN, VERT, 4"			14
		1	H-2-90185-2	NOZZLE, MALE, 2"			15
		1	H-2-3194-6	KICKOFF PLATE, 2" ROUND			16
		2	H-2-3997-8	GASKET 4" TYPE III			17
							18
							19
		1	P-0622	PUMP, IN-LINE 3" INLET & 3" OUTLET	PROCUREMENT SPEC W-320-P17		20
		1	FE-0621	FLOWMETER, 4"	CONSTRUCTION SPEC W-320-C7		21
		2	SS-43M4	BALL VALVE 1/4"	WHITEY		22
		2	PE-0621 & PE-0622 SEE NOTE 5 & 6	PRESSURE SENSOR, 4"	RED VALVE CO, INC.		23
		1	RB350-250	CONDUIT RED BUSHING, 3 1/2" x 2 1/2"	APPLETON ELECTRIC		24
		2	PE-0621 & PE-0622 SEE NOTE 8	PRESSURE TRANSDUCER, (PE) 1/4" NPT	CONSTR SPEC W-320-C7		25
		2	SS-4-ST	STREET TEE, 1/4" NPT	CAJON		26
		1	CGFP7917	CORD CONNECTOR, 2 1/2"	CROUSE-HINDS		27
		2	CGB196-SG	CGB FITTING, 1/2" NPT, x .625/.750 DIA	CROUSE-HINDS		28
		1	XHHW P62-0504	CABLE, 3C-500 KCM W/ GROUND, RATED FOR 90°C x 30' L	ROCKBESTOS FIREWALL III		29
		2	I46-5700	CABLE, 2 TW SH PR #16 AWG W/ OVERALL SHIELD PR x 25' L	ROCKBESTOS		30
							31
		3	I46-0031	CABLE, 3C #16 AWG W/ OVERALL SHIELD x 25' L	ROCKBESTOS		32
		3	CGB293	CGB FITTING, 3/4" NPT x .250/.375 DIA	CROUSE-HINDS		33
		1	RB75-50	REDUCING BUSHING, 3/4" x 1/2"	APPLETON		34
							35
		1	Y1GT0404MC04MC-300	HOSE ASSY 1/4" ID FLEX x 25' L	IMPERIAL EASTMAN		36

(CONT ON SHEET 2)

NOTES:

1. FABRICATION AND TESTING SHALL BE IN ACCORDANCE WITH HANFORD SPECIFICATION HS-BS-0084, REV B.
2. HYDROSTATIC TEST AT 480 PSIG.
3. JUMPER WEIGHT IS 4170 LB APPROX.
4. ROUTE CABLES APPROXIMATELY AS SHOWN AND SECURE TO SUPPORT STEEL W/PN 38. AVOID IMPACT WRENCH AND LIFTING BAIL AREAS.
5. PRESSURE SENSOR (PN 23) SHALL BE SERIES 40, FOR CLASS 300 FLANGES 316 SST, EPDM SLEEVES WITH 1/4" NPT PRESSURE TAP. FURNISH WITH 100 ML OF SILICONE OIL IN SEPARATE CONTAINER.
6. SEE CONSTRUCTION SPEC W-320-C7, SECTION 13440 FOR FILLING INSTRUCTION AFTER ASSEMBLY. AFTER FILLING, REMOVE HANDLE FROM BALL VALVE (PN 22).
7. TIE EACH END OF TEFLON SPIRAL WRAPPING (PN 37) WITH NYLON CABLE TIES (PN 38).
8. TRIM CABLES FURNISHED WITH PN 25 TO 25' LONG PRIOR TO INSTALLATION.
9. USE (1) COAT OF AMERLOCK 400 IN PLACE OF AMERCOAT 187 PRIMER AND AMERCOAT 33, WHERE REQUIRED BY JUMPER FABRICATION SPECIFICATION.

EXPIRES 9-3-98

USE	CONSTRUCTION		
DESIGNED Ba MEYER sr	DATE	SAFETY CLASS 3	EDP 606537
DRAW CHKR C D JONES	8-18-95	U.S. DEPARTMENT OF ENERGY RICHLAND OPERATIONS OFFICE ICF KAISER HANFORD COMPANY	
CHECKED ROGER SCHROEDER	8-18-95		
SAFETY SEE DR/AT FORM		JUMPER ASSEMBLY SLUICE PIT AY-02E-U2-A-(B)	
CHKR SEE DR/AT FORM			
DUAL CHKR SEE DR/AT FORM			
LEAD CHKR C D JONES	8-18-95	PROJECT W-320 TANK 241-C-106 SLUICING	
APVD FOR REVIEW NO. 18		SIZE F / BLDG NO. 241-AY / INDEX NO. 8405 / DWG NO. B503AR1	REV NO. 1
APVD FOR TURNOVER OR QA		SCALE SHOWN / JOB NO. ER4319	SHEET 1 OF 3
APPROVED FOR CONSTRUCTION BY THOMAS H MAY FOR WHC DATE 8-22-95			

REV NO.	DESCRIPTION	REV BY DATE	SEN APPROVALS
1	GEN DWG REV PER ECN W-320-XXX W-320-439,-414 & -380 REV TO INCORP ECNS	RWS 6/7/96	

REVISIONS

CAD FILE B503AR1 CAD CODE WIN95:ACD2:12.0:SS UNITS IN

NUMBER	TITLE	NUMBER	TITLE
		H-2-818423 SH 6	DRAWING LIST

DRAWING TRACEABILITY LIST

NOT USED ON H-2-818545

REFERENCES

2 PLOT SCALE: 1=12 KEHCAD

STATELAY: 1996AD2S.DWG

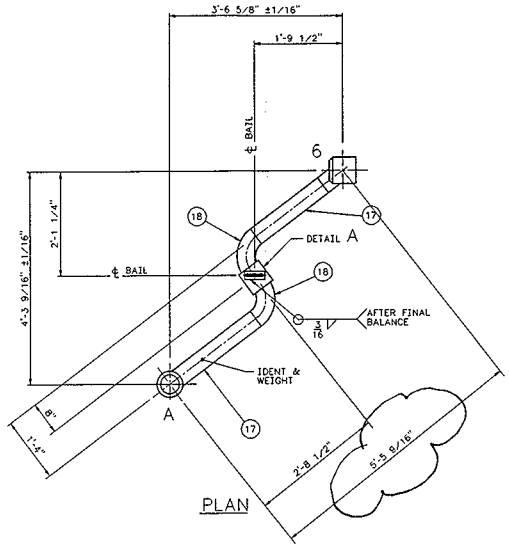

PLAN

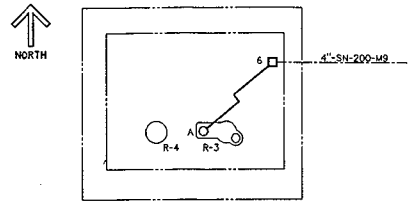

241-C-06C
SLUICE PIT
KEY PLAN
SCALE: NONE

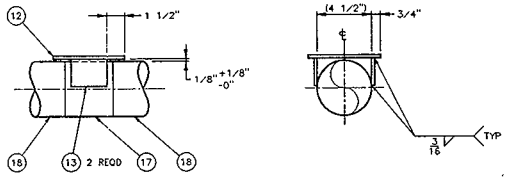

DETAIL A
SCALE: 3"= 1'-0"

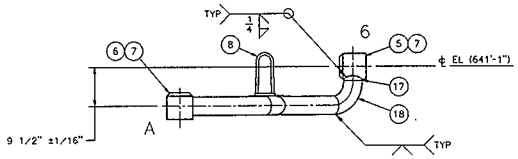

ELEVATION

1 ASSEMBLY
SCALE: 1"= 1'-0"

QTY REQD	PART/DASH NUMBER	NOMENCLATURE/DESCRIPTION	MATERIAL/REFERENCE	SHEET	ITEM NO.
X	-010	ASSEMBLY			1
					2
					3
					4
1	H-2-32440-1	CONN, HORIZ 4"			5
1	H-2-32440-2	CONN, VERT, 4"			6
2	H-2-3997-8	GASKET 4" TYPE III			7
1	H-2-90161-3	LIFTING BAIL			8
					9
					10
					11
1		PLATE 1/4" THK x 6" x 6"	ASTM A 36		12
2		BAR 1/4" THK x 2 1/4" x 3"	ASTM A 240 304L		13
					14
					15
					16
AR		PIPE, 4" SCHED 40S	ASTM A 312 GR TP 304L		17
3		ELBOW, 90° LR 4" SCHED 40S BW	ASTM A 403 WP-S 304L		18
					19
					20

NOTE:

1. FABRICATION AND TESTING SHALL BE IN ACCORDANCE WITH HANFORD SPECIFICATION HS-BS-0084 REV B.
2. HYDROSTATIC TEST AT 480 PSIG.
3. JUMPER WEIGHT IS 325 LB APPROX.
4. USE (1) COAT OF AMERLOCK 400 IN PLACE OF AMERCOAT 187 PRIMER AND AMERCOAT 33, WHERE REQUIRED BY JUMPER FABRICATION SPECIFICATION.

EXPIRES 3-3-96

USE: CONSTRUCTION

DESIGNED Ba MEYER SR DATE | SAFETY CLASS 3 | QA

U.S. DEPARTMENT OF ENERGY
RICHLAND OPERATIONS OFFICE
ICP KAISER HANFORD COMPANY

JUMPER ASSEMBLY
SLUICE PIT
C-06C-6-A

SAFETY SEE DR/AT FORM
DANGER SEE DR/AT FORM
CONT. DANGER SEE DR/AT FORM

REVISION NO. 3 | 1-3-95

PROJECT W-320 TANK 241-C-106 SLUICING

SIZE F | FSCM NO. 241-C | SHEET NO. 8405 | DWG NO. B515A | REV NO. 0

SCALE SHOWN | JOB NO. ER4319 | SHEET 1 OF 1

NUMBER	TITLE
DRAWING TRACEABILITY LIST	

H-2-818423 SH 7 DRAWING LIST

NEXT USED ON H-2-818526

REV NO.	DESCRIPTION	REV DATE	KEN APPROVALS
	REVISIONS		

CAD FILE B515A | CAD CODE 2B.IBM:ACD2:12.0:NN | MKS N

APPROVED FOR IMPLEMENTATION BY WHC DATE

PLOT SCALE: 1=12 | KEHCAD

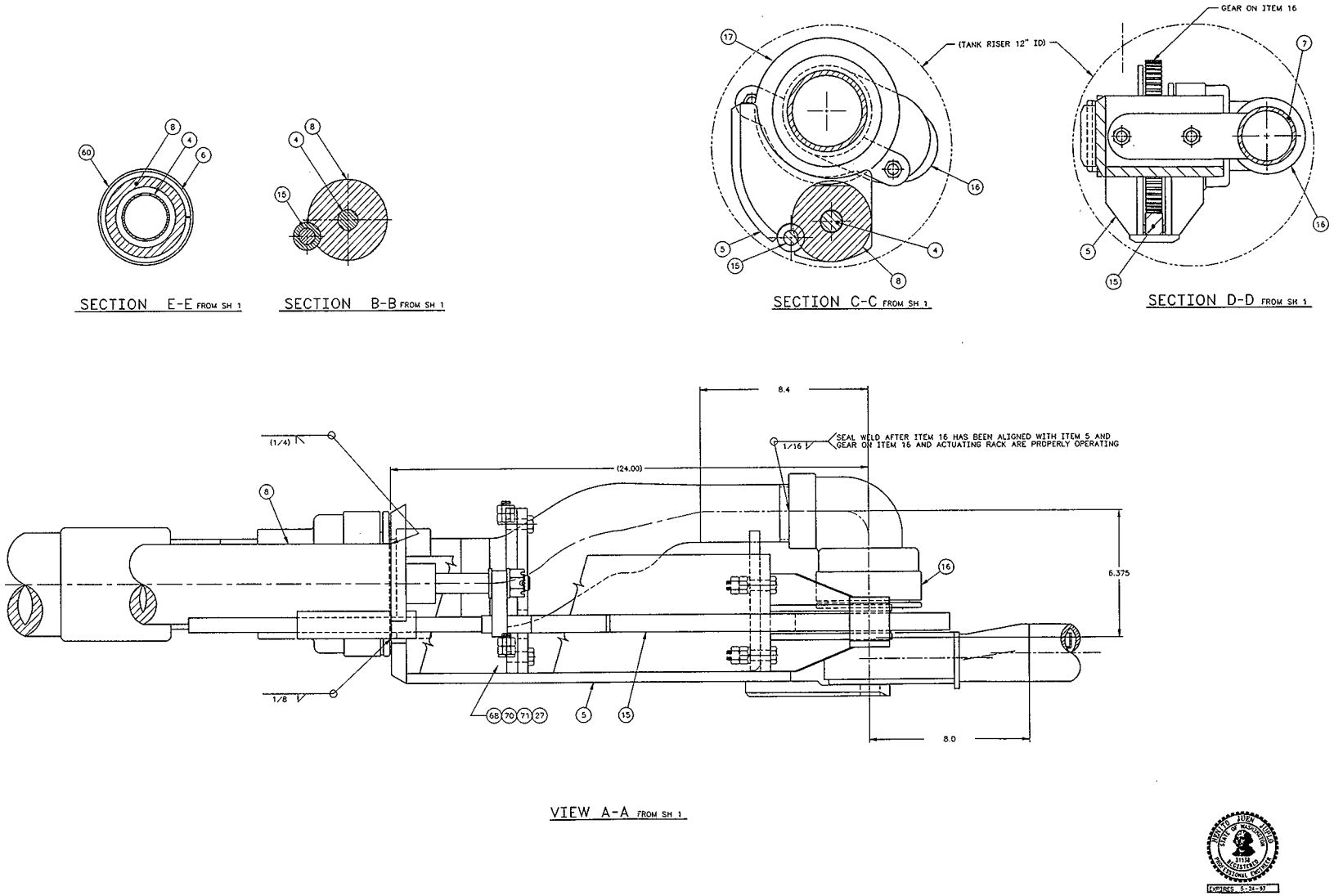

DIMENSIONING AND TOLERANCING SHALL BE INTERPRETED PER ANSI Y14.5M-1982
DIMENSIONS ARE IN INCHES UNLESS OTHERWISE SPECIFIED
UNSPECIFIED TOLERANCES SHALL BE:
DECIMAL .X ± .1 .XX ± .03 .XXX ± .010
ANGULAR ± 2°
ALL IMPLIED 90° ANGLES SHALL BE PERPENDICULAR WITHIN THE GREATEST TOLERANCE OF THE LINEAR DIMENSIONS
ALL COAXIAL FEATURES SHALL BE CONCENTRIC WITHIN .032 DIAMETER, UNLESS OTHERWISE SPECIFIED.

REV NO.	DESCRIPTION	REV DATE	MGR APPROVALS	APVD FOR IMPLEMENT PER DATE
1	GEN DWG REV PER ECN W-320-XXX W-320-445 AND -236 REV TO INCORP ECNS	RWS 8/10 /96		

REVISIONS

CAD TITLE B551BR1 CAD CODE WIN95:ACD2:11.0:SS UNITS N

APPROVED FOR IMPLEMENTATION BY E G ALLEN FOR WHC DATE 7-21-95

DRAWING TRACEABILITY LIST: NUMBER | TITLE

NEXT USED ON: NUMBER | TITLE | REFERENCES

DESIGNED M. TELANDER DATE
DRAW CHKR NEMITO J JUPLO 7-21-95
DESIGN CHKR C D JONES 7-21-95
SAFETY SEE DR/AT FORM
DWG TYP SEE DR/AT FORM
DWG CHKR SEE DR/AT FORM
LEAD CHKR C D JONES 7-21-95
REVISION NO. 26 7-21-95

SAFETY CLASS 3
WBS CONSTRUCTION
CRT 610533

U.S. DEPARTMENT OF ENERGY
RICHLAND OPERATIONS OFFICE
M ICP KAISER HANFORD COMPANY

PIPING
SLUICER ASSEMBLY
DISCHARGE MECHANISM

PROJECT W-320 TANK 241-C-106 SLUICING

SIZE	BLDG NO	DWGS NO	DWG NO	REV NO
F	241-C	4750	H-2-818551	1

SCALE 1/2 JOB NO. ER4319 SHEET 2 OF 8

PLOT SCALE: 1=2 KEHCAD

STATE OF WASHINGTON 31138 REGISTERED PROFESSIONAL ENGINEER
EXPIRES 5-24-97

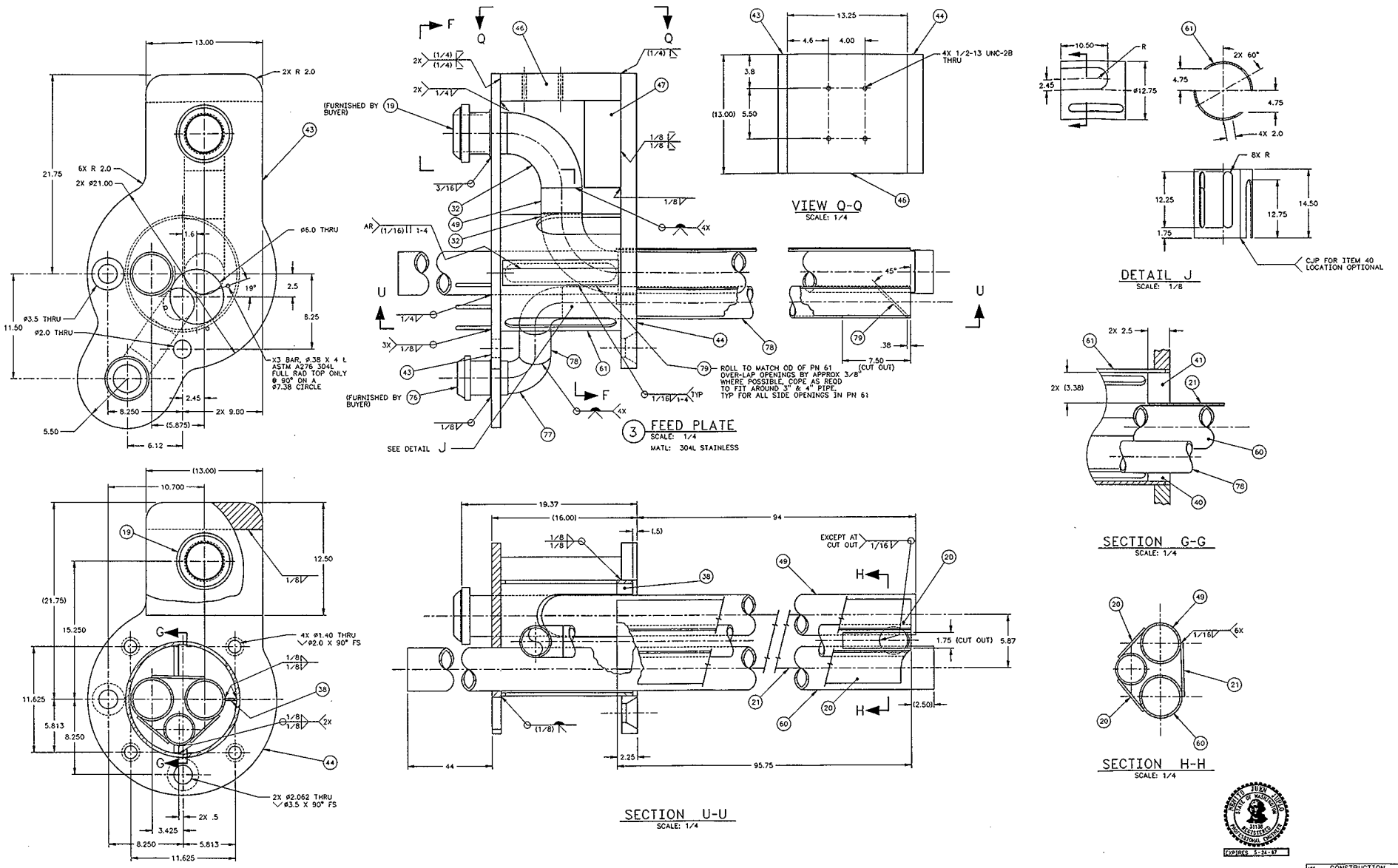

DIMENSIONING AND TOLERANCING SHALL BE INTERPRETED PER ANSI Y14.5M-1982
DIMENSIONS ARE IN INCHES UNLESS OTHERWISE SPECIFIED
UNSPECIFIED TOLERANCES SHALL BE:
DECIMAL .X ± .1 .XX ± .03 .XXX ± .010
ANGULAR ± 2°
ALL IMPLIED 90° ANGLES SHALL BE PERPENDICULAR WITHIN THE GREATEST TOLERANCE OF THE LINEAR DIMENSIONS
ALL COAXIAL FEATURES SHALL BE CONCENTRIC WITHIN .032 DIAMETER, UNLESS OTHERWISE SPECIFIED.

NUMBER	TITLE	NUMBER	TITLE
DRAWING TRACEABILITY LIST		NEXT USED ON	

REV NO.	DESCRIPTION	REV BY DATE	ECN APPROVALS
1	GEN DWG REV PER ECN W-320-XXX W-320-445,-402,-331 &-236 REV TO INCORP ECNS	RWS 9/10/96	

CAD FILE B551DR1 CAD CODE WIN95:ACD2:11.0:SS

DESIGNED	M TELANDER	DATE	
DRAWN BY	NENGTO J JUPLO	1993 1996	
CHECKED	C D JONES	1993 1996	
SAFETY	SEE DR/AT FORM		
QA/QC	SEE DR/AT FORM		
DUAL CHECK	SEE DR/AT FORM		
CAD CHECK	C D JONES	1993 1996	
REVISION NO.	28	1997	
APPROVED FOR CONSTRUCTION BY	E G ALLEN		
FOR	WHC	DATE	7-21-95

SAFETY CLASS 3 CONSTRUCTION
CDT 610533
U.S. DEPARTMENT OF ENERGY
M RICHLAND OPERATIONS OFFICE
ICP KAISER HANFORD COMPANY
PIPING
SLUICER ASSEMBLY
FEED PLATE
PROJECT W-320 TANK 241-C-106 SLUICING
SIZE F | BLDG NO. 241-C | DWG NO. 4750 | DWG NO. H-2-818551 | REV NO. 1
SCALE SHOWN | JOB NO. ER4319 | SHEET 4 OF 8
PLOT SCALE: 1=4 KEHCAD

EXPIRES 5-24-97

HNF-2477, Rev. 0
Page B-183

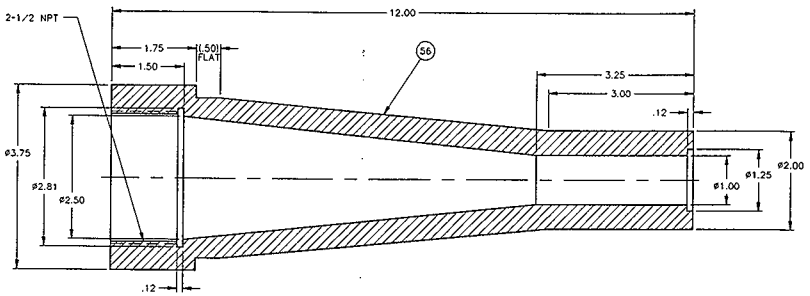

9 NOZZLE
SCALE: FULL

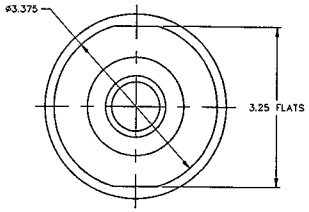

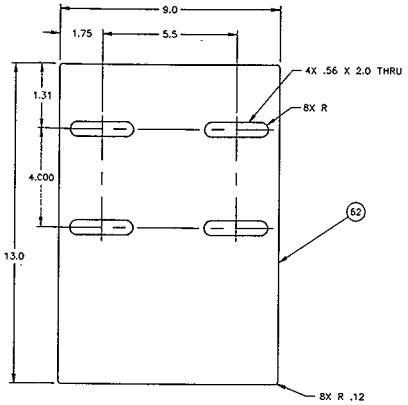

11 COUNTERWEIGHT
SCALE: 1/2

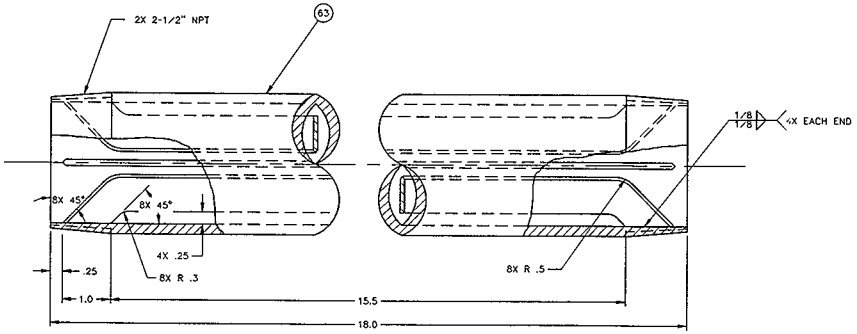

10 MONITOR TUBE
SCALE: FULL

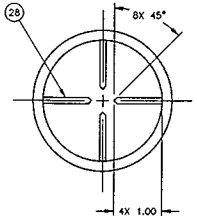

EXPIRES

DIMENSIONING AND TOLERANCING SHALL BE INTERPRETED PER ANSI Y14.5M-1982
DIMENSIONS ARE IN INCHES UNLESS OTHERWISE SPECIFIED
UNSPECIFIED TOLERANCES SHALL BE:
DECIMAL .X ± .1 .XX ± .03 .XXX ± .010
ANGULAR ± 2°
ALL IMPLIED 90° ANGLES SHALL BE PERPENDICULAR WITHIN THE GREATEST TOLERANCE OF THE LINEAR DIMENSIONS
ALL COAXIAL FEATURES SHALL BE CONCENTRIC WITHIN .032 DIAMETER, UNLESS OTHERWISE SPECIFIED.

NUMBER	TITLE
	DRAWING TRACK-HOLDTY LIST

NUMBER	TITLE
	NOTECHECKED

NEXT USED ON

REV NO.	DESCRIPTION	REV BY DATE	ISSN APPROVALS	APVD FOR IMPL FOR DATE
	REVISIONS			

CAD FILE B818551G CAD DWG 2J:IBM:ACD2:11.0:NN UNITS N

DESIGNED M TELANDER DATE
DRAWN BY
CHECKED
SAFETY SEE DR/AT FORM
QA/QC SEE DR/AT FORM
DWG. CHK SEE DR/AT FORM
CAD CHKR

REVIEW NO. 14 DATE 10/29/92
APPROVED FOR IMPLEMENTATION
BY
FOR WHC DATE

SAFETY CLASS 3
ISM

U.S. DEPARTMENT OF ENERGY
RICHLAND OPERATIONS OFFICE
ICF KAISER HANFORD COMPANY

PIPING
SLUICER ASSEMBLY
DETAILS

PROJECT W-320 TANK 241-C-106 SLUICING

SIZE	BLDG NO.	DRCD NO.	DWG NO.	REV NO.
F	241-C	4750	H-2-818551	0

SCALE SHOWN JOB NO. ER4319 SHEET 7 OF 8

PLOT SCALE: 1=1 KEHCAD

W320-27-046

Flushing Nozzle Lifting Force

FLUOR DANIEL NORTHWEST	CALCULATION IDENTIFICATION AND INDEX	Page i of ii Date 3 / 26 / 1997

This sheet shows the status and description of the attached Design Analysis sheets.

Discipline 27, Piping and Vessels WO/Job No. W320/E09147 Calculation No. W320-27-046

Project No. & Name Project W-320 Waste Retrieval for Tank 241-C-106

Calculation Item Flushing Nozzle Lifting Force

These calculations apply to:

Dwg. No. H-2-818454, Sht. 3, Detail 8 Rev. No. 1

Dwg. No. H-2-818501, Sht. 1 Rev. No. 1

Other (Study, CDR) ECN W-320-587 and USQ TF-97-0214 Rev. No.

The status of these calculations is:

- ☐ Preliminary Calculations
- ☒ Final Calculations
- ☐ Check Calculations (On Calculation Dated)
- ☐ Void Calculation (Reason Voided)

Incorporated in Final Drawings? ☐ Yes ☒ No

This calculation verified by independent "check" calculation? ☐ Yes ☒ No

Original and Revised Calculation Approvals:

	Rev. 0 Signature / Date	Rev. 1 Signature / Date	Rev. 2 Signature / Date
Originator	Therese Peterson 3/26/97		
Checked by	Danny L. Evans 3/27/97		
Approved by	Danny L. Evans 3/27/97		
Checked Against Approved Vendor Data	A. Ahmed 4-11-98		

INDEX

Design Analysis Page No.	Description
i	Calculation Identification and Index
ii	Calculation Cross Index
1	Objective, Assumptions, References, Conclusion
2	Calculations

CALCULATION CROSS INDEX

Subject Calculation No. W320-27-046

Subject Calculation Revision No.	Superceded by Calculation No.	These interfacing calculation/documents provide input to the subject calculation, and if revised may require revision of the subject calculation.		Results and conclusions of the subject calculation are used in these interfacing calculations and/or documents.		Does the output interface calculation/ documents require revision?		Has the output interface calculation/ documents been revised?		Discipline manager's signature and date indicating evaluation complete.
		Calcualtion/Document No.	Revision. No.	Calcualtion/Document No.	Revision. No.	Yes	No	Yes	No	
		W-320-27-003	0				X		X	7/21/98 D.L. Evans
		W-320-27-009	0				X		X	7/21/98 D.L. Evans

KEH 1975.00 (12/88)

KAISER ENGINEERS
HANFORD

Calc. No. W320-27-046
Revision 0
Page No. 1 of 2

DESIGN ANALYSIS

Client Numatec Hanford Corporation	WO/Job No. E09147/P2XY01		
Subject Flushing Nozzle Lifting Force	Date 3/11/97	By TK Peterson	
	Checked 3/24/97	By D.L. Evans	
Location 241-AY-102 02E Sluice Pit	Revised	By	

This calculation is to support USQ TF-97-0214 and ECN W320-587. The goal is to show a potential accident scenario, of not blanking off the flushing nozzle after flushing the sluice line, will not dislodge the cover block plug directly above the nozzle.

Assume that the velocity does not significantly change between the nozzle and just prior to striking the bottom of the plug. Also, assume that the fluid stream does not significantly widen in diameter from the nozzle exit to striking the bottom face of the plug. Assume the maximum flow rate from the inline pump is 680 gpm for the worst case. Assume worst case is for 10% solids with a specific gravity of 1.12. Assume all fluid is being pumped through the nozzle.

The calculation will use the formula for an open jet on a horizontal flat plate and comepare the resultant force with the weight of the cover block plug.

References:

(1) H-2-818454, Sheet 3, Detail 8
(2) H-2-818501, Sheet 1
(3) H-2-818503, Sheet 1
(4) HNF-SD-W320-FDC-001, Rev. 4, Sect. 2.2.2
(5) Vendor Data: Lawrence Pumps Inc, Vertical Inline, RPM 3056, Item P-1362
(6) Lawrence Pumps Inc, Submersible/Slurry, RPM 1760, Item P-1361
(7) Mechanical Engineering Reference Manual, 8th ed., Michael Lindeburg, p. 3-29
(8) H-2-818544, Sheet 2

Conclusion:

The force developed in the worst case situation (212 lb) is not sufficient to lift the cover block plug (350 lb).

KAISER ENGINEERS
HANFORD

Calc. No. W320-27-046
Revision 0
Page No. 2 of 2

DESIGN ANALYSIS

Client Numatec Hanford Corporation	WO/Job No. E09147 / P2XY01		
Subject Flushing Nozzle Lifting Force	Date 3/11/97	By TK Peterson	
	Checked 3/24/97	By D.L. Evans	
Location 241-AY-102 02E Sluice Pit	Revised	By	

Cover block plug weight = 350 Ref. 1

$\dot{Q}$ = 680 gpm, maximum Ref. 5+6

Nozzle is 2" Ø schedule 40, 2 1/16" ID Ref. 2+3

specific gravity, SpG = 1.12 for 10% solids Ref. 4

16" from nozzle to bottom face of plug Ref. 8

$$F = \left(\frac{\dot{V}\rho}{g_c}\right)\sqrt{v_o^2 - 2gh}$$ Ref. 7

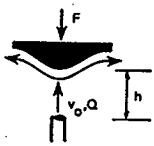

Open Jet on Horizontal Plate

$\rho = (1.12)(62.4\ lb/ft^3)$

$\rho = 69.888\ lb/ft^3$

$g = 32.2\ ft/s^2 \qquad g_c = 32.2\ \frac{lbm \cdot ft}{lbf \cdot s^2}$

$h = 1.33\ ft$

$$\dot{V} = \left(680\ gpm\right)\left(0.002228\ \frac{ft^3/s}{gpm}\right) = 1.515\ ft^3/s$$

$$v_o = \frac{1.515\ ft^3/s}{\left(\frac{2.0625\ in}{2(12\ in/ft)}\right)^2 \pi} = 65.3\ ft/s$$

$$F = \left(\frac{(1.515\ ft^3/s)(69.888\ lbm/ft^3)}{32.2\ \frac{ft\text{-}lbm}{lbf}}\right)\sqrt{(65.3\ ft/s)^2 - 2(32.2\ ft/s^2)(1.33\ ft)}$$

F = 212.55 lbf of lift < 350 lb of plug weight

3

FLUID STATICS AND DYNAMICS

Nomenclature

a	acceleration	ft/sec^2
bhp	brake horsepower	hp
A	area	ft^2
c	speed of sound in fluid	ft/sec
C	compressibility, Hazen-Williams constant, or coefficient	ft^2/lbf, –, –
d	depth, diameter	ft
D	diameter, drag	ft, lbf
ehp	electrical horsepower	hp
E	bulk modulus, energy	lbf/ft^2, ft-lbf
f	Darcy friction factor	–
fhp	friction horsepower	hp
F	force	lbf
F_{va}	velocity of approach factor	–
g	local gravitational acceleration	ft/sec^2
g_c	gravitational constant (32.2)	$lbm\text{-}ft/lbf\text{-}sec^2$
G	mass flow rate per unit area	$lbm/sec\text{-}ft^2$
h	fluid height, head, depth	ft
H	total head	ft
I	moment of inertia	ft^4
k	ratio of specific heats	–
K	minor loss coefficient	–
L	length of pipe, lift	ft, lbf
m	mass	lbm
$\dot{m}$	mass flow rate	lbm/sec
n	rotational speed	rpm
n_s	specific speed	–
N_{Fr}	Froude number	
N_{Re}	Reynolds number	–
N_W	Weber number	–
p	pressure	lbf/ft^2
P	power	ft-lbf/sec
Q	flow rate	gpm
r	radius	ft
r_h	hydraulic radius	ft
R	specific gas constant	ft-lbf/lbm-°R
s	length	ft
S.G.	specific gravity	–
t	time	sec
T	absolute temperature	°R
v	velocity	ft/sec
V	volume	ft^3
$\dot{V}$	volumetric flow rate	ft^3/sec
w	weight	lbf
whp	water horsepower	hp
x	x-coordinate	ft
y	distance, y-coordinate	ft
z	height above datum	ft

Symbols

β	contact angle, beta ratio	°
γ	specific weight	lbf/ft^3
ϵ	specific roughness	ft
η	efficiency	–
θ	angle	°
μ	absolute viscosity	$lbf\text{-}sec/ft^2$
ν	kinematic viscosity	ft^2/sec
ρ	density	lbm/ft^3
τ	shear stress	lbf/ft^2
T	surface tension	lbf/ft
υ	specific volume	ft^3/lbm
ϕ	angle, deflection angle	°
ω	rotational speed	rad/sec

Subscripts

a	atmospheric
A	added
b	blade
c	centroid, contraction
d	discharge
D	drag
e	equivalent, entrance
E	English, extracted
f	friction, flow
i	inside, inlet

3. F and x are positive to the right. F and y are positive upward.

4. F is the force on the fluid. The force on the walls or support has the same magnitude but opposite direction.

5. The fluid is assumed to flow horizontally from left to right and is assumed to possess no y-component of velocity.

The *momentum* possessed by a moving fluid is defined as the product of mass (in slugs) and velocity (in ft/sec). The g_c term in equation 3.146 is needed to convert pounds-mass into slugs.

$$\text{momentum} = \frac{mv}{g_c} \qquad 3.146$$

Impulse is defined as the product of a force and the length of time the force is applied.

$$\text{impulse} = F\Delta t \qquad 3.147$$

The *impulse-momentum principle* states that the impulse applied to a moving body is equal to the change in momentum. This is expressed by equation 3.148.

$$F\Delta t = \frac{m\Delta v}{g_c} \qquad 3.148$$

Solving for F and combining m and Δt yields equation 3.149.

$$F = \frac{m\Delta v}{g_c\Delta t} = \frac{\dot{m}\Delta v}{g_c} \qquad 3.149$$

Since F is a vector, it can be broken into its components

$$F_x = \frac{\dot{m}\Delta v_x}{g_c} \qquad 3.150$$

$$F_y = \frac{\dot{m}\Delta v_y}{g_c} \qquad 3.151$$

If the fluid flow is directed through an angle ϕ,

$$\Delta v_x = v(\cos\phi - 1) \qquad 3.152$$

$$\Delta v_y = v \sin\phi \qquad 3.153$$

There are several fluid applications of the impulse-momentum principle.

A. JET PROPULSION

$$\dot{m}_2 = \dot{m}_1 + \dot{m}_{\text{fuel}} = \dot{V}_1\rho_1 + \dot{V}_{\text{fuel}}\rho_{\text{fuel}} \qquad 3.154$$

$$F_x = \frac{\dot{V}_2\rho_2 v_{2x} - \dot{V}_1\rho_1 v_{1x}}{g_c} \qquad 3.155$$

$$F_y = \frac{\dot{V}_2\rho_2 v_{2y} - \dot{V}_1\rho_1 v_{1y}}{g_c} \qquad 3.156$$

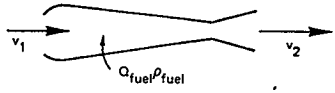

Figure 3.27 Jet Propulsion

B. OPEN JET ON VERTICAL FLAT PLATE

$$\Delta v_y = 0 \qquad 3.157$$

$$\Delta v_x = -v \qquad 3.158$$

$$F_x = \frac{-\dot{m}v}{g_c} = \frac{-\dot{V}\rho v}{g_c} \qquad 3.159$$

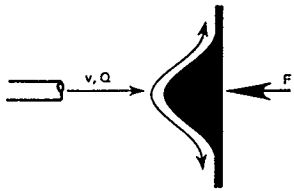

Figure 3.28 Open Jet on Vertical Plate

C. OPEN JET ON HORIZONTAL FLAT PLATE

As the jet travels upwards, its velocity decreases since gravity is working against it. By the time the liquid has reached the plate, the velocity has become

$$v_y = \sqrt{v_0^2 - 2gh} \qquad 3.160$$

$$\Delta v_x = 0 \qquad 3.161$$

$$\Delta v_y = -\sqrt{v_0^2 - 2gh} \qquad 3.162$$

$$F = \left(\frac{-\dot{m}}{g_c}\right)\sqrt{v_0^2 - 2gh} = \left(\frac{\dot{V}\rho}{g_c}\right)\sqrt{v_0^2 - 2gh} \qquad 3.163$$

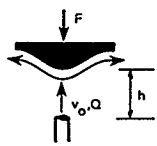

Figure 3.29 Open Jet on Horizontal Plate

D. OPEN JET ON SINGLE STATIONARY BLADE

v_2 may not be the same as v_1 if friction is present. If no information is given, assume that $v_2 = v_1$.

$$\Delta v_x = v_2\cos\phi - v_1 \qquad 3.164$$

$$\Delta v_y = v_2 \sin\phi \qquad 3.165$$

Sluice

SLUICE

LAWRENCE PUMPS INC.
371 MARKET STREET, LAWRENCE, MA 01843-9966

○ TOTAL DYNAMIC HEAD
◇ EFFICIENCY
□ BHP AT 1.12 SP.GR.

Viscosity: 14.17 cps ---
IMPELLER: C55607
CASING: C55608/23-171

TEST NO.: T3549
TEST DATE: 04/22/96
TESTED BY: FVX
ACCEPTED BY: SV 4/30/96

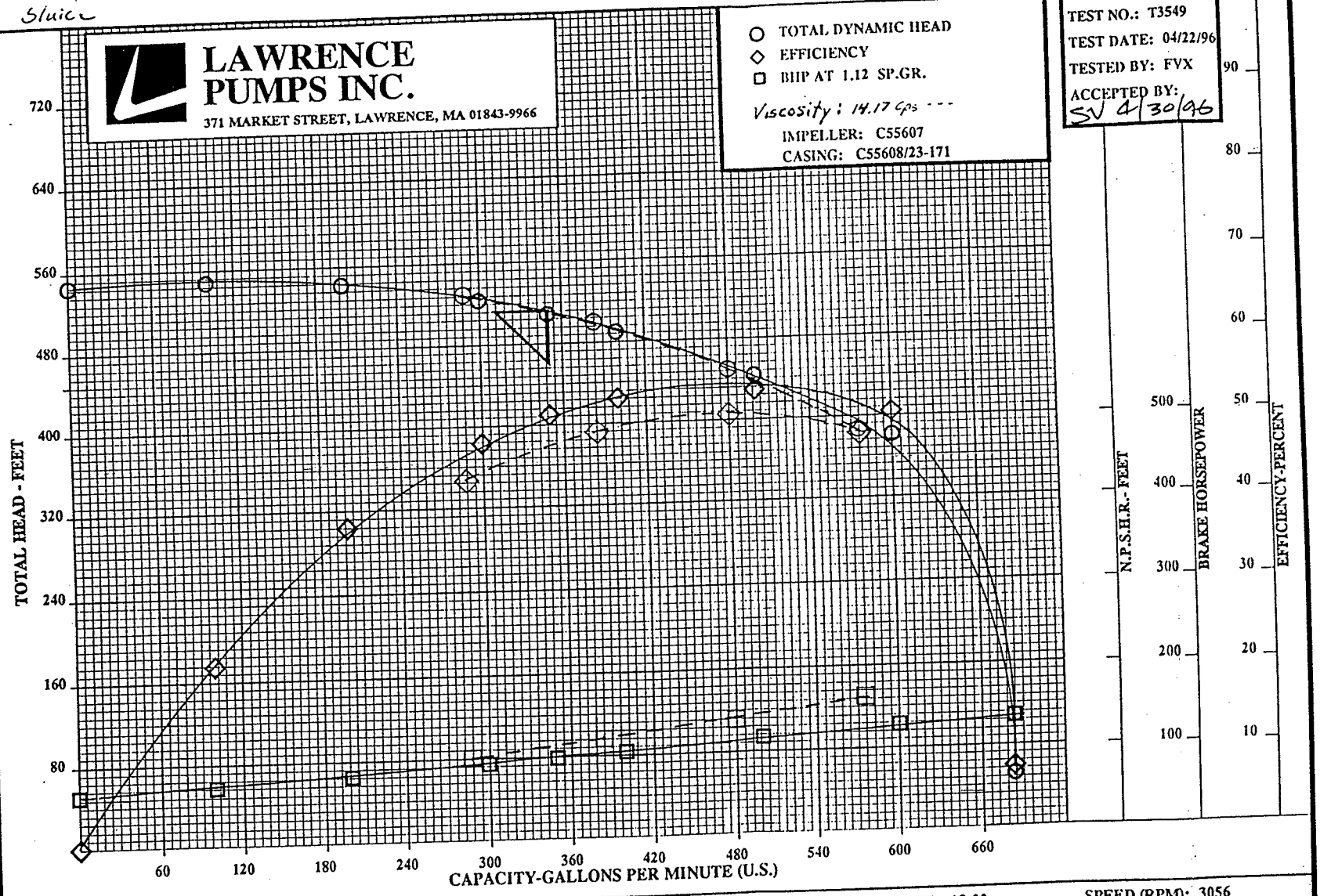

CUSTOMER: WESTINGHOUSE HANFORD	SERIAL NUMBER: 91232-1	IMPELLER TESTED (IN): 13.00	SPEED (RPM): 3056
USER NAME: WESTINGHOUSE HANFORD	PUMP TYPE: VERTICAL INLINE	IMPELLER PLOTTED (IN): 13.00	IMP DIA. MIN (IN): 9.00
P.O. NUMBER: MZ4-XVV-78259	PUMP SIZE: 3X3X13	RATED FLOW (GPM): 350	IMP DIA. MAX (IN): 13.00
ITEM NUMBER: P-1362	SERVICE: RADIOACTIVE SLURRY	RATED HEAD (FT): 512	IMP EYE AREA (IN^2):

Sluice

SLUICE

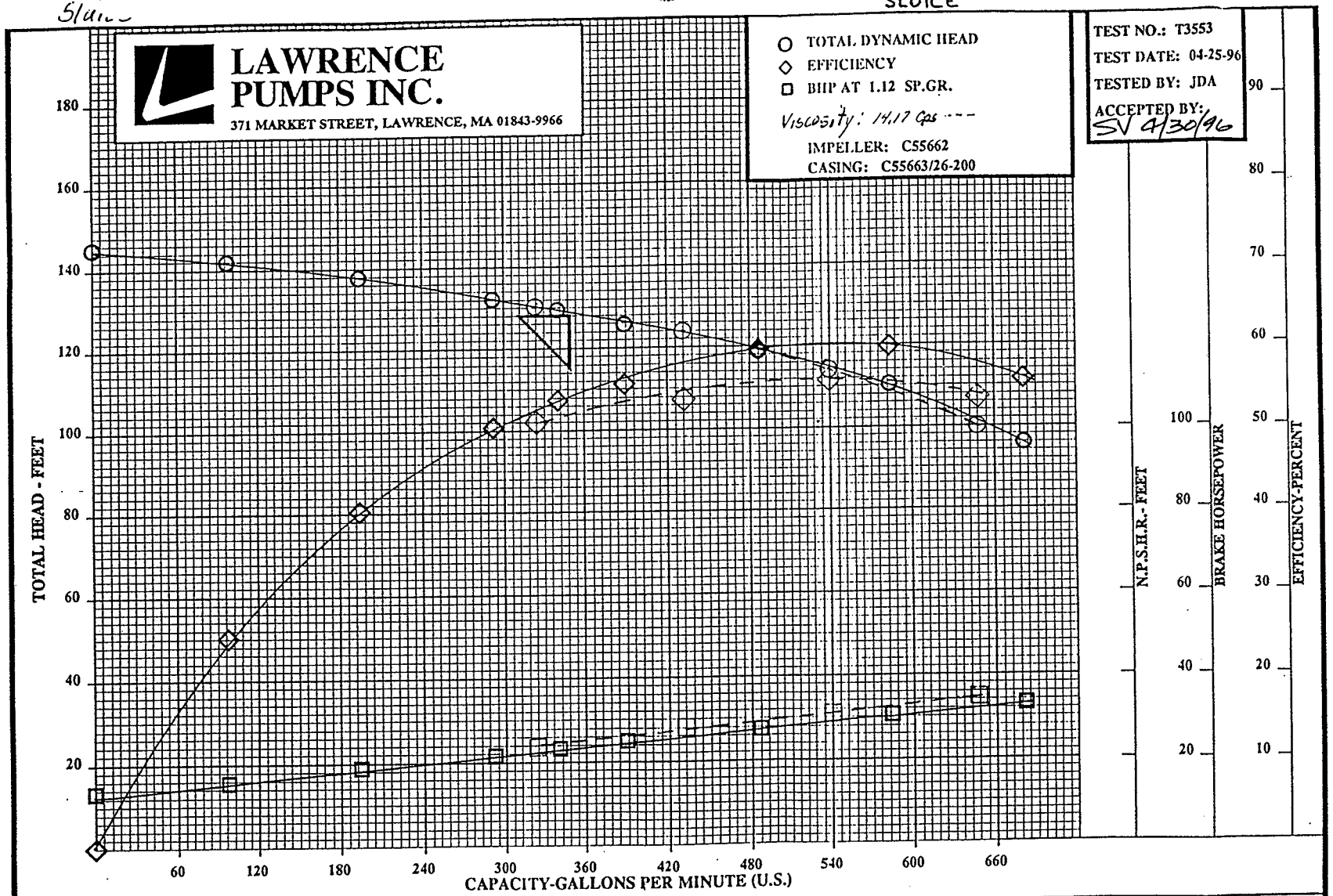

CUSTOMER: WESTINGHOUSE HANFORD	SERIAL NUMBER: 91231-1	IMPELLER TESTED (IN): 11.25	SPEED (RPM): 1760
USER NAME: WESTINGHOUSE HANFORD	PUMP TYPE: SUBMERSIBLE/SLURRY	IMPELLER PLOTTED (IN): 11.25	IMP DIA. MIN (IN): 7.50
P.O. NUMBER: MZ4-XVV-78259	PUMP SIZE: 3X4X13	RATED FLOW (GPM): 350	IMP DIA. MAX (IN): 13.00
ITEM NUMBER: P-1361	SERVICE: RADIOACTIVE SLURRY	RATED HEAD (FT): 128	IMP EYE AREA (IN^2):

W320-27-047

W-320 Pit Volumes and In-Out Areas

	CALCULATION IDENTIFICATION AND INDEX	Page i of i Date 03/12/97

This sheet shows the status and description of the attached Design Analysis sheets.

Discipline: PIPING/ VESSALS WO/Job No.: EO9142/ W-320 Calculation No.: W320-27-047

Project No. & Name: PROJECT W-320, TANK 241-C-106 SLUICING

Calculation Item: W-320 PIT VOLUMES AND IN-OUT AREAS,
241-C-106 (Pits 06A and 06C), 241-AY-102 (Pits 02A and 02E)

These calculations apply to:

Dwg. No. None Rev. No. N/A

Dwg. No. None Rev. No. N/A

Other (Study, CDR): None Rev. No. N/A

The status of these calculations is:

[ ] Preliminary Calculations

[X] Final Calculations

[ ] Check Calculations (On Calculation Dated)

[ ] Void Calculation (Reason Voided)

Incorporated in Final Drawings? [ ] Yes [X] No

This calculation verified by independent "check" calculations? [ ] Yes [X] No

Original and Revised Calculation Approvals:

	Rev. 0 Signature/Date	Rev. 1 Signature/Date	Rev. 2 Signature/Date
Originator	Michael R. Custer Michael R Custer 3/19/97		
Checked by	03/01/97		
Approved by	Danny K. Evans 4/1/97		
Checked Against Approved Vendor Data	4.11.98		

INDEX

Design Analysis Page No.	Description
i	Calculation Identification and Index
1	OBJECTIVE; CRITERIA; DATA; ASSUMPTIONS; METHODS; REFERENCES
2-4	SUMMARY - VOLUME AND AREA INFORMATION
ATTACH. A	ESTIMATED EQUIPMENT VOLUMES/ PENETRATION AND GAP AREAS (17 SHEETS)

DESIGN ANALYSIS

Client: NUMATEC HANFORD CORPORATION
WO/Job No. E09142/ W-320
Subject: W-320 PIT VOLUMES AND IN-OUT AREAS
Date: 03/12/97
By: M. R Custer MRC
Checked: 04/01/97
By: N. J. JUPLO
Location: TANK 241-C-106 and 241-AY-102, 200E
Revised:
By:

OBJECTIVE:

The objective of this calculation is to determine the net volumes and air flow areas in and out of pits 06A and 06C at Tank 241-C-106 and pits 02A and 02E AT tANK 241-ay-102.

CRITERIA:

1. N/A

DATA:

1. N/A

ASSUMPTIONS:

1. N/A

METHODS:

1. N/A

REFERENCES:

1. H-2-818448, Sh 1
2. H-2-818450, Sh 1
3. H-2-818453, Sh 1 thru 3
4. H-2-818454, Sh 1 thru 2
5. H-2-818490, Sh 1 thru 2
6. H-2-818494, Sh 1 thru 2
7. H-2-818496, Sh 1 thru 6
8. H-2-818500, Sh 1
9. H-2-818501, Sh 1
10. H-2-818502, Sh 1
11. H-2-818503, Sh 1
12. H-2-818505, Sh 1
13. H-2-818508, Sh 1
14. H-2-818515, Sh 1
15. H-2-818518, Sh 1
16. H-2-818524, Sh 1 and 2
17. H-2-818526, Sh 1 and 2
18. H-2-818537, Sh 1
19. H-2-818542, Sh 1
20. H-2-818543, Sh 1
21. H-2-818544, Sh 1 and 2
22. H-2-818545, Sh 1
23. H-2-818549, Sh 1

DESIGN ANALYSIS

Client: NUMATEC HANFORD CORPORATION
Subject: W320 PIT VOLUME AND IN-OUT AREAS
Location: 241-C-106 AND 241-AY-102

WO/Job No. E09142/ W-320
Date: 03/12/97 By: M.R Custer MRC.
Checked: 04/01/97 By: N. J. JUPLO
Revised: By:

SUMMARY - VOLUMES AND IN-OUT AREAS: (Refer to Attachment A)

- **TANK 241-C-106, PUMP PIT (PIT 06A)**
  - PIT FREE VOLUME
    a. PIT VOLUME = 14.5 ft x 11.0 ft x 6.4 ft = 1020 cu ft
    b. INSTALLED EQUIPMENT VOLUME = 41 cu ft
    FREE VOLUME = 979 cu ft
  - VENTILATION FLOW PATH AREA, PIT TO TANK
    a. 6" HIGH CAPACITY DRAIN = 28.3 sq in (Winch)
    b. OTHER PENETRATIONS = NONE
    TOTAL FLOW AREA, PIT TO TANK = 28.3 sq in
  - VENTILATION FLOW PATH AREA, PIT TO ATMOSPHERE
    a. WINCH DRIVE PORT = 9.5 sq in
    b. COVER BLOCK GAPS (NORTH SIDE) = 9.0 sq in
    c. COVER BLOCK GAPS (SOUTH SIDE) = 12.0 sq in
    TOTAL FLOW AREA, PIT TO ATMOSPHERE:
    Maximum = 30.5 sq in
    Minimum = 9.5 sq in

- **TANK 241-C-106, SLUICE PIT (PIT 06C)**
  - PIT FREE VOLUME
    a. PIT VOLUME = 9.0 ft x 8.5 ft x 7.6 ft = 581 cu ft
    b. INSTALLED EQUIPMENT VOLUME = 5.0 cu ft
    FREE VOLUME = 576 cu ft
  - VENTILATION FLOW PATH AREA, PIT TO TANK
    a. 6" HIGH CAPACITY DRAIN = 28.3 sq in (Sluicer)
    b. OTHER PENETRATIONS = NONE
    TOTAL FLOW AREA, PIT TO TANK = 28.3 sq in

DESIGN ANALYSIS

Client: NUMATEC HANFORD CORPORATION
Subject: W320 PIT VOLUME AND IN-OUT AREAS
Location: 241-C-106 AND 241-AY-102

WO/Job No. E09142/ W-320
Date: 03/12/97 By: M.R Custer MRC
Checked: 04/01/97 By: N.J. JUPLO
Revised: By:

- VENTILATION FLOW PATH AREA, PIT TO ATMOSPHERE

  a. COVER BLOCKS (NORTH SIDE) = 10.0 sq in

  b. COVER BLOCKS (SOUTH SIDE) = 7.5 sq in

  TOTAL FLOW AREA, PIT TO ATMOSPHERE:

  MAXIMUM = 17.5 sq in
  MINIMUM = 0.0 sq in, however assume 1.0 sq in (Due to incomplete sealing)

■ **TANK 241-AY-102, PUMP PIT (PIT 02A)**

- PIT FREE VOLUME

  a. PIT VOLUME = 12.0 ft x 8.0 ft x 5.0 ft = 480 cu ft

  b. INSTALLED EQUIPMENT VOLUME = 7.7 cu ft

  FREE VOLUME = 472 cu ft

- VENTILATION FLOW PATH AREA, PIT TO TANK

  a. 6" HIGH CAPACITY DRAIN = 28.3 sq in (Distributor)

  b. OTHER PENETRATIONS = NONE

  TOTAL FLOW AREA, PIT TO TANK = 28.3 sq in

- VENTILATION FLOW PATH AREA, PIT TO ATMOSPHERE

  a. VALVE HANDLE - 1/16 in gap @ 3 in. HOLE = 0.9 sq in x 2 = 1.8 sq in

  b. COVER BLOCKS GAPS (EAST/ WEST SIDES) = 107.0 sq in

  c. 3" DIA. PENETRATION (DRAIN SEAL) = 0.6 sq in

  TOTAL FLOW AREA, PIT TO ATMOSPHERE:

  MAXIMUM = 108.2 sq in
  MINIMUM = 1.2 sq in

■ **TANK 241-AY-102, SLUICE PIT (PIT 02E)**

- PIT FREE VOLUME

  a. PIT VOLUME = 8.0 ft x 6.0 ft x 7.0 ft = 336 cu ft

  b. INSTALLED EQUIPMENT VOLUME = 43.0 cu ft

  FREE VOLUME = 293 cu ft

DESIGN ANALYSIS

Client: NUMATEC HANFORD CORPORATION
Subject: W320 PIT VOLUME AND IN-OUT AREAS
Location: 241-C-106 AND 241-AY-102

WO/Job No. E09142/ W-320
Date: 03/12/97 By: M.R Custer MRC
Checked: 04/01/97 By: N.J. JUPLO
Revised: By:

- VENTILATION FLOW PATH AREA, PIT TO TANK

  a. 6" HIGH CAPACITY DRAIN = 28.3 sq in (Winch)

  b. OTHER PENETRATIONS = NONE

  TOTAL FLOW AREA, PIT TO TANK = 28.3 sq in

- VENTILATION FLOW PATH AREA, PIT TO ATMOSPHERE

  a. WINCH DRIVE PORT = 9.5 sq in

  b. COVER BLOCK GAP (NORTH SIDE) = 9.1 sq in

  c. COVER BLOCK GAP (NORTH SIDE) = 10.3 sq in

  TOTAL FLOW AREA, PIT TO ATMOSPHERE:

  MAXIMUM = 28.9 sq in
  MINIMUM = 9.5 sq in

ATTACHMENT A

CALCULATION W320-27-047, Revision 0
(TOTAL PAGES = 18, COVER PAGE + 17)

FLUOR DANIEL
NORTHWEST

ATTACHMENT A
Calc. No. W320-27-047
Revision No. 0
Page No. 1 of

DESIGN ANALYSIS

Client NUMATEC HANFORD CORP.
Subject:
Location:

WO/Job No.
Date: 03/12/97
Checked: 04/01/97
Revised:

Filename
By: MRC
By: H. J. JUFLO
By:

TANK 241-AY-102, PUMP PIT 02A

General Ref. dwgs
AY-02A, H-2-818542
AY-02E, H-2-818543
AY-02A, H-2-818544, sht 1&2
AY-02E, H-2-818545

1) RISERS: a) R- (42")
b) R- ___ (4")
c) FLOOR DRAIN

2) JUMPER ASSEMBLIES:
a) H-2-818501 w/ U-11 connector
b) H-2-818502 w/ U-3 & U-8 connectors

3) EQUIPMENT:
a) DISTRIBUTOR (H-2-818537)

4) COVER BLOCKS (H-2-818454, SH. 2)

TANK 241-AY-102, SLUICE PIT 02E

1) RISERS:
a) R- ___ (34")

2) JUMPER ASSEMBLIES:
a) H-2-818503 sht. 1

3) EQUIPMENT:
a) WINCH ASSEMBLY (H-2-818494-2)
b) SLUICE BOOSTER PUMP
c) PIT COOLING FAN COIL UNIT/SUPPORT
1) COOLING FAN COIL UNIT (ISPEC C7, FC-0621)
2) COOLING FAN COIL SUPPORT (H-2-818490, sht 1&2)

4) COVER BLOCKS (H-2-818454, Sh2)

FLUOR DANIEL
NORTHWEST

ATTACHMENT A
Calc. No. W320-27-047
Revision No. 0
Page No. 2 of

DESIGN ANALYSIS

Client NUMATEC HANFORD CORP.
Subject:
Location:

WO/Job No.
Date: 03/12/97
Checked: 04/01/97
Revised:

Filename
By: MRC
By: N. J. JUELO
By:

TANK 241-C-106, PUMP PIT 06A

Ref dwgs
AT 06A H-2-818524 sht 1, 2
PIT 06C H-2-818526 sht 1, 2

1) RISERS: a) R-5 (4") R-7 ____
b) R-6 (12")
c) R-9 (36")
d) FLOOR DRAIN

2) JUMP ASSEMBLIES:
a) H-2-818505
b) H-2-818508

3) EQUIPMENT:
a) SLURRY BOOSTER PUMP (H-2-818500)
b) WINCH ASSEMBLY (H-2-818494)
c) EXISTING PUMP, PTX141 (R-6)

4) COVER BLOCK (GAPS/Penetrations): H-2-818448, SH 5
a) ELECT. ACCESS SLOT

TANK 241-C-106, SLUICE PIT 06C

1) RISERS: R-3 (12"), R-4 (4"), FLOOR DRAIN

2) JUMPER ASSEMBLIES:
a) H-2-818515
b) H-2-818516

3) EQUIPMENT:
a) SLUICER ASSEMBLY (H-2-818549)

4) COVER BLOCK (GAPS/ PENETRATIONS): H-2-818448, sht. 2

ESTIMATED VOLUMES:

1. DISTRIBUTOR: (241-AY-102, PIT 02A)

a) ADAPTER PLATE, $\pi\left[\frac{(57'')^2-(28'')^2}{4}\right](1.5'') = 2140.6\ in^3$

b) ADAPTER PLATE LUGS, $\left[\left(\frac{8''+4''}{2}\right)(12'')(.5)\right]4 + \left(\frac{2''}{2}\right)^2\pi(4'') = 156.6\ in^3$

c) TRUNIONS, $2\left[(4''/2)^2\pi \times 5''\right] = 125.7\ in^3$

d) DOWELS, (TOTAL LENGTH, 18'' FOR 1 PLATE), $18''(2''/2)^2\pi(2) = 113.1\ in^3$

e) PL ⑦, $\pi\left[\frac{(36^2-28^2)}{4}(1.5'')\right] = 603.2\ in^3$

f) PL ⑧, $\pi\left[\frac{36^2-47/8^2}{4}\right](1.5'') = 1498.8\ in^3$

g) CHAMBER BETWEEN ⑦ & ⑧, $5''(36''/2)^2\pi = 5089.4\ in^3$

h) 4"ϕ NOZZLE & PIPE, $11.5''(4''/2)^2\pi = 144.5\ in^3$

i) 2"ϕ NOZZLE & PIPE, $10.3(2''/2)^2\pi = 32.4\ in^3$

TOTAL VOLUME = $\frac{9904.3\ in^3}{1728} = 5.7\ ft^3$

ESTIMATED VOLUMES: (CONT.)

2. WINCH ASSEMBLY: (241-C-106, PIT 06A/241-AY-102, PIT 02E), EACH

a) ADAPTER PLATE (C-FARM), 56" DIA, 1½" thick
b) WINCH PLATE (45" DIA, 1½" thick)
c) WINCH ASSEMBLY

a) Volume = $\left(\frac{56''}{2}\right)^2 \pi \times 1.5'' = \underline{3695\ in^3}$

b) Volume = $\left(\frac{45}{2}\right)^2 \pi \times 1.5'' = \underline{2386\ in^3}$

c) Winch Assembly:

1) 1" BASE PLATE: $29.17'' \times 22.25'' \times 1'' = \underline{515.0\ in^3}$
2) Gear box: $13.30'' \times 27.25'' \times 31.42'' = \underline{11{,}387.0\ in^3}$
3) Sheave w/cable: $\left(\frac{28.0}{2}\right)^2 \pi (3.75'') = \underline{2309.0\ in^3}$
4) Idler sheave: $\left(\frac{5''}{2}\right)^2 \pi (2.5'') = \underline{49.1\ in^3}$
5) HANFORD NOZZEL: $\left(\frac{4''}{2}\right)^2 \pi (6'') = \underline{75.4\ in^3}$
6) DRIVE GUIDE: $\left(\frac{5''}{2}\right)^2 \pi (8'') = \underline{157.0\ in^3}$
7) Pillow Block/support sheave: $16'' \times 2.75'' \times 13.25'' = \underline{583.0\ m^3}$
8) DRIVE SHAFT: $82.88'' \times \left(\frac{1''}{2}\right)^2 \times \pi = \underline{65.0\ in^3}$
9) LIFTING LUGS:
ADAPTER PLATE = $\left[2(.5)(12'')\left(\frac{8''+4''}{2}\right) + \left(\frac{3''}{2}\right)^2 \pi \times 3''\right] 2 = \underline{162.8\ in^3}$
WINCH PLATE = $\left[2(.75)(7'')(4'.13'') + \left(\frac{1\frac{3}{8}}{2}\right)^2 \pi \times 2''\right] 3 = \underline{139.0\ in^3}$

TOTAL VOLUME = $21{,}523.0\ in^3 = \underline{12.5\ ft^3}$

ESTIMATED VOLUMES: (CONT.)

3.a) Booster Pump: (241-C-106, PIT 06A/241-AY-102 PIT 02E) EACH

1) Motor portion: $60'' \times \left(\frac{26''}{2}\right)^2 \pi = \underline{31{,}856.0\ in^3}$

2) Pump portion (lower): $9'' \times \left(\frac{21''}{2}\right)^2 \pi = \underline{3118.0\ in^3}$

3) Pump portion (upper):

$$\frac{\pi(20^3 - 18.5^2)}{4}(40'') + \left(\frac{7.5}{2}\right)^2 \pi\ (40'') = \underline{3581\ in^3}$$

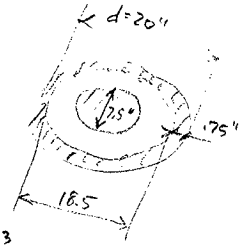

$A = \frac{\pi(d^2 - d_1^2)}{4}$

TOTAL VOLUME $= \frac{38565\ in^3}{1728} = \underline{\underline{22.3\ ft^3}}$

3.b) EXISTING PUMP PTX146 (R-G)

VOLUME IN PIT $= 10''\phi \times 44'', \left(\frac{10''}{2}\right)^2 \pi\ (44'') = 3455.8\ in^3$

BASE PL, $\approx 1\frac{1}{4}'' \times 28''\phi = 923.6\ in^3$

W4X13 LUGS (2), $20'' \times 3.83\ (2) = \underline{153.2\ in^3}$

TOTAL VOLUME $= \frac{4532.6}{1728} = 2.$

$= \underline{\underline{2.6\ ft^3}}$

ESTIMATED VOLUMES: (CONT.)

4. SLUICER ASSEMBLY:

a) FEED PLATE ASSEMBLY:

(43) $1''\left[(13'' \times 13.5'') + (21''/2)^2\pi + (5.5''/2)^2\pi\right]$ = 545.6 in³

(44) $1.75''\left[(13'' \times 13.5'') + \frac{\pi(21''^2 - 11.6''^2)}{4}\right]$ = 729.3 in³

(76) 3" connector, $4''\left[(3.5''/2)^2\pi\right]$ = 38.4 in³

3" pipe, $\left[(3.5/2)^2\pi(7.5'' + 4'')\right]$ = 110.6 in³

(19) 4" NOZZEL, $4''\left[(4.5/2)^2\pi\right]$ = 63.6 in³

4" PIPE, $\left[(4.5/2)^2\pi(9.82'' + 2.5'')\right]$ = 195.9 in³

(61) 12" PIPE w/HOLES (82.4 m³)

12" PIPE (CHAMBER VOLUME = $(12.75/2)^2\pi(16 - 2.75'')$ = 1691.7 in³) → = 1691.7 in³

(46) 3" PL, 13.0" × 13.25" × 3" = 516.8 in³

(60) TUBING, 4 3/4" O.D × 4 1/4" ID, $\pi(4.75''/2)^2 \times 44''$ = 779.7 in³

(62) COUNTERWT, $.5\left[9'' \times 13.0'' \times .5''\right]$ = 292.5 in³

(12) BAIL, $(1.38/2)^2\pi\left[9.4'' + 2(12'')\right]$ = 49.9 in³

(47) 4" PL, $4''(12.5'')(13'')$ = 650.0 in³

(59) TUBING, 4" O.D × 3" I.D, 2'-6" long, $(4''/2)^2\pi \times 30''$ = 377.0

TOTAL VOLUME = $\frac{6040.0 \text{ in}^3}{1728}$

= **3.5 ft³**

647-10
-38-4
9-6
-2-0
7'-6

7'-6
×1.4
6-2
74.4
-44
30"

EQUIPMENT VOLUMES: (CONT.)

5. PIT COOLING FAN COIL/SUPPORT: (241-AY-02E)

a) COOLING FAN COIL, 13.25" x 18.5" x 36" (VENDOR DWG) = 8824.5 in³

b) (37) 1" PIPING, (95.17" + 97.17") (1.32/2)²π = 263.2 in³

c) SUPPORT STRUCTURE,

(29) C4x5.4, 1.54 in² (131.6 in) (A = 1.54 in²) = 202.7 in³

(30) ∠2½x2½x¼ (8" LG), 1.19 in² (8") = 9.5 in³

(31) ∠1½x1½x¼ (6" LG), 0.68 in² (6") = 4.1 in³

(32) PL 1½"x4"x¼" THK (6), = 9.0 in³

(33) PL 12½"x4"x½" THK (1) = 25.0 in³

d) 1" PIPE fittings:

(38) 8, 1" SCH. 40, 90° LR, 8(2.4")([1.32/2]²π) = 26.3 in³

(39) 4, 1" SCH. 40, 45° LR, 4(2.4/2)([1.32/2]²π) = 6.6 in³

e) PINS: TOTAL LGTH = 8" (1"/2)²π = 6.3 in³

TOTAL VOLUME = 9377 in³ = 5.4 ft³

FLUOR DANIEL
NORTHWEST

DESIGN ANALYSIS

ATTACHMENT A
Calc. No. W320-27-047
Revision No. 0
Page No. 8 of

Client NUMATEC HANFORD CORP.
Subject:
Location:

WO/Job No.
Date: 03/12/97
Checked: 04/01/97
Revised:

Filename
By: MRC
By: N. J. JUPLO
By:

ESTIMATE VOLUMES: (CONT.)

6. JUMPER ASSEMBLIES (241-AY-102, PIT 02A)

a) H-2-818501: AY-02A-U11-A-(C)

(19) (21) (22) 4", $(4.5/2)^2\pi\left[(65''-12'')+(21''-6'')+(19''-12'')+(15''-6'')+6''+9.4''(3)+4.7''\right]$ = 1954.6 m^3

(5) (6) Volume 6"ø x 6" long, $(6/2)^2\pi(6)(2)$ = 339.3 m^3

(10) 2" PIPE, $(2.38''/2)^2\pi(20'')$ = 89.0 m^3

(11) 4"ø x 10 lg, $(4/2)^2\pi(10'') + 5.0$ (misc) = 130.7 in^3

TOTAL VOLUME = $\frac{2513.3\ in^3}{1728}$ = 1.5 ft^3

b) H-2-818502: AY-02A-U3-UB-B

(32) 2" PIPE, $\left[(33''-3'')+\frac{6\pi''}{4}+(43''-3'')+\frac{6\pi''}{4}+(76''-33'')\right](2.38/2)^2\pi$ = 544.6 m^3

(31) 4" PIPE, $(12'')(4.5/2)^2\pi$ = 190.9 m^3

(33) 2" PIPE (SCH 80), $(2.38/2)^2\pi(2'')$ = 8.9 m^3

(18) C3x4.1 (A=1.21 in^2)(21.5") = 26.0 m^3

(19) L2x2x1/4 (A=0.931 in^2)(2") = 1.9 m^3

(20) → (25), 18 in^3 + 3.3 + 5.3 + 4.6 + 5.1 + 1.9 = 38.2 m^3

(5) (7), $(3''/2)^2(\pi)(4'')(2)$ = 56.5

TOTAL VOLUME = $\frac{867\ m^3}{1728}$ = 0.50 ft^3

PIT 02A, TOTAL VOLUME = 2.0 ft^3

ESTIMATES VOLUMES: (cont.)

7. JUMPER ASSEMBLIES (241-AY-102, PIT 02E)

a) H-2-818503, SH. 1: AY-02E-U2-A-(B)

(55) W4x13 (A=3.83 in²), 3.83 (60"x2)	=	459.6 in³
(56) C3x4.1 (A=1.21 in²), 1.21 (73"+24")	=	117.4
(57) 3x½ x (30.5"π)	=	143.7
(58) 2½x⅜ x 2" (4)	=	7.6
(59) 1½"ø x 5⅝ (2)	=	19.9
(60) ¾"ø x 2⅝" (4)	=	4.6
(61) ½"ø x 16" (2)	=	6.3
(62) ⅜"x 3"x6"	=	6.8
(63) ⅜"x 6"x6.5"	=	14.6
(5) ⅜"x 4"x 5"	=	7.5
(6) 3⅛ø x ⅜	=	2.9
(7) 5.5 x6 x ⅜		12.4
(8) 1⅜ x 7¾ x ⅜		4.0
(9) 10"x6.5x ⅜	=	24.4
(10) 1"x 8½x8½	=	72.3
(68) (66) 4" PIPE, $(4.5"/2)^2\pi\left[46"-2"(2)+\frac{12"\pi}{4}+(18-6)+\frac{12"\pi}{4}+(45"-6")+\frac{12"\pi}{4}+(12"-6)\right]$	=	1897.0
(67) 2" PIPE, $(2.38"/2)^2\pi\,[24"]$	=	106.8
(74) 4", 300# RF, 10"ø x 1.5" (4)	=	471.2
(75) 2", 300# RF, 6.5"ø x 1.5" (4)	=	199.1
(81) (23) (5"ø x 6" + 6"ø x 4")	=	230.9
(13) 6"ø x 10" [JUMPER FLUSH BLANK HEAD]	=	282.7
(14) (6"ø x 8)(2) [CONN. VERT, 4"]	=	452.4
(15) 3"ø x 4" [NOZZLE, MALE, 2"]	=	28.2
(—) MISCELL	=	200.0

HEADER1.XLS

TOTAL VOLUME = 4772 in³ = 2.8 ft³

PIT 02E TOTAL VOLUME = 2.8 ft³ 1128

FLUOR DANIEL
NORTHWEST

DESIGN ANALYSIS

Client NUMATEC HANFORD CORP.
Subject:
Location:

WO/Job No.
Date: 03/12/97
Checked: 04/01/97
Revised:

Filename
By: MJC
By: M.J. JUPLO
By:

ESTIMATED VOLUMES: (cont.)

8. JUMPER ASSEMBLIES (241-C-106, PIT 06A)

a) H-2-818505: C-06A-9-A

(12) Comp 4" (1 Hor, 1 Vert), 6"Ø x 8 (2)	=	452.4 in³
(13) Flowmeter 4", 5"Ø x 6"	=	117.8
(15) Press Sensor, 6"Ø x 4"	=	113.1
(38) C6 x 8.2 (A = 2.4 in²), 2.4 (50")	=	120.0
(39) 1/4 x 6 x 8 (2)	=	24.0
(40)(41) 2 1/4 x 1/4 x 3 (4)	=	7.5
(43)(47) 4" sch 40, $(4.5"/2)^2\pi\left[191" - 4"(2) - (6")(3) + \frac{12\pi}{4}(3)\right]$	=	3073.9
(46) 2" sch 40, $(2.38"/2)^2\pi$ (27")	=	120.0
(48) Flange 4", 300# RF, 10"Ø x 1.5 (4)	=	471.2
(—) miscell	=	200.0

TOTAL VOLUME = $\frac{4700 \text{ in}^3}{1728}$ = **2.7 ft³**

b) H-2-818508: C-06A-B-(A)

(43) W4 x 13 (A = 3.83 in²), 3.82 (56") 2	=	429.0 in³
(44) BAR 3 x 1/2", (31") π (3")(.5")	=	146.0
(45) 2 1/2 x 3/8 x 2 (4)	=	7.5
(46) (1 1/2"Ø x 5")(2)	=	17.7
(47) (1/2 x 3 x 5)(2)	=	15.0
(50) 4" PIPE, sch 40, $(4.5/2)^2\pi$ (6")	=	95.4
(51) 2" PIPE, sch 40, $(2.38/2)^2\pi$ (10")	=	44.5
(53) Reduc EL (90°) std 4 x 2, $[(12"\pi/4)(2)(3"/2)^2\pi$	=	133.2
(54) 2" 300# RF, 6.5"Ø x 1.5 (2)	=	99.6
(55) 3" PLUG, $(3.5/2)^2\pi$ (3")	=	28.9

(cont. pg 11)

ESTIMATED VOLUMES: (CONT.)

8. b) H-2-818508 : C-06A-B-(A)

(6) 4, (3/8 x 1 3/8 x 7.75)4	=	16.0
(7) 2x, 3/8 x 6.5 x 16"	=	48.8
(8) 1x, 1 1/2 x 9.5	=	14.3
(9) 1x, 1/2 x 7 x 7	=	24.5
(11) 4x, 3/4"Ø x 3.5	=	6.2
(14) Conn. vent 4"	=	452.4
(15) NOZZLE MATCH", (4.5/2)^{2}π (6")	=	95.4
(17) 12 1/2 x 9"Ø,	=	31.8
(21) → (32) 6" x 6" x 6" (misc.)	=	216.0

TOTAL VOLUME = $\frac{1922}{1728}$ = **1.1 ft^3**

PIT 06A, TOTAL VOLUME = **3.8 ft^3**

FLUOR DANIEL
NORTHWEST

DESIGN ANALYSIS

Client NUMATEC HANFORD CORP.
Subject:
Location:

WO/Job No.
Date: 03/12/97
Checked: 04/01/97
Revised:

Filename
By: MKC
By: N.J. JUPLO
By:

ESTIMATES VOLUMES: (cont.)

9. JUMPER ASSEMBLIES: (PIT 06C)

a) H-2-818515: C-06C-6-A

(5)(6) 4" conn. 2, $[(6''\varnothing/2)^2\pi \times 8'']2$ = 452.4 in³
(8) LIFTING BAIL, 1/2"ø x 33" lg, = 6.5
(12) 1/4 x 6 x 6, = 9.0
(17) 4" PIPE SCH. 40, $(4.5/2)^2\pi\left[56 + \frac{12\pi}{4}(2)\right]$ = 1190.4

TOTAL VOLUME = $\frac{1658 \text{ in}^3}{1728}$ = 1.0 ft³

b) H-2-818516: C-06C-8-B

(5)(6) 3" conn. (2), $[(5''\varnothing/2)^2\pi \times 6'']2$ = 235.6
(8) BAIL = 6.5
(12) 1/4 x 5 x 5 = 6.3
(17) 3" PIPE SCH. 40, $(3.5/2)^2\pi\left[39 + \frac{9\pi}{4}(2)\right]$ = 511.2

TOTAL VOLUME = $\frac{759.6 \text{ in}^3}{1728}$ = 0.4 ft³

PIT 06C, TOTAL VOLUME = 1.4 ft³

FLUOR DANIEL
NORTHWEST

DESIGN ANALYSIS

Client NUMATEC HANFORD CORP.
Subject:
Location:

WO/Job No.
Date: 03/12/97
Checked: 04/01/97
Revised:

Filename
By: MKC
By: N.J. JUFLO
By:

AIR FLOW AREA(S): (PIT TO TANK)

1. 241-C-106, PIT 06A (H-2-818522, SH. 1)

PENETRATION No.	SIZE	
R-5	4"Ø	SEALED (SHIELD PLUG W/GASKET)
R-6	12"Ø	(EXISTING PUMP PTX141 IN PLACE)
R-7	12"Ø	SEALED (FLANGE CAP)
R-9	36"Ø	(WINCH/PUMP ASSEMBLY W/6"Ø HOLE)
FLOOR DRAIN (SUMP)	—	PUMP HOSE DRAIN TO 6" WINCH HOLE

2. 241-C-106, PIT 06C (H-2-818523, SH.1)

PENETRATION No.	SIZE	
R-3	12"Ø	(SLUICER W/6"Ø HOLE)
R-4	4"Ø	SEALED (SHIELD PLUG W/GASKET)
FLOOR DRAIN (SUMP)	—	PUMP HOSE DRAIN TO 6" SLUICER HOLE

3. 241-AY-102, PIT 02A (H-2-818542)

PENETRATION No.	SIZE	
RISER	42"Ø	(DISTRIBUTOR W/6"Ø HOLE)
FLOOR DRAIN	4"Ø	SEALED

4. 241-AY-102, PIT 02E (H-2-818543, SHT 1 & 2)

PENETRATION No	SIZE	
RISER	34"Ø	(WINCH/PUMP ASSEMBLY W/6"Ø HOLE)
FLOOR DRAIN	4"Ø	SEALED

FLUOR DANIEL
NORTHWEST

DESIGN ANALYSIS

Client NUMATEC HANFORD CORP.
Subject:
Location:

WO/Job No.
Date: 03/12/97
Checked: 04/01/97
Revised:

Filename
By: MRC
By: N.J. JUPLO
By:

AIR FLOW AREAS: PIT TO AIR

1. 241-C-106, PIT 06A (H-2-818448 SHT 1 THRU 5)

	CONDITION/in²
a) 3 - 8"Ø CAMERA PORTS,	SEALED (SHIELD PLUG W/GASKET
** b) 1 - 3"Ø VALVE PORT,	SEALED (SHIELD PLUG W/GASKET)
c) 1 - 6"Ø WINCH PORT SLEEVE: A = (6"/2)²π - (1"/2)²π - (3" x 6") =	9.5 in²
d) 2 - SLOTS (ELECTRIC)	SEALED
* e) 2 - COVER BLOCK GAPS (NORTH SIDE) A = (.75" x 6")(2)	9 in² (MAX), (IF NOT TAPED)
* f) 2 - COVER BLOCK GAPS (SOUTH SIDE) A = (.75" x 8")(2)	12 in² (MAX), (IF NOT TAPED
g) EXIST. 12" RISER	SEALED
h) PUMP PENETRATION	SEALED (SHIELD PLUG W/GASKET)

(*) DURING SLUICING OPERATION, THESE GAPS WOULD BE TAPED ELIMINATING THIS AREA FOR AIR TO FLOW.

(**) ALWAYS OPEN

MAX. 9 + 12 + 9.5 = 30.5 in²
MIN. 0 + 0 + 9.5 = 9.5 in²

FLUOR DANIEL
NORTHWEST

DESIGN ANALYSIS

Client NUMATEC HANFORD CORP.
Subject:
Location:

WO/Job No.
Date: 03/12/97
Checked: 09/01/97
Revised:

Filename
By: MRC
By: N. J. JUPLO
By:

AIR FLOW AREA(S): PIT TO AIR

2. 241-C-106, PIT 06C (H-2-818450 SH. 1 thru 3)

	CONDITION/in^2
a) 3"Ø VALVE PORT,	SEALED (SHIELD PLUG W/GASKET)
b) 8"Ø CAMERA PORT	"
c) 12"Ø SLUICER PORT.	SEALED
* d) 1-COVER BLOCK GAP (NORTH END), MAX. GAP WIDTH = 1 1/4" X 8"	10 in^2 (IF NOT TAPED)
e) SLOT PLUG (ELECT. CABLES ETC)	SEALED (SHIELD PLUG W/GASKET)
* f) 1-COVER BLOCK GAP (SOUTH END), MAX GAP WIDTH = 1 1/4" x 6"	7.5 in^2 (IF NOT TAPED)

* DURING SLUICING OPERATION THESE GAPS WOULD BE TAPED ELIMINATING THIS AREA FOR AIR TO FLOW.

MAX. = 10.0 + 7.5 = 17.5 in^2
MIN. = 0 BUT ASSUME = 1.0 in^2
(DUE TO INCOMPLETE SEALING)

FLUOR DANIEL
NORTHWEST

DESIGN ANALYSIS

Client	NUMATEC HANFORD CORP.	WO/Job No.	Filename
Subject:		Date: 03/12/97	By: MRC
		Checked: 04/01/97	By: N. J. JUPLO
Location:		Revised:	By:

AIR FLOW AREAS: PIT TO AIR

3. 241-AY-102, PIT 02A (H-2-818453, SHTS 1 THRU 3)

	CONDITION/in^2
a) (1) - 14"Ø PENETRATION	SEALED (SHIELD PLUG W/GASKET)
b) (2) - 3"Ø PENETRATIONS	ASSUME 1/16" GAP AROUND PERIMETER OF 3" HOLE = 0.30 in^2 x 2 = 0.6 in^2
c) (1) - 8½"Ø PENETRATION	SEALED (SHIELD PLUG)
d) (1) - 6½Ø PENETRATION	TEE WRENCH /
* e) 2 - COVER BLOCK GAPS (EAST/WEST), ½" x 107" (2) = 107 in^2	OPEN / 107 in^2 (TOTAL)
f) NEW PENETRATION (ECN FOR DRAIN SEAL) (3"Ø CORE - 2⅞"Ø INSTALLED DEVICE) A = 0.6 in^2	A_{GAP} = 0.6 in^2

* DURING SLUICING OPERATION THESE GAPS WOULD BE TAPED ELIMINATING THIS AREA FOR AIR TO FLOW, ALSO THE GAP AT THE PERIMETER WOULD BE SEALED.

NOTE: CURRENTLY THE TOP OF THE COVER BLOCKS IS COVERED WITH 3/4" LEAD SHEETING.

MAX = 0.6 + 107 + 0.6 = 108.2 in^2
MIN = 0.6 + 0 + 0.6 = 1.21 in^2

$= \frac{\pi(d_2^2 - d_1^2)}{4}$

FLUOR DANIEL
NORTHWEST

DESIGN ANALYSIS

Client NUMATEC HANFORD CORP.
Subject:
Location:

WO/Job No.
Date: 03/12/97
Checked: 04/01/97
Revised:

Filename
By: MRC
By: N.J. JUPLO
By:

AIR FLOW AREAS: PIT TO AIR

4. 241-AY-102, PIT OZE (H-2-818454, SHT. 1 THRU 4)

	CONDITION/ in^2
a) 36"Ø PUMP PENETRATION	SEALED (SHIELD PLUG W/GASKET)
b) 12"Ø VALVE OPERATING PORT	SEALED (SHIELD PLUG W/GASKET)
c) (2)-8"Ø CAMERA PORTS	SEALED (SHIELD PLUG W/GASKET)
** d) 6"Ø WINCH DRIVE PORT $(6''/2)^2\pi - (1''/2)^2\pi - (3'' \times 6'') =$	$9.5\ in^2$
e) (3)- SLOTS (ELECT WIRING ETC)	SEALED
* f) 1- COVER BLOCK GAP (NORTH SIDE), 1.25" X 7.25"	$9.1\ in^2$ MAX. (IF NOT TAPED)
* g) 1- COVER BLOCK GAP (SOUTH SIDE), 1.25 X 8.25"	$10.3\ in^2$ MAX. (IF NOT TAPED)

* DURING SLUICING OPERATION, THESE GAPS WOULD BE TAPED ELIMINATING THIS AREA FOR AIR FLOW.

** ALWAYS OPEN

MAX = 9.5 + 9.1 + 10.3 = $28.9\ m^2$
MIN = 9.5 + 0 + 0 = $9.5\ m^2$

DISTRIBUTION SHEET

To	From	Page 1 of 1
Distribution	JW Bailey	Date 24 July 1998
Project Title/Work Order		EDT No. 622235
Project W-320 Tank 106-C, HNF-2477, Piping Calculations, Vol. 7		ECN No. n/a

Name	MSIN	Text With All Attach.	Text Only	Attach./ Appendix Only	EDT/ECN Only
JW Bailey	S2-48				
W-320 Project Files	R1-29				