JUL 24 1998
STATION 4 25 2

ENGINEERING DATA TRANSMITTAL

Page 1 of 1

1. EDT 622233

2. To: (Receiving Organization) Distribution	3. From: (Originating Organization) TWRS Projects/SST Retrieval	4. Related EDT No.: n/a
5. Proj./Prog./Dept./Div.: D2991 W-320 TWRS/TCPN # ~~D2MA1~~	6. Design Authority/ Design Agent/Cog. Engr.: JW Bailey, NHC	7. Purchase Order No.: n/a
8. Originator Remarks: For approval and release of a new supporting document. This document has been generated to ensure retrievability of the Project W-320 "Piping Calculations, Vol. 5".		9. Equip./Component No.: n/a
		10. System/Bldg./Facility: 241-C-106
11. Receiver Remarks: 11A. Design Baseline Document? [X] Yes [] No		12. Major Assm. Dwg. No.: n/a
		13. Permit/Permit Application No.: n/a
		14. Required Response Date:

15. DATA TRANSMITTED

(A) Item No.	(B) Document/Drawing No.	(C) Sheet No.	(D) Rev. No.	(E) Title or Description of Data Transmitted	(F) Approval Designator	(G) Reason for Transmittal	(H) Originator Disposition	(I) Receiver Disposition
1	HNF-2475	-	0	Project W-320, 241-C-106 Sluicing, Piping Calculations, Vol. 5	NA			-

16. KEY

Approval Designator (F)	Reason for Transmittal (G)		Disposition (H) & (I)	
E, S, Q, D or N/A (see WHC-CM-3-5, Sec.12.7)	1. Approval 2. Release 3. Information	4. Review 5. Post-Review 6. Dist. (Receipt Acknow. Required)	1. Approved 2. Approved w/comment 3. Disapproved w/comment	4. Reviewed no/comment 5. Reviewed w/comment 6. Receipt acknowledged

17. SIGNATURE/DISTRIBUTION
(See Approval Designator for required signatures)

(G) Reason	(H) Disp.	(J) Name	(K) Signature	(L) Date	(M) MSIN	(G) Reason	(H) Disp.	(J) Name	(K) Signature	(L) Date	(M) MSIN
2	1	Design Authority	JW Bailey	7/23/98	S2-48						
		Design Agent	MC Davenport	7/23/98							
2	1	Cog.Eng.	~~CE Graves~~		S2-48						
2	1	Cog. Mgr	JW Bailey	7/23/98	S2-48						
		QA									
		Safety									
		Env.									

18.	19.	20.	21. DOE APPROVAL (if required)
MC Davenport ~~CE Graves~~ ~~3/24/98~~ 7/23/98 Signature of EDT Originator Date	Authorized Representative for Receiving Organization Date	JW Bailey ~~3/24/98~~ 7/23/98 Design Authority/ Cognizant Manager Date	Ctrl. No. [] Approved [] Approved w/comments [] Disapproved w/comments

BD-7400-172-2 (05/96) GEF097

BD-7400-172-1

Project W-320, 241-C-106 Sluicing Piping Calculations, Vol. 5

John W. Bailey
Numatec Hanford Co., Richland, WA 99352
U.S. Department of Energy Contract DE-AC09-96RL13200

EDT/ECN: 622233 UC: 506
Org Code: 8C452 Charge Code: D2991/HANA0600
B&R Code: EW3130010 Total Pages: 195

Key Words: W-320, Sluicing, Tank 241-C-106, Tank 241-AY-102, WRSS, calculations, piping.

Abstract: This supporting document has been prepared to make the FDNW calculations for Project W-320, readily retrievable.

TRADEMARK DISCLAIMER. Reference herein to any specific commercial product, process, or service by trade name, trademark, manufacturer, or otherwise, does not necessarily constitute or imply its endorsement, recommendation, or favoring by the United States Government or any agency thereof or its contractors or subcontractors.

Printed in the United States of America. To obtain copies of this document, contact: Document Control Services, P.O. Box 950, Mailstop H6-08, Richland WA 99352, Phone (509) 372-2420; Fax (509) 376-4989.

JUL 24 1998
DATE:
HANFORD RELEASE
STA: 4
ID: 25

Release Approval 7/24/98 Date

Release Stamp

Approved for Public Release

Project W-320, 241-C-106 Sluicing Piping Calculations, Vol. 5

TABLE OF CONTENTS

Calc. No.	Title	Page
W320-27-028	Miscellaneous Pipe Stress Analysis	A-i
W320-27-029	AY Farm Jumper Stress Analysis	B-i
W320-27-030	W320 Tank 241-C-106 HVAC Seal Loop	C-i
W320-27-031	Booster Pump Restraint Analysis	D-i

W320-27-028

Miscellaneous Pipe Stress Analysis

ICF KAISER HANFORD COMPANY	CALCULATION IDENTIFICATION AND INDEX	Page i of iii Date 8 / 22 /95

This sheet shows the status and description of the attached Design Analysis sheets.

Discipline 27,Piping and Vessels WO/Job No. ER4319 Calculation No. W320-27-028

Project No. & Name Project W-320 Waste Retrieval for Tank 241-C-106

Calculation Item Miscellaneous Pipe Stress Analysis

These calculations apply to:

Dwg. No. H-2-818482 Sheets 1, 2, and 3 Rev. No. 0

Dwg. No. ES-320-M07, ES-320-M08 Rev. No. 0

Other (Study, CDR) Rev. No.

The status of these calculations is:

- ☐ Preliminary Calculations
- ☒ Final Calculations
- ☐ Check Calculations (On Calculation Dated)
- ☐ Void Calculation (Reason Voided)

Incorporated in Final Drawings? ☒ Yes ☐ No

This calculation verified by independent "check" calculation? ☐ Yes ☒ No

Original and Revised Calculation Approvals:

	Rev. 0 Signature / Date	Rev. 1 Signature / Date	Rev. 2 Signature / Date
Originator	D. L. Stone 8/22/95	Kelly Kittagare 12/1/97	
Checked by	CD Jones 9/22/95	M. Ahmed 3.23.98	
Approved by	CD Jones 9/22/95	D L Evans 4/8/98	
Checked Against Approved Vendor Data		M. Ahmed 4.10.98	

INDEX

Design Analysis Page No.	Description
i - ii	Calculation Identification and Index
iii	Calculation Cross Index
1 - 4	Objective, Design Criteria ,Design Inputs
5	Assumptions, Calculations and Conclusions
6	References

INDX-M.XLS

ICF KAISER HANFORD COMPANY	CALCULATION IDENTIFICATION AND INDEX	Page ii of iii Date 8 / 22 /95

Discipline 27, Piping and Vessels WO/Job No. ER4319 Calculation No. W320-27-028

	Rev. 0 Signature / Date	Rev. 1 Signature / Date	Rev. 2 Signature / Date
Originator	DL Stout 8/22/95	Kelly Kittenger 12/1/97	
Checked by	CD Jones 9/22/95	M. Ahmed 3.19.98	

INDEX

Design Analysis Page No.	Description
7 & 8	Sustained Loading Analyses
9	Summary of Encasement Pipe Expansions and and Bend Stresses
10 & 11	Anchor Loads at Pit Wall Penetrations
Appdx A	Stress Isometric and Sketches derived from project drawings
Appdx B	STAB Results Filenames:SB90M8-S.mcd & SB45M8-T.mcd
Appdx C	Autopipe Results Filename: M7-R0.out

Rev. 1: Verify As-Built conditions.
Pages i, ii, iii, 1, 5, and 6 revised.

INDX-M.XLS

CALCULATION CROSS INDEX (Typical)

Subject Calculation No. W320-27-028

Page iii of iii

Subject Calculation Revision No.	Superceded by Calculation No.	These interfacing calculation/documents provide input to the subject calculation, and if revised may require revision of the subject calculation.		Results and conclusions of the subject calculation are used in these interfacing calculations and/or documents.		Does the output interface calculation/ documents require revision?		Has the output interface calculation/ documents been revised?		Discipline manager's signature and date indicating evaluation complete.	
		Calcualtion/Document No.	Revision. No.	Calcualtion/Document No.	Revision. No.	Yes	No	Yes	No		
0	NA	Dwg.# ES-320-M07	0	NA			X		X		
0	NA	Dwg.# ES-320-M08	0	NA			X		X		
1	NA	H-2-818482, sht 1	1	NA			✓		✓		
1	NA	H-2-818482, sht 2	1				✓		✓	7/20/98	Donny L. Evans
1	NA	H-2-818482, sht 3	0	⚠			✓		✓		
1	NA	H-2-818521, sht 1	1				✓		✓		
1	NA	H-2-818546, sht 1	1				✓		✓		

KEH 1975.00 (12/88)

DESIGN ANALYSIS

Client WESTINGHOUSE HANFORD COMPANY
Subject MISCELLANEOUS PIPING STRESS ANALYSIS
PROJECT W-320 WASTE RETRIEVAL for TANK 241-C-106
Location C TANK FARM - 200 EAST AREA - HANFORD

WO/Job No. ER4319
Date 8 / 22 / 95
Checked 9/22/95
Revised 12/1/97

Filename TEXT-M.WP
By D.L.STONE
By CD Jones
By K. Hayase

CHK'D BY: M. Ahmed 3.23.98

OBJECTIVE:

The objective of this calculation is:

1. To perform static and dynamic stress analysis of the Drain Pipeline servicing Tanks 241-C-106 in order to be in compliance with the Code ASME B31.3 requirements.

2. To calculate the pipe anchor loads at building penetrations in order to transmit these loads to Civil / Structural group.

DESIGN CRITERIA:

1. ASME CODE B31.3-93 with Addenda up to 1994.
2. SDC 4.1, REV-11. (Now FDNW Practice # 134.21.5.12.17)
3. PROJECT W-320 FDC: WHC-SD-W320-FDC-001, REV. ~~2~~ 4 △1

DESIGN INPUTS:

1.	Ambient temperature	40°F	(Ref. 11)
2.	Pipe Wall	Schedule 40	(Ref. 16)
3.	Encasement Pipe material:	ASTM A53 Type E Grade B, Seamless	(Ref: 16)
4.	Process Pipe Materials:	ASTM SA 312 TP304L Stainless Steel	(Ref: 16)
5.	Corrosion rate:	2 mils/yr, for 20 years (considered as 0.06)	(Ref: 19)
6.	Safety Class category:	SC-2 (2 yr life, conservative, ok as is)	(Ref: 15) △1
7.	Pipe mechanical properties:	(See second page of "STAB", Appx. B)	(Ref: 3)
8.	Soil characteristics:	(See third page of "STAB", Appx. B)	(Ref: 12)
9.	Design Pressure:	60 psig	(Ref: 16)
10.	Design Temperature:	100°F	(Ref: 16)
11.	Process Fluid	Waste Solids blown from metal filters	(Ref: 20)
12.	Specific gravity	1.25 (conservative)	(Ref: 11)
13.	Piping Dimensions	Drawings ES-320-M07 and ES-320-M08 (Composite sketches from these drawings have been provided in Appendix A.)	(Ref: 20)

DESIGN METHODOLOGY:

The calculation includes analysis of the encased drain line connecting the Process Air Building Seal Pot and Floor Drain with the Tank 241-C-106 Sluice Pit 241-C-06C through Nozzle U-8. (Ref: 20)

The stress analysis includes the following :

1. Analysis of the buried (outer) encasement piping for sustained, seismic and thermal loading under the impact of soil friction in order to qualify for Code B31.3-90 requirements. The analysis is performed using the computer program "STAB" (Ref: 7) which is based on the principles promulgated in ASME Papers (Ref: 5 & 6).

   The Safety Class designation of the encasement pipe is dependent upon the designation of the Primary process pipe inside the encasement pipe, and is therefore categorized as Safety Class-2 (Ref: 2) pipe.

2. Analysis of the primary (inner) process piping for sustained, thermal and seismic loading is performed using the computer program "AutoPipe" Version-4.5 by "Engineering Design Automation" (EDA). (Ref:8)

   Seismic & thermal displacements for the encasement pipe elbows, determined by the "STAB" (Ref: 7), are checked and tabulated to ensure minimal impact on the Primary pipe.

   The Primary process pipe of each line is categorized as Safety Class-2 (Ref: 15) pipe.

3. Pipe Loading at Building Penetration Anchors is summarized using spreadsheet program, "Excel" (Ref. 9.)

SUSTAINED LOADS:

ENCASEMENT PIPE

The dead load for the encasement pipe is considered to include the weight of the inner primary pipe, the weight of its contents, and the weight of the soil cover over the encasement pipe. The weight of the encasement pipe is not a significant factor since it is supported continuously by the surrounding soil.

The AASHTO, H20 live loads (Ref: 4) are considered to include the impact of the surface vehicles moving over the buried encasement pipe. (Page 7 & 8)

The encasement pipe longitudinal stress due to the sum of the dead loads and live loads is calculated and added to the summation of pressure stress & seismic stress obtained from the computer program "STAB" (Ref: 7). (Page 9)

The pressure stress for the outer encasement pipe is considered similar to that of the primary pipe in order to ensure operability if the primary pipe fails.

PRIMARY PIPE

The sustained stress on the inner primary pipe is the summation of longitudinal stresses resulting from internal pressure and the dead weight of the pipe. The pipe material is stainless steel ASME SA 312, Grade TP 304L whose Allowable stress "S" Per Code B31.3 is 16,700 psi. (Ref: 1)

The "AutoPipe" program checks the sustained stress in the primary pipe against Code Allowable. (Ref: 8).

SEISMIC STRESSES:

ENCASEMENT PIPE

The buried encasement pipe elbow stresses due to propagation of ground seismic waves are computed using the computer program "STAB" (Ref: 7) which has been programmed based on the principles promulgated in ASME Papers (Ref: 5 & 6).

The peak free field acceleration factor (ag) of "0.12g" and peak free field ground velocity of "48Xag" are considered as stipulated in SDC 4.1, Rev-11 (Ref: 2) for Safety Class 2 & 3 piping.

The pipe mechanical properties are obtained from "Crane Technical Paper" (Ref: 3).

The soil data for dynamic analysis is based on the report were obtained from the Shannon & Wilson Inc's "Geotechnical Engineering Studies" (Ref:12)

Since the depth of the soil cover varies at different locations and since shallower depths produces higher stresses in pipe bends, the minimum required depth for shielding (Ref:14) three feet is used as the basis in this analysis.

Since the seismic stresses do not occur concurrently in both pipe legs around the elbow, the elbow will be subjected to seismic stress from only one leg at a time. As such, seismic analysis is performed for the longest straight pipe run adjacent to each pipe bend.

The sustained and seismic stresses are added together and compared to the Code B31.3 allowable requirements for Sustained + Occasional stresses. These stresses are summarized on page 9. The maximum seismic displacements at pipe bends are also listed on page 9.

PRIMARY PIPE

Since the Primary pipe has been classified as Safety Class 2 Pipe in the FDC (Ref: 11), Dynamic analysis is performed using "Fig 5" seismic response spectra (5% Damping) of SDC 4.1, Rev-11. (Ref: 2) This response spectra has been created in "AutoPipe" as "SC2&3" and is used in dynamic analysis.

The seismic stresses from the dynamic analysis are added to the sustained stresses from the static analysis to qualify against ASME B31.3 occasional stress allowable 1.33Sh. (Ref.1)

The encasement pipe seismic movements (See page 9) are negligibly small and will not have any significant impact on the primary pipe stress analysis. Therefore, these movements are not considered.

THERMAL (DISPLACEMENT) STRESS:

ENCASEMENT PIPE

The thermal analysis for the Encasement pipe is performed at the same temperature as it is for the Primary pipe (100° F) to ensure operability in case primary pipe fails. Soil static properties were obtained from the "Geotechnical Engineering Studies" report furnished by the Shannon & Wilson Inc (Ref: 12).

The computer program "STAB" is used to perform the thermal analysis and compute the stresses in each pipe leg around each pipe bend. Since thermal stresses in each leg occur concurrently, "STAB" adds these stresses together to compute total thermal stress at the pipe bend and qualify it for Code B31.3 Allowable thermal stress. Results are summarized on page 9 . Thermal displacements at the pipe bends are also listed on pages 9 . The effects of thermal displacement at guide locations were checked and since support displacements of less than 0.063 inches are not considered critical, the analysis has been omitted from this package. (See Page 9)

The maximum design temperature for the Primary pipe is 100°F in accordance with the project construction specification (Ref: 16) and has been considered in the "AutoPipe" program.

PRIMARY PIPE

Since the primary pipe is intermittently welded to the encasement pipe, the thermal movements of the encasement pipe have been taken into consideration in the primary pipe thermal analysis.

The "AutoPipe" program has been run to qualify the thermal stress to Code B31.3 allowable for displacement stress "Sa". (Ref: 1)

The thermal expansion of the Primary pipe at any bend obtained from Autopipe is found to be less than the gap available between the primary pipe and the encasement pipe.

SOIL CHARACTERISTICS:

The "Geotechnical Engineering Studies" report by Shannon & Wilson Inc, (Ref: 12 Tables 2 & 3) furnishes characteristics for both Natural sand and Backfill sand. Since the "STAB" test run made using the properties of the Natural sand produces higher stresses in pipe bend than that of the test run using the properties of the Backfill sand, Natural sand properties are used conservatively for entire seismic and thermal analysis.

COMBINED LOADING AT BUILDING PENETRATION ANCHORS

The spreadsheet program, "Excel" (Ref. 9), has been used to calculate Pipe Loading at Building Penetration Anchors. (Pages 10 & 11 .) Seismic and thermal loads on an anchor by the Encasement Pipe are calculated by multiplying the soil friction force for the underground pipe (obtained from the corresponding "STAB" calculations) by the length of pipe attached to the anchor. For cases in which the effects of loading by the Inner Process Pipe and Encasement Pipe are concurrent (such as pit wall penetrations), anchor loading is considered as the sum of the Inner Pipe restraint reactions at the anchor (obtained from "Autopipe" analysis) plus the calculated Encasement seismic and thermal loads. For cases in which the effects of loading by the Inner Process Pipe and Encasement Pipe are not concurrent (such as at the Process Air Building Floor Drain Seal Pot), anchor loads are represented in the spreadsheet, separately. (See Appx. A, Dwg.# H-2-818482)

Client WESTINGHOUSE HANFORD COMPANY WO/Job No. ER4319 Filename TEXT-M.WP
Subject MISCELLANEOUS PIPING STRESS ANALYSIS Date 8 / 22 / 95 By D.L.STONE
PROJECT W-320 WASTE RETRIEVAL for TANK 241-C-106 Checked 9/22/95 By CD Jones
Location C TANK FARM - 200 EAST AREA - HANFORD Revised 12/ 1 /97 By K. Hayase

CHKD BY: M. Ahmed 3.23.98

ASSUMPTIONS:

1. Since "Geotechnical Engineering Studies" by Shannon & Wilson Inc (Ref:12, Sect 12.1) indicates that the geological hazards such as ground faulting, soil liquefaction, ground differential settlements, land slides, ground collapse potential and flooding either not pertinent or insignificant to the native soil encompassing W-320 project, these hazards are not considered in the analysis.

2. The building structures are adequate to withstand the pipe loads.

3. The impact of building permanent settlements, if any, will be mitigated by designing voids between the pipe and the soil, so that the pipe will move in tandem with the building and will not be restrained by the soil.

CALCULATIONS:

Sustained load analysis (Pages 7 & 8)

Summary of Encasement Pipe Expansions and Pipe Bend Stresses for: (Page 9)

Pipe Loads at Building Wall Penetrations for: (Pages 10 & 11)

See Appendices for seismic & thermal analysis by "STAB" program. (Appx. B)

See Appendices for AutoPipe analysis. (Appx. C)

CONCLUSION:

1. The results of the "STAB" analyses indicate that sustained, seismic and thermal stresses in the Encasement Pipe have met the Code B31.3-1990 requirements.

2. The review of the "AutoPipe" summary results indicates that pipe stresses are in compliance with ASME Code B31.3 requirements.

3. Building penetration anchor loads are calculated and listed on pages 10 & 11.

Rev. 1

Rev. 1 of this calculation verified the analysis against the as-built conditions. There are minor dimensional differences (± 1') between the analysis and the as-built conditions, however, these differences are negligible. There are differences in pipe bend radii, however, these are also negligible. ⚠

REFERENCES:

CHKD BY: R. Ahmed 3.23.98.

1. ASME Code B31.3 and B31.3a-1994 Addenda for "Chemical and Petroleum Refinery."

2. SDC 4.1, Rev. 11, "Standard Architecture & Civil Design Criteria."
(Now FDNW Practice # 134.215.1217, Design Loads for Facilities) △1

3. Crane Technical Paper No: 410, 22nd Printing-1986.

4. AISI "Modern Sewer Design" First Edition, 1980.

5. ASME PAPER on "Hand Calculation of Seismic & Thermal Stresses in Buried Pipe" by G.C.K. Yeh. PVP Volume-77, June' 1983.

6. ASME PAPER on "Flexibility analysis of Buried Pipe" By E. C. Goodling. PVP Volume-82, June, 1978

7. Computer Program "STAB" (Seismic and Thermal analysis of Buried Piping), Version-0

8. Computer application "AutoPipe" Version 4.5 by "Engineering Design Automation."

9. Computer application "Excel" Version 4.0, by Microsoft.

10. Computer application "Mathcad" Version 4.0, by Mathsoft, Inc.

11. WHC-SD-W320-FDC-001, Rev-~~2~~ 4. "Functional Design Criteria for Tank 241-C-106 Waste Retrieval, Project W-320". △1

12. Shannon & Wilson Inc. Geotechnical and Environmental Consultants, "Final Report of Geotechnical Engineering Studies, W-320 Waste Retrieval and Sluicing Systems", Dated April 12, 1994.

13. *Data Compendium*, Bruce A. Castaing

14. Calculations #W320-33-004, "Earth Cover Shielding Thickness for C-farm Piping", Dated: April 12, 1994. (DSI from G.J.Peter dated April 12,1994)

15. WHC-SD-WM-SEL-033, Rev-1. "Safety Equipment List for 241-C-106 Waste Retrieval, Project W-320"

16. Project W-320 Construction specifications W320-C1 Rev-0 for piping materials.

17. Drawing # H-2-818482

18. Calculation No: W030-034 Rev-0 for "Recirculation Building - Foundation."

19. Calculation No: W-030-011, Rev-1 for "Fouling factor and Corrosion rate."

20. Piping Stress Isometric drawings: ES-320-M07 and ES-320-M08

DESIGN ANALYSIS

Client	WESTINGHOUSE HANFORD COMPANY	WO/Job No.	ER4319	Filename	HOOP.MCD
Subject	MISCELLANEOUS PIPING STRESS ANSLYSIS	Date	8 / 22 / 95	By	D.L. STONE
	PROJECT W-320 WASTE RETRIEVAL for TANK 241-C-106	Checked	9 / 22 / 95	By	
Location	C TANK FARM - 200 EAST AREA HANFORD	Revised		By	

TOTAL SUSTAINED LOADING ANALYSIS

for 3" in 6" drain Pipes (ES-320-M7 and ES-320-M8)

The purpose of this calculation is to determine the total sustained stress (weight of the process pipe and its contents, overlying soil column weight and impact of surface vehicular weight) on the transfer line encasement pipe. This value will be added to the stresses computed by STAB to determine the maximum stress on the encasement.

Unit Initialization:

$PSF := \frac{lbf}{ft^2}$ — Unit representing weight per square foot.

PROCESS PIPE AND CONTENTS

$SpG := 1.25$ — Specific Gravity of Process Fluid.

$w_{H2O} := 3.2 \cdot PSF$ — Weight of water per linear foot of 3" Schedule 40 pipe. Ref. 3

$w_{pipe} := 7.58 \cdot PSF$ — Weight of pipe per linear foot of 3" Schedule 40 pipe. Ref. 3

$w_{contents} := w_{H2O} \cdot SpG$ — Weight of Process Fluid per Linear foot of 3" Schedule 40 pipe.

$W_1 := w_{pipe} + w_{contents}$

$W_1 = 11.58 \cdot PSF$ — Weight of Process Pipe and Contents per linear foot of 3" Schedule 40 pipe.

OVERLYING SOIL

$H := 3 \cdot ft$ — Soil depth. (Minimum required for shielding.)

$\rho := 0.066 \cdot \frac{lbf}{in^3}$ — Static Specific Weight of Soil

$W_2 := H \cdot \rho$

$W_2 = 342.144 \cdot PSF$ — Weight of soil overlying Encasement per linear foot of 6" Schedule 40 pipe.

DESIGN ANALYSIS

Client	WESTINGHOUSE HANFORD COMPANY	WO/Job No.	ER4319	Filename	HOOP.MCD
Subject	MISCELLANEOUS PIPING STRESS ANSLYSIS	Date	8 / 22 / 95	By	D.L. STONE
	PROJECT W-320 WASTE RETRIEVAL for TANK 241-C-106	Checked	9/22/95	By	CDJones
Location	C TANK FARM - 200 EAST AREA HANFORD	Revised		By	

$DL := W_1 + W_2$

$DL = 353.724 \cdot PSF$

DEAD LOAD (Weight of the process pipe and its contents and overlying soil per linear foot of pipe).

$LL := 600 \cdot PSF$

LIVE LOAD AASHTO, H-20 Hwy Load per linear foot of pipe .

$P := DL + LL$

$P = 953.724 \cdot PSF$

TOTAL SUSTAINED LOAD per square foot, per linear foot of pipe.

$P = 6.623 \cdot psi$

TOTAL SUSTAINED LOAD per square inch, per linear foot of pipe.

$D_6 := 6.625 \cdot in$

Encasement Diameter for 6" Bends.

$t_6 := 0.280 \cdot in$

Wall thickness of 6" Schedule 40 pipe, Bends.

$$S_6 := P \cdot \frac{D_6}{2 \cdot t_6}$$

$S_6 = 78.353 \cdot psi$

Ring Compression (Hoop stress).

SUMMARY OF ENCASEMENT PIPE EXPANSIONS

(Process Drain Line ES-320-M7 & ES-320-M8 Appdx. D)

Nodepoint	SEISMIC	THERMAL	
	δ (inches)	δ t (inches)	δ 1 (inches)
E09	0.047		
E04		0.066	0.047

SUMMARY OF ENCASEMENT PIPE BEND STRESSES

	SEISMIC				THERMAL	
NODE POINT	PR + SEIS (psi) (STAB)	DEAD WT. (psi) (Page # 14)	TOTAL (psi)	ALLOWABLE (psi)	ACTUAL (psi)	ALLOWABLE (psi)
E09	5725	78	5803	22610		
E04					5797	49650

Client WESTINGHOUSE HANFORD CO.
Subject MISCELLANEOUS PIPING STRESS ANALYSIS
PROJECT W-320 WASTE RETRIEVAL for TANK 241-C-106
Location C TANK FARM 200 EAST AREA

WO/Job No. ER4319
Date / 8 / 22 / 1995
Checked 9/22/95
Revised

Filename ANCOR.xls
By D. L. STONE
By CD Jones
By

ANCHOR LOADS AT PIT WALLS

Nozzle: U-8 Location: 241-C-06C Sluice Pit	Pipe Loads	Pipe Length (*2) (in.)	Friction Force (*3) (lb/in)	Fx (lbs)	Fy (lbs)	Fz (lbs)	Mx (in-lb)	My (in-lb)	Mz (in-lb)
	Inner Pipe								
Identification: W-320 Process Air Bldg. Floor Drain Piping	(Seismic)			114	13	27	804	3120	396
	(adjusted See *6)			100		100	848		848
	(Thermal)			903	-106	138	3240	21348	2028
	(adjusted See *6)			736		736	3724		3724
	(*1)								
Node #: B14	**Encasement**								
Orientation: (*6) 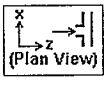	(Seismic) (*4)	L = 88	F1 = 24.48			2153.26			
	(Thermal) (*5)	L = 88	F2 = 23.18			2038.91			
	Absolute Sum			836	119	5028	4573	24468	4573

SEAL POT Location: Process Air Bldg.	Pipe Loads	Pipe Length (*2) (in.)	Friction Force (*3) (lb/in)	Fx (lbs)	Fy (lbs)	Fz (lbs)	Mx (in-lb)	My (in-lb)	Mz (in-lb)
Identification: W-320 Process Air Bldg. Floor Drain Piping	**Inner Pipe**	Loads are not applicable since both Process and Encasement Pipe anchors are not coincedent at the Seal Pot.							
Node #: B04	**Encasement**								
Orientation: 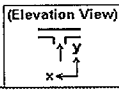	(Seismic) (*4)	L = 28.6	F1 = 24.48		699.15				
	(Thermal) (*5)	L = 28.6	F2 = 23.18		662.02				
	Absolute Sum			0	1361	0	0	0	0

(*1) (Ref. Appendix C, Autopipe Filename: M7-R0)
(*2) L = Pipe lengths immediately preceding anchors as per DWG # ES-320-M07 and ES-320-M08 : (Ref. Appendix A)
(*3) For underground pipe. (Ref. Appendix B, STAB)
(*4) LOAD = F1 x L
(*5) LOAD = F2 x L
(*6) Orientation to Axis "z" is assumed for Nozzle U-8 in this tabulation.
Actual orientation of the Autopipe Model is as per DWG # ES-320-M07, 45 degrees to the assigned axes, and adjusted for this table by the equations:
0.707 x (Fx+Fz) and 0.707 x (Mx+Mz).

ICF KAISER
HANFORD COMPANY

DESIGN ANALYSIS

Calc. No. W-320-27-028
Revision No. 0
Page No. // of //

Client WESTINGHOUSE HANFORD CO.
Subject MISCELLANEOUS PIPING STRESS ANALYSIS
PROJECT W-320 WASTE RETRIEVAL for TANK 241-C-106
Location C TANK FARM 200 EAST AREA

WO/Job No. ER4319
Date / 8/22 / 1995
Checked 9/22/95
Revised

Filename ANCOR.xls
By D. L. STONE
By C D Jones
By

Location: Process Air Bldg. Skid Floor	Pipe Loads	Pipe Length (*2) (in.)	Friction Force (*3) (lb/in)	Fx (lbs)	Fy (lbs)	Fz (lbs)	Mx (in-lb)	My (in-lb)	Mz (in-lb)
	Inner Pipe								
Identification: W-320 Process Air Bldg. Metal Filter Piping	(Seismic)			5	74	217	7464	48	216
	(Thermal)			-1	44	-178	5484	-24	24
	(*1)								
Node #: E10	Encasement								
Orientation: (Elevation View)	(Seismic) (*4)	L = 49	F1 = 24.48		1198.54				
	(Thermal) (*5)	L = 49	F2 = 23.18		1134.89				
	Absolute Sum			6	2451	395	12948	72	240

(*1) (Ref. Appendix C, Autopipe Filename: M7-R0)
(*2) L = Pipe lengths immediately preceding anchors as per DWG # ES-320-M07 and ES-320-M08 : (Ref. Appendix A)
(*3) For underground pipe. (Ref. Appendix B, STAB)
(*4) LOAD=F1 x L
(*5) LOAD=F2 x L
(*6) Orientation to Axis "z" is assumed for Nozzle U-8 in this tabulation.
Actual orientation of the Autopipe Model is as per DWG # ES-320-M07, 45 degrees to the assigned axes, and adjusted for this table by the equations:
0.707 x (Fx+Fz) and 0.707 x (Mx+Mz).

ANCOR-[redacted].XLS8/22/95

APPENDIX A

Process Air Building Floor Drain Seal Pot

From Drawing # H-2-818482

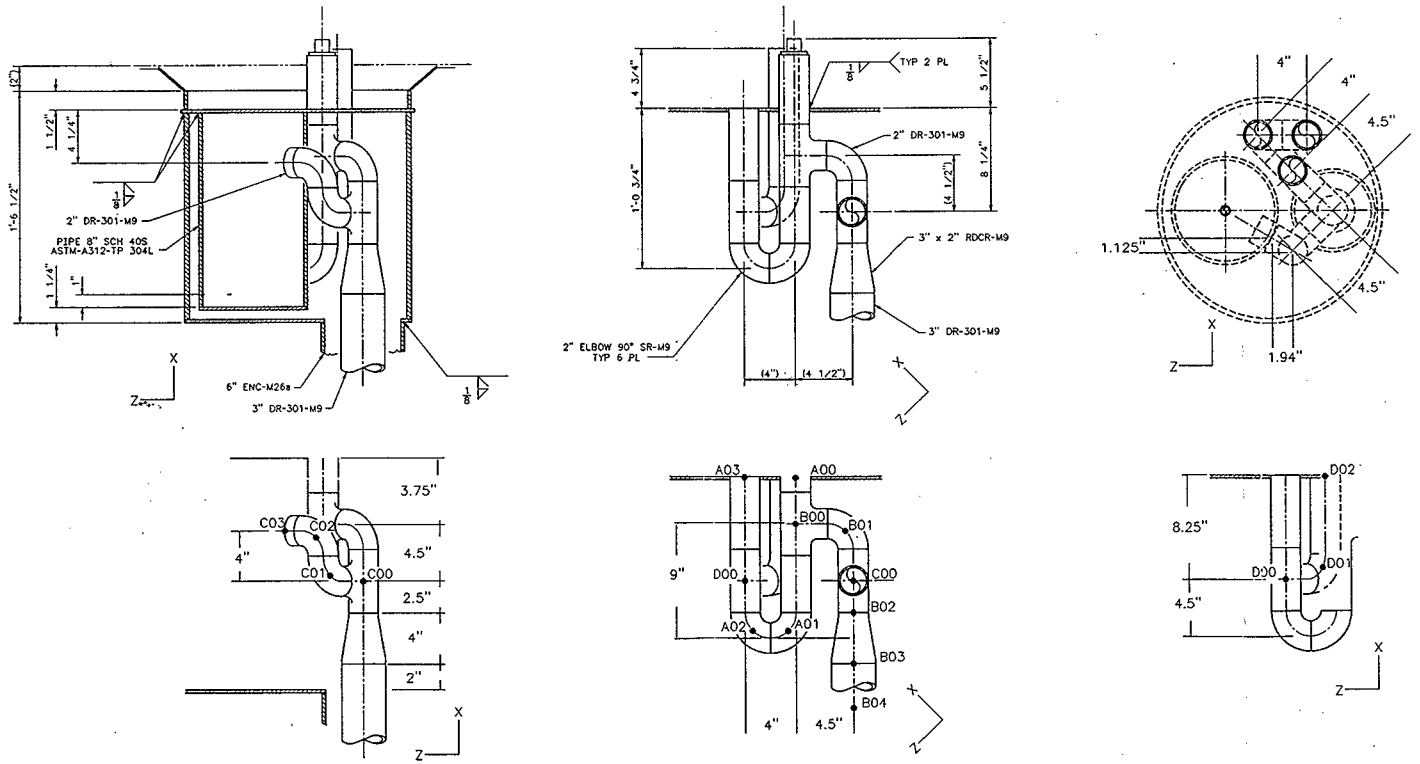

DRAIN PIPING FROM PROCESS AIR BLDG FLOOR TO C-106 TANK

DRAIN LINE - 3" - M9
ENCASEMENT LINE - 6" - M26a
ALL BENDS SHALL BE 36" RAD (UNLES OTHERWISE NOTED)

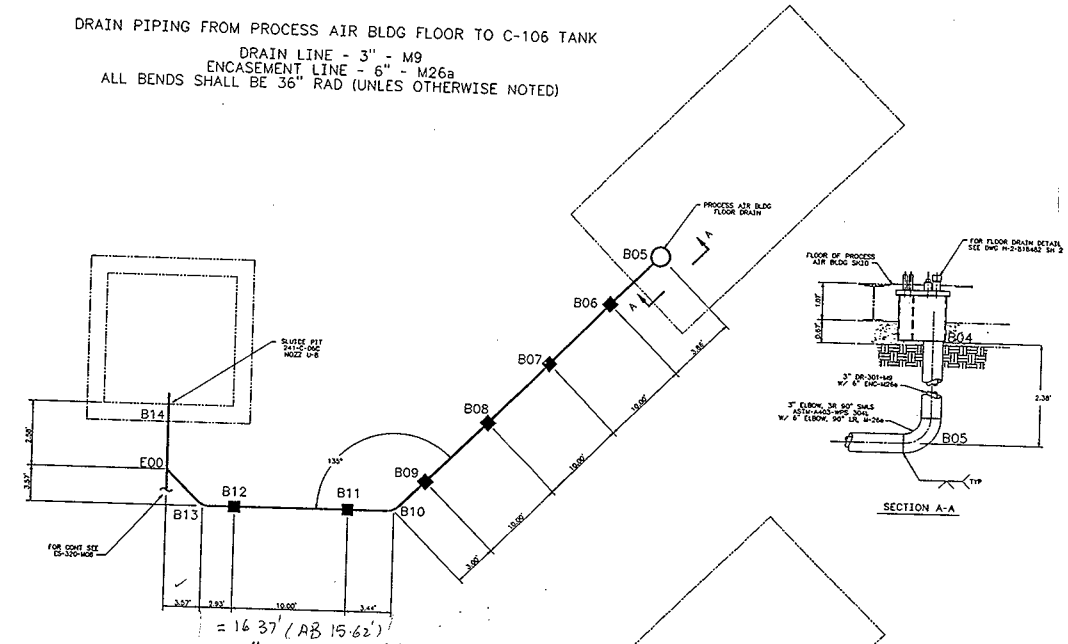

= 16.37' (AB 15.62')

3" DR-301-M9

W/ 6" ENC-M26a.

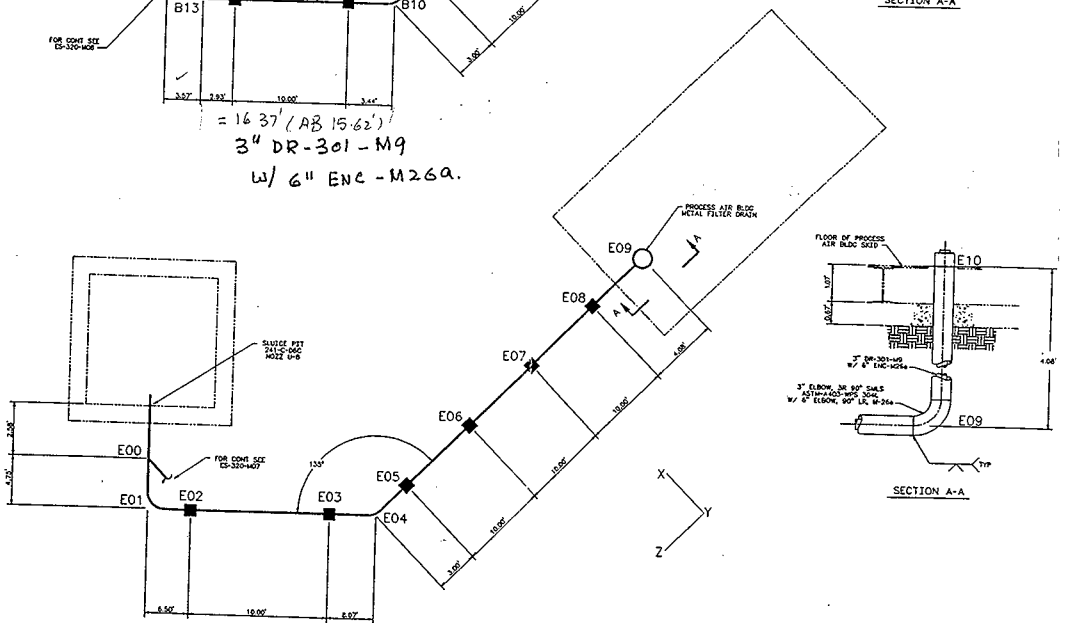

=24.57' (23.52' AB)

3" DR-302-M9

W/ 6" ENC-M26a

S T A B
==========

SEISMIC AND THERMAL STRESS ANALYSIS OF BURIED PIPE

SOURCES: 1. ASME PAPER ON 'HAND CALCULATION OF SEISMIC AND THERMAL STRESSES IN BURIED PIPE' BY G.C.K.YEH, ENGINEERING SPECIALIST, BECHTEL POWER CORP. PVP VOLUME-77, JUNE'83

2. ASME PAPER ON 'FLEXIBILITY ANALYSIS OF BURIED PIPE' BY E.C.GOODLING, SUPERVISING ENGINEER, GILBERT ASSOCIATES. PVP VOLUME-82, JUNE-78

PROGRAM VERSION: 0

PROGRAM AUTHOR: M.M.AHMED

PROGRAM VERIFIER: T.J.SCHALL.

JOB OR WORK ORDER NO: W 320 / ER 4319

FILE NAME: STAB MO8.mcd - SEISMIC

INPUT BY: D.L. STONE DL Stone DATE: 8 / 22 / 95

CHECKED BY: CD Jones DATE: 9/22/95

STEP 1: "DESIGN DATA."
ALL UNITS IN POUNDS, INCHES, RADIANS AND DEGREE F.

A. PIPE DATA: (REF:CRANE TECH PAPER NO:410, 22nd PRINT-1985)

PIPE MATERIAL: ASTM A53, TYPE E, GR B. SCH 40

PIPE SIZE: 6" SCH 40. BEND SIZE: 6" SCH 40 , RADIUS=36".

$D \equiv 6.625 \cdot in$ PIPE OUTSIDE DIAMETER, IN

$t \equiv 0.280 \cdot in$ PIPE WALL THICKNESS, IN

$A \equiv 5.581 \cdot in^2$ PIPE METAL AREA, IN^2

$I \equiv 28.14 \cdot in^4$ PIPE MOMENT OF INERTIA, IN^4

$Z \equiv 8.496 \cdot in^3$ PIPE SECTION MODULUS, IN^3

$A_b \equiv 5.581 \cdot in^2$ BEND METAL AREA, IN^2

$Z_b \equiv 8.496 \cdot in^3$ BEND SECTION MODULUS, IN^3

$R \equiv 36.00 \cdot in$ PIPE BEND RADIUS, IN (36" radius, 90 degree Bend)

$E \equiv 29.34 \cdot 10^6 \cdot \frac{lb}{in^2}$ MODULUS OF ELASTICITY, PSI
(REF:ASME CODE B31.3-1993 ADDENDA 1994)

$\alpha \equiv 6.13 \cdot 10^{-6} \cdot \frac{in}{\left(\frac{in}{K}\right)}$ THERMAL EXPANSION OF ELASTICITY, IN/IN/F.
(REF:ASME CODE B31.3-1993 ADDENDA 1994)

$\phi \equiv 1.57 \cdot rad$ BEND ANGLE IN RADIANS (90 deg.)

$P \equiv 60 \cdot \frac{lb}{in^2}$ DESIGN PRESSURE, PSI
(REF: CONSTRUCTION SPEC W-320, PIPING CODE M-24)

$T \equiv 100 \cdot K$ DESIGN TEMPERATURE, DEG F
(REF: CONSTRUCTION SPEC W-320, PIPING CODE M-24)

$Sc \equiv 20000 \cdot \frac{lb}{in^2}$ COLD ALLOWABLE STRESS, PSI
(REF:ASME CODE B31.3-1993 ADDENDA 1994)

$Sh \equiv 20000 \cdot \frac{lb}{in^2}$ HOT ALLOWABLE STRESS, PSI
(REF:ASME CODE B31.3-1993 ADDENDA 1994)

$Ej \equiv 0.85$ WELD JOINT QUALITY FACTOR
(REF:ASME CODE B31.3-1993 ADDENDA 1994)

$h \equiv \frac{t \cdot R \cdot 4}{(D - t)^2}$ $h = 1.002$ FLEXIBILITY CHARACTER
(REF:ASME CODE B31.3-1990 APPDX-D)

$k \equiv \frac{1.65}{h}$ $k = 1.648$ FLEXIBILITY FACTOR

$i \equiv \frac{0.9}{h^{0.66}}$ $i = 0.899$ SIF FACTOR

IF CALCULATED 'i' IS LESS THAN 1.0, USE i=1.0 $i \equiv 1.00$

B: SOIL CHARACTERISTICS
(REF: SHANNON & WILSON, INC GEOTECH INVESTIGATION REPORT.)

B1: SOIL DATA FOR SEISMIC ANALYSIS

$C \equiv 12000 \cdot \frac{in}{sec}$	SOIL SHEAR WAVE VELOCITY, IN/SEC
$POI \equiv 0.3$	POISSON RATIO
$Kd \equiv 0.32$	COEF OF LATERAL STRESS
$\mu \equiv 0.75$	COEF OF SOIL FRICTION
$Ed \equiv 62000 \cdot \frac{lb}{in^2}$	DYNAMIC ELASTICITY MODULUS, PSI
$\Gamma d \equiv 0.066 \cdot \frac{lb}{in^3}$	DYNAMIC SOIL SPECIFIC WT,LBS/IN^3

B2: SOIL DATA FOR STATIC ANALYSIS

$Ks \equiv 0.25$	COEF OF LATERAL STRESS
$Es \equiv 21000 \cdot \frac{lb}{in^2}$	STATIC ELASTICITY MODULUS, PSI
$\Gamma s \equiv 0.066 \cdot \frac{lb}{in^3}$	STATIC SOIL SPECIFIC WT, LBS/IN^3
$H \equiv 36 \cdot in$	DEPTH OF BURIED PIPE, IN

C: SEISMIC RESPONSE FOR GROUND MOTION
(REF: SDC-4.1 REV-11)

$ag \equiv 0.12$	FREE FIELD HORIZONTAL ACCEL, FRACTION OF 'G'
$Vm \equiv 48 \cdot ag \cdot \frac{in}{sec}$	MAX GROUND VELOCITY, IN/SEC

$Vm = 5.76 \cdot \frac{in}{sec}$

COMPUTED EFFECTIVE LENGHTS:

1. SEISMIC EFFECTIVE LENGTH (Les) :

$Les = 844.392 \cdot in$

****

STAB Subroutine T-3 for Type 3 Bend Analysis

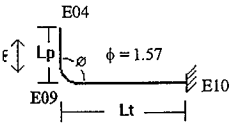

For Calculation of Seismic Effective Length:

from Table 3, ***Classification of Legs*****:**

$L_p \equiv (3 + (3 \cdot 10) + 4.08) \cdot ft$ $\qquad L_p = 444.96 \cdot in$

$L_t \equiv (4.08) \cdot ft$ $\qquad L_t = 48.96 \cdot in$

$Les = 844.392 \cdot in$

Since L_p **(<)** Les **, this is a case of SP Leg, therefore:**

SP: $L := L_p$

$L = 444.96 \cdot in$

****

$L \equiv 444.96 \cdot in$

ANALYSIS RESULTS :

SEISMIC (OCCASIONAL) STRESS (Socc) :

$Sall \equiv 1.33 \cdot Ej \cdot Sh$

$Socc = 5.725 \cdot 10^3 \cdot \frac{lb}{in^2}$ **< ALLOWABLE** $\qquad Sall = 2.261 \cdot 10^4 \cdot \frac{lb}{in^2}$

CONCLUSI0N:

PIPE OCCASIONAL STRESSES SATISFY THE CODE B31.3-1990 REQUIREMENTS.

STEP 2A: SEISMIC ANALYSIS OF BURIED PIPE AND COMPUTATION OF INDEPENDENT VARIABLES.

1. SEISMIC SOIL STRAIN.(εm) :

$$\varepsilon m \equiv \frac{Vm}{2 \cdot C}$$

REF: 2 ON COVER SHEET

$$\varepsilon m = 2.4 \cdot 10^{-4}$$

2. SUBGRADE REACTION MODULUS. (K = LBS/IN^3) :

$$K \equiv \left(\frac{0.65}{D}\right) \cdot \left(\frac{Ed}{E} \cdot \frac{D^4}{I}\right)^{0.0833} \cdot \frac{Ed}{1 - POI^2}$$

$$K = 5.69 \cdot 10^3 \cdot \frac{lb}{in^3}$$

3. SPRING CONSTANT. (S = LBS/IN^2) :

$$S \equiv K \cdot D$$

$$S = 3.77 \cdot 10^4 \cdot \frac{lb}{in^2}$$

4. SYSTEM CHARACTERISTIC (λ = IN^-1) :

$$\lambda \equiv \left(\frac{S}{4 \cdot E \cdot I}\right)^{0.25}$$

$$\lambda = 0.058 \cdot in^{-1}$$

5. SOIL FRICTION.

$$f \equiv \pi \cdot D \cdot \frac{1 + Kd}{2} \cdot \Gamma d \cdot H \cdot \mu$$

$$f = 24.479 \cdot \frac{lb}{in}$$

6. MAXIMUM SLIPPAGE LENGTH (Lm = IN) :

$$Lm \equiv \varepsilon m \cdot A \cdot \frac{E}{f}$$

$$Lm = 1.605 \cdot 10^3 \cdot in$$

7. MAXIMUM AXIAL FORCE (F = LBS) :

$$F \equiv f \cdot Lm$$

$$F = 3.93 \cdot 10^4 \cdot lb$$

8. MINIMUM TRANSVERSE LEG LENGTH REQUIRED (l = IN) :

$l \equiv \frac{\pi}{\lambda}$ REF: 2 ON COVER SHEET

$l = 54.048 \cdot in$

NOTE: SINCE ALL PIPE RUNS WILL GENERALLY BE LONGER THAN, "l", IT IS ASSUMED THAT TRANSVERSE LEG LENGTH CRITERIA HAS BEEN SATISFIED AND ALL CONSTANTS C1 THRU C6 IN SUCCEEDING FORMULAE ARE EQUAL TO 1.0 . THEREFORE THE FOLLWING FORMULAS ARE MODIFIED USING THE VALUES OF CONSTANTS AS 1.0

9. INDEPENDENT VARIABLE (a21) :

$$a21 \equiv \lambda \cdot \left(k \cdot R \cdot \frac{\phi}{E \cdot I} + 4 \cdot \frac{\lambda^3}{K \cdot D} \right)^{-1}$$

$a21 = 4.35 \cdot 10^5 \cdot lb$

10. INDEPENDENT VARIABLE (a31) :

$$a31 \equiv \frac{S}{2 \cdot \lambda}$$

$a31 = 3.243 \cdot 10^5 \cdot \frac{lb}{in}$

11. INDEPENDENT VARIABLE (a32) :

$a32 \equiv \lambda$

$a32 = 0.058 \cdot in^{-1}$

12. INDEPENDENT VARIABLE (a) :

$a \equiv a31 + a21 \cdot a32$

$a = 3.496 \cdot 10^5 \cdot \frac{lb}{in}$

13. SEISMIC EFFECTIVE LENGTH (Les = IN) :

$$Les \equiv \left(A \cdot \frac{E}{a} \right) \cdot \left[\left(1 + 2 \cdot \varepsilon m \cdot \frac{a}{f} \right)^{0.5} - 1 \right]$$

$Les = 844.392 \cdot in$

STEP 3B: SEISMIC ANALYSIS AND CALCULATION OF SHEAR FORCES, MOMENTS AND STRESSES IN PIPE BEND.

1. DEPENDENT VARIABLE (a11) :

$$a11 \equiv \varepsilon m \cdot L - \left(f \cdot \frac{L^2}{2 \cdot A \cdot E}\right)$$

$$a11 = 0.092 \cdot in$$

2. DEPENDENT VARIABLE (a12) :

$$a12 \equiv \frac{-L}{A \cdot E}$$

$$a12 = -2.717 \cdot 10^{-6} \cdot \frac{in}{lb}$$

3. DISPLACEMENT AT BEND (δ = inches) :

$$\delta \equiv \frac{a11}{1 - a12 \cdot a}$$

$$\delta = 0.047 \cdot in$$

4. SHEAR IN TRANSVERSE LEG (Qt = LBS) :

$$Qt \equiv a \cdot \delta$$

$$Qt = 1.649 \cdot 10^4 \cdot lb$$

5. MOMENT IN BEND (M = IN-LBS):

$$M \equiv a21 \cdot \delta$$

$$M = 2.052 \cdot 10^4 \cdot in \cdot lb$$

6. SHEAR IN LONGITUDINAL LEG (Qp = LBS) :

$$Qp \equiv \lambda \cdot M$$

$$Qp = 1.193 \cdot 10^3 \cdot lb$$

7. CODE B31.3 COMPLIANCE FOR SEISMIC + SUSTAINED STRESSES.

Socc < Sall

$$Socc \equiv \frac{P \cdot D}{4 \cdot t} + i \cdot \frac{M}{Z_b} + \frac{Qt}{A_b} \qquad Sall \equiv 1.33 \cdot Ej \cdot Sh$$

$$Socc = 5.725 \cdot 10^3 \cdot \frac{lb}{in^2} \quad < \quad Sall = 2.261 \cdot 10^4 \cdot \frac{lb}{in^2}$$

CONCLUSION: PIPE OCCASIONAL STRESSES SATISFY CODE B31.3 REQUIREMENTS.

S T A B
==========

SEISMIC AND THERMAL STRESS ANALYSIS OF BURIED PIPE

SOURCES: 1. ASME PAPER ON 'HAND CALCULATION OF SEISMIC AND THERMAL STRESSES IN BURIED PIPE' BY G.C.K.YEH, ENGINEERING SPECIALIST, BECHTEL POWER CORP. PVP VOLUME-77, JUNE'83

2. ASME PAPER ON 'FLEXIBILITY ANALYSIS OF BURIED PIPE' BY E.C.GOODLING, SUPERVISING ENGINEER, GILBERT ASSOCIATES. PVP VOLUME-82, JUNE-78

PROGRAM VERSION: 0

PROGRAM AUTHOR: M.M.AHMED.

PROGRAM VERIFIER: T.J.SCHALL.

JOB OR WORK ORDER NO: W 320 / ER 4319

FILE NAME: SB45M8-T.mcd

INPUT BY: D.L. STONE DATE: 8 / 22 / 95

CHECKED BY: ~~M.M. AHMED~~ C D Stone DATE: 9/22/95

STEP 1: " DESIGN DATA."
ALL UNITS IN POUNDS, INCHES, RADIANS AND DEGREE F.

A. PIPE DATA. (REF: CRANE TECH PAPER NO. 410, 22nd PRINT-1985

PIPE MATERIAL: ASTM A53, TYPE E, GR B. SCH 40

PIPE SIZE: 6" SCH 40. BEND SIZE: 6" SCH 40, RADIUS= 36"

$D \equiv 6.625 \cdot in$	PIPE OUTSIDE DIAMETER, IN
$t \equiv 0.280 \cdot in$	PIPE WALL THICKNESS, IN
$A \equiv 5.581 \cdot in^2$	PIPE METAL AREA, IN^2
$I \equiv 28.14 \cdot in^4$	MOMENT OF INERTIA, IN^4
$Z \equiv 8.496 \cdot in^3$	SECTION MODULUS, IN^3
$A_b \equiv 5.581 \cdot in^2$	BEND METAL AREA, IN^2
$Z_b \equiv 8.496 \cdot in^3$	BEND SECTION MODULUS, IN^3
$R \equiv 36.00 \cdot in$	PIPE BEND RADIUS, IN (36" Radius, 45 degree Bend)
$E \equiv 29.34 \cdot 10^6 \cdot \frac{lb}{in^2}$	MODULUS OF ELASTICITY, PSI (REF:ASME CODE B31.3-1993 ADDENDA 1994)
$\alpha \equiv 6.13 \cdot 10^{-6} \cdot \frac{in}{(in \cdot K)}$	THERMAL EXPANSION OF ELASTICITY, IN/IN/F. (REF:ASME CODE B31.3-1993 ADDENDA 1994)
$\phi \equiv 2.356 \cdot rad$	BEND ANGLE IN RADIANS
$P \equiv 60 \cdot \frac{lb}{in^2}$	DESIGN PRESSURE, PSI (REF: CONSTRUCTION SPEC W-320, PIPING CODE M-24)
$T \equiv 100 \cdot K$	DESIGN TEMPERATURE, DEG F (REF: CONSTRUCTION SPEC W-320, PIPING CODE M-24)
$Sc \equiv 20000 \cdot \frac{lb}{in^2}$	COLD ALLOWABLE STRESS, PSI (REF:ASME CODE B31.3-1993 ADDENDA 1994)
$Sh \equiv 20000 \cdot \frac{lb}{in^2}$	HOT ALLOWABLE STRESS, PSI (REF:ASME CODE B31.3-1993 ADDENDA 1994)
$EJ \equiv 0.85$	WELD JOINT QUALITY FACTOR (REF:ASME CODE B31.3-1993 ADDENDA 1994)
$F \equiv 1.00$	CYCLIC FACTOR FOR 7000 C/S
$h \equiv \frac{t \cdot R \cdot 4}{(D - t)^2}$ $h = 1.002$	FLEXIBILITY CHARACTER (REF:ASME CODE B31.3-1990 APPDX-D)
$k \equiv \frac{1.65}{h}$ $k = 1.648$	FLEXIBILITY FACTOR
$i \equiv \frac{0.9}{h^{0.66}}$ $i = 0.899$	SIF FACTOR

IF CALCULATED 'i' IS LESS THAN 1.0, USE $i = 1.0 i \equiv 1.00$

B: SOIL CHARACTERISTICS
(REF: SHANNON & WILSON, INC GEOTECH INVESTIGATION REPORT.)

B1: SOIL DATA FOR SEISMIC ANALYSIS

$C \equiv 12000 \cdot \frac{in}{sec}$	SOIL SURFACE WAVE VELOCITY, IN/SEC
$POI \equiv 0.3$	POISSON RATIO
$Kd \equiv 0.32$	COEF OF LATERAL STRESS
$\mu \equiv 0.75$	COEF OF SOIL FRICTION
$Ed \equiv 62000 \cdot \frac{lb}{in^2}$	DYNAMIC ELASTICITY MODULUS, PSI
$\Gamma d \equiv 0.066 \cdot \frac{lb}{in^3}$	DYNAMIC SOIL SPECIFIC WT,LBS/IN^3

B2: SOIL DATA FOR STATIC ANALYSIS

$Ks \equiv 0.25$	COEF OF LATERAL STRESS
$Es \equiv 21000 \cdot \frac{lb}{in^2}$	STATIC ELASTICITY MODULUS, PSI
$\Gamma s \equiv 0.066 \cdot \frac{lb}{in^3}$	STATIC SOIL SPECIFIC WT, LBS/IN^3
$H \equiv 36 \cdot in$	DEPTH OF BURIED PIPE, IN .

C: SEISMIC RESPONSE FOR GROUND MOTION
(REF: SDC-4.1 REV-11)

$ag \equiv 0.12$	FREE FIELD HORIZONTAL ACCEL, FRACTION OF 'G'
$Vm \equiv 48 \cdot ag \cdot \frac{in}{sec}$	MAX GROUND VELOCITY, IN/SEC

$Vm = 5.76 \cdot \frac{in}{sec}$

COMPUTED THERMAL EFFECTIVE LENGTH

$Let = 1.546 \cdot 10^3 \cdot in$

****

STAB Subroutine T-2 for Type 2 Bend Analysis

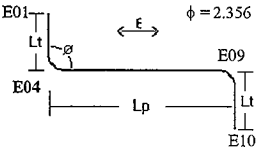

For Calculation of Thermal Effective Length:

from Table 3, *Classification of Legs*:

$L_p \equiv (3 + (3 \cdot 10) + 4.08) \cdot ft$

$L_p = 444.96 \cdot in$

$2 \cdot Let = 3.092 \cdot 10^3 \cdot in$

$L_t \equiv (6.5 + 10 + 8.07) \cdot ft$

$L_t = 294.84 \cdot in$

Since L_p (<) $2 \cdot Let$

this is a case of SP Leg, therefore:

SP: $L1 := \frac{L_p}{2}$

$L1 = 222.48 \cdot in$

Since L_t (<) $2 \cdot Let$

this is a case of SP Leg, therefore:

SP: $L2 := \frac{L_t}{2}$

$L2 = 147.42 \cdot in$

****

$L1 \equiv 222.48 \cdot in$

$L2 \equiv 147.42 \cdot in$

ANALYSIS RESULTS:

$Set = 5.797 \cdot 10^3 \cdot \frac{lb}{in^2}$ < ALLOWABLE $Sa = 4.965 \cdot 10^4 \cdot \frac{lb}{in^2}$

CONCLUSION:

PIPE DISPLACEMENT STRESSES SATISFY THE CODE B31.3-90 REQUIREMENTS.

STEP 2B: THERMAL ANALYSIS OF BURIED PIPE AND COMPUTATION OF INDEPENDENT VARIABLES.

1.THERMAL STRAIN (εt = IN/IN)

$\varepsilon t \equiv \alpha \cdot (T - 40 \cdot K)$

$\varepsilon t = 3.678 \cdot 10^{-4} \cdot \frac{in}{in}$

2. SUBGRADE REACTION MODULUS (Kt = LBS/IN^3) :

$Kt \equiv \left(\frac{0.65}{D}\right) \cdot \left(\frac{Es \cdot D^4}{E \cdot I}\right)^{0.0833} \cdot \frac{Es}{1 - POI^2}$

$Kt = 1.761 \cdot 10^3 \cdot \frac{lb}{in^3}$

3. SPRING CONSTANT (St = LBS/IN^2) :

$St \equiv Kt \cdot D$

$St = 1.167 \cdot 10^4 \cdot \frac{lb}{in^2}$

4. SYSTEM CHARACTERISTIC (λt = IN^-1) :

$\lambda t \equiv \left(\frac{St}{4 \cdot E \cdot I}\right)^{0.25}$

$\lambda t = 0.043 \cdot in^{-1}$

5. SOIL STATIC FRICTION (ft = LBS/IN) :

$ft \equiv \pi \cdot D \cdot \frac{1 + Ks}{2} \cdot \Gamma s \cdot H \cdot \mu$

$ft = 23.181 \cdot \frac{lb}{in}$

6. MAXIMUM SLIPPAGE LENGTH (Lt = IN) :

$Lt \equiv \varepsilon t \cdot A \cdot \frac{E}{ft}$

$Lt = 2.598 \cdot 10^3 \cdot in$

7. MAXIMUM AXIAL FORCE (Ft = LBS) :

$Ft \equiv ft \cdot Lt$

$Ft = 6.023 \cdot 10^4 \cdot lb$

8. MINIMUM LENGTH OF TRANSVERSE LEG (lt = IN)

$lt \equiv \frac{\pi}{\lambda t}$ REF: 2 ON COVER SHEET

$lt = 72.463 \cdot in$

ASSUMED THE LENGTH OF ALL TRANSVERSE LEGS WILL GENERALLY BE MORE THAN "lt" . AS SUCH ALL CONSTANTS C1 THRU C6 IN FOLLOWING EQUATIONS ARE CONSIDERED AS 1.0 AND FORMULAE ARE MODIFIED ACCORDINGLY.

9. INDEPENDENT VARIABLE (A21) :

$$A21 \equiv \lambda t \cdot \left(\frac{k \cdot R \cdot \phi}{E \cdot I} + \frac{4 \cdot \lambda t^3}{Kt \cdot D} \right)^{-1}$$

$A21 = 2.199 \cdot 10^5 \cdot lb$

10. INDEPENDENT VARIABLE (A31) :

$$A31 \equiv \frac{Kt \cdot D}{2 \cdot \lambda t}$$

$A31 = 1.346 \cdot 10^5 \cdot \frac{lb}{in}$

11. INDEPENDENT VARIABLE (A32) :

$A32 \equiv \lambda t$

$A32 = 0.043 \cdot in^{-1}$

12. INDEPENDENT VARIABLE (At) :

$At \equiv A31 + A21 \cdot A32$

$At = 1.441 \cdot 10^5 \cdot \frac{lb}{in}$

13. THERMAL EFFECTIVE LENGTH (Let) :

$$Let \equiv \frac{A \cdot E}{At} \cdot \left[\left(1 + \frac{2 \cdot \varepsilon t \cdot At}{ft} \right)^{0.5} - 1 \right]$$

$Let = 1.546 \cdot 10^3 \cdot in$

THERMAL ANALYSIS OF PIPE BEND AND COMPUTATION OF SHEAR FORCES, MOMENTS AND STRESSES IN PIPE BEND. DUE TO THERMAL STRAIN IN LONG PIPE LEG.

1.DEPENDENT VARAIBLE (A11) :

$$A11 \equiv \varepsilon t \cdot L1 - \left(ft \cdot \frac{L1^2}{2 \cdot A \cdot E}\right)$$

$$A11 = 0.078 \cdot in$$

2. DEPENDENT VARIABLE (A12) :

$$A12 \equiv \frac{-L1}{A \cdot E}$$

$$A12 = -1.359 \cdot 10^{-6} \cdot \frac{in}{lb}$$

3. DISPLACEMENT AT BEND (δt=in) :

$$\delta t \equiv \frac{A11}{1 - A12 \cdot At}$$

$$\delta t = 0.066 \cdot in$$

4. SHEAR IN TRANSVERSE LEG (Vt=lbs) :

$$Vt \equiv At \cdot \delta t$$

$$Vt = 9.438 \cdot 10^{3} \cdot lb$$

5. MOMENT IN BEND (Mt=in.lbs)

$$Mt \equiv A21 \cdot \delta t$$

$$Mt = 1.44 \cdot 10^{4} \cdot in \cdot lb$$

6. SHEAR IN LONGITUDINAL LEG (Vp=in.lbs)

$$Vp \equiv \lambda t \cdot Mt$$

$$Vp = 624.376 \cdot lb$$

7. DISPLACEMENT STRESS AT BEND (Se = Psi)

$$Se \equiv i \cdot \left(\frac{Mt}{Z_b}\right) + \frac{Vt}{A_b}$$

$$Se = 3.386 \cdot 10^{3} \cdot \frac{lb}{in^2}$$

NOTE: THIS DISPLACEMENT STRESS AT BEND IS DUE TO STRAIN IN ONE PIPE LEG. COMPUTE STRESSS DUE TO OTHER LEG AND ADD THESE TOGETHER.

B. DUE TO THERMAL STRAIN IN SHORT PIPE LEG:

1. DEPENDENT VARIABLE (B11) :

$$B11 \equiv \varepsilon t \cdot L2 - \left(ft \cdot \frac{L2^2}{2 \cdot A \cdot E}\right)$$

$$B11 = 0.053 \cdot in$$

2. DEPENDENT VARIABLE (B12) :

$$B12 \equiv \frac{-L2}{A \cdot E}$$

$$B12 = -9.003 \cdot 10^{-7} \cdot \frac{in}{lb}$$

3. DISPLACEMENT AT BEND (δ1 = inches)

$$\delta 1 \equiv \frac{B11}{1 - B12 \cdot At}$$

$$\delta 1 = 0.047 \cdot in$$

4. SHEAR FORCE IN TRANSVERSE LEG (V1 = Lbs) :

$$V1 \equiv At \cdot \delta 1$$

$$V1 = 6.72 \cdot 10^{3} \cdot lb$$

5. MOMENT IN BEND (M1 = in.lbs) :

$$M1 \equiv A21 \cdot \delta 1$$

$$M1 = 1.025 \cdot 10^{4} \cdot in \cdot lb$$

6. SHEAR IN LONGITUDINAL LEG (V2 = lbs) :

$$V2 \equiv \lambda t \cdot M1$$

$$V2 = 444.523 \cdot lb$$

7. DISPLACEMENT STRESS AT BEND (Se1 = Psi) :

$$Se1 \equiv i \cdot \left(\frac{M1}{Z_b}\right) + \frac{V1}{A_b}$$

$$Se1 = 2.411 \cdot 10^{3} \cdot \frac{lb}{in^2}$$

8. CODE B31.3 COMPLIANCE FOR DISPLACEMENT STRESS.

$Set \equiv Se + Sel$

$SL \equiv \frac{P \cdot D}{4 \cdot t}$

$SL = 354.911 \cdot \frac{lb}{in^2}$

$Sa \equiv F \cdot (1.25 \cdot (Sc + Sh) - SL)$

$Set = 5.797 \cdot 10^3 \cdot \frac{lb}{in^2} \quad < \quad Sa = 4.965 \cdot 10^4 \cdot \frac{lb}{in^2}$

CONCLUSION: PIPE DISPLACEMENT STRESSES SATISFY CODE B31.3-90 REQUIREMENTS.

APPENDIX C

POINT DATA LISTING

POINT NAME	TYPE	OFFSETS (ft) X	Y	Z	PIPE ID	DESCRIPTION
*** SEGMENT A						
A00	Run	0	0	0	PIPE 1	
B00	Tee	0	-0.31	0		
A01	Bend	0	-0.75	0		Short Elbow, Radius = 2.00 inch Bend angle change = 90.00 deg Mid point at 50.00 percent SIF - In 2.27, Out = 1.89 Flex = 6.606
A02	Bend	0.24	0	0.24		Short Elbow, Radius = 2.00 inch Bend angle change = 90.00 deg Mid point at 50.00 percent SIF - In 2.27, Out = 1.89 Flex = 6.606
D00	Tee	0	0.38	0		
A03	Run	0	0.69	0		
*** SEGMENT B						
B00	Tee	0	-0.31	0	PIPE 1	
B01	Bend	-0.27	0	-0.27		Short Elbow, Radius = 2.00 inch Bend angle change = 90.00 deg Mid point at 50.00 percent SIF - In 2.27, Out = 1.89 Flex = 6.606
C00	Tee	0	-0.38	0		
B02	Redu	0	-0.21	0		
B03	Run	0	-0.33	0	PIPE 2	
B04	Run	0	-0.17	0		
B05	Bend	0	-2.38	0		Long Elbow, Radius = 4.50 inch Bend angle change = 90.00 deg Mid point at 50.00 percent SIF - In 1.78, Out = 1.48 Flex = 4.577
B06	Run	0	0	3.86		
B07	Run	0	0	10.00		
B08	Run	0	0	10.00		
B09	Run	0	0	10.00		
B10	Bend	0	0	3.00		Elbow, Radius = 36.00 inch Bend angle change = 45.00 deg Mid point at 50.00 percent SIF - In 1.00, Out = 1.00 Flex = 1.000
B11	Run	2.43	0	2.43		
B12	Run	7.07	0	7.07		
B13	Bend	2.07	0	2.07		Elbow, Radius = 36.00 inch

POINT DATA LISTING

POINT NAME	TYPE	OFFSETS (ft) X	Y	Z	PIPE ID	DESCRIPTION
						Bend angle change = 45.00 deg Mid point at 50.00 percent SIF - In 1.00, Out = 1.00 Flex = 1.000
E00	Tee	5.05	0	0		
B14	Run	1.82	0	-1.82		
*** SEGMENT C						
C00	Tee	-0.27	-0.69	-0.27	PIPE 1	
C01	Bend	-0.27	0	0.27		Short Elbow, Radius = 2.00 inch Bend angle change = 90.00 deg Mid point at 50.00 percent SIF - In 2.27, Out = 1.89 Flex = 6.606
C02	Bend	0	0.33	0		Short Elbow, Radius = 2.00 inch Bend angle change = 90.00 deg Mid point at 50.00 percent SIF - In 2.27, Out = 1.89 Flex = 6.606
C03	Run	0.09	0	0.16		
*** SEGMENT D						
D00	Tee	0.24	-0.69	0.24	PIPE 1	
D01	Bend	0	0	-0.33		Short Elbow, Radius = 2.00 inch Bend angle change = 90.00 deg Mid point at 50.00 percent SIF - In 2.27, Out = 1.89 Flex = 6.606
D02	Run	0	0.69	0		
*** SEGMENT E						
E00	Tee	16.35	-3.78	48.17	PIPE 2	
E01	Bend	-3.35	0	3.35		Long Elbow, Radius = 4.50 inch Bend angle change = 90.00 deg Mid point at 50.00 percent SIF - In 1.78, Out = 1.48 Flex = 4.577
E02	Run	-4.60	0	-4.60		
E03	Run	-7.07	0	-7.07		
E04	Bend	-5.71	0	-5.71		Long Elbow, Radius = 4.50 inch Bend angle change = 45.00 deg Mid point at 50.00 percent SIF - In 1.78, Out = 1.48 Flex = 4.577

POINT DATA LISTING

POINT NAME	TYPE	OFFSETS (ft) X	Y	Z	PIPE ID	DESCRIPTION
E05	Run	0	0	-3.00		
E06	Run	0	0	-10.00		
E07	Run	0	0	-10.00		
E08	Run	0	0	-10.00		
E09	Bend	0	0	-4.08		Long Elbow, Radius = 4.50 inch Bend angle change = 90.00 deg Mid point at 50.00 percent SIF - In 1.78, Out = 1.48 Flex = 4.577
E10	Run	0	4.08	0		

Total weight of empty pipes : 1079 lb

COMPONENT DATA LISTING

POINT NAME	COORDINATE(ft) X	Y	Z	DATA TYPE	DESCRIPTION
*** SEGMENT A					
A00	0.00	0.00	0.00	ANCHOR	Rigid Thermal movements : None
B00	0.00	-0.31	0.00	TEE	B16.9 welding tee SIF - In = 1.19, Out = 1.25
A01 N	0.00	-0.89	0.00		
A01	0.00	-1.06	0.00	TI	
A01 M	0.03	-1.01	0.03		
A01 F	0.12	-1.06	0.12		
A02 N	0.12	-1.06	0.12		
A02	0.24	-1.06	0.24	TI	
A02 M	0.20	-1.01	0.20		
A02 F	0.24	-0.89	0.24		
D00	0.24	-0.69	0.24	TEE	B16.9 welding tee SIF - In = 1.19, Out = 1.25
A03	0.24	0.00	0.24	ANCHOR	Rigid Thermal movements : None
*** SEGMENT B					
B00	0.00	-0.31	0.00	TEE	B16.9 welding tee SIF - In = 1.19, Out = 1.25
B01 N	-0.15	-0.31	-0.15		
B01	-0.27	-0.31	-0.27	TI	
B01 M	-0.23	-0.36	-0.23		
B01 F	-0.27	-0.48	-0.27		
C00	-0.27	-0.69	-0.27	TEE	B16.9 welding tee SIF - In = 1.19, Out = 1.25
B02	-0.27	-0.89	-0.27		
B03	-0.27	-1.23	-0.27		
B04	-0.27	-1.39	-0.27		
B05 N	-0.27	-3.40	-0.27		
B05	-0.27	-3.78	-0.27	TI	
B05 M	-0.27	-3.67	-0.16		
B05 F	-0.27	-3.78	0.11		
B06	-0.27	-3.78	3.59	GUIDE	ID : B06 1, Connected to Ground Stiffness = RIGID Gap-down = 0.00, Above = 0.06 inch Gap-left = 0.06, Right = 0.06 inch Friction = 0.15 Gaps set Weightless
B07	-0.27	-3.78	13.60	GUIDE	ID : B07 1, Connected to Ground Stiffness = RIGID Gap-down = 0.00, Above = 0.06 inch Gap-left = 0.06, Right = 0.06 inch Friction = 0.15 Gaps set Weightless
B08	-0.27	-3.78	23.60	GUIDE	ID : B08 1, Connected to Ground Stiffness = RIGID Gap-down = 0.00, Above = 0.06 inch

COMPONENT DATA LISTING

POINT NAME	---COORDINATE(ft X	Y	Z)---	DATA TYPE	DESCRIPTION
					Gap-left = 0.06, Right = 0.06 inch Friction = 0.15 Gaps set Weightless
B09	-0.27	-3.78	33.60	GUIDE	ID : B09 1, Connected to Ground Stiffness = RIGID Gap-down = 0.00, Above = 0.06 inch Gap-left = 0.06, Right = 0.06 inch Friction = 0.15 Gaps set Weightless
B10 N	-0.27	-3.78	35.35		
B10	-0.27	-3.78	36.60	TI	
B10 M	-0.04	-3.78	36.50		
B10 F	0.61	-3.78	37.47		
B11	2.16	-3.78	39.03	GUIDE	ID : B11 1, Connected to Ground Stiffness = RIGID Gap-down = 0.00, Above = 0.06 inch Gap-left = 0.06, Right = 0.06 inch Friction = 0.15 Gaps set Weightless
B12	9.23	-3.78	46.10	GUIDE	ID : B12 1, Connected to Ground Stiffness = RIGID Gap-down = 0.00, Above = 0.06 inch Gap-left = 0.06, Right = 0.06 inch Friction = 0.15 Gaps set Weightless
B13 N	10.43	-3.78	47.29		
B13	11.30	-3.78	48.17	TI	
B13 M	11.40	-3.78	47.94		
B13 F	12.55	-3.78	48.17		
E00	16.35	-3.78	48.17	TEE	B16.9 welding tee SIF - In = 1.22, Out = 1.30
B14	18.17	-3.78	46.35	ANCHOR	Rigid Thermal movements : None
*** SEGMENT C					
C00	-0.27	-0.69	-0.27	TEE	B16.9 welding tee SIF - In = 1.19, Out = 1.25
C01 N	-0.41	-0.69	-0.12		
C01	-0.53	-0.69	0.00	TI	
C01 M	-0.50	-0.64	-0.03		
C01 F	-0.53	-0.52	0.00		
C02 N	-0.53	-0.52	0.00		
C02	-0.53	-0.35	0.00	TI	
C02 M	-0.51	-0.40	0.04		
C02 F	-0.45	-0.35	0.14		
C03	-0.44	-0.35	0.16	ANCHOR	Rigid Thermal movements : None
*** SEGMENT D					

COMPONENT DATA LISTING

POINT NAME	---COORDINATE(ft X	Y	Z)---	DATA TYPE	DESCRIPTION
D00	0.24	-0.69	0.24	TEE	B16.9 welding tee SIF - In = 1.19, Out = 1.25
D01 N	0.24	-0.69	0.07		
D01	0.24	-0.69	-0.10	TI	
D01 M	0.24	-0.64	-0.05		
D01 F	0.24	-0.52	-0.10		
D02	0.24	0.00	-0.10	ANCHOR	Rigid Thermal movements : None
*** SEGMENT E					
E00	16.35	-3.78	48.17	TEE	B16.9 welding tee SIF - In = 1.22, Out = 1.30
E01 N	13.27	-3.78	51.25		
E01	13.01	-3.78	51.52	TI	
E01 M	13.01	-3.78	51.36		
E01 F	12.74	-3.78	51.25		
E02	8.41	-3.78	46.92	GUIDE	ID : E02 1, Connected to Ground Stiffness = RIGID Gap-down = 0.00, Above = 0.06 inch Gap-left = 0.06, Right = 0.06 inch Friction = 0.15 Gaps set Weightless
E03	1.34	-3.78	39.85	GUIDE	ID : E03 1, Connected to Ground Stiffness = RIGID Gap-down = 0.00, Above = 0.06 inch Gap-left = 0.06, Right = 0.06 inch Friction = 0.15 Gaps set Weightless
E04 N	-4.27	-3.78	34.24		
E04	-4.37	-3.78	34.14	TI	
E04 M	-4.35	-3.78	34.12		
E04 F	-4.37	-3.78	33.98		
E05	-4.37	-3.78	31.14	GUIDE	ID : E05 1, Connected to Ground Stiffness = RIGID Gap-down = 0.00, Above = 0.06 inch Gap-left = 0.06, Right = 0.06 inch Friction = 0.15 Gaps set Weightless
E06	-4.37	-3.78	21.14	GUIDE	ID : E06 1, Connected to Ground Stiffness = RIGID Gap-down = 0.00, Above = 0.06 inch Gap-left = 0.06, Right = 0.06 inch Friction = 0.15 Gaps set Weightless
E07	-4.37	-3.78	11.14	GUIDE	ID : E07 1, Connected to Ground Stiffness = RIGID Gap-down = 0.00, Above = 0.06 inch Gap-left = 0.06, Right = 0.06 inch Friction = 0.15

C O M P O N E N T D A T A L I S T I N G

POINT NAME	---COORDINATE(ft)--- X	Y	Z	DATA TYPE	DESCRIPTION
					Gaps set Weightless
E08	-4.37	-3.78	1.14	GUIDE	ID : E08 1, Connected to Ground Stiffness = RIGID Gap-down = 0.00, Above = 0.06 inch Gap-left = 0.06, Right = 0.06 inch Friction = 0.15 Gaps set Weightless
E09 N	-4.37	-3.78	-2.57		
E09	-4.37	-3.78	-2.94	TI	
E09 M	-4.37	-3.67	-2.84		
E09 F	-4.37	-3.40	-2.94		
E10	-4.37	0.30	-2.94	ANCHOR	Rigid Thermal movements : None

Number of points in the system : 77

P I P E D A T A L I S T I N G

Pipe ID/ Material	Nom/ Sch	O.D. inch	-----Thickness(inch)----- W.Th.	Corr	Mill	Insu	Ling	Spec Grav	Weight(lb/ft) Pipe	Other	Total
PIPE 1 A312-TP304L	2.000 STD	2.375	0.154	0.06	0.02	0	0	1.25	3.74	0	5.56
PIPE 2 A312-TP304L	3.000 STD	3.500	0.216	0.06	0.03	0	0	1.25	7.75	0	11.76

ICF-4893HT

M A T E R I A L D A T A L I S T I N G

Material Name	Pipe ID	Density lb/cu.ft	Pois. Ratio	Temper. deg F	Modulus E6 psi	Expans. in/100ft	Allow. psi
A312-TP304L	PIPE 1	501.0	0.30	40.0	28.42		16700.0
				100.0		0.6457	16700.0
A312-TP304L	PIPE 2	501.0	0.30	40.0	28.42		16700.0
				100.0		0.6457	16700.0

TEMPERATURE AND PRESSURE DATA

POINT NAME	CASE 1 PRESS. psi	CASE 1 TEMPER deg F	CASE 1 EXPAN. in/100ft	CASE 2 PRESS. psi	CASE 2 TEMPER deg F	CASE 2 EXPAN. in/100ft	CASE 3 PRESS. psi	CASE 3 TEMPER deg F	CASE 3 EXPAN. in/100ft
*** SEGMENT A									
A00	60.00	100	0.646						
A03	60.00	100	0.646						
*** SEGMENT B									
B00	60.00	100	0.646						
B14	60.00	100	0.646						
*** SEGMENT C									
C00	60.00	100	0.646						
C03	60.00	100	0.646						
*** SEGMENT D									
D00	60.00	100	0.646						
D02	60.00	100	0.646						
*** SEGMENT E									
E00	60.00	100	0.646						
E10	60.00	100	0.646						

A N A L Y S I S S U M M A R Y

Current model revision number : 19

```
Static - Date and Time of analysis ............. Aug 22, 1995   2:26 PM
         Model Revision Number ................. 19
         Number of load cases .................. 3
         Load cases analyzed ................... GR T1 P1
         Gaps/Friction/Yielding considered ..... No
         Hanger design run ..................... No
         Cut short included .................... No
         Weight of contents included ........... Yes
         Pressure stiffening case .............. 0
         Water elevation for buoyancy loads .... Not considered

Modal  - Date and Time of analysis ............. Aug 22, 1995   2:26 PM
         Model Revision Number ................. 19
         Number of modes ....................... 7
         Cutoff frequency (Hz) ................. 33.0
         Weight of contents included ........... Yes
         Pressure stiffening case .............. 0
         Water elevation for buoyancy loads .... Not considered

Response - Date and Time of analysis ........... Aug 22, 1995   2:26 PM
         Model Revision Number ................. 19
         Number of load cases .................. 3
         Load cases analyzed ................... R1 R2 R3
         Date and time of modal analysis ....... Aug 22, 1995   2:26 PM
         Number of modes ....................... 7
         Cutoff frequency (Hz) ................. 33.0
         Model revision of modal analysis ...... 19
         Weight of contents included ........... Yes
         Pressure stiffening case .............. 0
         Water elevation for buoyancy loads .... Not considered
```


CODE COMPLIANCE COMBINATIONS

Combination	Category	Method	Load	Factor	Allowable	Remarks
GR + Max P	Sustain	Sum	Gravity	1.00	Automatic	Default
			Max Long	1.00		
Cold to T1	Expansion	Sum	Thermal 1	1.00	Automatic	Default
Max P	Hoop		Max Hoop	1.00	Automatic	Default
SRSS	Occasion	SRSS	Response 1	1.00	Automatic	User
			Response 2	1.00		
			Response 3	1.00		

OTHER USER COMBINATIONS

Combination	Method	Load	Factor	Remarks
GR	Sum	Gravity	1.00	Default
T1	Sum	Thermal 1	1.00	Default
P1	Sum	Press 1	1.00	Default
SUM	Sum	Gravity	1.00	User
		Thermal 1	1.00	
		Press 1	1.00	
RESP	Abs sum	Response 1	1.00	User
		Response 2	1.00	
		Response 3	1.00	
TOTAL	Abs sum	SUM	1.00	User
		RESP	1.00	

CODE COMPLIANCE

```
Y - Factor ............................ 0.40
Weld efficiency factor ................ 1.00
Range reduction factor ................ 1.00
Design Pressure Factor ................ 1.00
Minimum stress ratio used in reports... 0.00
Include corrosion in stress calcs. .... Y
Include torsion in code stress ........ N
Include axial force in code stress .... N
Longitudinal pressure calculation ..... PD/4t
Include rigorous pressure ............. Y
```


ICF-4PRINT

RESPONSE SPECTRUM LOAD CASES :

Number of load cases analysed : 3

Load case 1 - R1

Missing mass : No
ZPA : No

Combination method : SRSS

X- Spectrum : SC2&3
Multiplier : 1.00

SC2&3

Freq(Hz)	Grav( )	Freq(Hz)	Grav( )	Freq(Hz)	Grav( )
0.100	0.01	0.160	0.02	0.250	0.04
0.400	0.06	0.600	0.09	1.100	0.17
1.640	0.25	8.000	0.25	12.000	0.20
20.000	0.16	33.000	0.12	100.000	0.12

Load case 2 - R2

Missing mass : No
ZPA : No

Combination method : SRSS

Y- Spectrum : SC2&3
Multiplier : 1.00

SC2&3

Freq(Hz)	Grav( )	Freq(Hz)	Grav( )	Freq(Hz)	Grav( )
0.100	0.01	0.160	0.02	0.250	0.04
0.400	0.06	0.600	0.09	1.100	0.17
1.640	0.25	8.000	0.25	12.000	0.20
20.000	0.16	33.000	0.12	100.000	0.12

Load case 3 - R3

Missing mass : No
ZPA : No

Combination method : SRSS

Z- Spectrum : SC2&3
Multiplier : 1.00

SC2&3

Freq(Hz)	Grav( )	Freq(Hz)	Grav( )	Freq(Hz)	Grav( )
0.100	0.01	0.160	0.02	0.250	0.04
0.400	0.06	0.600	0.09	1.100	0.17
1.640	0.25	8.000	0.25	12.000	0.20
20.000	0.16	33.000	0.12	100.000	0.12

F R E Q U E N C I E S

Mode Number	Frequency (Rads/sec)	Frequency (Hertz)	Period (Sec)	Participation factors X	Y	Z
1	50.1612	7.9834	0.125	-0.466	-0.002	-1.635
2	72.4863	11.5365	0.087	0.013	-0.611	0.026
3	73.6238	11.7176	0.085	0.230	0.019	0.689
4	109.0702	17.3591	0.058	-0.616	0.003	0.355
5	119.4096	19.0046	0.053	0.014	-0.306	0.004
6	172.3600	27.4319	0.036	0.319	-0.042	-0.082
7	183.5339	29.2103	0.034	0.355	0.022	0.001

D I S P L A C E M E N T S

Point name	Load combination	TRANSLATIONS (in) X	Y	Z	ROTATIONS (deg) X	Y	Z
*** Segment A begin ***							
A00	GR	0.000	0.000	0.000	0.000	0.000	0.000
	T1	0.000	0.000	0.000	0.000	0.000	0.000
	P1	0.000	0.000	0.000	0.000	0.000	0.000
	SUM	0.000	0.000	0.000	0.000	0.000	0.000
	RESP	0.000	0.000	0.000	0.000	0.000	0.000
	TOTAL	0.000	0.000	0.000	0.000	0.000	0.000
B00	GR	0.000	0.000	0.000	0.000	0.000	0.000
	T1	0.000	-0.002	-0.001	0.036	0.015	-0.021
	P1	0.000	0.000	0.000	0.000	0.000	0.000
	SUM	0.000	-0.002	-0.001	0.036	0.016	-0.021
	RESP	0.000	0.000	0.000	0.003	0.003	0.002
	TOTAL	0.000	0.002	0.001	0.039	0.018	0.023
A01 N	GR	0.000	0.000	0.000	0.000	0.000	0.000
	T1	-0.002	-0.006	-0.003	0.007	0.002	-0.011
	P1	0.000	0.000	0.000	0.000	0.000	0.000
	SUM	-0.002	-0.006	-0.003	0.007	0.002	-0.011
	RESP	0.000	0.000	0.000	0.000	0.001	0.001
	TOTAL	0.002	0.006	0.003	0.007	0.004	0.012
A01 M	GR	0.000	0.000	0.000	0.000	0.000	0.000
	T1	-0.002	-0.006	-0.002	-0.001	-0.001	-0.005
	P1	0.000	0.000	0.000	0.000	0.000	0.000
	SUM	-0.002	-0.006	-0.002	-0.001	-0.001	-0.005
	RESP	0.000	0.000	0.000	0.000	0.001	0.000
	TOTAL	0.002	0.006	0.003	0.001	0.002	0.005
A01 F	GR	0.000	0.000	0.000	0.000	0.000	0.000
	T1	-0.002	-0.007	-0.002	0.000	-0.006	-0.006
	P1	0.000	0.000	0.000	0.000	0.000	0.000
	SUM	-0.002	-0.007	-0.002	0.000	-0.006	-0.005
	RESP	0.000	0.000	0.000	0.000	0.000	0.001
	TOTAL	0.002	0.007	0.002	0.000	0.006	0.006
A02 N	GR	0.000	0.000	0.000	0.000	0.000	0.000
	T1	-0.002	-0.007	-0.002	0.000	-0.006	-0.006
	P1	0.000	0.000	0.000	0.000	0.000	0.000
	SUM	-0.002	-0.007	-0.002	0.000	-0.006	-0.005
	RESP	0.000	0.000	0.000	0.000	0.000	0.001
	TOTAL	0.002	0.007	0.002	0.000	0.006	0.006

D I S P L A C E M E N T S

Point name	Load combination	TRANSLATIONS (in) X	Y	Z	ROTATIONS (deg) X	Y	Z
A02 M	GR	0.000	0.000	0.000	0.000	0.000	0.000
	T1	-0.001	-0.007	-0.001	0.006	-0.008	-0.007
	P1	0.000	0.000	0.000	0.000	0.000	0.000
	SUM	-0.001	-0.007	-0.001	0.006	-0.008	-0.007
	RESP	0.000	0.000	0.000	0.001	0.000	0.001
	TOTAL	0.001	0.007	0.001	0.007	0.009	0.008
A02 F	GR	0.000	0.000	0.000	0.000	0.000	0.000
	T1	-0.001	-0.006	0.000	0.007	-0.008	-0.007
	P1	0.000	0.000	0.000	0.000	0.000	0.000
	SUM	-0.001	-0.006	0.000	0.007	-0.008	-0.007
	RESP	0.000	0.000	0.000	0.001	0.000	0.001
	TOTAL	0.001	0.006	0.001	0.008	0.008	0.008
D00	GR	0.000	0.000	0.000	0.000	0.000	0.000
	T1	-0.001	-0.005	0.000	0.003	-0.006	-0.006
	P1	0.000	0.000	0.000	0.000	0.000	0.000
	SUM	-0.001	-0.005	0.000	0.003	-0.005	-0.006
	RESP	0.000	0.000	0.000	0.001	0.000	0.001
	TOTAL	0.001	0.005	0.000	0.004	0.006	0.007
A03	GR	0.000	0.000	0.000	0.000	0.000	0.000
	T1	0.000	0.000	0.000	0.000	0.000	0.000
	P1	0.000	0.000	0.000	0.000	0.000	0.000
	SUM	0.000	0.000	0.000	0.000	0.000	0.000
	RESP	0.000	0.000	0.000	0.000	0.000	0.000
	TOTAL	0.000	0.000	0.000	0.000	0.000	0.000
*** Segment A end ***							
*** Segment B begin ***							
B00	GR	0.000	0.000	0.000	0.000	0.000	0.000
	T1	0.000	-0.002	-0.001	0.036	0.015	-0.021
	P1	0.000	0.000	0.000	0.000	0.000	0.000
	SUM	0.000	-0.002	-0.001	0.036	0.016	-0.021
	RESP	0.000	0.000	0.000	0.003	0.003	0.002
	TOTAL	0.000	0.002	0.001	0.039	0.018	0.023
B01 N	GR	0.000	0.000	0.000	-0.001	0.000	0.001
	T1	-0.002	0.001	-0.001	0.080	0.028	-0.033
	P1	0.000	0.000	0.000	0.000	0.000	0.000
	SUM	-0.002	0.001	-0.001	0.080	0.028	-0.032
	RESP	0.000	0.000	0.000	0.008	0.004	0.003
	TOTAL	0.002	0.002	0.001	0.088	0.032	0.036

D I S P L A C E M E N T S

Point name	Load combination	TRANSLATIONS (in) X	Y	Z	ROTATIONS (deg) X	Y	Z
B01 M	GR	0.000	0.000	0.000	-0.001	0.000	0.001
	T1	-0.004	0.004	-0.002	0.149	0.059	-0.088
	P1	0.000	0.000	0.000	0.001	0.000	0.000
	SUM	-0.004	0.004	-0.002	0.149	0.059	-0.087
	RESP	0.000	0.001	0.000	0.016	0.007	0.010
	TOTAL	0.004	0.005	0.002	0.165	0.067	0.097
B01 F	GR	0.000	0.000	0.000	-0.001	0.000	0.000
	T1	-0.007	0.006	-0.006	0.221	0.063	-0.098
	P1	0.000	0.000	0.000	0.001	0.000	0.000
	SUM	-0.007	0.006	-0.006	0.221	0.063	-0.099
	RESP	0.001	0.001	0.000	0.025	0.007	0.012
	TOTAL	0.008	0.007	0.007	0.246	0.070	0.111
C00	GR	0.000	0.000	0.000	-0.001	0.000	0.000
	T1	-0.011	0.004	-0.016	0.244	0.082	-0.101
	P1	0.000	0.000	0.000	0.001	0.000	0.000
	SUM	-0.011	0.004	-0.016	0.245	0.082	-0.101
	RESP	0.001	0.001	0.002	0.028	0.009	0.012
	TOTAL	0.012	0.005	0.018	0.273	0.091	0.113
B02	GR	0.000	0.000	0.000	-0.001	0.000	0.000
	T1	-0.015	0.003	-0.029	0.293	0.082	-0.088
	P1	0.000	0.000	0.000	0.001	0.000	0.000
	SUM	-0.015	0.003	-0.029	0.294	0.082	-0.088
	RESP	0.002	0.001	0.003	0.034	0.009	0.011
	TOTAL	0.017	0.004	0.032	0.328	0.091	0.099
B03	GR	0.000	0.000	0.000	-0.001	0.000	0.000
	T1	-0.021	0.001	-0.050	0.319	0.082	-0.079
	P1	0.000	0.000	0.000	0.002	0.000	0.000
	SUM	-0.021	0.001	-0.050	0.320	0.082	-0.080
	RESP	0.002	0.001	0.005	0.037	0.009	0.011
	TOTAL	0.024	0.002	0.056	0.356	0.092	0.091
B04	GR	0.000	0.000	0.000	-0.001	0.000	0.000
	T1	-0.024	0.000	-0.061	0.323	0.082	-0.077
	P1	0.000	0.000	0.000	0.002	0.000	0.000
	SUM	-0.024	0.000	-0.062	0.324	0.082	-0.078
	RESP	0.003	0.001	0.007	0.037	0.009	0.011
	TOTAL	0.027	0.001	0.068	0.361	0.092	0.089

D I S P L A C E M E N T S

Point name	Load combination	TRANSLATIONS (in) X	Y	Z	ROTATIONS (deg) X	Y	Z
B05 N	GR	0.000	0.000	0.000	-0.001	0.000	0.000
	T1	-0.053	-0.013	-0.194	0.271	0.082	-0.064
	P1	0.000	0.000	-0.001	0.001	0.000	0.000
	SUM	-0.053	-0.013	-0.195	0.271	0.082	-0.064
	RESP	0.007	0.001	0.022	0.032	0.010	0.010
	TOTAL	0.060	0.014	0.217	0.303	0.092	0.074
B05 M	GR	0.000	0.000	0.000	-0.001	0.000	0.000
	T1	-0.054	-0.019	-0.206	0.163	0.082	-0.061
	P1	0.000	0.000	-0.001	0.001	0.000	0.000
	SUM	-0.054	-0.019	-0.206	0.162	0.082	-0.061
	RESP	0.007	0.000	0.024	0.021	0.010	0.010
	TOTAL	0.062	0.020	0.230	0.183	0.093	0.071
B05 F	GR	0.000	0.000	0.000	-0.002	0.000	0.000
	T1	-0.051	-0.026	-0.207	0.050	0.081	-0.061
	P1	0.000	0.000	-0.001	0.000	0.000	0.000
	SUM	-0.051	-0.026	-0.207	0.048	0.082	-0.061
	RESP	0.007	0.000	0.024	0.009	0.011	0.010
	TOTAL	0.058	0.026	0.231	0.057	0.092	0.070
B06	GR	0.000	0.000	0.000	0.006	0.000	0.001
	T1	0.000	0.000	-0.185	-0.058	0.050	-0.056
	P1	0.000	0.000	-0.001	0.000	0.000	0.000
	SUM	0.000	0.000	-0.185	-0.052	0.050	-0.055
	RESP	0.000	0.000	0.024	0.004	0.007	0.009
	TOTAL	0.000	0.000	0.209	0.056	0.057	0.065
B07	GR	0.000	0.000	0.000	-0.002	0.000	0.002
	T1	0.000	0.000	-0.121	0.015	-0.017	-0.042
	P1	0.000	0.000	-0.001	0.000	0.000	0.000
	SUM	0.000	0.000	-0.121	0.013	-0.017	-0.040
	RESP	0.000	0.000	0.024	0.001	0.002	0.008
	TOTAL	0.000	0.000	0.145	0.014	0.019	0.048
B08	GR	0.000	0.000	0.000	0.002	0.000	0.003
	T1	0.000	0.000	-0.057	-0.003	0.017	-0.028
	P1	0.000	0.000	0.000	0.000	0.000	0.000
	SUM	0.000	0.000	-0.057	-0.001	0.017	-0.025
	RESP	0.000	0.000	0.024	0.001	0.002	0.008
	TOTAL	0.000	0.000	0.081	0.002	0.019	0.032

D I S P L A C E M E N T S

Point name	Load combination	TRANSLATIONS (in) X	Y	Z	ROTATIONS (deg) X	Y	Z
B09	GR	0.000	0.000	0.000	-0.006	0.000	0.005
	T1	0.000	0.000	0.006	-0.001	-0.052	-0.014
	P1	0.000	0.000	0.000	0.000	0.000	0.000
	SUM	0.000	0.000	0.007	-0.008	-0.052	-0.009
	RESP	0.000	0.000	0.024	0.002	0.008	0.007
	TOTAL	0.000	0.000	0.031	0.010	0.059	0.016
B10 N	GR	0.000	0.001	0.000	0.001	0.000	0.005
	T1	-0.020	0.001	0.017	-0.003	-0.045	-0.011
	P1	0.000	0.000	0.000	0.000	0.000	0.000
	SUM	-0.021	0.001	0.018	-0.002	-0.045	-0.007
	RESP	0.004	0.001	0.024	0.003	0.012	0.007
	TOTAL	0.024	0.002	0.042	0.005	0.056	0.013
B10 M	GR	0.000	0.000	0.000	0.003	0.000	0.005
	T1	-0.025	0.001	0.026	-0.004	-0.002	-0.010
	P1	0.000	0.000	0.000	0.000	0.000	0.000
	SUM	-0.025	0.002	0.026	-0.001	-0.002	-0.005
	RESP	0.007	0.001	0.023	0.003	0.015	0.006
	TOTAL	0.032	0.003	0.049	0.004	0.017	0.011
B10 F	GR	0.000	0.000	0.000	0.004	0.000	0.006
	T1	-0.017	0.001	0.028	-0.005	0.045	-0.008
	P1	0.000	0.000	0.000	0.000	0.000	0.000
	SUM	-0.017	0.001	0.029	0.000	0.046	-0.003
	RESP	0.010	0.001	0.021	0.003	0.018	0.006
	TOTAL	0.027	0.002	0.050	0.004	0.063	0.009
B11	GR	0.000	0.000	0.000	0.009	0.000	0.004
	T1	0.016	0.000	0.016	-0.005	0.079	-0.007
	P1	0.000	0.000	0.000	0.000	0.000	0.000
	SUM	0.016	0.000	0.016	0.005	0.080	-0.003
	RESP	0.015	0.000	0.015	0.003	0.016	0.007
	TOTAL	0.031	0.000	0.031	0.008	0.096	0.010
B12	GR	0.000	0.000	0.000	0.024	0.000	0.004
	T1	0.061	0.000	0.061	-0.003	-0.143	-0.002
	P1	0.000	0.000	0.000	0.000	-0.001	0.000
	SUM	0.061	0.000	0.061	0.021	-0.144	0.002
	RESP	0.015	0.000	0.015	0.010	0.018	0.002
	TOTAL	0.076	0.000	0.076	0.031	0.162	0.004

D I S P L A C E M E N T S

Point name	Load combination	TRANSLATIONS (in) X	Y	Z	ROTATIONS (deg) X	Y	Z
B13 N	GR	0.000	-0.009	0.000	0.038	0.000	-0.007
	T1	0.028	0.000	0.108	-0.003	-0.153	-0.001
	P1	0.000	0.000	0.000	0.000	-0.001	0.000
	SUM	0.029	-0.008	0.109	0.035	-0.154	-0.008
	RESP	0.011	0.003	0.020	0.012	0.017	0.000
	TOTAL	0.039	0.011	0.129	0.048	0.171	0.009
B13 M	GR	0.000	-0.016	0.000	0.042	0.000	-0.009
	T1	0.016	0.000	0.138	-0.002	-0.096	-0.001
	P1	0.000	0.000	0.001	0.000	0.000	0.000
	SUM	0.017	-0.015	0.139	0.040	-0.096	-0.009
	RESP	0.009	0.005	0.023	0.013	0.009	0.001
	TOTAL	0.025	0.020	0.162	0.053	0.105	0.010
B13 F	GR	0.000	-0.020	0.000	0.044	0.000	-0.005
	T1	0.020	0.000	0.153	-0.002	-0.013	-0.001
	P1	0.000	0.000	0.001	0.000	0.000	0.000
	SUM	0.021	-0.019	0.154	0.042	-0.013	-0.006
	RESP	0.009	0.005	0.023	0.013	0.005	0.000
	TOTAL	0.029	0.025	0.177	0.056	0.017	0.006
E00	GR	0.000	-0.015	0.000	0.049	0.000	0.017
	T1	0.044	0.000	0.068	0.000	0.209	0.000
	P1	0.000	0.000	0.000	0.000	0.001	0.000
	SUM	0.045	-0.015	0.068	0.049	0.211	0.017
	RESP	0.008	0.004	0.008	0.015	0.033	0.004
	TOTAL	0.053	0.019	0.076	0.064	0.244	0.021
B14	GR	0.000	0.000	0.000	0.000	0.000	0.000
	T1	0.000	0.000	0.000	0.000	0.000	0.000
	P1	0.000	0.000	0.000	0.000	0.000	0.000
	SUM	0.000	0.000	0.000	0.000	0.000	0.000
	RESP	0.000	0.000	0.000	0.000	0.000	0.000
	TOTAL	0.000	0.000	0.000	0.000	0.000	0.000

*** Segment B end ***

*** Segment C begin ***

C00	GR	0.000	0.000	0.000	-0.001	0.000	0.000
	T1	-0.011	0.004	-0.016	0.244	0.082	-0.101
	P1	0.000	0.000	0.000	0.001	0.000	0.000
	SUM	-0.011	0.004	-0.016	0.245	0.082	-0.101
	RESP	0.001	0.001	0.002	0.028	0.009	0.012
	TOTAL	0.012	0.005	0.018	0.273	0.091	0.113

D I S P L A C E M E N T S

Point name	Load combination	TRANSLATIONS (in) X	Y	Z	ROTATIONS (deg) X	Y	Z
C01 N	GR	0.000	0.000	0.000	-0.001	0.000	0.000
	T1	-0.009	0.001	-0.013	0.222	0.090	-0.112
	P1	0.000	0.000	0.000	0.001	0.000	-0.001
	SUM	-0.009	0.001	-0.013	0.222	0.090	-0.113
	RESP	0.001	0.000	0.001	0.026	0.009	0.012
	TOTAL	0.010	0.001	0.014	0.248	0.100	0.125
C01 M	GR	0.000	0.000	0.000	-0.001	0.000	0.000
	T1	-0.007	0.000	-0.008	0.184	0.072	-0.129
	P1	0.000	0.000	0.000	0.001	0.000	-0.001
	SUM	-0.007	0.000	-0.008	0.184	0.072	-0.130
	RESP	0.001	0.000	0.001	0.023	0.006	0.013
	TOTAL	0.007	0.000	0.009	0.206	0.079	0.143
C01 F	GR	0.000	0.000	0.000	-0.001	0.000	0.000
	T1	-0.004	0.001	-0.004	0.133	0.047	-0.101
	P1	0.000	0.000	0.000	0.001	0.000	0.000
	SUM	-0.004	0.001	-0.004	0.133	0.047	-0.101
	RESP	0.000	0.000	0.000	0.017	0.003	0.010
	TOTAL	0.004	0.001	0.004	0.149	0.051	0.111
C02 N	GR	0.000	0.000	0.000	-0.001	0.000	0.000
	T1	-0.004	0.001	-0.004	0.133	0.047	-0.101
	P1	0.000	0.000	0.000	0.001	0.000	0.000
	SUM	-0.004	0.001	-0.004	0.132	0.047	-0.101
	RESP	0.000	0.000	0.000	0.017	0.003	0.010
	TOTAL	0.004	0.001	0.004	0.149	0.051	0.110
C02 M	GR	0.000	0.000	0.000	-0.001	0.000	0.000
	T1	-0.001	0.000	-0.001	0.065	0.033	-0.049
	P1	0.000	0.000	0.000	0.000	0.000	0.000
	SUM	-0.001	0.000	-0.001	0.065	0.033	-0.048
	RESP	0.000	0.000	0.000	0.008	0.002	0.005
	TOTAL	0.001	0.000	0.001	0.073	0.035	0.053
C02 F	GR	0.000	0.000	0.000	0.000	0.000	0.000
	T1	0.000	0.000	0.000	0.001	0.001	-0.001
	P1	0.000	0.000	0.000	0.000	0.000	0.000
	SUM	0.000	0.000	0.000	0.001	0.001	-0.001
	RESP	0.000	0.000	0.000	0.000	0.000	0.000
	TOTAL	0.000	0.000	0.000	0.001	0.001	0.001

D I S P L A C E M E N T S

Point name	Load combination	TRANSLATIONS (in) X	Y	Z	ROTATIONS (deg) X	Y	Z
C03	GR	0.000	0.000	0.000	0.000	0.000	0.000
	T1	0.000	0.000	0.000	0.000	0.000	0.000
	P1	0.000	0.000	0.000	0.000	0.000	0.000
	SUM	0.000	0.000	0.000	0.000	0.000	0.000
	RESP	0.000	0.000	0.000	0.000	0.000	0.000
	TOTAL	0.000	0.000	0.000	0.000	0.000	0.000

*** Segment C end ***

*** Segment D begin ***

D00	GR	0.000	0.000	0.000	0.000	0.000	0.000
	T1	-0.001	-0.005	0.000	0.003	-0.006	-0.006
	P1	0.000	0.000	0.000	0.000	0.000	0.000
	SUM	-0.001	-0.005	0.000	0.003	-0.005	-0.006
	RESP	0.000	0.000	0.000	0.001	0.000	0.001
	TOTAL	0.001	0.005	0.000	0.004	0.006	0.007
D01 N	GR	0.000	0.000	0.000	0.000	0.000	0.000
	T1	0.000	-0.005	-0.001	0.002	-0.005	-0.006
	P1	0.000	0.000	0.000	0.000	0.000	0.000
	SUM	0.000	-0.005	-0.001	0.002	-0.005	-0.006
	RESP	0.000	0.000	0.000	0.001	0.000	0.001
	TOTAL	0.000	0.005	0.001	0.002	0.006	0.007
D01 M	GR	0.000	0.000	0.000	0.000	0.000	0.000
	T1	0.000	-0.004	-0.002	0.010	-0.003	-0.004
	P1	0.000	0.000	0.000	0.000	0.000	0.000
	SUM	0.000	-0.004	-0.002	0.010	-0.003	-0.004
	RESP	0.000	0.000	0.000	0.000	0.000	0.001
	TOTAL	0.000	0.004	0.002	0.011	0.003	0.005
D01 F	GR	0.000	0.000	0.000	0.000	0.000	0.000
	T1	0.000	-0.003	-0.002	0.018	-0.002	-0.002
	P1	0.000	0.000	0.000	0.000	0.000	0.000
	SUM	0.000	-0.003	-0.002	0.018	-0.002	-0.002
	RESP	0.000	0.000	0.000	0.001	0.000	0.000
	TOTAL	0.000	0.003	0.002	0.019	0.002	0.002
D02	GR	0.000	0.000	0.000	0.000	0.000	0.000
	T1	0.000	0.000	0.000	0.000	0.000	0.000
	P1	0.000	0.000	0.000	0.000	0.000	0.000
	SUM	0.000	0.000	0.000	0.000	0.000	0.000
	RESP	0.000	0.000	0.000	0.000	0.000	0.000
	TOTAL	0.000	0.000	0.000	0.000	0.000	0.000

*** Segment D end ***

*** Segment E begin ***

D I S P L A C E M E N T S

Point name	Load combination	TRANSLATIONS (in) X	Y	Z	ROTATIONS (deg) X	Y	Z
E00	GR	0.000	-0.015	0.000	0.049	0.000	0.017
	T1	0.044	0.000	0.068	0.000	0.209	0.000
	P1	0.000	0.000	0.000	0.000	0.001	0.000
	SUM	0.045	-0.015	0.068	0.049	0.211	0.017
	RESP	0.008	0.004	0.008	0.015	0.033	0.004
	TOTAL	0.053	0.019	0.076	0.064	0.244	0.021
E01 N	GR	0.000	-0.070	0.000	0.079	0.000	0.012
	T1	0.172	0.000	0.235	0.000	0.185	0.000
	P1	0.001	0.000	0.001	0.000	0.001	0.000
	SUM	0.173	-0.070	0.236	0.078	0.186	0.012
	RESP	0.035	0.023	0.035	0.028	0.039	0.005
	TOTAL	0.208	0.093	0.272	0.107	0.224	0.017
E01 M	GR	0.000	-0.073	0.000	0.079	0.000	0.009
	T1	0.174	0.000	0.244	0.000	0.118	0.000
	P1	0.001	0.000	0.001	0.000	0.001	0.000
	SUM	0.175	-0.072	0.245	0.079	0.118	0.009
	RESP	0.036	0.024	0.037	0.028	0.027	0.004
	TOTAL	0.211	0.096	0.282	0.107	0.146	0.013
E01 F	GR	0.000	-0.071	0.000	0.082	0.000	0.004
	T1	0.171	0.000	0.248	0.000	0.049	0.000
	P1	0.001	0.000	0.001	0.000	0.000	0.000
	SUM	0.172	-0.071	0.249	0.082	0.049	0.004
	RESP	0.036	0.023	0.038	0.029	0.015	0.003
	TOTAL	0.207	0.094	0.288	0.111	0.064	0.007
E02	GR	0.000	0.000	0.000	0.063	0.000	0.019
	T1	0.181	0.000	0.181	0.000	-0.068	0.000
	P1	0.001	0.000	0.001	0.000	0.000	0.000
	SUM	0.183	0.000	0.183	0.063	-0.069	0.019
	RESP	0.037	0.000	0.037	0.022	0.007	0.006
	TOTAL	0.220	0.000	0.220	0.085	0.076	0.025
E03	GR	0.000	0.000	0.000	0.028	0.000	0.047
	T1	0.136	0.000	0.136	0.000	0.075	0.001
	P1	0.001	0.000	0.001	0.000	0.000	0.000
	SUM	0.137	0.000	0.137	0.028	0.076	0.047
	RESP	0.037	0.000	0.037	0.009	0.010	0.015
	TOTAL	0.174	0.000	0.174	0.037	0.086	0.062

D I S P L A C E M E N T S

Point name	Load combination	TRANSLATIONS (in) X	Y	Z	ROTATIONS (deg) X	Y	Z
E04 N	GR	0.000	-0.019	0.000	0.037	0.000	0.032
	T1	-0.002	0.000	0.203	0.001	0.045	0.001
	P1	0.000	0.000	0.001	0.000	0.000	0.000
	SUM	-0.002	-0.020	0.204	0.037	0.046	0.033
	RESP	0.022	0.005	0.055	0.009	0.027	0.012
	TOTAL	0.024	0.025	0.259	0.046	0.072	0.045
E04 M	GR	0.000	-0.019	0.000	0.037	0.000	0.032
	T1	-0.004	0.000	0.202	0.001	0.029	0.001
	P1	0.000	0.000	0.001	0.000	0.000	0.000
	SUM	-0.004	-0.020	0.204	0.037	0.029	0.033
	RESP	0.021	0.005	0.055	0.009	0.030	0.012
	TOTAL	0.025	0.025	0.259	0.047	0.059	0.045
E04 F	GR	0.000	-0.018	0.000	0.037	0.000	0.032
	T1	-0.005	0.000	0.202	0.001	0.013	0.001
	P1	0.000	0.000	0.001	0.000	0.000	0.000
	SUM	-0.004	-0.019	0.203	0.037	0.013	0.033
	RESP	0.020	0.005	0.055	0.009	0.033	0.012
	TOTAL	0.025	0.024	0.258	0.047	0.046	0.044
E05	GR	0.000	0.000	0.000	0.017	0.000	0.030
	T1	0.000	0.000	0.183	0.001	-0.014	0.001
	P1	0.000	0.000	0.001	0.000	0.000	0.000
	SUM	0.000	0.000	0.185	0.018	-0.014	0.030
	RESP	0.000	0.000	0.055	0.006	0.027	0.011
	TOTAL	0.000	0.000	0.240	0.024	0.041	0.041
E06	GR	0.000	0.000	0.000	-0.004	0.000	0.022
	T1	0.000	0.000	0.119	-0.002	0.004	0.001
	P1	0.000	0.000	0.001	0.000	0.000	0.000
	SUM	0.000	0.000	0.120	-0.006	0.004	0.022
	RESP	0.000	0.000	0.055	0.002	0.007	0.009
	TOTAL	0.000	0.000	0.175	0.009	0.011	0.031
E07	GR	0.000	0.000	0.000	-0.001	0.000	0.013
	T1	0.000	0.000	0.055	0.009	-0.001	0.000
	P1	0.000	0.000	0.000	0.000	0.000	0.000
	SUM	0.000	0.000	0.055	0.008	-0.001	0.014
	RESP	0.000	0.000	0.055	0.004	0.002	0.006
	TOTAL	0.000	0.000	0.110	0.012	0.003	0.020

D I S P L A C E M E N T S

Point name	Load combination	TRANSLATIONS (in) X	Y	Z	ROTATIONS (deg) X	Y	Z
E08	GR	0.000	0.000	0.000	0.006	-0.001	0.005
	T1	0.000	0.000	-0.009	-0.034	0.000	0.000
	P1	0.000	0.000	0.000	0.000	0.000	0.000
	SUM	0.000	0.000	-0.009	-0.028	0.000	0.005
	RESP	0.000	0.000	0.055	0.012	0.002	0.004
	TOTAL	0.000	0.000	0.064	0.040	0.002	0.010
E09 N	GR	0.001	0.000	0.000	-0.001	-0.001	0.002
	T1	0.000	-0.027	-0.033	-0.014	0.000	0.000
	P1	0.000	0.000	0.000	0.000	0.000	0.000
	SUM	0.001	-0.027	-0.033	-0.015	-0.001	0.002
	RESP	0.002	0.003	0.054	0.021	0.002	0.004
	TOTAL	0.002	0.030	0.087	0.036	0.003	0.006
E09 M	GR	0.001	0.000	0.000	-0.001	-0.001	0.002
	T1	0.000	-0.026	-0.035	0.017	0.000	0.000
	P1	0.000	0.000	0.000	0.000	0.000	0.000
	SUM	0.001	-0.026	-0.035	0.016	-0.001	0.002
	RESP	0.002	0.001	0.053	0.051	0.002	0.004
	TOTAL	0.002	0.028	0.088	0.068	0.003	0.006
E09 F	GR	0.001	0.000	0.000	-0.001	-0.001	0.002
	T1	0.000	-0.024	-0.034	0.046	0.000	0.000
	P1	0.000	0.000	0.000	0.000	0.000	0.000
	SUM	0.000	-0.024	-0.033	0.045	-0.001	0.001
	RESP	0.002	0.000	0.050	0.078	0.002	0.004
	TOTAL	0.002	0.024	0.083	0.124	0.002	0.005
E10	GR	0.000	0.000	0.000	0.000	0.000	0.000
	T1	0.000	0.000	0.000	0.000	0.000	0.000
	P1	0.000	0.000	0.000	0.000	0.000	0.000
	SUM	0.000	0.000	0.000	0.000	0.000	0.000
	RESP	0.000	0.000	0.000	0.000	0.000	0.000
	TOTAL	0.000	0.000	0.000	0.000	0.000	0.000

*** Segment E end ***

S U P P O R T F O R C E S

Point/ Supp. ID	Connect/ Type	Load Combination	LOCAL Dirn	Force	Deform	GLOBAL Dirn	Force	Deform
B06		GR	down	100	0.000	X	0	0.000
B06 1	Guide		left	0	0.000	Y	-100	0.000
Stiff	:RIGID					Z		0.000
		T1	down	330	0.000	X	-65	0.000
			rght	65	0.000	Y	-330	0.000
						Z		-0.185
		P1	down	2	0.000	X	0	0.000
			rght	0	0.000	Y	-2	0.000
						Z		-0.001
		SUM	down	431	0.000	X	-65	0.000
			rght	65	0.000	Y	-431	0.000
						Z		-0.185
		RESP	down	31	0.000	X	11	0.000
			left	11	0.000	Y	31	0.000
						Z		0.024
		TOTAL	down	462	0.000	X	76	0.000
			left	76	0.000	Y	462	0.000
						Z		0.209
B07		GR	down	120	0.000	X	0	0.000
B07 1	Guide		rght	0	0.000	Y	-120	0.000
Stiff	:RIGID					Z		0.000
		T1	up	34	0.000	X	20	0.000
			left	20	0.000	Y	34	0.000
						Z		-0.121
		P1	up	0	0.000	X	0	0.000
			left	0	0.000	Y	0	0.000
						Z		-0.001
		SUM	down	86	0.000	X	20	0.000
			left	20	0.000	Y	-86	0.000
						Z		-0.121
		RESP	down	2	0.000	X	3	0.000
			left	3	0.000	Y	2	0.000
						Z		0.024
		TOTAL	down	89	0.000	X	24	0.000
			left	24	0.000	Y	89	0.000
						Z		0.145

SUPPORT FORCES

Point/ Supp. ID	Connect/ Type	Load Combination	LOCAL Dirn	LOCAL Force	LOCAL Deform	GLOBAL Dirn	GLOBAL Force	GLOBAL Deform
B08		GR	down	120	0.000	X	0	0.000
B08 1	Guide		left	0	0.000	Y	-120	0.000
Stiff	:RIGID					Z		0.000
		T1	down	10	0.000	X	22	0.000
			left	22	0.000	Y	-10	0.000
						Z		-0.057
		P1	down	0	0.000	X	0	0.000
			left	0	0.000	Y	0	0.000
						Z		0.000
		SUM	down	131	0.000	X	22	0.000
			left	22	0.000	Y	-131	0.000
						Z		-0.057
		RESP	down	2	0.000	X	4	0.000
			left	4	0.000	Y	2	0.000
						Z		0.024
		TOTAL	down	132	0.000	X	26	0.000
			left	26	0.000	Y	132	0.000
						Z		0.081
B09		GR	down	96	0.000	X	-1	0.000
B09 1	Guide		rght	1	0.000	Y	-96	0.000
Stiff	:RIGID					Z		0.000
		T1	up	5	0.000	X	-273	0.000
			rght	273	0.000	Y	5	0.000
						Z		0.006
		P1	up	0	0.000	X	-1	0.000
			rght	1	0.000	Y	0	0.000
						Z		0.000
		SUM	down	91	0.000	X	-275	0.000
			rght	275	0.000	Y	-91	0.000
						Z		0.007
		RESP	down	3	0.000	X	19	0.000
			left	19	0.000	Y	3	0.000
						Z		0.024
		TOTAL	down	94	0.000	X	294	0.000
			left	294	0.000	Y	94	0.000
						Z		0.031
B11		GR	down	82	0.000	X	-1	0.000

SUPPORT FORCES

Point/ Supp. ID	Connect/ Type	Load Combination	LOCAL Dirn	LOCAL Force	LOCAL Deform	GLOBAL Dirn	GLOBAL Force	GLOBAL Deform
B11 1	Guide		rght	1	0.000	Y	-82	0.000
Stiff	:RIGID					Z	1	0.000
		T1	down	2	0.000	X	-97	0.016
			rght	138	0.000	Y	-2	0.000
						Z	97	0.016
		P1	down	0	0.000	X	0	0.000
			rght	1	0.000	Y	0	0.000
						Z	0	0.000
		SUM	down	84	0.000	X	-98	0.016
			rght	139	0.000	Y	-84	0.000
						Z	98	0.016
		RESP	down	3	0.000	X	17	0.015
			left	24	0.000	Y	3	0.000
						Z	17	0.015
		TOTAL	down	87	0.000	X	115	0.031
			left	163	0.000	Y	87	0.000
						Z	115	0.031
B12		GR	down	142	0.000	X	-1	0.000
B12 1	Guide		rght	1	0.000	Y	-142	0.000
Stiff	:RIGID					Z	1	0.000
		T1	down	0	0.000	X	-333	0.061
			rght	470	0.000	Y	0	0.000
						Z	333	0.061
		P1	down	0	0.000	X	-2	0.000
			rght	2	0.000	Y	0	0.000
						Z	2	0.000
		SUM	down	142	0.000	X	-335	0.061
			rght	474	0.000	Y	-142	0.000
						Z	335	0.061
		RESP	down	9	0.000	X	39	0.015
			left	55	0.000	Y	9	0.000
						Z	39	0.015
		TOTAL	down	151	0.000	X	374	0.076
			left	529	0.000	Y	151	0.000
						Z	374	0.076
E02		GR	down	145	0.000	X	0	0.000
E02 1	Guide		left	0	0.000	Y	-145	0.000

SUPPORT FORCES

Point/ Supp. ID	Connect/ Type	Load Combination	LOCAL Dirn	LOCAL Force	LOCAL Deform	GLOBAL Dirn	GLOBAL Force	GLOBAL Deform
Stiff	:RIGID					Z	0	0.000
		T1	up	0	0.000	X	-72	0.181
			left	102	0.000	Y	0	0.000
						Z	72	0.181
		P1	up	0	0.000	X	0	0.001
			left	0	0.000	Y	0	0.000
						Z	0	0.001
		SUM	down	145	0.000	X	-73	0.183
			left	103	0.000	Y	-145	0.000
						Z	73	0.183
		RESP	down	14	0.000	X	13	0.037
			left	19	0.000	Y	14	0.000
						Z	13	0.037
		TOTAL	down	159	0.000	X	86	0.220
			left	122	0.000	Y	159	0.000
						Z	86	0.220
E03		GR	down	107	0.000	X	0	0.000
E03 1	Guide		left	0	0.000	Y	-107	0.000
Stiff	:RIGID					Z	0	0.000
		T1	down	0	0.000	X	-41	0.136
			left	57	0.000	Y	0	0.000
						Z	41	0.136
		P1	down	0	0.000	X	0	0.001
			left	0	0.000	Y	0	0.000
						Z	0	0.001
		SUM	down	107	0.000	X	-41	0.137
			left	58	0.000	Y	-107	0.000
						Z	41	0.137
		RESP	down	6	0.000	X	9	0.037
			left	13	0.000	Y	6	0.000
						Z	9	0.037
		TOTAL	down	114	0.000	X	50	0.174
			left	71	0.000	Y	114	0.000
						Z	50	0.174
E05		GR	down	137	0.000	X	0	0.000
E05 1	Guide		rght	0	0.000	Y	-137	0.000
Stiff	:RIGID					Z		0.000

SUPPORT FORCES

Point/ Supp. ID	Connect/ Type	Load Combination	LOCAL Dirn	LOCAL Force	LOCAL Deform	GLOBAL Dirn	GLOBAL Force	GLOBAL Deform
		T1	up	1	0.000	X	-109	0.000
			left	109	0.000	Y	1	0.000
						Z		0.183
		P1	up	0	0.000	X	-1	0.000
			left	1	0.000	Y	0	0.000
						Z		0.001
		SUM	down	136	0.000	X	-109	0.000
			left	109	0.000	Y	-136	0.000
						Z		0.185
		RESP	down	11	0.000	X	66	0.000
			left	66	0.000	Y	11	0.000
						Z		0.055
		TOTAL	down	147	0.000	X	175	0.000
			left	175	0.000	Y	147	0.000
						Z		0.240
E06		GR	down	107	0.000	X	0	0.000
E06 1	Guide		rght	0	0.000	Y	-107	0.000
Stiff	:RIGID					Z		0.000
		T1	down	5	0.000	X	8	0.000
			rght	8	0.000	Y	-5	0.000
						Z		0.119
		P1	down	0	0.000	X	0	0.000
			rght	0	0.000	Y	0	0.000
						Z		0.001
		SUM	down	112	0.000	X	8	0.000
			rght	8	0.000	Y	-112	0.000
						Z		0.120
		RESP	down	5	0.000	X	16	0.000
			left	16	0.000	Y	5	0.000
						Z		0.055
		TOTAL	down	117	0.000	X	24	0.000
			left	24	0.000	Y	117	0.000
						Z		0.175
E07		GR	down	124	0.000	X	0	0.000
E07 1	Guide		left	0	0.000	Y	-124	0.000
Stiff	:RIGID					Z		0.000
		T1	up	19	0.000	X	-2	0.000

SUPPORT FORCES

Point/ Supp. ID	Connect/ Type	Load Combination	LOCAL Dirn	LOCAL Force	LOCAL Deform	GLOBAL Dirn	GLOBAL Force	GLOBAL Deform
			left	2	0.000	Y	19	0.000
						Z		0.055
		P1	up	0	0.000	X	0	0.000
			left	0	0.000	Y	0	0.000
						Z		0.000
		SUM	down	105	0.000	X	-2	0.000
			left	2	0.000	Y	-105	0.000
						Z		0.055
		RESP	down	8	0.000	X	5	0.000
			left	5	0.000	Y	8	0.000
						Z		0.055
		TOTAL	down	113	0.000	X	7	0.000
			left	7	0.000	Y	113	0.000
						Z		0.110
E08		GR	down	98	0.000	X	1	0.000
E08 1	Guide		rght	1	0.000	Y	-98	0.000
Stiff	:RIGID					Z		0.000
		T1	down	110	0.000	X	1	0.000
			rght	1	0.000	Y	-110	0.000
						Z		-0.009
		P1	down	1	0.000	X	0	0.000
			rght	0	0.000	Y	-1	0.000
						Z		0.000
		SUM	down	209	0.000	X	2	0.000
			rght	2	0.000	Y	-209	0.000
						Z		-0.009
		RESP	down	80	0.000	X	4	0.000
			left	4	0.000	Y	80	0.000
						Z		0.055
		TOTAL	down	289	0.000	X	6	0.000
			left	6	0.000	Y	289	0.000
						Z		0.064

RESTRAINT REACTIONS

Point name	Load combination	FORCES (lb) X	Y	Z	Result	MOMENTS (ft-lb) X	Y	Z	Result
A00	Anchor								
	GR	-5	-35	-6	35	-2	0	2	3
	T1	408	1378	509	1524	187	88	-91	226
	P1	2	6	2	7	1	0	0	1
	SUM	405	1349	505	1497	186	88	-90	225
	RESP	23	130	63	147	16	15	11	25
	TOTAL	428	1480	569	1642	202	103	101	249
A03	Anchor								
	GR	1	-2	1	3	-1	0	1	1
	T1	-33	-404	42	407	-4	-14	-32	35
	P1	0	-2	0	2	0	0	0	0
	SUM	-33	-408	43	412	-5	-14	-31	35
	RESP	6	45	12	47	7	1	5	9
	TOTAL	38	453	55	458	12	15	37	41
B06	Guide								
	GR	0	-100	0	100	0	0	0	0
	T1	-65	-330	0	336	0	0	0	0
	P1	0	-2	0	2	0	0	0	0
	SUM	-65	-431	0	436	0	0	0	0
	RESP	11	31	0	33	0	0	0	0
	TOTAL	76	462	0	468	0	0	0	0
B07	Guide								
	GR	0	-120	0	120	0	0	0	0
	T1	20	34	0	39	0	0	0	0
	P1	0	0	0	0	0	0	0	0
	SUM	20	-86	0	89	0	0	0	0
	RESP	3	2	0	4	0	0	0	0
	TOTAL	24	89	0	92	0	0	0	0
B08	Guide								
	GR	0	-120	0	120	0	0	0	0
	T1	22	-10	0	24	0	0	0	0
	P1	0	0	0	0	0	0	0	0
	SUM	22	-131	0	132	0	0	0	0
	RESP	4	2	0	4	0	0	0	0
	TOTAL	26	132	0	135	0	0	0	0

R E S T R A I N T R E A C T I O N S

Point name	Load combination	FORCES (lb) X	Y	Z	Result	MOMENTS (ft-lb) X	Y	Z	Result
B09	Guide								
	GR	-1	-96	0	96	0	0	0	0
	T1	-273	5	0	273	0	0	0	0
	P1	-1	0	0	1	0	0	0	0
	SUM	-275	-91	0	290	0	0	0	0
	RESP	19	3	0	19	0	0	0	0
	TOTAL	294	94	0	308	0	0	0	0
B11	Guide								
	GR	-1	-82	1	82	0	0	0	0
	T1	-97	-2	97	138	0	0	0	0
	P1	0	0	0	1	0	0	0	0
	SUM	-98	-84	98	162	0	0	0	0
	RESP	17	3	17	24	0	0	0	0
	TOTAL	115	87	115	185	0	0	0	0
B12	Guide								
	GR	-1	-142	1	142	0	0	0	0
	T1	-333	0	333	470	0	0	0	0
	P1	-2	0	2	2	0	0	0	0
	SUM	-335	-142	335	495	0	0	0	0
	RESP	39	9	39	56	0	0	0	0
	TOTAL	374	151	374	550	0	0	0	0
B14	Anchor								
	GR	2	-105	0	105	271	4	169	320
	T1	897	0	137	908	-1	1786	0	1786
	P1	4	0	1	4	0	8	0	8
	SUM	903	-106	138	920	270	1799	169	1827
	RESP	114	13	27	118	67	260	33	270
	TOTAL	1017	119	165	1037	337	2058	202	2095
C03	Anchor								
	GR	3	-15	1	16	-3	-1	1	3
	T1	-322	-985	-727	1266	128	96	-65	173
	P1	-2	-5	-3	6	1	0	0	1
	SUM	-321	-1005	-730	1283	126	96	-65	171
	RESP	11	91	88	127	21	7	6	22
	TOTAL	332	1096	818	1408	146	102	70	192

R E S T R A I N T R E A C T I O N S

Point name	Load combination	FORCES (lb) X	Y	Z	Result	MOMENTS (ft-lb) X	Y	Z	Result
D02	Anchor								
	GR	1	-8	2	8	-1	0	1	1
	T1	-8	315	-326	453	164	-6	-11	165
	P1	0	2	-2	2	1	0	0	1
	SUM	-7	309	-325	448	164	-6	-10	165
	RESP	4	34	18	38	8	1	3	9
	TOTAL	11	342	343	485	173	6	13	173
E02	Guide								
	GR	0	-145	0	145	0	0	0	0
	T1	-72	0	72	102	0	0	0	0
	P1	0	0	0	0	0	0	0	0
	SUM	-73	-145	73	178	0	0	0	0
	RESP	13	14	13	24	0	0	0	0
	TOTAL	86	159	86	200	0	0	0	0
E03	Guide								
	GR	0	-107	0	107	0	0	0	0
	T1	-41	0	41	57	0	0	0	0
	P1	0	0	0	0	0	0	0	0
	SUM	-41	-107	41	122	0	0	0	0
	RESP	9	6	9	14	0	0	0	0
	TOTAL	50	114	50	134	0	0	0	0
E05	Guide								
	GR	0	-137	0	137	0	0	0	0
	T1	-109	1	0	109	0	0	0	0
	P1	-1	0	0	1	0	0	0	0
	SUM	-109	-136	0	175	0	0	0	0
	RESP	66	11	0	67	0	0	0	0
	TOTAL	175	147	0	229	0	0	0	0
E06	Guide								
	GR	0	-107	0	107	0	0	0	0
	T1	8	-5	0	9	0	0	0	0
	P1	0	0	0	0	0	0	0	0
	SUM	8	-112	0	112	0	0	0	0
	RESP	16	5	0	17	0	0	0	0
	TOTAL	24	117	0	119	0	0	0	0

RESTRAINT REACTIONS

Point name	Load combination	FORCES (lb) X	Y	Z	Result	MOMENTS (ft-lb) X	Y	Z	Result
E07	Guide								
	GR	0	-124	0	124	0	0	0	0
	T1	-2	19	0	19	0	0	0	0
	P1	0	0	0	0	0	0	0	0
	SUM	-2	-105	0	105	0	0	0	0
	RESP	5	8	0	9	0	0	0	0
	TOTAL	7	113	0	113	0	0	0	0
E08	Guide								
	GR	1	-98	0	98	0	0	0	0
	T1	1	-110	0	110	0	0	0	0
	P1	0	-1	0	1	0	0	0	0
	SUM	2	-209	0	209	0	0	0	0
	RESP	4	80	0	81	0	0	0	0
	TOTAL	6	289	0	289	0	0	0	0
E10	Anchor								
	GR	-1	-52	0	52	-2	-2	2	4
	T1	0	95	-178	202	458	0	-1	458
	P1	0	0	-1	1	2	0	0	2
	SUM	-1	44	-178	184	457	-2	2	457
	RESP	5	74	217	229	622	4	18	622
	TOTAL	6	118	395	413	1079	5	20	1080

ASME B31.3c (1992) CODE COMPLIANCE

Point name	Load combination	(Moments in ft-lb) In-Pl. Moment	Out-Pl. Moment	Torsion Moment	S.I.F In	S.I.F Out	Eq. no.	(Stress in psi) Load type	Code Stress	Code Allow.
*** Segment A begin ***										
A00	Max P						(3a)	HOOP	926	16700
	GR + Max P	1	1		1.00	1.00	(18)	SUST	424	16700
	Cold to T1	187	91	88	1.00	1.00	(17)	DISP	4839	25050
	SRSS	13	9		1.00	1.00	(18)	OCC	511	22211
B00 -	Max P						(3a)	HOOP	926	16700
	GR + Max P	0	3		1.19	1.25	(18)	SUST	494	16700
	Cold to T1	90	398	88	1.19	1.25	(17)	DISP	11054	25050
	SRSS	9	30		1.19	1.25	(18)	OCC	1272	22211
B00 +	Max P						(3a)	HOOP	926	16700
	GR + Max P	0	2		1.19	1.25	(18)	SUST	448	16700
	Cold to T1	103	175	40	1.19	1.25	(17)	DISP	5440	25050
	SRSS	7	16		1.19	1.25	(18)	OCC	697	22211
A01 N-	Max P						(3a)	HOOP	926	16700
	GR + Max P	0	0		1.00	1.00	(18)	SUST	391	16700
	Cold to T1	31	27	40	1.00	1.00	(17)	DISP	1225	25050
	SRSS	3	2		1.00	1.00	(18)	OCC	107	22211
A01 N+	Max P						(3a)	HOOP	926	16700
	GR + Max P	0	0		2.27	1.89	(18)	SUST	406	16700
	Cold to T1	41	3	40	2.27	1.89	(17)	DISP	2173	25050
	SRSS	3	0		2.27	1.89	(18)	OCC	243	22211
A01 M	Max P						(3a)	HOOP	926	16700
	GR + Max P	0	0		2.27	1.89	(18)	SUST	382	16700
	Cold to T1	10	10	34	2.27	1.89	(17)	DISP	961	25050
	SRSS	0	1		2.27	1.89	(18)	OCC	78	22211
A01 F-	Max P						(3a)	HOOP	926	16700
	GR + Max P	0	0		2.27	1.89	(18)	SUST	401	16700
	Cold to T1	12	11	25	2.27	1.89	(17)	DISP	915	25050
	SRSS	2	1		2.27	1.89	(18)	OCC	159	22211
A01 F+	Max P						(3a)	HOOP	926	16700
	GR + Max P	0	0		1.00	1.00	(18)	SUST	390	16700
	Cold to T1	12	11	25	1.00	1.00	(17)	DISP	647	25050
	SRSS	2	1		1.00	1.00	(18)	OCC	75	22211

ASME B31.3c (1992) CODE COMPLIANCE

Point name	Load combination	(Moments in ft-lb) In-Pl. Moment	Out-Pl. Moment	Torsion Moment	S.I.F In	Out	(Stress in psi) Eq. no.	Load type	Code Stress	Code Allow.
A02 N-	Max P						(3a)	HOOP	926	16700
	GR + Max P	0	0		1.00	1.00	(18)	SUST	390	16700
	Cold to T1	12	11	25	1.00	1.00	(17)	DISP	647	25050
	SRSS	2	1		1.00	1.00	(18)	OCC	75	22211
A02 N+	Max P						(3a)	HOOP	926	16700
	GR + Max P	0	0		2.27	1.89	(18)	SUST	401	16700
	Cold to T1	12	11	25	2.27	1.89	(17)	DISP	915	25050
	SRSS	2	1		2.27	1.89	(18)	OCC	159	22211
A02 M	Max P						(3a)	HOOP	926	16700
	GR + Max P	0	0		2.27	1.89	(18)	SUST	399	16700
	Cold to T1	11	6	19	2.27	1.89	(17)	DISP	714	25050
	SRSS	2	1		2.27	1.89	(18)	OCC	139	22211
A02 F-	Max P						(3a)	HOOP	926	16700
	GR + Max P	0	0		2.27	1.89	(18)	SUST	382	16700
	Cold to T1	11	3	18	2.27	1.89	(17)	DISP	682	25050
	SRSS	0	0		2.27	1.89	(18)	OCC	33	22211
A02 F+	Max P						(3a)	HOOP	926	16700
	GR + Max P	0	0		1.00	1.00	(18)	SUST	381	16700
	Cold to T1	10	6	18	1.00	1.00	(17)	DISP	453	25050
	SRSS	0	0		1.00	1.00	(18)	OCC	15	22211
D00 -	Max P						(3a)	HOOP	926	16700
	GR + Max P	0	0		1.19	1.25	(18)	SUST	399	16700
	Cold to T1	69	14	18	1.19	1.25	(17)	DISP	1846	25050
	SRSS	5	2		1.19	1.25	(18)	OCC	215	22211
D00 +	Max P						(3a)	HOOP	926	16700
	GR + Max P	0	0		1.19	1.25	(18)	SUST	394	16700
	Cold to T1	25	9	14	1.19	1.25	(17)	DISP	742	25050
	SRSS	1	1		1.19	1.25	(18)	OCC	60	22211
A03	Max P						(3a)	HOOP	926	16700
	GR + Max P	1	1		1.00	1.00	(18)	SUST	419	16700
	Cold to T1	4	32	14	1.00	1.00	(17)	DISP	758	25050
	SRSS	6	4		1.00	1.00	(18)	OCC	227	22211

*** Segment A end ***

*** Segment B begin ***

ASME B31.3c (1992) CODE COMPLIANCE

Point name	Load combination	(Moments in ft-lb) In-Pl. Moment	Out-Pl. Moment	Torsion Moment	S.I.F In	Out	(Stress in psi) Eq. no.	Load type	Code Stress	Code Allow.
B00	Max P						(3a)	HOOP	926	16700
	GR + Max P	5	0		1.19	1.25	(18)	SUST	553	16700
	Cold to T1	573	128	194	1.19	1.25	(17)	DISP	14589	25050
	SRSS	46	15		1.19	1.25	(18)	OCC	1804	22211
B01 N-	Max P						(3a)	HOOP	926	16700
	GR + Max P	1	0		1.00	1.00	(18)	SUST	396	16700
	Cold to T1	305	149	194	1.00	1.00	(17)	DISP	8354	25050
	SRSS	27	13		1.00	1.00	(18)	OCC	970	22211
B01 N+	Max P						(3a)	HOOP	926	16700
	GR + Max P	1	0		2.27	1.89	(18)	SUST	420	16700
	Cold to T1	305	149	194	2.27	1.89	(17)	DISP	16498	25050
	SRSS	27	13		2.27	1.89	(18)	OCC	2139	22211
B01 M	Max P						(3a)	HOOP	926	16700
	GR + Max P	2	0		2.27	1.89	(18)	SUST	489	16700
	Cold to T1	173	20	247	2.27	1.89	(17)	DISP	9964	25050
	SRSS	18	4		2.27	1.89	(18)	OCC	1319	22211
B01 F-	Max P						(3a)	HOOP	926	16700
	GR + Max P	2	0		2.27	1.89	(18)	SUST	535	16700
	Cold to T1	159	177	165	2.27	1.89	(17)	DISP	11130	25050
	SRSS	16	18		2.27	1.89	(18)	OCC	1606	22211
B01 F+	Max P						(3a)	HOOP	926	16700
	GR + Max P	1	2		1.00	1.00	(18)	SUST	443	16700
	Cold to T1	238	12	165	1.00	1.00	(17)	DISP	6208	25050
	SRSS	24	3		1.00	1.00	(18)	OCC	774	22211
C00 -	Max P						(3a)	HOOP	926	16700
	GR + Max P	2	0		1.19	1.25	(18)	SUST	439	16700
	Cold to T1	247	156	165	1.19	1.25	(17)	DISP	8329	25050
	SRSS	22	19		1.19	1.25	(18)	OCC	1145	22211
C00 +	Max P						(3a)	HOOP	926	16700
	GR + Max P	3	5		1.19	1.25	(18)	SUST	597	16700
	Cold to T1	312	521	1	1.19	1.25	(17)	DISP	16049	25050
	SRSS	45	28		1.19	1.25	(18)	OCC	2069	22211
B02	Max P						(3a)	HOOP	926	16700
	GR + Max P	4	1		1.00	1.00	(18)	SUST	525	16700
	Cold to T1	483	139	1	1.00	1.00	(17)	DISP	10765	25050
	SRSS	42	12		1.00	1.00	(18)	OCC	1425	22211

ASME B31.3c (1992) CODE COMPLIANCE

Point name	Load combination	(Moments in ft-lb) In-Pl. Moment	Out-Pl. Moment	Torsion Moment	S.I.F In	S.I.F Out	(Stress in psi) Eq. no.	Load type	Code Stress	Code Allow.
B03	Max P						(3a)	HOOP	790	16700
	GR + Max P	3	1		1.00	1.00	(18)	SUST	365	16700
	Cold to T1	318	124	1	1.00	1.00	(17)	DISP	2374	25050
	SRSS	28	11		1.00	1.00	(18)	OCC	274	22211
B04	Max P						(3a)	HOOP	790	16700
	GR + Max P	2	1		1.00	1.00	(18)	SUST	358	16700
	Cold to T1	232	117	1	1.00	1.00	(17)	DISP	1810	25050
	SRSS	21	10		1.00	1.00	(18)	OCC	211	22211
B05 N-	Max P						(3a)	HOOP	790	16700
	GR + Max P	7	1		1.00	1.00	(18)	SUST	399	16700
	Cold to T1	774	28	1	1.00	1.00	(17)	DISP	5393	25050
	SRSS	64	3		1.00	1.00	(18)	OCC	587	22211
B05 N+	Max P						(3a)	HOOP	790	16700
	GR + Max P	7	1		1.78	1.48	(18)	SUST	449	16700
	Cold to T1	774	28	1	1.78	1.48	(17)	DISP	9581	25050
	SRSS	64	3		1.78	1.48	(18)	OCC	1043	22211
B05 M	Max P						(3a)	HOOP	790	16700
	GR + Max P	8	1		1.78	1.48	(18)	SUST	468	16700
	Cold to T1	874	7	15	1.78	1.48	(17)	DISP	10812	25050
	SRSS	72	3		1.78	1.48	(18)	OCC	1176	22211
B05 F-	Max P						(3a)	HOOP	790	16700
	GR + Max P	8	0		1.78	1.48	(18)	SUST	466	16700
	Cold to T1	849	17	11	1.78	1.48	(17)	DISP	10501	25050
	SRSS	71	3		1.78	1.48	(18)	OCC	1147	22211
B05 F+	Max P						(3a)	HOOP	790	16700
	GR + Max P	8	0		1.00	1.00	(18)	SUST	409	16700
	Cold to T1	849	17	11	1.00	1.00	(17)	DISP	5911	25050
	SRSS	71	3		1.00	1.00	(18)	OCC	646	22211
B06	Max P						(3a)	HOOP	790	16700
	GR + Max P	77	0		1.00	1.00	(18)	SUST	1039	16700
	Cold to T1	208	172	11	1.00	1.00	(17)	DISP	1878	25050
	SRSS	11	18		1.00	1.00	(18)	OCC	189	22211
B07	Max P						(3a)	HOOP	790	16700
	GR + Max P	102	0		1.00	1.00	(18)	SUST	1269	16700
	Cold to T1	56	34	11	1.00	1.00	(17)	DISP	462	25050
	SRSS	3	4		1.00	1.00	(18)	OCC	44	22211

ASME B31.3c (1992) CODE COMPLIANCE

Point name	Load combination	(Moments in ft-lb) In-Pl. Moment	Out-Pl. Moment	Torsion Moment	S.I.F In	S.I.F Out	(Stress in psi) Eq. no.	Load type	Code Stress	Code Allow.
B08	Max P						(3a)	HOOP	790	16700
	GR + Max P	103	0		1.00	1.00	(18)	SUST	1273	16700
	Cold to T1	17	36	11	1.00	1.00	(17)	DISP	289	25050
	SRSS	2	5		1.00	1.00	(18)	OCC	46	22211
B09	Max P						(3a)	HOOP	790	16700
	GR + Max P	76	1		1.00	1.00	(18)	SUST	1027	16700
	Cold to T1	13	179	11	1.00	1.00	(17)	DISP	1251	25050
	SRSS	5	21		1.00	1.00	(18)	OCC	200	22211
B10 N-	Max P						(3a)	HOOP	790	16700
	GR + Max P	23	2		1.00	1.00	(18)	SUST	550	16700
	Cold to T1	9	263	11	1.00	1.00	(17)	DISP	1835	25050
	SRSS	3	27		1.00	1.00	(18)	OCC	250	22211
B10 N+	Max P						(3a)	HOOP	790	16700
	GR + Max P	2	23		1.00	1.00	(18)	SUST	550	16700
	Cold to T1	263	9	11	1.00	1.00	(17)	DISP	1835	25050
	SRSS	27	3		1.00	1.00	(18)	OCC	250	22211
B10 M	Max P						(3a)	HOOP	790	16700
	GR + Max P	4	7		1.00	1.00	(18)	SUST	407	16700
	Cold to T1	437	10	7	1.00	1.00	(17)	DISP	3046	25050
	SRSS	31	1		1.00	1.00	(18)	OCC	284	22211
B10 F-	Max P						(3a)	HOOP	790	16700
	GR + Max P	3	6		1.00	1.00	(18)	SUST	392	16700
	Cold to T1	356	9	4	1.00	1.00	(17)	DISP	2478	25050
	SRSS	19	2		1.00	1.00	(18)	OCC	177	22211
B10 F+	Max P						(3a)	HOOP	790	16700
	GR + Max P	6	3		1.00	1.00	(18)	SUST	392	16700
	Cold to T1	9	356	4	1.00	1.00	(17)	DISP	2478	25050
	SRSS	2	19		1.00	1.00	(18)	OCC	177	22211
B11	Max P						(3a)	HOOP	790	16700
	GR + Max P	52	1		1.00	1.00	(18)	SUST	812	16700
	Cold to T1	4	33	4	1.00	1.00	(17)	DISP	231	25050
	SRSS	3	24		1.00	1.00	(18)	OCC	222	22211
B12	Max P						(3a)	HOOP	790	16700
	GR + Max P	165	3		1.00	1.00	(18)	SUST	1841	16700
	Cold to T1	1	428	4	1.00	1.00	(17)	DISP	2981	25050
	SRSS	19	32		1.00	1.00	(18)	OCC	341	22211

ASME B31.3c (1992) CODE COMPLIANCE

Point name	Load combination	(Moments in ft-lb) In-Pl. Moment	Out-Pl. Moment	Torsion Moment	S.I.F In	Out	(Stress in psi) Eq. no.	Load type	Code Stress	Code Allow.
B13 N-	Max P						(3a)	HOOP	790	16700
	GR + Max P	60	3		1.00	1.00	(18)	SUST	887	16700
	Cold to T1	0	298	4	1.00	1.00	(17)	DISP	2072	25050
	SRSS	9	40		1.00	1.00	(18)	OCC	376	22211
B13 N+	Max P						(3a)	HOOP	790	16700
	GR + Max P	3	60		1.00	1.00	(18)	SUST	887	16700
	Cold to T1	298	0	4	1.00	1.00	(17)	DISP	2072	25050
	SRSS	40	9		1.00	1.00	(18)	OCC	376	22211
B13 M	Max P						(3a)	HOOP	790	16700
	GR + Max P	5	1		1.00	1.00	(18)	SUST	384	16700
	Cold to T1	671	1	3	1.00	1.00	(17)	DISP	4669	25050
	SRSS	76	2		1.00	1.00	(18)	OCC	693	22211
B13 F-	Max P						(3a)	HOOP	790	16700
	GR + Max P	5	43		1.00	1.00	(18)	SUST	728	16700
	Cold to T1	744	2	3	1.00	1.00	(17)	DISP	5175	25050
	SRSS	82	5		1.00	1.00	(18)	OCC	753	22211
B13 F+	Max P						(3a)	HOOP	790	16700
	GR + Max P	43	5		1.00	1.00	(18)	SUST	728	16700
	Cold to T1	2	744	3	1.00	1.00	(17)	DISP	5175	25050
	SRSS	5	82		1.00	1.00	(18)	OCC	753	22211
E00 -	Max P						(3a)	HOOP	790	16700
	GR + Max P	2	50		1.22	1.30	(18)	SUST	901	16700
	Cold to T1	469	1	3	1.22	1.30	(17)	DISP	3757	25050
	SRSS	77	15		1.22	1.30	(18)	OCC	845	22211
E00 +	Max P						(3a)	HOOP	790	16700
	GR + Max P	1	79		1.22	1.30	(18)	SUST	1275	16700
	Cold to T1	96	2	1	1.22	1.30	(17)	DISP	813	25050
	SRSS	33	35		1.22	1.30	(18)	OCC	553	22211
B14	Max P						(3a)	HOOP	790	16700
	GR + Max P	311	12		1.00	1.00	(18)	SUST	3186	16700
	Cold to T1	1	1786	1	1.00	1.00	(17)	DISP	12433	25050
	SRSS	65	207		1.00	1.00	(18)	OCC	1988	22211

*** Segment B end ***

*** Segment C begin ***

ASME B31.3c (1992) CODE COMPLIANCE

Point name	Load combination	(Moments in ft-lb) In-Pl. Moment	Out-Pl. Moment	Torsion Moment	S.I.F In	Out	(Stress in psi) Eq. no.	Load type	Code Stress	Code Allow.
C00	Max P						(3a)	HOOP	926	16700
	GR + Max P	5	0		1.19	1.25	(18)	SUST	565	16700
	Cold to T1	365	166	65	1.19	1.25	(17)	DISP	9759	25050
	SRSS	25	10		1.19	1.25	(18)	OCC	995	22211
C01 N-	Max P						(3a)	HOOP	926	16700
	GR + Max P	2	0		1.00	1.00	(18)	SUST	432	16700
	Cold to T1	160	12	65	1.00	1.00	(17)	DISP	3703	25050
	SRSS	10	1		1.00	1.00	(18)	OCC	332	22211
C01 N+	Max P						(3a)	HOOP	926	16700
	GR + Max P	2	0		2.27	1.89	(18)	SUST	497	16700
	Cold to T1	160	12	65	2.27	1.89	(17)	DISP	7905	25050
	SRSS	10	1		2.27	1.89	(18)	OCC	752	22211
C01 M	Max P						(3a)	HOOP	926	16700
	GR + Max P	0	1		2.27	1.89	(18)	SUST	435	16700
	Cold to T1	58	125	18	2.27	1.89	(17)	DISP	5809	25050
	SRSS	4	12		2.27	1.89	(18)	OCC	823	22211
C01 F-	Max P						(3a)	HOOP	926	16700
	GR + Max P	1	1		2.27	1.89	(18)	SUST	479	16700
	Cold to T1	43	189	112	2.27	1.89	(17)	DISP	8282	25050
	SRSS	6	16		2.27	1.89	(18)	OCC	1098	22211
C01 F+	Max P						(3a)	HOOP	926	16700
	GR + Max P	0	1		1.00	1.00	(18)	SUST	432	16700
	Cold to T1	164	103	112	1.00	1.00	(17)	DISP	4791	25050
	SRSS	16	8		1.00	1.00	(18)	OCC	567	22211
C02 N-	Max P						(3a)	HOOP	926	16700
	GR + Max P	0	1		1.00	1.00	(18)	SUST	432	16700
	Cold to T1	166	103	112	1.00	1.00	(17)	DISP	4821	25050
	SRSS	16	8		1.00	1.00	(18)	OCC	571	22211
C02 N+	Max P						(3a)	HOOP	926	16700
	GR + Max P	1	1		2.27	1.89	(18)	SUST	480	16700
	Cold to T1	195	7	112	2.27	1.89	(17)	DISP	9786	25050
	SRSS	18	1		2.27	1.89	(18)	OCC	1295	22211
C02 M	Max P						(3a)	HOOP	926	16700
	GR + Max P	0	0		2.27	1.89	(18)	SUST	420	16700
	Cold to T1	240	73	79	2.27	1.89	(17)	DISP	12131	25050
	SRSS	22	3		2.27	1.89	(18)	OCC	1599	22211

ASME B31.3c (1992) CODE COMPLIANCE

Point name	Load combination	(Moments in ft-lb) In-Pl. Moment	Out-Pl. Moment	Torsion Moment	S.I.F In	S.I.F Out	(Stress in psi) Eq. no.	Load type	Code Stress	Code Allow.
C02 F-	Max P						(3a)	HOOP	926	16700
	GR + Max P	2	0		2.27	1.89	(18)	SUST	535	16700
	Cold to T1	163	98	9	2.27	1.89	(17)	DISP	8873	25050
	SRSS	17	6		2.27	1.89	(18)	OCC	1290	22211
C02 F+	Max P						(3a)	HOOP	926	16700
	GR + Max P	2	0		1.00	1.00	(18)	SUST	451	16700
	Cold to T1	163	98	8	1.00	1.00	(17)	DISP	4081	25050
	SRSS	17	6		1.00	1.00	(18)	OCC	578	22211
C03	Max P						(3a)	HOOP	926	16700
	GR + Max P	2	0		1.00	1.00	(18)	SUST	464	16700
	Cold to T1	143	96	8	1.00	1.00	(17)	DISP	3702	25050
	SRSS	16	5		1.00	1.00	(18)	OCC	532	22211
*** Segment C end ***										
*** Segment D begin ***										
D00	Max P						(3a)	HOOP	926	16700
	GR + Max P	1	0		1.19	1.25	(18)	SUST	397	16700
	Cold to T1	45	3	5	1.19	1.25	(17)	DISP	1074	25050
	SRSS	6	1		1.19	1.25	(18)	OCC	229	22211
D01 N-	Max P						(3a)	HOOP	926	16700
	GR + Max P	0	0		1.00	1.00	(18)	SUST	386	16700
	Cold to T1	8	5	5	1.00	1.00	(17)	DISP	227	25050
	SRSS	2	0		1.00	1.00	(18)	OCC	53	22211
D01 N+	Max P						(3a)	HOOP	926	16700
	GR + Max P	0	0		2.27	1.89	(18)	SUST	398	16700
	Cold to T1	8	5	5	2.27	1.89	(17)	DISP	442	25050
	SRSS	2	0		2.27	1.89	(18)	OCC	121	22211
D01 M	Max P						(3a)	HOOP	926	16700
	GR + Max P	0	0		2.27	1.89	(18)	SUST	383	16700
	Cold to T1	29	8	0	2.27	1.89	(17)	DISP	1449	25050
	SRSS	1	1		2.27	1.89	(18)	OCC	75	22211
D01 F-	Max P						(3a)	HOOP	926	16700
	GR + Max P	0	0		2.27	1.89	(18)	SUST	389	16700
	Cold to T1	6	7	6	2.27	1.89	(17)	DISP	418	25050
	SRSS	1	1		2.27	1.89	(18)	OCC	71	22211

ASME B31.3c (1992) CODE COMPLIANCE

Point name	Load combination	(Moments in ft-lb) In-Pl. Moment	Out-Pl. Moment	Torsion Moment	S.I.F In	S.I.F Out	(Stress in psi) Eq. no.	Load type	Code Stress	Code Allow.
D01 F+	Max P						(3a)	HOOP	926	16700
	GR + Max P	0	0		1.00	1.00	(18)	SUST	383	16700
	Cold to T1	6	7	6	1.00	1.00	(17)	DISP	230	25050
	SRSS	1	1		1.00	1.00	(18)	OCC	36	22211
D02	Max P						(3a)	HOOP	926	16700
	GR + Max P	0	1		1.00	1.00	(18)	SUST	395	16700
	Cold to T1	164	11	6	1.00	1.00	(17)	DISP	3528	25050
	SRSS	7	3		1.00	1.00	(18)	OCC	235	22211
*** Segment D end ***										
*** Segment E begin ***										
E00	Max P						(3a)	HOOP	790	16700
	GR + Max P	0	123		1.22	1.30	(18)	SUST	1789	16700
	Cold to T1	373	1	0	1.22	1.30	(17)	DISP	3175	25050
	SRSS	106	48		1.22	1.30	(18)	OCC	1317	22211
E01 N-	Max P						(3a)	HOOP	790	16700
	GR + Max P	4	3		1.00	1.00	(18)	SUST	377	16700
	Cold to T1	0	491	0	1.00	1.00	(17)	DISP	3419	25050
	SRSS	3	68		1.00	1.00	(18)	OCC	619	22211
E01 N+	Max P						(3a)	HOOP	790	16700
	GR + Max P	3	4		1.78	1.48	(18)	SUST	401	16700
	Cold to T1	491	0	0	1.78	1.48	(17)	DISP	6075	25050
	SRSS	68	3		1.78	1.48	(18)	OCC	1099	22211
E01 M	Max P						(3a)	HOOP	790	16700
	GR + Max P	3	35		1.78	1.48	(18)	SUST	805	16700
	Cold to T1	532	0	0	1.78	1.48	(17)	DISP	6580	25050
	SRSS	74	12		1.78	1.48	(18)	OCC	1215	22211
E01 F-	Max P						(3a)	HOOP	790	16700
	GR + Max P	3	44		1.78	1.48	(18)	SUST	936	16700
	Cold to T1	526	0	0	1.78	1.48	(17)	DISP	6499	25050
	SRSS	74	15		1.78	1.48	(18)	OCC	1214	22211
E01 F+	Max P						(3a)	HOOP	790	16700
	GR + Max P	44	3		1.00	1.00	(18)	SUST	741	16700
	Cold to T1	0	526	0	1.00	1.00	(17)	DISP	3658	25050
	SRSS	15	74		1.00	1.00	(18)	OCC	687	22211

ICF-4PRINT

ASME B31.3c (1992) CODE COMPLIANCE

Point name	Load combination	(Moments in ft-lb) In-Pl. Moment	Out-Pl. Moment	Torsion Moment	S.I.F In	S.I.F Out	(Stress in psi) Eq. no.	Load type	Code Stress	Code Allow.
E02	Max P						(3a)	HOOP	790	16700
	GR + Max P	199	1		1.00	1.00	(18)	SUST	2157	16700
	Cold to T1	1	128	0	1.00	1.00	(17)	DISP	892	25050
	SRSS	37	14		1.00	1.00	(18)	OCC	362	22211
E03	Max P						(3a)	HOOP	790	16700
	GR + Max P	90	1		1.00	1.00	(18)	SUST	1159	16700
	Cold to T1	1	171	0	1.00	1.00	(17)	DISP	1190	25050
	SRSS	8	20		1.00	1.00	(18)	OCC	197	22211
E04 N-	Max P						(3a)	HOOP	790	16700
	GR + Max P	11	1		1.00	1.00	(18)	SUST	433	16700
	Cold to T1	1	250	0	1.00	1.00	(17)	DISP	1741	25050
	SRSS	5	46		1.00	1.00	(18)	OCC	424	22211
E04 N+	Max P						(3a)	HOOP	790	16700
	GR + Max P	1	11		1.78	1.48	(18)	SUST	480	16700
	Cold to T1	250	1	0	1.78	1.48	(17)	DISP	3094	25050
	SRSS	46	5		1.78	1.48	(18)	OCC	752	22211
E04 M	Max P						(3a)	HOOP	790	16700
	GR + Max P	1	3		1.78	1.48	(18)	SUST	384	16700
	Cold to T1	252	1	0	1.78	1.48	(17)	DISP	3118	25050
	SRSS	45	5		1.78	1.48	(18)	OCC	738	22211
E04 F-	Max P						(3a)	HOOP	790	16700
	GR + Max P	1	5		1.78	1.48	(18)	SUST	403	16700
	Cold to T1	243	1	0	1.78	1.48	(17)	DISP	2999	25050
	SRSS	41	5		1.78	1.48	(18)	OCC	677	22211
E04 F+	Max P						(3a)	HOOP	790	16700
	GR + Max P	5	1		1.00	1.00	(18)	SUST	381	16700
	Cold to T1	1	243	0	1.00	1.00	(17)	DISP	1688	25050
	SRSS	5	41		1.00	1.00	(18)	OCC	382	22211
E05	Max P						(3a)	HOOP	790	16700
	GR + Max P	159	0		1.00	1.00	(18)	SUST	1786	16700
	Cold to T1	1	49	0	1.00	1.00	(17)	DISP	342	25050
	SRSS	21	73		1.00	1.00	(18)	OCC	697	22211
E06	Max P						(3a)	HOOP	790	16700
	GR + Max P	80	0		1.00	1.00	(18)	SUST	1071	16700
	Cold to T1	8	13	0	1.00	1.00	(17)	DISP	108	25050
	SRSS	6	20		1.00	1.00	(18)	OCC	187	22211

ASME B31.3c (1992) CODE COMPLIANCE

Point name	Load combination	(Moments in ft-lb) In-Pl. Moment	Out-Pl. Moment	Torsion Moment	S.I.F In	S.I.F Out	(Stress in psi) Eq. no.	Load type	Code Stress	Code Allow.
E07	Max P						(3a)	HOOP	790	16700
	GR + Max P	108	1		1.00	1.00	(18)	SUST	1328	16700
	Cold to T1	32	4	0	1.00	1.00	(17)	DISP	225	25050
	SRSS	10	5		1.00	1.00	(18)	OCC	101	22211
E08	Max P						(3a)	HOOP	790	16700
	GR + Max P	74	2		1.00	1.00	(18)	SUST	1011	16700
	Cold to T1	121	1	0	1.00	1.00	(17)	DISP	841	25050
	SRSS	36	6		1.00	1.00	(18)	OCC	333	22211
E09 N-	Max P						(3a)	HOOP	790	16700
	GR + Max P	4	1		1.00	1.00	(18)	SUST	377	16700
	Cold to T1	232	0	0	1.00	1.00	(17)	DISP	1613	25050
	SRSS	187	3		1.00	1.00	(18)	OCC	1713	22211
E09 N+	Max P						(3a)	HOOP	790	16700
	GR + Max P	4	1		1.78	1.48	(18)	SUST	408	16700
	Cold to T1	232	0	0	1.78	1.48	(17)	DISP	2866	25050
	SRSS	187	3		1.78	1.48	(18)	OCC	3043	22211
E09 M	Max P						(3a)	HOOP	790	16700
	GR + Max P	4	3		1.78	1.48	(18)	SUST	409	16700
	Cold to T1	237	0	0	1.78	1.48	(17)	DISP	2936	25050
	SRSS	185	3		1.78	1.48	(18)	OCC	3001	22211
E09 F-	Max P						(3a)	HOOP	790	16700
	GR + Max P	3	6		1.78	1.48	(18)	SUST	430	16700
	Cold to T1	201	0	0	1.78	1.48	(17)	DISP	2483	25050
	SRSS	146	2		1.78	1.48	(18)	OCC	2381	22211
E09 F+	Max P						(3a)	HOOP	790	16700
	GR + Max P	3	6		1.00	1.00	(18)	SUST	397	16700
	Cold to T1	201	0	0	1.00	1.00	(17)	DISP	1397	25050
	SRSS	146	2		1.00	1.00	(18)	OCC	1340	22211
E10	Max P						(3a)	HOOP	790	16700
	GR + Max P	0	2		1.00	1.00	(18)	SUST	359	16700
	Cold to T1	458	1	0	1.00	1.00	(17)	DISP	3186	25050
	SRSS	501	15		1.00	1.00	(18)	OCC	4588	22211

*** Segment E end ***

ICF-4PRINT

SYSTEM SUMMARY

Maximum displacements (in)

Maximum X :	0.220	Point : E02	Load Comb.: TOTAL
Maximum Y :	0.096	Point : E01 M	Load Comb.: TOTAL
Maximum Z :	0.288	Point : E01 F	Load Comb.: TOTAL
Max. total:	0.367	Point : E01 F	Load Comb.: TOTAL

Maximum rotations (deg)

Maximum X :	0.361	Point : B04	Load Comb.: TOTAL
Maximum Y :	0.244	Point : E00	Load Comb.: TOTAL
Maximum Z :	0.143	Point : C01 M	Load Comb.: TOTAL
Max. total:	0.383	Point : B04	Load Comb.: TOTAL

Maximum restraint forces(lb)

Maximum X :	1017	Point : B14	Load Comb.: TOTAL
Maximum Y :	1480	Point : A00	Load Comb.: TOTAL
Maximum Z :	818	Point : C03	Load Comb.: TOTAL
Max. total:	1642	Point : A00	Load Comb.: TOTAL

Maximum restraint moments(ft-lb)

Maximum X :	1079	Point : E10	Load Comb.: TOTAL
Maximum Y :	2058	Point : B14	Load Comb.: TOTAL
Maximum Z :	202	Point : B14	Load Comb.: TOTAL
Max. total:	2095	Point : B14	Load Comb.: TOTAL

SYSTEM SUMMARY

Maximum sustained stress

Point : B14
Stress psi : 3186
Allowable psi : 16700
Ratio : 0.19
Load combination : GR + Max P

Maximum displacement stress

Point : B01 N
Stress psi : 16498
Allowable psi : 25050
Ratio : 0.66
Load combination : Cold to T1

Maximum occasional stress

Point : E10
Stress psi : 4588
Allowable psi : 22211
Ratio : 0.21
Load combination : SRSS

Maximum hoop stress

Point : A00
Stress psi : 926
Allowable psi : 16700
Ratio : 0.06
Load combination : Max P

Maximum sustained stress ratio

Point : B14
Stress psi : 3186
Allowable psi : 16700
Ratio : 0.19
Load combination : GR + Max P

Maximum displacement stress ratio

Point : B01 N
Stress psi : 16498
Allowable psi : 25050
Ratio : 0.66
Load combination : Cold to T1

SYSTEM SUMMARY

Maximum occasional stress ratio

Point	: E10
Stress psi	: 4588
Allowable psi	: 22211
Ratio	: 0.21
Load combination	: SRSS

Maximum hoop stress ratio

Point	: A00
Stress psi	: 926
Allowable psi	: 16700
Ratio	: 0.06
Load combination	: Max P

* * * The system satisfies ASME B31.3 code requirements * * *
* * * for the selected options * * *

Max occasional stress

4588 psi + 3186 psi = 7774 psi < 22211 psi o.k.

Ratio = 0.35

Rev. 1
By: K. Hapase 12/1/97
Chk: M. Ahmed 3.23.98

W320-27-029

AY Farm Jumper Stress Analysis

ICF KAISER HANFORD COMPANY	CALCULATION IDENTIFICATION AND INDEX	Page i of iii Date 09 /01 /95

This sheet shows the status and description of the attached Design Analysis sheets.

Discipline 27,Piping and Vessels WO/Job No. ER4319 Calculation No. W320-27-029

Project No. & Name Project W-320 Waste Retrieval for Tank 241-C-106

Calculation Item AY Farm Jumper Stress Analysis

These calculations apply to:

Dwg. No. ECN NO: W-320-380 Rev. No.

Dwg. No. Rev. No.

Other (Study, CDR) Rev. No.

The status of these calculations is:

- ☐ Preliminary Calculations
- ☒ Final Calculations
- ☐ Check Calculations (On Calculation Dated)
- ☐ Void Calculation (Reason Voided)

Incorporated in Final Drawings? ☒ Yes ☐ No

This calculation verified by independent "check" calculation? ☐ Yes ☒ No

Original and Revised Calculation Approvals:

	Rev. 0 Signature / Date	Rev. 1 Signature / Date	Rev. 2 Signature / Date
Originator	M.M. AHMED 9-1-95	M.M. Ahmed 7-12-96	M.M. Ahmed 3-12-97
Checked by	M.K. Pal 9/11/95	D.L. Stone 7-15-96	D.L. Stone 3-12-97
Approved by	C.D. Jones 9/11/95	C.D. Jones 7-16-96	D.L. EVANS 3-12-97
Checked Against Approved Vendor Data			

INDEX

Design Analysis Page No.	Description
i - ii	Calculation Identification and Index
iii	Calculation Cross Index
1	Objective, Design Criteria ,Design Inputs
2 - 4	Design Methodology
5	Assumptions
5 -6	References
6	Calculations and Conclusions
7	ISB Jumper Connectors qualification
8	Pit wall Anchor loads
9 - 10	JUMPER PIPING 3D ISOMETRIC

INDX-AY.XLS

FLUOR DANIEL NORTHWEST INC.	CALCULATION IDENTIFICATION AND INDEX	Page ia of iii Date 11/26/97

This sheet shows the status and description of the attached Design Analysis sheets.

Discipline: (27) Piping and Vessels WO/Job No.: ER4319 Calculation No.: W320-27-029

Project No. & Name: Project W-320 Waste Retrieval for Tank 241-C-106

Calculation Item: AY Farm Jumper Stress Analysis

These calculations apply to:

Dwg. No.: See Calculation Cross Index Rev. No.

Dwg. No.: Rev. No.

Other (Study, CDR): Rev. No.

The status of these calculations is:

[] Preliminary Calculations

[X] Final Calculations

[] Check Calculations (On Calculation Dated)

[] Void Calculation (Reason Voided)

Incorporated in Final Drawings? [X] Yes [] No

This calculation verified by independent "check" calculations? [] Yes [X] No

Original and Revised Calculation Approvals:

	Rev. 3 Signature/Date	Rev. 4 Signature/Date	Rev. 5 Signature/Date
Originator	Kelly K. Hayes 11/26/97		
Checked by	M. Ahmed 3.18.98		
Approved by	D.L. Evans 4/9/98		
Checked Against Approved Vendor Data	M. Ahmed 4.10.98		

INDEX

Design Analysis Page No.	Description
I - ii	Calculation Identification and Index
iii	Calculation Cross Index
1	Objective, Design Criteria, Design Inputs
2 - 4	Design Methodology
5	Assumptions
5 - 6	References
6	Calculations and Conclusions
7	ISB Jumper Connectors qualification
8	Pit Wall Anchor Loads
9 - 10	JUMPER PIPING 3D ISOMETRIC

ICF KAISER HANFORD COMPANY	CALCULATION IDENTIFICATION AND INDEX	Page ii of iii Date 09 /01/95

Discipline 27,Piping and Vessels WO/Job No._ER4319__ Calculation No. W320-27-029

	Rev. 0 Signature / Date	Rev. 1 Signature / Date	Rev. 2 Signature / Date
Originator	M. M. AHMED 9-1-95	M. M. Ahmed 7-12-96	M. Ahmed M.M. Ahmed 3-12-97
Checked by	M.K. Pal 9/11/95	D. L. Stone 7-15-96	D.L. Stone 3-12-97

INDEX

Design Analysis Page No.	Description
Appdx A	AutoPipe File no: AY02A1R2 For Static Analyis and AY02A2R2 for Dynamic Analysis for Pump Pit jumper
Appdx B	AutoPipe File no:AY02E-R2 for Static and Dynamic analysis for Sluice Pit jumper
Appdx C	Reference Documentation

Rev-1 Summary of Changes:

Revised:	Pages 1 thru 7 and Appendices A , B & C
Replaced:	Page 8
Deleted	Appendix-D

Rev-2 Summary of Changes

Revised	Pages 1 thru 5
Replaced	Pages 6 thru 8
Added	Pages 9 & 10

INDX-AY.XLS

FLUOR DANIEL NORTHWEST INC.	CALCULATION IDENTIFICATION AND INDEX Continuation Sheet	Page iia of iii Date 11/26/97

Discipline (27) Piping and Vessels WO/Job No. ER4319 Calculation No. W320-27-029

	Rev. 3 Signature/Date	Rev. 4 Signature/Date	Rev. 5 Signature/Date
Originator	Kelly Hayane 11/26/97		
Checked by	A. Ahmed 3.18.98		

INDEX

Design Analysis Page No.	Description
Appdx A	Autopipe File no: AY02A1R2 For Static Analysis and
	AY02A2R2 for Dynamic Analysis for Pump Pit jumper
Appdx B	Autopipe File no: AY02E-R2 for Static and Dynamic analysis for Sluice Pit jumper
Appdx C	Reference Documentation

REVISION

Revision No.	Description
3	Verify As-Built conditions.
	Pages ia, iia, and 6a added. Pages iii, 1, 5, and 10 revised.

CALCULATION CROSS INDEX (Typical)

Subject Calculation No.: W320-27-029

Subject Calculation Revision No.	Superceded by Calculation No.	These interfacing calculation/documents provide input to the subject calculation, and if revised may require revision of the subject calculation.		Results and conclusions of the subject calculation are used in these interfacing calculations and/or documents		Does the output interface calculation/ documents require revision?		Has the output interfacecalculation/ documents been revised?		Discipline manager's signature and date indicating evaluation complete.
		Calculation/Document No.	Revision No.	Calculation/Document No.	Revision No.	Yes	No	Yes	No	
3	NA	H-2-818501, Sheet 1	~~2~~ 3	NA			X		X	Danny L. Evans 7/20/98
		H-2-818503, Sheet 1	2				X		X	
		H-2-818503, Sheet 2	1				X		X	
		H-2-818544, Sheet 1	~~0~~ 1	△3			X		X	
		H-2-818544, Sheet 2	~~1~~ 2				X		X	
		H-2-818545, Sheet 1	~~1~~ 2.				X		X	

KEH 1975.00 (12/88)

DESIGN ANALYSIS

Client WESTINGHOUSE HANFORD COMPANY
Subject AY FARM - JUMPER STRESS ANALYSIS
PROJECT W-320 WASTE RETRIEVAL for TANK 241-C-106
Location: C TANK FARM - 200 W.

WO/Job No. ER4319
Date 8/31/95
Checked 9/11/95
Revised

Filename: AY02E.WP
By: M.M. Ahmed
By: M. K. Pal
By:

Rev-1 By: M.M. Ahmed 7/12/96
Checked By: D.L. Stone 7/15/96

Rev-2, By: A. Ahmed 3.12.97
Checked By: D. Stone 3-12-97

Rev-3 By: K. Hayase 11/26/97
Chk By: A. Ahmed 3.18.98

OBJECTIVE:

The objectives of this calculation are:

1. Perform static and dynamic piping stress analysis of the "AY Tank Farm" Jumper Assemblies in order to be in compliance with the Code ASME B31.3 requirements.

2. Qualify the Integral Seal Block (ISB) Jumper connectors for loads exerted by piping in accordance with document WHC-SD-W236A-DA-002, Rev-0

3. Prepare a report on piping loads exerted on pit wall at pipe penetration location.

REV-1:
To incorporate the design changes made by the ECN NO:W-320-380 | Rev-1

REV-2:
To incorporate the design changes made by the ECN NO:W-320-587 | Rev-2

Rev-3: Verify As-built conditions. | 3

DESIGN CRITERIA:

1. ASME CODE B31.3-93 with Addenda up to 1994.
2. SDC 4.1, REV-12. (Now FDNW Practice # 134.215, 1217)
3. PROJECT W-320 FDC: WHC-SD-W320-FDC-001, REV. ~~2~~ 4
4. WHC-SD-W236A-DA-002, Rev-0

| 3

DESIGN INPUTS:

GENERAL (Applicable to all Jumpers)					
Ambient Temperature	40°F				(Ref. 3)
Design Temperature:	180°F				(Ref. 3)
Design Pressure:	325 psig				(Ref: 10)
Pipe Materials:	ASTM A312 TP304L				(Ref: 19)
Pipe Sizes:	2 in., 3 in. and 4 in.				(Ref: 19)
Pipe Wall	Schedule 40				(Ref: 5)
Safety Class category:	SC-3				(Ref. 4)
Corrosion Allowance	0.06 inches				(Ref. 7)
B31.3 Code Allowable stress	16700 psi				(Ref: 1)
Flanges	300# ANSI rated				(Ref. 21)
Connector weights	4": 122 lbs(Vert)	3": 77 lbs	2": 29 lbs		(Ref: 9)
	4": 120 lbs(Horz)				
Nozzle weights	4": 11 lbs	3": 6.5 lbs	2": 2.5 lbs		(Ref: 9)
Kickplate weights	4": 16.5 lbs	3": 12 lbs	2": 3.5 lbs		(Ref: 9)

DESIGN ANALYSIS

Client WESTINGHOUSE HANFORD COMPANY
Subject AY FARM - JUMPER STRESS ANALYSIS
PROJECT W-320 WASTE RETRIEVAL for TANK 241-C-106
Location: C TANK FARM - 200 W.

WO/Job No. ER4319
Date 8/31/95
Checked 9/11/95
Revised

Filename: AY02E.WP
By: M.M. Ahmed
By: M. K. Pal
By:

Rev-1 By: M.M. Ahmed 7/12/96
Checked By: D.L. Stone 7/15/96

Rev-2 By: M. Ahmed 3.12.97
Checked By: D.L. Stone 3.12.97

JUMPER U2-A, B SLUICE PIT 241-AY-02E (Autopipe Filename: AY02E-R2) I Rev-2

Process Fluid:	241-AY-102 Supernate	(Ref: 20)
Specific gravity:	1.12	(Ref: 8)
Piping Dimensions:	Dwg: B503AR2, Rev-2	(Ref: 19)
Pressure Element Weight	4": 27 lbs 2": 12 lbs	(Ref. 18)
Pump	W_{Pump} = 1000 lbs I Rev-1	(Ref: 17)
Pump Motor	$W_{Pump\ Motor}$ = 2250 lbs I Rev-1	(Ref: 17)
Blank 2" Connector with Counter Weight	86.98 lbs	(Ref. 22)
4" -2 Way Ball Valve w/ Actuator	93 lbs	(Ref: 15)

JUMPER U11-A PUMP PIT 241-AY-02A (Autopipe Filename: AY02A1R2 & AY02A2R2) I Rev-2

Process Fluid:	241-C-106 Slurry	(Ref: 20)
Specific gravity:	1.2	(Ref: 3)
Piping Dimensions:	H-2-818501, Rev-2	(Ref: 19)
Density/Flow/Temp sensor	153 lbs	(Ref: 24)
3"- 3 Way Ball Valve	65 lbs	(Ref: 15)

DESIGN METHODOLOGY:

AY Farm Jumper Piping Assemblies include Jumper U2-A that is located in Sluice Pit 241-AY-02E I Rev-1 and Jumper U11-A located in Pump Pit AY-02A. I Rev-2

The jumper assembly models include connectors and nozzles. The nozzles are considered to be rigidly anchored either to pit walls or cover plate for tanks (H-2-818545, Ref:19). I Rev-1

The jumper connectors used on W-320 project are PUREX Connectors. However for analysis I Rev-1 purpose, assumed as Integral Seal Block (ISB) connectors (Ref:9) The document WHC-SD-W236A-DA -002 (Ref:22) provides all the analytical data such as connector stiffness, acceptable piping loads & seating forces for the ISB connectors. These connectors have been modeled in Autopipe as short radius elbows and flexible couplings with specified translation and rotational stiffness. The connector and nozzle weights are imposed at Flexible coupling.

The weights of structural steel assemblies and lifting bails used to connect jumper piping to nozzles during installation are calculated and imposed at appropriate points.

Stress analysis of the jumpers has been performed in accordance with ASME B31.3 for sustained, thermal and seismic loading (Ref. 1) using the computer program "Autopipe" Version-4.6 by "Engineering Design Automation" (EDA) (Ref. 11).

Client WESTINGHOUSE HANFORD COMPANY
Subject AY FARM - JUMPER STRESS ANALYSIS
PROJECT W-320 WASTE RETRIEVAL for TANK 241-C-106
Location: C TANK FARM - 200 W.

WO/Job No. ER4319
Date 8/31/95
Checked 9/11/95
Revised

Filename: AY02E.WP
By: M.M. Ahmed
By: M. K. Pal
By:

Rev-1 By: M.M. Ahmed 7/12/96
Checked By: D.L. Stone 7/15/96

Rev-2, By: M. Ahmed 3.12.97
Checked By: D. Stone 3.12.97

SUSTAINED LOADS:

The "AutoPipe" program checks the sustained stress (the summation of gravity and pressure stresses) against the B31.3 Code Allowable stress "S" for the material specified for each jumper piping.

THERMAL (DISPLACEMENT) STRESS:

The maximum design temperature for the pipe of 180°F and the ambient temperature of 40°F has been used in "AutoPipe" program to qualify the thermal expansion stress to the Code B31.3 allowable for displacement stress, "Sa".

SEISMIC STRESSES:

The jumper piping has been categorized as Safety Class 3. However the pit structure is classified as Safety Class 1 category. In order to perform Safety Class 3/1 analysis for this investigation, dynamic response spectra analysis is performed using Safety class-1, "Fig 3" seismic response spectra (5% Damping) of SDC 4.1, Rev-12 (Ref.2). This response spectra is created in "AutoPipe" as "SC1" and used in this dynamic analysis. Autopipe qualifies seismic stresses as occasional stress with the code allowable 1.33S.

The Jumper Connectors are qualified in accordance with WHC-SD-236A-DA-002, Rev-0 (Ref:22) Table 3.4 Acceptable piping loads. The acceptable axial force is limited to allowable seating forces for 50 ft-lb torque of Table 3.3 assuming all the actual axial loads tend to un-seat connector assembly. This results in conservative analysis. The acceptable loads are not increased by 1/3 as permitted on page-6 of Ref:22, which is conservative. The interaction of loads for critical connector is calculated (See page-7 of this calculations) as specified on page-7 of Ref:22.

HYDRO-STATIC ANALYSIS: I Rev-2

The Jumper Assembly U11-A in pump pit, as a worst case basis, has been analyzed for Hydro-Test pressure. The Hydro-Test pressures is considered as 490 psi which is 1.5 times of the design pressure 325 psi in accordance with ASME Code B31.3. The AutoPipe program combines pressure load with gravity load to obtain Sustained stress and compares against Code allowable for this category.

Client WESTINGHOUSE HANFORD COMPANY
Subject AY FARM - JUMPER STRESS ANALYSIS
PROJECT W-320 WASTE RETRIEVAL for TANK 241-C-106
Location: C TANK FARM - 200 W.

WO/Job No. ER4319
Date 8/31/95
Checked 9/11/95
Revised

Filename: AY02E.WP
By: M.M. Ahmed
By: M. K. Pal
By:

Rev-1 By: M.M. Ahmed 7/12/96
Checked By: D.L. Stone 7/15/96

Rev-2 By: M. Ahmed 3-12-97
Checked By: DLS 3-12-97

The following describes the modelling and analysis techniques unique to individual jumpers.

JUMPER U2-A, SLUICE PIT

Jumper U2-A includes the piping extending from the Tank 102 AY Submersible Pump Assembly nozzle (A) to the Tank 102 AY Booster Pump, and from the Booster Pump to the Transfer Line nozzle (U-2). The "Frame" feature of the "Autopipe" program has been used to assimilate the Booster Pump Assembly in order to consider the adequate stiffness of the pump in the system. The weight of the pump and motor is imposed at locations corresponding the centers of gravity of the pump and motor. The seismic stabilizer is represented in the model by Channel steel C3x4.1 that connect to the lifting frame sub-assembly and anchored to the pit wall. I Rev-1

A Gravity support (Y-stop) has been modeled directly below the pump assembly which is seated on concrete pedestal. I Rev-1

Weight of instrumentation has been applied at the instrument center on the pipe with flanges input as 300# ANSI rated in accordance with the 325 psig design pressure.

Because Autopipe does not provide an eccentric reducer component, the eccentric reducers are modeled as concentric reducers.

JUMPER U11-A, PUMP PIT I Rev-2

The density/Flow/Temperature Sensor has been modelled as rigid section because it is relatively rigid compared to pipe section. The weight of the Sensor is equally divided and imposed at three locations where it is supported by the structural steel members.

Since three way valve can not be modelled in AutoPipe, it has been modelled as three separate valves with one third of weight of the 3" 3-Way Ball Valve.

The jumper supporting dunnage steel is modelled as the Frame members. The Guide and Y-stop supports are modelled at proper locations. Since AutoPipe can not perform Non-Linear dynamic analysis, Y-stop is not considered in Seismic Response Spectra analysis.

PIPING LOADS AT BUILDING PENETRATION ANCHORS I Rev-2

The Pipe Nozzle (U-2 & U-11) Loads at Building Penetrations are summarized on page no:8.

Client WESTINGHOUSE HANFORD COMPANY
Subject AY FARM - JUMPER STRESS ANALYSIS
PROJECT W-320 WASTE RETRIEVAL for TANK 241-C-106
Location: C TANK FARM - 200 W.

WO/Job No. ER4319
Date 8/31/95
Checked 9/11/95
Revised

Filename: AY02E.WP
By: M.M. Ahmed
By: M. K. Pal
By:

Rev 3 By: K. Hayase 11/20/97
Chk By: M. Ahmed 3.18.98

Rev-1 By: M.M. Ahmed 7/12/96
Checked By: D.L. Stone 7/15/96

Rev-2, By: M. Ahmed 3.12.97
Checked By: DL Stone 3-12-97

ASSUMPTIONS: I Rev-1

1. It is assumed that the lifting bail and structural steel assemblies designed to support the jumper piping during installation will be supported by the jumper during operation.

2. ISB jumper connectors data considered in analysis is compatible with the PUREX connector used.

3. Building structures and tank nozzles are structurally adequate to withstand pipe loads.

REFERENCES:

1. ASME Code B31.3 and B31.3a-1994 Addenda for "Chemical and Petroleum Refinery."

2. SDC 4.1, Rev. 12, "Standard Architecture & Civil Design Criteria."
(Now FDNW Practice #134.215.1217, Design Loads for Facilities)
3. WHC-SD-W320-FDC-001, Rev-~~2~~ 4. "Functional Design Criteria for Tank 241-C-106 Waste Retrieval, Project W-320". 3

4. WHC-SD-WM-SEL-033, Rev-1, "Safety Equipment List for 241-C-106 Waste Retrieval Project W-230"

5. Construction specifications W-320-C5, Rev-0 , Section 15493 for piping materials.

6.Construction Specification No: B-131-C1, Section 15415 for piping materials.

7. Calculation No: W-030-011, Rev-1 for "Fouling factor and Corrosion rate."

8. *Data Compendium*, Bruce A. Castaing

9. Jumper Design Fabrication Drawings: H-2-32440-2 I Rev-1

10. DSI from C.D.Jones dated March 28, 1994 "Design Pressure for Slurry and Sluice Pumps".

11. Computer program "AutoPipe" Version 4.6 by "Engineering Design Automation."

12. Computer Program "EXCEL" Version 4.0, by Microsoft.

13. Crane Technical Paper No: 410, 22nd Printing-1986.

14. Ryerson Stock List and Data Book, 1985-86 Edition, Joseph T. Ryerson & Son, Inc.

Rev-1, By: M.M. Ahmed 7/12/96 Rev-2: By: M. Ahmed 3.12.97
Checked By: D.L. Stone 7/15/96 Checked By: DL Stone 3-12-97

15. PBM Reference Book Sec. II (SP Series) and Sec. IV (MP Series), PBM, Inc.

16. Micro Motion, Inc. CMF300 Physical specifications. (Appendix-C)

17. Lawrence Pumps Inc. Vendor Dwg: 55641, Rev-2. (Appendix-C)

18. Red Valve Co. Inc., Vendor data on Series 40 Pressure Sensors. (Appendix-C)

19. Piping Arrangement and Detail drawings: H-2-818501 (2 Sheets) Rev-2, H-2-818503 (3 Sheets) Rev-2 and ECN No: W-320-587. I Rev-2

20. Process Flow Diagrams: H-2-818558 H-2-818559, and H-2-818560

21. ASME/ANSI B16.5

22. WHC-SD-W236A-DA-002, Rev-0 "Stress Analysis of Single Port (ISB) Jumper Connectors for 2-, 3-, and 4-in Sizes".

23. Seismic Design White Paper Project W-320 Tank 241-C-106 Sluicing

24. Micro-Motion Inc. Product Catalog. I Rev-2

CALCULATIONS:

The calculations are documented in this package as shown below. I Rev-2

AutoPipe stress analysis results	Appendices A & B
Jumper Connector load qualification	Page-7
Pit Wall Anchor Loads	Page-8
Jumper Piping 3D Isometric model for Autopipe	Pages- 9 & 10

CONCLUSION: I Rev-2

The review of the "AutoPipe" summary results attached as Appendices to this calculation indicates that all pipe stresses are in compliance with the requirements of ASME Code B31.3 requirements.

The Jumper qualification on page-7 indicates that ISB connectors are adequate for piping loads. The Piping loads on Pit walls at piping penetrations are summarized on page 8.

DESIGN ANALYSIS

Client: Numatec
Subject: AY Farm Jumper Stress Analysis
Project W-320 Waste Retrieval for Tank 241-C-106
Location: AY Tank Farm 200 East Area

WO/Job No.: ER4319/W-320
Date: 11/26/97 By: K. Hayase
Checked: 3.18.98 By: R. Ahmed
Revised: By:

Rev. 3

CONCLUSION (CONTINUED)

RA 3.18.98

Rev. 3 of this calculation verified the analysis against the as-built conditions ~~(as of 11/24/97)~~. The analysis includes the weights of valves, flow meters, and pressure sensors. These weights are not critical to the results of the analysis. Therefore, any differences between the weights used in the analysis and the approved vendor data are negligible. There are minor dimensional differences (± 2") between the Autopipe models and the as-built conditions, however, these differences are also negligible.

Client WESTINGHOUSE HANFORD COMPANY
Subject AY FARM - JUMPER STRESS ANALYSIS
PROJECT W-320 WASTE RETRIEVAL for TANK 241-C-106
Location: C TANK FARM - 200 W.

WO/Job No. ER4319
Date 8/31/95
Checked 9/11/95
Revised

Filename: AY02E.WP
By: M.M. Ahmed
By: M. K. Pal
By:

Rev-1, By: M.M. Ahmed 7/12/96
Checked By: D.L. Stone 7/15/96

Rev-2, By: M. Ahmed 3-12-97
Checked By: DL Stone 3-12-97

ISB JUMPER CONNECTOR LOADS QUALIFICATION I Rev-2

CONNECTOR LOCATION	AUTOPIPE FILE NAME & NODE	SIZE	CONNECTOR ACTUAL LOADS I Rev-2 loads/ ALLOWABLE LOADS						REF NO:
			Axial X (lbs)	Shear Y (lbs)	Shear Z (lbs)	Torsion Mx (ft-lb)	Bend My (ft-lb)	Bend Mz (ft-lb)	
SLUICE PIT Connector A	AY02E-R2 A01(N)	4"	399	547	310	26	20	81	APDX-B
Connector U-2	B10(F)	4"	1061	258	179	22	304	128	APDX-B
PUMP PIT Connector U-11	AY02A1R2 AY02A2R2 A04(N)	4"	135	348	234	62	161	212	APDX-A GR+T1 + RESP
Connector A	A19(F)	4"	566	144	144	35	151	552	APDX-A
Connector Allowable loads		4"	6310	2220	2220	780	1170	1170	Ref: 22

SEATING FORCES BETWEEN CONNECTOR & NOZZLES:

The axial allowable load considered in table above are limited to seating forces for 4" Connectors for 50 ft-lb (pre-load) torque as specified in Table 3.3(Ref:22). Since the actual axial forces are less than the allowable seating forces, the connector will not be un-seated from the nozzle.

INTERACTION OF SHEAR, TORSION AND BENDING:

I = fyz/Fyz + [mx]/Mx + myz/Myz < 1.0 Ref:22, page-7

Review of actual loads and allowable loads in the table above indicates that the Connector-A in the Pump Pit is more critical for interaction. I Rev-2

fyz = 204 lbs (SRSS of fy = 144 & fz = 144)

myz = 572 ft-lbs (SRSS of my = 151 & mz = 552)

I = 204/2220 + 35/780 + 572/1170

I = 0.63 < 1.00 As such Jumper Connectors are adequate.

Client WESTINGHOUSE HANFORD COMPANY
Subject AY FARM - JUMPER STRESS ANALYSIS
PROJECT W-320 WASTE RETRIEVAL for TANK 241-C-106
Location: C TANK FARM - 200 W.

WO/Job No. ER4319
Date 8/31/95
Checked 9/11/95
Revised

Filename: AY02E.WP
By: M.M. Ahmed
By: M. K. Pal
By:

Rev-2, By: M. Ahmed 4-12-97
Checked By: DLSteen 3-12-97

PIT WALL ANCHOR LOADS I Rev-2

NOZZLE	ORIENTATION	LOAD CASES	LOADS (FORCES IN POUNDS & MOMENTS IN FT-LBS)						REF:
			Fx	Fy	Fz	Mx	My	Mz	
U-11 PUMP PIT AY-02A	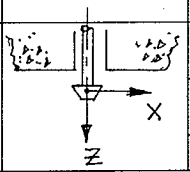	Thermal	63	390	52	183	20	35	AY02A1R2 A00
		Seismic	205	102	90	209	200	27	AY02A2R2 A00
		Total	268	492	142	392	220	62	
U-2 SLUICE PIT AY-02E	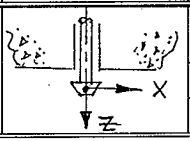	Thermal	125	865	157	449	63	387	AY02E-R2 B12
		Seismic	102	86	125	94	53	68	SAME
		Total	227	951	282	543	116	455	

Notes:

1. Seismic Loads could be positive or negative.
2. Thermal loads specified are the algebric sum of gravity and thermal loads.
3. Total loads specified are the absolute sum of thermal and seismic loads disregarding the signs.

Client	WESTINGHOUSE HANFORD COMPANY	WO/Job No. ER4319	Filename: AY02E.WP
Subject	AY FARM- JUMPER STRESS ANALYSIS	Date 8/31/95	By: M. M. Ahmed
	PROJECT W-320 WASTE RETRIEVAL FOR TANK C-106	Checked 9/11/95	By: M. K. Pal
Location	C TANK FARM - 200W.	Revised	By:

Rev-2, By: M. Ahmed 3-12-97
Checked By: DL Stone 3-12-97

JUMPER ASSEMBLY PUMP PIT: AY-02A-U11-A

DWG: H-2-818501
ACAD FILE: AY02A1
APIPE FILE: AY02A1R2
& AY02A2R2
PREPARED BY:
MM AHMED
CHECKED BY:
DL STONE

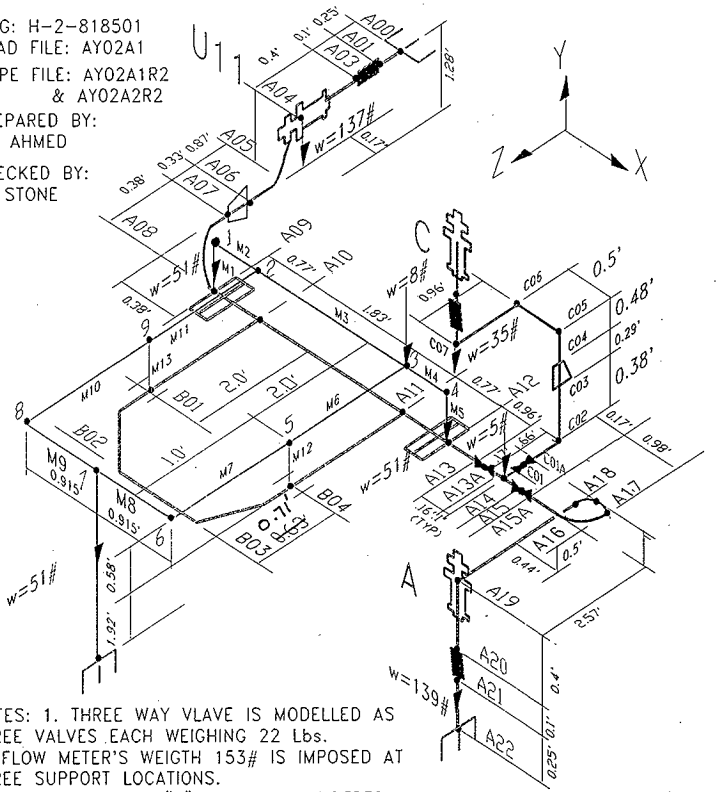

NOTES: 1. THREE WAY VLAVE IS MODELLED AS THREE VALVES EACH WEIGHING 22 Lbs.
2. FLOW METER'S WEIGTH 153# IS IMPOSED AT THREE SUPPORT LOCATIONS.
3. Y-STOP AT NODE "7" IS NOT CONSIDERED FOR DYNAMIC ANALYSIS.

DESIGN ANALYSIS

Client	WESTINGHOUSE HANFORD COMPANY	WO/Job No. ER4319	Filename: AY02E.WP
Subject	AY FARM- JUMPER STRESS ANALYSIS	Date 8/31/95	By: M. M. Ahmed
	PROJECT W-320 WASTE RETRIEVAL FOR TANK C-106	Checked 9/11/95	By: M. K. Pal
Location	C TANK FARM - 200W.	Revised	By:

Rev 3 By: K. Hayase 11/26/97
Chk By: M. Ahmed 3-18-98

Rev-2, By: M. Ahmed 3-12-97
Checked By: D. L. Stone 3-12-97

PROJECT W-320: JUMPER ASSY FOR SLUICE PIT

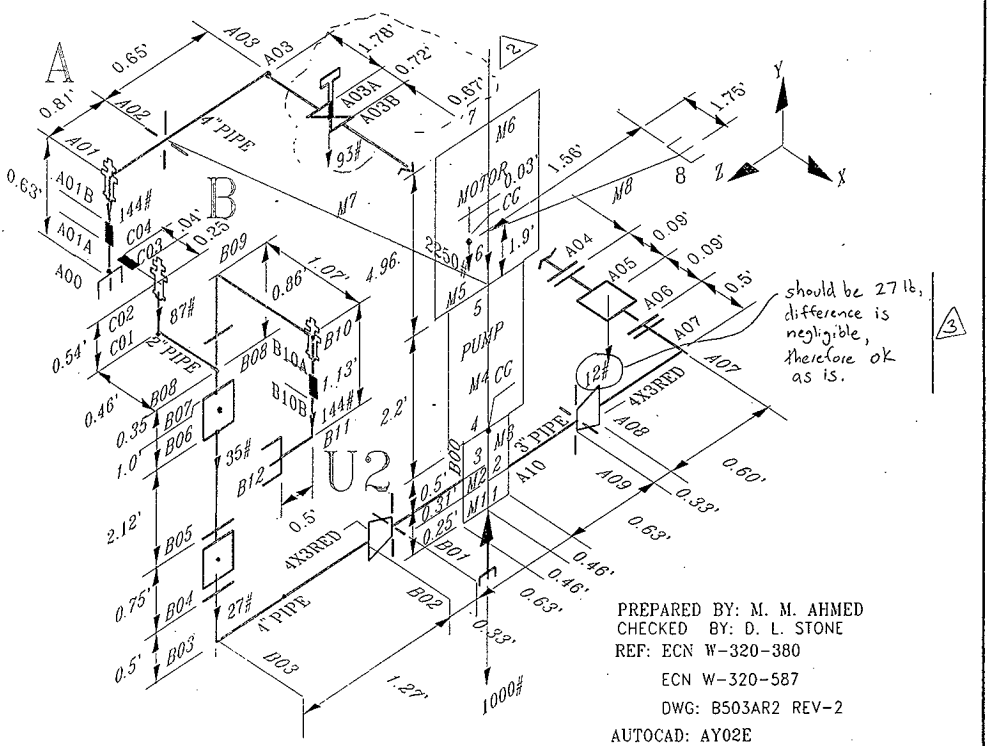

PREPARED BY: M. M. AHMED
CHECKED BY: D. L. STONE
REF: ECN W-320-380
ECN W-320-587
DWG: B503AR2 REV-2
AUTOCAD: AY02E
AUTOPIPE: AY02E-R2

Valve at A03A should be closer to A04, however, the overall length between A03 & A07 is correct, therefore ok as is.

POINT DATA LISTING

POINT NAME	TYPE	OFFSETS (ft) X	Y	Z	PIPE ID	DESCRIPTION
*** SEGMENT A						
A00	Run	0	0	0	4"PIPE	
A01	Flex	0	0	0.25		Wt= 137 lb , Ar= 3.2 sq.in Axial= 23300000 Tors= 304.0 Y-Shear= RIGID Bend= 2080.0 Z-Shear= RIGID Bend= 2080.0
A03	Run	0	0	0.10		
A04	Bend	0	0	0.40		Short Elbow, Radius = 4.00 inch Bend angle change = 90.00 deg Mid point at 50.00 percent SIF - In 2.56, Out = 2.13 Flex = 7.908
A05	Bend	-0.17	-1.28	0		Long Elbow, Radius = 6.00 inch Bend angle change = 90.00 deg Mid point at 50.00 percent SIF - In 1.95, Out = 1.63 Flex = 5.272
A06	Redu	0	0	0.87		
A07	Run	0	0	0.33	3"PIPE	
A08	Bend	0	0	0.38		Long Elbow, Radius = 4.50 inch Bend angle change = 90.00 deg Mid point at 50.00 percent SIF - In 1.78, Out = 1.48 Flex = 4.577
A09	Run	0.38	0	0	RIGID	
A10	Tee	0.77	0	0		
A11	Tee	1.83	0	0		
A12	Run	0.77	0	0	3"PIPE	
A13	Valv	0.96	0	0		Rating = 300, Weight = 22 lb Surface factor = 4.40, SIF = 1.00
A13A	Run	0.16	0	0		
A14	Tee	0.10	0	0		
A15	Valv	0.10	0	0		Rating = 300, Weight = 22 lb Surface factor = 4.40, SIF = 1.00
A15A	Run	0.16	0	0		
A16	Bend	0.98	0	0		Long Elbow, Radius = 4.50 inch Bend angle change = 90.00 deg Mid point at 50.00 percent SIF - In 1.78, Out = 1.48 Flex = 4.577
A16 F	Far				4"PIPE	
A17	Bend	0	-0.25	-0.83		Short Elbow, Radius = 4.00 inch

POINT DATA LISTING

POINT NAME	TYPE	OFFSETS (ft) X	Y	Z	PIPE ID	DESCRIPTION
						Bend angle change = 84.21 deg Mid point at 50.00 percent SIF - In 2.56, Out = 2.13 Flex = 7.908
A18	Bend	-0.67	-0.25	0		Short Elbow, Radius = 4.00 inch Bend angle change = 90.00 deg Mid point at 50.00 percent SIF - In 2.56, Out = 2.13 Flex = 7.908
A19	Bend	0	0	2.57		Short Elbow, Radius = 4.00 inch Bend angle change = 90.00 deg Mid point at 50.00 percent SIF - In 2.56, Out = 2.13 Flex = 7.908
A20	Flex	0	-0.40	0		Wt= 139 lb , Ar= 3.2 sq.in Axial= 23300000 Tors= 304.0 Y-Shear= RIGID Bend= 2080.0 Z-Shear= RIGID Bend= 2080.0
A21	Run	0	-0.10	0		
A22	Run	0	-0.25	0		
*** SEGMENT B						
A10	Tee	0.98	-1.28	2.33	RIGID	
B01	Run	0	0	2.00		
B02	Bend	0	0	0.71		Elbow, Radius = 6.00 inch Bend angle change = 90.00 deg SIF - In 1.00, Out = 1.00 Flex = 1.000
B03	Bend	1.83	0	0		Elbow, Radius = 6.00 inch Bend angle change = 90.00 deg SIF - In 1.00, Out = 1.00 Flex = 1.000
B04	Run	0	0	-0.71		
A11	Tee	0	0	-2.00		
*** SEGMENT C						
A14	Tee	4.80	-1.28	2.33	3"PIPE	
C01	Valv	0	0	-0.10		Rating = 300, Weight = 22 lb Surface factor = 4.40, SIF = 1.00
C01A	Run	0	0	-0.16		
C02	Bend	0	0	-0.66		Long Elbow, Radius = 4.50 inch Bend angle change = 90.00 deg

POINT DATA LISTING

POINT NAME	TYPE	OFFSETS (ft) X	Y	Z	PIPE ID	DESCRIPTION
						Mid point at 50.00 percent SIF - In 1.78, Out = 1.48 Flex = 4.577
C03	Redu	0	0.38	0		
C04	Run	0	0.29	0	2"-PIPE	
C05	Bend	0	0.48	0		Long Elbow, Radius = 3.00 inch Bend angle change = 90.00 deg Mid point at 50.00 percent SIF - In 1.73, Out = 1.44 Flex = 4.404
C06	Bend	-0.50	0	0		Long Elbow, Radius = 3.00 inch Bend angle change = 90.00 deg Mid point at 50.00 percent SIF - In 1.73, Out = 1.44 Flex = 4.404
C07	Run	0	0	0.96		

Total weight of empty pipes : 132 lb

COMPONENT DATA LISTING

POINT NAME	COORDINATE(ft) X	Y	Z	DATA TYPE	DESCRIPTION
*** SEGMENT A					
A00	0.00	0.00	0.00	ANCHOR	Rigid Thermal movements : None
A01	0.00	0.00	0.25		
A03	0.00	0.00	0.35		
A04 N	0.00	0.00	0.42		
A04	0.00	0.00	0.75	TI	
A04 M	-0.01	-0.10	0.65		
A04 F	-0.04	-0.33	0.75		
A05 N	-0.10	-0.78	0.75		
A05	-0.17	-1.28	0.75	TI	
A05 M	-0.15	-1.13	0.90		
A05 F	-0.17	-1.28	1.25		
A06	-0.17	-1.28	1.62		
A07	-0.17	-1.28	1.95		
A08 N	-0.17	-1.28	1.95		
A08	-0.17	-1.28	2.33	TI	
A08 M	-0.06	-1.28	2.22		
A08 F	0.21	-1.28	2.33		
A09	0.21	-1.28	2.33	FLANGE	Weld neck SIF = 1.00 Rating = 300, Weight = 15 lb
				FLANGE	Weld neck SIF = 1.00 Rating = 300, Weight = 15 lb
A10	0.98	-1.28	2.33	TEE	B16.9 welding tee SIF - In = 1.00, Out = 1.00
A11	2.81	-1.28	2.33	TEE	B16.9 welding tee SIF - In = 1.00, Out = 1.00
A12	3.58	-1.28	2.33	FLANGE	Weld neck SIF = 1.00 Rating = 300, Weight = 138 lb
				FLANGE	Weld neck SIF = 1.00 Rating = 300, Weight = 138 lb
A13	4.54	-1.28	2.33		
A13A	4.70	-1.28	2.33		
A14	4.80	-1.28	2.33	TEE	B16.9 welding tee SIF - In = 1.22, Out = 1.30
				WEIGHT	5 lb , No offsets
A15	4.90	-1.28	2.33		
A15A	5.06	-1.28	2.33		
A16 N	5.66	-1.28	2.33		
A16	6.04	-1.28	2.33	TI	
A16 M	5.93	-1.31	2.22		
A16 F	6.04	-1.39	1.97		
A17 N	6.04	-1.44	1.79		
A17	6.04	-1.53	1.50	TI	
A17 M	5.96	-1.54	1.58		
A17 F	5.76	-1.64	1.50		
A18 N	5.68	-1.66	1.50		
A18	5.37	-1.78	1.50	TI	
A18 M	5.46	-1.75	1.60		

C O M P O N E N T D A T A L I S T I N G

POINT NAME	---COORDINATE(ft X	Y	Z	)--- DATA TYPE	DESCRIPTION
A18 F	5.37	-1.78	1.83		
A19 N	5.37	-1.78	3.74		
A19	5.37	-1.78	4.07	TI	
A19 M	5.37	-1.88	3.97		
A19 F	5.37	-2.11	4.07		
A20	5.37	-2.18	4.07		
A21	5.37	-2.28	4.07		
A22	5.37	-2.53	4.07	ANCHOR	Rigid Thermal movements : None
*** SEGMENT B					
A10	0.98	-1.28	2.33	TEE	B16.9 welding tee SIF - In = 1.00, Out = 1.00
B01	0.98	-1.28	4.33	GUIDE	ID : B01 1, Connected to 9 Stiffness = RIGID Gap-down = 0.00, Above = 0.06 inch Gap-left = 0.06, Right = 0.06 inch Friction = 0.30 Gaps set Weightless
B02 N	0.98	-1.28	4.54		
B02	0.98	-1.28	5.04	TI	
B02 F	1.48	-1.28	5.04		
B03 N	2.31	-1.28	5.04		
B03	2.81	-1.28	5.04	TI	
B03 F	2.81	-1.28	4.54		
B04	2.81	-1.28	4.33	GUIDE	ID : B04 1, Connected to 5 Stiffness = RIGID Gap-down = 0.00, Above = 0.06 inch Gap-left = 0.06, Right = 0.06 inch Friction = 0.30 Gaps set Weightless
A11	2.81	-1.28	2.33	TEE	B16.9 welding tee SIF - In = 1.00, Out = 1.00
*** SEGMENT C					
A14	4.80	-1.28	2.33	TEE	B16.9 welding tee SIF - In = 1.22, Out = 1.30
C01	4.80	-1.28	2.23		
C01A	4.80	-1.28	2.07		
C02 N	4.80	-1.28	1.78		
C02	4.80	-1.28	1.41	TI	
C02 M	4.80	-1.17	1.52		
C02 F	4.80	-0.90	1.41		
C03	4.80	-0.90	1.41		
C04	4.80	-0.61	1.41		
C05 N	4.80	-0.38	1.41		
C05	4.80	-0.13	1.41	TI	
C05 M	4.73	-0.20	1.41		
C05 F	4.55	-0.13	1.41		

C O M P O N E N T D A T A L I S T I N G

POINT NAME	---COORDINATE(ft X	Y	Z	)--- DATA TYPE	DESCRIPTION
C06 N	4.55	-0.13	1.41		
C06	4.30	-0.13	1.41	TI	
C06 M	4.37	-0.13	1.48		
C06 F	4.30	-0.13	1.66		
C07	4.30	-0.13	2.37	WEIGHT 35 lb	, No offsets

Number of points in the system : 73

P I P E D A T A L I S T I N G

Pipe ID/ Material	Nom/ Sch	O.D. inch	-----Thickness(inch)----- W.Th.	Corr	Mill	Insu	Ling	Spec Grav	Weight(lb/ft) Pipe	Other	Total
4"PIPE	4	4.500	0.237	0.06	0.03	0	0	1.20	11.04	0	17.66
A312-TP304L	STD										
3"PIPE	3.000	3.500	0.216	0.06	0.03	0	0	1.20	7.75	0	11.60
A312-TP304L	STD										
2"-PIPE	2.000	2.375	0.154	0.06	0.02	0	0	1.20	3.74	0	5.48
A312-TP304L	STD										

M A T E R I A L D A T A L I S T I N G

Material Name	Pipe ID	Density lb/cu.ft	Pois. Ratio	Temper. deg F	Modulus E6 psi	Expans. in/100ft	Allow. psi
A312-TP304L	4"PIPE	501.0	0.30	40.0	28.42		16700.0
				180.0		1.5442	16700.0
A312-TP304L	3"PIPE	501.0	0.30	40.0	28.42		16700.0
				180.0		1.5442	16700.0
A312-TP304L	2"-PIPE	501.0	0.30	40.0	28.42		16700.0
				180.0		1.5442	16700.0

FRAME POINT DATA LISTING

POINT NAME	COORDINATE(ft) X	Y	Z	DATA TYPE	DESCRIPTION
A09	0.21	-1.28	2.33		
1	0.21	-0.70	2.33	WEIGHT	51 lb , No offsets
2	0.98	-0.70	2.33		
3	2.81	-0.70	2.33	WEIGHT	8 lb , No offsets
4	3.58	-0.70	2.33	WEIGHT	51 lb , No offsets
A12	3.58	-1.28	2.33		
5	2.81	-0.70	4.33		
6	2.81	-0.70	5.33		
7	1.89	-0.70	5.33	Y-STOP	ID : 7 1, Connected to Ground Gap-Below = 0.00, Above = 0.50 inch Friction = 0.30 Gaps set Weightless
				WEIGHT	51 lb , No offsets
8	0.98	-0.70	5.33		
9	0.98	-0.70	4.33		
B01	0.98	-1.28	4.33		
10	0.98	-0.70	2.33		
B05	2.81	-1.28	4.33		

BEAM DATA LISTING

BEAM ID		POINT NAME	LENGTH (ft)	SECTION ID/ MATERIAL ID	BETA ANGLE	RIGID END(ft)	RELEASE Ax	Y-Y	Z-Z
M1	From	A09	0.58	C4X5.4	0.00	0.00	N	N	N
	To	1		A36		0.00	N	N	N
M2	From	1	0.77	C4X5.4	90.00	0.00	N	N	N
	To	2		A36		0.00	N	N	N
M3	From	2	1.83	C4X5.4	90.00	0.00	N	N	N
	To	3		A36		0.00	N	N	N
M4	From	3	0.77	C4X5.4	90.00	0.00	N	N	N
	To	4		A36		0.00	N	N	N
M5	From	4	0.58	C4X5.4	90.00	0.00	N	N	N
	To	A12		A36		0.00	N	N	N
M6	From	3	2.00	C4X5.4	90.00	0.00	N	N	N
	To	5		A36		0.00	N	N	N
M7	From	5	1.00	C4X5.4	90.00	0.00	N	N	N
	To	6		A36		0.00	N	N	N
M8	From	6	0.92	C4X5.4	90.00	0.00	N	N	N
	To	7		A36		0.00	N	N	N
M9	From	7	0.91	C4X5.4	90.00	0.00	N	N	N
	To	8		A36		0.00	N	N	N
M10	From	8	1.00	C4X5.4	90.00	0.00	N	N	N
	To	9		A36		0.00	N	N	N
M11	From	9	2.00	C4X5.4	90.00	0.00	N	N	N
	To	10		A36		0.00	N	N	N
M12	From	5	0.58	C4X5.4	90.00	0.00	N	N	N
	To	B05		A36		0.00	N	N	N
M13	From	9	0.58	C4X5.4	90.00	0.00	N	N	N
	To	B01		A36		0.00	N	N	N

CROSS SECTION LISTING

Section ID	Area(sq.in)			Inertia (in**4)		
ID	Axial	Y-Shear	Z-Shear	Torsion	Y-Y Bend	Z-Z Bend
C4X5.4	1.59	0.74	0.62	0.0	0.3	3.8

BEAM MATERIAL LISTING

MATERIAL ID	Elastic modulus E6 psi	Poissons ratio	Yield Stress psi	Density lb/cu.ft	Expansion E-6 /F	Ultimate stress psi
A36	29.000	0.250	36000	490.00	6.50000	58000

TEMPERATURE AND PRESSURE DATA

POINT NAME	CASE 1 PRESS. psi	CASE 1 TEMPER deg F	CASE 1 EXPAN. in/100ft	CASE 2 PRESS. psi	CASE 2 TEMPER deg F	CASE 2 EXPAN. in/100ft	CASE 3 PRESS. psi	CASE 3 TEMPER deg F	CASE 3 EXPAN. in/100ft
*** SEGMENT A									
A00	490	180	1.544						
A07	490	180	1.544						
A09	490	180	0.000						
A12	490	180	1.544						
A16 F	490	180	1.544						
A22	490	180	1.544						
*** SEGMENT B									
A10	490	180	0.000						
A11	490	180	0.000						
*** SEGMENT C									
A14	490	180	1.544						
C04	490	180	1.544						
C07	490	180	1.544						

A N A L Y S I S S U M M A R Y

Current model revision number : 5

```
Static - Date and Time of analysis ............. Mar 12, 1997   9:02 AM
         Model Revision Number ................. 5
         Number of load cases .................. 2
         Load cases analyzed ................... GR T1
         Gaps/Friction/Yielding considered ..... Yes
         Tolerance - Force, Displacement ....... 100.00 lb   0.0162 in
         Friction - Factor, tolerance .......... 1.00   0.10
         Hanger design run ..................... No
         Cut short included .................... No
         Occasional load analysis type ......... Nonlinear
         Non-linear analysis summary file ...... AY02A1R2.LOG
         Base load cases for nonlinear analysis
                                                  GR = None
                                                  T1 = GR
         Weight of contents included ........... Yes
         Pressure stiffening case .............. 0
         Water elevation for buoyancy loads .... Not considered
```


1-C7-4981NT

CODE COMPLIANCE COMBINATIONS

Combination	Category	Method	Load	Factor	Allowable	Remarks
GR + Max P	Sustain	Sum	Gravity Max Long	1.00 1.00	Automatic	Default
Cold to T1	Expansion	Sum	Thermal 1	1.00	Automatic	Default
Max P	Hoop		Max Hoop	1.00	Automatic	Default

OTHER USER COMBINATIONS

Combination	Method	Load	Factor	Remarks
GR	Sum	Gravity	1.00	Default
T1	Sum	Thermal 1	1.00	Default
GR+T1	Sum	Gravity Thermal 1	1.00 1.00	User

CODE COMPLIANCE

Y - Factor 0.40
Weld efficiency factor 1.00
Range reduction factor 1.00
Design Pressure Factor 1.00
Minimum stress ratio used in reports... 0.00
Include corrosion in stress calcs. .... Y
Include torsion in code stress ..... N
Include axial force in code stress .... N
Longitudinal pressure calculation PD/4t
Include rigorous pressure ..... Not analyzed

D I S P L A C E M E N T S

Point name	Load combination	TRANSLATIONS (in) X	Y	Z	ROTATIONS (deg) X	Y	Z
*** Segment A begin ***							
A00	GR	0.000	0.000	0.000	0.000	0.000	0.000
	T1	0.000	0.000	0.000	0.000	0.000	0.000
	GR+T1	0.000	0.000	0.000	0.000	0.000	0.000
A01	GR	0.000	0.000	0.000	0.001	0.001	0.000
	T1	0.000	0.000	0.004	0.000	0.000	0.000
	GR+T1	0.000	0.000	0.004	0.001	0.000	0.000
A03	GR	0.000	0.000	0.000	0.034	0.024	-0.109
	T1	0.000	0.000	0.004	0.001	-0.005	-0.007
	GR+T1	0.000	0.000	0.004	0.035	0.019	-0.117
A04 N	GR	0.001	-0.001	0.000	0.034	0.024	-0.109
	T1	0.000	0.000	0.005	0.001	-0.005	-0.007
	GR+T1	0.000	-0.001	0.005	0.035	0.019	-0.117
A04 M	GR	0.000	-0.002	-0.001	0.034	0.026	-0.109
	T1	-0.001	-0.002	0.008	0.002	-0.004	-0.007
	GR+T1	-0.001	-0.004	0.008	0.035	0.022	-0.117
A04 F	GR	-0.005	-0.002	-0.002	0.029	0.027	-0.112
	T1	-0.002	-0.005	0.010	0.002	-0.003	-0.005
	GR+T1	-0.007	-0.008	0.008	0.031	0.024	-0.117
A05 N	GR	-0.016	-0.001	-0.004	0.028	0.028	-0.113
	T1	-0.003	-0.012	0.010	0.002	-0.002	-0.005
	GR+T1	-0.019	-0.013	0.005	0.030	0.025	-0.118
A05 M	GR	-0.024	-0.001	-0.006	0.021	0.028	-0.119
	T1	-0.004	-0.018	0.012	-0.001	0.001	0.002
	GR+T1	-0.027	-0.018	0.006	0.020	0.029	-0.117
A05 F	GR	-0.025	-0.001	-0.006	0.009	0.029	-0.121
	T1	-0.004	-0.020	0.017	-0.004	0.007	0.006
	GR+T1	-0.029	-0.021	0.011	0.005	0.036	-0.115
A06	GR	-0.023	-0.002	-0.006	0.006	0.029	-0.123
	T1	-0.003	-0.019	0.023	-0.004	0.009	0.008
	GR+T1	-0.026	-0.021	0.017	0.002	0.038	-0.115
A07	GR	-0.021	-0.002	-0.006	-0.001	0.029	-0.126
	T1	-0.003	-0.019	0.028	-0.004	0.011	0.011
	GR+T1	-0.023	-0.021	0.022	-0.005	0.040	-0.115

D I S P L A C E M E N T S

Point name	Load combination	TRANSLATIONS (in) X	Y	Z	ROTATIONS (deg) X	Y	Z
A08 N	GR	-0.021	-0.002	-0.006	-0.001	0.029	-0.126
	T1	-0.003	-0.019	0.028	-0.004	0.011	0.011
	GR+T1	-0.023	-0.021	0.022	-0.005	0.041	-0.115
A08 M	GR	-0.019	-0.004	-0.007	-0.043	0.031	-0.119
	T1	0.000	-0.018	0.032	-0.008	0.030	0.017
	GR+T1	-0.019	-0.022	0.025	-0.050	0.061	-0.102
A08 F	GR	-0.018	-0.009	-0.009	-0.064	0.033	-0.111
	T1	0.005	-0.017	0.031	-0.011	0.049	0.028
	GR+T1	-0.013	-0.026	0.022	-0.075	0.082	-0.083
A09	GR	-0.018	-0.009	-0.009	-0.065	0.033	-0.111
	T1	0.005	-0.017	0.031	-0.011	0.049	0.028
	GR+T1	-0.013	-0.026	0.022	-0.075	0.082	-0.083
A10	GR	-0.018	-0.027	-0.014	-0.065	0.033	-0.111
	T1	0.005	-0.012	0.023	-0.011	0.049	0.028
	GR+T1	-0.013	-0.039	0.009	-0.075	0.082	-0.083
A11	GR	-0.018	-0.070	-0.027	-0.065	0.033	-0.111
	T1	0.005	-0.001	0.004	-0.011	0.049	0.028
	GR+T1	-0.013	-0.071	-0.022	-0.075	0.082	-0.083
A12	GR	-0.018	-0.088	-0.032	-0.065	0.033	-0.111
	T1	0.005	0.003	-0.004	-0.011	0.049	0.028
	GR+T1	-0.013	-0.085	-0.036	-0.075	0.082	-0.083
A13	GR	-0.018	-0.106	-0.039	-0.095	0.034	-0.070
	T1	0.020	0.009	-0.013	-0.010	0.044	0.025
	GR+T1	0.002	-0.097	-0.052	-0.105	0.078	-0.045
A13A	GR	-0.018	-0.108	-0.040	-0.095	0.034	-0.070
	T1	0.022	0.009	-0.015	-0.010	0.044	0.025
	GR+T1	0.004	-0.098	-0.055	-0.105	0.078	-0.045
A14	GR	-0.018	-0.109	-0.041	-0.099	0.034	-0.067
	T1	0.024	0.010	-0.016	-0.010	0.043	0.025
	GR+T1	0.006	-0.099	-0.056	-0.108	0.077	-0.042
A15	GR	-0.018	-0.111	-0.041	-0.102	0.034	-0.064
	T1	0.026	0.010	-0.016	-0.010	0.042	0.024
	GR+T1	0.007	-0.100	-0.058	-0.111	0.076	-0.040
A15A	GR	-0.018	-0.113	-0.042	-0.102	0.034	-0.064
	T1	0.028	0.011	-0.018	-0.010	0.042	0.024
	GR+T1	0.010	-0.102	-0.060	-0.111	0.076	-0.040

D I S P L A C E M E N T S

Point name	Load combination	TRANSLATIONS (in) X	Y	Z	ROTATIONS (deg) X	Y	Z
A16 N	GR	-0.018	-0.120	-0.047	-0.120	0.035	-0.057
	T1	0.037	0.014	-0.023	-0.009	0.035	0.020
	GR+T1	0.019	-0.106	-0.070	-0.129	0.070	-0.037
A16 M	GR	-0.019	-0.126	-0.048	-0.134	0.034	-0.066
	T1	0.041	0.014	-0.026	-0.012	0.017	0.011
	GR+T1	0.022	-0.112	-0.074	-0.146	0.051	-0.054
A16 F	GR	-0.022	-0.136	-0.046	-0.171	0.035	-0.079
	T1	0.043	0.013	-0.030	-0.016	-0.003	0.010
	GR+T1	0.020	-0.123	-0.076	-0.188	0.032	-0.069
A17 N	GR	-0.025	-0.142	-0.044	-0.174	0.035	-0.080
	T1	0.043	0.011	-0.032	-0.016	-0.004	0.009
	GR+T1	0.018	-0.131	-0.077	-0.191	0.031	-0.071
A17 M	GR	-0.028	-0.149	-0.040	-0.203	0.042	-0.075
	T1	0.042	0.009	-0.036	-0.015	-0.017	0.011
	GR+T1	0.014	-0.140	-0.076	-0.218	0.025	-0.064
A17 F	GR	-0.030	-0.150	-0.033	-0.220	0.055	-0.069
	T1	0.040	0.007	-0.038	-0.010	-0.030	0.010
	GR+T1	0.009	-0.143	-0.071	-0.230	0.025	-0.060
A18 N	GR	-0.031	-0.149	-0.031	-0.222	0.055	-0.069
	T1	0.038	0.006	-0.038	-0.011	-0.030	0.009
	GR+T1	0.008	-0.143	-0.069	-0.232	0.024	-0.060
A18 M	GR	-0.030	-0.141	-0.025	-0.237	0.067	-0.075
	T1	0.034	0.005	-0.038	-0.009	-0.045	0.004
	GR+T1	0.004	-0.136	-0.063	-0.246	0.022	-0.071
A18 F	GR	-0.028	-0.127	-0.021	-0.266	0.071	-0.081
	T1	0.030	0.004	-0.035	-0.012	-0.059	0.001
	GR+T1	0.003	-0.122	-0.057	-0.277	0.012	-0.080
A19 N	GR	0.001	-0.018	-0.021	-0.270	0.071	-0.069
	T1	0.005	0.009	-0.006	-0.012	-0.066	-0.002
	GR+T1	0.006	-0.008	-0.027	-0.282	0.005	-0.071
A19 M	GR	0.003	-0.005	-0.016	-0.242	0.073	-0.066
	T1	0.002	0.008	-0.002	-0.009	-0.066	-0.003
	GR+T1	0.005	0.004	-0.018	-0.251	0.006	-0.068
A19 F	GR	0.001	0.000	-0.005	-0.208	0.075	-0.058
	T1	0.000	0.005	0.000	-0.007	-0.066	-0.003
	GR+T1	0.002	0.005	-0.005	-0.215	0.009	-0.061

D I S P L A C E M E N T S

Point name	Load combination	TRANSLATIONS (in) X	Y	Z	ROTATIONS (deg) X	Y	Z
A20	GR	0.001	0.000	-0.002	-0.207	0.075	-0.057
	T1	0.000	0.004	0.000	-0.007	-0.066	-0.003
	GR+T1	0.001	0.004	-0.002	-0.214	0.009	-0.061
A21	GR	0.000	0.000	0.000	-0.004	0.000	-0.001
	T1	0.000	0.004	0.000	0.000	0.000	0.000
	GR+T1	0.000	0.004	0.000	-0.004	0.000	-0.001
A22	GR	0.000	0.000	0.000	0.000	0.000	0.000
	T1	0.000	0.000	0.000	0.000	0.000	0.000
	GR+T1	0.000	0.000	0.000	0.000	0.000	0.000
*** Segment A end ***							
*** Segment B begin ***							
A10	GR	-0.018	-0.027	-0.014	-0.065	0.033	-0.111
	T1	0.005	-0.012	0.023	-0.011	0.049	0.028
	GR+T1	-0.013	-0.039	0.009	-0.075	0.082	-0.083
B01	GR	-0.005	0.000	-0.014	-0.065	0.033	-0.111
	T1	0.026	-0.008	0.023	-0.011	0.049	0.028
	GR+T1	0.021	-0.008	0.009	-0.075	0.082	-0.083
B02 N	GR	-0.003	0.003	-0.014	-0.065	0.033	-0.111
	T1	0.028	-0.007	0.023	-0.011	0.049	0.028
	GR+T1	0.025	-0.004	0.009	-0.075	0.082	-0.083
B02 F	GR	0.000	-0.002	-0.018	-0.065	0.033	-0.111
	T1	0.033	-0.003	0.018	-0.011	0.049	0.028
	GR+T1	0.033	-0.005	0.000	-0.075	0.082	-0.083
B03 N	GR	0.000	-0.021	-0.023	-0.065	0.033	-0.111
	T1	0.033	0.002	0.010	-0.011	0.049	0.028
	GR+T1	0.033	-0.020	-0.014	-0.075	0.082	-0.083
B03 F	GR	-0.003	-0.040	-0.027	-0.065	0.033	-0.111
	T1	0.028	0.004	0.004	-0.011	0.049	0.028
	GR+T1	0.025	-0.036	-0.022	-0.075	0.082	-0.083
B04	GR	-0.005	-0.043	-0.027	-0.065	0.033	-0.111
	T1	0.026	0.003	0.004	-0.011	0.049	0.028
	GR+T1	0.021	-0.040	-0.022	-0.075	0.082	-0.083
A11	GR	-0.018	-0.070	-0.027	-0.065	0.033	-0.111
	T1	0.005	-0.001	0.004	-0.011	0.049	0.028
	GR+T1	-0.013	-0.071	-0.022	-0.075	0.082	-0.083
*** Segment B end ***							

D I S P L A C E M E N T S

Point name	Load combination	TRANSLATIONS (in) X	Y	Z	ROTATIONS (deg) X	Y	Z
*** Segment C begin ***							
A14	GR	-0.018	-0.109	-0.041	-0.099	0.034	-0.067
	T1	0.024	0.010	-0.016	-0.010	0.043	0.025
	GR+T1	0.006	-0.099	-0.056	-0.108	0.077	-0.042
C01	GR	-0.019	-0.111	-0.041	-0.099	0.034	-0.067
	T1	0.023	0.010	-0.017	-0.010	0.043	0.025
	GR+T1	0.004	-0.102	-0.058	-0.108	0.077	-0.042
C01A	GR	-0.020	-0.115	-0.041	-0.099	0.034	-0.067
	T1	0.022	0.009	-0.020	-0.010	0.043	0.025
	GR+T1	0.001	-0.105	-0.060	-0.108	0.077	-0.042
C02 N	GR	-0.022	-0.121	-0.041	-0.099	0.034	-0.066
	T1	0.019	0.009	-0.024	-0.010	0.043	0.025
	GR+T1	-0.003	-0.112	-0.065	-0.108	0.077	-0.041
C02 M	GR	-0.023	-0.126	-0.043	-0.095	0.034	-0.065
	T1	0.016	0.010	-0.028	-0.010	0.043	0.025
	GR+T1	-0.007	-0.116	-0.071	-0.105	0.078	-0.040
C02 F	GR	-0.020	-0.128	-0.048	-0.091	0.035	-0.063
	T1	0.014	0.014	-0.030	-0.010	0.043	0.025
	GR+T1	-0.006	-0.114	-0.079	-0.101	0.079	-0.038
C03	GR	-0.020	-0.128	-0.048	-0.091	0.035	-0.063
	T1	0.014	0.014	-0.031	-0.010	0.043	0.025
	GR+T1	-0.006	-0.114	-0.079	-0.101	0.079	-0.038
C04	GR	-0.016	-0.128	-0.054	-0.089	0.035	-0.061
	T1	0.012	0.018	-0.031	-0.010	0.043	0.025
	GR+T1	-0.004	-0.110	-0.085	-0.099	0.079	-0.036
C05 N	GR	-0.013	-0.128	-0.058	-0.085	0.035	-0.059
	T1	0.011	0.022	-0.032	-0.010	0.043	0.025
	GR+T1	-0.002	-0.106	-0.089	-0.095	0.079	-0.034
C05 M	GR	-0.011	-0.127	-0.060	-0.073	0.038	-0.052
	T1	0.009	0.024	-0.031	-0.010	0.043	0.025
	GR+T1	-0.002	-0.103	-0.091	-0.083	0.082	-0.027
C05 F	GR	-0.010	-0.126	-0.060	-0.068	0.041	-0.047
	T1	0.006	0.025	-0.030	-0.010	0.043	0.025
	GR+T1	-0.004	-0.101	-0.090	-0.077	0.085	-0.022

D I S P L A C E M E N T S

Point name	Load combination	TRANSLATIONS (in) X	Y	Z	ROTATIONS (deg) X	Y	Z
C06 N	GR	-0.010	-0.126	-0.060	-0.068	0.041	-0.047
	T1	0.006	0.024	-0.030	-0.010	0.043	0.025
	GR+T1	-0.005	-0.101	-0.090	-0.077	0.085	-0.022
C06 M	GR	-0.010	-0.123	-0.058	-0.062	0.041	-0.042
	T1	0.004	0.024	-0.027	-0.010	0.043	0.025
	GR+T1	-0.006	-0.099	-0.085	-0.071	0.085	-0.017
C06 F	GR	-0.008	-0.120	-0.058	-0.052	0.041	-0.039
	T1	0.004	0.024	-0.024	-0.010	0.043	0.025
	GR+T1	-0.004	-0.097	-0.081	-0.062	0.085	-0.014
C07	GR	-0.002	-0.113	-0.058	-0.048	0.041	-0.039
	T1	0.011	0.025	-0.013	-0.010	0.043	0.025
	GR+T1	0.009	-0.088	-0.070	-0.058	0.085	-0.014
*** Segment C end ***							
A09	GR	-0.018	-0.009	-0.009	-0.065	0.033	-0.111
	T1	0.005	-0.017	0.031	-0.011	0.049	0.028
	GR+T1	-0.013	-0.026	0.022	-0.075	0.082	-0.083
1	GR	-0.005	-0.009	-0.017	-0.064	0.032	-0.111
	T1	0.002	-0.017	0.030	-0.011	0.049	0.028
	GR+T1	-0.003	-0.026	0.013	-0.075	0.082	-0.083
2	GR	-0.005	-0.028	-0.022	-0.061	0.033	-0.116
	T1	0.002	-0.012	0.022	-0.011	0.049	0.028
	GR+T1	-0.003	-0.040	0.000	-0.072	0.082	-0.087
3	GR	-0.005	-0.071	-0.035	-0.055	0.033	-0.106
	T1	0.002	-0.001	0.003	-0.011	0.049	0.028
	GR+T1	-0.003	-0.072	-0.032	-0.065	0.083	-0.078
4	GR	-0.005	-0.088	-0.040	-0.065	0.033	-0.108
	T1	0.002	0.003	-0.005	-0.011	0.049	0.028
	GR+T1	-0.003	-0.085	-0.045	-0.075	0.083	-0.080
A12	GR	-0.018	-0.088	-0.032	-0.065	0.033	-0.111
	T1	0.005	0.003	-0.004	-0.011	0.049	0.028
	GR+T1	-0.013	-0.085	-0.036	-0.075	0.082	-0.083
5	GR	0.009	-0.043	-0.035	-0.091	0.034	-0.112
	T1	0.022	0.003	0.003	-0.011	0.049	0.028
	GR+T1	0.032	-0.040	-0.032	-0.102	0.083	-0.084
6	GR	0.016	-0.021	-0.035	-0.108	0.034	-0.114
	T1	0.033	0.005	0.003	-0.012	0.049	0.028
	GR+T1	0.049	-0.016	-0.032	-0.120	0.083	-0.086

D I S P L A C E M E N T S

Point name	Load combination	TRANSLATIONS (in) X	Y	Z	ROTATIONS (deg) X	Y	Z
7	GR	0.016	0.000	-0.028	-0.097	0.034	-0.099
	T1	0.033	0.000	0.013	-0.011	0.049	0.028
	GR+T1	0.049	0.000	-0.016	-0.108	0.083	-0.070
8	GR	0.016	0.017	-0.022	-0.086	0.033	-0.083
	T1	0.033	-0.005	0.022	-0.011	0.049	0.029
	GR+T1	0.049	0.011	0.000	-0.097	0.083	-0.055
9	GR	0.009	0.000	-0.022	-0.067	0.033	-0.110
	T1	0.022	-0.008	0.022	-0.011	0.049	0.028
	GR+T1	0.031	-0.008	0.000	-0.078	0.083	-0.082
B01	GR	-0.005	0.000	-0.014	-0.065	0.033	-0.111
	T1	0.026	-0.008	0.023	-0.011	0.049	0.028
	GR+T1	0.021	-0.008	0.009	-0.075	0.082	-0.083
10	GR	-0.005	-0.030	-0.022	-0.073	0.033	-0.110
	T1	0.002	-0.012	0.022	-0.011	0.049	0.028
	GR+T1	-0.003	-0.042	0.000	-0.084	0.083	-0.082
B05	GR	-0.004	-0.043	-0.024	-0.091	0.034	-0.112
	T1	0.026	0.003	0.004	-0.011	0.049	0.028
	GR+T1	0.021	-0.040	-0.019	-0.102	0.083	-0.084

S U P P O R T F O R C E S

Point/ Supp. ID	Connect/ Type	Load Combination	LOCAL Dirn	LOCAL Force	LOCAL Deform	GLOBAL Dirn	GLOBAL Force	GLOBAL Deform
B01	9	GR	down	26	0.000	X		-0.013
B01 1	Guide		rght		0.013	Y	-26	0.000
Stiff	:RIGID		forw		0.008	Z		0.008
		T1	down	1	0.000	X		0.003
			left		0.003	Y	-1	0.000
			forw		0.001	Z		0.001
		GR+T1	down	26	0.000	X		-0.010
			rght		0.010	Y	-26	0.000
			forw		0.009	Z		0.009
B04	5	GR	down	47	0.000	X		-0.014
B04 1	Guide		left		0.014	Y	-47	0.000
Stiff	:RIGID		back		0.008	Z		0.008
		T1	down	1	0.000	X		0.003
			rght		0.003	Y	-1	0.000
			back		0.001	Z		0.001
		GR+T1	down	48	0.000	X		-0.010
			left		0.010	Y	-48	0.000
			back		0.009	Z		0.009
7		GR	down	146	0.000	X		0.016
7 1	Y - Stop		-Z		0.028	Y	-146	0.000
Stiff	:RIGID		+X		0.016	Z		-0.028
		T1	down	2	0.000	X		0.033
			+Z		0.013	Y	-2	0.000
			+X		0.033	Z		0.013
		GR+T1	down	147	0.000	X		0.049
			-Z		0.016	Y	-147	0.000
			+X		0.049	Z		-0.016

R E S T R A I N T R E A C T I O N S

Point name	Load combination	FORCES (lb) X	Y	Z	Result	MOMENTS (ft-lb) X	Y	Z	Result
A00	Anchor								
	GR	19	-424	0	424	191	54	-33	201
	T1	-82	33	-52	102	-8	-34	-2	35
	GR+T1	-63	-390	-52	399	183	20	-35	187
A22	Anchor								
	GR	-19	-531	0	532	-421	23	-112	436
	T1	82	-32	52	102	1	-20	-31	36
	GR+T1	63	-563	52	569	-420	3	-142	443
B01	Guide								
	GR	0	-26	0	26	0	0	0	0
	T1	0	-1	0	1	0	0	0	0
	GR+T1	0	-26	0	26	0	0	0	0
B04	Guide								
	GR	0	-47	0	47	0	0	0	0
	T1	0	-1	0	1	0	0	0	0
	GR+T1	0	-48	0	48	0	0	0	0
7	Y - Stop								
	GR	0	-146	0	146	0	0	0	0
	T1	0	-2	0	2	0	0	0	0
	GR+T1	0	-147	0	147	0	0	0	0

L O C A L F O R C E S & M O M E N T S

Point name	Load combination	FORCES (lb) X	Y	Z	Result	MOMENTS (ft-lb) X	Y	Z	Result
*** Segment A begin ***									
A00	GR	0	424	19	424	33	-54	191	201
	T1	52	-33	-82	102	2	34	-8	35
	GR+T1	52	390	-63	399	35	-20	183	187
A01	GR	0	282	19	283	33	-50	85	104
	T1	52	-33	-82	102	2	14	1	14
	GR+T1	52	249	-63	262	35	-36	86	100
A03	GR	0	282	19	283	33	-48	50	77
	T1	52	-33	-82	102	2	5	4	7
	GR+T1	52	249	-63	262	35	-42	54	77
A04 N	GR	0	-276	-56	282	33	50	-25	65
	T1	52	22	85	102	2	1	-6	7
	GR+T1	52	-254	30	261	35	51	-31	69
A04 M	GR	-192	-192	-55	277	53	-1	40	67
	T1	52	-21	85	102	11	19	-6	23
	GR+T1	-140	-213	30	256	64	18	33	74
A04 F	GR	-267	54	0	273	32	-66	-51	90
	T1	22	-85	-52	102	29	-4	26	39
	GR+T1	-245	-31	-52	252	61	-70	-25	96
A05 N	GR	-259	0	53	264	32	76	-66	106
	T1	22	52	-85	102	29	-65	-27	77
	GR+T1	-237	52	-32	244	61	11	-94	112
A05 M	GR	-178	178	52	258	84	50	-103	142
	T1	52	21	-85	102	-38	-97	-43	113
	GR+T1	-126	199	-33	238	46	-47	-146	160
A05 F	GR	0	250	19	251	102	-31	-189	217
	T1	52	-33	-82	102	-108	-77	-32	136
	GR+T1	52	217	-63	231	-6	-108	-221	246
A06	GR	0	243	19	244	102	-24	-280	299
	T1	52	-33	-82	102	-108	-107	-20	153
	GR+T1	52	210	-63	225	-6	-131	-300	328
A07	GR	0	239	19	239	102	-18	-360	374
	T1	52	-33	-82	102	-108	-134	-9	172
	GR+T1	52	205	-63	221	-6	-152	-369	399

L O C A L F O R C E S & M O M E N T S

Point name	Load combination	FORCES (lb) X	Y	Z	Result	MOMENTS (ft-lb) X	Y	Z	Result
A08 N	GR	0	-19	239	239	102	361	-18	376
	T1	52	82	-33	102	-108	9	-134	173
	GR+T1	52	63	205	221	-6	370	-152	400
A08 M	GR	-13	-13	235	236	354	246	-13	431
	T1	94	21	-33	102	-74	74	-150	183
	GR+T1	81	8	202	218	280	319	-163	455
A08 F	GR	-19	232	0	232	449	-11	15	450
	T1	82	-33	52	102	-4	-146	-95	174
	GR+T1	63	198	52	214	446	-156	-81	479
A09 -	GR	-19	232	0	232	449	-11	13	450
	T1	82	-33	52	102	-4	-145	-95	174
	GR+T1	63	198	52	214	446	-156	-82	479
A09 +	GR	-49	132	2	141	451	-8	19	451
	T1	81	-33	52	102	-4	-145	-95	174
	GR+T1	33	99	54	117	447	-154	-76	479
A10 -	GR	-49	132	2	141	451	-7	-83	458
	T1	81	-33	52	102	-4	-105	-69	126
	GR+T1	33	99	54	117	447	-112	-152	485
A10 +	GR	-48	201	0	207	213	-4	1	213
	T1	93	-32	43	107	-6	-70	-61	94
	GR+T1	44	169	43	180	207	-75	-61	228
A11 -	GR	-48	201	0	207	213	-4	-367	424
	T1	93	-32	43	107	-6	9	-3	11
	GR+T1	44	169	43	180	207	5	-370	424
A11 +	GR	-52	203	1	210	256	-11	-365	446
	T1	81	-31	52	101	-9	-11	-10	17
	GR+T1	29	172	53	182	247	-22	-374	449
A12 -	GR	-52	203	1	210	256	-10	-522	581
	T1	81	-31	52	101	-9	29	15	34
	GR+T1	29	172	53	182	247	19	-507	564
A12 +	GR	-19	-163	0	164	256	-10	-525	584
	T1	82	-32	52	102	-9	29	15	34
	GR+T1	63	-194	52	211	247	19	-510	568
A13	GR	-19	-174	0	175	256	-10	-364	445
	T1	82	-32	52	102	-9	79	45	91
	GR+T1	63	-206	52	221	247	69	-318	409

L O C A L F O R C E S & M O M E N T S

Point name	Load combination	FORCES (lb) X	Y	Z	Result	MOMENTS (ft-lb) X	Y	Z	Result
A13A	GR	-19	-196	0	197	256	-10	-334	421
	T1	82	-32	52	102	-9	87	50	101
	GR+T1	63	-228	52	242	247	77	-284	384
A14 -	GR	-19	-198	0	198	256	-10	-314	405
	T1	82	-32	52	102	-9	93	53	107
	GR+T1	63	-229	52	243	247	82	-261	369
A14 +	GR	-19	-283	0	284	238	-10	-294	378
	T1	82	-32	52	102	-9	93	53	107
	GR+T1	63	-315	52	326	229	82	-240	342
A15	GR	-19	-285	0	285	238	-10	-265	357
	T1	82	-32	52	102	-9	98	57	113
	GR+T1	63	-316	52	327	229	88	-209	322
A15A	GR	-19	-307	0	308	238	-10	-218	323
	T1	82	-32	52	102	-9	106	62	123
	GR+T1	63	-339	52	349	229	96	-156	294
A16 N	GR	-19	91	-301	315	238	32	-1	240
	T1	82	-40	-45	102	-9	-117	108	160
	GR+T1	63	50	-346	356	229	-86	107	267
A16 M	GR	51	78	-304	318	157	-226	-27	277
	T1	29	-86	-45	102	-94	-89	128	182
	GR+T1	81	-8	-350	359	64	-315	101	337
A16 F	GR	93	-307	-19	322	-82	-42	352	364
	T1	-40	-45	82	102	-134	154	8	204
	GR+T1	52	-353	63	362	-216	112	361	435
A17 N	GR	93	122	-286	325	-82	-372	-181	422
	T1	-40	-62	-70	102	-134	-73	154	217
	GR+T1	53	61	-357	365	-216	-445	-28	496
A17 M	GR	153	28	-290	329	-335	-285	-201	484
	T1	-71	-19	-70	102	-155	20	164	226
	GR+T1	82	10	-360	370	-490	-265	-37	558
A17 F	GR	134	-306	0	334	-465	-201	-2	506
	T1	-65	-58	-52	102	-107	184	-55	220
	GR+T1	69	-364	-52	374	-572	-17	-57	575
A18 N	GR	135	0	-307	335	-465	-22	-201	507
	T1	-65	52	-58	102	-107	50	180	215
	GR+T1	69	52	-365	375	-572	28	-21	573

L O C A L F O R C E S & M O M E N T S

Point name	Load combination	FORCES (lb) X	Y	Z	Result	MOMENTS (ft-lb) X	Y	Z	Result
A18 M	GR	96	-96	-311	340	-375	240	-188	483
	T1	-10	83	-58	102	-46	98	161	194
	GR+T1	87	-13	-370	380	-421	338	-26	540
A18 F	GR	0	-344	19	344	-126	-19	-392	412
	T1	52	-32	-82	102	31	163	-33	169
	GR+T1	52	-376	-63	384	-95	143	-425	459
A19 N	GR	0	377	-19	378	-126	-16	-294	320
	T1	52	32	82	102	31	-7	-27	42
	GR+T1	52	409	63	417	-95	-24	-321	336
A19 M	GR	270	270	-19	383	-102	73	-384	404
	T1	59	-14	82	102	25	-8	-30	39
	GR+T1	329	256	63	422	-78	65	-413	426
A19 F	GR	387	0	19	387	-23	-119	421	438
	T1	32	52	-82	102	20	4	21	29
	GR+T1	418	52	-63	426	-3	-116	442	457
A20	GR	527	0	19	527	-23	-118	421	438
	T1	32	52	-82	102	20	-2	17	26
	GR+T1	559	52	-63	565	-3	-120	438	454
A21	GR	527	0	19	527	-23	-116	421	437
	T1	32	52	-82	102	20	-10	12	25
	GR+T1	559	52	-63	565	-3	-126	433	451
A22	GR	531	0	19	532	-23	-112	421	436
	T1	32	52	-82	102	20	-31	-1	36
	GR+T1	563	52	-63	569	-3	-142	420	443
*** Segment A end ***									
*** Segment B begin ***									
A10	GR	2	-69	0	69	-84	-2	-238	253
	T1	9	-2	12	15	-8	-35	-2	36
	GR+T1	11	-70	12	72	-91	-38	-240	260
B01 -	GR	2	-69	0	69	-84	-2	-101	131
	T1	9	-2	12	15	-8	-12	1	14
	GR+T1	11	-70	12	72	-91	-14	-99	136
B01 +	GR	1	-45	4	45	-80	-2	-48	93
	T1	9	-1	12	15	-8	-12	2	15
	GR+T1	10	-46	16	49	-87	-14	-46	100

L O C A L F O R C E S & M O M E N T S

Point name	Load combination	FORCES (lb) X	Y	Z	Result	MOMENTS (ft-lb) X	Y	Z	Result
B02 N	GR	1	-4	-45	45	-80	39	-1	89
	T1	9	-12	-1	15	-8	-2	-10	13
	GR+T1	10	-16	-46	49	-87	37	-11	95
B02 F	GR	-4	-45	1	45	17	2	-57	60
	T1	-12	-1	9	15	-3	1	-7	8
	GR+T1	-16	-46	10	49	14	2	-65	66
B03 N	GR	-4	-1	-45	45	17	20	3	26
	T1	-12	-9	-1	15	-3	7	8	11
	GR+T1	-16	-10	-46	49	14	27	11	32
B03 F	GR	-1	-45	-4	45	-2	1	39	39
	T1	-9	-1	-12	15	6	7	-2	9
	GR+T1	-10	-46	-16	49	4	8	37	38
B04 -	GR	-1	-45	-4	45	-2	0	48	48
	T1	-9	-1	-12	15	6	4	-2	8
	GR+T1	-10	-46	-16	49	4	5	46	46
B04 +	GR	-1	2	-4	5	-2	0	48	48
	T1	-9	0	-12	15	6	4	-2	8
	GR+T1	-10	3	-16	19	4	5	46	46
A11	GR	-1	2	-4	5	-2	-7	44	44
	T1	-9	0	-12	15	6	-19	-3	20
	GR+T1	-10	3	-16	19	4	-27	41	49
*** Segment B end ***									
*** Segment C begin ***									
A14	GR	0	81	0	81	21	0	18	27
	T1	0	0	0	0	0	0	0	0
	GR+T1	0	81	0	81	21	0	18	27
C01	GR	0	80	0	80	21	0	10	23
	T1	0	0	0	0	0	0	0	0
	GR+T1	0	80	0	80	21	0	10	23
C01A	GR	0	57	0	57	21	0	-1	21
	T1	0	0	0	0	0	0	0	0
	GR+T1	0	57	0	57	21	0	-1	21
C02 N	GR	0	54	0	54	21	0	-17	27
	T1	0	0	0	0	0	0	0	0
	GR+T1	0	54	0	54	21	0	-17	27

L O C A L F O R C E S & M O M E N T S

Point name	Load combination	FORCES (lb) X	Y	Z	Result	MOMENTS (ft-lb) X	Y	Z	Result
C02 M	GR	36	36	0	50	15	-15	-31	37
	T1	0	0	0	0	0	0	0	0
	GR+T1	36	36	0	50	15	-15	-31	37
C02 F	GR	47	0	0	47	0	-21	-36	42
	T1	0	0	0	0	0	0	0	0
	GR+T1	47	0	0	47	0	-21	-36	42
C03	GR	47	0	0	47	0	-21	-36	42
	T1	0	0	0	0	0	0	0	0
	GR+T1	47	0	0	47	0	-21	-36	42
C04	GR	44	0	0	44	0	-21	-36	42
	T1	0	0	0	0	0	0	0	0
	GR+T1	44	0	0	44	0	-21	-36	42
C05 N	GR	43	0	0	43	0	36	-21	42
	T1	0	0	0	0	0	0	0	0
	GR+T1	43	0	0	43	0	36	-21	42
C05 M	GR	30	-30	0	42	26	26	-17	40
	T1	0	0	0	0	0	0	0	0
	GR+T1	30	-30	0	42	26	26	-17	40
C05 F	GR	0	41	0	41	36	0	10	37
	T1	0	0	0	0	0	0	0	0
	GR+T1	0	41	0	41	36	0	10	37
C06 N	GR	0	0	41	41	36	-10	0	37
	T1	0	0	0	0	0	0	0	0
	GR+T1	0	0	41	41	36	-10	0	37
C06 M	GR	0	0	40	40	21	-25	0	33
	T1	0	0	0	0	0	0	0	0
	GR+T1	0	0	40	40	21	-25	0	33
C06 F	GR	0	39	0	39	0	0	26	26
	T1	0	0	0	0	0	0	0	0
	GR+T1	0	39	0	39	0	0	26	26
C07	GR	0	35	0	35	0	0	0	0
	T1	0	0	0	0	0	0	0	0
	GR+T1	0	35	0	35	0	0	0	0
*** Segment C end ***									

B E A M F O R C E S & M O M E N T S

Beam ID	Load combination	Point name	FORCES (lb) Axial	Y-Shear	Z-Shear	MOMENTS (ft-lb) Torsion	Y-Y Mom.	Z-Z Mom.
M1	GR	A09	69	-30	-2	-2	1	-6
		1	-66	30	2	2	0	-11
	T1	A09	0	0	0	0	0	0
		1	0	0	0	0	0	0
	GR+T1	A09	69	-30	-2	-2	1	-6
		1	-66	30	2	2	0	-12
M2	GR	1	30	-2	-15	0	11	2
		2	-30	2	11	0	-1	-4
	T1	1	0	0	0	0	0	0
		2	0	0	0	0	0	0
	GR+T1	1	30	-2	-15	0	12	2
		2	-30	2	11	0	-1	-4
M3	GR	2	30	-2	-11	0	1	4
		3	-30	2	1	0	10	-7
	T1	2	0	0	0	0	0	0
		3	0	0	0	0	0	0
	GR+T1	2	30	-2	-11	0	1	4
		3	-30	2	1	0	10	-7
M4	GR	3	34	-1	32	1	-10	-1
		4	-34	1	-36	-1	-16	0
	T1	3	0	0	0	0	0	0
		4	0	0	0	0	0	0
	GR+T1	3	34	-1	32	1	-10	-1
		4	-34	1	-36	-1	-16	0
M5	GR	4	87	1	34	0	-16	1
		A12	-90	-1	-34	0	-4	0
	T1	4	0	0	0	0	0	0
		A12	0	0	0	0	0	0
	GR+T1	4	87	1	34	0	-16	1
		A12	-90	-1	-34	0	-4	0
M6	GR	3	0	4	-25	0	1	8
		5	0	-4	14	0	38	-1
	T1	3	0	0	0	0	0	0
		5	0	0	0	0	1	0
	GR+T1	3	0	4	-25	0	1	8
		5	0	-4	15	0	39	-1
M7	GR	5	0	4	36	0	-38	1
		6	0	-4	-41	0	-1	3
	T1	5	0	0	1	0	-1	0
		6	0	0	-1	0	0	0
	GR+T1	5	0	4	37	0	-39	1
		6	0	-4	-42	0	-1	3

B E A M F O R C E S & M O M E N T S

Beam ID	Load combination	Point name	FORCES (lb) Axial	Y-Shear	Z-Shear	MOMENTS (ft-lb) Torsion	Y-Y Mom.	Z-Z Mom.
M8	GR	6	4	0	41	1	0	-3
		7	-4	0	-46	-1	-40	3
	T1	6	0	0	1	0	0	0
		7	0	0	-1	0	-1	0
	GR+T1	6	4	0	42	1	0	-3
		7	-4	0	-47	-1	-41	3
M9	GR	7	4	0	-48	1	40	-3
		8	-4	0	43	-1	2	4
	T1	7	0	0	-1	0	1	0
		8	0	0	1	0	0	0
	GR+T1	7	4	0	-49	1	41	-3
		8	-4	0	44	-1	2	4
M10	GR	8	0	-4	-43	-2	-1	-4
		9	0	4	38	2	41	0
	T1	8	0	0	-1	0	0	0
		9	0	0	1	0	1	0
	GR+T1	8	0	-4	-44	-2	-1	-4
		9	0	4	39	2	42	0
M11	GR	9	0	0	-11	0	11	0
		10	0	0	0	0	0	0
	T1	9	0	0	0	0	0	0
		10	0	0	0	0	0	0
	GR+T1	9	0	0	-11	0	11	0
		10	0	0	0	0	0	0
M12	GR	5	-3	0	0	0	0	0
		B05	0	0	0	0	0	0
	T1	5	0	0	0	0	0	0
		B05	0	0	0	0	0	0
	GR+T1	5	-3	0	0	0	0	0
		B05	0	0	0	0	0	0
M13	GR	9	-2	0	-4	0	-2	-52
		B01	-2	0	4	0	4	53
	T1	9	0	0	0	0	0	-1
		B01	0	0	0	0	0	1
	GR+T1	9	-2	0	-4	0	-2	-53
		B01	-2	0	4	0	4	53

ASME B31.3c (1992) CODE COMPLIANCE

Point name	Load combination	In-Pl. Moment (Moments in ft-lb)	Out-Pl. Moment	Torsion Moment	S.I.F In	S.I.F Out	Eq. no.	Load type	Code Stress (Stress in psi)	Code Allow.
*** Segment A begin ***										
A00	Max P						(3a)	HOOP	7304	16700
	GR + Max P	191	54		1.00	1.00	(18)	SUST	4066	16700
	Cold to T1	8	34	2	1.00	1.00	(17)	DISP	130	25050
A01	Max P						(3a)	HOOP	7304	16700
	GR + Max P	85	50		1.00	1.00	(18)	SUST	3588	16700
	Cold to T1	1	14	2	1.00	1.00	(17)	DISP	51	25050
A03	Max P						(3a)	HOOP	7304	16700
	GR + Max P	50	48		1.00	1.00	(18)	SUST	3447	16700
	Cold to T1	4	5	2	1.00	1.00	(17)	DISP	26	25050
A04 N-	Max P						(3a)	HOOP	7304	16700
	GR + Max P	31	46		1.00	1.00	(18)	SUST	3383	16700
	Cold to T1	6	0	2	1.00	1.00	(17)	DISP	24	25050
A04 N+	Max P						(3a)	HOOP	7304	16700
	GR + Max P	25	50		2.56	2.13	(18)	SUST	3712	16700
	Cold to T1	6	1	2	2.56	2.13	(17)	DISP	59	25050
A04 M	Max P						(3a)	HOOP	7304	16700
	GR + Max P	40	1		2.56	2.13	(18)	SUST	3602	16700
	Cold to T1	6	19	11	2.56	2.13	(17)	DISP	168	25050
A04 F-	Max P						(3a)	HOOP	7304	16700
	GR + Max P	66	51		2.56	2.13	(18)	SUST	4081	16700
	Cold to T1	4	26	29	2.56	2.13	(17)	DISP	238	25050
A04 F+	Max P						(3a)	HOOP	7304	16700
	GR + Max P	51	66		1.00	1.00	(18)	SUST	3516	16700
	Cold to T1	26	4	29	1.00	1.00	(17)	DISP	147	25050
A05 N-	Max P						(3a)	HOOP	7304	16700
	GR + Max P	76	66		1.00	1.00	(18)	SUST	3598	16700
	Cold to T1	65	27	29	1.00	1.00	(17)	DISP	286	25050
A05 N+	Max P						(3a)	HOOP	7304	16700
	GR + Max P	66	76		1.95	1.63	(18)	SUST	3973	16700
	Cold to T1	27	65	29	1.95	1.63	(17)	DISP	457	25050
A05 M	Max P						(3a)	HOOP	7304	16700
	GR + Max P	103	50		1.95	1.63	(18)	SUST	4159	16700
	Cold to T1	43	97	38	1.95	1.63	(17)	DISP	681	25050

ASME B31.3c (1992) CODE COMPLIANCE

Point name	Load combination	In-Pl. Moment (Moments in ft-lb)	Out-Pl. Moment	Torsion Moment	S.I.F In	S.I.F Out	Eq. no.	Load type	Code Stress (Stress in psi)	Code Allow.
A05 F-	Max P						(3a)	HOOP	7304	16700
	GR + Max P	191	6		1.95	1.63	(18)	SUST	4908	16700
	Cold to T1	42	72	108	1.95	1.63	(17)	DISP	669	25050
A05 F+	Max P						(3a)	HOOP	7304	16700
	GR + Max P	189	31		1.00	1.00	(18)	SUST	4033	16700
	Cold to T1	32	77	108	1.00	1.00	(17)	DISP	509	25050
A06	Max P						(3a)	HOOP	7304	16700
	GR + Max P	280	24		1.00	1.00	(18)	SUST	4464	16700
	Cold to T1	20	107	108	1.00	1.00	(17)	DISP	573	25050
A07	Max P						(3a)	HOOP	6451	16700
	GR + Max P	360	18		1.00	1.00	(18)	SUST	6043	16700
	Cold to T1	9	134	108	1.00	1.00	(17)	DISP	1199	25050
A08 N-	Max P						(3a)	HOOP	6451	16700
	GR + Max P	361	18		1.00	1.00	(18)	SUST	6054	16700
	Cold to T1	9	134	108	1.00	1.00	(17)	DISP	1202	25050
A08 N+	Max P						(3a)	HOOP	6451	16700
	GR + Max P	18	361		1.78	1.48	(18)	SUST	7645	16700
	Cold to T1	134	9	108	1.78	1.48	(17)	DISP	1827	25050
A08 M	Max P						(3a)	HOOP	6451	16700
	GR + Max P	13	246		1.78	1.48	(18)	SUST	6081	16700
	Cold to T1	150	74	74	1.78	1.48	(17)	DISP	2074	25050
A08 F-	Max P						(3a)	HOOP	6451	16700
	GR + Max P	11	15		1.78	1.48	(18)	SUST	3010	16700
	Cold to T1	146	95	4	1.78	1.48	(17)	DISP	2052	25050
A08 F+	Max P						(3a)	HOOP	6451	16700
	GR + Max P	15	11		1.00	1.00	(18)	SUST	2913	16700
	Cold to T1	95	146	4	1.00	1.00	(17)	DISP	1212	25050
A09	Max P						(3a)	HOOP	6451	16700
	GR + Max P	13	11		1.00	1.00	(18)	SUST	2904	16700
	Cold to T1	95	145	4	1.00	1.00	(17)	DISP	1210	25050
A12	Max P						(3a)	HOOP	6451	16700
	GR + Max P	525	10		1.00	1.00	(18)	SUST	7553	16700
	Cold to T1	15	29	9	1.00	1.00	(17)	DISP	236	25050
A13	Max P						(3a)	HOOP	6451	16700
	GR + Max P	364	10		1.00	1.00	(18)	SUST	6076	16700
	Cold to T1	45	79	9	1.00	1.00	(17)	DISP	636	25050

ASME B31.3c (1992) CODE COMPLIANCE

Point name	Load combination	(Moments in ft-lb) In-Pl. Moment	Out-Pl. Moment	Torsion Moment	S.I.F In	S.I.F Out	(Stress in psi) Eq. no.	Load type	Code Stress	Code Allow.
A13A	Max P						(3a)	HOOP	6451	16700
	GR + Max P	334	10		1.00	1.00	(18)	SUST	5805	16700
	Cold to T1	50	87	9	1.00	1.00	(17)	DISP	704	25050
A14 -	Max P						(3a)	HOOP	6451	16700
	GR + Max P	10	314		1.22	1.30	(18)	SUST	6476	16700
	Cold to T1	93	53	9	1.22	1.30	(17)	DISP	925	25050
A14 +	Max P						(3a)	HOOP	6451	16700
	GR + Max P	10	294		1.22	1.30	(18)	SUST	6232	16700
	Cold to T1	93	53	9	1.22	1.30	(17)	DISP	925	25050
A15	Max P						(3a)	HOOP	6451	16700
	GR + Max P	265	10		1.00	1.00	(18)	SUST	5177	16700
	Cold to T1	57	98	9	1.00	1.00	(17)	DISP	788	25050
A15A	Max P						(3a)	HOOP	6451	16700
	GR + Max P	218	10		1.00	1.00	(18)	SUST	4744	16700
	Cold to T1	62	106	9	1.00	1.00	(17)	DISP	856	25050
A16 N-	Max P						(3a)	HOOP	6451	16700
	GR + Max P	30	10		1.00	1.00	(18)	SUST	3037	16700
	Cold to T1	81	137	9	1.00	1.00	(17)	DISP	1111	25050
A16 N+	Max P						(3a)	HOOP	6451	16700
	GR + Max P	1	32		1.78	1.48	(18)	SUST	3176	16700
	Cold to T1	108	117	9	1.78	1.48	(17)	DISP	1803	25050
A16 M	Max P						(3a)	HOOP	6451	16700
	GR + Max P	27	226		1.78	1.48	(18)	SUST	5843	16700
	Cold to T1	128	89	94	1.78	1.48	(17)	DISP	1940	25050
A16 F-	Max P						(3a)	HOOP	6451	16700
	GR + Max P	42	352		1.78	1.48	(18)	SUST	7569	16700
	Cold to T1	154	8	134	1.78	1.48	(17)	DISP	2122	25050
A16 F+	Max P						(3a)	HOOP	7304	16700
	GR + Max P	352	42		1.00	1.00	(18)	SUST	4818	16700
	Cold to T1	8	154	134	1.00	1.00	(17)	DISP	763	25050
A17 N-	Max P						(3a)	HOOP	7304	16700
	GR + Max P	411	46		1.00	1.00	(18)	SUST	5101	16700
	Cold to T1	17	170	134	1.00	1.00	(17)	DISP	809	25050
A17 N+	Max P						(3a)	HOOP	7304	16700
	GR + Max P	181	372		2.56	2.13	(18)	SUST	7524	16700
	Cold to T1	154	73	134	2.56	2.13	(17)	DISP	1658	25050

ASME B31.3c (1992) CODE COMPLIANCE

Point name	Load combination	(Moments in ft-lb) In-Pl. Moment	Out-Pl. Moment	Torsion Moment	S.I.F In	S.I.F Out	(Stress in psi) Eq. no.	Load type	Code Stress	Code Allow.
A17 M	Max P						(3a)	HOOP	7304	16700
	GR + Max P	201	285		2.56	2.13	(18)	SUST	6935	16700
	Cold to T1	164	20	155	2.56	2.13	(17)	DISP	1678	25050
A17 F-	Max P						(3a)	HOOP	7304	16700
	GR + Max P	194	52		2.56	2.13	(18)	SUST	5554	16700
	Cold to T1	162	103	107	2.56	2.13	(17)	DISP	1797	25050
A17 F+	Max P						(3a)	HOOP	7304	16700
	GR + Max P	2	201		1.00	1.00	(18)	SUST	4078	16700
	Cold to T1	55	184	107	1.00	1.00	(17)	DISP	821	25050
A18 N-	Max P						(3a)	HOOP	7304	16700
	GR + Max P	22	201		1.00	1.00	(18)	SUST	4084	16700
	Cold to T1	50	180	107	1.00	1.00	(17)	DISP	804	25050
A18 N+	Max P						(3a)	HOOP	7304	16700
	GR + Max P	201	22		2.56	2.13	(18)	SUST	5590	16700
	Cold to T1	180	50	107	2.56	2.13	(17)	DISP	1808	25050
A18 M	Max P						(3a)	HOOP	7304	16700
	GR + Max P	188	240		2.56	2.13	(18)	SUST	6482	16700
	Cold to T1	161	98	46	2.56	2.13	(17)	DISP	1733	25050
A18 F-	Max P						(3a)	HOOP	7304	16700
	GR + Max P	155	361		2.56	2.13	(18)	SUST	7270	16700
	Cold to T1	141	88	31	2.56	2.13	(17)	DISP	1520	25050
A18 F+	Max P						(3a)	HOOP	7304	16700
	GR + Max P	392	19		1.00	1.00	(18)	SUST	5000	16700
	Cold to T1	33	163	31	1.00	1.00	(17)	DISP	630	25050
A19 N-	Max P						(3a)	HOOP	7304	16700
	GR + Max P	294	16		1.00	1.00	(18)	SUST	4528	16700
	Cold to T1	27	7	31	1.00	1.00	(17)	DISP	156	25050
A19 N+	Max P						(3a)	HOOP	7304	16700
	GR + Max P	294	16		2.56	2.13	(18)	SUST	6729	16700
	Cold to T1	27	7	31	2.56	2.13	(17)	DISP	291	25050
A19 M	Max P						(3a)	HOOP	7304	16700
	GR + Max P	384	73		2.56	2.13	(18)	SUST	7883	16700
	Cold to T1	30	8	25	2.56	2.13	(17)	DISP	305	25050
A19 F-	Max P						(3a)	HOOP	7304	16700
	GR + Max P	421	119		2.56	2.13	(18)	SUST	8426	16700
	Cold to T1	21	4	20	2.56	2.13	(17)	DISP	213	25050

ASME B31.3c (1992) CODE COMPLIANCE

Point name	Load combination	(Moments in ft-lb) In-Pl. Moment	Out-Pl. Moment	Torsion Moment	S.I.F In	S.I.F Out	(Stress in psi) Eq. no.	Load type	Code Stress	Code Allow.
A19 F+	Max P						(3a)	HOOP	7304	16700
	GR + Max P	421	119		1.00	1.00	(18)	SUST	5215	16700
	Cold to T1	21	4	20	1.00	1.00	(17)	DISP	108	25050
A20	Max P						(3a)	HOOP	7304	16700
	GR + Max P	421	118		1.00	1.00	(18)	SUST	5213	16700
	Cold to T1	17	2	20	1.00	1.00	(17)	DISP	99	25050
A21	Max P						(3a)	HOOP	7304	16700
	GR + Max P	421	116		1.00	1.00	(18)	SUST	5211	16700
	Cold to T1	12	10	20	1.00	1.00	(17)	DISP	95	25050
A22	Max P						(3a)	HOOP	7304	16700
	GR + Max P	421	112		1.00	1.00	(18)	SUST	5205	16700
	Cold to T1	1	31	20	1.00	1.00	(17)	DISP	136	25050
*** Segment A end ***										
*** Segment B begin ***										
*** Segment B end ***										
*** Segment C begin ***										
A14	Max P						(3a)	HOOP	6451	16700
	GR + Max P	0	18		1.22	1.30	(18)	SUST	2952	16700
	Cold to T1	0	0	0	1.22	1.30	(17)	DISP	0	25050
C01	Max P						(3a)	HOOP	6451	16700
	GR + Max P	10	0		1.00	1.00	(18)	SUST	2839	16700
	Cold to T1	0	0	0	1.00	1.00	(17)	DISP	0	25050
C01A	Max P						(3a)	HOOP	6451	16700
	GR + Max P	1	0		1.00	1.00	(18)	SUST	2758	16700
	Cold to T1	0	0	0	1.00	1.00	(17)	DISP	0	25050
C02 N-	Max P						(3a)	HOOP	6451	16700
	GR + Max P	17	0		1.00	1.00	(18)	SUST	2903	16700
	Cold to T1	0	0	0	1.00	1.00	(17)	DISP	0	25050
C02 N+	Max P						(3a)	HOOP	6451	16700
	GR + Max P	17	0		1.78	1.48	(18)	SUST	3022	16700
	Cold to T1	0	0	0	1.78	1.48	(17)	DISP	0	25050
C02 M	Max P						(3a)	HOOP	6451	16700
	GR + Max P	31	15		1.78	1.48	(18)	SUST	3285	16700
	Cold to T1	0	0	0	1.78	1.48	(17)	DISP	0	25050

ASME B31.3c (1992) CODE COMPLIANCE

Point name	Load combination	(Moments in ft-lb) In-Pl. Moment	Out-Pl. Moment	Torsion Moment	S.I.F In	S.I.F Out	(Stress in psi) Eq. no.	Load type	Code Stress	Code Allow.
C02 F-	Max P						(3a)	HOOP	6451	16700
	GR + Max P	36	21		1.78	1.48	(18)	SUST	3398	16700
	Cold to T1	0	0	0	1.78	1.48	(17)	DISP	0	25050
C02 F+	Max P						(3a)	HOOP	6451	16700
	GR + Max P	36	21		1.00	1.00	(18)	SUST	3129	16700
	Cold to T1	0	0	0	1.00	1.00	(17)	DISP	0	25050
C03	Max P						(3a)	HOOP	6451	16700
	GR + Max P	36	21		1.00	1.00	(18)	SUST	3129	16700
	Cold to T1	0	0	0	1.00	1.00	(17)	DISP	0	25050
C04	Max P						(3a)	HOOP	7562	16700
	GR + Max P	36	21		1.00	1.00	(18)	SUST	4444	16700
	Cold to T1	0	0	0	1.00	1.00	(17)	DISP	0	25050
C05 N-	Max P						(3a)	HOOP	7562	16700
	GR + Max P	36	21		1.00	1.00	(18)	SUST	4444	16700
	Cold to T1	0	0	0	1.00	1.00	(17)	DISP	0	25050
C05 N+	Max P						(3a)	HOOP	7562	16700
	GR + Max P	21	36		1.73	1.44	(18)	SUST	5145	16700
	Cold to T1	0	0	0	1.73	1.44	(17)	DISP	0	25050
C05 M	Max P						(3a)	HOOP	7562	16700
	GR + Max P	17	26		1.73	1.44	(18)	SUST	4643	16700
	Cold to T1	0	0	0	1.73	1.44	(17)	DISP	0	25050
C05 F-	Max P						(3a)	HOOP	7562	16700
	GR + Max P	10	0		1.73	1.44	(18)	SUST	3664	16700
	Cold to T1	0	0	0	1.73	1.44	(17)	DISP	0	25050
C05 F+	Max P						(3a)	HOOP	7562	16700
	GR + Max P	10	0		1.00	1.00	(18)	SUST	3424	16700
	Cold to T1	0	0	0	1.00	1.00	(17)	DISP	0	25050
C06 N-	Max P						(3a)	HOOP	7562	16700
	GR + Max P	10	0		1.00	1.00	(18)	SUST	3421	16700
	Cold to T1	0	0	0	1.00	1.00	(17)	DISP	0	25050
C06 N+	Max P						(3a)	HOOP	7562	16700
	GR + Max P	0	10		1.73	1.44	(18)	SUST	3572	16700
	Cold to T1	0	0	0	1.73	1.44	(17)	DISP	0	25050
C06 M	Max P						(3a)	HOOP	7562	16700
	GR + Max P	0	25		1.73	1.44	(18)	SUST	4287	16700
	Cold to T1	0	0	0	1.73	1.44	(17)	DISP	0	25050

ASME B31.3c (1992) CODE COMPLIANCE

Point name	Load combination	(Moments in ft-lb) In-Pl. Moment	Out-Pl. Moment	Torsion Moment	S.I.F In	S.I.F Out	Eq. no.	(Stress in psi) Load type	Code Stress	Code Allow.
C06 F-	Max P						(3a)	HOOP	7562	16700
	GR + Max P	0	26		1.73	1.44	(18)	SUST	4324	16700
	Cold to T1	0	0	0	1.73	1.44	(17)	DISP	0	25050
C06 F+	Max P						(3a)	HOOP	7562	16700
	GR + Max P	26	0		1.00	1.00	(18)	SUST	3947	16700
	Cold to T1	0	0	0	1.00	1.00	(17)	DISP	0	25050
C07	Max P						(3a)	HOOP	7562	16700
	GR + Max P	0	0		1.00	1.00	(18)	SUST	3095	16700
	Cold to T1	0	0	0	1.00	1.00	(17)	DISP	0	25050

*** Segment C end ***

S Y S T E M S U M M A R Y

Maximum displacements (in)

Maximum X :	0.049	Point : 8	Load Comb.: GR+T1
Maximum Y :	-0.150	Point : A17 F	Load Comb.: GR
Maximum Z :	-0.091	Point : C05 M	Load Comb.: GR+T1
Max. total:	0.160	Point : A17 F	Load Comb.: GR+T1

Maximum rotations (deg)

Maximum X :	-0.282	Point : A19 N	Load Comb.: GR+T1
Maximum Y :	0.085	Point : C05 F	Load Comb.: GR+T1
Maximum Z :	-0.126	Point : A08 N	Load Comb.: GR
Max. total:	0.291	Point : A19 N	Load Comb.: GR+T1

Maximum restraint forces(lb)

Maximum X :	-82	Point : A00	Load Comb.: T1
Maximum Y :	-563	Point : A22	Load Comb.: GR+T1
Maximum Z :	52	Point : A22	Load Comb.: GR+T1
Max. total:	569	Point : A22	Load Comb.: GR+T1

Maximum restraint moments(ft-lb)

Maximum X :	-421	Point : A22	Load Comb.: GR
Maximum Y :	54	Point : A00	Load Comb.: GR
Maximum Z :	-142	Point : A22	Load Comb.: GR+T1
Max. total:	443	Point : A22	Load Comb.: GR+T1

1C214-PRINT

SYSTEM SUMMARY

Maximum pipe forces (lb)

Maximum X :	563	Point : A22	Load Comb.: GR+T1
Maximum Y :	424	Point : A00	Load Comb.: GR
Maximum Z :	-370	Point : A18 M	Load Comb.: GR+T1
Max. total:	569	Point : A22	Load Comb.: GR+T1

Maximum pipe moments (ft-lb)

Maximum X :	-572	Point : A17 F	Load Comb.: GR+T1
Maximum Y :	-445	Point : A17 N	Load Comb.: GR+T1
Maximum Z :	-525	Point : A12	Load Comb.: GR
Max. total:	584	Point : A12	Load Comb.: GR

SYSTEM SUMMARY

Maximum sustained stress

Point : A19 F
Stress psi : 8426
Allowable psi : 16700
Ratio : 0.50
Load combination : GR + Max P

Maximum displacement stress

Point : A16 F
Stress psi : 2122
Allowable psi : 25050
Ratio : 0.08
Load combination : Cold to T1

Maximum hoop stress

Point : C04
Stress psi : 7562
Allowable psi : 16700
Ratio : 0.45
Load combination : Max P

Maximum sustained stress ratio

Point : A19 F
Stress psi : 8426
Allowable psi : 16700
Ratio : 0.50
Load combination : GR + Max P

Maximum displacement stress ratio

Point : A16 F
Stress psi : 2122
Allowable psi : 25050
Ratio : 0.08
Load combination : Cold to T1

Maximum hoop stress ratio

Point : C04
Stress psi : 7562
Allowable psi : 16700
Ratio : 0.45
Load combination : Max P

1C71-PRINT

S Y S T E M S U M M A R Y

```
* * * The system satisfies ASME B31.3 code requirements * * *
* * * for the selected options                            * * *
```

POINT DATA LISTING

POINT NAME	TYPE	OFFSETS (ft) X	Y	Z	PIPE ID	DESCRIPTION
*** SEGMENT A						
A00	Run	0	0	0	4"PIPE	
A01	Flex	0	0	0.25		Wt= 137 lb , Ar= 3.2 sq.in Axial= 23300000 Tors= 304.0 Y-Shear= RIGID Bend= 2080.0 Z-Shear= RIGID Bend= 2080.0
A03	Run	0	0	0.10		
A04	Bend	0	0	0.40		Short Elbow, Radius = 4.00 inch Bend angle change = 90.00 deg Mid point at 50.00 percent SIF - In 2.56, Out = 2.13 Flex = 7.908
A05	Bend	-0.17	-1.28	0		Long Elbow, Radius = 6.00 inch Bend angle change = 90.00 deg Mid point at 50.00 percent SIF - In 1.95, Out = 1.63 Flex = 5.272
A06	Redu	0	0	0.87		
A07	Run	0	0	0.33	3"PIPE	
A08	Bend	0	0	0.38		Long Elbow, Radius = 4.50 inch Bend angle change = 90.00 deg Mid point at 50.00 percent SIF - In 1.78, Out = 1.48 Flex = 4.577
A09	Run	0.38	0	0	RIGID	
A10	Tee	0.77	0	0		
A11	Tee	1.83	0	0		
A12	Run	0.77	0	0	3"PIPE	
A13	Valv	0.96	0	0		Rating = 300, Weight = 22 lb Surface factor = 4.40, SIF = 1.00
A13A	Run	0.16	0	0		
A14	Tee	0.10	0	0		
A15	Valv	0.10	0	0		Rating = 300, Weight = 22 lb Surface factor = 4.40, SIF = 1.00
A15A	Run	0.16	0	0		
A16	Bend	0.98	0	0		Long Elbow, Radius = 4.50 inch Bend angle change = 90.00 deg Mid point at 50.00 percent SIF - In 1.78, Out = 1.48 Flex = 4.577
A16 F Far					4"PIPE	
A17	Bend	0	-0.25	-0.83		Short Elbow, Radius = 4.00 inch

POINT DATA LISTING

POINT NAME	TYPE	OFFSETS (ft) X	Y	Z	PIPE ID	DESCRIPTION
						Bend angle change = 84.21 deg Mid point at 50.00 percent SIF - In 2.56, Out = 2.13 Flex = 7.908
A18	Bend	-0.67	-0.25	0		Short Elbow, Radius = 4.00 inch Bend angle change = 90.00 deg Mid point at 50.00 percent SIF - In 2.56, Out = 2.13 Flex = 7.908
A19	Bend	0	0	2.57		Short Elbow, Radius = 4.00 inch Bend angle change = 90.00 deg Mid point at 50.00 percent SIF - In 2.56, Out = 2.13 Flex = 7.908
A20	Flex	0	-0.40	0		Wt= 139 lb , Ar= 3.2 sq.in Axial= 23300000 Tors= 304.0 Y-Shear= RIGID Bend= 2080.0 Z-Shear= RIGID Bend= 2080.0
A21	Run	0	-0.10	0		
A22	Run	0	-0.25	0		
*** SEGMENT B						
A10	Tee	0.98	-1.28	2.33	RIGID	
B01	Run	0	0	2.00		
B02	Bend	0	0	0.71		Elbow, Radius = 6.00 inch Bend angle change = 90.00 deg SIF - In 1.00, Out = 1.00 Flex = 1.000
B03	Bend	1.83	0	0		Elbow, Radius = 6.00 inch Bend angle change = 90.00 deg SIF - In 1.00, Out = 1.00 Flex = 1.000
B04	Run	0	0	-0.71		
A11	Tee	0	0	-2.00		
*** SEGMENT C						
A14	Tee	4.80	-1.28	2.33	3"PIPE	
C01	Valv	0	0	-0.10		Rating = 300, Weight = 22 lb Surface factor = 4.40, SIF = 1.00
C01A	Run	0	0	-0.16		
C02	Bend	0	0	-0.66		Long Elbow, Radius = 4.50 inch Bend angle change = 90.00 deg

1CV1-SPRINT

POINT DATA LISTING

POINT NAME	TYPE	OFFSETS (ft) X	Y	Z	PIPE ID	DESCRIPTION
						Mid point at 50.00 percent SIF - In 1.78, Out = 1.48 Flex = 4.577
C03	Redu	0	0.38	0		
C04	Run	0	0.29	0	2"-PIPE	
C05	Bend	0	0.48	0		Long Elbow, Radius = 3.00 inch Bend angle change = 90.00 deg Mid point at 50.00 percent SIF - In 1.73, Out = 1.44 Flex = 4.404
C06	Bend	-0.50	0	0		Long Elbow, Radius = 3.00 inch Bend angle change = 90.00 deg Mid point at 50.00 percent SIF - In 1.73, Out = 1.44 Flex = 4.404
C07	Run	0	0	0.96		

Total weight of empty pipes : 132 lb

COMPONENT DATA LISTING

POINT NAME	COORDINATE(ft) X	Y	Z	DATA TYPE	DESCRIPTION
*** SEGMENT A					
A00	0.00	0.00	0.00	ANCHOR	Rigid Thermal movements : None
A01	0.00	0.00	0.25		
A03	0.00	0.00	0.35		
A04 N	0.00	0.00	0.42		
A04	0.00	0.00	0.75	TI	
A04 M	-0.01	-0.10	0.65		
A04 F	-0.04	-0.33	0.75		
A05 N	-0.10	-0.78	0.75		
A05	-0.17	-1.28	0.75	TI	
A05 M	-0.15	-1.13	0.90		
A05 F	-0.17	-1.28	1.25		
A06	-0.17	-1.28	1.62		
A07	-0.17	-1.28	1.95		
A08 N	-0.17	-1.28	1.95		
A08	-0.17	-1.28	2.33	TI	
A08 M	-0.06	-1.28	2.22		
A08 F	0.21	-1.28	2.33		
A09	0.21	-1.28	2.33	FLANGE	Weld neck SIF = 1.00 Rating = 300, Weight = 15 lb
				FLANGE	Weld neck SIF = 1.00 Rating = 300, Weight = 15 lb
A10	0.98	-1.28	2.33	TEE	B16.9 welding tee SIF - In = 1.00, Out = 1.00
A11	2.81	-1.28	2.33	TEE	B16.9 welding tee SIF - In = 1.00, Out = 1.00
A12	3.58	-1.28	2.33	FLANGE	Weld neck SIF = 1.00 Rating = 300, Weight = 138 lb
				FLANGE	Weld neck SIF = 1.00 Rating = 300, Weight = 138 lb
A13	4.54	-1.28	2.33		
A13A	4.70	-1.28	2.33		
A14	4.80	-1.28	2.33	TEE	B16.9 welding tee SIF - In = 1.22, Out = 1.30
				WEIGHT	5 lb , No offsets
A15	4.90	-1.28	2.33		
A15A	5.06	-1.28	2.33		
A16 N	5.66	-1.28	2.33		
A16	6.04	-1.28	2.33	TI	
A16 M	5.93	-1.31	2.22		
A16 F	6.04	-1.39	1.97		
A17 N	6.04	-1.44	1.79		
A17	6.04	-1.53	1.50	TI	
A17 M	5.96	-1.54	1.58		
A17 F	5.76	-1.64	1.50		
A18 N	5.68	-1.66	1.50		
A18	5.37	-1.78	1.50	TI	
A18 M	5.46	-1.75	1.60		

C O M P O N E N T D A T A L I S T I N G

POINT NAME	---COORDINATE(ft X	Y	Z)---	DATA TYPE	DESCRIPTION
A18 F	5.37	-1.78	1.83		
A19 N	5.37	-1.78	3.74		
A19	5.37	-1.78	4.07	TI	
A19 M	5.37	-1.88	3.97		
A19 F	5.37	-2.11	4.07		
A20	5.37	-2.18	4.07		
A21	5.37	-2.28	4.07		
A22	5.37	-2.53	4.07	ANCHOR	Rigid Thermal movements : None
*** SEGMENT B					
A10	0.98	-1.28	2.33	TEE	B16.9 welding tee SIF - In = 1.00, Out = 1.00
B01	0.98	-1.28	4.33	GUIDE	ID : B01 1, Connected to 9 Stiffness = RIGID Gap-down = 0.00, Above = 0.06 inch Gap-left = 0.06, Right = 0.06 inch Friction = 0.30 Gaps set Weightless
B02 N	0.98	-1.28	4.54		
B02	0.98	-1.28	5.04	TI	
B02 F	1.48	-1.28	5.04		
B03 N	2.31	-1.28	5.04		
B03	2.81	-1.28	5.04	TI	
B03 F	2.81	-1.28	4.54		
B04	2.81	-1.28	4.33	GUIDE	ID : B04 1, Connected to 5 Stiffness = RIGID Gap-down = 0.00, Above = 0.06 inch Gap-left = 0.06, Right = 0.06 inch Friction = 0.30 Gaps set Weightless
A11	2.81	-1.28	2.33	TEE	B16.9 welding tee SIF - In = 1.00, Out = 1.00
*** SEGMENT C					
A14	4.80	-1.28	2.33	TEE	B16.9 welding tee SIF - In = 1.22, Out = 1.30
C01	4.80	-1.28	2.23		
C01A	4.80	-1.28	2.07		
C02 N	4.80	-1.28	1.78		
C02	4.80	-1.28	1.41	TI	
C02 M	4.80	-1.17	1.52		
C02 F	4.80	-0.90	1.41		
C03	4.80	-0.90	1.41		
C04	4.80	-0.61	1.41		
C05 N	4.80	-0.38	1.41		
C05	4.80	-0.13	1.41	TI	
C05 M	4.73	-0.20	1.41		
C05 F	4.55	-0.13	1.41		

C O M P O N E N T D A T A L I S T I N G

POINT NAME	---COORDINATE(ft X	Y	Z)---	DATA TYPE	DESCRIPTION
C06 N	4.55	-0.13	1.41		
C06	4.30	-0.13	1.41	TI	
C06 M	4.37	-0.13	1.48		
C06 F	4.30	-0.13	1.66		
C07	4.30	-0.13	2.37	WEIGHT 35 lb	, No offsets

Number of points in the system : 73

P I P E D A T A L I S T I N G

Pipe ID/ Material	Nom/ Sch	O.D. inch	Thickness(inch) W.Th.	Corr	Mill	Insu	Ling	Spec Grav	Weight(lb/ft) Pipe	Other	Total
4"PIPE A312-TP304L	4 STD	4.500	0.237	0.06	0.03	0	0	1.20	11.04	0	17.66
3"PIPE A312-TP304L	3.000 STD	3.500	0.216	0.06	0.03	0	0	1.20	7.75	0	11.60
2"-PIPE A312-TP304L	2.000 STD	2.375	0.154	0.06	0.02	0	0	1.20	3.74	0	5.48

M A T E R I A L D A T A L I S T I N G

Material Name	Pipe ID	Density lb/cu.ft	Pois. Ratio	Temper. deg F	Modulus E6 psi	Expans. in/100ft	Allow. psi
A312-TP304L	4"PIPE	501.0	0.30	40.0	28.42		16700.0
				180.0		1.5442	16700.0
A312-TP304L	3"PIPE	501.0	0.30	40.0	28.42		16700.0
				180.0		1.5442	16700.0
A312-TP304L	2"-PIPE	501.0	0.30	40.0	28.42		16700.0
				180.0		1.5442	16700.0

FRAME POINT DATA LISTING

POINT NAME	---COORDINATE(ft X	Y	Z)---	DATA TYPE	DESCRIPTION
A09	0.21	-1.28	2.33		
1	0.21	-0.70	2.33	WEIGHT 51 lb	, No offsets
2	0.98	-0.70	2.33		
3	2.81	-0.70	2.33	WEIGHT 8 lb	, No offsets
4	3.58	-0.70	2.33	WEIGHT 51 lb	, No offsets
A12	3.58	-1.28	2.33		
5	2.81	-0.70	4.33		
6	2.81	-0.70	5.33		
7	1.89	-0.70	5.33	WEIGHT 51 lb	, No offsets
8	0.98	-0.70	5.33		
9	0.98	-0.70	4.33		
B01	0.98	-1.28	4.33		
10	0.98	-0.70	2.33		
B05	2.81	-1.28	4.33		

BEAM DATA LISTING

BEAM ID		POINT NAME	LENGTH (ft)	SECTION ID/ MATERIAL ID	BETA ANGLE	RIGID END(ft)	RELEASE Ax	Y-Y	Z-Z
M1	From	A09	0.58	C4X5.4	0.00	0.00	N	N	N
	To	1		A36		0.00	N	N	N
M2	From	1	0.77	C4X5.4	90.00	0.00	N	N	N
	To	2		A36		0.00	N	N	N
M3	From	2	1.83	C4X5.4	90.00	0.00	N	N	N
	To	3		A36		0.00	N	N	N
M4	From	3	0.77	C4X5.4	90.00	0.00	N	N	N
	To	4		A36		0.00	N	N	N
M5	From	4	0.58	C4X5.4	90.00	0.00	N	N	N
	To	A12		A36		0.00	N	N	N
M6	From	3	2.00	C4X5.4	90.00	0.00	N	N	N
	To	5		A36		0.00	N	N	N
M7	From	5	1.00	C4X5.4	90.00	0.00	N	N	N
	To	6		A36		0.00	N	N	N
M8	From	6	0.92	C4X5.4	90.00	0.00	N	N	N
	To	7		A36		0.00	N	N	N
M9	From	7	0.91	C4X5.4	90.00	0.00	N	N	N
	To	8		A36		0.00	N	N	N
M10	From	8	1.00	C4X5.4	90.00	0.00	N	N	N
	To	9		A36		0.00	N	N	N
M11	From	9	2.00	C4X5.4	90.00	0.00	N	N	N
	To	10		A36		0.00	N	N	N
M12	From	5	0.58	C4X5.4	90.00	0.00	N	N	N
	To	B05		A36		0.00	N	N	N
M13	From	9	0.58	C4X5.4	90.00	0.00	N	N	N
	To	B01		A36		0.00	N	N	N

CROSS SECTION LISTING

Section ID	Area(sq.in)			Inertia (in**4)		
ID	Axial	Y-Shear	Z-Shear	Torsion	Y-Y Bend	Z-Z Bend
C4X5.4	1.59	0.74	0.62	0.0	0.3	3.8

BEAM MATERIAL LISTING

MATERIAL ID	Elastic modulus E6 psi	Poissons ratio	Yield Stress psi	Density lb/cu.ft	Expansion E-6 /F	Ultimate stress psi
A36	29.000	0.250	36000	490.00	6.50000	58000

TEMPERATURE AND PRESSURE DATA

POINT NAME	-----CASE 1----- PRESS. psi	TEMPER deg F	EXPAN. in/100ft	-----CASE 2----- PRESS. psi	TEMPER deg F	EXPAN. in/100ft	-----CASE 3----- PRESS. psi	TEMPER deg F	EXPAN. in/100ft
*** SEGMENT A									
A00	325	180	1.544						
A07	325	180	1.544						
A09	325	180	0.000						
A12	325	180	1.544						
A16 F	325	180	1.544						
A22	325	180	1.544						
*** SEGMENT B									
A10	325	180	0.000						
A11	325	180	0.000						
*** SEGMENT C									
A14	325	180	1.544						
C04	325	180	1.544						
C07	325	180	1.544						

A N A L Y S I S S U M M A R Y

Current model revision number : 2

Modal - Date and Time of analysis ..... Mar 12, 1997 9:52 AM
Model Revision Number 2
Number of modes 7
Cutoff frequency (Hz) 33.0
Weight of contents included ..... Yes
Pressure stiffening case 0
Water elevation for buoyancy loads .... Not considered

Response - Date and Time of analysis ..... Mar 12, 1997 9:53 AM
Model Revision Number 2
Number of load cases 3
Load cases analyzed R1 R2 R3
Date and time of modal analysis ..... Mar 12, 1997 9:52 AM
Number of modes 7
Cutoff frequency (Hz) 33.0
Model revision of modal analysis 2
Weight of contents included ..... Yes
Pressure stiffening case 0
Water elevation for buoyancy loads .... Not considered

CODE COMPLIANCE COMBINATIONS

Combination	Category	Method	Load	Factor	Allowable	Remarks
Sus. + R1	Occasion	Abs sum	Response 1	1.00	Automatic	Default
			Max Sus	1.00		
Sus. + R2	Occasion	Abs sum	Response 2	1.00	Automatic	Default
			Max Sus	1.00		
Sus. + R3	Occasion	Abs sum	Response 3	1.00	Automatic	Default
			Max Sus	1.00		

OTHER USER COMBINATIONS

Combination	Method	Load	Factor	Remarks
R1	Sum	Response 1	1.00	Default
R2	Sum	Response 2	1.00	Default
R3	Sum	Response 3	1.00	Default
RESPONSE	SRSS	Response 1	1.00	User
		Response 2	1.00	
		Response 3	1.00	

CODE COMPLIANCE

Y - Factor 0.40
Weld efficiency factor 1.00
Range reduction factor 1.00
Design Pressure Factor 1.00
Minimum stress ratio used in reports... 0.00
Include corrosion in stress calcs. .... Y
Include torsion in code stress ..... N
Include axial force in code stress .... N
Longitudinal pressure calculation PD/4t
Include rigorous pressure ..... Not analyzed

RESPONSE SPECTRUM LOAD CASES :

Number of load cases analysed : 3

Load case 1 - R1

Missing mass : Yes
ZPA : No

Combination method : SRSS

X- Spectrum : SC1
Multiplier : 1.00

SC1

Freq(Hz)	Grav( )	Freq(Hz)	Grav( )	Freq(Hz)	Grav( )
0.100	0.01	0.160	0.03	0.250	0.06
0.400	0.10	0.600	0.16	1.100	0.28
1.640	0.42	8.000	0.42	12.000	0.34
20.000	0.26	33.000	0.20	100.000	0.20

Load case 2 - R2

Missing mass : Yes
ZPA : No

Combination method : SRSS

Y- Spectrum : SC1
Multiplier : 1.00

SC1

Freq(Hz)	Grav( )	Freq(Hz)	Grav( )	Freq(Hz)	Grav( )
0.100	0.01	0.160	0.03	0.250	0.06
0.400	0.10	0.600	0.16	1.100	0.28
1.640	0.42	8.000	0.42	12.000	0.34
20.000	0.26	33.000	0.20	100.000	0.20

Load case 3 - R3

Missing mass : Yes
ZPA : No

Combination method : SRSS

Z- Spectrum : SC1
Multiplier : 1.00

SC1

Freq(Hz)	Grav( )	Freq(Hz)	Grav( )	Freq(Hz)	Grav( )
0.100	0.01	0.160	0.03	0.250	0.06
0.400	0.10	0.600	0.16	1.100	0.28
1.640	0.42	8.000	0.42	12.000	0.34
20.000	0.26	33.000	0.20	100.000	0.20

1C/1APRINT

F R E Q U E N C I E S

Mode Number	Frequency (Rads/sec)	Frequency (Hertz)	Period (Sec)	Participation factors X	Y	Z
1	48.5389	7.7252	0.129	0.484	1.076	0.195
2	54.6772	8.7021	0.115	1.292	-0.231	0.123
3	68.3506	10.8783	0.092	0.340	-0.688	-0.621
4	133.5456	21.2544	0.047	0.033	0.301	-1.046
5	171.4149	27.2815	0.037	0.027	-0.092	0.352
6	178.9405	28.4793	0.035	-0.041	0.068	0.088
7	202.7504	32.2687	0.031	0.026	-0.300	0.323

D I S P L A C E M E N T S

Point name	Load combination	TRANSLATIONS (in) X	Y	Z	ROTATIONS (deg) X	Y	Z
*** Segment A begin ***							
A00	R1	0.000	0.000	0.000	0.000	0.000	0.000
	R2	0.000	0.000	0.000	0.000	0.000	0.000
	R3	0.000	0.000	0.000	0.000	0.000	0.000
	RESPONSE	0.000	0.000	0.000	0.000	0.000	0.000
A01	R1	0.000	0.000	0.000	0.001	0.002	0.000
	R2	0.000	0.000	0.000	0.002	0.001	0.000
	R3	0.000	0.000	0.000	0.000	0.000	0.000
	RESPONSE	0.000	0.000	0.000	0.002	0.002	0.000
A03	R1	0.001	0.000	0.000	0.043	0.058	0.086
	R2	0.000	0.001	0.000	0.079	0.035	0.021
	R3	0.000	0.000	0.000	0.018	0.014	0.015
	RESPONSE	0.001	0.001	0.000	0.091	0.069	0.090
A04 N	R1	0.002	0.001	0.000	0.043	0.058	0.087
	R2	0.001	0.002	0.000	0.079	0.035	0.021
	R3	0.000	0.000	0.000	0.018	0.014	0.015
	RESPONSE	0.002	0.002	0.000	0.092	0.069	0.090
A04 M	R1	0.006	0.004	0.001	0.049	0.064	0.088
	R2	0.003	0.006	0.002	0.091	0.039	0.021
	R3	0.001	0.001	0.000	0.020	0.015	0.015
	RESPONSE	0.007	0.007	0.002	0.105	0.076	0.092
A04 F	R1	0.012	0.005	0.003	0.055	0.064	0.088
	R2	0.004	0.008	0.007	0.102	0.041	0.021
	R3	0.001	0.002	0.002	0.023	0.016	0.015
	RESPONSE	0.013	0.010	0.008	0.118	0.078	0.092
A05 N	R1	0.020	0.006	0.008	0.057	0.065	0.087
	R2	0.005	0.008	0.017	0.104	0.042	0.021
	R3	0.002	0.002	0.004	0.023	0.016	0.015
	RESPONSE	0.021	0.010	0.019	0.120	0.079	0.091
A05 M	R1	0.028	0.008	0.013	0.063	0.062	0.076
	R2	0.007	0.011	0.025	0.112	0.042	0.021
	R3	0.003	0.003	0.006	0.024	0.016	0.016
	RESPONSE	0.029	0.014	0.029	0.130	0.077	0.081
A05 F	R1	0.035	0.013	0.015	0.069	0.055	0.070
	R2	0.010	0.020	0.029	0.118	0.042	0.021
	R3	0.004	0.004	0.006	0.025	0.016	0.017
	RESPONSE	0.036	0.024	0.033	0.139	0.071	0.075

D I S P L A C E M E N T S

Point name	Load combination	TRANSLATIONS (in) X	Y	Z	ROTATIONS (deg) X	Y	Z
A06	R1	0.039	0.018	0.015	0.070	0.054	0.066
	R2	0.013	0.029	0.029	0.119	0.041	0.021
	R3	0.004	0.006	0.006	0.025	0.016	0.017
	RESPONSE	0.041	0.035	0.033	0.140	0.070	0.071
A07	R1	0.042	0.023	0.015	0.070	0.051	0.060
	R2	0.015	0.037	0.029	0.119	0.041	0.022
	R3	0.005	0.008	0.006	0.026	0.015	0.018
	RESPONSE	0.045	0.045	0.033	0.141	0.067	0.067
A08 N	R1	0.042	0.023	0.015	0.070	0.051	0.060
	R2	0.015	0.038	0.029	0.119	0.041	0.022
	R3	0.005	0.008	0.006	0.026	0.015	0.018
	RESPONSE	0.045	0.045	0.033	0.141	0.067	0.067
A08 M	R1	0.044	0.027	0.015	0.078	0.024	0.048
	R2	0.017	0.044	0.028	0.119	0.033	0.022
	R3	0.005	0.009	0.006	0.029	0.013	0.018
	RESPONSE	0.048	0.052	0.032	0.146	0.043	0.055
A08 F	R1	0.045	0.027	0.014	0.084	0.017	0.025
	R2	0.018	0.046	0.027	0.118	0.026	0.027
	R3	0.006	0.009	0.006	0.032	0.010	0.018
	RESPONSE	0.049	0.054	0.031	0.148	0.032	0.041
A09	R1	0.045	0.027	0.014	0.084	0.017	0.025
	R2	0.018	0.046	0.027	0.118	0.026	0.027
	R3	0.006	0.009	0.006	0.032	0.010	0.018
	RESPONSE	0.049	0.054	0.031	0.148	0.032	0.041
A10	R1	0.045	0.024	0.012	0.084	0.017	0.025
	R2	0.018	0.043	0.023	0.118	0.026	0.027
	R3	0.006	0.008	0.005	0.032	0.010	0.018
	RESPONSE	0.049	0.049	0.026	0.148	0.032	0.041
A11	R1	0.045	0.017	0.007	0.084	0.017	0.025
	R2	0.018	0.036	0.015	0.118	0.026	0.027
	R3	0.006	0.009	0.006	0.032	0.010	0.018
	RESPONSE	0.049	0.041	0.017	0.148	0.032	0.041
A12	R1	0.045	0.016	0.006	0.084	0.017	0.025
	R2	0.018	0.034	0.012	0.118	0.026	0.027
	R3	0.006	0.011	0.007	0.032	0.010	0.018
	RESPONSE	0.049	0.039	0.015	0.148	0.032	0.041
A13	R1	0.045	0.014	0.007	0.074	0.028	0.025
	R2	0.018	0.030	0.010	0.099	0.021	0.038
	R3	0.006	0.014	0.007	0.033	0.009	0.018
	RESPONSE	0.049	0.036	0.014	0.128	0.036	0.049

D I S P L A C E M E N T S

Point name	Load combination	TRANSLATIONS (in) X	Y	Z	ROTATIONS (deg) X	Y	Z
A13A	R1	0.045	0.014	0.008	0.074	0.028	0.025
	R2	0.018	0.030	0.009	0.099	0.021	0.038
	R3	0.006	0.014	0.007	0.033	0.009	0.018
	RESPONSE	0.049	0.036	0.014	0.128	0.036	0.049
A14	R1	0.045	0.014	0.008	0.072	0.029	0.025
	R2	0.018	0.029	0.009	0.097	0.020	0.039
	R3	0.006	0.014	0.007	0.034	0.009	0.017
	RESPONSE	0.049	0.035	0.014	0.126	0.037	0.049
A15	R1	0.045	0.014	0.009	0.071	0.030	0.025
	R2	0.018	0.029	0.009	0.095	0.020	0.039
	R3	0.006	0.015	0.007	0.034	0.010	0.017
	RESPONSE	0.049	0.035	0.015	0.124	0.037	0.050
A15A	R1	0.045	0.014	0.010	0.071	0.030	0.025
	R2	0.018	0.028	0.009	0.095	0.020	0.039
	R3	0.006	0.015	0.007	0.034	0.010	0.017
	RESPONSE	0.049	0.035	0.015	0.124	0.037	0.050
A16 N	R1	0.045	0.014	0.013	0.064	0.036	0.023
	R2	0.018	0.026	0.009	0.084	0.018	0.040
	R3	0.006	0.017	0.008	0.034	0.010	0.017
	RESPONSE	0.048	0.034	0.018	0.111	0.041	0.049
A16 M	R1	0.046	0.014	0.015	0.057	0.048	0.016
	R2	0.017	0.025	0.009	0.075	0.016	0.031
	R3	0.005	0.018	0.008	0.035	0.009	0.016
	RESPONSE	0.049	0.034	0.019	0.100	0.052	0.038
A16 F	R1	0.049	0.016	0.016	0.044	0.061	0.012
	R2	0.017	0.025	0.008	0.057	0.015	0.024
	R3	0.006	0.020	0.007	0.036	0.007	0.017
	RESPONSE	0.052	0.036	0.019	0.080	0.063	0.031
A17 N	R1	0.051	0.017	0.015	0.043	0.062	0.011
	R2	0.017	0.026	0.008	0.056	0.015	0.023
	R3	0.006	0.021	0.007	0.036	0.007	0.017
	RESPONSE	0.054	0.037	0.018	0.079	0.064	0.031
A17 M	R1	0.054	0.018	0.013	0.038	0.069	0.012
	R2	0.016	0.027	0.007	0.048	0.013	0.024
	R3	0.006	0.023	0.006	0.038	0.008	0.016
	RESPONSE	0.056	0.039	0.016	0.072	0.071	0.031
A17 F	R1	0.055	0.018	0.010	0.039	0.077	0.012
	R2	0.016	0.027	0.006	0.045	0.017	0.023
	R3	0.006	0.023	0.005	0.039	0.009	0.015
	RESPONSE	0.058	0.040	0.013	0.071	0.079	0.030

ICI-4291HF

D I S P L A C E M E N T S

Point name	Load combination	TRANSLATIONS (in) X	Y	Z	ROTATIONS (deg) X	Y	Z
A18 N	R1	0.055	0.018	0.008	0.038	0.077	0.012
	R2	0.016	0.027	0.006	0.045	0.017	0.023
	R3	0.006	0.022	0.005	0.039	0.009	0.015
	RESPONSE	0.058	0.039	0.011	0.071	0.079	0.030
A18 M	R1	0.053	0.017	0.004	0.038	0.087	0.009
	R2	0.016	0.025	0.005	0.044	0.023	0.019
	R3	0.006	0.021	0.004	0.039	0.010	0.015
	RESPONSE	0.056	0.037	0.007	0.070	0.091	0.026
A18 F	R1	0.049	0.016	0.003	0.035	0.099	0.009
	R2	0.014	0.023	0.004	0.047	0.028	0.017
	R3	0.005	0.019	0.003	0.040	0.011	0.015
	RESPONSE	0.051	0.034	0.006	0.071	0.103	0.024
A19 N	R1	0.008	0.002	0.003	0.032	0.104	0.009
	R2	0.003	0.003	0.004	0.050	0.030	0.015
	R3	0.001	0.003	0.003	0.040	0.011	0.013
	RESPONSE	0.008	0.005	0.006	0.072	0.109	0.022
A19 M	R1	0.003	0.001	0.002	0.029	0.103	0.009
	R2	0.001	0.001	0.003	0.046	0.030	0.014
	R3	0.001	0.001	0.002	0.036	0.011	0.013
	RESPONSE	0.003	0.001	0.004	0.065	0.108	0.021
A19 F	R1	0.000	0.000	0.001	0.025	0.103	0.009
	R2	0.000	0.000	0.001	0.040	0.030	0.013
	R3	0.000	0.000	0.001	0.032	0.011	0.011
	RESPONSE	0.000	0.000	0.001	0.057	0.107	0.019
A20	R1	0.000	0.000	0.000	0.025	0.102	0.009
	R2	0.000	0.000	0.000	0.040	0.030	0.013
	R3	0.000	0.000	0.000	0.032	0.011	0.011
	RESPONSE	0.000	0.000	0.001	0.057	0.107	0.019
A21	R1	0.000	0.000	0.000	0.001	0.000	0.000
	R2	0.000	0.000	0.000	0.001	0.000	0.000
	R3	0.000	0.000	0.000	0.001	0.000	0.000
	RESPONSE	0.000	0.000	0.000	0.001	0.000	0.000
A22	R1	0.000	0.000	0.000	0.000	0.000	0.000
	R2	0.000	0.000	0.000	0.000	0.000	0.000
	R3	0.000	0.000	0.000	0.000	0.000	0.000
	RESPONSE	0.000	0.000	0.000	0.000	0.000	0.000

*** Segment A end ***

*** Segment B begin ***

D I S P L A C E M E N T S

Point name	Load combination	TRANSLATIONS (in) X	Y	Z	ROTATIONS (deg) X	Y	Z
A10	R1	0.045	0.024	0.012	0.084	0.017	0.025
	R2	0.018	0.043	0.023	0.118	0.026	0.027
	R3	0.006	0.008	0.005	0.032	0.010	0.018
	RESPONSE	0.049	0.049	0.026	0.148	0.032	0.041
B01	R1	0.041	0.058	0.012	0.084	0.017	0.025
	R2	0.027	0.091	0.023	0.118	0.026	0.027
	R3	0.008	0.020	0.005	0.032	0.010	0.018
	RESPONSE	0.050	0.110	0.026	0.148	0.032	0.041
B02 N	R1	0.040	0.062	0.012	0.084	0.017	0.025
	R2	0.028	0.097	0.023	0.118	0.026	0.027
	R3	0.009	0.021	0.005	0.032	0.010	0.018
	RESPONSE	0.050	0.117	0.026	0.148	0.032	0.041
B02 F	R1	0.039	0.068	0.010	0.084	0.017	0.025
	R2	0.031	0.107	0.021	0.118	0.026	0.027
	R3	0.010	0.023	0.005	0.032	0.010	0.018
	RESPONSE	0.051	0.129	0.023	0.148	0.032	0.041
B03 N	R1	0.039	0.064	0.008	0.084	0.017	0.025
	R2	0.031	0.103	0.017	0.118	0.026	0.027
	R3	0.010	0.021	0.005	0.032	0.010	0.018
	RESPONSE	0.051	0.123	0.019	0.148	0.032	0.041
B03 F	R1	0.040	0.053	0.007	0.084	0.017	0.025
	R2	0.028	0.089	0.015	0.118	0.026	0.027
	R3	0.009	0.017	0.006	0.032	0.010	0.018
	RESPONSE	0.050	0.105	0.017	0.148	0.032	0.041
B04	R1	0.041	0.050	0.007	0.084	0.017	0.025
	R2	0.027	0.084	0.015	0.118	0.026	0.027
	R3	0.008	0.016	0.006	0.032	0.010	0.018
	RESPONSE	0.050	0.099	0.017	0.148	0.032	0.041
A11	R1	0.045	0.017	0.007	0.084	0.017	0.025
	R2	0.018	0.036	0.015	0.118	0.026	0.027
	R3	0.006	0.009	0.006	0.032	0.010	0.018
	RESPONSE	0.049	0.041	0.017	0.148	0.032	0.041

*** Segment B end ***

*** Segment C begin ***

A14	R1	0.045	0.014	0.008	0.072	0.029	0.025
	R2	0.018	0.029	0.009	0.097	0.020	0.039
	R3	0.006	0.014	0.007	0.034	0.009	0.017
	RESPONSE	0.049	0.035	0.014	0.126	0.037	0.049

D I S P L A C E M E N T S

Point name	Load combination	TRANSLATIONS (in) X	Y	Z	ROTATIONS (deg) X	Y	Z
C01	R1	0.045	0.014	0.008	0.073	0.029	0.025
	R2	0.018	0.028	0.009	0.097	0.020	0.039
	R3	0.006	0.015	0.007	0.034	0.009	0.017
	RESPONSE	0.049	0.034	0.014	0.126	0.037	0.049
C01A	R1	0.046	0.014	0.008	0.073	0.029	0.025
	R2	0.017	0.026	0.009	0.097	0.020	0.039
	R3	0.005	0.015	0.007	0.034	0.009	0.017
	RESPONSE	0.050	0.033	0.014	0.126	0.037	0.049
C02 N	R1	0.048	0.015	0.008	0.073	0.029	0.024
	R2	0.016	0.024	0.009	0.098	0.020	0.039
	R3	0.006	0.017	0.007	0.034	0.010	0.018
	RESPONSE	0.051	0.033	0.014	0.126	0.037	0.050
C02 M	R1	0.049	0.017	0.009	0.074	0.028	0.024
	R2	0.016	0.022	0.009	0.099	0.020	0.040
	R3	0.006	0.018	0.008	0.035	0.011	0.018
	RESPONSE	0.052	0.034	0.015	0.129	0.036	0.050
C02 F	R1	0.049	0.018	0.013	0.075	0.028	0.024
	R2	0.018	0.022	0.011	0.101	0.020	0.041
	R3	0.006	0.019	0.010	0.036	0.011	0.018
	RESPONSE	0.052	0.034	0.019	0.131	0.036	0.050
C03	R1	0.049	0.018	0.013	0.075	0.028	0.024
	R2	0.018	0.022	0.011	0.101	0.020	0.041
	R3	0.006	0.019	0.010	0.036	0.011	0.018
	RESPONSE	0.052	0.034	0.019	0.131	0.036	0.050
C04	R1	0.048	0.018	0.017	0.075	0.027	0.024
	R2	0.020	0.022	0.015	0.101	0.020	0.041
	R3	0.007	0.019	0.012	0.036	0.012	0.018
	RESPONSE	0.052	0.034	0.026	0.131	0.036	0.051
C05 N	R1	0.047	0.018	0.020	0.076	0.025	0.023
	R2	0.021	0.022	0.019	0.102	0.021	0.042
	R3	0.007	0.019	0.013	0.037	0.013	0.017
	RESPONSE	0.053	0.034	0.031	0.132	0.035	0.051
C05 M	R1	0.047	0.018	0.023	0.077	0.022	0.023
	R2	0.023	0.022	0.023	0.104	0.021	0.043
	R3	0.008	0.019	0.015	0.038	0.016	0.017
	RESPONSE	0.053	0.034	0.035	0.135	0.035	0.052
C05 F	R1	0.047	0.018	0.023	0.078	0.018	0.023
	R2	0.023	0.022	0.023	0.104	0.022	0.044
	R3	0.008	0.018	0.015	0.039	0.021	0.016
	RESPONSE	0.053	0.034	0.036	0.136	0.036	0.052

D I S P L A C E M E N T S

Point name	Load combination	TRANSLATIONS (in) X	Y	Z	ROTATIONS (deg) X	Y	Z
C06 N	R1	0.047	0.018	0.023	0.079	0.018	0.023
	R2	0.023	0.022	0.023	0.104	0.022	0.044
	R3	0.008	0.018	0.015	0.039	0.021	0.016
	RESPONSE	0.053	0.034	0.036	0.136	0.036	0.052
C06 M	R1	0.047	0.017	0.023	0.079	0.015	0.024
	R2	0.024	0.023	0.023	0.105	0.024	0.044
	R3	0.008	0.017	0.016	0.040	0.025	0.016
	RESPONSE	0.053	0.033	0.036	0.137	0.038	0.052
C06 F	R1	0.047	0.015	0.022	0.079	0.013	0.024
	R2	0.025	0.025	0.022	0.106	0.026	0.045
	R3	0.008	0.017	0.016	0.041	0.028	0.016
	RESPONSE	0.053	0.033	0.035	0.139	0.040	0.053
C07	R1	0.046	0.016	0.022	0.079	0.013	0.024
	R2	0.028	0.035	0.022	0.107	0.027	0.045
	R3	0.010	0.015	0.016	0.042	0.029	0.016
	RESPONSE	0.055	0.042	0.035	0.140	0.041	0.053
*** Segment C end ***							
A09	R1	0.045	0.027	0.014	0.084	0.017	0.025
	R2	0.018	0.046	0.027	0.118	0.026	0.027
	R3	0.006	0.009	0.006	0.032	0.010	0.018
	RESPONSE	0.049	0.054	0.031	0.148	0.032	0.041
1	R1	0.042	0.027	0.006	0.087	0.018	0.025
	R2	0.020	0.046	0.013	0.120	0.027	0.026
	R3	0.007	0.009	0.005	0.034	0.011	0.018
	RESPONSE	0.047	0.054	0.015	0.152	0.034	0.040
2	R1	0.042	0.024	0.005	0.085	0.018	0.026
	R2	0.020	0.043	0.010	0.118	0.026	0.028
	R3	0.007	0.008	0.005	0.033	0.011	0.019
	RESPONSE	0.047	0.049	0.012	0.149	0.033	0.043
3	R1	0.042	0.017	0.009	0.082	0.015	0.024
	R2	0.020	0.036	0.008	0.112	0.023	0.025
	R3	0.007	0.009	0.008	0.031	0.008	0.018
	RESPONSE	0.047	0.041	0.014	0.142	0.028	0.039
4	R1	0.042	0.016	0.011	0.084	0.015	0.023
	R2	0.020	0.034	0.010	0.117	0.024	0.026
	R3	0.007	0.011	0.009	0.031	0.008	0.018
	RESPONSE	0.047	0.039	0.017	0.147	0.029	0.039

D I S P L A C E M E N T S

Point name	Load combination	TRANSLATIONS (in) X	Y	Z	ROTATIONS (deg) X	Y	Z
A12	R1	0.045	0.016	0.006	0.084	0.017	0.025
	R2	0.018	0.034	0.012	0.118	0.026	0.027
	R3	0.006	0.011	0.007	0.032	0.010	0.018
	RESPONSE	0.049	0.039	0.015	0.148	0.032	0.041
5	R1	0.041	0.050	0.009	0.093	0.013	0.067
	R2	0.027	0.084	0.008	0.131	0.022	0.079
	R3	0.008	0.016	0.008	0.035	0.007	0.051
	RESPONSE	0.050	0.099	0.014	0.164	0.026	0.116
6	R1	0.039	0.070	0.009	0.099	0.015	0.030
	R2	0.033	0.112	0.008	0.140	0.024	0.031
	R3	0.010	0.023	0.008	0.038	0.009	0.021
	RESPONSE	0.052	0.134	0.014	0.176	0.030	0.048
7	R1	0.039	0.074	0.006	0.096	0.018	0.023
	R2	0.033	0.116	0.008	0.136	0.026	0.022
	R3	0.010	0.025	0.007	0.035	0.010	0.018
	RESPONSE	0.052	0.140	0.012	0.170	0.033	0.037
8	R1	0.039	0.077	0.005	0.095	0.019	0.017
	R2	0.033	0.118	0.010	0.131	0.028	0.016
	R3	0.010	0.027	0.005	0.036	0.011	0.015
	RESPONSE	0.052	0.143	0.012	0.166	0.035	0.027
9	R1	0.041	0.058	0.005	0.085	0.019	0.010
	R2	0.027	0.091	0.010	0.119	0.028	0.010
	R3	0.008	0.020	0.005	0.032	0.012	0.007
	RESPONSE	0.050	0.110	0.012	0.150	0.036	0.016
B01	R1	0.041	0.058	0.012	0.084	0.017	0.025
	R2	0.027	0.091	0.023	0.118	0.026	0.027
	R3	0.008	0.020	0.005	0.032	0.010	0.018
	RESPONSE	0.050	0.110	0.026	0.148	0.032	0.041
10	R1	0.045	0.024	0.005	0.084	0.019	0.006
	R2	0.017	0.043	0.010	0.116	0.028	0.011
	R3	0.005	0.008	0.005	0.032	0.012	0.007
	RESPONSE	0.049	0.050	0.012	0.147	0.036	0.015
B05	R1	0.046	0.050	0.007	0.093	0.013	0.067
	R2	0.020	0.084	0.016	0.131	0.021	0.079
	R3	0.006	0.016	0.006	0.035	0.007	0.051
	RESPONSE	0.051	0.099	0.018	0.164	0.026	0.116

S U P P O R T F O R C E S

Point/ Supp. ID	Connect/ Type	Load Combination	LOCAL Dirn	Force	Deform	GLOBAL Dirn	Force	Deform
B01	9	R1	down	23	0.000	X	233	0.000
B01 1	Guide		left	233	0.000	Y	23	0.000
Stiff	:RIGID					Z		0.010
		R2	down	31	0.000	X	270	0.000
			left	270	0.000	Y	31	0.000
						Z		0.014
		R3	down	9	0.000	X	186	0.000
			left	186	0.000	Y	9	0.000
						Z		0.004
		RESPONSE	down	40	0.000	X	402	0.000
			left	402	0.000	Y	40	0.000
						Z		0.018
B04	5	R1	down	28	0.000	X	37	0.000
B04 1	Guide		left	37	0.000	Y	28	0.000
Stiff	:RIGID					Z		0.010
		R2	down	41	0.000	X	56	0.000
			left	56	0.000	Y	41	0.000
						Z		0.015
		R3	down	11	0.000	X	34	0.000
			left	34	0.000	Y	11	0.000
						Z		0.004
		RESPONSE	down	51	0.000	X	75	0.000
			left	75	0.000	Y	51	0.000
						Z		0.018

RESTRAINT REACTIONS

Point name	Load combination	FORCES (lb) X	Y	Z	Result	MOMENTS (ft-lb) X	Y	Z	Result
A00	Anchor								
	R1	189	48	46	201	100	173	26	202
	R2	73	83	42	118	180	93	6	202
	R3	29	36	65	80	39	37	4	54
	RESPONSE	205	102	90	246	209	200	27	291
A22	Anchor								
	R1	80	59	30	104	52	31	38	72
	R2	29	130	51	143	94	9	32	100
	R3	13	46	80	93	79	3	25	83
	RESPONSE	86	150	99	200	133	32	56	148
B01	Guide								
	R1	233	23	0	234	0	0	0	0
	R2	270	31	0	272	0	0	0	0
	R3	186	9	0	186	0	0	0	0
	RESPONSE	402	40	0	404	0	0	0	0
B04	Guide								
	R1	37	28	0	46	0	0	0	0
	R2	56	41	0	69	0	0	0	0
	R3	34	11	0	36	0	0	0	0
	RESPONSE	75	51	0	91	0	0	0	0

LOCAL FORCES & MOMENTS

Point name	Load combination	FORCES (lb) X	Y	Z	Result	MOMENTS (ft-lb) X	Y	Z	Result
*** Segment A begin ***									
A00	R1	46	48	189	200	26	173	100	202
	R2	42	83	73	118	6	93	180	202
	R3	65	36	29	80	4	37	39	54
	RESPONSE	90	102	205	246	27	200	209	291
A01	R1	46	48	188	199	26	126	89	157
	R2	42	78	73	115	6	75	163	179
	R3	59	36	29	75	4	29	36	47
	RESPONSE	86	98	204	242	27	150	189	243
A03	R1	46	47	187	198	26	108	85	139
	R2	42	75	73	113	6	68	157	171
	R3	55	36	29	72	4	27	35	45
	RESPONSE	83	96	203	239	27	130	182	225
A04 N	R1	46	37	189	198	26	98	78	128
	R2	42	80	68	113	6	45	159	165
	R3	55	34	32	72	4	22	37	43
	RESPONSE	83	94	204	239	27	110	181	213
A04 M	R1	39	44	189	198	33	43	72	90
	R2	36	82	67	112	26	17	139	143
	R3	43	47	32	72	15	7	34	38
	RESPONSE	69	105	203	239	45	47	160	173
A04 F	R1	37	189	46	198	35	72	38	88
	R2	79	67	41	112	23	125	22	129
	R3	34	32	54	71	12	32	13	36
	RESPONSE	94	203	82	238	44	148	45	161
A05 N	R1	37	46	187	196	35	124	81	152
	R2	79	41	67	111	23	52	112	126
	R3	34	53	32	70	12	27	39	49
	RESPONSE	93	81	202	236	44	137	144	203
A05 M	R1	39	44	186	195	140	129	89	210
	R2	35	80	67	110	63	45	95	123
	R3	42	46	32	70	32	22	54	67
	RESPONSE	67	102	200	235	157	138	141	252
A05 F	R1	47	46	182	193	217	69	81	242
	R2	39	73	72	109	86	14	79	117
	R3	51	36	29	69	43	11	65	79
	RESPONSE	79	93	198	232	237	71	130	280

L O C A L F O R C E S & M O M E N T S

Point name	Load combination	FORCES (lb) X	Y	Z	Result	MOMENTS (ft-lb) X	Y	Z	Result
A06	R1	47	45	180	192	217	135	71	266
	R2	38	72	71	108	86	33	75	119
	R3	50	36	29	68	43	16	73	86
	RESPONSE	78	92	196	230	237	140	126	303
A07	R1	47	45	179	191	217	195	64	299
	R2	37	71	71	107	86	55	80	130
	R3	50	36	29	68	43	23	81	94
	RESPONSE	78	92	195	229	237	204	130	339
A08 N	R1	47	179	45	190	217	64	195	299
	R2	37	71	71	107	86	80	56	130
	R3	50	29	36	68	43	81	24	94
	RESPONSE	78	194	91	228	237	130	205	339
A08 M	R1	158	94	44	189	128	182	238	326
	R2	69	39	70	106	102	73	71	144
	R3	40	41	36	67	84	48	30	101
	RESPONSE	177	109	90	227	184	202	250	370
A08 F	R1	177	44	47	188	60	245	207	327
	R2	70	70	36	105	93	73	99	154
	R3	29	36	49	67	91	35	34	103
	RESPONSE	193	90	77	226	143	258	232	376
A09 -	R1	177	44	47	188	60	245	207	326
	R2	70	70	36	105	93	73	99	154
	R3	29	36	49	67	91	35	34	103
	RESPONSE	193	90	77	226	143	258	232	375
A09 +	R1	100	32	34	110	50	239	170	298
	R2	96	52	33	114	84	75	113	159
	R3	50	39	36	72	82	36	44	99
	RESPONSE	147	73	60	175	127	253	209	352
A10 -	R1	100	32	34	110	50	214	158	271
	R2	96	52	33	114	84	57	132	166
	R3	50	39	36	72	82	47	30	99
	RESPONSE	147	73	60	175	127	227	208	333
A10 +	R1	139	32	13	143	31	114	100	155
	R2	82	50	19	98	65	53	153	175
	R3	42	36	23	60	49	29	67	87
	RESPONSE	166	70	32	183	87	129	195	249
A11 -	R1	139	32	13	143	31	94	93	136
	R2	82	50	19	98	65	36	195	208
	R3	42	36	23	60	49	54	37	82
	RESPONSE	166	70	32	183	87	114	219	262

L O C A L F O R C E S & M O M E N T S

Point name	Load combination	FORCES (lb) X	Y	Z	Result	MOMENTS (ft-lb) X	Y	Z	Result
A11 +	R1	105	37	21	113	117	180	110	242
	R2	32	65	44	84	189	116	239	326
	R3	13	52	35	64	58	106	52	132
	RESPONSE	111	91	60	155	230	239	268	427
A12 -	R1	105	37	21	113	117	172	102	232
	R2	32	65	44	84	189	93	210	298
	R3	13	52	35	64	58	116	46	138
	RESPONSE	111	91	60	155	230	227	238	402
A12 +	R1	5	50	36	61	100	170	100	221
	R2	5	99	28	103	176	94	211	291
	R3	9	21	42	48	54	115	46	135
	RESPONSE	12	112	62	129	210	225	238	389
A13	R1	11	50	36	63	100	136	76	185
	R2	7	101	30	106	176	71	118	224
	R3	10	21	45	50	54	75	35	98
	RESPONSE	16	115	64	133	210	170	145	306
A13A	R1	15	51	35	64	100	130	74	180
	R2	8	103	31	108	176	67	103	215
	R3	10	21	46	52	54	68	33	93
	RESPONSE	19	117	66	136	210	161	131	295
A14 -	R1	15	51	35	64	100	127	73	177
	R2	8	103	31	108	176	65	93	210
	R3	10	21	46	52	54	63	32	89
	RESPONSE	19	117	66	136	210	156	122	288
A14 +	R1	46	55	31	78	106	123	55	171
	R2	20	116	44	126	177	59	81	204
	R3	9	31	66	74	42	55	31	76
	RESPONSE	51	133	85	165	211	147	103	277
A15	R1	50	56	30	81	106	120	53	169
	R2	22	118	45	128	177	56	70	198
	R3	10	33	67	76	42	49	28	70
	RESPONSE	55	135	86	170	211	141	92	270
A15A	R1	55	57	30	85	106	116	51	165
	R2	23	121	46	132	177	51	52	191
	R3	10	35	69	78	42	39	23	62
	RESPONSE	60	138	88	175	211	133	76	260
A16 N	R1	57	37	53	86	106	83	83	158
	R2	24	59	116	133	177	21	44	183
	R3	10	64	45	79	42	10	14	46
	RESPONSE	62	94	135	176	211	86	95	247

L O C A L F O R C E S & M O M E N T S

Point name	Load combination	FORCES (lb) X	Y	Z	Result	MOMENTS (ft-lb) X	Y	Z	Result
A16 M	R1	61	31	53	87	48	133	83	164
	R2	43	48	117	133	104	165	55	203
	R3	50	41	46	79	31	37	25	54
	RESPONSE	90	70	136	178	119	215	103	266
A16 F	R1	37	53	59	88	90	97	124	181
	R2	60	117	25	134	59	64	220	237
	R3	64	46	11	80	23	30	51	63
	RESPONSE	95	136	65	179	110	120	257	305
A17 N	R1	37	59	55	89	90	141	96	193
	R2	61	60	104	134	59	207	143	258
	R3	64	21	43	80	23	53	35	68
	RESPONSE	96	87	125	180	110	256	176	330
A17 M	R1	38	60	55	90	162	68	110	207
	R2	73	46	104	135	190	139	153	281
	R3	39	56	44	81	52	38	32	72
	RESPONSE	91	94	125	181	255	159	191	356
A17 F	R1	60	61	29	91	164	129	42	213
	R2	63	109	48	135	242	146	44	286
	R3	18	38	70	81	66	29	13	73
	RESPONSE	89	131	90	182	300	197	62	364
A18 N	R1	61	29	61	92	164	38	130	213
	R2	64	48	110	136	242	37	146	285
	R3	18	70	38	82	66	13	29	73
	RESPONSE	90	90	131	183	300	54	198	363
A18 M	R1	59	37	62	93	98	128	128	205
	R2	58	55	110	136	159	169	141	272
	R3	58	43	39	82	51	40	34	73
	RESPONSE	101	79	132	184	194	216	193	349
A18 F	R1	29	59	74	99	24	135	126	186
	R2	49	127	28	139	21	55	235	242
	R3	71	46	12	85	20	26	59	67
	RESPONSE	91	147	80	190	37	148	273	313
A19 N	R1	29	59	75	100	24	7	48	54
	R2	50	127	29	140	21	4	41	46
	R3	71	46	13	86	20	4	41	45
	RESPONSE	92	147	81	192	37	8	75	84
A19 M	R1	40	52	75	100	28	10	48	57
	R2	91	103	29	140	17	14	60	64
	R3	65	55	13	86	16	13	51	55
	RESPONSE	118	128	81	192	36	22	92	101

L O C A L F O R C E S & M O M E N T S

Point name	Load combination	FORCES (lb) X	Y	Z	Result	MOMENTS (ft-lb) X	Y	Z	Result
A19 F	R1	59	30	75	100	31	12	50	60
	R2	127	50	29	140	9	24	77	81
	R3	46	72	13	86	3	22	60	64
	RESPONSE	148	92	81	192	32	35	110	119
A20	R1	59	30	77	101	31	15	50	61
	R2	128	51	29	141	9	25	80	84
	R3	46	75	13	89	3	22	62	66
	RESPONSE	148	95	83	195	32	37	113	123
A21	R1	59	30	80	104	31	20	50	63
	R2	130	51	29	143	9	27	84	88
	R3	46	80	13	93	3	23	66	70
	RESPONSE	150	99	86	199	32	41	118	129
A22	R1	59	30	80	104	31	38	52	72
	R2	130	51	29	143	9	32	94	100
	R3	46	80	13	93	3	25	79	83
	RESPONSE	150	99	86	199	32	56	133	148

*** Segment A end ***

*** Segment B begin ***

Point name	Load combination	X	Y	Z	Result	X	Y	Z	Result
A10	R1	22	2	45	50	80	102	32	134
	R2	16	5	19	25	60	23	40	75
	R3	14	9	19	25	54	31	36	72
	RESPONSE	30	10	52	61	114	109	63	169
B01 -	R1	22	2	45	50	80	18	33	89
	R2	16	5	19	25	60	24	35	73
	R3	14	9	19	25	54	14	28	62
	RESPONSE	30	10	52	61	114	33	55	131
B01 +	R1	13	24	55	62	65	19	9	68
	R2	27	29	11	41	103	23	18	107
	R3	17	13	14	25	48	13	14	52
	RESPONSE	35	40	58	78	131	33	24	137
B02 N	R1	13	55	24	62	65	9	11	66
	R2	27	11	29	41	103	17	23	107
	R3	17	14	13	25	48	15	14	52
	RESPONSE	35	58	40	78	131	24	29	136
B02 F	R1	55	24	13	62	17	23	53	60
	R2	11	29	27	41	22	11	89	93
	R3	14	13	17	25	19	10	43	48
	RESPONSE	58	40	35	78	34	27	113	121

L O C A L F O R C E S & M O M E N T S

Point name	Load combination	FORCES (lb) X	Y	Z	Result	MOMENTS (ft-lb) X	Y	Z	Result
B03 N	R1	55	13	24	62	17	35	21	44
	R2	11	27	29	41	22	67	13	72
	R3	14	17	13	25	19	35	8	40
	RESPONSE	58	35	40	78	34	83	26	93
B03 F	R1	13	24	55	62	26	15	9	32
	R2	27	29	11	41	53	27	17	62
	R3	17	13	14	25	31	17	15	38
	RESPONSE	35	40	58	78	67	35	24	79
B04 -	R1	13	24	55	62	26	24	9	37
	R2	27	29	11	41	53	27	18	63
	R3	17	13	14	25	31	18	14	38
	RESPONSE	35	40	58	78	67	41	24	82
B04 +	R1	13	52	39	66	26	24	9	37
	R2	27	70	55	93	53	27	18	63
	R3	17	21	35	44	31	18	14	38
	RESPONSE	35	89	76	123	67	41	24	82
A11	R1	13	52	39	66	26	89	106	141
	R2	27	70	55	93	53	85	147	178
	R3	17	21	35	44	31	59	37	76
	RESPONSE	35	89	76	123	67	137	185	240
*** Segment B end ***									
*** Segment C begin ***									
A14	R1	11	10	29	32	19	4	12	23
	R2	13	20	12	27	13	6	15	21
	R3	20	21	10	31	9	9	19	23
	RESPONSE	26	31	33	52	25	12	27	39
C01	R1	10	8	25	28	19	2	11	23
	R2	12	17	11	24	13	5	14	20
	R3	18	19	10	28	9	9	20	24
	RESPONSE	24	27	29	46	25	11	27	38
C01A	R1	9	7	20	23	19	4	11	22
	R2	11	14	10	21	13	4	13	19
	R3	17	17	10	26	9	10	21	25
	RESPONSE	22	23	24	40	25	12	27	38
C02 N	R1	9	6	19	22	19	9	10	24
	R2	11	14	9	20	13	4	13	19
	R3	17	16	10	25	9	12	23	28
	RESPONSE	22	22	23	39	25	15	29	41

L O C A L F O R C E S & M O M E N T S

Point name	Load combination	FORCES (lb) X	Y	Z	Result	MOMENTS (ft-lb) X	Y	Z	Result
C02 M	R1	6	9	17	20	22	3	9	24
	R2	11	13	9	19	11	6	14	19
	R3	19	12	10	25	14	8	24	29
	RESPONSE	22	20	22	37	28	11	29	42
C02 F	R1	6	8	17	20	16	13	7	21
	R2	13	10	9	19	6	10	13	17
	R3	15	16	10	24	15	6	22	27
	RESPONSE	21	21	22	36	23	17	26	39
C03	R1	6	8	16	19	16	13	7	21
	R2	12	10	9	18	6	10	13	17
	R3	15	16	10	24	15	6	22	27
	RESPONSE	20	21	21	36	23	17	26	39
C04	R1	5	8	16	18	16	8	5	18
	R2	12	10	9	18	6	8	11	15
	R3	15	15	10	24	15	5	18	24
	RESPONSE	20	20	21	35	23	12	22	34
C05 N	R1	5	15	8	18	16	4	5	17
	R2	12	8	10	17	6	11	7	14
	R3	14	10	15	23	15	15	6	22
	RESPONSE	19	20	20	34	23	19	10	31
C05 M	R1	10	12	8	17	11	11	3	16
	R2	9	11	10	17	10	7	5	13
	R3	16	8	15	23	7	18	6	20
	RESPONSE	21	18	19	34	16	23	8	29
C05 F	R1	15	5	8	17	4	14	1	15
	R2	8	12	9	17	10	6	3	13
	R3	10	14	15	23	13	12	4	18
	RESPONSE	20	19	19	33	17	20	5	27
C06 N	R1	14	7	5	17	4	1	14	15
	R2	8	9	11	17	10	3	6	13
	R3	10	15	14	23	13	4	12	18
	RESPONSE	19	19	19	33	17	5	20	27
C06 M	R1	7	14	5	16	3	3	12	13
	R2	10	6	11	16	6	7	6	12
	R3	9	15	14	22	8	9	10	15
	RESPONSE	16	21	18	32	10	12	17	23
C06 F	R1	7	5	13	15	0	9	3	10
	R2	8	11	8	16	0	5	8	9
	R3	13	13	10	21	0	7	10	12
	RESPONSE	17	18	18	31	0	13	13	18

L O C A L F O R C E S & M O M E N T S

Point name	Load combination	FORCES (lb) X	Y	Z	Result	MOMENTS (ft-lb) X	Y	Z	Result
C07	R1	7	5	13	15	0	0	0	0
	R2	8	11	8	16	0	0	0	0
	R3	13	13	10	21	0	0	0	0
	RESPONSE	17	18	18	31	0	0	0	0

*** Segment C end ***

B E A M F O R C E S & M O M E N T S

Beam ID	Load combination	Point name	FORCES (lb) Axial	Y-Shear	Z-Shear	MOMENTS (ft-lb) Torsion	Y-Y Mom.	Z-Z Mom.
M1	R1	A09	8	76	17	6	11	41
		1	8	76	17	6	1	4
	R2	A09	16	40	18	3	11	20
		1	16	40	18	3	1	3
	R3	A09	10	28	16	2	10	14
		1	10	28	16	2	1	2
	RESPONSE	A09	20	90	29	7	19	48
		1	20	90	29	7	2	5
M2	R1	1	60	17	3	1	4	6
		2	60	17	3	1	2	8
	R2	1	45	18	2	1	3	3
		2	45	18	2	1	1	11
	R3	1	31	13	2	1	2	2
		2	31	13	2	1	1	7
	RESPONSE	1	81	28	4	2	5	7
		2	81	28	4	2	2	15
M3	R1	2	58	17	3	1	2	8
		3	58	17	3	1	5	39
	R2	2	46	18	3	1	1	11
		3	46	18	3	1	4	44
	R3	2	31	13	2	1	1	7
		3	31	13	2	1	3	31
	RESPONSE	2	80	28	5	2	2	15
		3	80	28	5	2	7	66
M4	R1	3	6	37	3	3	2	26
		4	6	37	3	3	1	2
	R2	3	7	31	5	3	2	22
		4	7	31	5	3	3	2
	R3	3	5	25	3	2	1	17
		4	5	25	3	2	1	2
	RESPONSE	3	10	54	7	5	3	38
		4	10	54	7	5	3	4
M5	R1	4	5	32	12	2	1	3
		A12	5	32	12	2	7	22
	R2	4	11	27	3	2	3	3
		A12	11	27	3	2	3	19
	R3	4	9	29	3	2	1	2
		A12	9	29	3	2	2	18
	RESPONSE	4	16	51	13	4	3	5
		A12	16	51	13	4	8	34

B E A M F O R C E S & M O M E N T S

Beam ID	Load combination	Point name	FORCES (lb) Axial	Y-Shear	Z-Shear	MOMENTS (ft-lb) Torsion	Y-Y Mom.	Z-Z Mom.
M6	R1	3	21	49	8	3	2	64
		5	21	49	8	3	15	34
	R2	3	14	54	12	3	2	66
		5	14	54	12	3	22	42
	R3	3	13	36	3	2	1	46
		5	13	36	3	2	6	27
	RESPONSE	3	29	81	15	4	3	103
		5	29	81	15	4	27	60
M7	R1	5	22	13	16	3	15	34
		6	22	13	16	3	2	45
	R2	5	15	5	24	3	22	42
		6	15	5	24	3	1	42
	R3	5	12	6	7	2	6	27
		6	12	6	7	2	1	30
	RESPONSE	5	29	15	29	5	27	60
		6	29	15	29	5	3	69
M8	R1	6	11	22	14	2	3	45
		7	11	22	14	2	15	25
	R2	6	4	15	20	1	3	42
		7	4	15	20	1	21	29
	R3	6	6	12	6	1	2	30
		7	6	12	6	1	7	20
	RESPONSE	6	14	30	25	3	5	69
		7	14	30	25	3	27	43
M9	R1	7	7	25	16	2	15	25
		8	7	25	16	2	1	6
	R2	7	12	17	21	1	21	29
		8	12	17	21	1	2	14
	R3	7	9	13	6	1	7	20
		8	9	13	6	1	2	10
	RESPONSE	7	17	33	27	3	27	43
		8	17	33	27	3	3	18
M10	R1	8	25	9	18	1	2	6
		9	25	9	18	1	20	6
	R2	8	17	14	25	2	1	14
		9	17	14	25	2	26	1
	R3	8	13	10	7	2	1	10
		9	13	10	7	2	8	1
	RESPONSE	8	33	19	32	3	3	18
		9	33	19	32	3	34	6
M11	R1	9	0	2	1	0	2	4
		10	0	2	1	0	0	0
	R2	9	1	1	1	0	3	1
		10	1	1	1	0	0	0

B E A M F O R C E S & M O M E N T S

Beam ID	Load combination	Point name	FORCES (lb) Axial	Y-Shear	Z-Shear	MOMENTS (ft-lb) Torsion	Y-Y Mom.	Z-Z Mom.
	R3	9	1	0	1	0	2	1
		10	1	0	1	0	0	0
	RESPONSE	9	1	2	2	0	4	4
		10	1	2	2	0	0	0
M12	R1	5	1	0	1	0	0	0
		B05	1	0	1	0	0	0
	R2	5	1	0	0	0	0	0
		B05	1	0	0	0	0	0
	R3	5	0	0	0	0	0	0
		B05	0	0	0	0	0	0
	RESPONSE	5	1	0	1	0	0	0
		B05	1	0	1	0	0	0
M13	R1	9	0	25	239	2	1	19
		B01	0	25	239	2	137	33
	R2	9	0	18	255	1	2	23
		B01	0	18	255	1	146	31
	R3	9	0	14	176	1	2	8
		B01	0	14	176	1	100	15
	RESPONSE	9	0	34	391	2	3	31
		B01	0	34	391	2	224	48

ASME B31.3c (1992) CODE COMPLIANCE

Point name	Load combination	(Moments in ft-lb) In-Pl. Moment	Out-Pl. Moment	Torsion Moment	S.I.F In	S.I.F Out	Eq. no.	Load type	(Stress in psi) Code Stress	Code Allow.
*** Segment A begin ***										
A00	Sus. + R1	100	173		1.00	1.00	(18)	OCC	959	22211
	Sus. + R2	180	93		1.00	1.00	(18)	OCC	971	22211
	Sus. + R3	39	37		1.00	1.00	(18)	OCC	258	22211
A01	Sus. + R1	89	126		1.00	1.00	(18)	OCC	741	22211
	Sus. + R2	163	75		1.00	1.00	(18)	OCC	861	22211
	Sus. + R3	36	29		1.00	1.00	(18)	OCC	224	22211
A03	Sus. + R1	85	108		1.00	1.00	(18)	OCC	657	22211
	Sus. + R2	157	68		1.00	1.00	(18)	OCC	819	22211
	Sus. + R3	35	27		1.00	1.00	(18)	OCC	213	22211
A04 N-	Sus. + R1	82	95		1.00	1.00	(18)	OCC	603	22211
	Sus. + R2	152	63		1.00	1.00	(18)	OCC	791	22211
	Sus. + R3	35	25		1.00	1.00	(18)	OCC	206	22211
A04 N+	Sus. + R1	78	98		2.56	2.13	(18)	OCC	1391	22211
	Sus. + R2	159	45		2.56	2.13	(18)	OCC	2001	22211
	Sus. + R3	37	22		2.56	2.13	(18)	OCC	505	22211
A04 M	Sus. + R1	72	43		2.56	2.13	(18)	OCC	983	22211
	Sus. + R2	139	17		2.56	2.13	(18)	OCC	1718	22211
	Sus. + R3	34	7		2.56	2.13	(18)	OCC	428	22211
A04 F-	Sus. + R1	72	38		2.56	2.13	(18)	OCC	961	22211
	Sus. + R2	125	22		2.56	2.13	(18)	OCC	1555	22211
	Sus. + R3	32	13		2.56	2.13	(18)	OCC	413	22211
A04 F+	Sus. + R1	38	72		1.00	1.00	(18)	OCC	389	22211
	Sus. + R2	22	125		1.00	1.00	(18)	OCC	611	22211
	Sus. + R3	13	32		1.00	1.00	(18)	OCC	165	22211
A05 N-	Sus. + R1	124	81		1.00	1.00	(18)	OCC	711	22211
	Sus. + R2	52	112		1.00	1.00	(18)	OCC	593	22211
	Sus. + R3	27	39		1.00	1.00	(18)	OCC	229	22211
A05 N+	Sus. + R1	81	124		1.95	1.63	(18)	OCC	1231	22211
	Sus. + R2	112	52		1.95	1.63	(18)	OCC	1125	22211
	Sus. + R3	39	27		1.95	1.63	(18)	OCC	424	22211
A05 M	Sus. + R1	89	129		1.95	1.63	(18)	OCC	1308	22211
	Sus. + R2	95	45		1.95	1.63	(18)	OCC	958	22211
	Sus. + R3	54	22		1.95	1.63	(18)	OCC	537	22211

ASME B31.3c (1992) CODE COMPLIANCE

Point name	Load combination	(Moments in ft-lb) In-Pl. Moment	Out-Pl. Moment	Torsion Moment	S.I.F In	S.I.F Out	Eq. no.	Load type	(Stress in psi) Code Stress	Code Allow.
A05 F-	Sus. + R1	89	58		1.95	1.63	(18)	OCC	951	22211
	Sus. + R2	79	13		1.95	1.63	(18)	OCC	744	22211
	Sus. + R3	66	6		1.95	1.63	(18)	OCC	616	22211
A05 F+	Sus. + R1	81	69		1.00	1.00	(18)	OCC	511	22211
	Sus. + R2	79	14		1.00	1.00	(18)	OCC	383	22211
	Sus. + R3	65	11		1.00	1.00	(18)	OCC	316	22211
A06	Sus. + R1	71	135		1.00	1.00	(18)	OCC	733	22211
	Sus. + R2	75	33		1.00	1.00	(18)	OCC	393	22211
	Sus. + R3	73	16		1.00	1.00	(18)	OCC	357	22211
A07	Sus. + R1	64	195		1.00	1.00	(18)	OCC	1874	22211
	Sus. + R2	80	55		1.00	1.00	(18)	OCC	888	22211
	Sus. + R3	81	23		1.00	1.00	(18)	OCC	769	22211
A08 N-	Sus. + R1	64	195		1.00	1.00	(18)	OCC	1881	22211
	Sus. + R2	80	56		1.00	1.00	(18)	OCC	891	22211
	Sus. + R3	81	24		1.00	1.00	(18)	OCC	771	22211
A08 N+	Sus. + R1	195	64		1.78	1.48	(18)	OCC	3293	22211
	Sus. + R2	56	80		1.78	1.48	(18)	OCC	1410	22211
	Sus. + R3	24	81		1.78	1.48	(18)	OCC	1160	22211
A08 M	Sus. + R1	238	182		1.78	1.48	(18)	OCC	4583	22211
	Sus. + R2	71	73		1.78	1.48	(18)	OCC	1525	22211
	Sus. + R3	30	48		1.78	1.48	(18)	OCC	811	22211
A08 F-	Sus. + R1	245	207		1.78	1.48	(18)	OCC	4874	22211
	Sus. + R2	73	99		1.78	1.48	(18)	OCC	1789	22211
	Sus. + R3	35	34		1.78	1.48	(18)	OCC	732	22211
A08 F+	Sus. + R1	207	245		1.00	1.00	(18)	OCC	2936	22211
	Sus. + R2	99	73		1.00	1.00	(18)	OCC	1124	22211
	Sus. + R3	34	35		1.00	1.00	(18)	OCC	447	22211
A09	Sus. + R1	207	245		1.00	1.00	(18)	OCC	2934	22211
	Sus. + R2	99	73		1.00	1.00	(18)	OCC	1125	22211
	Sus. + R3	34	35		1.00	1.00	(18)	OCC	447	22211
A12	Sus. + R1	100	170		1.00	1.00	(18)	OCC	1803	22211
	Sus. + R2	211	94		1.00	1.00	(18)	OCC	2114	22211
	Sus. + R3	46	115		1.00	1.00	(18)	OCC	1132	22211
A13	Sus. + R1	76	136		1.00	1.00	(18)	OCC	1420	22211
	Sus. + R2	118	71		1.00	1.00	(18)	OCC	1263	22211
	Sus. + R3	35	75		1.00	1.00	(18)	OCC	755	22211

ASME B31.3c (1992) CODE COMPLIANCE

Point name	Load combination	In-Pl. Moment (Moments in ft-lb)	Out-Pl. Moment	Torsion Moment	S.I.F In	S.I.F Out	Eq. Load no.	Load type	Code Stress (Stress in psi)	Code Allow.
A13A	Sus. + R1	74	130		1.00	1.00	(18)	OCC	1367	22211
	Sus. + R2	103	67		1.00	1.00	(18)	OCC	1125	22211
	Sus. + R3	33	68		1.00	1.00	(18)	OCC	692	22211
A14 -	Sus. + R1	127	73		1.22	1.30	(18)	OCC	1657	22211
	Sus. + R2	65	93		1.22	1.30	(18)	OCC	1321	22211
	Sus. + R3	63	32		1.22	1.30	(18)	OCC	806	22211
A14 +	Sus. + R1	123	55		1.22	1.30	(18)	OCC	1519	22211
	Sus. + R2	59	81		1.22	1.30	(18)	OCC	1170	22211
	Sus. + R3	55	31		1.22	1.30	(18)	OCC	717	22211
A15	Sus. + R1	53	120		1.00	1.00	(18)	OCC	1202	22211
	Sus. + R2	70	56		1.00	1.00	(18)	OCC	820	22211
	Sus. + R3	28	49		1.00	1.00	(18)	OCC	515	22211
A15A	Sus. + R1	51	116		1.00	1.00	(18)	OCC	1161	22211
	Sus. + R2	52	51		1.00	1.00	(18)	OCC	665	22211
	Sus. + R3	23	39		1.00	1.00	(18)	OCC	412	22211
A16 N-	Sus. + R1	57	102		1.00	1.00	(18)	OCC	1073	22211
	Sus. + R2	27	40		1.00	1.00	(18)	OCC	442	22211
	Sus. + R3	10	15		1.00	1.00	(18)	OCC	161	22211
A16 N+	Sus. + R1	83	83		1.78	1.48	(18)	OCC	1754	22211
	Sus. + R2	44	21		1.78	1.48	(18)	OCC	763	22211
	Sus. + R3	14	10		1.78	1.48	(18)	OCC	270	22211
A16 M	Sus. + R1	83	133		1.78	1.48	(18)	OCC	2257	22211
	Sus. + R2	55	165		1.78	1.48	(18)	OCC	2405	22211
	Sus. + R3	25	37		1.78	1.48	(18)	OCC	639	22211
A16 F-	Sus. + R1	97	124		1.78	1.48	(18)	OCC	2294	22211
	Sus. + R2	64	220		1.78	1.48	(18)	OCC	3157	22211
	Sus. + R3	30	51		1.78	1.48	(18)	OCC	844	22211
A16 F+	Sus. + R1	124	97		1.00	1.00	(18)	OCC	753	22211
	Sus. + R2	220	64		1.00	1.00	(18)	OCC	1100	22211
	Sus. + R3	51	30		1.00	1.00	(18)	OCC	283	22211
A17 N-	Sus. + R1	133	108		1.00	1.00	(18)	OCC	820	22211
	Sus. + R2	242	68		1.00	1.00	(18)	OCC	1207	22211
	Sus. + R3	57	30		1.00	1.00	(18)	OCC	308	22211
A17 N+	Sus. + R1	96	141		2.56	2.13	(18)	OCC	1867	22211
	Sus. + R2	143	207		2.56	2.13	(18)	OCC	2751	22211
	Sus. + R3	35	53		2.56	2.13	(18)	OCC	699	22211

ASME B31.3c (1992) CODE COMPLIANCE

Point name	Load combination	In-Pl. Moment (Moments in ft-lb)	Out-Pl. Moment	Torsion Moment	S.I.F In	S.I.F Out	Eq. Load no.	Load type	Code Stress (Stress in psi)	Code Allow.
A17 M	Sus. + R1	110	68		2.56	2.13	(18)	OCC	1519	22211
	Sus. + R2	153	139		2.56	2.13	(18)	OCC	2356	22211
	Sus. + R3	32	38		2.56	2.13	(18)	OCC	555	22211
A17 F-	Sus. + R1	118	66		2.56	2.13	(18)	OCC	1599	22211
	Sus. + R2	152	16		2.56	2.13	(18)	OCC	1873	22211
	Sus. + R3	29	12		2.56	2.13	(18)	OCC	377	22211
A17 F+	Sus. + R1	42	129		1.00	1.00	(18)	OCC	649	22211
	Sus. + R2	44	146		1.00	1.00	(18)	OCC	733	22211
	Sus. + R3	13	29		1.00	1.00	(18)	OCC	151	22211
A18 N-	Sus. + R1	38	130		1.00	1.00	(18)	OCC	649	22211
	Sus. + R2	37	146		1.00	1.00	(18)	OCC	724	22211
	Sus. + R3	13	29		1.00	1.00	(18)	OCC	153	22211
A18 N+	Sus. + R1	130	38		2.56	2.13	(18)	OCC	1642	22211
	Sus. + R2	146	37		2.56	2.13	(18)	OCC	1835	22211
	Sus. + R3	29	13		2.56	2.13	(18)	OCC	382	22211
A18 M	Sus. + R1	128	128		2.56	2.13	(18)	OCC	2043	22211
	Sus. + R2	141	169		2.56	2.13	(18)	OCC	2448	22211
	Sus. + R3	34	40		2.56	2.13	(18)	OCC	590	22211
A18 F-	Sus. + R1	115	144		2.56	2.13	(18)	OCC	2042	22211
	Sus. + R2	126	206		2.56	2.13	(18)	OCC	2617	22211
	Sus. + R3	35	54		2.56	2.13	(18)	OCC	697	22211
A18 F+	Sus. + R1	126	135		1.00	1.00	(18)	OCC	885	22211
	Sus. + R2	235	55		1.00	1.00	(18)	OCC	1159	22211
	Sus. + R3	59	26		1.00	1.00	(18)	OCC	308	22211
A19 N-	Sus. + R1	48	7		1.00	1.00	(18)	OCC	232	22211
	Sus. + R2	41	4		1.00	1.00	(18)	OCC	196	22211
	Sus. + R3	41	4		1.00	1.00	(18)	OCC	197	22211
A19 N+	Sus. + R1	48	7		2.56	2.13	(18)	OCC	592	22211
	Sus. + R2	41	4		2.56	2.13	(18)	OCC	502	22211
	Sus. + R3	41	4		2.56	2.13	(18)	OCC	502	22211
A19 M	Sus. + R1	48	10		2.56	2.13	(18)	OCC	599	22211
	Sus. + R2	60	14		2.56	2.13	(18)	OCC	746	22211
	Sus. + R3	51	13		2.56	2.13	(18)	OCC	640	22211
A19 F-	Sus. + R1	50	12		2.56	2.13	(18)	OCC	623	22211
	Sus. + R2	77	24		2.56	2.13	(18)	OCC	978	22211
	Sus. + R3	60	22		2.56	2.13	(18)	OCC	769	22211

ASME B31.3c (1992) CODE COMPLIANCE

Point name	Load combination	In-Pl. Moment (Moments in ft-lb)	Out-Pl. Moment	Torsion Moment	S.I.F In	S.I.F Out	Eq. no.	Load type	Code Stress (Stress in psi)	Code Allow.
A19 F+	Sus. + R1	50	12		1.00	1.00	(18)	OCC	246	22211
	Sus. + R2	77	24		1.00	1.00	(18)	OCC	388	22211
	Sus. + R3	60	22		1.00	1.00	(18)	OCC	306	22211
A20	Sus. + R1	50	15		1.00	1.00	(18)	OCC	250	22211
	Sus. + R2	80	25		1.00	1.00	(18)	OCC	401	22211
	Sus. + R3	62	22		1.00	1.00	(18)	OCC	317	22211
A21	Sus. + R1	50	20		1.00	1.00	(18)	OCC	261	22211
	Sus. + R2	84	27		1.00	1.00	(18)	OCC	422	22211
	Sus. + R3	66	23		1.00	1.00	(18)	OCC	336	22211
A22	Sus. + R1	52	38		1.00	1.00	(18)	OCC	311	22211
	Sus. + R2	94	32		1.00	1.00	(18)	OCC	477	22211
	Sus. + R3	79	25		1.00	1.00	(18)	OCC	396	22211
*** Segment A end ***										
*** Segment B begin ***										
*** Segment B end ***										
*** Segment C begin ***										
A14	Sus. + R1	4	12		1.22	1.30	(18)	OCC	143	22211
	Sus. + R2	6	15		1.22	1.30	(18)	OCC	182	22211
	Sus. + R3	9	19		1.22	1.30	(18)	OCC	240	22211
C01	Sus. + R1	11	2		1.00	1.00	(18)	OCC	106	22211
	Sus. + R2	14	5		1.00	1.00	(18)	OCC	138	22211
	Sus. + R3	20	9		1.00	1.00	(18)	OCC	199	22211
C01A	Sus. + R1	11	4		1.00	1.00	(18)	OCC	103	22211
	Sus. + R2	13	4		1.00	1.00	(18)	OCC	128	22211
	Sus. + R3	21	10		1.00	1.00	(18)	OCC	210	22211
C02 N-	Sus. + R1	10	9		1.00	1.00	(18)	OCC	123	22211
	Sus. + R2	13	4		1.00	1.00	(18)	OCC	128	22211
	Sus. + R3	23	12		1.00	1.00	(18)	OCC	238	22211
C02 N+	Sus. + R1	10	9		1.78	1.48	(18)	OCC	202	22211
	Sus. + R2	13	4		1.78	1.48	(18)	OCC	224	22211
	Sus. + R3	23	12		1.78	1.48	(18)	OCC	410	22211
C02 M	Sus. + R1	9	3		1.78	1.48	(18)	OCC	150	22211
	Sus. + R2	14	6		1.78	1.48	(18)	OCC	236	22211
	Sus. + R3	24	8		1.78	1.48	(18)	OCC	412	22211

ASME B31.3c (1992) CODE COMPLIANCE

Point name	Load combination	In-Pl. Moment (Moments in ft-lb)	Out-Pl. Moment	Torsion Moment	S.I.F In	S.I.F Out	Eq. no.	Load type	Code Stress (Stress in psi)	Code Allow.
C02 F-	Sus. + R1	7	13		1.78	1.48	(18)	OCC	207	22211
	Sus. + R2	13	10		1.78	1.48	(18)	OCC	243	22211
	Sus. + R3	22	6		1.78	1.48	(18)	OCC	366	22211
C02 F+	Sus. + R1	7	13		1.00	1.00	(18)	OCC	133	22211
	Sus. + R2	13	10		1.00	1.00	(18)	OCC	145	22211
	Sus. + R3	22	6		1.00	1.00	(18)	OCC	208	22211
C03	Sus. + R1	7	13		1.00	1.00	(18)	OCC	132	22211
	Sus. + R2	13	10		1.00	1.00	(18)	OCC	145	22211
	Sus. + R3	22	6		1.00	1.00	(18)	OCC	208	22211
C04	Sus. + R1	5	8		1.00	1.00	(18)	OCC	315	22211
	Sus. + R2	11	8		1.00	1.00	(18)	OCC	441	22211
	Sus. + R3	18	5		1.00	1.00	(18)	OCC	610	22211
C05 N-	Sus. + R1	4	5		1.00	1.00	(18)	OCC	214	22211
	Sus. + R2	11	7		1.00	1.00	(18)	OCC	402	22211
	Sus. + R3	15	6		1.00	1.00	(18)	OCC	532	22211
C05 N+	Sus. + R1	5	4		1.73	1.44	(18)	OCC	344	22211
	Sus. + R2	7	11		1.73	1.44	(18)	OCC	616	22211
	Sus. + R3	6	15		1.73	1.44	(18)	OCC	789	22211
C05 M	Sus. + R1	3	11		1.73	1.44	(18)	OCC	541	22211
	Sus. + R2	5	7		1.73	1.44	(18)	OCC	444	22211
	Sus. + R3	6	18		1.73	1.44	(18)	OCC	910	22211
C05 F-	Sus. + R1	1	14		1.73	1.44	(18)	OCC	669	22211
	Sus. + R2	3	6		1.73	1.44	(18)	OCC	342	22211
	Sus. + R3	4	12		1.73	1.44	(18)	OCC	597	22211
C05 F+	Sus. + R1	1	14		1.00	1.00	(18)	OCC	463	22211
	Sus. + R2	3	6		1.00	1.00	(18)	OCC	229	22211
	Sus. + R3	4	12		1.00	1.00	(18)	OCC	407	22211
C06 N-	Sus. + R1	1	14		1.00	1.00	(18)	OCC	463	22211
	Sus. + R2	3	6		1.00	1.00	(18)	OCC	228	22211
	Sus. + R3	3	12		1.00	1.00	(18)	OCC	406	22211
C06 N+	Sus. + R1	14	1		1.73	1.44	(18)	OCC	800	22211
	Sus. + R2	6	3		1.73	1.44	(18)	OCC	386	22211
	Sus. + R3	12	4		1.73	1.44	(18)	OCC	695	22211
C06 M	Sus. + R1	12	3		1.73	1.44	(18)	OCC	700	22211
	Sus. + R2	6	7		1.73	1.44	(18)	OCC	498	22211
	Sus. + R3	10	9		1.73	1.44	(18)	OCC	689	22211

ASME B31.3c (1992) CODE COMPLIANCE

Point name	Load combination	(Moments in ft-lb) In-Pl. Moment	Out-Pl. Moment	Torsion Moment	S.I.F In	Out	Eq. no.	Load type	(Stress in psi) Code Stress	Code Allow.
C06 F-	Sus. + R1	9	3		1.73	1.44	(18)	OCC	545	22211
	Sus. + R2	5	8		1.73	1.44	(18)	OCC	465	22211
	Sus. + R3	7	10		1.73	1.44	(18)	OCC	602	22211
C06 F+	Sus. + R1	3	9		1.00	1.00	(18)	OCC	320	22211
	Sus. + R2	8	5		1.00	1.00	(18)	OCC	301	22211
	Sus. + R3	10	7		1.00	1.00	(18)	OCC	388	22211
C07	Sus. + R1	0	0		1.00	1.00	(18)	OCC	0	22211
	Sus. + R2	0	0		1.00	1.00	(18)	OCC	0	22211
	Sus. + R3	0	0		1.00	1.00	(18)	OCC	0	22211

*** Segment C end ***

S Y S T E M S U M M A R Y

Maximum displacements (in)

Maximum X :	0.058	Point : A17 F	Load Comb.: RESPONSE
Maximum Y :	0.143	Point : 8	Load Comb.: RESPONSE
Maximum Z :	0.036	Point : C05 F	Load Comb.: RESPONSE
Max. total:	0.153	Point : 8	Load Comb.: RESPONSE

Maximum rotations (deg)

Maximum X :	0.176	Point : 6	Load Comb.: RESPONSE
Maximum Y :	0.109	Point : A19 N	Load Comb.: RESPONSE
Maximum Z :	0.116	Point : B05	Load Comb.: RESPONSE
Max. total:	0.203	Point : B05	Load Comb.: RESPONSE

Maximum restraint forces(lb)

Maximum X :	402	Point : B01	Load Comb.: RESPONSE
Maximum Y :	150	Point : A22	Load Comb.: RESPONSE
Maximum Z :	99	Point : A22	Load Comb.: RESPONSE
Max. total:	404	Point : B01	Load Comb.: RESPONSE

Maximum restraint moments(ft-lb)

Maximum X :	209	Point : A00	Load Comb.: RESPONSE
Maximum Y :	200	Point : A00	Load Comb.: RESPONSE
Maximum Z :	56	Point : A22	Load Comb.: RESPONSE
Max. total:	291	Point : A00	Load Comb.: RESPONSE

S Y S T E M S U M M A R Y

Maximum pipe forces (lb)

Maximum X :	193	Point : A08 F	Load Comb.: RESPONSE
Maximum Y :	203	Point : A04 F	Load Comb.: RESPONSE
Maximum Z :	205	Point : A00	Load Comb.: RESPONSE
Max. total:	246	Point : A00	Load Comb.: RESPONSE

Maximum pipe moments (ft-lb)

Maximum X :	300	Point : A18 N	Load Comb.: RESPONSE
Maximum Y :	258	Point : A08 F	Load Comb.: RESPONSE
Maximum Z :	273	Point : A18 F	Load Comb.: RESPONSE
Max. total:	427	Point : A11	Load Comb.: RESPONSE

S Y S T E M S U M M A R Y

Maximum occasional stress

Point	: A08 F
Stress psi	: 4874
Allowable psi	: 22211
Ratio	: 0.22
Load combination	: Sus. + R1

Maximum occasional stress ratio

Point	: A08 F
Stress psi	: 4874
Allowable psi	: 22211
Ratio	: 0.22
Load combination	: Sus. + R1

* * * The system satisfies ASME B31.3 code requirements * * *
* * * for the selected options * * *

P O I N T D A T A L I S T I N G

POINT NAME	TYPE	-----OFFSETS (ft)----- X	Y	Z	PIPE ID	DESCRIPTION
*** SEGMENT A						
A00	Run	0	0	0	4PIPE	
A01A	Flex	0	0.25	0		Wt= 144 lb , Ar= 3.2 sq.in Axial= 23300000 Tors= 304.0 Y-Shear= RIGID Bend= 2080.0 Z-Shear= RIGID Bend= 2080.0
A01B	Run	0	0.04	0		
A01	Bend	0	0.34	0		Short Elbow, Radius = 4.00 inch Bend angle change = 90.00 deg Mid point at 50.00 percent SIF - In 2.56, Out = 2.13 Flex = 7.908
A02	Run	0	0	-0.81		
A03	Bend	0	0	-0.65		Long Elbow, Radius = 6.00 inch Bend angle change = 90.00 deg Mid point at 50.00 percent SIF - In 1.95, Out = 1.63 Flex = 5.272
A03A	Valv	1.76	0	0		Rating = 350, Weight = 93 lb Surface factor = 4.50, SIF = 1.00
A03B	Run	0.72	0	0		
A04	Run	0.69	0	0		
A05	Run	0.09	0	0		
A06	Run	0.09	0	0		
A07	Bend	0.50	0	0		Long Elbow, Radius = 6.00 inch Bend angle change = 90.00 deg Mid point at 50.00 percent SIF - In 1.95, Out = 1.63 Flex = 5.272
A08	Redu	0	0	0.60		
A09	Run	0	0	0.33	3"PIPE	
A10	Run	0	0	0.63	10	
2	Run	0	0	0.46		
*** SEGMENT B						
3	Run	3.85	0.94	0.56	10	
B00	Run	0	0	0.46	3"PIPE	
B01	Redu	0	0	0.63		
B02	Run	0	0	0.33	4PIPE	
B03	Bend	0	0	1.27		Long Elbow, Radius = 6.00 inch Bend angle change = 90.00 deg Mid point at 50.00 percent SIF - In 1.95, Out = 1.63 Flex = 5.272

P O I N T D A T A L I S T I N G

POINT NAME	TYPE	-----OFFSETS (ft)----- X	Y	Z	PIPE ID	DESCRIPTION
B04	Run	0	0.50	0		
B05	Run	0	0.75	0		
B06	Run	0	2.12	0		
B07	Run	0	1.00	0		
B08	Tee	0	0.35	0		
B09	Bend	0	0.86	0		Long Elbow, Radius = 6.00 inch Bend angle change = 90.00 deg Mid point at 50.00 percent SIF - In 1.95, Out = 1.63 Flex = 5.272
B10	Bend	1.07	0	0		Short Elbow, Radius = 4.00 inch Bend angle change = 90.00 deg Mid point at 50.00 percent SIF - In 2.56, Out = 2.13 Flex = 7.908
B10A	Flex	0	-0.40	0		Wt= 144 lb , Ar= 3.2 sq.in Axial= 23300000 Tors= 304.0 Y-Shear= RIGID Bend= 2080.0 Z-Shear= RIGID Bend= 2080.0
B10B	Run	0	-0.04	0		
B11	Bend	0	-0.69	0		Long Elbow, Radius = 6.00 inch Bend angle change = 90.00 deg Mid point at 50.00 percent SIF - In 1.95, Out = 1.63 Flex = 5.272
B12	Run	0	0	0.50		
*** SEGMENT C						
B08	Tee	3.85	5.66	3.25	2PIPE	
C01	Bend	-0.46	0	0		Short Elbow, Radius = 2.00 inch Bend angle change = 90.00 deg Mid point at 50.00 percent SIF - In 2.27, Out = 1.89 Flex = 6.606
C02	Bend	0	0.54	0		Short Elbow, Radius = 2.00 inch Bend angle change = 90.00 deg Mid point at 50.00 percent SIF - In 2.27, Out = 1.89 Flex = 6.606
C03	Flex	-0.25	0	0		Wt= 87 lb , Ar= 1.1 sq.in Axial= 13500000 Tors= 107.0 Y-Shear= RIGID Bend= 659.0 Z-Shear= RIGID Bend= 659.0

POINT DATA LISTING

POINT NAME	TYPE	OFFSETS (ft) X	Y	Z	PIPE ID	DESCRIPTION
C04	Run	-0.04	0	0		

Total weight of empty pipes : 291 lb

COMPONENT DATA LISTING

POINT NAME	COORDINATE(ft) X	Y	Z	DATA TYPE	DESCRIPTION
*** SEGMENT A					
A00	0.00	0.00	0.00	ANCHOR	Rigid Thermal movements : None
A01A	0.00	0.25	0.00		
A01B	0.00	0.29	0.00		
A01 N	0.00	0.30	0.00		
A01	0.00	0.63	0.00	TI	
A01 M	0.00	0.53	-0.10		
A01 F	0.00	0.63	-0.33		
A02	0.00	0.63	-0.81	GUIDE	ID : A02 1, Connected to Ground Stiffness = RIGID Gap-down = 0.00, Above = 0.06 inch Gap-left = 0.06, Right = 0.06 inch Friction = 0.15 Gaps set Weightless
A03 N	0.00	0.63	-0.96		
A03	0.00	0.63	-1.46	TI	
A03 M	0.15	0.63	-1.31		
A03 F	0.50	0.63	-1.46		
A03A	1.76	0.63	-1.46		
A03B	2.48	0.63	-1.46		
A04	3.17	0.63	-1.46	FLANGE	Weld neck SIF = 1.00 Rating = 400, Weight = 35 lb
A05	3.26	0.63	-1.46	WEIGHT	12 lb , No offsets
A06	3.35	0.63	-1.46	FLANGE	Weld neck SIF = 1.00 Rating = 400, Weight = 35 lb
A07 N	3.35	0.63	-1.46		
A07	3.85	0.63	-1.46	TI	
A07 M	3.70	0.63	-1.31		
A07 F	3.85	0.63	-0.96		
A08	3.85	0.63	-0.86		
A09	3.85	0.63	-0.53	GUIDE	ID : A09 1, Connected to Ground Stiffness = RIGID Gap-down = 0.00, Above = 0.06 inch Gap-left = 0.06, Right = 0.06 inch Friction = 0.00 Gaps set Weightless
A10	3.85	0.63	0.10		
2	3.85	0.63	0.56		
*** SEGMENT B					
3	3.85	0.94	0.56		
B00	3.85	0.94	1.02		
B01	3.85	0.94	1.65	GUIDE	ID : B01 1, Connected to Ground Stiffness = RIGID Gap-down = 0.00, Above = 0.06 inch Gap-left = 0.00, Right = 0.06 inch Friction = 0.00 Gaps set Weightless

C O M P O N E N T D A T A L I S T I N G

POINT NAME	---COORDINATE(ft X	Y	Z)---	DATA TYPE	DESCRIPTION
B02	3.85	0.94	1.98		
B03 N	3.85	0.94	2.75		
B03	3.85	0.94	3.25	TI	
B03 M	3.85	1.09	3.10		
B03 F	3.85	1.44	3.25		
B04	3.85	1.44	3.25		
B05	3.85	2.19	3.25	WEIGHT	27 lb , No offsets
B06	3.85	4.31	3.25		
B07	3.85	5.31	3.25	WEIGHT	35 lb , No offsets
B08	3.85	5.66	3.25	TEE	B16.9 welding tee
					SIF - In = 1.34, Out = 1.45
B09 N	3.85	6.02	3.25		
B09	3.85	6.52	3.25	TI	
B09 M	4.00	6.37	3.25		
B09 F	4.35	6.52	3.25		
B10 N	4.59	6.52	3.25		
B10	4.92	6.52	3.25	TI	
B10 M	4.82	6.42	3.25		
B10 F	4.92	6.19	3.25		
B10A	4.92	6.12	3.25		
B10B	4.92	6.08	3.25		
B11 N	4.92	5.89	3.25		
B11	4.92	5.39	3.25	TI	
B11 M	4.92	5.54	3.40		
B11 F	4.92	5.39	3.75		
B12	4.92	5.39	3.75	ANCHOR	Rigid
					Thermal movements : None
*** SEGMENT C					
B08	3.85	5.66	3.25	TEE	B16.9 welding tee
					SIF - In = 1.34, Out = 1.45
C01 N	3.56	5.66	3.25		
C01	3.39	5.66	3.25	TI	
C01 M	3.44	5.71	3.25		
C01 F	3.39	5.83	3.25		
C02 N	3.39	6.03	3.25		
C02	3.39	6.20	3.25	TI	
C02 M	3.34	6.15	3.25		
C02 F	3.22	6.20	3.25		
C03	3.14	6.20	3.25		
C04	3.10	6.20	3.25		

Number of points in the system : 64

P I P E D A T A L I S T I N G

Pipe ID/ Material	Nom/ Sch	O.D. inch	-----Thickness(inch)----- W.Th.	Corr	Mill	Insu	Ling	Spec Grav	Weight(lb/ft) Pipe	Other	Total
3"PIPE	3.000	3.500	0.216	0.06	0.03	0	0	1.12	7.75	0	11.34
AU	STD										
4PIPE	4	4.500	0.237	0.06	0.03	0	0	1.12	11.04	0	17.22
AU	STD										
2PIPE	2.000	2.375	0.154	0.06	0.02	0	0	1.12	3.74	0	5.37
AU	STD										
10	10	10.750	1.000	0.06	0.13	0	0	1.12	104	0	133
CS	XXS										

M A T E R I A L D A T A L I S T I N G

Material Name	Pipe ID	Density lb/cu.ft	Pois. Ratio	Temper. deg F	Modulus E6 psi	Expans. in/100ft	Allow. psi
AU	4PIPE	501.0	0.30	40.0	28.42		16700.0
				180.0		1.5442	16700.0
AU	3"PIPE	501.0	0.30	40.0	28.42		16700.0
				180.0		1.5442	16700.0
CS	10	489.0	0.30	40.0	29.62		20000.0
				180.0		1.0406	20000.0
AU	2PIPE	501.0	0.30	40.0	28.42		16700.0
				180.0		1.5442	16700.0

FRAME POINT DATA LISTING

POINT NAME	---COORDINATE(ft X	Y	Z)---	DATA TYPE	DESCRIPTION
2	3.85	0.63	0.56		
1	3.85	0.38	0.56	Y-STOP	ID : 1 1, Connected to Ground Gap-Below = 0.00, Above = 0.06 inch Friction = 0.00 Gaps set Weightless
3	3.85	0.94	0.56		
4	3.85	1.44	0.56	WEIGHT	1000 lb , No offsets
5	3.85	3.64	0.56		
6	3.85	5.50	0.56	WEIGHT	2250 lb , Offsets in ft DX = 0.00, DY = 0.00, DZ = 0.04
7	3.85	8.60	0.56		
A02	0.00	0.63	-0.81		
8	5.60	5.50	-1.00	ANCHOR	Rigid Thermal movements : None

BEAM DATA LISTING

BEAM ID		POINT NAME	LENGTH (ft)	SECTION ID/ MATERIAL ID	BETA ANGLE	RIGID END(ft)	RELEASE Ax	Y-Y	Z-Z
M1	From	2	0.25	XS10	0.00	0.00	N	N	N
	To	1		A36		0.00	N	N	N
M2	From	2	0.31	XS10	0.00	0.00	N	N	N
	To	3		A36		0.00	N	N	N
M3	From	3	0.50	XS10	0.00	0.00	N	N	N
	To	4		A36		0.00	N	N	N
M4	From	4	2.20	XS12	0.00	0.00	N	N	N
	To	5		A36		0.00	N	N	N
M5	From	5	1.86	XS12	0.00	0.00	N	N	N
	To	6		A36		0.00	N	N	N
M6	From	6	3.10	XS12	0.00	0.00	N	N	N
	To	7		A36		0.00	N	N	N
M7	From	5	5.08	C3X4.1	0.00	0.00	N	N	N
	To	A02		A36		0.00	N	N	N
M8	From	6	2.34	C3X4.1	0.00	0.00	N	N	N
	To	8		A36		0.00	N	N	N

CROSS SECTION LISTING

Section ID ID	Area(sq.in) Axial	Y-Shear	Z-Shear	Inertia (in**4) Torsion	Y-Y Bend	Z-Z Bend
XS10	16.10	8.05	8.05	424.0	212.0	212.0
XS12	19.20	9.60	9.60	724.0	362.0	362.0
XS12	19.20	9.60	9.60	724.0	362.0	362.0
C3X4.1	1.21	0.51	0.51	0.0	0.2	1.7

BEAM MATERIAL LISTING

MATERIAL ID	Elastic modulus E6 psi	Poissons ratio	Yield Stress psi	Density lb/cu.ft	Expansion E-6 /F	Ultimate stress psi
A36	29.000	0.250	36000	490.00	6.50000	58000

TEMPERATURE AND PRESSURE DATA

POINT NAME	CASE 1 PRESS. psi	CASE 1 TEMPER deg F	CASE 1 EXPAN. in/100ft	CASE 2 PRESS. psi	CASE 2 TEMPER deg F	CASE 2 EXPAN. in/100ft	CASE 3 PRESS. psi	CASE 3 TEMPER deg F	CASE 3 EXPAN. in/100ft
*** SEGMENT A									
A00	325	180	1.544						
A09	325	180	1.544						
A10	325	180	1.041						
2	325	180	1.041						
*** SEGMENT B									
3	325	180	1.041						
B00	325	180	1.544						
B02	325	180	1.544						
B12	325	180	1.544						
*** SEGMENT C									
B08	325	180	1.544						
C04	325	180	1.544						

1CA148M1

A N A L Y S I S S U M M A R Y

Current model revision number : 1

```
Static - Date and Time of analysis ............ Mar 4, 1997   10:27 AM
         Model Revision Number ................ 1
         Number of load cases ................. 2
         Load cases analyzed .................. GR T1
         Gaps/Friction/Yielding considered ..... Yes
         Tolerance - Force, Displacement ...... 100.00 lb   0.0600 in
         Friction - Factor, tolerance ......... 1.00   0.10
         Hanger design run .................... No
         Cut short included ................... No
         Occasional load analysis type ........ Nonlinear
         Non-linear analysis summary file ..... AY02E-R2.LOG
         Base load cases for nonlinear analysis
                                                GR = None
                                                T1 = GR
         Weight of contents included .......... Yes
         Pressure stiffening case ............. 0
         Water elevation for buoyancy loads .... Not considered

Modal  - Date and Time of analysis ............ Mar 4, 1997   10:27 AM
         Model Revision Number ................ 1
         Number of modes ...................... 4
         Cutoff frequency (Hz) ................ 33.0
         Weight of contents included .......... Yes
         Pressure stiffening case ............. 0
         Water elevation for buoyancy loads .... Not considered

Response - Date and Time of analysis ........... Mar 4, 1997   10:27 AM
         Model Revision Number ................ 1
         Number of load cases ................. 3
         Load cases analyzed .................. R1 R2 R3
         Date and time of modal analysis ...... Mar 4, 1997   10:27 AM
         Number of modes ...................... 4
         Cutoff frequency (Hz) ................ 33.0
         Model revision of modal analysis ..... 1
         Weight of contents included .......... Yes
         Pressure stiffening case ............. 0
         Water elevation for buoyancy loads .... Not considered
```


CODE COMPLIANCE COMBINATIONS

Combination	Category	Method	Load	Factor	Allowable	Remarks
GR + Max P	Sustain	Sum	Gravity	1.00	Automatic	Default
			Max Long	1.00		
Cold to T1	Expansion	Sum	Thermal 1	1.00	Automatic	Default
Sus. + R1	Occasion	Abs sum	Response 1	1.00	Automatic	Default
			Max Sus	1.00		
Sus. + R2	Occasion	Abs sum	Response 2	1.00	Automatic	Default
			Max Sus	1.00		
Sus. + R3	Occasion	Abs sum	Response 3	1.00	Automatic	Default
			Max Sus	1.00		
Max P	Hoop		Max Hoop	1.00	Automatic	Default

OTHER USER COMBINATIONS

Combination	Method	Load	Factor	Remarks
GR	Sum	Gravity	1.00	Default
T1	Sum	Thermal 1	1.00	Default
R1	Sum	Response 1	1.00	Default
R2	Sum	Response 2	1.00	Default
R3	Sum	Response 3	1.00	Default
GR+T1	Sum	Gravity	1.00	User
		Thermal 1	1.00	
RESPONSE	SRSS	Response 1	1.00	User
		Response 2	1.00	
		Response 3	1.00	
TOTAL	Abs sum	GR+T1	1.00	User
		RESPONSE	1.00	

CODE COMPLIANCE

```
Y - Factor ............................ 0.40
Weld efficiency factor ................ 0.80
Range reduction factor ................ 1.00
```


1C/14PRINT

```
Design Pressure Factor ............... 1.00
Minimum stress ratio used in reports... 0.00
Include corrosion in stress calcs. .... Y
Include torsion in code stress ........ N
Include axial force in code stress .... N
Longitudinal pressure calculation ..... PD/4t
Include rigorous pressure ............. Not analyzed
```


RESPONSE SPECTRUM LOAD CASES :

Number of load cases analysed : 3

Load case 1 - R1

Missing mass : Yes
ZPA : No

Combination method : SRSS

X- Spectrum : SC1
Multiplier : 1.00

SC1

Freq(Hz)	Grav( )	Freq(Hz)	Grav( )	Freq(Hz)	Grav( )
0.100	0.01	0.160	0.03	0.250	0.06
0.400	0.10	0.600	0.16	1.100	0.28
1.640	0.42	8.000	0.42	12.000	0.34
20.000	0.26	33.000	0.20	100.000	0.20

Load case 2 - R2

Missing mass : Yes
ZPA : No

Combination method : SRSS

Y- Spectrum : SC1
Multiplier : 1.00

SC1

Freq(Hz)	Grav( )	Freq(Hz)	Grav( )	Freq(Hz)	Grav( )
0.100	0.01	0.160	0.03	0.250	0.06
0.400	0.10	0.600	0.16	1.100	0.28
1.640	0.42	8.000	0.42	12.000	0.34
20.000	0.26	33.000	0.20	100.000	0.20

Load case 3 - R3

Missing mass : Yes
ZPA : No

Combination method : SRSS

Z- Spectrum : SC1
Multiplier : 1.00

SC1

Freq(Hz)	Grav( )	Freq(Hz)	Grav( )	Freq(Hz)	Grav( )
0.100	0.01	0.160	0.03	0.250	0.06
0.400	0.10	0.600	0.16	1.100	0.28
1.640	0.42	8.000	0.42	12.000	0.34
20.000	0.26	33.000	0.20	100.000	0.20

F R E Q U E N C I E S

Mode Number	Frequency (Rads/sec)	Frequency (Hertz)	Period (Sec)	Participation factors X	Y	Z
1	75.5913	12.0307	0.083	-0.013	0.065	-1.079
2	110.5581	17.5959	0.057	-0.930	0.025	-2.747
3	122.1752	19.4448	0.051	1.476	0.063	0.491
4	139.4641	22.1964	0.045	0.452	0.559	0.054

D I S P L A C E M E N T S

Point name	Load combination	TRANSLATIONS (in) X	Y	Z	ROTATIONS (deg) X	Y	Z
*** Segment A begin ***							
A00	GR	0.000	0.000	0.000	0.000	0.000	0.000
	T1	0.000	0.000	0.000	0.000	0.000	0.000
	GR+T1	0.000	0.000	0.000	0.000	0.000	0.000
	RESPONSE	0.000	0.000	0.000	0.000	0.000	0.000
	TOTAL	0.000	0.000	0.000	0.000	0.000	0.000
A01A	GR	0.000	0.000	0.000	0.000	0.000	0.000
	T1	0.000	0.004	0.000	-0.001	0.000	0.000
	GR+T1	0.000	0.004	0.000	-0.001	0.000	0.000
	RESPONSE	0.000	0.000	0.000	0.001	0.000	0.000
	TOTAL	0.000	0.004	0.000	0.002	0.000	0.000
A01B	GR	0.000	0.000	0.000	0.001	0.007	-0.001
	T1	0.000	0.004	0.000	-0.039	0.080	-0.002
	GR+T1	0.000	0.004	0.000	-0.038	0.087	-0.004
	RESPONSE	0.000	0.000	0.000	0.010	0.000	0.005
	TOTAL	0.000	0.004	0.000	0.048	0.087	0.009
A01 N	GR	0.000	0.000	0.000	0.001	0.007	-0.001
	T1	0.000	0.004	0.000	-0.039	0.080	-0.002
	GR+T1	0.000	0.004	0.000	-0.038	0.087	-0.004
	RESPONSE	0.000	0.000	0.000	0.010	0.000	0.005
	TOTAL	0.000	0.004	0.000	0.048	0.087	0.009
A01 M	GR	0.000	0.000	0.000	0.001	0.007	-0.002
	T1	-0.002	0.007	-0.004	-0.044	0.080	-0.004
	GR+T1	-0.002	0.007	-0.004	-0.043	0.086	-0.006
	RESPONSE	0.000	0.000	0.001	0.006	0.001	0.004
	TOTAL	0.002	0.007	0.004	0.049	0.087	0.010
A01 F	GR	0.000	0.000	0.000	0.000	0.006	-0.002
	T1	-0.005	0.006	-0.008	-0.044	0.078	-0.005
	GR+T1	-0.006	0.006	-0.008	-0.044	0.084	-0.008
	RESPONSE	0.000	0.000	0.001	0.001	0.003	0.003
	TOTAL	0.006	0.006	0.009	0.045	0.087	0.011
A02	GR	-0.001	0.000	0.000	-0.001	0.006	-0.003
	T1	-0.013	0.002	-0.016	-0.042	0.076	-0.007
	GR+T1	-0.014	0.002	-0.016	-0.043	0.082	-0.010
	RESPONSE	0.000	0.000	0.001	0.002	0.004	0.003
	TOTAL	0.014	0.002	0.016	0.045	0.087	0.012

D I S P L A C E M E N T S

Point name	Load combination	TRANSLATIONS (in) X	Y	Z	ROTATIONS (deg) X	Y	Z
A03 N	GR	-0.001	0.000	0.000	-0.002	0.006	-0.003
	T1	-0.016	0.000	-0.018	-0.041	0.076	-0.007
	GR+T1	-0.017	0.000	-0.018	-0.043	0.081	-0.010
	RESPONSE	0.000	0.000	0.001	0.002	0.005	0.002
	TOTAL	0.017	0.000	0.019	0.045	0.086	0.012
A03 M	GR	-0.001	0.000	0.000	-0.005	0.004	-0.004
	T1	-0.018	-0.003	-0.026	-0.032	0.063	-0.004
	GR+T1	-0.020	-0.003	-0.026	-0.037	0.066	-0.008
	RESPONSE	0.001	0.000	0.001	0.002	0.011	0.002
	TOTAL	0.021	0.003	0.027	0.039	0.077	0.010
A03 F	GR	-0.002	-0.001	0.000	-0.006	0.002	-0.004
	T1	-0.015	-0.004	-0.032	-0.027	0.043	0.001
	GR+T1	-0.016	-0.005	-0.032	-0.033	0.045	-0.003
	RESPONSE	0.001	0.000	0.002	0.002	0.015	0.002
	TOTAL	0.017	0.005	0.034	0.035	0.060	0.005
A03A	GR	-0.002	-0.002	-0.001	-0.007	0.001	-0.001
	T1	0.005	-0.003	-0.041	-0.018	0.028	0.003
	GR+T1	0.003	-0.005	-0.042	-0.025	0.029	0.002
	RESPONSE	0.001	0.001	0.006	0.003	0.015	0.001
	TOTAL	0.004	0.006	0.048	0.028	0.043	0.003
A03B	GR	-0.002	-0.002	-0.001	-0.007	0.001	-0.001
	T1	0.016	-0.003	-0.046	-0.018	0.028	0.003
	GR+T1	0.014	-0.005	-0.046	-0.025	0.029	0.002
	RESPONSE	0.001	0.001	0.008	0.003	0.015	0.001
	TOTAL	0.015	0.005	0.054	0.028	0.043	0.003
A04	GR	-0.002	-0.002	-0.001	-0.008	0.001	0.002
	T1	0.026	-0.002	-0.049	-0.014	0.015	0.005
	GR+T1	0.025	-0.004	-0.050	-0.021	0.016	0.007
	RESPONSE	0.001	0.001	0.010	0.003	0.013	0.001
	TOTAL	0.026	0.005	0.060	0.024	0.029	0.007
A05	GR	-0.002	-0.002	-0.001	-0.008	0.001	0.002
	T1	0.028	-0.002	-0.049	-0.013	0.013	0.005
	GR+T1	0.026	-0.004	-0.050	-0.021	0.014	0.007
	RESPONSE	0.001	0.001	0.010	0.003	0.013	0.001
	TOTAL	0.027	0.005	0.060	0.024	0.027	0.008

D I S P L A C E M E N T S

Point name	Load combination	TRANSLATIONS (in) X	Y	Z	ROTATIONS (deg) X	Y	Z
A06	GR	-0.002	-0.002	-0.001	-0.008	0.001	0.002
	T1	0.029	-0.002	-0.049	-0.012	0.011	0.006
	GR+T1	0.028	-0.004	-0.050	-0.020	0.012	0.008
	RESPONSE	0.001	0.001	0.011	0.003	0.013	0.001
	TOTAL	0.029	0.005	0.061	0.024	0.025	0.009
A07 N	GR	-0.002	-0.002	-0.001	-0.008	0.001	0.002
	T1	0.029	-0.002	-0.049	-0.012	0.011	0.006
	GR+T1	0.028	-0.004	-0.050	-0.020	0.012	0.008
	RESPONSE	0.001	0.001	0.011	0.003	0.013	0.001
	TOTAL	0.029	0.005	0.061	0.024	0.025	0.009
A07 M	GR	-0.002	-0.001	-0.001	-0.008	0.001	0.004
	T1	0.034	-0.001	-0.046	-0.010	-0.031	0.010
	GR+T1	0.033	-0.002	-0.047	-0.019	-0.030	0.014
	RESPONSE	0.001	0.001	0.011	0.004	0.008	0.001
	TOTAL	0.033	0.003	0.059	0.022	0.038	0.015
A07 F	GR	-0.001	0.000	-0.001	-0.006	0.002	0.003
	T1	0.032	0.000	-0.039	-0.003	-0.071	0.011
	GR+T1	0.031	-0.001	-0.041	-0.009	-0.069	0.014
	RESPONSE	0.000	0.000	0.012	0.005	0.005	0.002
	TOTAL	0.032	0.001	0.052	0.014	0.074	0.015
A08	GR	-0.001	0.000	-0.001	-0.006	0.002	0.003
	T1	0.031	0.000	-0.038	-0.003	-0.072	0.011
	GR+T1	0.030	0.000	-0.039	-0.008	-0.071	0.014
	RESPONSE	0.000	0.000	0.012	0.005	0.005	0.002
	TOTAL	0.030	0.001	0.051	0.013	0.076	0.016
A09	GR	-0.001	0.000	-0.001	-0.004	0.002	0.002
	T1	0.026	0.000	-0.033	-0.001	-0.080	0.014
	GR+T1	0.024	0.000	-0.034	-0.004	-0.078	0.016
	RESPONSE	0.000	0.000	0.012	0.005	0.005	0.002
	TOTAL	0.024	0.000	0.046	0.009	0.083	0.018
A10	GR	-0.001	0.000	-0.001	0.000	0.003	0.000
	T1	0.014	0.000	-0.023	-0.003	-0.099	0.022
	GR+T1	0.013	0.000	-0.024	-0.003	-0.096	0.022
	RESPONSE	0.001	0.001	0.012	0.006	0.001	0.003
	TOTAL	0.013	0.001	0.036	0.009	0.097	0.026

D I S P L A C E M E N T S

Point name	Load combination	TRANSLATIONS (in) X	Y	Z	ROTATIONS (deg) X	Y	Z
2	GR	-0.001	0.000	-0.001	0.000	0.003	0.000
	T1	0.004	0.000	-0.018	-0.003	-0.099	0.023
	GR+T1	0.003	0.000	-0.019	-0.003	-0.096	0.022
	RESPONSE	0.001	0.000	0.012	0.006	0.001	0.003
	TOTAL	0.004	0.000	0.031	0.009	0.097	0.026
*** Segment A end ***							
*** Segment B begin ***							
3	GR	-0.001	0.000	-0.001	0.000	0.003	0.000
	T1	0.003	0.000	-0.019	-0.003	-0.099	0.023
	GR+T1	0.002	0.000	-0.020	-0.003	-0.096	0.022
	RESPONSE	0.001	0.000	0.011	0.007	0.001	0.003
	TOTAL	0.002	0.000	0.031	0.010	0.097	0.026
B00	GR	0.000	0.000	-0.001	0.000	0.003	0.000
	T1	-0.007	0.000	-0.014	-0.003	-0.099	0.023
	GR+T1	-0.007	0.000	-0.015	-0.003	-0.096	0.022
	RESPONSE	0.001	0.001	0.011	0.006	0.001	0.003
	TOTAL	0.008	0.001	0.026	0.010	0.097	0.026
B01	GR	0.000	0.000	-0.001	0.006	0.005	0.000
	T1	-0.020	0.000	-0.004	0.035	-0.106	0.014
	GR+T1	-0.020	0.000	-0.005	0.041	-0.101	0.014
	RESPONSE	0.000	0.000	0.011	0.005	0.008	0.004
	TOTAL	0.020	0.000	0.016	0.046	0.109	0.018
B02	GR	0.000	-0.001	-0.001	0.010	0.006	0.000
	T1	-0.028	-0.003	0.001	0.054	-0.107	0.012
	GR+T1	-0.027	-0.004	0.000	0.064	-0.101	0.011
	RESPONSE	0.001	0.000	0.011	0.005	0.011	0.004
	TOTAL	0.028	0.004	0.011	0.069	0.111	0.015
B03 N	GR	0.001	-0.003	-0.001	0.013	0.007	-0.001
	T1	-0.045	-0.014	0.013	0.064	-0.106	0.008
	GR+T1	-0.044	-0.017	0.012	0.077	-0.099	0.007
	RESPONSE	0.003	0.001	0.011	0.006	0.015	0.005
	TOTAL	0.046	0.018	0.023	0.083	0.114	0.012
B03 M	GR	0.002	-0.004	-0.001	0.012	0.008	-0.001
	T1	-0.053	-0.016	0.020	0.041	-0.096	0.002
	GR+T1	-0.051	-0.020	0.019	0.052	-0.087	0.001
	RESPONSE	0.004	0.002	0.011	0.010	0.025	0.004
	TOTAL	0.055	0.021	0.031	0.062	0.113	0.004

D I S P L A C E M E N T S

Point name	Load combination	TRANSLATIONS (in) X	Y	Z	ROTATIONS (deg) X	Y	Z
B03 F	GR	0.002	-0.004	0.000	0.007	0.008	-0.001
	T1	-0.055	-0.011	0.024	-0.004	-0.088	-0.012
	GR+T1	-0.053	-0.015	0.024	0.003	-0.080	-0.013
	RESPONSE	0.005	0.002	0.011	0.015	0.029	0.003
	TOTAL	0.058	0.017	0.035	0.018	0.109	0.016
B04	GR	0.002	-0.004	0.000	0.006	0.008	-0.001
	T1	-0.055	-0.011	0.024	-0.004	-0.088	-0.012
	GR+T1	-0.053	-0.015	0.024	0.003	-0.080	-0.013
	RESPONSE	0.005	0.002	0.011	0.015	0.029	0.003
	TOTAL	0.058	0.017	0.035	0.018	0.109	0.016
B05	GR	0.002	-0.004	0.001	0.005	0.009	0.000
	T1	-0.053	0.000	0.022	-0.019	-0.082	-0.019
	GR+T1	-0.051	-0.004	0.023	-0.015	-0.073	-0.019
	RESPONSE	0.004	0.002	0.010	0.017	0.035	0.004
	TOTAL	0.055	0.006	0.033	0.032	0.108	0.023
B06	GR	0.002	-0.004	0.002	0.001	0.010	0.004
	T1	-0.037	0.033	0.006	-0.045	-0.064	-0.057
	GR+T1	-0.036	0.028	0.008	-0.044	-0.054	-0.053
	RESPONSE	0.003	0.002	0.012	0.021	0.052	0.006
	TOTAL	0.038	0.030	0.020	0.065	0.107	0.059
B07	GR	0.001	-0.004	0.002	0.000	0.011	0.007
	T1	-0.023	0.048	-0.004	-0.048	-0.056	-0.084
	GR+T1	-0.022	0.044	-0.002	-0.049	-0.045	-0.076
	RESPONSE	0.002	0.002	0.014	0.021	0.060	0.007
	TOTAL	0.024	0.046	0.016	0.070	0.106	0.083
B08	GR	0.000	-0.004	0.002	0.000	0.011	0.009
	T1	-0.016	0.053	-0.007	-0.048	-0.053	-0.094
	GR+T1	-0.016	0.049	-0.005	-0.049	-0.042	-0.085
	RESPONSE	0.001	0.002	0.016	0.021	0.063	0.008
	TOTAL	0.018	0.051	0.021	0.070	0.106	0.093
B09 N	GR	-0.001	-0.004	0.002	-0.001	0.011	0.010
	T1	-0.009	0.059	-0.011	-0.047	-0.050	-0.106
	GR+T1	-0.010	0.055	-0.009	-0.048	-0.039	-0.097
	RESPONSE	0.001	0.002	0.017	0.021	0.065	0.008
	TOTAL	0.011	0.056	0.026	0.068	0.104	0.105

1-C-14-PRINT

D I S P L A C E M E N T S

Point name	Load combination	TRANSLATIONS (in) X	Y	Z	ROTATIONS (deg) X	Y	Z
B09 M	GR	-0.002	-0.004	0.002	-0.001	0.012	0.014
	T1	0.004	0.059	-0.013	-0.042	-0.048	-0.175
	GR+T1	0.002	0.056	-0.011	-0.043	-0.037	-0.161
	RESPONSE	0.001	0.002	0.016	0.019	0.067	0.009
	TOTAL	0.004	0.057	0.027	0.062	0.104	0.170
B09 F	GR	-0.002	-0.003	0.001	-0.001	0.012	0.017
	T1	0.015	0.046	-0.011	-0.039	-0.043	-0.222
	GR+T1	0.013	0.044	-0.010	-0.040	-0.031	-0.205
	RESPONSE	0.002	0.001	0.011	0.018	0.070	0.010
	TOTAL	0.015	0.045	0.021	0.059	0.102	0.215
B10 N	GR	-0.002	-0.002	0.000	-0.001	0.012	0.017
	T1	0.019	0.035	-0.009	-0.037	-0.043	-0.224
	GR+T1	0.017	0.033	-0.009	-0.038	-0.030	-0.207
	RESPONSE	0.002	0.001	0.008	0.019	0.071	0.010
	TOTAL	0.018	0.034	0.016	0.057	0.101	0.217
B10 M	GR	-0.002	-0.001	-0.001	-0.001	0.012	0.017
	T1	0.018	0.022	-0.006	-0.032	-0.037	-0.221
	GR+T1	0.016	0.022	-0.006	-0.034	-0.025	-0.204
	RESPONSE	0.001	0.000	0.004	0.019	0.071	0.010
	TOTAL	0.018	0.022	0.010	0.052	0.096	0.214
B10 F	GR	-0.001	0.000	-0.001	-0.002	0.012	0.016
	T1	0.009	0.014	-0.004	-0.023	-0.033	-0.200
	GR+T1	0.008	0.014	-0.005	-0.024	-0.021	-0.185
	RESPONSE	0.001	0.001	0.002	0.019	0.071	0.009
	TOTAL	0.009	0.014	0.006	0.043	0.093	0.194
B10A	GR	-0.001	0.000	-0.001	-0.002	0.012	0.016
	T1	0.006	0.013	-0.004	-0.022	-0.033	-0.199
	GR+T1	0.005	0.013	-0.004	-0.024	-0.021	-0.184
	RESPONSE	0.001	0.001	0.002	0.019	0.071	0.009
	TOTAL	0.006	0.013	0.006	0.043	0.092	0.193
B10B	GR	-0.001	0.000	-0.001	-0.005	0.002	0.004
	T1	0.005	0.013	-0.004	0.028	-0.020	-0.044
	GR+T1	0.004	0.013	-0.004	0.023	-0.018	-0.040
	RESPONSE	0.001	0.001	0.001	0.012	0.005	0.005
	TOTAL	0.005	0.013	0.006	0.035	0.023	0.046

D I S P L A C E M E N T S

Point name	Load combination	TRANSLATIONS (in) X	Y	Z	ROTATIONS (deg) X	Y	Z
B11 N	GR	0.000	0.000	-0.001	-0.005	0.002	0.004
	T1	0.003	0.010	-0.005	0.029	-0.020	-0.042
	GR+T1	0.003	0.010	-0.005	0.024	-0.018	-0.038
	RESPONSE	0.001	0.001	0.001	0.012	0.005	0.005
	TOTAL	0.004	0.010	0.006	0.036	0.023	0.043
B11 M	GR	0.000	0.000	0.000	-0.005	0.002	0.001
	T1	0.001	0.004	-0.005	0.028	-0.012	-0.014
	GR+T1	0.001	0.003	-0.005	0.023	-0.011	-0.013
	RESPONSE	0.000	0.000	0.000	0.007	0.004	0.003
	TOTAL	0.001	0.004	0.005	0.030	0.014	0.015
B11 F	GR	0.000	0.000	0.000	0.000	0.000	0.000
	T1	0.000	0.000	0.000	0.000	0.000	0.000
	GR+T1	0.000	0.000	0.000	0.000	0.000	0.000
	RESPONSE	0.000	0.000	0.000	0.000	0.000	0.000
	TOTAL	0.000	0.000	0.000	0.000	0.000	0.000
B12	GR	0.000	0.000	0.000	0.000	0.000	0.000
	T1	0.000	0.000	0.000	0.000	0.000	0.000
	GR+T1	0.000	0.000	0.000	0.000	0.000	0.000
	RESPONSE	0.000	0.000	0.000	0.000	0.000	0.000
	TOTAL	0.000	0.000	0.000	0.000	0.000	0.000

*** Segment B end ***

*** Segment C begin ***

Point name	Load combination	TRANSLATIONS (in) X	Y	Z	ROTATIONS (deg) X	Y	Z
B08	GR	0.000	-0.004	0.002	0.000	0.011	0.009
	T1	-0.016	0.053	-0.007	-0.048	-0.053	-0.094
	GR+T1	-0.016	0.049	-0.005	-0.049	-0.042	-0.085
	RESPONSE	0.001	0.002	0.016	0.021	0.063	0.008
	TOTAL	0.018	0.051	0.021	0.070	0.106	0.093
C01 N	GR	0.000	-0.005	0.003	0.000	0.011	0.016
	T1	-0.021	0.059	-0.011	-0.048	-0.053	-0.094
	GR+T1	-0.021	0.054	-0.008	-0.049	-0.042	-0.079
	RESPONSE	0.001	0.002	0.020	0.029	0.070	0.011
	TOTAL	0.022	0.057	0.028	0.078	0.113	0.090
C01 M	GR	0.000	-0.005	0.003	0.000	0.011	0.028
	T1	-0.022	0.062	-0.012	-0.048	-0.053	-0.094
	GR+T1	-0.022	0.057	-0.009	-0.049	-0.042	-0.066
	RESPONSE	0.001	0.003	0.022	0.038	0.086	0.021
	TOTAL	0.023	0.059	0.031	0.087	0.129	0.087

D I S P L A C E M E N T S

Point name	Load combination	TRANSLATIONS (in) X	Y	Z	ROTATIONS (deg) X	Y	Z
C01 F	GR	-0.001	-0.006	0.003	0.000	0.011	0.038
	T1	-0.020	0.065	-0.014	-0.048	-0.053	-0.094
	GR+T1	-0.021	0.059	-0.011	-0.049	-0.042	-0.057
	RESPONSE	0.002	0.003	0.024	0.054	0.094	0.030
	TOTAL	0.023	0.062	0.035	0.102	0.136	0.087
C02 N	GR	-0.003	-0.006	0.003	0.000	0.011	0.040
	T1	-0.016	0.068	-0.016	-0.048	-0.053	-0.094
	GR+T1	-0.019	0.062	-0.013	-0.049	-0.042	-0.055
	RESPONSE	0.003	0.003	0.026	0.056	0.097	0.032
	TOTAL	0.022	0.065	0.039	0.105	0.139	0.086
C02 M	GR	-0.004	-0.006	0.003	0.000	0.011	0.048
	T1	-0.015	0.071	-0.018	-0.048	-0.053	-0.094
	GR+T1	-0.018	0.065	-0.015	-0.049	-0.042	-0.046
	RESPONSE	0.004	0.003	0.029	0.061	0.101	0.036
	TOTAL	0.022	0.068	0.043	0.110	0.143	0.082
C02 F	GR	-0.004	-0.008	0.003	0.000	0.011	0.054
	T1	-0.015	0.074	-0.020	-0.048	-0.053	-0.094
	GR+T1	-0.020	0.066	-0.016	-0.049	-0.042	-0.041
	RESPONSE	0.004	0.004	0.032	0.063	0.106	0.039
	TOTAL	0.024	0.070	0.048	0.112	0.148	0.079
C03	GR	-0.004	-0.008	0.004	0.000	0.011	0.054
	T1	-0.017	0.076	-0.021	-0.048	-0.053	-0.094
	GR+T1	-0.021	0.067	-0.017	-0.049	-0.042	-0.041
	RESPONSE	0.004	0.005	0.034	0.063	0.106	0.039
	TOTAL	0.025	0.072	0.051	0.112	0.148	0.079
C04	GR	-0.004	-0.009	0.004	0.000	0.011	0.055
	T1	-0.017	0.076	-0.021	-0.048	-0.053	-0.094
	GR+T1	-0.021	0.067	-0.017	-0.049	-0.042	-0.039
	RESPONSE	0.004	0.005	0.035	0.063	0.107	0.039
	TOTAL	0.025	0.072	0.052	0.112	0.150	0.079
*** Segment C end ***							
2	GR	-0.001	0.000	-0.001	0.000	0.003	0.000
	T1	0.004	0.000	-0.018	-0.003	-0.099	0.023
	GR+T1	0.003	0.000	-0.019	-0.003	-0.096	0.022
	RESPONSE	0.001	0.000	0.012	0.006	0.001	0.003
	TOTAL	0.004	0.000	0.031	0.009	0.097	0.026

D I S P L A C E M E N T S

Point name	Load combination	TRANSLATIONS (in) X	Y	Z	ROTATIONS (deg) X	Y	Z
1	GR	-0.001	0.000	-0.001	0.000	0.003	0.000
	T1	0.005	0.000	-0.018	-0.003	-0.099	0.023
	GR+T1	0.005	0.000	-0.019	-0.003	-0.096	0.022
	RESPONSE	0.001	0.000	0.012	0.006	0.001	0.003
	TOTAL	0.005	0.000	0.031	0.009	0.097	0.026
3	GR	-0.001	0.000	-0.001	0.000	0.003	0.000
	T1	0.003	0.000	-0.019	-0.003	-0.099	0.023
	GR+T1	0.002	0.000	-0.020	-0.003	-0.096	0.022
	RESPONSE	0.001	0.000	0.011	0.007	0.001	0.003
	TOTAL	0.002	0.000	0.031	0.010	0.097	0.026
4	GR	-0.001	0.000	-0.001	0.000	0.003	0.000
	T1	0.000	0.000	-0.019	-0.003	-0.099	0.023
	GR+T1	0.000	0.000	-0.020	-0.003	-0.096	0.022
	RESPONSE	0.000	0.000	0.011	0.008	0.001	0.004
	TOTAL	0.001	0.000	0.030	0.010	0.097	0.026
5	GR	-0.001	0.000	-0.001	0.001	0.003	0.000
	T1	-0.010	0.000	-0.020	-0.003	-0.099	0.023
	GR+T1	-0.011	0.000	-0.021	-0.002	-0.096	0.022
	RESPONSE	0.002	0.000	0.007	0.009	0.001	0.005
	TOTAL	0.012	0.000	0.028	0.011	0.097	0.027
6	GR	0.000	0.000	0.000	0.001	0.002	0.000
	T1	-0.019	0.000	-0.021	-0.003	-0.099	0.023
	GR+T1	-0.019	0.000	-0.022	-0.002	-0.096	0.022
	RESPONSE	0.004	0.000	0.005	0.009	0.001	0.006
	TOTAL	0.023	0.000	0.027	0.012	0.097	0.028
7	GR	0.000	0.000	0.000	0.001	0.002	0.000
	T1	-0.034	0.000	-0.023	-0.003	-0.099	0.023
	GR+T1	-0.034	0.000	-0.023	-0.002	-0.096	0.022
	RESPONSE	0.008	0.000	0.007	0.009	0.001	0.006
	TOTAL	0.042	0.000	0.030	0.012	0.097	0.028
A02	GR	-0.001	0.000	0.000	-0.001	0.006	-0.003
	T1	-0.013	0.002	-0.016	-0.042	0.076	-0.007
	GR+T1	-0.014	0.002	-0.016	-0.043	0.082	-0.010
	RESPONSE	0.000	0.000	0.001	0.002	0.004	0.003
	TOTAL	0.014	0.002	0.016	0.045	0.087	0.012

D I S P L A C E M E N T S

Point name	Load combination	TRANSLATIONS (in) X	Y	Z	ROTATIONS (deg) X	Y	Z
8	GR	0.000	0.000	0.000	0.000	0.000	0.000
	T1	0.000	0.000	0.000	0.000	0.000	0.000
	GR+T1	0.000	0.000	0.000	0.000	0.000	0.000
	RESPONSE	0.000	0.000	0.000	0.000	0.000	0.000
	TOTAL	0.000	0.000	0.000	0.000	0.000	0.000

S U P P O R T F O R C E S

Point/ Supp. ID	Connect/ Type	Load Combination	LOCAL Dirn	LOCAL Force	LOCAL Deform	GLOBAL Dirn	GLOBAL Force	GLOBAL Deform
A02		GR	down	216	0.000	X		-0.001
A02 1	Guide		left		0.001	Y	-216	0.000
Stiff	:RIGID					Z		0.000
		T1	up	216	0.002	X		-0.013
			left		0.013	Y	216	0.002
						Z		-0.016
		GR+T1	up		0.002	X		-0.014
			left		0.014	Y		0.002
						Z		-0.016
		RESPONSE	down	1160	0.000	X	1388	0.000
			left	1388	0.000	Y	1160	0.000
						Z		0.001
		TOTAL	down	1160	0.002	X	1388	0.014
			left	1388	0.014	Y	1160	0.002
						Z		0.016
A09		GR	down	361	0.000	X		-0.001
A09 1	Guide		rght		0.001	Y	-361	0.000
Stiff	:RIGID					Z		-0.001
		T1	down	461	0.000	X		0.026
			left		0.026	Y	-461	0.000
						Z		-0.033
		GR+T1	down	822	0.000	X		0.024
			left		0.024	Y	-822	0.000
						Z		-0.034
		RESPONSE	down	633	0.000	X	347	0.000
			left	347	0.000	Y	633	0.000
						Z		0.012
		TOTAL	down	1455	0.000	X	347	0.024
			left	347	0.024	Y	1455	0.000
						Z		0.046
B01		GR	down	670	0.000	X	48	0.000
B01 1	Guide		left	48	0.000	Y	-670	0.000
Stiff	:RIGID					Z		-0.001
		T1	down	2709	0.000	X	-48	-0.020
			rght	48	0.020	Y	-2709	0.000
						Z		-0.004

SUPPORT FORCES

Point/ Supp. ID	Connect/ Type	Load Combination	LOCAL Dirn	LOCAL Force	LOCAL Deform	GLOBAL Dirn	GLOBAL Force	GLOBAL Deform
		GR+T1	down	3379	0.000	X		-0.020
			rght		0.020	Y	-3379	0.000
						Z		-0.005
		RESPONSE	down	714	0.000	X	284	0.000
			left	284	0.000	Y	714	0.000
						Z		0.011
		TOTAL	down	4093	0.000	X	284	0.020
			left	284	0.020	Y	4093	0.000
						Z		0.016
1		GR	down	3248	0.000	X		-0.001
1 1	Y - Stop					Y	-3248	0.000
Stiff	:RIGID					Z		-0.001
		T1	up	2031	0.000	X		0.005
						Y	2031	0.000
						Z		-0.018
		GR+T1	down	1217	0.000	X		0.005
						Y	-1217	0.000
						Z		-0.019
		RESPONSE	down	1161	0.000	X		0.001
						Y	1161	0.000
						Z		0.012
		TOTAL	down	2378	0.000	X		0.005
						Y	2378	0.000
						Z		0.031

RESTRAINT REACTIONS

Point name	Load combination	FORCES (lb) X	Y	Z	Result	MOMENTS (ft-lb) X	Y	Z	Result
A00	Anchor								
	GR	-33	-67	-1	75	2	2	6	6
	T1	-158	-262	-74	315	-99	24	37	108
	GR+T1	-190	-330	-75	388	-97	26	43	109
	RESPONSE	133	221	477	542	147	0	45	154
	TOTAL	323	551	552	844	244	26	88	261
A02	Guide								
	GR	0	-216	0	216	0	0	0	0
	T1	0	216	0	216	0	0	0	0
	GR+T1	0	0	0	0	0	0	0	0
	RESPONSE	1388	1160	0	1809	0	0	0	0
	TOTAL	1388	1160	0	1809	0	0	0	0
A09	Guide								
	GR	0	-361	0	361	0	0	0	0
	T1	0	-461	0	461	0	0	0	0
	GR+T1	0	-822	0	822	0	0	0	0
	RESPONSE	347	633	0	722	0	0	0	0
	TOTAL	347	1455	0	1496	0	0	0	0
B01	Guide								
	GR	48	-670	0	672	0	0	0	0
	T1	-48	-2709	0	2710	0	0	0	0
	GR+T1	0	-3379	0	3379	0	0	0	0
	RESPONSE	284	714	0	768	0	0	0	0
	TOTAL	284	4093	0	4102	0	0	0	0
B12	Anchor								
	GR	-23	-243	13	245	-103	14	40	112
	T1	147	1108	144	1127	553	-78	-427	703
	GR+T1	125	865	157	888	449	-63	-387	596
	RESPONSE	102	86	125	183	94	53	68	128
	TOTAL	227	950	282	1017	543	117	456	719
1	Y - Stop								
	GR	0	-3248	0	3248	0	0	0	0
	T1	0	2031	0	2031	0	0	0	0
	GR+T1	0	-1217	0	1217	0	0	0	0
	RESPONSE	0	1161	0	1161	0	0	0	0
	TOTAL	0	2378	0	2378	0	0	0	0

RESTRAINT REACTIONS

Point name	Load combination	FORCES (lb) X	Y	Z	Result	MOMENTS (ft-lb) X	Y	Z	Result
8	Anchor								
	GR	8	-10	-12	18	6	-4	7	10
	T1	58	78	-70	120	-32	-46	-45	72
	GR+T1	65	68	-82	125	-27	-49	-38	68
	RESPONSE	580	52	533	789	23	23	32	46
	TOTAL	645	121	615	899	50	73	70	113

LOCAL FORCES & MOMENTS

Point name	Load combination	FORCES (lb) X	Y	Z	Result	MOMENTS (ft-lb) X	Y	Z	Result
*** Segment A begin ***									
A00	GR	67	1	33	75	-2	-6	-2	6
	T1	262	74	158	315	-24	-37	99	108
	GR+T1	330	75	190	388	-26	-43	97	109
	RESPONSE	221	477	133	542	0	45	147	154
	TOTAL	551	552	323	844	26	88	244	261
A01A	GR	-81	1	33	87	-2	2	-2	4
	T1	262	74	158	315	-24	2	80	84
	GR+T1	182	75	190	273	-26	5	78	83
	RESPONSE	217	473	123	535	0	12	28	31
	TOTAL	399	549	313	747	26	17	106	111
A01B	GR	-81	1	33	87	-2	4	-2	5
	T1	262	74	158	315	-24	8	77	81
	GR+T1	182	75	190	273	-26	12	75	81
	RESPONSE	218	471	120	533	0	8	9	12
	TOTAL	399	547	310	745	26	20	85	91
A01 N	GR	-81	-1	-33	87	-2	-4	2	5
	T1	262	-74	-158	315	-24	-9	-77	81
	GR+T1	181	-75	-190	273	-26	-13	-75	80
	RESPONSE	218	471	120	533	0	7	6	9
	TOTAL	399	547	310	745	26	20	81	88
A01 M	GR	-61	59	-33	91	-7	-9	-6	13
	T1	133	-238	-158	315	-39	-27	-34	58
	GR+T1	72	-178	-190	270	-47	-36	-40	71
	RESPONSE	486	181	120	533	7	24	84	87
	TOTAL	558	360	310	733	54	59	123	147
A01 F	GR	-1	-90	33	96	-15	9	27	32
	T1	-74	262	158	315	-62	28	-35	77
	GR+T1	-75	172	190	267	-77	37	-9	86
	RESPONSE	471	218	120	533	33	40	79	95
	TOTAL	546	390	310	740	110	77	88	161
A02 -	GR	-1	-98	33	103	-15	24	71	77
	T1	-74	262	158	315	-62	103	-161	201
	GR+T1	-75	164	190	262	-77	128	-89	174
	RESPONSE	471	218	120	533	33	97	33	108
	TOTAL	546	382	310	735	110	225	122	279

L O C A L F O R C E S & M O M E N T S

Point name	Load combination	FORCES (lb) X	Y	Z	Result	MOMENTS (ft-lb) X	Y	Z	Result
A02 +	GR	8	89	4	90	-18	22	72	77
	T1	-86	23	194	213	17	88	-117	148
	GR+T1	-78	112	198	241	-1	110	-45	119
	RESPONSE	46	18	72	88	14	95	24	99
	TOTAL	125	130	270	325	14	205	69	216
A03 N	GR	8	4	-87	87	-18	59	-22	65
	T1	-86	194	-23	213	17	-121	-117	169
	GR+T1	-78	198	-109	240	-1	-62	-140	153
	RESPONSE	46	72	17	87	14	22	85	89
	TOTAL	124	270	126	323	14	84	225	240
A03 M	GR	9	-2	-80	80	17	25	-23	38
	T1	76	198	-23	213	-77	-105	-198	237
	GR+T1	85	196	-103	237	-60	-81	-221	243
	RESPONSE	34	78	15	86	23	8	57	62
	TOTAL	119	273	118	321	83	88	279	304
A03 F	GR	4	73	-8	74	18	21	-21	35
	T1	194	23	86	213	-132	257	-28	290
	GR+T1	198	96	78	234	-114	278	-50	304
	RESPONSE	70	13	45	84	19	34	14	42
	TOTAL	269	108	123	315	133	312	64	345
A03A	GR	4	51	-8	52	18	11	-100	102
	T1	194	23	86	213	-132	365	-57	393
	GR+T1	198	74	78	226	-114	376	-157	423
	RESPONSE	67	2	33	75	19	24	25	40
	TOTAL	266	77	112	298	133	401	182	460
A03B	GR	4	-46	-8	47	18	6	-101	103
	T1	194	23	86	213	-132	427	-74	453
	GR+T1	198	-23	78	214	-114	433	-175	481
	RESPONSE	66	11	20	70	19	47	25	57
	TOTAL	265	34	98	284	133	480	200	537
A04 -	GR	4	-58	-8	59	18	0	-65	68
	T1	194	23	86	213	-132	486	-90	512
	GR+T1	198	-35	78	216	-114	487	-155	523
	RESPONSE	66	11	20	70	19	60	20	66
	TOTAL	265	46	98	286	133	547	175	589

L O C A L F O R C E S & M O M E N T S

Point name	Load combination	FORCES (lb) X	Y	Z	Result	MOMENTS (ft-lb) X	Y	Z	Result
A04 +	GR	4	-93	-8	93	18	0	-65	68
	T1	194	23	86	213	-132	486	-90	512
	GR+T1	198	-70	78	224	-114	487	-155	523
	RESPONSE	67	19	8	70	19	60	20	66
	TOTAL	265	89	86	293	133	547	175	589
A05 -	GR	4	-95	-8	95	18	0	-57	60
	T1	194	23	86	213	-132	494	-92	520
	GR+T1	198	-72	78	225	-114	494	-149	528
	RESPONSE	67	19	8	70	19	61	18	66
	TOTAL	265	91	86	293	133	554	167	594
A05 +	GR	4	-107	-8	107	18	0	-57	60
	T1	194	23	86	213	-132	494	-92	520
	GR+T1	198	-84	78	229	-114	494	-149	528
	RESPONSE	67	22	6	71	19	61	18	66
	TOTAL	266	106	84	298	133	554	167	594
A06 -	GR	4	-108	-8	108	18	-1	-47	51
	T1	194	23	86	213	-132	502	-94	527
	GR+T1	198	-85	78	230	-114	501	-141	533
	RESPONSE	67	22	6	71	19	61	17	66
	TOTAL	266	107	84	299	133	562	158	599
A06 +	GR	4	-143	-8	143	18	-1	-47	51
	T1	194	23	86	213	-132	502	-94	527
	GR+T1	198	-120	78	245	-114	501	-141	533
	RESPONSE	69	29	13	76	19	61	17	66
	TOTAL	267	149	91	320	133	562	158	599
A07 N	GR	4	-8	143	143	18	-47	1	50
	T1	194	85	-23	213	-132	-93	-502	528
	GR+T1	198	78	120	245	-114	-141	-501	533
	RESPONSE	69	14	30	77	19	17	61	66
	TOTAL	268	92	150	320	134	158	562	599
A07 M	GR	-2	-9	150	150	1	6	4	7
	T1	198	-76	-23	213	-163	19	-504	530
	GR+T1	196	-85	127	248	-162	24	-500	526
	RESPONSE	44	57	31	78	11	20	49	54
	TOTAL	239	141	158	320	174	44	549	577

L O C A L F O R C E S & M O M E N T S

Point name	Load combination	FORCES (lb) X	Y	Z	Result	MOMENTS (ft-lb) X	Y	Z	Result
A07 F	GR	-8	-157	-4	157	27	-7	58	64
	T1	86	23	-194	213	-105	448	121	476
	GR+T1	78	-134	-198	252	-78	441	178	482
	RESPONSE	18	32	70	79	15	36	20	44
	TOTAL	96	166	268	330	93	477	198	525
A08	GR	-8	-158	-4	159	27	-8	73	78
	T1	86	23	-194	213	-105	429	118	457
	GR+T1	78	-135	-198	253	-78	421	192	469
	RESPONSE	19	33	70	80	15	35	22	44
	TOTAL	97	168	269	332	93	457	213	513
A09 -	GR	-8	-163	-4	163	27	-9	126	130
	T1	86	23	-194	213	-105	365	111	396
	GR+T1	78	-140	-198	255	-78	356	237	435
	RESPONSE	19	33	70	80	15	43	29	54
	TOTAL	97	173	269	334	93	399	266	488
A09 +	GR	-8	198	-4	198	27	-9	126	130
	T1	86	484	-194	529	-105	365	111	396
	GR+T1	78	682	-198	714	-78	356	237	435
	RESPONSE	21	636	277	694	15	43	29	54
	TOTAL	99	1318	476	1404	93	399	266	488
A10	GR	-8	190	-4	191	27	-12	4	30
	T1	86	484	-194	529	-105	243	-194	328
	GR+T1	78	675	-198	708	-78	231	-190	309
	RESPONSE	34	635	274	692	15	155	386	416
	TOTAL	112	1309	473	1396	93	386	576	700
2	GR	-8	129	-4	129	27	-14	-69	76
	T1	86	484	-194	529	-105	153	-417	457
	GR+T1	78	613	-198	649	-78	140	-486	512
	RESPONSE	34	635	274	692	15	280	678	733
	TOTAL	112	1248	473	1339	93	419	1164	1241

*** Segment A end ***

*** Segment B begin ***

3	GR	13	-391	-25	392	2	-21	-241	242
	T1	144	-1601	-100	1611	102	186	-611	647
	GR+T1	157	-1992	-125	2002	104	166	-852	874
	RESPONSE	32	709	269	759	38	263	724	771
	TOTAL	190	2701	393	2736	142	429	1576	1640

L O C A L F O R C E S & M O M E N T S

Point name	Load combination	FORCES (lb) X	Y	Z	Result	MOMENTS (ft-lb) X	Y	Z	Result
B00	GR	13	-452	-25	453	2	-32	-47	57
	T1	144	-1601	-100	1611	102	141	125	214
	GR+T1	157	-2053	-125	2063	104	109	78	170
	RESPONSE	23	710	272	761	38	172	400	437
	TOTAL	180	2763	396	2797	142	281	479	573
B01 -	GR	13	-459	-25	460	2	-48	240	245
	T1	144	-1601	-100	1611	102	78	1134	1141
	GR+T1	157	-2060	-125	2070	104	30	1374	1378
	RESPONSE	23	710	272	761	38	159	85	184
	TOTAL	180	2770	396	2804	142	189	1459	1478
B01 +	GR	13	211	23	212	2	-48	240	245
	T1	144	1108	-147	1127	102	78	1134	1141
	GR+T1	157	1319	-125	1334	104	30	1374	1378
	RESPONSE	22	54	26	64	38	159	85	184
	TOTAL	179	1373	150	1393	142	189	1459	1478
B02	GR	13	206	23	208	2	-40	171	176
	T1	144	1108	-147	1127	102	29	768	776
	GR+T1	157	1314	-125	1329	104	-11	940	946
	RESPONSE	20	53	24	62	38	157	78	179
	TOTAL	177	1367	148	1386	142	168	1017	1041
B03 N	GR	14	193	23	194	2	-23	18	29
	T1	146	1108	-147	1127	102	-85	-85	157
	GR+T1	160	1300	-125	1316	104	-107	-67	164
	RESPONSE	18	52	22	59	38	154	75	175
	TOTAL	178	1352	147	1372	142	261	142	329
B03 M	GR	141	122	23	188	-11	-9	-47	49
	T1	887	680	-147	1127	-9	-184	-455	491
	GR+T1	1028	802	-125	1309	-21	-193	-502	538
	RESPONSE	43	33	21	58	133	86	80	177
	TOTAL	1070	835	145	1365	153	279	581	663
B03 F	GR	179	13	-23	181	-11	-9	69	71
	T1	1108	144	147	1127	-158	176	566	613
	GR+T1	1287	157	125	1303	-169	166	635	677
	RESPONSE	50	17	20	57	154	36	79	177
	TOTAL	1338	175	145	1357	323	203	714	809

L O C A L F O R C E S & M O M E N T S

Point name	Load combination	FORCES (lb) X	Y	Z	Result	MOMENTS (ft-lb) X	Y	Z	Result
B04	GR	179	13	-23	181	-11	-9	69	71
	T1	1108	144	147	1127	-158	176	565	613
	GR+T1	1287	157	125	1303	-169	167	634	677
	RESPONSE	50	17	19	56	154	36	79	177
	TOTAL	1337	174	144	1356	323	203	714	809
B05 -	GR	166	13	-23	168	-11	-26	59	66
	T1	1108	144	147	1127	-158	287	457	562
	GR+T1	1274	157	125	1290	-169	260	516	602
	RESPONSE	50	17	19	56	154	38	71	174
	TOTAL	1324	174	144	1343	323	299	588	734
B05 +	GR	139	13	-23	142	-11	-26	59	66
	T1	1108	144	147	1127	-158	287	457	562
	GR+T1	1247	157	125	1263	-169	260	516	602
	RESPONSE	43	21	12	50	154	38	71	174
	TOTAL	1290	179	136	1310	323	299	588	734
B06	GR	103	13	-23	106	-11	-75	30	81
	T1	1108	144	147	1127	-158	599	153	638
	GR+T1	1211	157	125	1227	-169	524	183	581
	RESPONSE	40	22	10	47	154	45	27	162
	TOTAL	1251	179	135	1271	323	569	210	687
B07 -	GR	85	13	-23	89	-11	-97	17	99
	T1	1108	144	147	1127	-158	746	9	763
	GR+T1	1193	157	125	1210	-169	649	26	671
	RESPONSE	40	22	10	47	154	48	8	161
	TOTAL	1234	179	135	1254	323	697	34	769
B07 +	GR	50	13	-23	57	-11	-97	17	99
	T1	1108	144	147	1127	-158	746	9	763
	GR+T1	1158	157	125	1176	-169	649	26	671
	RESPONSE	37	22	13	45	154	48	8	161
	TOTAL	1195	179	138	1216	323	697	34	769
B08 -	GR	44	13	-23	52	-11	-105	12	107
	T1	1108	144	147	1127	-158	798	-41	814
	GR+T1	1152	157	125	1170	-169	693	-29	713
	RESPONSE	37	22	13	45	154	48	7	161
	TOTAL	1189	179	138	1210	323	740	35	808

L O C A L F O R C E S & M O M E N T S

Point name	Load combination	FORCES (lb) X	Y	Z	Result	MOMENTS (ft-lb) X	Y	Z	Result
B08 +	GR	-48	13	-23	55	-11	-39	12	43
	T1	1108	144	147	1127	-158	798	-41	814
	GR+T1	1059	157	125	1078	-169	758	-29	778
	RESPONSE	31	95	50	112	85	35	53	107
	TOTAL	1091	253	175	1133	254	794	82	838
B09 N	GR	-55	-23	-13	61	-11	8	48	50
	T1	1108	147	-144	1127	-158	-93	-851	870
	GR+T1	1053	125	-157	1072	-169	-85	-803	825
	RESPONSE	32	51	97	114	85	23	23	91
	TOTAL	1085	176	254	1128	254	109	827	872
B09 M	GR	-60	27	-13	67	-5	9	47	48
	T1	888	-679	-144	1127	-198	-5	-741	767
	GR+T1	828	-652	-157	1066	-203	4	-694	723
	RESPONSE	39	48	99	116	64	39	19	77
	TOTAL	867	700	256	1143	267	43	713	762
B09 F	GR	-23	-68	13	73	1	-5	-27	28
	T1	147	1108	144	1127	-165	-86	371	415
	GR+T1	125	1040	157	1059	-164	-91	343	391
	RESPONSE	53	33	100	117	36	36	20	55
	TOTAL	177	1073	257	1117	200	127	364	434
B10 N	GR	-23	72	-13	77	1	2	11	11
	T1	147	-1108	-144	1127	-165	52	-108	204
	GR+T1	125	-1036	-157	1055	-164	53	-98	198
	RESPONSE	53	34	100	118	36	13	22	44
	TOTAL	178	1069	257	1114	200	66	119	242
B10 M	GR	38	70	-13	81	0	-3	-9	9
	T1	-679	-888	-144	1127	-94	119	167	226
	GR+T1	-641	-817	-157	1051	-94	117	158	218
	RESPONSE	50	39	100	119	26	15	21	37
	TOTAL	691	857	257	1130	120	131	179	252
B10 F	GR	81	13	23	85	-3	22	-5	23
	T1	-1108	144	-147	1127	4	-310	117	331
	GR+T1	-1027	157	-125	1046	1	-288	112	309
	RESPONSE	34	100	54	119	21	16	16	31
	TOTAL	1061	258	179	1106	22	304	128	330

L O C A L F O R C E S & M O M E N T S

Point name	Load combination	FORCES (lb) X	Y	Z	Result	MOMENTS (ft-lb) X	Y	Z	Result
B10A	GR	226	13	23	228	-3	24	-6	25
	T1	-1108	144	-147	1127	4	-320	107	338
	GR+T1	-882	157	-125	904	1	-296	101	313
	RESPONSE	56	108	75	143	21	14	18	31
	TOTAL	937	266	200	994	22	311	119	334
B10B	GR	226	13	23	228	-3	24	-7	26
	T1	-1108	144	-147	1127	4	-326	102	341
	GR+T1	-882	157	-125	904	1	-301	95	316
	RESPONSE	83	123	100	179	21	14	20	32
	TOTAL	964	280	224	1029	22	315	115	336
B11 N	GR	230	13	23	231	-3	29	-9	30
	T1	-1108	146	-147	1127	3	-354	74	362
	GR+T1	-878	159	-125	901	0	-325	65	331
	RESPONSE	84	124	101	180	21	22	37	47
	TOTAL	962	283	225	1027	21	347	102	362
B11 M	GR	176	-158	23	238	22	30	20	43
	T1	-680	887	-147	1127	-269	-305	-139	430
	GR+T1	-504	728	-125	894	-248	-274	-119	388
	RESPONSE	118	94	102	182	29	52	76	96
	TOTAL	621	823	226	1055	277	326	194	470
B11 F	GR	13	-243	23	245	40	14	103	111
	T1	144	1108	-147	1127	-427	-78	-550	701
	GR+T1	157	865	-125	888	-387	-63	-447	595
	RESPONSE	125	86	102	183	68	53	94	128
	TOTAL	282	950	227	1017	456	116	542	717
B12	GR	13	-243	23	245	40	14	103	112
	T1	144	1108	-147	1127	-427	-78	-553	703
	GR+T1	157	865	-125	888	-387	-63	-449	596
	RESPONSE	125	86	102	183	68	53	94	128
	TOTAL	282	950	227	1017	456	117	543	719
*** Segment B end ***									
*** Segment C begin ***									
B08	GR	0	93	0	93	0	0	66	66
	T1	0	0	0	0	0	0	0	0
	GR+T1	0	93	0	93	0	0	66	66
	RESPONSE	43	45	96	114	51	69	44	97
	TOTAL	43	138	96	173	51	69	110	140

L O C A L F O R C E S & M O M E N T S

Point name	Load combination	FORCES (lb) X	Y	Z	Result	MOMENTS (ft-lb) X	Y	Z	Result
C01 N	GR	0	91	0	91	0	0	39	39
	T1	0	0	0	0	0	0	0	0
	GR+T1	0	91	0	91	0	0	39	39
	RESPONSE	43	45	95	114	51	41	34	74
	TOTAL	43	136	95	172	51	41	72	98
C01 M	GR	64	64	0	91	0	0	28	28
	T1	0	0	0	0	0	0	0	0
	GR+T1	64	64	0	91	0	0	28	28
	RESPONSE	38	49	95	113	12	54	28	62
	TOTAL	102	113	95	179	12	54	56	79
C01 F	GR	90	0	0	90	0	-24	0	24
	T1	0	0	0	0	0	0	0	0
	GR+T1	90	0	0	90	0	-24	0	24
	RESPONSE	45	95	42	113	25	22	35	49
	TOTAL	134	95	42	170	25	46	35	63
C02 N	GR	89	0	0	89	0	0	-24	24
	T1	0	0	0	0	0	0	0	0
	GR+T1	89	0	0	89	0	0	-24	24
	RESPONSE	44	42	95	113	25	16	15	34
	TOTAL	133	42	95	169	25	16	39	49
C02 M	GR	62	-62	0	88	0	0	-19	19
	T1	0	0	0	0	0	0	0	0
	GR+T1	62	-62	0	88	0	0	-19	19
	RESPONSE	37	48	94	112	11	18	11	24
	TOTAL	100	111	94	176	11	18	30	37
C02 F	GR	0	87	0	87	0	0	9	9
	T1	0	0	0	0	0	0	0	0
	GR+T1	0	87	0	87	0	0	9	9
	RESPONSE	42	44	94	112	0	10	5	11
	TOTAL	42	132	94	167	0	10	14	17
C03	GR	0	0	0	0	0	0	2	2
	T1	0	0	0	0	0	0	0	0
	GR+T1	0	0	0	0	0	0	2	2
	RESPONSE	21	23	48	57	0	2	1	2
	TOTAL	21	23	48	57	0	2	3	3

L O C A L F O R C E S & M O M E N T S

Point name	Load combination	FORCES (lb) X	Y	Z	Result	MOMENTS (ft-lb) X	Y	Z	Result
C04	GR	0	0	0	0	0	0	0	0
	T1	0	0	0	0	0	0	0	0
	GR+T1	0	0	0	0	0	0	0	0
	RESPONSE	21	23	48	57	0	0	0	0
	TOTAL	21	23	48	57	0	0	0	0

*** Segment C end ***

B E A M F O R C E S & M O M E N T S

Beam ID	Load combination	Point name	FORCES (lb) Axial	Y-Shear	Z-Shear	MOMENTS (ft-lb) Torsion	Y-Y Mom.	Z-Z Mom.
M1	GR	2	3234	0	0	0	0	0
		1	-3248	0	0	0	0	0
	T1	2	-2031	0	0	0	0	0
		1	2031	0	0	0	0	0
	GR+T1	2	1203	0	0	0	0	0
		1	-1217	0	0	0	0	0
	RESPONSE	2	1160	1	3	0	1	0
		1	1160	1	3	0	0	0
	TOTAL	2	2363	1	3	0	1	0
		1	2377	1	3	0	0	0
M2	GR	2	3363	-4	-8	-14	-69	27
		3	-3346	4	8	14	72	-28
	T1	2	-1546	-194	86	153	-417	-105
		3	1546	194	-86	-153	390	45
	GR+T1	2	1817	-198	78	140	-486	-78
		3	-1800	198	-78	-140	462	17
	RESPONSE	2	1582	270	53	280	677	15
		3	1582	270	53	280	662	96
	TOTAL	2	3399	468	131	419	1163	93
		3	3382	468	131	419	1124	113
M3	GR	3	3737	20	-21	7	169	26
		4	-3710	-20	21	-7	-159	-16
	T1	3	55	-94	-58	-33	221	-147
		4	-55	94	58	33	-192	100
	GR+T1	3	3792	-74	-79	-26	390	-121
		4	-3764	74	79	26	-350	84
	RESPONSE	3	1170	509	101	20	1384	122
		4	1170	509	101	20	1337	365
	TOTAL	3	4962	583	180	47	1774	243
		4	4934	583	180	47	1688	449
M4	GR	4	2710	20	-21	7	159	16
		5	-2566	-20	21	-7	-112	29
	T1	4	55	-94	-58	-33	192	-100
		5	-55	94	58	33	-65	-107
	GR+T1	4	2764	-74	-79	-26	350	-84
		5	-2621	74	79	26	-177	-78
	RESPONSE	4	1045	479	467	20	1337	365
		5	1045	479	467	20	545	1390
	TOTAL	4	3810	553	546	47	1688	449
		5	3666	553	546	47	722	1468

B E A M F O R C E S & M O M E N T S

Beam ID	Load combination	Point name	FORCES (lb) Axial	Y-Shear	Z-Shear	MOMENTS (ft-lb) Torsion	Y-Y Mom.	Z-Z Mom.
M5	GR	5	2574	-8	-12	5	115	-17
		6	-2452	8	12	-5	-93	2
	T1	5	78	-58	-70	-14	40	-15
		6	-78	58	70	14	90	-93
	GR+T1	5	2652	-65	-82	-8	155	-32
		6	-2530	65	82	8	-3	-90
	RESPONSE	5	505	729	269	24	552	1386
		6	505	729	269	24	109	87
	TOTAL	5	3157	795	350	32	707	1417
		6	3035	795	350	32	112	177
M6	GR	6	203	0	0	0	0	0
		7	0	0	0	0	0	0
	T1	6	0	0	0	0	0	0
		7	0	0	0	0	0	0
	GR+T1	6	203	0	0	0	0	0
		7	0	0	0	0	0	0
	RESPONSE	6	20	33	35	0	107	103
		7	20	33	35	0	0	0
	TOTAL	6	223	33	35	0	107	103
		7	20	33	35	0	0	0
M7	GR	5	28	11	-1	0	2	13
		A02	-41	5	1	0	3	2
	T1	5	-17	-42	1	-3	-26	-123
		A02	17	42	-1	3	21	-89
	GR+T1	5	12	-30	0	-2	-24	-111
		A02	-24	47	0	2	24	-87
	RESPONSE	5	1597	8	2	1	6	19
		A02	1597	8	2	1	4	22
	TOTAL	5	1609	38	2	3	30	129
		A02	1621	55	2	3	28	109
M8	GR	6	14	-1	-4	0	5	-4
		8	-14	10	4	0	4	-9
	T1	6	90	78	-14	6	-14	129
		8	-90	-78	14	-6	46	55
	GR+T1	6	103	78	-18	5	-8	125
		8	-103	-68	18	-5	49	46
	RESPONSE	6	787	52	20	4	24	83
		8	787	52	20	4	23	40
	TOTAL	6	890	130	38	9	32	209
		8	890	121	38	9	73	86

ASME B31.3c (1992) CODE COMPLIANCE

Point name	Load combination	(Moments in ft-lb) In-Pl. Moment	Out-Pl. Moment	Torsion Moment	S.I.F In	Out	(Stress in psi) Eq. no.	Load type	Code Stress	Code Allow.
*** Segment A begin ***										
A00	Max P						(3a)	HOOP	4844	13360
	GR + Max P	2	6		1.00	1.00	(18)	SUST	2094	16700
	Cold to T1	99	37	24	1.00	1.00	(17)	DISP	404	25050
	Sus. + R1	56	27		1.00	1.00	(18)	OCC	2372	22211
	Sus. + R2	4	6		1.00	1.00	(18)	OCC	2104	22211
	Sus. + R3	139	45		1.00	1.00	(18)	OCC	2779	22211
A01A	Max P						(3a)	HOOP	4844	13360
	GR + Max P	2	2		1.00	1.00	(18)	SUST	2081	16700
	Cold to T1	80	2	24	1.00	1.00	(17)	DISP	312	25050
	Sus. + R1	12	7		1.00	1.00	(18)	OCC	2136	22211
	Sus. + R2	2	3		1.00	1.00	(18)	OCC	2085	22211
	Sus. + R3	28	14		1.00	1.00	(18)	OCC	2218	22211
A01B	Max P						(3a)	HOOP	4844	13360
	GR + Max P	2	4		1.00	1.00	(18)	SUST	2086	16700
	Cold to T1	77	8	24	1.00	1.00	(17)	DISP	303	25050
	Sus. + R1	6	7		1.00	1.00	(18)	OCC	2108	22211
	Sus. + R2	2	5		1.00	1.00	(18)	OCC	2091	22211
	Sus. + R3	10	11		1.00	1.00	(18)	OCC	2139	22211
A01 N-	Max P						(3a)	HOOP	4844	13360
	GR + Max P	2	4		1.00	1.00	(18)	SUST	2087	16700
	Cold to T1	77	9	24	1.00	1.00	(17)	DISP	302	25050
	Sus. + R1	4	7		1.00	1.00	(18)	OCC	2104	22211
	Sus. + R2	2	5		1.00	1.00	(18)	OCC	2092	22211
	Sus. + R3	8	10		1.00	1.00	(18)	OCC	2128	22211
A01 N+	Max P						(3a)	HOOP	4844	13360
	GR + Max P	2	4		2.56	2.13	(18)	SUST	2113	16700
	Cold to T1	77	9	24	2.56	2.13	(17)	DISP	741	25050
	Sus. + R1	4	7		2.56	2.13	(18)	OCC	2153	22211
	Sus. + R2	2	5		2.56	2.13	(18)	OCC	2123	22211
	Sus. + R3	8	10		2.56	2.13	(18)	OCC	2208	22211
A01 M	Max P						(3a)	HOOP	4844	13360
	GR + Max P	6	9		2.56	2.13	(18)	SUST	2184	16700
	Cold to T1	34	27	39	2.56	2.13	(17)	DISP	412	25050
	Sus. + R1	37	18		2.56	2.13	(18)	OCC	2581	22211
	Sus. + R2	7	10		2.56	2.13	(18)	OCC	2203	22211
	Sus. + R3	84	31		2.56	2.13	(18)	OCC	3164	22211

ASME B31.3c (1992) CODE COMPLIANCE

Point name	Load combination	(Moments in ft-lb) In-Pl. Moment	Out-Pl. Moment	Torsion Moment	S.I.F In	S.I.F Out	Eq. no.	(Stress in psi) Load type	Code Stress	Code Allow.
A01 F-	Max P						(3a)	HOOP	4844	13360
	GR + Max P	27	9		2.56	2.13	(18)	SUST	2404	16700
	Cold to T1	35	28	62	2.56	2.13	(17)	DISP	468	25050
	Sus. + R1	59	24		2.56	2.13	(18)	OCC	2827	22211
	Sus. + R2	31	10		2.56	2.13	(18)	OCC	2465	22211
	Sus. + R3	99	46		2.56	2.13	(18)	OCC	3371	22211
A01 F+	Max P						(3a)	HOOP	4844	13360
	GR + Max P	27	9		1.00	1.00	(18)	SUST	2200	16700
	Cold to T1	35	28	62	1.00	1.00	(17)	DISP	287	25050
	Sus. + R1	59	24		1.00	1.00	(18)	OCC	2370	22211
	Sus. + R2	31	10		1.00	1.00	(18)	OCC	2224	22211
	Sus. + R3	99	46		1.00	1.00	(18)	OCC	2591	22211
A02	Max P						(3a)	HOOP	4844	13360
	GR + Max P	72	22		1.00	1.00	(18)	SUST	2427	16700
	Cold to T1	117	88	17	1.00	1.00	(17)	DISP	551	25050
	Sus. + R1	82	57		1.00	1.00	(18)	OCC	2603	22211
	Sus. + R2	86	24		1.00	1.00	(18)	OCC	2497	22211
	Sus. + R3	88	109		1.00	1.00	(18)	OCC	2855	22211
A03 N-	Max P						(3a)	HOOP	4844	13360
	GR + Max P	59	22		1.00	1.00	(18)	SUST	2368	16700
	Cold to T1	121	117	17	1.00	1.00	(17)	DISP	631	25050
	Sus. + R1	69	56		1.00	1.00	(18)	OCC	2536	22211
	Sus. + R2	71	24		1.00	1.00	(18)	OCC	2425	22211
	Sus. + R3	75	101		1.00	1.00	(18)	OCC	2751	22211
A03 N+	Max P						(3a)	HOOP	4844	13360
	GR + Max P	22	59		1.95	1.63	(18)	SUST	2571	16700
	Cold to T1	117	121	17	1.95	1.63	(17)	DISP	1127	25050
	Sus. + R1	56	69		1.95	1.63	(18)	OCC	2895	22211
	Sus. + R2	24	71		1.95	1.63	(18)	OCC	2665	22211
	Sus. + R3	101	75		1.95	1.63	(18)	OCC	3315	22211
A03 M	Max P						(3a)	HOOP	4844	13360
	GR + Max P	23	25		1.95	1.63	(18)	SUST	2355	16700
	Cold to T1	198	105	77	1.95	1.63	(17)	DISP	1607	25050
	Sus. + R1	51	30		1.95	1.63	(18)	OCC	2617	22211
	Sus. + R2	24	30		1.95	1.63	(18)	OCC	2395	22211
	Sus. + R3	73	28		1.95	1.63	(18)	OCC	2826	22211
A03 F-	Max P						(3a)	HOOP	4844	13360
	GR + Max P	21	21		1.95	1.63	(18)	SUST	2322	16700
	Cold to T1	257	28	132	1.95	1.63	(17)	DISP	1946	25050
	Sus. + R1	41	26		1.95	1.63	(18)	OCC	2511	22211
	Sus. + R2	22	26		1.95	1.63	(18)	OCC	2358	22211
	Sus. + R3	48	34		1.95	1.63	(18)	OCC	2598	22211

ASME B31.3c (1992) CODE COMPLIANCE

Point name	Load combination	(Moments in ft-lb) In-Pl. Moment	Out-Pl. Moment	Torsion Moment	S.I.F In	S.I.F Out	Eq. no.	(Stress in psi) Load type	Code Stress	Code Allow.
A03 F+	Max P						(3a)	HOOP	4844	13360
	GR + Max P	21	21		1.00	1.00	(18)	SUST	2208	16700
	Cold to T1	28	257	132	1.00	1.00	(17)	DISP	1084	25050
	Sus. + R1	26	41		1.00	1.00	(18)	OCC	2306	22211
	Sus. + R2	26	22		1.00	1.00	(18)	OCC	2230	22211
	Sus. + R3	34	48		1.00	1.00	(18)	OCC	2354	22211
A03A	Max P						(3a)	HOOP	4844	13360
	GR + Max P	100	11		1.00	1.00	(18)	SUST	2547	16700
	Cold to T1	57	365	132	1.00	1.00	(17)	DISP	1466	25050
	Sus. + R1	104	19		1.00	1.00	(18)	OCC	2592	22211
	Sus. + R2	120	11		1.00	1.00	(18)	OCC	2643	22211
	Sus. + R3	113	34		1.00	1.00	(18)	OCC	2673	22211
A03B	Max P						(3a)	HOOP	4844	13360
	GR + Max P	101	6		1.00	1.00	(18)	SUST	2553	16700
	Cold to T1	74	427	132	1.00	1.00	(17)	DISP	1692	25050
	Sus. + R1	107	25		1.00	1.00	(18)	OCC	2650	22211
	Sus. + R2	122	7		1.00	1.00	(18)	OCC	2652	22211
	Sus. + R3	115	49		1.00	1.00	(18)	OCC	2770	22211
A04	Max P						(3a)	HOOP	4844	13360
	GR + Max P	65	0		1.00	1.00	(18)	SUST	2380	16700
	Cold to T1	90	486	132	1.00	1.00	(17)	DISP	1911	25050
	Sus. + R1	72	27		1.00	1.00	(18)	OCC	2511	22211
	Sus. + R2	79	2		1.00	1.00	(18)	OCC	2444	22211
	Sus. + R3	78	54		1.00	1.00	(18)	OCC	2647	22211
A05	Max P						(3a)	HOOP	4844	13360
	GR + Max P	57	0		1.00	1.00	(18)	SUST	2340	16700
	Cold to T1	92	494	132	1.00	1.00	(17)	DISP	1940	25050
	Sus. + R1	63	27		1.00	1.00	(18)	OCC	2472	22211
	Sus. + R2	69	2		1.00	1.00	(18)	OCC	2396	22211
	Sus. + R3	70	55		1.00	1.00	(18)	OCC	2608	22211
A06	Max P						(3a)	HOOP	4844	13360
	GR + Max P	47	1		1.00	1.00	(18)	SUST	2293	16700
	Cold to T1	94	502	132	1.00	1.00	(17)	DISP	1969	25050
	Sus. + R1	54	28		1.00	1.00	(18)	OCC	2427	22211
	Sus. + R2	57	2		1.00	1.00	(18)	OCC	2340	22211
	Sus. + R3	60	55		1.00	1.00	(18)	OCC	2561	22211
A07 N-	Max P						(3a)	HOOP	4844	13360
	GR + Max P	47	1		1.00	1.00	(18)	SUST	2292	16700
	Cold to T1	94	502	132	1.00	1.00	(17)	DISP	1969	25050
	Sus. + R1	54	28		1.00	1.00	(18)	OCC	2426	22211
	Sus. + R2	57	2		1.00	1.00	(18)	OCC	2339	22211
	Sus. + R3	60	55		1.00	1.00	(18)	OCC	2560	22211

ASME B31.3c (1992) CODE COMPLIANCE

Point name	Load combination	(Moments in ft-lb) In-Pl. Moment	Out-Pl. Moment	Torsion Moment	S.I.F In	S.I.F Out	Eq. no.	(Stress in psi) Load type	Code Stress	Code Allow.
A07 N+	Max P						(3a)	HOOP	4844	13360
	GR + Max P	1	47		1.95	1.63	(18)	SUST	2434	16700
	Cold to T1	502	93	132	1.95	1.63	(17)	DISP	3736	25050
	Sus. + R1	28	54		1.95	1.63	(18)	OCC	2693	22211
	Sus. + R2	2	57		1.95	1.63	(18)	OCC	2510	22211
	Sus. + R3	55	60		1.95	1.63	(18)	OCC	2953	22211
A07 M	Max P						(3a)	HOOP	4844	13360
	GR + Max P	4	6		1.95	1.63	(18)	SUST	2126	16700
	Cold to T1	504	19	163	1.95	1.63	(17)	DISP	3725	25050
	Sus. + R1	30	12		1.95	1.63	(18)	OCC	2367	22211
	Sus. + R2	6	7		1.95	1.63	(18)	OCC	2141	22211
	Sus. + R3	47	24		1.95	1.63	(18)	OCC	2549	22211
A07 F-	Max P						(3a)	HOOP	4844	13360
	GR + Max P	7	58		1.95	1.63	(18)	SUST	2521	16700
	Cold to T1	448	120	106	1.95	1.63	(17)	DISP	3370	25050
	Sus. + R1	34	66		1.95	1.63	(18)	OCC	2784	22211
	Sus. + R2	9	69		1.95	1.63	(18)	OCC	2613	22211
	Sus. + R3	30	72		1.95	1.63	(18)	OCC	2767	22211
A07 F+	Max P						(3a)	HOOP	4844	13360
	GR + Max P	58	7		1.00	1.00	(18)	SUST	2344	16700
	Cold to T1	121	448	105	1.00	1.00	(17)	DISP	1777	25050
	Sus. + R1	66	34		1.00	1.00	(18)	OCC	2481	22211
	Sus. + R2	69	9		1.00	1.00	(18)	OCC	2400	22211
	Sus. + R3	72	30		1.00	1.00	(18)	OCC	2476	22211
A08	Max P						(3a)	HOOP	4844	13360
	GR + Max P	73	8		1.00	1.00	(18)	SUST	2420	16700
	Cold to T1	118	429	105	1.00	1.00	(17)	DISP	1706	25050
	Sus. + R1	81	37		1.00	1.00	(18)	OCC	2564	22211
	Sus. + R2	88	10		1.00	1.00	(18)	OCC	2491	22211
	Sus. + R3	87	27		1.00	1.00	(18)	OCC	2537	22211
A09	Max P						(3a)	HOOP	4279	13360
	GR + Max P	126	9		1.00	1.00	(18)	SUST	2982	16700
	Cold to T1	111	365	105	1.00	1.00	(17)	DISP	2753	25050
	Sus. + R1	133	47		1.00	1.00	(18)	OCC	3334	22211
	Sus. + R2	152	12		1.00	1.00	(18)	OCC	3215	22211
	Sus. + R3	140	29		1.00	1.00	(18)	OCC	3197	22211
A10 -	Max P						(3a)	HOOP	4279	13360
	GR + Max P	4	12		1.00	1.00	(18)	SUST	1938	16700
	Cold to T1	194	243	105	1.00	1.00	(17)	DISP	2284	25050
	Sus. + R1	255	74		1.00	1.00	(18)	OCC	4305	22211
	Sus. + R2	17	15		1.00	1.00	(18)	OCC	2060	22211
	Sus. + R3	297	154		1.00	1.00	(18)	OCC	4915	22211

ASME B31.3c (1992) CODE COMPLIANCE

Point name	Load combination	(Moments in ft-lb) In-Pl. Moment	Out-Pl. Moment	Torsion Moment	S.I.F In	S.I.F Out	Eq. no.	(Stress in psi) Load type	Code Stress	Code Allow.
A10 +	Max P						(3a)	HOOP	2013	16000
	GR + Max P	4	12		1.00	1.00	(18)	SUST	931	20000
	Cold to T1	194	243	105	1.00	1.00	(17)	DISP	58	30000
	Sus. + R1	255	74		1.00	1.00	(18)	OCC	979	26600
	Sus. + R2	17	15		1.00	1.00	(18)	OCC	934	26600
	Sus. + R3	297	154		1.00	1.00	(18)	OCC	991	26600
2	Max P						(3a)	HOOP	2013	16000
	GR + Max P	69	14		1.00	1.00	(18)	SUST	942	20000
	Cold to T1	417	153	105	1.00	1.00	(17)	DISP	80	30000
	Sus. + R1	508	138		1.00	1.00	(18)	OCC	1026	26600
	Sus. + R2	99	20		1.00	1.00	(18)	OCC	948	26600
	Sus. + R3	585	264		1.00	1.00	(18)	OCC	1047	26600

*** Segment A end ***

*** Segment B begin ***

Point name	Load combination	(Moments in ft-lb) In-Pl. Moment	Out-Pl. Moment	Torsion Moment	S.I.F In	S.I.F Out	Eq. no.	(Stress in psi) Load type	Code Stress	Code Allow.
3	Max P						(3a)	HOOP	2013	16000
	GR + Max P	241	21		1.00	1.00	(18)	SUST	974	20000
	Cold to T1	611	186	102	1.00	1.00	(17)	DISP	114	30000
	Sus. + R1	712	137		1.00	1.00	(18)	OCC	1063	26600
	Sus. + R2	297	26		1.00	1.00	(18)	OCC	984	26600
	Sus. + R3	787	256		1.00	1.00	(18)	OCC	1083	26600
B00 -	Max P						(3a)	HOOP	2013	16000
	GR + Max P	47	32		1.00	1.00	(18)	SUST	940	20000
	Cold to T1	125	141	102	1.00	1.00	(17)	DISP	38	30000
	Sus. + R1	310	90		1.00	1.00	(18)	OCC	989	26600
	Sus. + R2	63	40		1.00	1.00	(18)	OCC	943	26600
	Sus. + R3	348	194		1.00	1.00	(18)	OCC	1002	26600
B00 +	Max P						(3a)	HOOP	4279	13360
	GR + Max P	47	32		1.00	1.00	(18)	SUST	2343	16700
	Cold to T1	125	141	102	1.00	1.00	(17)	DISP	1491	25050
	Sus. + R1	310	90		1.00	1.00	(18)	OCC	4805	22211
	Sus. + R2	63	40		1.00	1.00	(18)	OCC	2503	22211
	Sus. + R3	348	194		1.00	1.00	(18)	OCC	5475	22211
B01 -	Max P						(3a)	HOOP	4279	13360
	GR + Max P	240	48		1.00	1.00	(18)	SUST	4062	16700
	Cold to T1	1134	78	102	1.00	1.00	(17)	DISP	7943	25050
	Sus. + R1	279	80		1.00	1.00	(18)	OCC	4526	22211
	Sus. + R2	290	60		1.00	1.00	(18)	OCC	4532	22211
	Sus. + R3	297	203		1.00	1.00	(18)	OCC	5575	22211

ASME B31.3c (1992) CODE COMPLIANCE

Point name	Load combination	(Moments in ft-lb) In-Pl. Moment	Out-Pl. Moment	Torsion Moment	S.I.F In	S.I.F Out	Eq. no.	(Stress in psi) Load type	Code Stress	Code Allow.
B01	+ Max P						(3a)	HOOP	4279	13360
	GR + Max P	240	48		1.00	1.00	(18)	SUST	4062	16700
	Cold to T1	1134	78	102	1.00	1.00	(17)	DISP	7943	25050
	Sus. + R1	279	80		1.00	1.00	(18)	OCC	4526	22211
	Sus. + R2	290	60		1.00	1.00	(18)	OCC	4532	22211
	Sus. + R3	297	203		1.00	1.00	(18)	OCC	5575	22211
B02	Max P						(3a)	HOOP	4844	13360
	GR + Max P	171	40		1.00	1.00	(18)	SUST	2911	16700
	Cold to T1	768	29	102	1.00	1.00	(17)	DISP	2895	25050
	Sus. + R1	204	65		1.00	1.00	(18)	OCC	3108	22211
	Sus. + R2	207	52		1.00	1.00	(18)	OCC	3088	22211
	Sus. + R3	232	195		1.00	1.00	(18)	OCC	3708	22211
B03	N- Max P						(3a)	HOOP	4844	13360
	GR + Max P	18	23		1.00	1.00	(18)	SUST	2205	16700
	Cold to T1	85	84	102	1.00	1.00	(17)	DISP	587	25050
	Sus. + R1	44	32		1.00	1.00	(18)	OCC	2339	22211
	Sus. + R2	22	32		1.00	1.00	(18)	OCC	2253	22211
	Sus. + R3	88	176		1.00	1.00	(18)	OCC	3015	22211
B03	N+ Max P						(3a)	HOOP	4844	13360
	GR + Max P	18	23		1.95	1.63	(18)	SUST	2310	16700
	Cold to T1	85	85	102	1.95	1.63	(17)	DISP	889	25050
	Sus. + R1	44	32		1.95	1.63	(18)	OCC	2569	22211
	Sus. + R2	22	32		1.95	1.63	(18)	OCC	2392	22211
	Sus. + R3	88	176		1.95	1.63	(18)	OCC	3677	22211
B03	M Max P						(3a)	HOOP	4844	13360
	GR + Max P	47	9		1.95	1.63	(18)	SUST	2512	16700
	Cold to T1	455	184	9	1.95	1.63	(17)	DISP	3498	25050
	Sus. + R1	76	18		1.95	1.63	(18)	OCC	2790	22211
	Sus. + R2	60	15		1.95	1.63	(18)	OCC	2641	22211
	Sus. + R3	120	94		1.95	1.63	(18)	OCC	3465	22211
B03	F- Max P						(3a)	HOOP	4844	13360
	GR + Max P	69	9		1.95	1.63	(18)	SUST	2716	16700
	Cold to T1	566	176	158	1.95	1.63	(17)	DISP	4299	25050
	Sus. + R1	100	16		1.95	1.63	(18)	OCC	3008	22211
	Sus. + R2	86	12		1.95	1.63	(18)	OCC	2881	22211
	Sus. + R3	140	45		1.95	1.63	(18)	OCC	3438	22211
B03	F+ Max P						(3a)	HOOP	4844	13360
	GR + Max P	69	9		1.00	1.00	(18)	SUST	2400	16700
	Cold to T1	566	176	158	1.00	1.00	(17)	DISP	2288	25050
	Sus. + R1	100	16		1.00	1.00	(18)	OCC	2550	22211
	Sus. + R2	86	12		1.00	1.00	(18)	OCC	2484	22211
	Sus. + R3	140	45		1.00	1.00	(18)	OCC	2782	22211

ASME B31.3c (1992) CODE COMPLIANCE

Point name	Load combination	(Moments in ft-lb) In-Pl. Moment	Out-Pl. Moment	Torsion Moment	S.I.F In	S.I.F Out	Eq. no.	(Stress in psi) Load type	Code Stress	Code Allow.
B04	Max P						(3a)	HOOP	4844	13360
	GR + Max P	69	9		1.00	1.00	(18)	SUST	2400	16700
	Cold to T1	565	176	158	1.00	1.00	(17)	DISP	2287	25050
	Sus. + R1	100	16		1.00	1.00	(18)	OCC	2550	22211
	Sus. + R2	86	12		1.00	1.00	(18)	OCC	2484	22211
	Sus. + R3	140	45		1.00	1.00	(18)	OCC	2782	22211
B05	Max P						(3a)	HOOP	4844	13360
	GR + Max P	59	26		1.00	1.00	(18)	SUST	2376	16700
	Cold to T1	457	287	158	1.00	1.00	(17)	DISP	2100	25050
	Sus. + R1	89	40		1.00	1.00	(18)	OCC	2534	22211
	Sus. + R2	73	32		1.00	1.00	(18)	OCC	2451	22211
	Sus. + R3	122	62		1.00	1.00	(18)	OCC	2722	22211
B06	Max P						(3a)	HOOP	4844	13360
	GR + Max P	30	75		1.00	1.00	(18)	SUST	2452	16700
	Cold to T1	153	599	158	1.00	1.00	(17)	DISP	2381	25050
	Sus. + R1	44	105		1.00	1.00	(18)	OCC	2611	22211
	Sus. + R2	38	93		1.00	1.00	(18)	OCC	2546	22211
	Sus. + R3	53	102		1.00	1.00	(18)	OCC	2623	22211
B07	Max P						(3a)	HOOP	4844	13360
	GR + Max P	17	97		1.00	1.00	(18)	SUST	2540	16700
	Cold to T1	9	746	158	1.00	1.00	(17)	DISP	2848	25050
	Sus. + R1	21	132		1.00	1.00	(18)	OCC	2706	22211
	Sus. + R2	21	122		1.00	1.00	(18)	OCC	2658	22211
	Sus. + R3	22	121		1.00	1.00	(18)	OCC	2654	22211
B08	- Max P						(3a)	HOOP	4844	13360
	GR + Max P	105	12		1.34	1.45	(18)	SUST	2747	16700
	Cold to T1	798	41	158	1.34	1.45	(17)	DISP	4032	25050
	Sus. + R1	139	14		1.34	1.45	(18)	OCC	2962	22211
	Sus. + R2	132	15		1.34	1.45	(18)	OCC	2917	22211
	Sus. + R3	127	18		1.34	1.45	(18)	OCC	2891	22211
B08	+ Max P						(3a)	HOOP	4844	13360
	GR + Max P	39	12		1.34	1.45	(18)	SUST	2333	16700
	Cold to T1	798	41	158	1.34	1.45	(17)	DISP	4032	25050
	Sus. + R1	61	18		1.34	1.45	(18)	OCC	2476	22211
	Sus. + R2	64	16		1.34	1.45	(18)	OCC	2490	22211
	Sus. + R3	54	65		1.34	1.45	(18)	OCC	2713	22211
B09	N- Max P						(3a)	HOOP	4844	13360
	GR + Max P	8	48		1.00	1.00	(18)	SUST	2297	16700
	Cold to T1	93	851	158	1.00	1.00	(17)	DISP	3249	25050
	Sus. + R1	14	60		1.00	1.00	(18)	OCC	2365	22211
	Sus. + R2	10	61		1.00	1.00	(18)	OCC	2364	22211
	Sus. + R3	30	62		1.00	1.00	(18)	OCC	2423	22211

ASME B31.3c (1992) CODE COMPLIANCE

Point name	Load combination	(Moments in ft-lb) In-Pl. Moment	Out-Pl. Moment	Torsion Moment	S.I.F In	S.I.F Out	(Stress in psi) Eq. no.	Load type	Code Stress	Code Allow.
B09 N+	Max P						(3a)	HOOP	4844	13360
	GR + Max P	48	8		1.95	1.63	(18)	SUST	2516	16700
	Cold to T1	851	93	158	1.95	1.63	(17)	DISP	6255	25050
	Sus. + R1	60	14		1.95	1.63	(18)	OCC	2644	22211
	Sus. + R2	61	10		1.95	1.63	(18)	OCC	2646	22211
	Sus. + R3	62	30		1.95	1.63	(18)	OCC	2733	22211
B09 M	Max P						(3a)	HOOP	4844	13360
	GR + Max P	47	9		1.95	1.63	(18)	SUST	2511	16700
	Cold to T1	741	5	198	1.95	1.63	(17)	DISP	5449	25050
	Sus. + R1	59	13		1.95	1.63	(18)	OCC	2632	22211
	Sus. + R2	56	11		1.95	1.63	(18)	OCC	2596	22211
	Sus. + R3	58	48		1.95	1.63	(18)	OCC	2832	22211
B09 F-	Max P						(3a)	HOOP	4844	13360
	GR + Max P	27	5		1.95	1.63	(18)	SUST	2324	16700
	Cold to T1	371	86	165	1.95	1.63	(17)	DISP	2818	25050
	Sus. + R1	43	7		1.95	1.63	(18)	OCC	2475	22211
	Sus. + R2	39	7		1.95	1.63	(18)	OCC	2431	22211
	Sus. + R3	33	41		1.95	1.63	(18)	OCC	2611	22211
B09 F+	Max P						(3a)	HOOP	4844	13360
	GR + Max P	27	5		1.00	1.00	(18)	SUST	2199	16700
	Cold to T1	371	86	165	1.00	1.00	(17)	DISP	1548	25050
	Sus. + R1	43	7		1.00	1.00	(18)	OCC	2276	22211
	Sus. + R2	39	7		1.00	1.00	(18)	OCC	2253	22211
	Sus. + R3	33	41		1.00	1.00	(18)	OCC	2374	22211
B10 N-	Max P						(3a)	HOOP	4844	13360
	GR + Max P	11	2		1.00	1.00	(18)	SUST	2117	16700
	Cold to T1	108	52	165	1.00	1.00	(17)	DISP	761	25050
	Sus. + R1	28	3		1.00	1.00	(18)	OCC	2200	22211
	Sus. + R2	23	2		1.00	1.00	(18)	OCC	2176	22211
	Sus. + R3	17	14		1.00	1.00	(18)	OCC	2185	22211
B10 N+	Max P						(3a)	HOOP	4844	13360
	GR + Max P	11	2		2.56	2.13	(18)	SUST	2198	16700
	Cold to T1	108	52	165	2.56	2.13	(17)	DISP	1272	25050
	Sus. + R1	28	3		2.56	2.13	(18)	OCC	2408	22211
	Sus. + R2	23	2		2.56	2.13	(18)	OCC	2347	22211
	Sus. + R3	17	14		2.56	2.13	(18)	OCC	2348	22211
B10 M	Max P						(3a)	HOOP	4844	13360
	GR + Max P	9	3		2.56	2.13	(18)	SUST	2180	16700
	Cold to T1	167	119	94	2.56	2.13	(17)	DISP	1891	25050
	Sus. + R1	25	8		2.56	2.13	(18)	OCC	2378	22211
	Sus. + R2	20	4		2.56	2.13	(18)	OCC	2313	22211
	Sus. + R3	19	16		2.56	2.13	(18)	OCC	2364	22211

ASME B31.3c (1992) CODE COMPLIANCE

Point name	Load combination	(Moments in ft-lb) In-Pl. Moment	Out-Pl. Moment	Torsion Moment	S.I.F In	S.I.F Out	(Stress in psi) Eq. no.	Load type	Code Stress	Code Allow.
B10 F-	Max P						(3a)	HOOP	4844	13360
	GR + Max P	22	5		2.56	2.13	(18)	SUST	2342	16700
	Cold to T1	310	117	4	2.56	2.13	(17)	DISP	3105	25050
	Sus. + R1	32	12		2.56	2.13	(18)	OCC	2475	22211
	Sus. + R2	27	7		2.56	2.13	(18)	OCC	2409	22211
	Sus. + R3	33	20		2.56	2.13	(18)	OCC	2545	22211
B10 F+	Max P						(3a)	HOOP	4844	13360
	GR + Max P	5	22		1.00	1.00	(18)	SUST	2175	16700
	Cold to T1	117	310	4	1.00	1.00	(17)	DISP	1237	25050
	Sus. + R1	12	32		1.00	1.00	(18)	OCC	2229	22211
	Sus. + R2	7	27		1.00	1.00	(18)	OCC	2201	22211
	Sus. + R3	20	33		1.00	1.00	(18)	OCC	2263	22211
B10A	Max P						(3a)	HOOP	4844	13360
	GR + Max P	6	24		1.00	1.00	(18)	SUST	2183	16700
	Cold to T1	107	320	4	1.00	1.00	(17)	DISP	1260	25050
	Sus. + R1	12	32		1.00	1.00	(18)	OCC	2232	22211
	Sus. + R2	8	28		1.00	1.00	(18)	OCC	2207	22211
	Sus. + R3	23	35		1.00	1.00	(18)	OCC	2279	22211
B10B	Max P						(3a)	HOOP	4844	13360
	GR + Max P	7	24		1.00	1.00	(18)	SUST	2188	16700
	Cold to T1	102	326	4	1.00	1.00	(17)	DISP	1274	25050
	Sus. + R1	13	31		1.00	1.00	(18)	OCC	2233	22211
	Sus. + R2	9	29		1.00	1.00	(18)	OCC	2213	22211
	Sus. + R3	25	35		1.00	1.00	(18)	OCC	2292	22211
B11 N-	Max P						(3a)	HOOP	4844	13360
	GR + Max P	9	29		1.00	1.00	(18)	SUST	2211	16700
	Cold to T1	74	354	4	1.00	1.00	(17)	DISP	1350	25050
	Sus. + R1	16	44		1.00	1.00	(18)	OCC	2291	22211
	Sus. + R2	12	39		1.00	1.00	(18)	OCC	2263	22211
	Sus. + R3	45	40		1.00	1.00	(18)	OCC	2392	22211
B11 N+	Max P						(3a)	HOOP	4844	13360
	GR + Max P	9	29		1.95	1.63	(18)	SUST	2307	16700
	Cold to T1	74	354	3	1.95	1.63	(17)	DISP	2216	25050
	Sus. + R1	16	44		1.95	1.63	(18)	OCC	2442	22211
	Sus. + R2	12	39		1.95	1.63	(18)	OCC	2393	22211
	Sus. + R3	45	40		1.95	1.63	(18)	OCC	2656	22211
B11 M	Max P						(3a)	HOOP	4844	13360
	GR + Max P	20	30		1.95	1.63	(18)	SUST	2371	16700
	Cold to T1	139	305	269	1.95	1.63	(17)	DISP	2337	25050
	Sus. + R1	29	72		1.95	1.63	(18)	OCC	2702	22211
	Sus. + R2	30	52		1.95	1.63	(18)	OCC	2564	22211
	Sus. + R3	95	53		1.95	1.63	(18)	OCC	3090	22211

ASME B31.3c (1992) CODE COMPLIANCE

Point name	Load combination	(Moments in ft-lb) In-Pl. Moment	Out-Pl. Moment	Torsion Moment	S.I.F In	S.I.F Out	(Stress in psi) Eq. no.	Load type	Code Stress	Code Allow.
B11 F-	Max P						(3a)	HOOP	4844	13360
	GR + Max P	103	14		1.95	1.63	(18)	SUST	3037	16700
	Cold to T1	550	78	427	1.95	1.63	(17)	DISP	4342	25050
	Sus. + R1	118	59		1.95	1.63	(18)	OCC	3410	22211
	Sus. + R2	140	35		1.95	1.63	(18)	OCC	3424	22211
	Sus. + R3	188	35		1.95	1.63	(18)	OCC	3853	22211
B11 F+	Max P						(3a)	HOOP	4844	13360
	GR + Max P	103	14		1.00	1.00	(18)	SUST	2565	16700
	Cold to T1	550	78	427	1.00	1.00	(17)	DISP	2617	25050
	Sus. + R1	118	59		1.00	1.00	(18)	OCC	2789	22211
	Sus. + R2	140	35		1.00	1.00	(18)	OCC	2770	22211
	Sus. + R3	188	35		1.00	1.00	(18)	OCC	2986	22211
B12	Max P						(3a)	HOOP	4844	13360
	GR + Max P	103	14		1.00	1.00	(18)	SUST	2567	16700
	Cold to T1	553	78	427	1.00	1.00	(17)	DISP	2624	25050
	Sus. + R1	118	59		1.00	1.00	(18)	OCC	2792	22211
	Sus. + R2	141	35		1.00	1.00	(18)	OCC	2773	22211
	Sus. + R3	189	35		1.00	1.00	(18)	OCC	2988	22211

*** Segment B end ***

*** Segment C begin ***

Point name	Load combination	In-Pl. Moment	Out-Pl. Moment	Torsion Moment	S.I.F In	S.I.F Out	Eq. no.	Load type	Code Stress	Code Allow.
B08	Max P						(3a)	HOOP	5016	13360
	GR + Max P	66	0		1.34	1.45	(18)	SUST	4110	16700
	Cold to T1	0	0	0	1.34	1.45	(17)	DISP	0	25050
	Sus. + R1	95	7		1.34	1.45	(18)	OCC	5064	22211
	Sus. + R2	98	5		1.34	1.45	(18)	OCC	5115	22211
	Sus. + R3	75	69		1.34	1.45	(18)	OCC	6460	22211
C01 N-	Max P						(3a)	HOOP	5016	13360
	GR + Max P	39	0		1.00	1.00	(18)	SUST	3313	16700
	Cold to T1	0	0	0	1.00	1.00	(17)	DISP	0	25050
	Sus. + R1	60	4		1.00	1.00	(18)	OCC	4030	22211
	Sus. + R2	64	3		1.00	1.00	(18)	OCC	4127	22211
	Sus. + R3	45	41		1.00	1.00	(18)	OCC	4660	22211
C01 N+	Max P						(3a)	HOOP	5016	13360
	GR + Max P	39	0		2.27	1.89	(18)	SUST	4913	16700
	Cold to T1	0	0	0	2.27	1.89	(17)	DISP	0	25050
	Sus. + R1	60	4		2.27	1.89	(18)	OCC	6529	22211
	Sus. + R2	64	3		2.27	1.89	(18)	OCC	6756	22211
	Sus. + R3	45	41		2.27	1.89	(18)	OCC	7472	22211

ASME B31.3c (1992) CODE COMPLIANCE

Point name	Load combination	(Moments in ft-lb) In-Pl. Moment	Out-Pl. Moment	Torsion Moment	S.I.F In	S.I.F Out	(Stress in psi) Eq. no.	Load type	Code Stress	Code Allow.
C01 M	Max P						(3a)	HOOP	5016	13360
	GR + Max P	28	0		2.27	1.89	(18)	SUST	4122	16700
	Cold to T1	0	0	0	2.27	1.89	(17)	DISP	0	25050
	Sus. + R1	46	6		2.27	1.89	(18)	OCC	5481	22211
	Sus. + R2	49	4		2.27	1.89	(18)	OCC	5687	22211
	Sus. + R3	33	54		2.27	1.89	(18)	OCC	7446	22211
C01 F-	Max P						(3a)	HOOP	5016	13360
	GR + Max P	24	0		2.27	1.89	(18)	SUST	3797	16700
	Cold to T1	0	0	0	2.27	1.89	(17)	DISP	0	25050
	Sus. + R1	38	4		2.27	1.89	(18)	OCC	4866	22211
	Sus. + R2	40	2		2.27	1.89	(18)	OCC	5023	22211
	Sus. + R3	28	35		2.27	1.89	(18)	OCC	5971	22211
C01 F+	Max P						(3a)	HOOP	5016	13360
	GR + Max P	0	24		1.00	1.00	(18)	SUST	2821	16700
	Cold to T1	0	0	0	1.00	1.00	(17)	DISP	0	25050
	Sus. + R1	4	38		1.00	1.00	(18)	OCC	3297	22211
	Sus. + R2	2	40		1.00	1.00	(18)	OCC	3363	22211
	Sus. + R3	35	28		1.00	1.00	(18)	OCC	3968	22211
C02 N-	Max P						(3a)	HOOP	5016	13360
	GR + Max P	0	24		1.00	1.00	(18)	SUST	2821	16700
	Cold to T1	0	0	0	1.00	1.00	(17)	DISP	0	25050
	Sus. + R1	2	34		1.00	1.00	(18)	OCC	3162	22211
	Sus. + R2	1	35		1.00	1.00	(18)	OCC	3177	22211
	Sus. + R3	16	27		1.00	1.00	(18)	OCC	3338	22211
C02 N+	Max P						(3a)	HOOP	5016	13360
	GR + Max P	24	0		2.27	1.89	(18)	SUST	3797	16700
	Cold to T1	0	0	0	2.27	1.89	(17)	DISP	0	25050
	Sus. + R1	34	2		2.27	1.89	(18)	OCC	4567	22211
	Sus. + R2	35	1		2.27	1.89	(18)	OCC	4603	22211
	Sus. + R3	27	16		2.27	1.89	(18)	OCC	4783	22211
C02 M	Max P						(3a)	HOOP	5016	13360
	GR + Max P	19	0		2.27	1.89	(18)	SUST	3479	16700
	Cold to T1	0	0	0	2.27	1.89	(17)	DISP	0	25050
	Sus. + R1	27	2		2.27	1.89	(18)	OCC	4038	22211
	Sus. + R2	26	1		2.27	1.89	(18)	OCC	4009	22211
	Sus. + R3	22	18		2.27	1.89	(18)	OCC	4587	22211
C02 F-	Max P						(3a)	HOOP	5016	13360
	GR + Max P	9	0		2.27	1.89	(18)	SUST	2717	16700
	Cold to T1	0	0	0	2.27	1.89	(17)	DISP	0	25050
	Sus. + R1	12	1		2.27	1.89	(18)	OCC	2969	22211
	Sus. + R2	12	1		2.27	1.89	(18)	OCC	2943	22211
	Sus. + R3	10	10		2.27	1.89	(18)	OCC	3314	22211

ASME B31.3c (1992) CODE COMPLIANCE

Point name	Load combination	In-Pl. Moment (Moments in ft-lb)	Out-Pl. Moment	Torsion Moment	S.I.F In	S.I.F Out	Eq. no.	Load type	Code Stress (Stress in psi)	Code Allow.
C02 F+	Max P						(3a)	HOOP	5016	13360
	GR + Max P	9	0		1.00	1.00	(18)	SUST	2345	16700
	Cold to T1	0	0	0	1.00	1.00	(17)	DISP	0	25050
	Sus. + R1	12	1		1.00	1.00	(18)	OCC	2458	22211
	Sus. + R2	12	1		1.00	1.00	(18)	OCC	2446	22211
	Sus. + R3	10	10		1.00	1.00	(18)	OCC	2661	22211
C03	Max P						(3a)	HOOP	5016	13360
	GR + Max P	2	0		1.00	1.00	(18)	SUST	2109	16700
	Cold to T1	0	0	0	1.00	1.00	(17)	DISP	0	25050
	Sus. + R1	2	0		1.00	1.00	(18)	OCC	2132	22211
	Sus. + R2	2	0		1.00	1.00	(18)	OCC	2129	22211
	Sus. + R3	2	2		1.00	1.00	(18)	OCC	2171	22211

*** Segment C end ***

S Y S T E M S U M M A R Y

Maximum displacements (in)

Maximum X :	0.058	Point : B03 F	Load Comb.: TOTAL
Maximum Y :	0.076	Point : C04	Load Comb.: T1
Maximum Z :	0.061	Point : A07 N	Load Comb.: TOTAL
Max. total:	0.093	Point : C04	Load Comb.: TOTAL

Maximum rotations (deg)

Maximum X :	0.112	Point : C02 F	Load Comb.: TOTAL
Maximum Y :	0.150	Point : C04	Load Comb.: TOTAL
Maximum Z :	-0.224	Point : B10 N	Load Comb.: T1
Max. total:	0.246	Point : B10 N	Load Comb.: TOTAL

Maximum restraint forces(lb)

Maximum X :	1388	Point : A02	Load Comb.: RESPONSE
Maximum Y :	4093	Point : B01	Load Comb.: TOTAL
Maximum Z :	615	Point : B	Load Comb.: TOTAL
Max. total:	4102	Point : B01	Load Comb.: TOTAL

Maximum restraint moments(ft-lb)

Maximum X :	553	Point : B12	Load Comb.: T1
Maximum Y :	117	Point : B12	Load Comb.: TOTAL
Maximum Z :	456	Point : B12	Load Comb.: TOTAL
Max. total:	719	Point : B12	Load Comb.: TOTAL

S Y S T E M S U M M A R Y

Maximum pipe forces (lb)

Maximum X :	1338	Point : B03 F	Load Comb.: TOTAL
Maximum Y :	2770	Point : B01	Load Comb.: TOTAL
Maximum Z :	476	Point : A09	Load Comb.: TOTAL
Max. total:	2804	Point : B01	Load Comb.: TOTAL

Maximum pipe moments (ft-lb)

Maximum X :	456	Point : B11 F	Load Comb.: TOTAL
Maximum Y :	798	Point : B08	Load Comb.: T1
Maximum Z :	1576	Point : 3	Load Comb.: TOTAL
Max. total:	1640	Point : 3	Load Comb.: TOTAL

S Y S T E M S U M M A R Y

Maximum sustained stress

Point : C01 N
Stress psi : 4913
Allowable psi : 16700
Ratio : 0.29
Load combination : GR + Max P

Maximum displacement stress

Point : B01
Stress psi : 7943
Allowable psi : 25050
Ratio : 0.32
Load combination : Cold to T1

Maximum occasional stress

Point : C01 N
Stress psi : 7472
Allowable psi : 22211
Ratio : 0.34
Load combination : Sus. + R3

Maximum hoop stress

Point : B08
Stress psi : 5016
Allowable psi : 13360
Ratio : 0.38
Load combination : Max P

Maximum sustained stress ratio

Point : C01 N
Stress psi : 4913
Allowable psi : 16700
Ratio : 0.29
Load combination : GR + Max P

Maximum displacement stress ratio

Point : B01
Stress psi : 7943
Allowable psi : 25050
Ratio : 0.32
Load combination : Cold to T1

S Y S T E M S U M M A R Y

Maximum occasional stress ratio

Point	: C01 N
Stress psi	: 7472
Allowable psi	: 22211
Ratio	: 0.34
Load combination	: Sus. + R3

Maximum hoop stress ratio

Point	: B08
Stress psi	: 5016
Allowable psi	: 13360
Ratio	: 0.38
Load combination	: Max P

* * * The system satisfies ASME B31.3 code requirements * * *
* * * for the selected options * * *

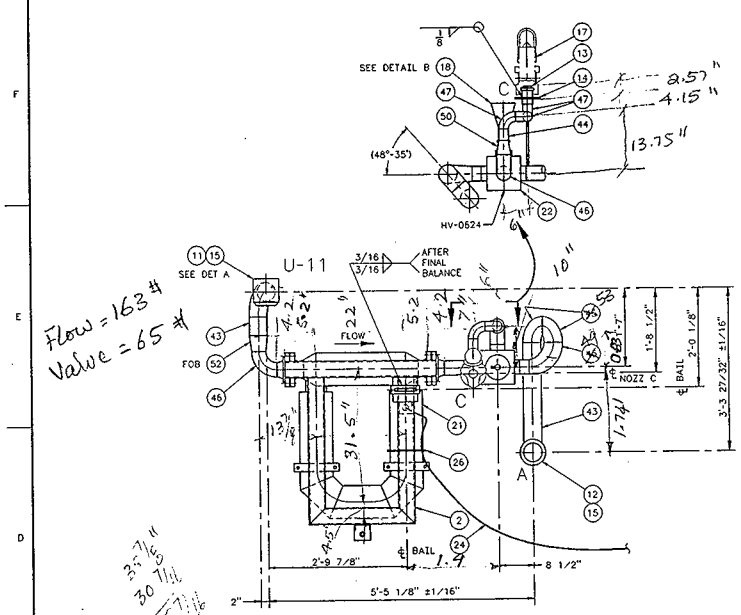

PLAN

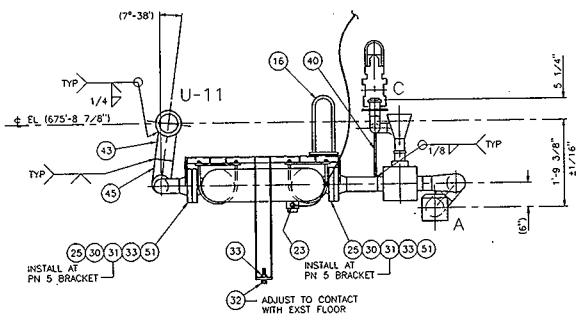

ELEVATION

1 ASSEMBLY
SCALE: 1"= 1'-0"

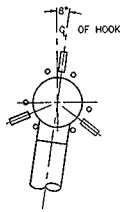

DETAIL A
SCALE: NONE

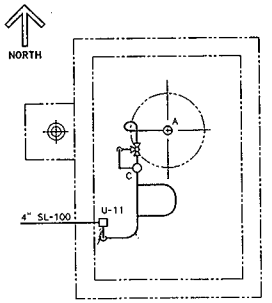

241-AY-02A
PUMP PIT

KEY PLAN
SCALE: NONE

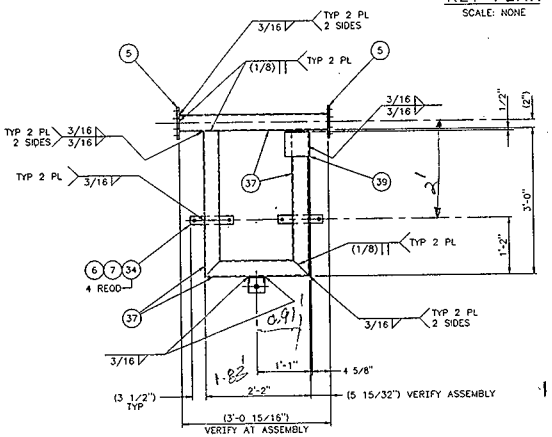

PLAN

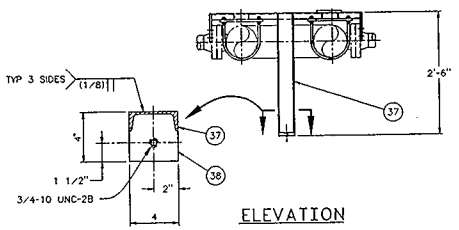

ELEVATION

2 SUPPORT FRAME SUB-ASSY
SCALE: 1"= 1'-0"

PARTS/MATERIAL LIST

QUANTITY REQUIRED		PART/DASH NUMBER	NOMENCLATURE/DESCRIPTION	MATERIAL/REFERENCE	SHEET	ITEM NO.
		-010	ASSEMBLY			1
	1	-020	SUPPORT FRAME SUB-ASSEMBLY		1	2
						3
						4
2		-001	BRACKET, PLATE 1/2" THK	ASTM A 36	2	5
2		-002	BRACKET, PLATE 1/2" THK	ASTM A 36	2	6
2		-003	U-BOLT, BAR Ø1/2"	ASTM A 36	2	7
						8
						9
						10
	1	H-2-32440-1	CONN, HORIZ 4"			11
	1	H-2-32440-2	CONN, VERT, 4"			12
	1	H-2-90185-2	NOZZLE, MALE 2"			13
	1	H-2-3194-2	KICKOFF PLATE, 2" ROUND			14
	2	H-2-3197-8	GASKET 4" TYPE III			15
	1	H-2-90161-15	LIFTING BAIL			16
	1	H-2-818509-1	JUMPER FLUSHING BLANK HEAD ✓			17
	1	H-2-50171-5	FUNNEL ASSEMBLY			18
						19
						20
	1	MODEL CMF300M356NU	DENSITY/FLOW/TEMPERATURE SENSOR (UE)	FISHER-ROSEMOUNT MICRO-MOTION		21
	1	HV-0624, SEE NOTE 5	BALL VALVE, 3"-3 WAY	PBM		22
	1	UE-0621	COB FITTING, 3/4" NPT, W/FLAX PACKING BUSHING & CABLE CLAMP	COMMERICAL		23
	AR		INSTRUMENT CABLE	SEE LEGEND		24
	2	BLUE GARD STYLE 3700	GASKET, 3" 300# RAISED FACE, 1/8" THK COMPRESSED FIBER	GARLOCK		25
						26
	AR		CABLE TIE, 18" LG, NYLON	COMMERICAL		27
						28
						29

PARTS/MATERIAL LIST (CONTINUED TO SHEET 2)

LEGEND:

(ITRS-XX-XX) WIRING RUN NUMBER. SEE ELECTRICAL DRAWING H-2-81899 FOR CABLE TYPE, WIRE NUMBERS AND DESTINATION.

NOTE:

1. FABRICATION AND TESTING SHALL BE IN ACCORDANCE WITH HANFORD SPECIFICATION HS-BS-0084, REV B.
2. HYDROSTATIC TEST AT 480 PSIG.
3. JUMPER WEIGHT IS 775 LB APPROX.
4. USE (1) COAT OF AMERLOCK 400 IN PLACE OF AMERCOAT 187 PRIMER AND AMERCOAT 33, WHERE REQUIRED BY JUMPER FABRICATION SPECIFICATION.
5. VALVE SHALL BE 3"-3 WAY PBM MULT-PORT SERIES, T-PORT 180° TURN, FLOW PATTERN #5, 3" SCHED 40 BW END FITTING, SST, #3" MP-H-39-BW-2/POCOS9 OR APPROVED SUBSTITUTE.

NUMBER	TITLE
H-2-818423	DRAWING LIST

DRAWING TRACEABILITY LIST — REFERENCES — HELD USED ON H-2-818544

REV NO.	DESCRIPTION	REV BY DATE	NON APPROVALS
2	REV TO INCORP ECN W-320-XXX		
1	REV TO INCORP ECN W-320-401		

REVISIONS

CAD FILE B501AR2 — ENG CODE WIN95:ACD2:12.0:SS — UNITS IN — APVD FOR IMPLEMENTATION BY THOMAS M MAY FOR WHC DATE 8-22-95

DESIGNED Ba MEYER sr — DATE — SAFETY CLASS 3 — CSF 506537
DRAWN BY C D JONES — DATE
CHECKED ROGER SCHROEDER — DATE
SAFETY SEE DR/AT FORM
OWNER SEE DR/AT FORM
CUST. DWG SEE DR/AT FORM
LEAD DWG C D JONES — DATE
REVIEW NO. 15

USE CONSTRUCTION

U.S. DEPARTMENT OF ENERGY
RICHLAND OPERATIONS OFFICE
ICF KAISER HANFORD COMPANY

JUMPER ASSEMBLY
PUMP PIT
AY-02A-U11-A-(C)

PROJECT W-320 TANK 241-C-106 SLUICING

SIZE F — BLDG NO. 241-AY — SCALE NO. 8405 — DWG NO. H-2-818501 — REV NO. 2
SCALE SHOWN — JOB NO ER4319 — SHEET 1 OF 2

2 PLOT SCALE: 1=12 — KEHCAD — 1

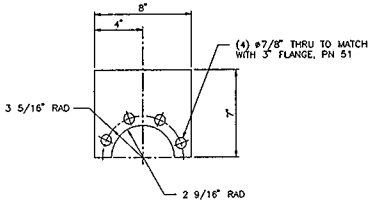

5 BRACKET
SCALE: 3"= 1'-0"

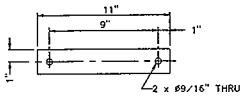

6 BRACKET
SCALE: 3"= 1'-0"

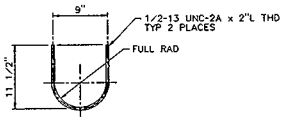

7 U-BOLT
SCALE: 1 1/2"= 1'-0"

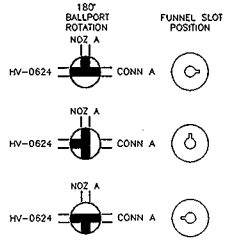

DETAIL B
SCALE: NONE

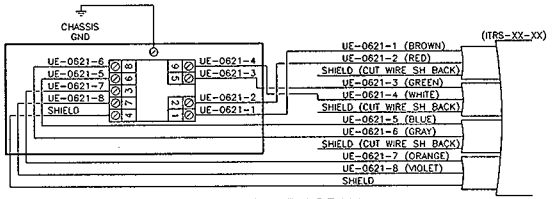

WIRING CONNECTION DIAGRAM
UE-0621

PARTS/MATERIAL LIST (CONTINUED FROM SHEET 1)

QUANTITY REQUIRED		PART/DASH NUMBER	NOMENCLATURE/DESCRIPTION	MATERIAL/REFERENCE	SHEET	ITEM NO.
			(CONT FROM SHEET 1)			
	X		ASSEMBLY		1	1
X	1		SUPPORT FRAME SUB-ASSEMBLY		1	2
	8		STUD BOLT, 3/4"-10UNC-2A x 6" LG	ASTM A 193 GR B8 304		30
	8		STUD BOLT, 3/4"-10UNC-2A x 6 1/2" LG	ASTM A 193 GR B8 304		31
1			MACHING SCREW, 3/4"-10UNC-2A x 3" L HEX HD	ANSI B18.2.1 CS		32
1	64		HEAVY HEX NUT, 3/4"-10UNC-2B	ASTM A 194 GR 8F 303		33
	4		HEX NUT, 1/2"-13UNC-2B	ANSI B18.2.2 CS		34
						35
						36
AR			CHANNEL, C4 x 5.4	ASTM A 36		37
AR			PLATE, 1/2"	ASTM A 36		38
1			PLATE 1/2" x 6" x 6"	ASTM A 36		39
	AR		BAR 1/2" DIA	ASTM A 36		40
						41
						42
	AR		PIPE, 4" SCHED 40S	ASTM A 312 GR TP 304L		43
	AR		PIPE, 2" SCHED 40S	ASTM A 312 GR TP 304L		44
	1		ELBOW, 90° LR 4" SCHED 40S BW	ASTM A 403 WP-S 304L		45
	2		ELBOW, 90° LR 3" SCHED 40S BW	ASTM A 403 WP-S 304L		46
	3		ELBOW, 90° LR 2" SCHED 40S BW	ASTM A 403 WP-S 304L		47
	1		ELBOW, 45° 4" SCHED 40S BW	ASTM A 403 WP-S 304L		48
	1		RDCR ELBOW, 90° LR 4" x 3" SCHED 40S BW	ASTM A 403 WP-S 304L		49
	1		CONC RDCR 3" x 2" SCHED 40S BW	ASTM A 403 WP-S 304L		50
	2		FLANGE, 3" 300# RF WELD NECK	ASTM A 182 GR F 304L		51
	1		ECC RDCR, 4" x 3" SCHED 40S BW	ASTM A 403 WP-S 304L		52
	2		ELBOW, 90° SR 4" SCHED 40S BW	ASTM A 403 WP-S 304L		53

REGISTERED PROFESSIONAL ENGINEER — STATE OF WASHINGTON — 31130 — EXPIRES 3-24-97

USE: CONSTRUCTION
SAFETY CLASS: 3 | REVISION NO. 2 | DATE 02/18/97

DRAWN BY: BA MEYER sr
DESIGN CHKR:
CHECKER:
SAFETY: SEE DR/AT FORM
PHME: SEE DR/AT FORM
QUAL CHKR: SEE DR/AT FORM
LEAD CHKR:

U.S. DEPARTMENT OF ENERGY
Richland Operations Office
FLUOR DANIEL NORTHWEST, INC

JUMPER ASSEMBLY
PUMP PIT
AY-02A-U11-A-(C)

PROJECT: W-320 TANK 241-C-106 SLUICING
ACCT: F | BLDG NO: 241-AY | MECH NO: 8405 | DWG NO: H-2-818501 | REV: 0
SCALE: SHOWN | DIR: 606537 | SHEET 2 of 2

DWG NO	TITLE	REF NUMBER	TITLE
DRAWING TRACEABILITY LIST		REFERENCES	
		NEXT USED ON	

REVISIONS: REV NO | DESCRIPTION | REV BY DATE | CHKR | COMPANY

CADFILE: B501B | CADCODE: WIN95:AC02:12.0:SS

2 PLOT SCALE: 1=12

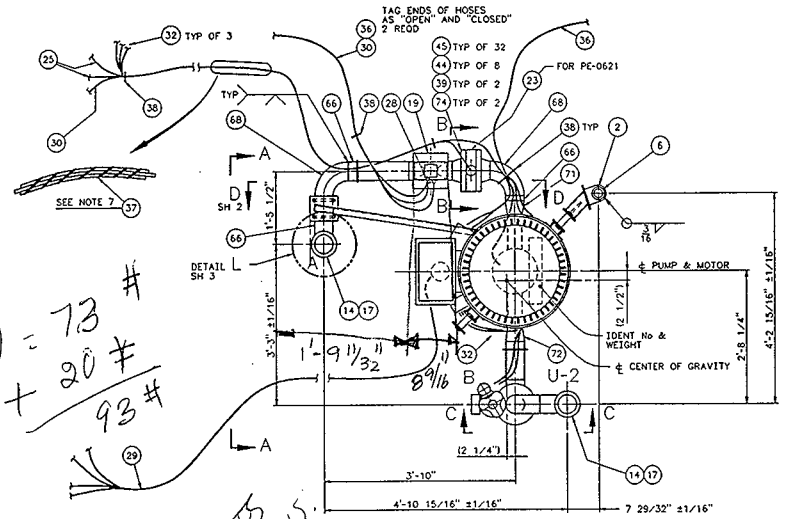

PLAN

W = 73 #
+ 20 #
93 #

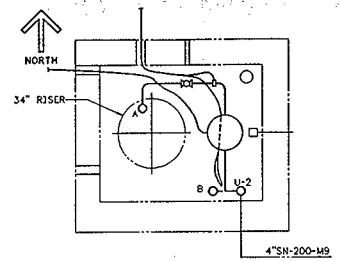

241-AY-02E
SLUICE PIT
KEY PLAN
SCALE: NONE

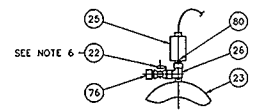

SECTION B-B
SCALE: NONE

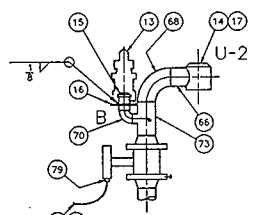

VIEW C-C
SCALE: NONE

NO, I ADDED THIS VALVE TO THE EXISTING SYSTEM NO OTHER CHANGES TO DIMENSIONS. ROGER

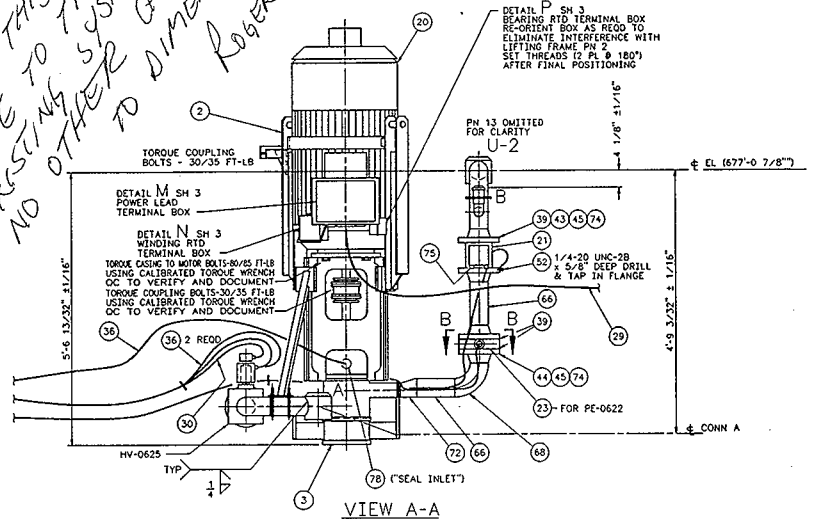

VIEW A-A

1 ASSEMBLY
SCALE: 1"= 1'-0"

ECN: W-320-587

PARTS/MATERIAL LIST							
QUANTITY REQUIRED			PART/DASH NUMBER	NOMENCLATURE/DESCRIPTION	MATERIAL/REFERENCE	SHEET	ITEM NO.
		X	-010	ASSEMBLY			1
	X	1	-020	LIFTING FRAME SUB-ASSY		2	2
X		1	-030	PUMP BASE SUB-ASSY		2	3
							4
	1		-001	PLATE, 3/8" THK	ASTM A 36	3	5
		1	-002	PLATE, 3/8" THK	ASTM A 36	3	6
	1		-003	PLATE, 3/8" THK	ASTM A 36	3	7
	4		-004	PLATE, 3/8" THK	ASTM A 36	3	8
1			-005	PLATE, 1" THK	ASTM A 240 304L	3	9
1			-006	PLATE, 1" THK x 11 5/8" DIA	ASTM A 240 304L		10
							11
							12
		1	H-2-818509-1	JUMPER FLUSH BLANK HEAD			13
		2	H-2-32440-2	CONN, VERT, 4"			14
		1	H-2-90185-2	NOZZLE, MALE, 2"			15
		1	H-2-3194-6	KICKOFF PLATE, 2" ROUND			16
		2	H-2-3997-8	GASKET 4" TYPE III			17
							18
		1	HV-0625 SEE NOTE 10	BALL VALVE 4" -2 WAY	PBM INC		19
		1	P-0622	PUMP, IN-LINE 3" INLET & 3" OUTLET	PROCUREMENT SPEC W-320-P17		20
		1	FE-0621	FLOWMETER, 4"	CONSTRUCTION SPEC W-320-C7		21
		2	SS-43M4	BALL VALVE 1/4"	WHITEY		22
		2	PE-0621 & PE-0622 SEE NOTE 5 & 6	PRESSURE SENSOR, 4"	RED VALVE CO, INC.		23
		1	RB350-250	CONDUIT RED BUSHING, 3 1/2" x 2 1/2"	APPLETON ELECTRIC		24
		2	PE-0621 & PE-0622 SEE NOTE 8	PRESSURE TRANSDUCER, (PE) 1/4" NPT	CONSTR SPEC W-320-C7		25
		2	SS-4-ST	STREET TEE, 1/4" NPT	CAJON		26
		1	CGFP7917	CORD CONNECTOR, 2 1/2"	CROUSE-HINDS		27
		2	CGB196-SG	CGB FITTING, 1/2" NPT, x .625/.750 DIA	CROUSE-HINDS		28
		1	XHHW P62-0504	CABLE, 3C-500 KCM W/ GROUND, RATED FOR 90°C x 30' L	ROCKBESTOS FIREWALL III		29
		2	I46-5700	CABLE, 2 TW SH PR #16 AWG, W/ OVERALL SHIELD PR x 25' L	ROCKBESTOS		30
					ROCKBESTOS		31
		3	I46-0031	CABLE, 3C #16 AWG W/ OVERALL SHIELD x 25' L	ROCKBESTOS		32
		3	CG3293	CGB FITTING, 3/4" NPT x .250/.375 DIA	CROUSE-HINDS		33
		1	RB75-50	REDUCING BUSHING, 3/4" x 1/2"	APPLETON		34
							35
		3	Y1GT0404MC04MC-300	HOSE ASSY 1/4" ID FLEX x 25' L	IMPERIAL EASTMAN		36

(CONT ON SHEET 2)

NOTES:

1. FABRICATION AND TESTING SHALL BE IN ACCORDANCE WITH HANFORD SPECIFICATION HS-BS-0084, REV B.
2. HYDROSTATIC TEST AT 480 PSIG.
3. JUMPER WEIGHT IS 4170 LB APPROX.
4. ROUTE CABLES APPROXIMATELY AS SHOWN AND SECURE TO SUPPORT STEEL W/PN 38. AVOID IMPACT WRENCH AND LIFTING BAIL AREAS.
5. PRESSURE SENSOR (PN 23) SHALL BE SERIES 40, FOR CLASS 300 FLANGES 316 SST, EPDM SLEEVES WITH 1/4" NPT PRESSURE TAP. FURNISH WITH 100 ML OF SILICONE OIL IN SEPARATE CONTAINER.
6. SEE CONSTRUCTION SPEC W-320-C7, SECTION 13440 FOR FILLING INSTRUCTION AFTER ASSEMBLY. AFTER FILLING, REMOVE HANDLE FROM BALL VALVE (PN 22).
7. TIE EACH END OF TEFLON SPIRAL WRAPPING (PN 37) WITH NYLON CABLE TIES (PN 38).
8. TRIM CABLES FURNISHED WITH PN 25 TO 25' LONG PRIOR TO INSTALLATION.
9. USE (1) COAT OF AMERLOCK 400 IN PLACE OF AMERCOAT 187 PRIMER AND AMERCOAT 33, WHERE REQUIRED BY JUMPER FABRICATION SPECIFICATION.
10. VALVE SHALL BE 4"-2 WAY PBM SP SERIES, 4" SCHED 40 BW END FITTINGS, SST, 4" SP-H-40BW-2/59 W/MODEL DDA-80-84 PNEUMATIC ACTUATORS, 90° ROTATION AND A DML-50 SERIES VALVE POSITION INDICATORS, 2-POSITION "OPEN & CLOSED", IN AN EXPLOSION PROOF HOUSING (NEMA 7). ASSEMBLED AS (1) UNIT OR AN APPROVED SUBSTITUE.

STATE OF WASHINGTON REGISTERED PROFESSIONAL ENGINEER 21433 — EXPIRES 5-3-96

REV NO.	DESCRIPTION	REV BY DATE	REV APPROVALS
2	REV TO INCORP ECN W-320-587		
1	W-320-439,-414 & -380 REV TO INCORP ECNS		

H-2-818423 DRAWING LIST SH 6

NUMBER	TITLE
H-2-818545	

USE: CONSTRUCTION
ECN 606537

DESIGNED Ba MEYER 97 — SAFETY CLASS 3
DRN CHKR C D JONES 8-16-95
ENGINEER ROGER SCHEDDER 8-16
SUPERV SEE DR/AT FORM
CHKR SEE DR/AT FORM
DISC CHKR SEE DR/AT FORM
LEAD CHKR C D JONES 8-16-95
APVD FOR REVIEW 19 8-24-95
APPROVED FOR IMPLEMENTATION THOMAS H MAY

U.S. DEPARTMENT OF ENERGY
RICHLAND OPERATIONS OFFICE
ICF KAISER HANFORD COMPANY

JUMPER ASSEMBLY
SLUICE PIT
AY-02E-U2-A-(B)

PROJECT W-320 TANK 241-C-106 SLUICING

SIZE F | DWG NO. 241-AY | SHEET NO. 8405 | DWG NO. B503AR2 | REV NO. 2
SCALE SHOWN | JOB NO. ER4319 | SHEET 1 OF 3

CAD FILE B503AR2 | CAD CODE W1N95:ACD2-12.C.SS | SHEET N/A | TYP X-HC | DATE 8-22-95

PLOT SCALE: 1=12 | KEMCAD

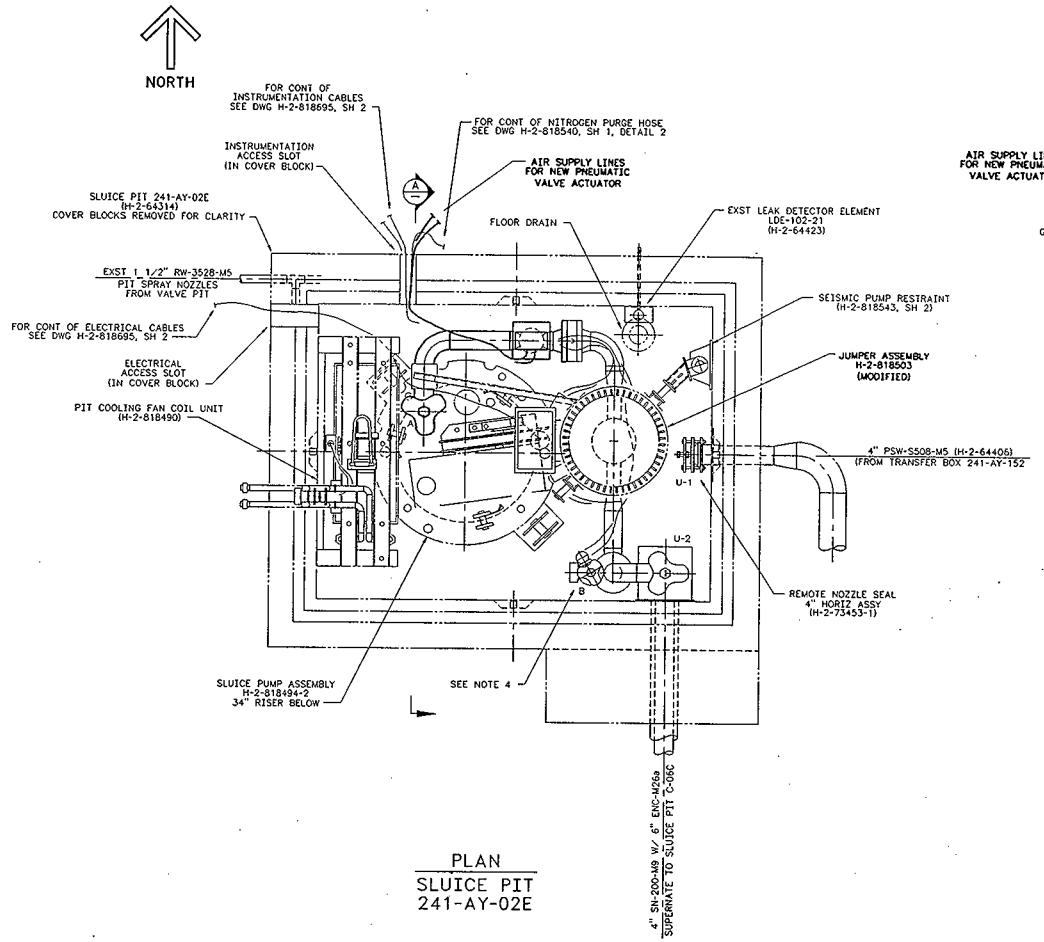

PLAN
SLUICE PIT
241-AY-02E

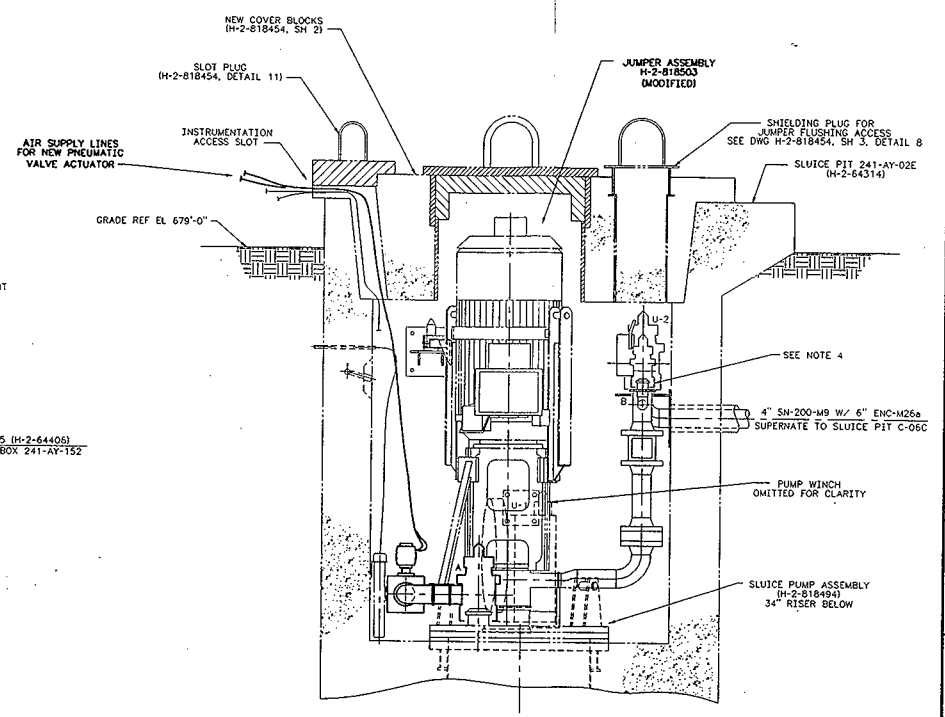

A SECTION

NOTE:

1. FOR GENERAL NOTES, LEGEND AND KEY PLAN, SEE H-2-818518.
2. FOR CONTINUATION OF NEW LINES SEE H-2-818540.
3. FOR CONTINUATION OF EXISTING LINES SEE H-2-64406.
4. JUMPER FLUSHING BLANK HEAD (H-2-818509) WILL BE FURNISHED WITH AND INCLUDED IN THE BALANCE OF JUMPER PER DRAWING H-2-818503. THE BLANK HEAD WILL BE REMOVED AND REPLACED WITH THE JUMPER FLUSHING SUPPLY HEAD PER DRAWING H-2-818510 WHEN FLUSHING IS REQUIRED.

STATE OF WASHINGTON 31136 REGISTERED PROFESSIONAL ENGINEER
EXPIRES: 3-24-97

H-2-64314	PIT CONC STRUCT	H-2-818423	DRAWING LIST		
NUMBER	TITLE	NUMBER	TITLE		
	DRAWING TRACEABILITY LIST	NEXT USED ON	REFERENCED		

REV NO.	DESCRIPTION	REV BY DATE	ECN APPROVALS	UPD FOR INFO ONLY FOR DATE
1	GEN DWG REV PER ECN W-320-XXX REV TO INCORP ECN W-320-380	RWS 8/16/96		

CAD FILE 45AR11 CAD CODE WIN95:ACD2:12.0:SS

DESIGNED	R W SCHROEDER	SAFETY CLASS	3
DRGN ENGR	C D JONES 9-13-1995		
CHECKED	ROGER SCHROEDER 9-14-1995		
SAFETY	SEE DR/AT FORM		
STRUCT	SEE DR/AT FORM		
ELEC ENGR	SEE DR/AT FORM		
CAD ENGR	C D JONES 9-13-1995		
REVIEW NO.	3		

USE CONSTRUCTION
CH 606537

U.S. DEPARTMENT OF ENERGY
RICHLAND OPERATIONS OFFICE
ICF KAISER HANFORD COMPANY

PIPING
JUMPER ARRANGEMENT
SLUICE PIT AY-02E

PROJECT W-320 TANK 241-C-106 SLUICING

SIZE	BLDG NO.	SHEET NO.	DWG NO.	REV NO.
F	241-AY	8404	45AR11	1

SCALE 1" = 1'-0" JOB NO. ER4319 SHEET 1 OF 1

PREPARED FOR IMPLEMENTATION BY THOMAS H MAY
PDP WHC DATE 8-22-95

2 PLOT SCALE: 1=12 KEHCAD 1

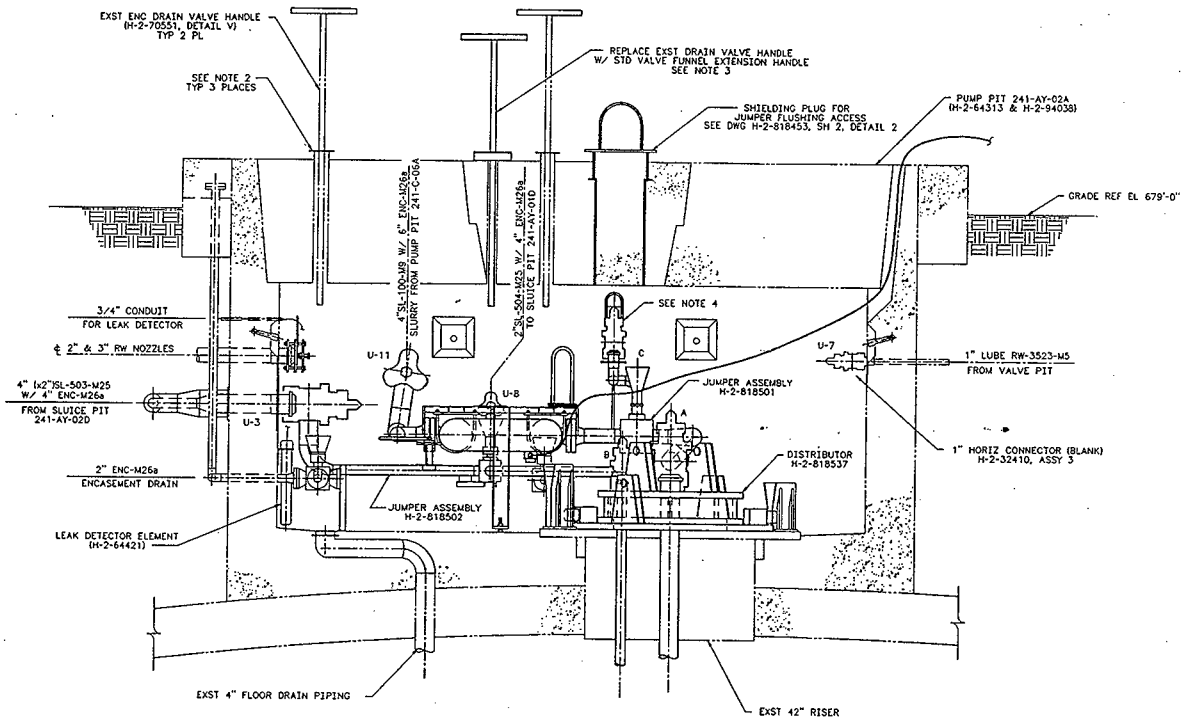

A SECTION
SH 1

NOTES:

1. FOR NOTES, SEE SHEET 1.
2. IF EXISTING TEE HANDLES DO NOT INDICATE TOTAL HANDLE WEIGHT (20 LBS), PAINT 1/2" HIGH BLACK LETTERS ON A YELLOW BACK GROUND, ON THE VALVE INDICATOR DISK.
3. TEE HANDLE SHALL BE PER H-2-90172, ASSY 1, TYPE B, 3 WAY VALVE FLOW PATTERN B-C-D 180° ROTATION. PARTS #7 AND #13 ARE NOT REQUIRED FOR THIS APPLICATION. USE (1) COAT OF AMERLOCK 400 IN PLACE OF AMERCOAT 187 PRIMER AND AMERCOAT 33. PAINT WEIGHT (30 LBS) SAME AS NOTE 2. VALVE IDENT NUMBER SHALL BE "HV-0621".

NUMBER	TITLE
DRAWING TRACEABILITY LIST	

NUMBER	TITLE
NEXT USED #n	REFERENCES

REV NO.	DESCRIPTION	REV BY DATE	ECN APPROVALS	APVD FOR SUPL/INC PER DATE
2	REV TO INCORP ECN W-320-			
1	REV TO INCORP ECN W-320-488			

REVISIONS

CAD FILE B544BR2 CAD CODE W1N95:ACD2:12.0:SS

APVD N

APPROVED FOR INTERPRETATION BY THOMAS H MAY FOR WHC 8-22-95

PLOT SCALE: 1=12 KEHCAD

DESIGNED	Ba MEYER sr	DATE	
DRAWN BY	C D JONES	6-15-95	
CHECKED	ROGER SCHROEDER	6-15-95	
SAFETY	SEE DR/AT FORM		
ENVIR	SEE DR/AT FORM		
QUAL CHECK	SEE DR/AT FORM		
LAB CHECK	C D JONES	6-15-95	
REVIEW NO.	10		

SAFETY CLASS 3

USE CONSTRUCTION

CDF 606537

U.S. DEPARTMENT OF ENERGY
RICHLAND OPERATIONS OFFICE
ICF KAISER HANFORD COMPANY

PIPING
JUMPER ARRANGEMENT
PUMP PIT AY-02A

PROJECT W-320 TANK 241-C-106 SLUICING

SIZE	SYSTEM NO.	DWG NO.	DWG NO.	REV NO.
F	241-AY	8404	H-2-818544	1

SCALE 1"=1'-0" JOB NO. ER4319 SHEET 2 OF 2

STATEMENT: 199-H3-03-0600

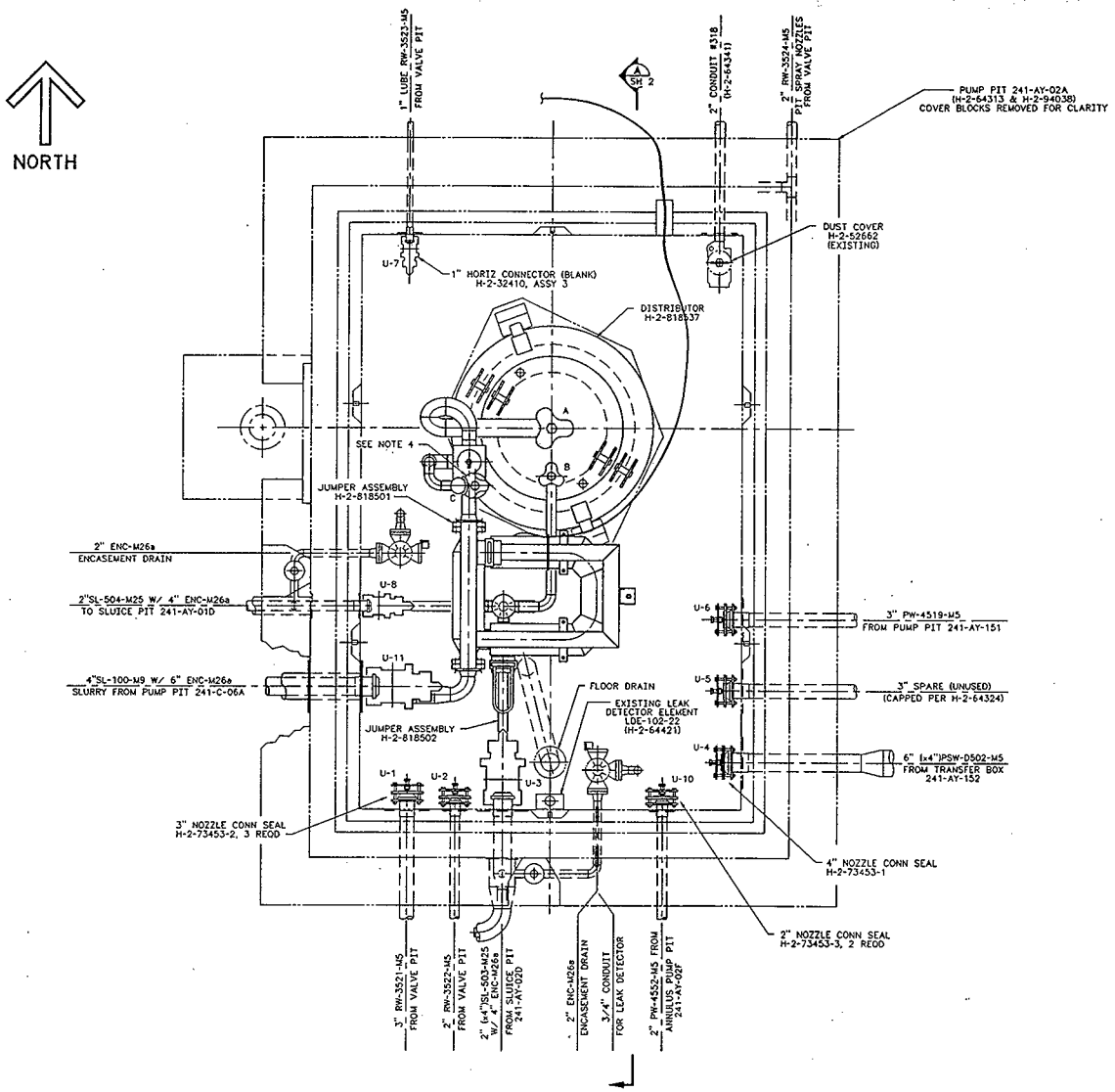

PLAN
PUMP PIT
241-AY-02A

NOTES:

1. FOR GENERAL NOTES, LEGEND AND KEY PLAN, SEE H-2-818518.
2. FOR CONTINUATION OF NEW LINES SEE H-2-818540.
3. FOR CONTINUATION OF EXISTING LINES SEE H-2-64406 & H-2-70764.
4. JUMPER FLUSHING BLANK HEAD (H-2-818509) WILL BE FURNISH WITH AND INCLUDED IN BALANCE OF JUMPER PER DRAWING H-2-818501. BLANK HEAD WILL BE REMOVED AND REPLACED WITH THE JUMPER FLUSHING SUPPLY HEAD PER DRAWING H-2-818510 WHEN FLUSHING IS REQUIRED.

H-2-70768	PIT MODS	H-2-818423 SH 6	DRAWING LIST
H-2-64313	PIT CONC STRUCT		

REV NO.	DESCRIPTION	BAM 2/19/97
1	REV TO INCORP ECN W-320-XXX	

CAD FILE B544AR1 CAD CODE 28:IBM:AC02:12.0:NN

DESIGNED Ba MEYER sr
SAFETY CLASS 3
CONSTRUCTION
U.S. DEPARTMENT OF ENERGY
RICHLAND OPERATIONS OFFICE
ICF KAISER HANFORD COMPANY
SEE DR/AT FORM
PIPING
JUMPER ARRANGEMENT
PUMP PIT AY-02A
W-320 TANK 241-C-106 SLUICING
F 241-AY 8404 H-2-818544 1
SCALE 1"=1'-0" JOB NO ER4319 SHEET 1 OF 2
PLOT SCALE: 1=12 KEHCAD

W320-27-030

W320 Tank 241-C-106 HVAC Seal Loop

KAISER ENGINEERS HANFORD | **CALCULATION IDENTIFICATION AND INDEX** | Page i of iii | Date 3-10-95

This sheet shows the status and description of the attached Design Analysis sheets.

Discipline MECHANICAL WO/Job No. W320/ER #819 Calculation No. W320-27-30

Project No. & Name W320 TANK 241-C-106 HVAC SEAL LOOP

Calculation Item

These calculations apply to:

Dwg. No. H-2-818477 Rev. No. 0

Dwg. No. Rev. No.

Other (Study, CDR) Rev. No.

The status of these calculations is:

- ☐ Preliminary Calculations
- ☑ Final Calculations
- ☐ Check Calculations (On Calculation Dated)
- ☐ Void Calculation (Reason Voided)

Incorporated in Final Drawings? ☐ Yes ☐ No

This calculation verified by independent "check" calculations? ☐ Yes ☑ No

Original and Revised Calculation Approvals:

	Rev. 0 Signature/Date	Rev. 1 Signature/Date	Rev. 2 Signature/Date
Originator	AW McMichael 3-10-95		
Checked by	[illegible] 3/10/95		
Approved by	[illegible] 3/10/95		
Checked Against Approved Vendor Data	[illegible] 4.11.98		

INDEX

Design Analysis Page No.	Description
i	calculation I.D. & index
ii	calculation cross index
iii	Design verification
1	objectives; References, Assumptions
2	calculations

KEH 0378.00 (06/92)

CALCULATION CROSS INDEX (Typical)

Subject Calculation No. W320-27-30

Subject Calculation Revision No.	Superceded by Calculation No.	These interfacing calculation/documents provide input to the subject calculation, and if revised may require revision of the subject calculation.		Results and conclusions of the subject calculation are used in these interfacing calculations and/or documents.		Does the output interface calculation/ documents require revision?		Has the output interface calculation/ documents been revised?		Discipline manager's signature and date indicating evaluation complete.
		Calculation/Document No.	Revision No.	Calculation/Document No.	Revision No.	Yes	No	Yes	No	

KEH 1975.00 (12/88)

DESIGN VERIFICATION SCREENING CRITERIA

Project/Document No. W320-27-30

When the design or design change affects hardware, formal design verification must be performed if one or more of the following questions must be answered affirmatively (YES).

YES	NO	
	✓	1. Does the design or design change involved meet the established criteria to be considered Safety Class 1?
	✓	2. Does this design or design change cause or permit changes to Safety Class 1 instrument or alarm setpoints outside of previously approved operational limits?
	✓	3. Does this design or design change significantly affect the nuclear or environmental safety consequences of a malfunction or failure of the structure, system, or component?
	✓	4. Does this design or design change involve or change design that has previously undergone formal design verification?

C D Jones — Assigned Lead Engineer — 3/10/95 — Date

J. L. Evans — Responsible Discipline Manager — 4/11/98 — Date

Original Design Package Distribution:

- Project Manager
- Design Verification Officer
- Engineering Document Control

Design Change Distribution:

- Attach to Engineering Change Notice

KEH-1981.00 (09/92)

Client WHC
Subject HVAC Seal Loop

Location: Tank 241-C-106

WO/Job No. ER4319/W320
Date 2/6/95 By AW McNichols
Checked 3/10/95 By N. JUPLO
Revised By

OBJECTIVE:

Determine that the weight of the overhanging seal loop will not over stress the 6 inch vertical pipe flange weld.

DESIGN INPUTS:

Criteria and Sources:

Project W320, Tank 241-C-106 Slucing, Functional Design Criteria.
(WHC document No. WHC-SD-W320-FDC-001, Rev. 0)

References/Souces:

1. Drawing No. H-2-818477, Rev. 0.
2. Flowline Catalog No.92, Fittings and Flanges.
3. Piping Engineering, 3rd edition.
4. Design of Welded Structures, Blodgett.
5. ASME B31.1, 1993
6. Machinery Handbook, 24 th edition.

Method Used:

Math Cad

Assumptions:

The strength of the pipe will be 16,700 PSI.

The strength of the welds will be the same strength as the pipe material.

Two 90 degree elbows and a 3" section of 6" dia. pipe will be filled with water.

Client WHC
Subject HVAC Seal Loop
Location: Tank 241-C-106

WO/Job No. ER4319/W320
Date 2/6/95 By AW McNichols
Checked 3/10/95 By N. JUPLO
Revised By

Calculations:

Determine that the bottom weld on the Pressure Relief Seal Loop 6" flange is strong enough to withstand the moment imposed by the cantilevered seal loop piping. Ref. 1, Sh. 2

Ref. 6, Pg.164 Torus

Ref. 2, Pg. 20

$R := 6 \cdot in \qquad r := 3.03 \cdot in$

Weight of water in 180 degree return $= W_{wr} := \frac{2 \cdot \pi^2 \cdot R \cdot r^2}{2} \cdot 0.036 \cdot \frac{lb}{in^3}$ $\qquad W_{wr} = 19.572 \cdot lb$

Weight of water, 3" section of 6" pipe = $W_3 := 12.51 \cdot \frac{lb}{ft} \cdot 3 \cdot in \cdot \frac{1}{12} \cdot \frac{ft}{in}$ $\qquad W_3 = 3.127 \cdot lb$

$W_{wr} + W_3 = 22.7 \cdot lb$

Weight of 180 degree return = $W_{180} := 35 \cdot lb$ Ref. 2, Pg. 20 2 x 45 ell.

Weight of 90 degree elbow = $W_{90} := 17.5 \cdot lb$ Ref. 2, Pg. 20

Weight of 3" of 6" dia. pipe = $W_6 := 4.75 \cdot lb$ Ref. 3, Pg. 9

Moment arm from 180 return to centerline of vertical pipe $= M_1 := 21 \cdot in$ Ref. 1, Sh. 2

Moment arm from 3" - 6" dia. pipe to centerline of vertical pipe $= M_2 := 7.5 \cdot in$

Moment arm from 180 return (attached to vertical pipe) to centerline of vertical pipe $= M_3 := 6 \cdot in$

$M_{24} := W_{180} \cdot M_1 \qquad M_{7.5} := \left(2 \cdot W_{90} + W_6 + W_{wr} + W_3\right) \cdot M_2$

For simplicity the weight of both 180's is included in M_9.

$M_9 := \left(2 \cdot W_{180} + 2 \cdot W_{90} + W_6 + W_{wr} + W_3\right) \cdot M_3$

Because the weight vector is small it was not included in M_{tot}.

Moment Total = $M_{tot} := \left[\left(M_{24} + M_{7.5}\right)^2 + M_9^2\right]^{\frac{1}{2}} \qquad M_{tot} = 1.442 \cdot 10^3 \cdot lb \cdot in$

Determine weld strength. Ref. 4, Pg. 7.4 - 6 & 7

$S_w := \frac{\pi \cdot d^2}{4} \qquad d := 6.345 \cdot in$

Weld line stress = $\sigma := \frac{M_{tot}}{S_w} \qquad \sigma = 45.608 \cdot \frac{lb}{in}$

Minimum weld size = $W_{min} := \frac{\sigma}{16700 \cdot \frac{lb}{in^2}} \qquad W_{min} = 0.003 \cdot in$ Ref. 5, Pg. 172 Assume 304L Material

Because of the light loads column buckling will not be considered.

0.003 in weld < Normal weld size on 6" pipe, Strength OK

W320-27-031

Booster Pump Restraint Analysis

KAISER ENGINEERS HANFORD

CALCULATION IDENTIFICATION AND INDEX

Date 2-15-95

This sheet shows the status and description of the attached Design Analysis sheets.

Discipline 27 - Piping WO/Job No. ER4319/ W320 Calculation No. W320 - 27 - 31

Project No. & Name W320: Tank 241-C-106 Sluicing

Calculation Item Booster Pump Restraint Analysis

These calculations apply to:

Dwg. No. H-2-815503 Rev. No. 0

Dwg. No. H-2-818543 Rev. No. 0

Other (Study, CDR) _____ Rev. No. _____

The status of these calculations is:

- ☐ Preliminary Calculations
- ☒ Final Calculations
- ☐ Check Calculations (On Calculation Dated _____)
- ☐ Void Calculation (Reason Voided _____)

Incorporated in Final Drawings? ☒ Yes ☐ No

This calculation verified by independent "check" calculations? ☐ Yes ☒ No

Original and Revised Calculation Approvals:

	Rev. 0 Signature/Date	Rev. 1 Signature/Date	Rev. 2 Signature/Date
Originator	Robert C. Campbell 2-15-95		
Checked by	[illegible] 3-9-95		
Approved by	[illegible] 3/9/95		
Checked Against Approved Vendor Data	M. Ahmed 4.10.98		

INDEX

Design Analysis Page No.	Description
i	Calculation Identification and Index
ii	Calculation Cross Index
iii	Design Verification Screening Criteria
1.	Objective, Criteria, Given Data, Assumptions, Methods, References, Calculations
5.	Conclusions
Appendix A	Images 3-D Analysis
Appendix B	

KEH 0378.00 (06/92)

CALCULATION CROSS INDEX (Typical)

Subject Calculation No. W320-27-31

Subject Calculation Revision No.	Superceded by Calculation No.	These interfacing calculation/documents provide input to the subject calculation, and if revised may require revision of the subject calculation.		Results and conclusions of the subject calculation are used in these interfacing calculations and/or documents.		Does the output interface calculation/ documents require revision?		Has the output interface calculation/ documents been revised?		Discipline manager's signature and date indicating evaluation complete.
		Calculation/Document No.	Revision No.	Calculation/Document No.	Revision No.	Yes	No	Yes	No	
0		H-2-818503	0				✓		✓	D L Evans 4/2/98
0		H-2-818543	0				✓		✓	D L Evans 4/2/98

DESIGN VERIFICATION SCREENING CRITERIA

Project/Document No. W320-27-31
Pg iii of iii

When the design or design change affects hardware, formal design verification must be performed if one or more of the following questions must be answered affirmatively (YES).

YES	NO	
	X	1. Does the design or design change involved meet the established criteria to be considered Safety Class 1?
	X	2. Does this design or design change cause or permit changes to Safety Class 1 instrument or alarm setpoints outside of previously approved operational limits?
	X	3. Does this design or design change significantly affect the nuclear or environmental safety consequences of a malfunction or failure of the structure, system, or component?
	X	4. Does this design or design change involve or change design that has previously undergone formal design verification?

C P Jones — Assigned Lead Engineer — Date: 3/9/95

D. L. Evans — Responsible Discipline Manager — Date: 4/10/98

Original Design Package Distribution:

- Project Manager
- Design Verification Officer
- Engineering Document Control

Design Change Distribution:

- Attach to Engineering Change Notice

KEH-1981.00 (09/92)

Client WHC
Subject Booster Pump Restraint Analysis
Location: Sluice Pit AY-02E

WO/Job No. ER4319/W320
Date 2-15-95 **By** Rodney C. Campbell
Checked 3-9-95 **By** J. JUPLO
Revised **By**

OBJECTIVE:

The objective of this calculation is to verify that the pump restraint system is adequate to keep the booster pump in pit AY-02E from overturning during a seismic event.

CRITERIA:

1. Functional Design Criteria WHC-SD-W320-FDC-001, Rev. 2.
2. Standard Design Criteria 4.1, Rev. 12, Design Loads for Facilities.
3. Standard Design Criteria 4.2, Rev. 0, Design and Installation of Expansion Anchors.
4. W320-QAPP-001, Rev. 0, Project Specific Quality Assurance Plan.

GIVEN DATA:

1. The pit is safety class 1.
2. The horizontal components of the acceleration due to an earthquake are 0.2.
3. The compression strength of concrete in pit is 3000 psi.

ASSUMPTIONS:

None

METHODS:

1. Hand calculations using Mathcad.

REFERENCES:

1. Drawing H-2-818503, Rev. 0.
2. Drawing H-2-818543, Rev. 0.
3. Drawing H-2-818545, Rev. 0.
4. AISC Manual of Steel Construction, Ninth Ed.
5. Calculation W320-27-029, Rev. 0,
6. Blodgett, Design of Welded Structures

CALCULATION:

$E_s := 29 \cdot 10^6 \cdot psi$	Modulus of Elasticity for steel. Ref. 4.
$F_{a36} := 22000 \cdot psi$	Allowable stress in A36 steel. Ref. 4.
$F := 2774 \cdot lbf$	Dynamic load at center of gravity of pump motor. Ref. 5.
$A_{cc} := 1.21 \cdot in^2$	Cross-sectional area of C3 x 4.1 channel. Ref. 4.
$A_{ch} := 1.5 \cdot in^2$	Cross-sectional area of 3" x 1/2" plate. Ref. 1
$D_h := 26 \cdot in$	Diameter of hoop made from rolled plate. Ref. 1, Sht. 2.
$W_h := 3 \cdot in$	Width of hoop made from rolled plate. Ref. 1, Sht. 2.
$T_h := .5 \cdot in$	Thickness of hoop made from rolled plate. Ref. 1, Sht. 2.

Client WHC
Subject Booster Pump Restraint Analysis

Location: Sluice Pit AY-02E

WO/Job No. ER4319/W320
Date 2-15-95 **By** Rodney C. Campbell
Checked 3-9-95 **By** N. WUPLO
Revised **By**

1. Verify that stress in hoop is less than allowable.

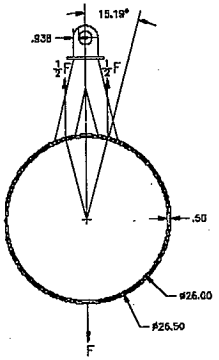

Figure 1

The stress in the hoop was analyzed by Images 3-D and found to be within acceptable level. See appendix A.

2. Verify that stress in C3 x 4.1 channel is below the allowable.

Assume that the two channels shown are replaced by one channel of the same size, colinear with force. If one channel can carry the load, two in the configuration shown can carry the load.

$\sigma := \frac{F}{A_{cc}}$ Formula for calculating stress in tension.

$\sigma = 2292.56 \cdot psi$ Calculated stress in channel.

$\sigma < F_{a36} = 1$ The calculated stress is less than the stress allowable. The two channels can carry the seismic load.

3. Verify that welds on each end of channels can carry the load.

Calculate the required size of the fillet weld holding the plates on each end.

Assume that the two channels shown are replaced by one channel of the same size, colinear with force. If the welds of one channel can carry the load, the welds in the configuration shown can carry the load.

$\omega := .1875 \cdot in$ Size of fillet weld. Ref. 1, Sht 2.

$l := 3 \cdot in + 2 \cdot 1.41 \cdot in$ Conservative length of weld. Weld all around C3 x 4.1 channel.

$\tau := 9600 \cdot psi$ Allowable shear stress. Ref. 6, Chapter 7, Table 6.

$f_t := \frac{F}{l}$ $f_t = 476.63 \cdot \frac{lbf}{in}$

$\omega_r := \frac{f_t}{\tau}$ Required size of fillet weld to carry load in tension. Ref. 6, Chapter 7.

$\omega_r = 0.0496 \cdot in$ Calculated size of the fillet weld required to carry the load.

Client WHC
Subject Booster Pump Restraint Analysis

Location: Sluice Pit AY-02E

WO/Job No. ER4319/W320
Date 2-15-95 **By** Rodney C. Campbell
Checked 3-9-95 **By** N. JUPLO
Revised **By**

$\omega_r < \omega = 1$ This weld is strong enough to carry the maximum load.

The welds on each end of the channels are strong enough to carry the load imposed during a seismic event.

4. Verify that the weld holding item 46 (bar) to the plate attached on the end of the channels is adequate to carry the load.

Calculate the required size of the fillet weld holding the bar to the plate.

$\omega := .1875 \cdot in$ Size of fillet weld. Ref. 1, Sht 2.

$l := 2 \cdot 3 \cdot in$ Conservative length of weld. Weld all around bar.

$\tau := 9600 \cdot psi$ Allowable shear stress. Ref. 6, Chapter 7, Table 6.

$f_t := \frac{F}{l}$ $f_t = 462.33 \cdot \frac{lbf}{in}$

$\omega_r := \frac{f_t}{\tau}$ Required size of fillet weld to carry load in tension. Ref. 6, Chapter 7.

$\omega_r = 0.0482 \cdot in$ Calculated size of the fillet weld required to carry the load.

$\omega_r < \omega = 1$ This weld is strong enough to carry the maximum load.

The weld attaching the bar to the plate is strong enough to carry the load imposed during a seismic event.

5. Verify that the pin will not shear the bar during a seismic event.

$A := 2 \cdot in \cdot T_h$ Area of plate carrying load.

$\sigma := \frac{F}{A}$

$\sigma = 2774 \cdot psi$ Calculated stress.

$F_{a36} = 22000 \cdot psi$ Allowable stress.

$\sigma < F_{a36} = 1$

The allowable stress is greater than the calculated stress. The pin will not pull through the bar during a seismic event.

The plate that the pin is attached to (Ref. 2, Item 3) is 0.5" thick. The pin will not shear the plate during a seismic event nor will the pin shear since it has the same area.

6. Verify that the weld holding the plate with the pin (Ref. 2, Item 3) to the plate attached to the pit wall (Ref. 2, Item 2) is capable carrying the load imposed during an earthquake.

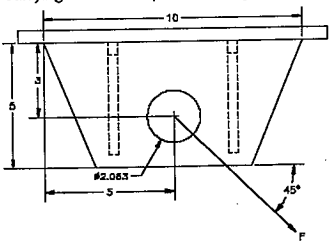

Figure 2

Client WHC
Subject Booster Pump Restraint Analysis

Location: Sluice Pit AY-02E

WO/Job No. ER4319/W320
Date 2-15-95 **By** Rodney C. Campbell
Checked 3-9-95 **By** N. Jupus
Revised **By**

The weld is subjected to the combined loading of a tensile load, shear load and bending.

$\omega := .1875 \cdot in$ Size of fillet weld. Ref. 2, Sht. 2.

$l := 10 \cdot in$ Length of weld.

$a_m := 3 \cdot in$ Length of moment arm.

$\tau := 9600 \cdot psi$ Allowable shear stress. Ref. 6, Chapter 7, Table 6.

$f_t := \frac{F \cdot \sin(-45)}{l}$ $f_t = -236.04 \cdot \frac{lbf}{in}$ Calculated tensile load per inch of weld.

$f_v := \frac{F \cdot \cos(-45)}{l}$ $f_v = 145.72 \cdot \frac{lbf}{in}$ Calculated shear load per inch of weld.

$S_w := \frac{l^2}{3}$ $S_w = 33.33 \cdot in^2$ Section modulus of weld treating it as a line. Ref. 6, Table 5.

$M := F \cdot \cos(-45) \cdot a_m$ $M = 4371.73 \cdot lbf \cdot in$ Calculated moment on weld.

$f_m := \frac{M}{S_w}$ $f_m = 131.15 \cdot \frac{lbf}{in}$ Calculated bending load per inch of weld.

$f_r := \sqrt{f_t^2 + f_v^2 + f_m^2}$ $f_r = 306.84 \cdot \frac{lbf}{in}$ Calculated combined load per inch of weld.

$\omega_r := \frac{f_r}{\tau}$ Required size of fillet weld to carry combined load. Ref. 6, Chapter 7.

$\omega_r = 0.032 \cdot in$ Calculated size of the fillet weld required to carry the load.

$\omega_r < \omega = 1$ This weld is strong enough to carry the maximum load.

7. Verify that the expansion anchors attaching the plate to the pit wall are adequate to carry the load.

A. Verify the edge distance to obtain maximum allowable load.

The minimum required edge spacing to obtain maximum allowable load is 6 3/4" for shear and 5" for tension. The actual edge distances are greater than this (Ref. 2). The maximum allowable load can be used.

B. Verify the bolt spacing to obtain maximum allowable load.

The minimum required bolt spacing to obtain maximum allowable load is 6". The actual bolt spacing is 9" (Ref. 2). The maximum allowable load can be used.

C. Verify that the load imposed does not exceed the maximum allowable load.

$V_a := 1470 \cdot lbf$ Allowable shear load per bolt. (SDC 4.2)

$T_a := 1230 \cdot lbf$ Allowable tension load per bolt. (SDC 4.2)

Client WHC
Subject Booster Pump Restraint Analysis

Location: Sluice Pit AY-02E

WO/Job No. ER4319/W320
Date 2-15-95 **By** Rodney C. Campbell
Checked 3-9-95 **By** N. JUPLO
Revised **By**

$$V := \frac{F \cdot \cos(45)}{4}$$

$V = 364.31 \cdot lbf$ Calculated shear load per bolt.

$$T := \frac{F \cdot \sin(45)}{4} + \frac{F \cdot \cos(45) \cdot 3 \cdot in}{2 \cdot 9 \cdot in}$$

$T = 832.98 \cdot lbf$ Calculated tension load per bolt.

$$\frac{V}{V_a} + \frac{T}{T_a} = 0.93$$

The combined load is less than the allowable combined load (by the sum of the loads divided by the allowable being less than one). The anchor bolts are adequate to carry the seismic load.

CONCLUSIONS:

The design of the seismic restraint system is adequate to carry the load.

APPENDIX A

========== I M A G E S 3 D ==========
= Copyright (c) 1984 Celestial Software Inc. =
==========

CHECK GEOMETRY Version 2.0 07/01/90

1

MATERIAL PROPERTIES

Material No	Modulus of Elasticity	Weight Density	Coeff of Thermal Exp.	Poisson's Ratio	Shear Web Modulus
1	3.00000E+07	2.83000E-01	6.33000E-06	3.00E-01	0.00000E+00

NODE COORDINATES

Node	X-Coord.	Y-Coord.	Z-Coord.
1	0.00000E+00	0.00000E+00	0.00000E+00
2	4.14310E-01	0.00000E+00	3.27960E+00
3	1.63120E+00	0.00000E+00	6.35313E+00
4	3.57423E+00	0.00000E+00	9.02746E+00
5	6.12128E+00	0.00000E+00	1.11346E+01
6	9.11234E+00	0.00000E+00	1.25421E+01
7	1.23595E+01	0.00000E+00	1.31615E+01
8	1.56586E+01	0.00000E+00	1.29539E+01
9	1.88025E+01	0.00000E+00	1.19324E+01
10	2.15935E+01	0.00000E+00	1.01611E+01
11	2.38564E+01	0.00000E+00	7.75142E+00
12	2.54489E+01	0.00000E+00	4.85464E+00
13	2.62710E+01	0.00000E+00	1.65283E+00
14	2.62710E+01	0.00000E+00	-1.65283E+00
15	2.54489E+01	0.00000E+00	-4.85464E+00
16	2.38564E+01	0.00000E+00	-7.75142E+00
17	2.15935E+01	0.00000E+00	-1.01611E+01
18	1.88025E+01	0.00000E+00	-1.19324E+01
19	1.56586E+01	0.00000E+00	-1.29539E+01
20	1.23595E+01	0.00000E+00	-1.31615E+01
21	9.11234E+00	0.00000E+00	-1.25421E+01
22	6.12129E+00	0.00000E+00	-1.11346E+01
23	3.57423E+00	0.00000E+00	-9.02747E+00
24	1.63121E+00	0.00000E+00	-6.35313E+00
25	4.14313E-01	0.00000E+00	-3.27960E+00
26	1.31875E+01	0.00000E+00	0.00000E+00

========== I M A G E S 3 D ==========
= Copyright (c) 1984 Celestial Software Inc. =
==========

CHECK GEOMETRY Version 2.0 07/01/90

1

BEAM PROPERTIES

Multiplier = 1 (For AISC database properties only)

Prop No	X-Section Area	Moment of Inertia Iy	/ Iz	Torsional Const.- J
1	1.500E+00	3.125E-02	1.125E+00	1.250E-01
2	9.000E+00	6.750E+00	6.750E+00	2.700E+01

Prop No	Max. Fiber Dist Cy	/ Cz	Shear Shape Fact SSFy	/ SSFz	Ctors	Shear Stress Factor SSTRFy	/ SSTRFz
1	2.50E-01	1.50E+00	1.20E+00	1.20E+00	1.00E+00	1.50E+00	1.50E+00
2	1.50E+00	1.50E+00	1.20E+00	1.20E+00	1.00E+00	1.50E+00	1.50E+00

BEAM CONNECTIVITY

Beam No	Nodes From/	To /	Ref	Prop No	Mat No	pincodes I / J	Rigid End Offset I	/ J	Length	Beam Type
1	1	2	0	1	1		0.00E+00	0.00E+00	0.33E+01	Beam
2	2	3	0	1	1		0.00E+00	0.00E+00	0.33E+01	Beam
3	3	4	0	1	1		0.00E+00	0.00E+00	0.33E+01	Beam
4	4	5	0	1	1		0.00E+00	0.00E+00	0.33E+01	Beam
5	5	6	0	1	1		0.00E+00	0.00E+00	0.33E+01	Beam
6	6	7	0	1	1		0.00E+00	0.00E+00	0.33E+01	Beam
7	7	8	0	1	1		0.00E+00	0.00E+00	0.33E+01	Beam
8	8	9	0	1	1		0.00E+00	0.00E+00	0.33E+01	Beam
9	9	10	0	1	1		0.00E+00	0.00E+00	0.33E+01	Beam
10	10	11	0	1	1		0.00E+00	0.00E+00	0.33E+01	Beam
11	11	12	0	1	1		0.00E+00	0.00E+00	0.33E+01	Beam
12	12	13	0	1	1		0.00E+00	0.00E+00	0.33E+01	Beam
13	13	14	0	1	1		0.00E+00	0.00E+00	0.33E+01	Beam
14	14	15	0	1	1		0.00E+00	0.00E+00	0.33E+01	Beam
15	15	16	0	1	1		0.00E+00	0.00E+00	0.33E+01	Beam
16	16	17	0	1	1		0.00E+00	0.00E+00	0.33E+01	Beam
17	17	18	0	1	1		0.00E+00	0.00E+00	0.33E+01	Beam
18	18	19	0	1	1		0.00E+00	0.00E+00	0.33E+01	Beam
19	19	20	0	1	1		0.00E+00	0.00E+00	0.33E+01	Beam
20	20	21	0	1	1		0.00E+00	0.00E+00	0.33E+01	Beam
21	21	22	0	1	1		0.00E+00	0.00E+00	0.33E+01	Beam
22	22	23	0	1	1		0.00E+00	0.00E+00	0.33E+01	Beam
23	23	24	0	1	1		0.00E+00	0.00E+00	0.33E+01	Beam
24	24	25	0	1	1		0.00E+00	0.00E+00	0.33E+01	Beam
25	25	1	0	1	1		0.00E+00	0.00E+00	0.33E+01	Beam

KAISER ENGINEERS HANFORD S/N:801854 02/13/95
PAGE 3 RUN ID=TA62753 15:06:39

========== I M A G E S 3 D ==========
= Copyright (c) 1984 Celestial Software Inc. =
==========

CHECK GEOMETRY Version 2.0 07/01/90

1

Beam No	Nodes From/	To /	Ref	Prop No	Mat No	pincodes I /	J	Rigid End Offset I /	J	Length	Beam Type
28	26	8	0	2	1	NA	NA	NA	NA	0.13E+02	Truss
29	26	9	0	2	1	NA	NA	NA	NA	0.13E+02	Truss
30	26	10	0	2	1	NA	NA	NA	NA	0.13E+02	Truss
31	26	11	0	2	1	NA	NA	NA	NA	0.13E+02	Truss
32	26	12	0	2	1	NA	NA	NA	NA	0.13E+02	Truss
33	26	13	0	2	1	NA	NA	NA	NA	0.13E+02	Truss
34	26	14	0	2	1	NA	NA	NA	NA	0.13E+02	Truss
35	26	15	0	2	1	NA	NA	NA	NA	0.13E+02	Truss
36	26	16	0	2	1	NA	NA	NA	NA	0.13E+02	Truss
37	26	17	0	2	1	NA	NA	NA	NA	0.13E+02	Truss
38	26	18	0	2	1	NA	NA	NA	NA	0.13E+02	Truss
39	26	19	0	2	1	NA	NA	NA	NA	0.13E+02	Truss

RESTRAINTS

Node No	Global/Local	Restraint Directions
2	GLOBAL	X Y Z RX RY RZ
3	GLOBAL	X Y Z RX RY RZ
24	GLOBAL	X Y Z RX RY RZ
25	GLOBAL	X Y Z RX RY RZ
26	GLOBAL	- Y - - - -

KAISER ENGINEERS HANFORD S/N:801854 02/13/95
PAGE 4 RUN ID=TA62753 15:06:39

========== I M A G E S 3 D ==========
= Copyright (c) 1984 Celestial Software Inc. =
==========

RENUMBER NODES Version 2.0 07/01/90

1

Node Renumbering Cross Reference List

Was	Is	Was	Is	Was	Is	Was	Is	Was	Is
1	26	2	25	3	23	4	21	5	19
6	17	7	15	8	13	9	11	10	8
11	7	12	6	13	5	14	4	15	3
16	2	17	1	18	9	19	12	20	14
21	16	22	18	23	20	24	22	25	24
26	10								

K-7-4PRINT

========== I M A G E S 3 D ==========
= Copyright (c) 1984 Celestial Software Inc. =
==========

ASSEMBLE STIFFNESS MATRIX Version 2.0 07/01/90

1

STIFFNESS ASSEMBLY SUMMARY

Number of Node Points.....	26
Number of Truss and Beam Elements.....	39
Number of Plate Elements.....	0
Number of Spring Elements.....	0
Number of Solid Elements.....	0
Number of Axisymmetric Elements.....	0
Number of Nodes with Restraints.....	5
Number of Equations to be Solved.....	128
Number of Blocks in the Matrix.....	1

B L O C K I N F O R M A T I O N

BLCK NO	SIZE (Byte)	BLCK NO	SIZE (Byte)	BLCK NO	SIZE (Byte)	BLCK NO	SIZE (Byte)
1	15312						

========== I M A G E S 3 D ==========
= Copyright (c) 1984 Celestial Software Inc. =
==========

ASSEMBLE STIFFNESS MATRIX Version 2.0 07/01/90

1

E Q U A T I O N N U M B E R L I S T

NODE WAS	NODE IS	TRANSLATION X	TRANSLATION Y	TRANSLATION Z	ROTATION X	ROTATION Y	ROTATION Z
1	26	123	124	125	126	127	128
2	25	0	0	0	0	0	0
3	23	0	0	0	0	0	0
4	21	117	118	119	120	121	122
5	19	105	106	107	108	109	110
6	17	93	94	95	96	97	98
7	15	81	82	83	84	85	86
8	13	69	70	71	72	73	74
9	11	57	58	59	60	61	62
10	8	43	44	45	46	47	48
11	7	37	38	39	40	41	42
12	6	31	32	33	34	35	36
13	5	25	26	27	28	29	30
14	4	19	20	21	22	23	24
15	3	13	14	15	16	17	18
16	2	7	8	9	10	11	12
17	1	1	2	3	4	5	6
18	9	49	50	51	52	53	54
19	12	63	64	65	66	67	68
20	14	75	76	77	78	79	80
21	16	87	88	89	90	91	92
22	18	99	100	101	102	103	104
23	20	111	112	113	114	115	116
24	22	0	0	0	0	0	0
25	24	0	0	0	0	0	0
26	10	55	0	56	0	0	0

STIFFNESS SUMMARY IN 1 BLOCKS

Minimum Diagonal Stiffness.....	.9999D+06
Eq No of Minimum Diagonal.....	123
Maximum Diagonal Stiffness.....	.1280D+09
Eq No of Maximum Diagonal.....	55

KC4-95JAN

KAISER ENGINEERS HANFORD S/N:801854 02/13/95
PAGE 7 Run ID=TA62753 15:07:14

========== I M A G E S 3 D ==========
= Copyright (c) 1984 Celestial Software Inc. =
==========

SOLVE DISPLACEMENTS Version 2.0 07/01/90

1

L O A D C A S E 1

GRAVITY LOADING

Direction	Gravity Factor	Load Factor
X	.0000E+00	.1000E+01
Y	.0000E+00	.1000E+01
Z	.0000E+00	.1000E+01

INERTIA LOADING

Direction	Translational Accel.	Rotational Accel.	Rotational Velocity	Origin
X	.0000E+00	.0000E+00	.0000E+00	.0000E+00
Y	.0000E+00	.0000E+00	.0000E+00	.0000E+00
Z	.0000E+00	.0000E+00	.0000E+00	.0000E+00

Gravity Acceleration = .3864E+03

CONCENTRATED LOADS

Node	Fx	Fy	Fz	Mx	My	Mz
26	.2774E+04	.0000E+00	.0000E+00	.0000E+00	.0000E+00	.0000E+00

REFERENCE TEMPERATURE = .0000E+00

KAISER ENGINEERS HANFORD S/N:801854 02/13/95
PAGE 8 Run ID=TA62753 15:07:15

========== I M A G E S 3 D ==========
= Copyright (c) 1984 Celestial Software Inc. =
==========

SOLVE DISPLACEMENTS Version 2.0 07/01/90

1

L O A D C A S E 1

APPLIED LOAD VECTOR

Node	Fx	Fy	Fz	Mx	My	Mz
26	.2774E+04	.0000E+00	.0000E+00	.0000E+00	.0000E+00	.0000E+00

1C-14-PRINT

========== I M A G E S 3 D ==========
= Copyright (c) 1984 Celestial Software Inc. =
==========

SOLVE DISPLACEMENTS Version 2.0 07/01/90

1

L O A D C A S E 1

DISPLACEMENTS

Node	Translations X	Translations Y	Translations Z	Rotations X	Rotations Y	Rotations Z
1	.0000E+00	.0000E+00	.0000E+00	.0000E+00	.0000E+00	.0000E+00
2	.0000E+00	.0000E+00	.0000E+00	.0000E+00	.0000E+00	.0000E+00
3	.0000E+00	.0000E+00	.0000E+00	.0000E+00	.0000E+00	.0000E+00
4	.9349E-02	.3012E-19	-.6676E-02	-.1056E-19	.5325E-02	.9611E-20
5	.1974E-01	.8335E-19	-.1907E-01	-.1437E-19	.3555E-02	.1619E-19
6	.2164E-01	.1281E-18	-.2284E-01	-.7240E-20	-.1140E-02	.3109E-20
7	.1983E-01	.1566E-18	-.1277E-01	-.8113E-20	-.4404E-02	.1018E-19
8	.2073E-01	.1870E-18	.3083E-04	-.8199E-20	-.1974E-02	.8176E-20
9	.2090E-01	.2457E-18	.2270E-03	-.3527E-20	.4339E-03	.2377E-19
10	.2102E-01	.3218E-18	.2207E-03	-.7792E-21	-.1376E-03	.2950E-19
11	.2116E-01	.3851E-18	.2096E-03	-.1986E-20	.4716E-05	.2983E-19
12	.2125E-01	.4262E-18	.1441E-03	-.2773E-20	-.1817E-04	.3087E-19
13	.2130E-01	.4427E-18	.5141E-04	-.3148E-20	-.2440E-05	.3225E-19
14	.2130E-01	.4323E-18	-.5146E-04	-.3153E-20	.2443E-05	.3371E-19
15	.2125E-01	.3944E-18	-.1442E-03	-.2884E-20	.1817E-04	.3506E-19
16	.2116E-01	.3302E-18	-.2096E-03	-.2152E-20	-.4713E-05	.3602E-19
17	.2102E-01	.2410E-18	-.2208E-03	-.3783E-20	.1376E-03	.3882E-19
18	.2090E-01	.1296E-18	-.2270E-03	-.6317E-21	-.4339E-03	.3493E-19
19	.2073E-01	.2895E-19	-.3087E-04	.3548E-20	.1974E-02	.2264E-19
20	.1983E-01	-.3987E-19	.1277E-01	.3429E-20	.4404E-02	.2063E-19
21	.2164E-01	-.8675E-19	.2284E-01	-.3249E-21	.1140E-02	.4531E-20
22	.1974E-01	-.7458E-19	.1907E-01	-.7628E-20	-.3555E-02	-.8478E-20
23	.9349E-02	-.3011E-19	.6676E-02	-.1048E-19	-.5325E-02	-.9705E-20
24	.0000E+00	.0000E+00	.0000E+00	.0000E+00	.0000E+00	.0000E+00
25	.0000E+00	.0000E+00	.0000E+00	.0000E+00	.0000E+00	.0000E+00
26	.2133E-01	.0000E+00	-.1276E-07	.0000E+00	.0000E+00	.0000E+00

========== I M A G E S 3 D ==========
= Copyright (c) 1984 Celestial Software Inc. =
==========

SOLVE BEAM LOADS/STRESSES Version 2.0 07/01/90

1

Load Case 1:

BEAM LOADS AND/OR STRESSES

GLoads Node LLoads Node Stress Node Stress Node	Fx Axial Axial Maximum	Fy Y-Shear Y-Shear Minimum	Fz Z-Shear Z-Shear Cmb. Shear	Mx Torsion Torsion	My Y-Bending Y-Bending	Mz Z-Bending Z-Bending
		BEAM NO. 1				
GLoads 1	.0000E+00	.0000E+00	.0000E+00	.0000E+00	.0000E+00	.0000E+00
GLoads 2	.0000E+00	.0000E+00	.0000E+00	.0000E+00	.0000E+00	.0000E+00
LLoads 1	.0000E+00	.0000E+00	.0000E+00	.0000E+00	.0000E+00	.0000E+00
LLoads 2	.0000E+00	.0000E+00	.0000E+00	.0000E+00	.0000E+00	.0000E+00
Stress 1	.0000E+00	.0000E+00	.0000E+00	.0000E+00	.0000E+00	.0000E+00
Stress 1	.0000E+00	.0000E+00	.0000E+00			
Stress 2	.0000E+00	.0000E+00	.0000E+00	.0000E+00	.0000E+00	.0000E+00
Stress 2	.0000E+00	.0000E+00	.0000E+00			
		BEAM NO. 2				
GLoads 2	.0000E+00	.0000E+00	.0000E+00	.0000E+00	.0000E+00	.0000E+00
GLoads 3	.0000E+00	.0000E+00	.0000E+00	.0000E+00	.0000E+00	.0000E+00
LLoads 2	.0000E+00	.0000E+00	.0000E+00	.0000E+00	.0000E+00	.0000E+00
LLoads 3	.0000E+00	.0000E+00	.0000E+00	.0000E+00	.0000E+00	.0000E+00
Stress 2	.0000E+00	.0000E+00	.0000E+00	.0000E+00	.0000E+00	.0000E+00
Stress 2	.0000E+00	.0000E+00	.0000E+00			
Stress 3	.0000E+00	.0000E+00	.0000E+00	.0000E+00	.0000E+00	.0000E+00
Stress 3	.0000E+00	.0000E+00	.0000E+00			
		BEAM NO. 3				
GLoads 3	-.1387E+04	-.8331E-17	-.5807E+03	-.7903E-17	-.2801E+04	-.8405E-15
GLoads 4	.1387E+04	.8331E-17	.5807E+03	.3018E-16	.2197E+03	.8243E-15
LLoads 3	-.1285E+04	.2125E-14	.7808E+03	-.6846E-15	-.2801E+04	.7164E-14
LLoads 4	.1285E+04	-.2125E-14	-.7808E+03	.6846E-15	.2197E+03	-.1402E-15
Stress 3	.8567E+03	.2125E-14	.7808E+03	.5477E-14	.2241E+05	-.9553E-14
Stress 3	.2326E+05	-.2155E+05	.1163E+05			
Stress 4	.8567E+03	.2125E-14	.7808E+03	.5477E-14	.1758E+04	-.1870E-15
Stress 4	.2614E+04	-.9011E+03	.1307E+04			
		BEAM NO. 4				
GLoads 4	-.1387E+04	-.8331E-17	-.5807E+03	-.3018E-16	-.2197E+03	-.8243E-15
GLoads 5	.1387E+04	.8331E-17	.5807E+03	.4774E-16	-.1224E+04	.8031E-15
LLoads 4	-.1439E+04	-.1897E-14	.4367E+03	-.5487E-15	-.2197E+03	-.1566E-14
LLoads 5	.1439E+04	.1897E-14	-.4367E+03	.5487E-15	-.1224E+04	-.4706E-14
Stress 4	.9592E+03	-.1897E-14	.4367E+03	.4389E-14	.1758E+04	.2089E-14
Stress 4	.2717E+04	-.7985E+03	.1358E+04			
Stress 5	.9592E+03	-.1897E-14	.4367E+03	.4389E-14	-.9790E+04	-.6274E-14
Stress 5	.1075E+05	-.8831E+04	.5375E+04			

K24.4PRINT

========== I M A G E S 3 D ==========
= Copyright (c) 1984 Celestial Software Inc. =
==========

SOLVE BEAM LOADS/STRESSES Version 2.0 07/01/90

1

Load Case 1:

GLoads Node LLoads Node Stress Node Stress Node		Fx Axial Axial Maximum	Fy Y-Shear Y-Shear Minimum	Fz Z-Shear Z-Shear Cmb. Shear	Mx Torsion Torsion	My Y-Bending Y-Bending	Mz Z-Bending Z-Bending
			BEAM NO. 5				
GLoads	5	-.1387E+04	-.8331E-17	-.5807E+03	-.4774E-16	.1224E+04	-.8031E-15
GLoads	6	.1387E+04	.8331E-17	.5807E+03	.5946E-16	-.1439E+04	.7782E-15
LLoads	5	-.1502E+04	.2049E-15	.6513E+02	-.3851E-15	.1224E+04	-.4713E-14
LLoads	6	.1502E+04	-.2049E-15	-.6513E+02	.3851E-15	-.1439E+04	.5391E-14
Stress	5	.1001E+04	.2049E-15	.6513E+02	.3081E-14	-.9790E+04	.6284E-14
Stress	5	.1079E+05	-.8789E+04	.5396E+04			
Stress	6	.1001E+04	.2049E-15	.6513E+02	.3081E-14	-.1151E+05	.7188E-14
Stress	6	.1251E+05	-.1051E+05	.6257E+04			
			BEAM NO. 6				
GLoads	6	-.1387E+04	-.8331E-17	-.5807E+03	-.5946E-16	.1439E+04	-.7782E-15
GLoads	7	.1387E+04	.8331E-17	.5807E+03	.6462E-16	-.4126E+03	.7511E-15
LLoads	6	-.1471E+04	.6801E-15	-.3105E+03	-.2042E-15	.1439E+04	.2437E-14
LLoads	7	.1471E+04	-.6801E-15	.3105E+03	.2042E-15	-.4126E+03	-.1891E-15
Stress	6	.9808E+03	.6801E-15	-.3105E+03	.1634E-14	-.1151E+05	-.3250E-14
Stress	6	.1249E+05	-.1053E+05	.6247E+04			
Stress	7	.9808E+03	.6801E-15	-.3105E+03	.1634E-14	-.3301E+04	-.2521E-15
Stress	7	.4282E+04	-.2320E+04	.2141E+04			
			BEAM NO. 7				
GLoads	7	-.1387E+04	-.8331E-17	-.5807E+03	-.6462E-16	.4126E+03	-.7511E-15
GLoads	8	.1387E+04	.8331E-17	.5807E+03	.6289E-16	.1791E+04	.7236E-15
LLoads	7	-.1348E+04	.5780E-15	-.6666E+03	-.1733E-16	.4126E+03	-.3908E-15
LLoads	8	.1348E+04	-.5780E-15	.6666E+03	.1733E-16	.1791E+04	.2302E-14
Stress	7	.8985E+03	.5780E-15	-.6666E+03	.1387E-15	-.3301E+04	.5210E-15
Stress	7	.4199E+04	-.2402E+04	.2100E+04			
Stress	8	.8985E+03	.5780E-15	-.6666E+03	.1387E-15	.1433E+05	.3069E-14
Stress	8	.1523E+05	-.1343E+05	.7614E+04			
			BEAM NO. 8				
GLoads	8	-.1075E+04	-.8331E-17	.1054E+04	-.6289E-16	-.1791E+04	-.7236E-15
GLoads	9	.1075E+04	.8331E-17	-.1054E+04	.5438E-16	-.4255E+03	.6974E-15
LLoads	8	-.1348E+04	.4634E-14	.6705E+03	.1638E-15	-.1791E+04	.1169E-13
LLoads	9	.1348E+04	-.4634E-14	-.6705E+03	-.1638E-15	-.4255E+03	.3625E-14
Stress	8	.8989E+03	.4634E-14	.6705E+03	-.1310E-14	.1433E+05	-.1559E-13
Stress	8	.1523E+05	-.1343E+05	.7614E+04			
Stress	9	.8989E+03	.4634E-14	.6705E+03	-.1310E-14	-.3404E+04	.4834E-14
Stress	9	.4302E+04	-.2505E+04	.2151E+04			
			BEAM NO. 9				
GLoads	9	-.1278E+04	-.8331E-17	.6225E+03	-.5438E-16	.4255E+03	-.6974E-15

========== I M A G E S 3 D ==========
= Copyright (c) 1984 Celestial Software Inc. =
==========

SOLVE BEAM LOADS/STRESSES Version 2.0 07/01/90

1

Load Case 1:

GLoads Node LLoads Node Stress Node Stress Node		Fx Axial Axial Maximum	Fy Y-Shear Y-Shear Minimum	Fz Z-Shear Z-Shear Cmb. Shear	Mx Torsion Torsion	My Y-Bending Y-Bending	Mz Z-Bending Z-Bending
GLoads	10	.1278E+04	.8331E-17	-.6225E+03	.3963E-16	.1013E+03	.6742E-15
LLoads	9	-.1413E+04	.1785E-14	-.1593E+03	.3278E-15	.4255E+03	.4170E-14
LLoads	10	.1413E+04	-.1785E-14	.1593E+03	-.3278E-15	.1013E+03	.1730E-14
Stress	9	.9419E+03	.1785E-14	-.1593E+03	-.2622E-14	-.3404E+04	-.5560E-14
Stress	9	.4346E+04	-.2462E+04	.2173E+04			
Stress	10	.9419E+03	.1785E-14	-.1593E+03	-.2622E-14	.8101E+03	.2307E-14
Stress	10	.1752E+04	.1318E+03	.8760E+03			
			BEAM NO. 10				
GLoads	10	-.9297E+03	-.8331E-17	.1044E+04	-.3963E-16	-.1013E+03	-.6742E-15
GLoads	11	.9297E+03	.8331E-17	-.1044E+04	.1955E-16	-.2052E+02	.6553E-15
LLoads	10	-.1397E+04	-.1953E-15	.3684E+02	.4643E-15	-.1013E+03	-.1004E-14
LLoads	11	.1397E+04	.1953E-15	-.3684E+02	-.4643E-15	-.2052E+02	.3587E-15
Stress	10	.9316E+03	-.1953E-15	.3684E+02	-.3715E-14	.8101E+03	.1339E-14
Stress	10	.1742E+04	.1215E+03	.8709E+03			
Stress	11	.9316E+03	-.1953E-15	.3684E+02	-.3715E-14	-.1642E+03	.4783E-15
Stress	11	.1096E+04	.7674E+03	.5479E+03			
			BEAM NO. 11				
GLoads	11	-.6824E+03	-.8331E-17	.1224E+04	-.1955E-16	.2052E+02	-.6553E-15
GLoads	12	.6824E+03	.8331E-17	-.1224E+04	-.4581E-17	.7538E+01	.6421E-15
LLoads	11	-.1401E+04	-.9152E-16	-.8488E+01	.5648E-15	.2052E+02	-.5340E-15
LLoads	12	.1401E+04	.9152E-16	.8488E+01	-.5648E-15	.7538E+01	.2314E-15
Stress	11	.9340E+03	-.9152E-16	-.8488E+01	-.4519E-14	-.1642E+03	.7119E-15
Stress	11	.1098E+04	.7698E+03	.5491E+03			
Stress	12	.9340E+03	-.9152E-16	-.8488E+01	-.4519E-14	.6031E+02	.3086E-15
Stress	12	.9943E+03	.8737E+03	.4971E+03			
			BEAM NO. 12				
GLoads	12	-.3464E+03	-.8331E-17	.1357E+04	.4581E-17	-.7538E+01	-.6421E-15
GLoads	13	.3464E+03	.8331E-17	-.1357E+04	-.3125E-16	.1385E+01	.6352E-15
LLoads	12	-.1400E+04	-.1258E-16	.1861E+01	.6230E-15	-.7538E+01	-.1724E-15
LLoads	13	.1400E+04	.1258E-16	-.1861E+01	-.6230E-15	.1385E+01	.1309E-15
Stress	12	.9334E+03	-.1258E-16	.1861E+01	-.4984E-14	.6031E+02	.2299E-15
Stress	12	.9937E+03	.8731E+03	.4969E+03			
Stress	13	.9334E+03	-.1258E-16	.1861E+01	-.4984E-14	.1108E+02	.1745E-15
Stress	13	.9445E+03	.9223E+03	.4723E+03			
			BEAM NO. 13				
GLoads	13	-.1665E-05	-.8331E-17	.1400E+04	.3125E-16	-.1385E+01	-.6352E-15
GLoads	14	.1665E-05	.8331E-17	-.1400E+04	-.5879E-16	.1385E+01	.6352E-15
LLoads	13	-.1400E+04	-.8331E-17	-.1665E-05	.6352E-15	-.1385E+01	.3125E-16

```
KAISER ENGINEERS HANFORD  S/N:801854                                  02/13/95
PAGE   13                      Run ID=TA62753                         15:07:17
              =============== I M A G E S  3 D ===============
              = Copyright (c) 1984   Celestial Software Inc. =
              ================================================

           SOLVE BEAM LOADS/STRESSES    Version 2.0  07/01/90

      1

Load Case  1:

GLoads Node     Fx          Fy          Fz          Mx          My          Mz
LLoads Node    Axial      Y-Shear     Z-Shear     Torsion    Y-Bending   Z-Bending
Stress Node    Axial      Y-Shear     Z-Shear     Torsion    Y-Bending   Z-Bending
Stress Node   Maximum     Minimum   Cmb. Shear
------ ---- ---------- ---------- ---------- ---------- ---------- ----------
LLoads   14  .1400E+04  .8331E-17  .1665E-05 -.6352E-15  .1385E+01 -.5879E-16
Stress   13  .9336E+03 -.8331E-17 -.1665E-05 -.5082E-14  .1108E+02 -.4167E-16
Stress   13  .9447E+03  .9225E+03  .4723E+03
Stress   14  .9336E+03 -.8331E-17 -.1665E-05 -.5082E-14  .1108E+02 -.7839E-16
Stress   14  .9447E+03  .9225E+03  .4723E+03
                          ***BEAM  NO.   14***
GLoads   14  .3464E+03 -.8331E-17  .1357E+04  .5879E-16 -.1385E+01 -.6352E-15
GLoads   15 -.3464E+03  .8331E-17 -.1357E+04 -.8547E-16  .7538E+01  .6421E-15
LLoads   14 -.1400E+04 -.1792E-17 -.1861E+01  .6006E-15 -.1385E+01  .2100E-15
LLoads   15  .1400E+04  .1792E-17  .1861E+01 -.6006E-15  .7538E+01 -.2160E-15
Stress   14  .9334E+03 -.1792E-17 -.1861E+01 -.4805E-14  .1108E+02 -.2801E-15
Stress   14  .9445E+03  .9223E+03  .4723E+03
Stress   15  .9334E+03 -.1792E-17 -.1861E+01 -.4805E-14  .6031E+02 -.2880E-15
Stress   15  .9937E+03  .8731E+03  .4969E+03
                          ***BEAM  NO.   15***
GLoads   15  .6824E+03 -.8331E-17  .1224E+04  .8547E-16 -.7538E+01 -.6421E-15
GLoads   16 -.6824E+03  .8331E-17 -.1224E+04 -.1096E-15 -.2052E+02  .6553E-15
LLoads   15 -.1401E+04 -.9152E-16  .8488E+01  .5215E-15 -.7538E+01  .3103E-15
LLoads   16  .1401E+04  .9152E-16 -.8488E+01 -.5215E-15 -.2052E+02 -.6129E-15
Stress   15  .9340E+03 -.9152E-16  .8488E+01 -.4172E-14  .6031E+02 -.4138E-15
Stress   15  .9943E+03  .8737E+03  .4971E+03
Stress   16  .9340E+03 -.9152E-16  .8488E+01 -.4172E-14 -.1642E+03 -.8172E-15
Stress   16  .1098E+04  .7698E+03  .5491E+03
                          ***BEAM  NO.   16***
GLoads   16  .9297E+03 -.8331E-17  .1044E+04  .1096E-15  .2052E+02 -.6553E-15
GLoads   17 -.9297E+03  .8331E-17 -.1044E+04 -.1297E-15  .1013E+03  .6742E-15
LLoads   16 -.1397E+04  .8041E-15 -.3684E+02  .4027E-15  .2052E+02  .9810E-15
LLoads   17  .1397E+04 -.8041E-15  .3684E+02 -.4027E-15  .1013E+03  .1677E-14
Stress   16  .9316E+03  .8041E-15 -.3684E+02 -.3221E-14 -.1642E+03 -.1308E-14
Stress   16  .1096E+04  .7674E+03  .5479E+03
Stress   17  .9316E+03  .8041E-15 -.3684E+02 -.3221E-14  .8101E+03  .2236E-14
Stress   17  .1742E+04  .1215E+03  .8709E+03
                          ***BEAM  NO.   17***
GLoads   17  .1278E+04 -.8331E-17  .6225E+03  .1297E-15 -.1013E+03 -.6742E-15
GLoads   18 -.1278E+04  .8331E-17 -.6225E+03 -.1444E-15 -.4255E+03  .6974E-15
LLoads   17 -.1413E+04 -.1453E-14  .1593E+03  .2518E-15 -.1013E+03 -.2792E-15
LLoads   18  .1413E+04  .1453E-14 -.1593E+03 -.2518E-15 -.4255E+03 -.4523E-14
Stress   17  .9419E+03 -.1453E-14  .1593E+03 -.2014E-14  .8101E+03  .3722E-15
Stress   17  .1752E+04  .1318E+03  .8760E+03
```

```
KAISER ENGINEERS HANFORD  S/N:801854                                  02/13/95
PAGE   14                      Run ID=TA62753                         15:07:17
              =============== I M A G E S  3 D ===============
              = Copyright (c) 1984   Celestial Software Inc. =
              ================================================

           SOLVE BEAM LOADS/STRESSES    Version 2.0  07/01/90

      1

Load Case  1:

GLoads Node     Fx          Fy          Fz          Mx          My          Mz
LLoads Node    Axial      Y-Shear     Z-Shear     Torsion    Y-Bending   Z-Bending
Stress Node    Axial      Y-Shear     Z-Shear     Torsion    Y-Bending   Z-Bending
Stress Node   Maximum     Minimum   Cmb. Shear
------ ---- ---------- ---------- ---------- ---------- ---------- ----------
Stress   18  .9419E+03 -.1453E-14  .1593E+03 -.2014E-14 -.3404E+04 -.6030E-14
Stress   18  .4346E+04 -.2462E+04  .2173E+04
                          ***BEAM  NO.   18***
GLoads   18  .1075E+04 -.8331E-17  .1054E+04  .1444E-15  .4255E+03 -.6974E-15
GLoads   19 -.1075E+04  .8331E-17 -.1054E+04 -.1529E-15  .1791E+04  .7236E-15
LLoads   18 -.1348E+04 -.3745E-14 -.6705E+03  .7815E-16  .4255E+03 -.1663E-14
LLoads   19  .1348E+04  .3745E-14  .6705E+03 -.7815E-16  .1791E+04 -.1072E-13
Stress   18  .8989E+03 -.3745E-14 -.6705E+03 -.6252E-15 -.3404E+04  .2217E-14
Stress   18  .4302E+04 -.2505E+04  .2151E+04
Stress   19  .8989E+03 -.3745E-14 -.6705E+03 -.6252E-15  .1433E+05 -.1429E-13
Stress   19  .1523E+05 -.1343E+05  .7614E+04
                          ***BEAM  NO.   19***
GLoads   19  .1387E+04 -.8331E-17 -.5807E+03  .1529E-15 -.1791E+04 -.7236E-15
GLoads   20 -.1387E+04  .8331E-17  .5807E+03 -.1547E-15 -.4126E+03  .7511E-15
LLoads   19 -.1348E+04  .5780E-15  .6666E+03 -.1072E-15 -.1791E+04  .2307E-14
LLoads   20  .1348E+04 -.5780E-15 -.6666E+03  .1072E-15 -.4126E+03 -.3964E-15
Stress   19  .8985E+03  .5780E-15  .6666E+03  .8576E-15  .1433E+05 -.3076E-14
Stress   19  .1523E+05 -.1343E+05  .7614E+04
Stress   20  .8985E+03  .5780E-15  .6666E+03  .8576E-15 -.3301E+04 -.5286E-15
Stress   20  .4199E+04 -.2402E+04  .2100E+04
                          ***BEAM  NO.   20***
GLoads   20  .1387E+04 -.8331E-17 -.5807E+03  .1547E-15  .4126E+03 -.7511E-15
GLoads   21 -.1387E+04  .8331E-17  .5807E+03 -.1495E-15 -.1439E+04  .7782E-15
LLoads   20 -.1471E+04 -.1631E-14  .3105E+03 -.2927E-15  .4126E+03  .2865E-14
LLoads   21  .1471E+04  .1631E-14 -.3105E+03  .2927E-15 -.1439E+04 -.8257E-14
Stress   20  .9808E+03 -.1631E-14  .3105E+03  .2341E-14 -.3301E+04 -.3820E-14
Stress   20  .4282E+04 -.2320E+04  .2141E+04
Stress   21  .9808E+03 -.1631E-14  .3105E+03  .2341E-14 -.1151E+05 -.1101E-13
Stress   21  .1249E+05 -.1053E+05  .6247E+04
                          ***BEAM  NO.   21***
GLoads   21  .1387E+04 -.8331E-17 -.5807E+03  .1495E-15  .1439E+04 -.7782E-15
GLoads   22 -.1387E+04  .8331E-17  .5807E+03 -.1378E-15 -.1224E+04  .8031E-15
LLoads   21 -.1502E+04  .2049E-15 -.6513E+02 -.4666E-15  .1439E+04  .5352E-14
LLoads   22  .1502E+04 -.2049E-15  .6513E+02  .4666E-15 -.1224E+04 -.4675E-14
Stress   21  .1001E+04  .2049E-15 -.6513E+02  .3733E-14 -.1151E+05 -.7136E-14
Stress   21  .1251E+05 -.1051E+05  .6257E+04
Stress   22  .1001E+04  .2049E-15 -.6513E+02  .3733E-14 -.9790E+04 -.6233E-14
Stress   22  .1079E+05 -.8789E+04  .5396E+04
```


1CF4-PRINT

========== I M A G E S 3 D ==========
= Copyright (c) 1984 Celestial Software Inc. =
==========

SOLVE BEAM LOADS/STRESSES Version 2.0 07/01/90

1

Load Case 1:

GLoads Node LLoads Node Stress Node Stress Node		Fx Axial Axial Maximum	Fy Y-Shear Y-Shear Minimum	Fz Z-Shear Z-Shear Cmb. Shear	Mx Torsion Torsion	My Y-Bending Y-Bending	Mz Z-Bending Z-Bending
			BEAM NO. 22				
GLoads	22	.1387E+04	-.8331E-17	-.5807E+03	.1378E-15	.1224E+04	-.8031E-15
GLoads	23	-.1387E+04	.8331E-17	.5807E+03	-.1202E-15	.2197E+03	.8243E-15
LLoads	22	-.1439E+04	.7066E-15	-.4367E+03	-.6181E-15	.1224E+04	.2534E-14
LLoads	23	.1439E+04	-.7066E-15	.4367E+03	.6181E-15	.2197E+03	-.1988E-15
Stress	22	.9592E+03	.7066E-15	-.4367E+03	.4944E-14	-.9790E+04	-.3379E-14
Stress	22	.1075E+05	-.8831E+04	.5375E+04			
Stress	23	.9592E+03	.7066E-15	-.4367E+03	.4944E-14	.1758E+04	-.2650E-15
Stress	23	.2717E+04	-.7985E+03	.1358E+04			
			BEAM NO. 23				
GLoads	23	.1387E+04	-.8331E-17	-.5807E+03	.1202E-15	-.2197E+03	-.8243E-15
GLoads	24	-.1387E+04	.8331E-17	.5807E+03	-.9795E-16	.2801E+04	.8405E-15
LLoads	23	-.1285E+04	.2125E-14	-.7808E+03	-.7375E-15	-.2197E+03	-.2131E-15
LLoads	24	.1285E+04	-.2125E-14	.7808E+03	.7375E-15	.2801E+04	.7237E-14
Stress	23	.8567E+03	.2125E-14	-.7808E+03	.5900E-14	.1758E+04	.2841E-15
Stress	23	.2614E+04	-.9010E+03	.1307E+04			
Stress	24	.8567E+03	.2125E-14	-.7808E+03	.5900E-14	.2241E+05	.9650E-14
Stress	24	.2326E+05	-.2155E+05	.1163E+05			
			BEAM NO. 24				
GLoads	24	.0000E+00	.0000E+00	.0000E+00	.0000E+00	.0000E+00	.0000E+00
GLoads	25	.0000E+00	.0000E+00	.0000E+00	.0000E+00	.0000E+00	.0000E+00
LLoads	24	.0000E+00	.0000E+00	.0000E+00	.0000E+00	.0000E+00	.0000E+00
LLoads	25	.0000E+00	.0000E+00	.0000E+00	.0000E+00	.0000E+00	.0000E+00
Stress	24	.0000E+00	.0000E+00	.0000E+00	.0000E+00	.0000E+00	.0000E+00
Stress	24	.0000E+00	.0000E+00	.0000E+00			
Stress	25	.0000E+00	.0000E+00	.0000E+00	.0000E+00	.0000E+00	.0000E+00
Stress	25	.0000E+00	.0000E+00	.0000E+00			
			BEAM NO. 25				
GLoads	25	.0000E+00	.0000E+00	.0000E+00	.0000E+00	.0000E+00	.0000E+00
GLoads	1	.0000E+00	.0000E+00	.0000E+00	.0000E+00	.0000E+00	.0000E+00
LLoads	25	.0000E+00	.0000E+00	.0000E+00	.0000E+00	.0000E+00	.0000E+00
LLoads	1	.0000E+00	.0000E+00	.0000E+00	.0000E+00	.0000E+00	.0000E+00
Stress	25	.0000E+00	.0000E+00	.0000E+00	.0000E+00	.0000E+00	.0000E+00
Stress	25	.0000E+00	.0000E+00	.0000E+00			
Stress	1	.0000E+00	.0000E+00	.0000E+00	.0000E+00	.0000E+00	.0000E+00
Stress	1	.0000E+00	.0000E+00	.0000E+00			
			TRUSS NO. 28				
GLoads	26	.3119E+03	.0000E+00	.1635E+04	.0000E+00	.0000E+00	.0000E+00

========== I M A G E S 3 D ==========
= Copyright (c) 1984 Celestial Software Inc. =
==========

SOLVE BEAM LOADS/STRESSES Version 2.0 07/01/90

1

Load Case 1:

GLoads Node LLoads Node Stress Node Stress Node		Fx Axial Axial Maximum	Fy Y-Shear Y-Shear Minimum	Fz Z-Shear Z-Shear Cmb. Shear	Mx Torsion Torsion	My Y-Bending Y-Bending	Mz Z-Bending Z-Bending
GLoads	8	-.3119E+03	.0000E+00	-.1635E+04	.0000E+00	.0000E+00	.0000E+00
LLoads	26	.1665E+04	-.6416E-29	.5974E-12	.0000E+00	.0000E+00	.0000E+00
LLoads	8	-.1665E+04	.6416E-29	-.5974E-12	.0000E+00	.0000E+00	.0000E+00
Stress	26	-.1849E+03	-.1069E-29	.9956E-13	.0000E+00	.0000E+00	.0000E+00
Stress	26	-.1849E+03	-.1849E+03	.9247E+02			
Stress	8	-.1849E+03	-.1069E-29	.9956E-13	.0000E+00	.0000E+00	.0000E+00
Stress	8	-.1849E+03	-.1849E+03	.9247E+02			
			TRUSS NO. 29				
GLoads	26	-.2032E+03	.0000E+00	-.4318E+03	.0000E+00	.0000E+00	.0000E+00
GLoads	9	.2032E+03	.0000E+00	.4318E+03	.0000E+00	.0000E+00	.0000E+00
LLoads	26	-.4773E+03	.1921E-28	.7491E-12	.0000E+00	.0000E+00	.0000E+00
LLoads	9	.4773E+03	-.1921E-28	-.7491E-12	.0000E+00	.0000E+00	.0000E+00
Stress	26	.5303E+02	.3202E-29	.1249E-12	.0000E+00	.0000E+00	.0000E+00
Stress	26	.5303E+02	.5303E+02	.2651E+02			
Stress	9	.5303E+02	.3202E-29	.1249E-12	.0000E+00	.0000E+00	.0000E+00
Stress	9	.5303E+02	.5303E+02	.2651E+02			
			TRUSS NO. 30				
GLoads	26	.3486E+03	.0000E+00	.4214E+03	.0000E+00	.0000E+00	.0000E+00
GLoads	10	-.3486E+03	.0000E+00	-.4214E+03	.0000E+00	.0000E+00	.0000E+00
LLoads	26	.5469E+03	.5041E-27	.8084E-11	.0000E+00	.0000E+00	.0000E+00
LLoads	10	-.5469E+03	-.5041E-27	-.8084E-11	.0000E+00	.0000E+00	.0000E+00
Stress	26	-.6076E+02	.8402E-28	.1347E-11	.0000E+00	.0000E+00	.0000E+00
Stress	26	-.6076E+02	-.6076E+02	.3038E+02			
Stress	10	-.6076E+02	.8402E-28	.1347E-11	.0000E+00	.0000E+00	.0000E+00
Stress	10	-.6076E+02	-.6076E+02	.3038E+02			
			TRUSS NO. 31				
GLoads	26	.2474E+03	.0000E+00	.1797E+03	.0000E+00	.0000E+00	.0000E+00
GLoads	11	-.2474E+03	.0000E+00	-.1797E+03	.0000E+00	.0000E+00	.0000E+00
LLoads	26	.3058E+03	-.4321E-28	-.1899E-11	.0000E+00	.0000E+00	.0000E+00
LLoads	11	-.3058E+03	.4321E-28	.1899E-11	.0000E+00	.0000E+00	.0000E+00
Stress	26	-.3397E+02	-.7202E-29	-.3166E-12	.0000E+00	.0000E+00	.0000E+00
Stress	26	-.3397E+02	-.3397E+02	.1699E+02			
Stress	11	-.3397E+02	-.7202E-29	-.3166E-12	.0000E+00	.0000E+00	.0000E+00
Stress	11	-.3397E+02	-.3397E+02	.1699E+02			
			TRUSS NO. 32				
GLoads	26	.3360E+03	.0000E+00	.1330E+03	.0000E+00	.0000E+00	.0000E+00
GLoads	12	-.3360E+03	.0000E+00	-.1330E+03	.0000E+00	.0000E+00	.0000E+00
LLoads	26	.3613E+03	.3994E-28	.6639E-11	.0000E+00	.0000E+00	.0000E+00

========== I M A G E S 3 D ==========
= Copyright (c) 1984 Celestial Software Inc. =
==========

SOLVE BEAM LOADS/STRESSES Version 2.0 07/01/90

1

Load Case 1:

GLoads Node LLoads Node Stress Node Stress Node	Fx Axial Axial Maximum	Fy Y-Shear Y-Shear Minimum	Fz Z-Shear Z-Shear Cmb. Shear	Mx Torsion Torsion	My Y-Bending Y-Bending	Mz Z-Bending Z-Bending
LLoads 12	-.3613E+03	-.3994E-28	-.6639E-11	.0000E+00	.0000E+00	.0000E+00
Stress 26	-.4015E+02	.6657E-29	.1107E-11	.0000E+00	.0000E+00	.0000E+00
Stress 26	-.4015E+02	-.4015E+02	.2007E+02			
Stress 12	-.4015E+02	.6657E-29	.1107E-11	.0000E+00	.0000E+00	.0000E+00
Stress 12	-.4015E+02	-.4015E+02	.2007E+02			
TRUSS NO. 33						
GLoads 26	.3464E+03	.0000E+00	.4376E+02	.0000E+00	.0000E+00	.0000E+00
GLoads 13	-.3464E+03	.0000E+00	-.4376E+02	.0000E+00	.0000E+00	.0000E+00
LLoads 26	.3491E+03	-.1415E-27	.6236E-11	.0000E+00	.0000E+00	.0000E+00
LLoads 13	-.3491E+03	.1415E-27	-.6236E-11	.0000E+00	.0000E+00	.0000E+00
Stress 26	-.3879E+02	-.2358E-28	.1039E-11	.0000E+00	.0000E+00	.0000E+00
Stress 26	-.3879E+02	-.3879E+02	.1940E+02			
Stress 13	-.3879E+02	-.2358E-28	.1039E-11	.0000E+00	.0000E+00	.0000E+00
Stress 13	-.3879E+02	-.3879E+02	.1940E+02			
TRUSS NO. 34						
GLoads 26	.3464E+03	.0000E+00	-.4376E+02	.0000E+00	.0000E+00	.0000E+00
GLoads 14	-.3464E+03	.0000E+00	.4376E+02	.0000E+00	.0000E+00	.0000E+00
LLoads 26	.3491E+03	.4832E-30	.7870E-13	.0000E+00	.0000E+00	.0000E+00
LLoads 14	-.3491E+03	-.4832E-30	-.7870E-13	.0000E+00	.0000E+00	.0000E+00
Stress 26	-.3879E+02	.8054E-31	.1312E-13	.0000E+00	.0000E+00	.0000E+00
Stress 26	-.3879E+02	-.3879E+02	.1940E+02			
Stress 14	-.3879E+02	.8054E-31	.1312E-13	.0000E+00	.0000E+00	.0000E+00
Stress 14	-.3879E+02	-.3879E+02	.1940E+02			
TRUSS NO. 35						
GLoads 26	.3360E+03	.0000E+00	-.1330E+03	.0000E+00	.0000E+00	.0000E+00
GLoads 15	-.3360E+03	.0000E+00	.1330E+03	.0000E+00	.0000E+00	.0000E+00
LLoads 26	.3613E+03	-.5202E-28	-.1619E-11	.0000E+00	.0000E+00	.0000E+00
LLoads 15	-.3613E+03	.5202E-28	.1619E-11	.0000E+00	.0000E+00	.0000E+00
Stress 26	-.4015E+02	-.8669E-29	-.2698E-12	.0000E+00	.0000E+00	.0000E+00
Stress 26	-.4015E+02	-.4015E+02	.2007E+02			
Stress 15	-.4015E+02	-.8669E-29	-.2698E-12	.0000E+00	.0000E+00	.0000E+00
Stress 15	-.4015E+02	-.4015E+02	.2007E+02			
TRUSS NO. 36						
GLoads 26	.2474E+03	.0000E+00	-.1797E+03	.0000E+00	.0000E+00	.0000E+00
GLoads 16	-.2474E+03	.0000E+00	.1797E+03	.0000E+00	.0000E+00	.0000E+00
LLoads 26	.3058E+03	.7326E-28	.6189E-11	.0000E+00	.0000E+00	.0000E+00
LLoads 16	-.3058E+03	-.7326E-28	-.6189E-11	.0000E+00	.0000E+00	.0000E+00
Stress 26	-.3397E+02	.1221E-28	.1031E-11	.0000E+00	.0000E+00	.0000E+00
Stress 26	-.3397E+02	-.3397E+02	.1699E+02			

========== I M A G E S 3 D ==========
= Copyright (c) 1984 Celestial Software Inc. =
==========

SOLVE BEAM LOADS/STRESSES Version 2.0 07/01/90

1

Load Case 1:

GLoads Node LLoads Node Stress Node Stress Node	Fx Axial Axial Maximum	Fy Y-Shear Y-Shear Minimum	Fz Z-Shear Z-Shear Cmb. Shear	Mx Torsion Torsion	My Y-Bending Y-Bending	Mz Z-Bending Z-Bending
Stress 16	-.3397E+02	.1221E-28	.1031E-11	.0000E+00	.0000E+00	.0000E+00
Stress 16	-.3397E+02	-.3397E+02	.1699E+02			
TRUSS NO. 37						
GLoads 26	.3486E+03	.0000E+00	-.4214E+03	.0000E+00	.0000E+00	.0000E+00
GLoads 17	-.3486E+03	.0000E+00	.4214E+03	.0000E+00	.0000E+00	.0000E+00
LLoads 26	.5469E+03	-.6802E-27	.1088E-10	.0000E+00	.0000E+00	.0000E+00
LLoads 17	-.5469E+03	.6802E-27	-.1088E-10	.0000E+00	.0000E+00	.0000E+00
Stress 26	-.6076E+02	-.1134E-27	.1813E-11	.0000E+00	.0000E+00	.0000E+00
Stress 26	-.6076E+02	-.6076E+02	.3038E+02			
Stress 17	-.6076E+02	-.1134E-27	.1813E-11	.0000E+00	.0000E+00	.0000E+00
Stress 17	-.6076E+02	-.6076E+02	.3038E+02			
TRUSS NO. 38						
GLoads 26	-.2032E+03	.0000E+00	.4318E+03	.0000E+00	.0000E+00	.0000E+00
GLoads 18	.2032E+03	.0000E+00	-.4318E+03	.0000E+00	.0000E+00	.0000E+00
LLoads 26	-.4773E+03	.1030E-28	.3045E-12	.0000E+00	.0000E+00	.0000E+00
LLoads 18	.4773E+03	-.1030E-28	-.3045E-12	.0000E+00	.0000E+00	.0000E+00
Stress 26	.5303E+02	.1717E-29	.5076E-13	.0000E+00	.0000E+00	.0000E+00
Stress 26	.5303E+02	.5303E+02	.2651E+02			
Stress 18	.5303E+02	.1717E-29	.5076E-13	.0000E+00	.0000E+00	.0000E+00
Stress 18	.5303E+02	.5303E+02	.2651E+02			
TRUSS NO. 39						
GLoads 26	.3119E+03	.0000E+00	-.1635E+04	.0000E+00	.0000E+00	.0000E+00
GLoads 19	-.3119E+03	.0000E+00	.1635E+04	.0000E+00	.0000E+00	.0000E+00
LLoads 26	.1665E+04	.2450E-28	.2150E-11	.0000E+00	.0000E+00	.0000E+00
LLoads 19	-.1665E+04	-.2450E-28	-.2150E-11	.0000E+00	.0000E+00	.0000E+00
Stress 26	-.1849E+03	.4083E-29	.3583E-12	.0000E+00	.0000E+00	.0000E+00
Stress 26	-.1849E+03	-.1849E+03	.9247E+02			
Stress 19	-.1849E+03	.4083E-29	.3583E-12	.0000E+00	.0000E+00	.0000E+00
Stress 19	-.1849E+03	-.1849E+03	.9247E+02			

KAISER ENGINEERS HANFORD S/N:801854 02/13/95
PAGE 19 Run ID=TA62753 15:07:18

========== I M A G E S 3 D ==========
= Copyright (c) 1984 Celestial Software Inc. =
==========

SOLVE BEAM LOADS/STRESSES Version 2.0 07/01/90

1

Load Case 1:

MAXIMUM STRESS SUMMARY FOR BEAMS/TRUSSES
WITHIN SPECIFIED RANGE 1- 39

Maximum (absolute) Stress = .2326E+05 at BEAM 3

Beam	Axial	Y-Shear	Z-Shear	Torsion	Y-Bending	Z-Bending
3	.8567E+03	.2125E-14	.7808E+03	.5477E-14	.2241E+05	-.9553E-14
	Maximum	Minimum	Cmb. Shear			
	.2326E+05	-.2155E+05	.1163E+05			

KAISER ENGINEERS HANFORD S/N:801854 02/13/95
PAGE 20 Run ID=TA62753 15:07:18

========== I M A G E S 3 D ==========
= Copyright (c) 1984 Celestial Software Inc. =
==========

SOLVE REACTIONS Version 2.0 07/01/90

1

Load Case 1:

REACTIONS

Node	Fx	Fy	Fz	Mx	My	Mz
2	.0000E+00	.0000E+00	.0000E+00	.0000E+00	.0000E+00	.0000E+00
3	-.1387E+04	-.8331E-17	-.5807E+03	-.7903E-17	-.2801E+04	-.8405E-15
24	-.1387E+04	.8331E-17	.5807E+03	-.9795E-16	.2801E+04	.8405E-15
25	.0000E+00	.0000E+00	.0000E+00	.0000E+00	.0000E+00	.0000E+00
26	.0000E+00	.0000E+00	.0000E+00	.0000E+00	.0000E+00	.0000E+00

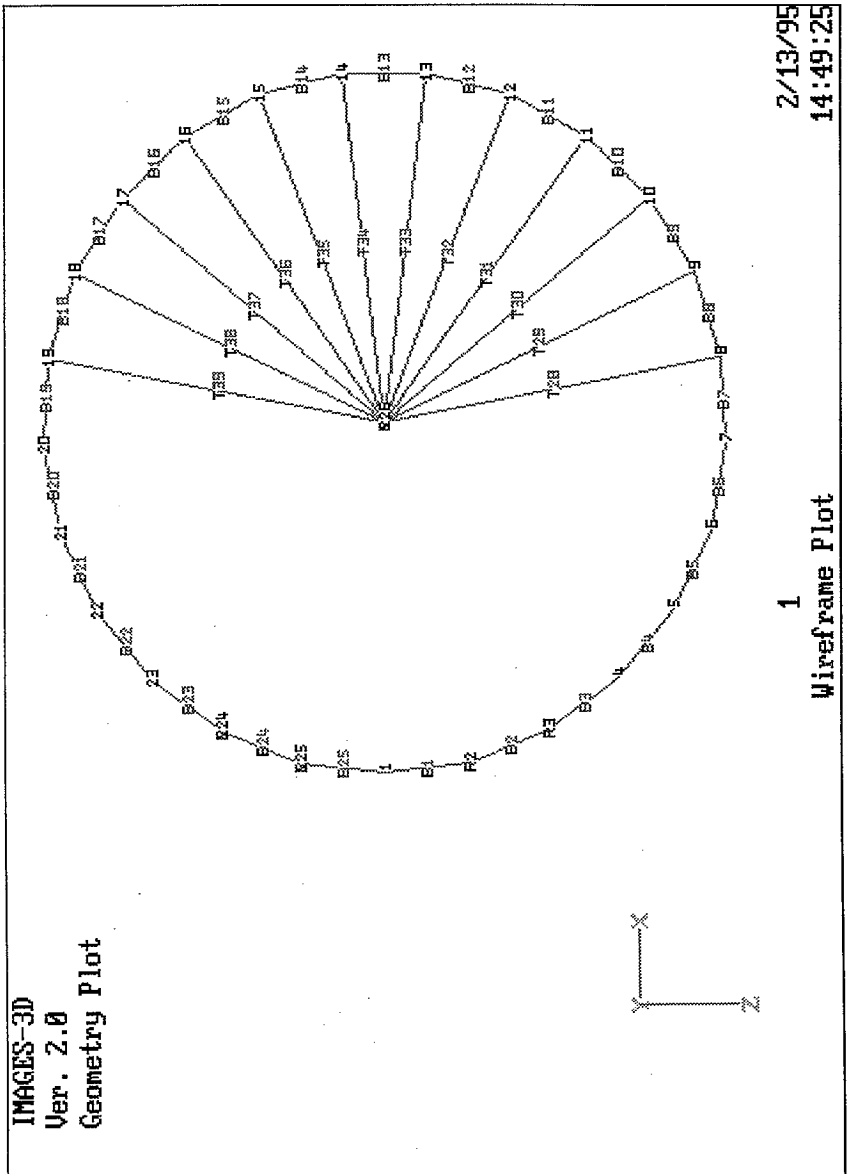
IMAGES-3D
Ver. 2.0
Geometry Plot
1
Wireframe Plot
2/13/95
14:49:25

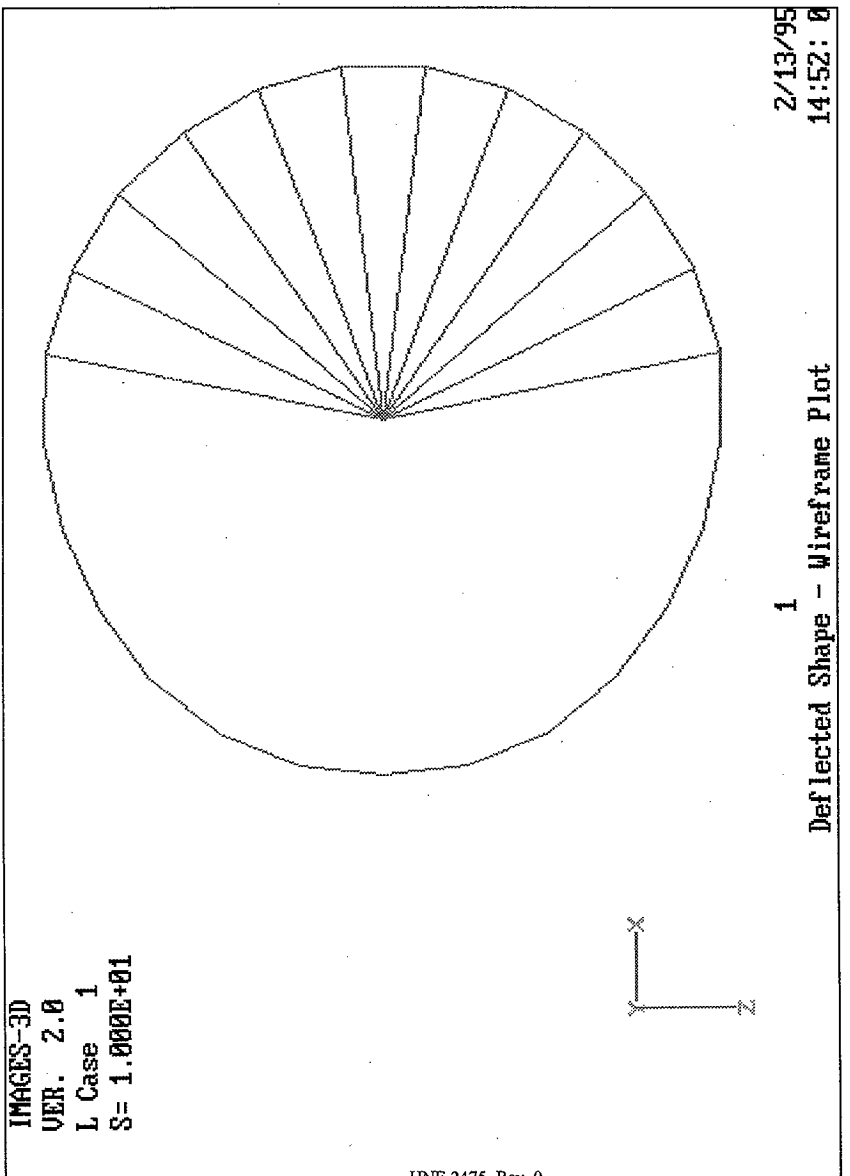
IMAGES-3D
VER. 2.0
L Case 1
S= 1.000E+01
1
Deflected Shape - Wireframe Plot
2/13/95
14:52: 0
X
Y
Z

APPENDIX B

TABLE 11

ALLOWABLE ANCHOR VALUES FOR
CARBON STEEL HILTI KWIK-BOLT II

Concrete Minimum Strength 3000 psi

The following tabulated data also apply to these specific sites:
Bld. 236-Z of Z-Plant, Tank Farms 241-SX-115.

Bolt Diameter (INCHES)	WTM (INCHES) (Note 1)	Embedment Depth (INCHES) (Min./Standard) (Note 3)	Maximum Allowable Load (KIP/BOLT) (Note 2)	Installation Torque (FT-LBS) (Min-Max)
1/4	1/2	1 1/8	T=0.31 V=0.32	4-7
		2	T=0.55 V=0.32	5-8
3/8	3/4	1 5/8	T=0.61 V=0.78	20-25
		2 1/2	T=1.21 V=0.88	22-28
1/2	3/4	2 1/4	T=1.23 V=1.47	30-45
		3 1/2	T=2.00 V=1.47	45-60
5/8	3/4	2 3/4	T=1.75 V=2.53	75-90
		4	T=2.67 V=2.75	95-115
3/4	3/4	3 1/4	T=2.17 V=3.41	150-175
		4 3/4	T=3.87 V=3.71	225-240
1	3/4	4 1/2	T=3.80 V=6.27	200-350
		6	T=5.81 V=7.59	350-450

General Note: For bolt length, use as a minimum that which will satisfy the required embedment depth and "T".

1) T = maximum thread length above nut after torquing, minimum length equals two threads above nut.

2) The design shall not consider anchor pretension;

$$\frac{V \text{ applied}}{V} + \frac{T \text{ applied}}{T} \leq 1.0$$

3) Minimum embedment = Absolute minimum embedment depth allowed

DISTRIBUTION SHEET

To	From	Page 1 of 1
Distribution	JW Bailey	Date 23 July 1998
Project Title/Work Order		EDT No. 622233
Project W-320 Tank 106-C, HNF-2475, Piping Calculations, Vol. 5		ECN No. n/a

Name	MSIN	Text With All Attach.	Text Only	Attach./ Appendix Only	EDT/ECN Only
JW Bailey	S2-48				
W-320 Project Files	R1-29				