Sta #4 (15)
JUL 26 1998

ENGINEERING DATA TRANSMITTAL

1. EDT 622225

2. To: (Receiving Organization) Distribution	3. From: (Originating Organization) TWRS Projects/SST Retrieval	4. Related EDT No.: n/a
5. Proj./Prog./Dept./Div.: W-320 TWRS/TCPN # ~~D2MA1~~ D2991	6. Design Authority/ Design Agent/Cog. Engr.: JW Bailey, NHC	7. Purchase Order No.: n/a
8. Originator Remarks: For approval and release of a new supporting document. This document has been generated to ensure retrievability of the Project W-320 "Civil/Structural Calculations, Vol. 7".		9. Equip./Component No.: n/a
		10. System/Bldg./Facility: 241-C-106
11. Receiver Remarks: 11A. Design Baseline Document? [X] Yes [] No		12. Major Assm. Dwg. No.: n/a
		13. Permit/Permit Application No.: n/a
		14. Required Response Date:

15. DATA TRANSMITTED

(A) Item No.	(B) Document/Drawing No.	(C) Sheet No.	(D) Rev. No.	(E) Title or Description of Data Transmitted	(F) Approval Designator	(G) Reason for Transmittal	(H) Originator Disposition	(I) Receiver Disposition
1	HNF-2467	-	0	Project W-320, 241-C-106 Sluicing, Civil/Structural Calculations, Vol. 7	NA			-

16. KEY

Approval Designator (F)	Reason for Transmittal (G)		Disposition (H) & (I)	
E, S, Q, D or N/A (see WHC-CM-3-5, Sec.12.7)	1. Approval 2. Release 3. Information	4. Review 5. Post-Review 6. Dist. (Receipt Acknow. Required)	1. Approved 2. Approved w/comment 3. Disapproved w/comment	4. Reviewed no/comment 5. Reviewed w/comment 6. Receipt acknowledged

17. SIGNATURE/DISTRIBUTION
(See Approval Designator for required signatures)

(G) Reason	(H) Disp.	(J) Name	(K) Signature	(L) Date	(M) MSIN	(G) Reason	(H) Disp.	(J) Name	(K) Signature	(L) Date	(M) MSIN
2	1	Design Authority	JW Bailey	7/20/98	S2-48						
		Design Agent	MC Davenport	7/19/98							
2	1	Cog.Eng.	~~CE Graves~~ MC Davenport		S2-48						
2	1	Cog. Mgr.	JW Bailey	7/20/98	S2-48						
		QA									
		Safety									
		Env.									

18. MC Davenport ~~CE Graves~~ ~~3/24/98~~ 7/19/98 Signature of EDT Originator Date	19. Authorized Representative for Receiving Organization Date	20. JW Bailey ~~3/27/98~~ 7/20/98 J.W. Bailey Design Authority/ Cognizant Manager Date	21. DOE APPROVAL (if required) Ctrl. No. [] Approved [] Approved w/comments [] Disapproved w/comments

BD-7400-172-2 (05/96) GEF097

Project W-320, 241-C-106 Sluicing Civil/Structural Calculations, Vol. 7

John W. Bailey
Numatec Hanford Co., Richland, WA 99352
U.S. Department of Energy Contract DE-AC09-96RL13200

EDT/ECN: 622225 UC: 506
Org Code: 8C452 Charge Code: D2991/HANA0600
B&R Code: EW3130010 Total Pages: 269

Key Words: W-320, Sluicing, Tank 241-C-106, Tank 241-AY-102, WRSS, calculations, civil/structural.

Abstract: This supporting document has been prepared to make the FDNW calculations for Project W-320, readily retrievable.

TRADEMARK DISCLAIMER. Reference herein to any specific commercial product, process, or service by trade name, trademark, manufacturer, or otherwise, does not necessarily constitute or imply its endorsement, recommendation, or favoring by the United States Government or any agency thereof or its contractors or subcontractors.

Printed in the United States of America. To obtain copies of this document, contact: Document Control Services, P.O. Box 950, Mailstop H6-08, Richland WA 99352, Phone (509) 372-2420; Fax (509) 376-4989.

JUL 26 1998
DATE:
STA: #4
HANFORD RELEASE
ID:
15

Release Approval Date

Release Stamp

Approved for Public Release

Project W-320, 241-C-106 Sluicing Civil/Structural Calculations, Vol. 7

TABLE OF CONTENTS

Calc. No.	Title	Page
W320-24-019	Prefiltration/Recirculation Skid, Structural Design (Process Control Building)	A-i
W320-24-020	Intake Air Filter Pad and Cooling Coil Support Frame Analysis	B-i
W320-24-021	Misc. Mechanical (HVAC) Equipment Foundation - Exhaust Air Cleanup Train Skid	C-i
W320-24-022	Service Building Foundation	D-i
W320-24-023	Misc. Mechanical (HVAC) Equipment Foundation - Chiller and Pumps	E-i
W320-24-024	Electrical Equipment Pad (241-C-51)	F-i

W320-24-019

Prefiltration/Recirculation Skid,
Structural Design (Process Control Building)

INTEROFFICE MEMORANDUM

TO R. W. Davidson

DATE February 24, 1995

FROM G. L. Hopkins GLH

COPIES TO M. R. Custer
D. L. Evans
M. S. Ruben

JOB NO. W-320

SUBJECT INDEPENDENT SEISMIC REVIEW - PROJECT W-320, TANK 241-C-106, PREFILTRATION/RECIRCULATION SKID

Input design documents:

(1) FDC WHC-SD-W320-FDC-001, Rev 2, For Tank 241-C-1-106, Waste Retrieval, Project W-320.

(2) LOI 9360642, Rev 2 - Project W-320, Tank 241-C-106, Sluicing Letter of Instruction, Removal of In-Tank Equipment - Definitive Design, Procurement, Fabrication, Training, and Testing.

(3) LOI KGS-94-013, 3/1 Analysis Requirements for Project W-320 Equipment Removal System.

(4) SDC-4.1 Rev 12, Design Loads for Facilities

(5) WHC-SD-WM-SEL-033 Rev 1 - Safety Classifications, Project W-320

Output design documents:

(1) Calc. No. W320-24-019 - Prefiltration/Recirculation Skid

(2) Drawings H-2-18455, Sht 1-5

A review of the noted output design documents for compliance with the input design documents was completed on February 24, 1995 relative to the seismic design requirements. The output design documents were correct and no changes have to be made as a result of the review.

GLH:lbw

KAISER ENGINEERS
HANFORD

	CALCULATION IDENTIFICATION AND INDEX	Page i of iii Date 05/16/94

This sheet shows the status and description of the attached Design Analysis sheets.

Discipline Civil WO/Job No. W-320/ER4319 Calculation No. W320-24-019

Project No. & Name PROJECT W-320, TANK 241-C-106

Calculation Item Prefiltration/Recirculation Skid, Structural Design (Process Control Bldg)

These calculations apply to:

Dwg. No. H-2-818455 Sht. 1, 2, 3, 4, & 5 Rev. No. 0, 0, 0, 0, 0

Dwg. No. Rev. No.

Other (Study, CDR) Rev. No.

The status of these calculations is:

[ ] Preliminary Calculations

[X] Final Calculations

[ ] Check Calculations (On Calculation Dated)

[ ] Void Calculation (Reason Voided)

Incorporated in Final Drawings? [X] Yes [ ] No

This calculation verified by independent "check" calculations? [ ] Yes [X] No

Original and Revised Calculation Approvals:

	Rev. 0 Signature/Date	Rev. 1 Signature/Date	Rev. 2 Signature/Date
Originator	Michael R Custer 2/17/95	Michael R Custer 6/28/96	
Checked by	George J. Lyon 2/17/95	[signature] 7/17/94	
Approved by	R W Davidson 2/28/95	[signature] 7/17/94	
Checked Against Approved Vendor Data		Ann S Langevin 4/7/98	

REV 1: REPLACED PAGES 2, 3, 4 & 27.

INDEX

Design Analysis Page No.	Description
i	Calculation Identification and Index
ii	Calculation Cross Index
iii	Design Verification Screening Criteria
1,2	OBJECTIVES; CRITERIA; DATA; ASSUMPTIONS; METHODS; REFERENCES; CALCULATIONS; CONCLUSIONS
3-36	DESIGN CALCULATIONS
APPENDIX A	DRAWING H-2-818455 SHTS. 1, 2, 3, 4 and 5
APPENDIX B	STATIC ANALYSIS - "IMAGES" COMPUTER PROGRAM: SHIELD PLATE/ SUPPORTS (Run ID=MN61973)

CALCULATION CROSS INDEX (Typical)

Subject Calculation No. W320-24-019, REV.0

Subject Calculation Revision No.	Superceded by Calculation No.	These interfacing calculation/documents provide input to the subject calculation, and if revised may require revision of the subject calculation.		Results and conclusions of the subject calculation are used in these interfacing calculations and/or documents.		Does the output interface calculation/ documents require revision?		Has the output interface calculation/ documents been revised?		Discipline manager's signature and date indicating evaluation complete.
		Calculation/Document No.	Revision No.	Calculation/Document No.	Revision No.	Yes	No	Yes	No	
0	N/A	N/A		H-2-818455 SHT. 1	0	✓			✓	[illegible] 2/28/95
				H-2-818455 SHT. 2	0		✓		✓	
				H-2-818455 SHT. 3	0		✓		✓	
				H-2-818455 SHT. 4	0		✓		✓	
				H-2-818455 SHT. 5	0		✓		✓	

DESIGN VERIFICATION SCREENING CRITERIA

Project/Document No. W-320/CALCULATION W320-24-019, REV. 0

When the design or design change affects hardware, formal design verification must be performed if one or more of the following questions must be answered affirmatively (YES).

YES	NO		
	✓	1.	Does the design or design change involved meet the established criteria to be considered Safety Class 1 or 2?
	✓	2.	Does this design or design change cause or permit changes to Safety Class 1 or 2 instrument or alarm setpoints outside of previously approved operational limits?
	✓	3.	Does this design or design change significantly affect the nuclear safety consequences of a malfunction or failure of the structure, system, or component?
	✓	4.	Does this design or design change involve or change design that has previously undergone formal design verification?

R W Davidson — Assigned Lead Engineer — 2/28/95 Date

R W Davidson — Responsible Discipline Manager — 2/28/95 Date

Original Design Package Distribution:
- Project Engineer
- Chief Design Engineer
- Engineering Document Control

Design Change Distribution:
- Attach to Engineering Change Notice

KEH-1981.00 (02/90)

KAISER ENGINEERS HANFORD

Calc. No. W320-24-019
Revision 0
Page No. 1 of 36

DESIGN ANALYSIS

Client WHC
WO/Job No. W-320/ER-4319
Subject Prefiltration/Recirculation Skid Structural Design (Process Control Bldg.)
Date 05/16/94 By M.R Custer MRC
Checked 02/17/95 By G.J Zyn GJZ
Location TANK 241-C-106
Revised By

OBJECTIVE:

The objective of this calculation is to provide the detailed, structural design of the Prefiltration/ Recirculation skid, including a radiation shield and details for anchorage to a reinforced concrete foundation.

CRITERIA:

1. DOE ORDER 6430.1A (04/06/89)
2. HANFORD PLANT STANDARDS, STANDARD ARCH./CIVIL DESIGN CRITERIA, SDC-4.1, REV.11
3. FUNCTIONAL DESIGN CRITERIA, WHC-SD-W320-FDC-001, REV.2
4. LETTERS OF INSTRUCTION:

DATA:

1. Equipment supported on the skid is Safety Class 3 per Reference 6, therefore the skid is Safety Class 3.

ASSUMPTIONS:

1. None

METHODS:

Hand calculations and "IMAGES 3D" (version 2.0), computer program

REFERENCES:

1. AISC Manual of Steel Construction, Nineth Edition
2. Uniform Building Code (UBC), 1991 Edition
3. American Welding Society (AWS), Standard D1.1, Structural Welding Code
4. ASTM A 36-91
5. HANFORD PLANT STANDARDS, STANDARD ARCH./ CIVIL DESIGN CRITERIA, SDC-4.1, REV. 11.
6. WHC-SD-WM-SEL-033, REV.0-C, Interim Safety Equipment List for 241-C-106 WASTE RETRIEVAL
7. DESIGN OF WELDED STRUCTURES, BLODGETT (Eighth Edition)
8. ASCE 7-93, MINIMUM DESIGN LOADS FOR BUILDINGS AND OTHER STRUCTURES

Calc. No. W320-24-019
Revision 1
Page No. 2 of 36

DESIGN ANALYSIS

Client WHC
Subject Prefiltration/Recirculation Skid, Structural Design (Process Control Bldg.)
Location TANK 241-C-106

WO/Job No. W-320/ER-4319
Date 06/21/96 By M.R Custer MRC
Checked 7/17/96 By
Revised By

CALCULATIONS:

REFER TO DESIGN CALCULATIONS SECTION

CONCLUSIONS:

The structural skid supporting the Process Building and equipment is designed based on the criteria, codes and standards, referenced in the calculation. The final members and the associated elements satisfy the design requirements of the structure. Refer to drawing H-2-818455 shts. 1, 2, 3, 4 and 5 for design drawing information.

REVISION 1:

CONCLUSION:

Revision 1 incorporates vendor data for the weight of the individual equipment/ components. The updated information does not affect the original conclusion of the calculation, since the overall effect is a reduction in the total weight of the equipment and a nominal relocation of the center of gravity for the skid assembly.

Revision 1 also provides an assessment of the current calculation to determine potential impact due to changes, as documented in the following ECNs. No changes to the calculation is required based on the following:

1) ECN W-320-161: Provides location and anchorage details for equipment numbers HME-1361 and HMF-1361 for attachment to the Process Skid. The reactions from these equipment were considered in the original design and the bolting details, as provided exceeds the required capacity indicated on the vendor drawings.

2) ECN W-320-174: The ECN resolves conflicting detail/section numbering and provides minor dimensional changes. These changes do not impact the original design in the calculation. Detail 20 and Section T were added by this ECN to provide support for electrical/ instrumentation equipment. The support detail for the electrical equipment is based on the detail for the lifting lugs on the skid assembly. Since the capacity of the lifting lugs greatly exceeds the loads applied by the electrical equipment, the original calculation adequately addresses the design of the equipment supports.

3) ECN W-320-351: The ECN removes the existing 1" diameter anchor bolts and replaces them with a 3/16" fillet weld, 2" long at each existing embed plate location. The combined shear and tension which exists at the equipment anchorage is distributed to the embedded plates. The maximum resultant force due to combined shear and tension on the weld is:

$$R = [(2.5)^2 + (2.85)^2]^{1/2} = 3.79 \text{ kips}$$

The ~~total shear~~ capacity of each weld is: (.707) (3/16")(21 ksi)(2) = 5.57 kips > 3.79 kips....OK.

Calc. No. W320-24-019
Revision 1
Page No. 3 of 36

DESIGN ANALYSIS

Client WHC
Subject Prefiltration/Recirculation Skid, Structural Design (Process Building)

WO/Job No. W-320/ER4319
Date 06/28/96 By M.R Custer MRC
Checked 7/17/96 By

Location TANK 241-C-106 Revised By

DESIGN CALCULATIONS:

The design and analysis of the skid, consists of developing conservative weight estimates for the major equipment, design of the skid support system to integrate the equipment as a module, design of a 1" plate, shielding wall, evaluate the equipment anchorage to the skid and design of the skid anchorage system to a reinforced concrete foundation. The equipment module will be constructed outside the C-Farm area, transported and placed on a concrete foundation at the project site. A prefabricated metal building enclosure will be assembled outside the C-farm area and placed on the foundation, following the skid installation. All the equipment supported on the skid is Safety Class 3 per Reference 6, therefore the design of the skid is Safety Class 3.

DESIGN LOADS:

DEAD LOADS

- Mechanical equipment, piping/supports and instrumentation cabinet, tubing and supports:

- Recirculation Fan,	642 lbs
- Heat Exchanger,	2740 lbs (Wt dry = 1976 lbs)
- Heating Coil,	180 lbs
- Air Receiver Tank,	150 lbs
- (1) Metal Filter, 1430 lbs + 3360 lb	4790 lbs
- Piping and pipe supports,	1300 lbs
- (1) Instrumentation cabinets/ tubing/ supports	1657 lbs (Installed after transport)
- HEME, Mist Eliminator,	21920 (Wt dry = 21540 lbs)
- Moisture Separator,	264 lbs

Total Equipment Weight(dry) = **30,842 lbs or 30.8 Kips**

Total Equipment Weight(wet) = **33,643 lbs or 33.6 Kips**

- Room shielding plate (1 " thick):

Wt. of plate = 11 ft. x 21.28 ft. x 40.8 lbs/sq.ft. = 9551 lbs or **9.60 Kips**

- Estimated weight of structural steel on skid:

Wt.skid = (21.0 ft x 2 x 40 lb/ft) + (11.0 ft x 6 x 40 lb/ft) + (23.6 x 40 lb/ft) + (4.83 ft x 40 lb/ft) + (2.41 ft x 20 lb/ft) + 2 (4.25 ft. x 20 lb/ft) + 2 (3.5 ft x 40 lb/ft) + 2 (1.67 x 40 lb/ft) =

Wt.skid = 6089 lbs, say **6.1 Kips**

Calc. No. W320-24-019
Revision 1
Page No. 4 of 36

DESIGN ANALYSIS

Client WHC
Subject Prefiltration/Recirculation Skid, Structural Design (Process Building)
WO/Job No. W-320/ER4319
Date 06/28/96
By M.R Custer MRC
Checked 7/17/96
By
Location TANK 241-C-106
Revised
By

- Estimated weight TS shield frame:

Wt Frame = (11.0 ft - 4"/ 12) [5(12.21) + (19.02)] + [1.67 * 2 + 3.42

+ 7.75 + 7.58 + $(11^2 + 4.67^2)^{1/2}$ + $(11^2 + 3.42^2)^{1/2}$ + $(3.21^2$

+ $7.75^2)^{1/2}$ + $(7.75^2 + 7.79^2)^{1/2}$](12.21) = 1646 lbs = **1.7 Kips**

- Estimated weight of 1/2 " skid cover plate:

Wt. 1/2" cover plate = 21.0 ft x 11.7 ft x 20.4 lbs/ft^2 = 5012 lbs or **5.0 Kips**

TOTAL DEAD LOADS (dry) = **30.8** + 9.6 + 6.1 + 1.7 + 5.0 = **53.2 Kips (Transport Weight)**
NOTE: Actual as-built transport weight = 55 kip, (See ECN W-320-351)
TOTAL DEAD LOADS (max) = **33.6** + 9.6 + 6.1 + 1.7 + 5.0 = **56.0 Kips (Design Weight)**

LIVE LOADS:

- Live Load, LL = 0

- Equipment Live Load, LL_e = Equip. Live Load x 1.5

LL_e = 213 lb x 1.5/ 13.5 = 23.7 lbs force on bolt (where Torque is 213 lbs-in)

Equipment live load is negligible

EARTHQUAKE LOADS:

- Lateral Seismic Force (Equipment Skid), $F_p = ZIC_p W_p$, where:

Z = 0.20 (Zone 2B) (Reference 2)
I = 1.25 (Reference 5)
C_p = .75 x 2 = 1.5 (Reference 2)
F_p = (0.20)(1.25)(1.5) W_p = 0.375 W_p

$E_{n-s} = V_{n-s}$ (100% max.) (Reference 2)
$E_{e-w} = V_{e-w}$ (30% max.) (Reference 2)

$E_{n-s} = V_{n-s}$ = 0.375 W_p skid = 0.375 (61.3) = **23.0 Kips**
$E_{e-w} = V_{n-s}$ = 0.375 W_p skid (0.3) = 0.375 (61.3)(0.3)= **6.9 Kips**

$E_{(SRSS)}$ = [$23.0^2 + 6.9^2]^{1/2}$ = **24.0 Kips** (Apply force in direction providing maximum load condition)
OR E = 0.375 (1.3) Wp = 0.488 (61.3) = 29.9 Kips (conservative)

Use E_{MAX} = 30.0 Kips (conservative)

KAISER ENGINEERS HANFORD

Calc. No. W320-24-019
Revision 0
Page No. 5 of 36

DESIGN ANALYSIS

Client WHC
WO/Job No. W-320/ER4319
Subject Prefiltration/Recirculation Skid, Structural Design (Process Building)
Date 05/17/94 By M.R Custer MRC
Checked 02/17/95 By G.J Zyn GJZ
Location TANK 241-C-106
Revised By

• Distribution of Seismic forces by Component:

Total weight of skid and components = **61.3 Kips**
Total lateral seismic load = **30.0 Kips**

LOAD IDENTIFIER	VERTICAL COMP.	/ RATIO		HORIZ. COMPONENT
a) Recirculation Fan,	(350)	(30000)/61300	=	171 lbs
b) Heat Exchanger, Wet	(5000)	(30000)/61300	=	2447 lbs
Dry	(1200)		=	586
c) Heating Coil,	(150)	(30000)/61300	=	73 lbs
d) Air Receiver Tank,	(150)	(30000)/61300	=	73 lbs
e) HEME (Mist Eliminator), Wet	(30000)	(30000)/61300	=	14682 lbs
Dry	(27000)			13176
f) Metal Filter,	(1135)	(30000)/61300	=	553 lbs
g) Moisture Separator	(400)	(30000)/61300	=	195 lbs
h) Piping and supports,	(1000)	(30000)/61300	=	487 lbs
i) Instrumentation cabinet,	(700)	(30000)/61300	=	341 lbs
j) 1 " Shield Plate,	(9551)	(30000)/61300	=	4674 lbs
k) Weight of Skid,	(6089)	(30000)/61300	=	2965 lbs
l) Weight of 1/2" cover Pl	(5000)	(30000)/61300	=	2435 lbs
m) Weight of TS Frame	(1646)	(30000)/61300	=	802 lbs
TOTAL WEIGHT =	61171 lbs/ 61.3 Kips			29898 lbs/ 30.0 Kips
TOTAL WEIGHT =	54371 LBS/ 54.4 Kips			

WIND LOAD: (Maximum affects in the North-South direction) (Reference 8)

F (due to wind loading) = $q_z\ G_z\ C_f\ A_f$

where: $q_z = 0.00256\ K_z\ (IV)^2 = 0.00256\ (0.80)\ (1.02 \times 70)^2 = 10.4$ psf

$G_z = 1.32$
$C_f = 1.2$

$F = 10.4\ (1.32)\ (1.2)\ (11\ ft)^2 = 1.99$ Kips < 30.0 Kips (seismic load governs)

Note: Equipment exposed to wind loading only during the rigging operation. The equipment is to be housed in a building enclosure therefore, there is no wind loading during normal operations.

KAISER ENGINEERS HANFORD

Calc. No. W320-24-019
Revision 0
Page No. 6 of 36

DESIGN ANALYSIS

Client WHC
WO/Job No. W-320/ER4319
Subject Prefiltration/Recirculation Skid, Structural Design (Process Building)
Date 05/17/94 By M.R Custer MRC
Checked 02/17/95 By G.J Zyn GJZ
Location TANK 241-C-106
Revised By

LOCATE THE CENTER OF GRAVITY OF THE SKID ASSEMBLY:

COMPONENT WEIGHTS AND LOCATIONS:

Component Description	Weight (lbs)	X-distance, (ft.)	Z-Distance, (ft.)	H-Distance (ft.)
a) Recirculation Fan (FN-1361)	350	0.92	9.25	2.76
b) Heat Exchanger (HX-1361)	1200 Dry 5000 Wet	4.17	6.70	2.71
c) Heating Coil (HC-1361)	150	4.08	0.75	2.76
d) Air Receiver Tank (TK-1361)	150	7.75	9.50	2.25
e) HEME (Mist Eliminator) (HME-1361)	27000 Dry 30000 Wet	10.75	5.25	6.45
f) Metal Filter (HMF-1361)	1135	14.09	4.75	3.29
g) Moisture Separator	400	7.25	4.47	4.42
h) Piping/supports	1000	10.20	3.18	3.50
i) Instrumentation/ cabinet/supports	700	18.34	3.79	3.50
j) 1" Shield Plate	9874	13.39	6.22	6.04
k) Skid Frame	6089	10.41	5.42	0.00
l) 1/2" Cover Plate	5000	10.17	5.50	0.52
m) TS support frame	1646	12.38	6.17	7.16

Reference points for the x, z, and h distances are as follows:
1) x-distance, dimension from centerline of W12x40 at the west end of the skid to the center of the component.
2) z-distance, dimension from centerline of W12x40 at the south end of the skid to the center of the component.
3) h-distance, dimension from centerline of W12x40 skid to centerline of component.

KAISER ENGINEERS HANFORD

Calc. No. W320-24-019
Revision 0
Page No. 7 of 36

DESIGN ANALYSIS

Client WHC
Subject Prefiltration/Recirculation Skid, Structural Design (Process Building)

WO/Job No. W-320/ER4319
Date 05/17/94 By M.R Custer MRC
Checked 02/17/95 By G.J Zyn GJZ

Location TANK 241-C-106
Revised By

CENTER OF GRAVITY OF THE SKID FRAME: (Reference Figure 1)

- Component weights:

  - (2) Primary framing beams, (W12 X 40):

    (21.00 ft)(40) = 840 lbs each — **Total = 1680 lbs**

  - (6) Secondary framing beams (W12 x 40):

    (11.0 ft)(40) = 440 lbs each — **Total = 2640 lbs**

  - (4) Diagonal beams (W12 x 40): — **Total = 944 lbs**

    a) 251 lbs

    b) 234 lbs

    c) 239 lbs

    d) 220 lbs

  - (1) Moisture Separator beam, (W12 x 40):

    4.83 ft x 40 lb/ft — Total = 193 lbs

  - (1) Moisture Separator support beam, (W12 x 16):

    2.41 ft x 20 lb/ft — Total = 48 lbs

  - (2) Metal Filter support beams, (W12 x 16):

    4.25 ft x 20 lb/ft = 85 lbs/each — Total = 170 lbs

  - (2) HEME support beams (W12 x 40),

    3.5 ft x 40 = 140 lbs/ each — Total = 280 lbs

  - (2) Shield wall support beams (W12 x 40)
    1.1 ft x 40 lb/ft = 44 lbs/ each — Total = 88 lbs

KAISER ENGINEERS HANFORD

Calc. No. W320-24-019
Revision 0
Page No. 8 of 36

DESIGN ANALYSIS

Client WHC
WO/Job No. W-320/ER4319
Subject Prefiltration/Recirculation Skid, Structural Design (Process Building)
Date 05/17/94 By M.R Custer MRC
Checked 02/17/95 By G.J Zyn
Location TANK 241-C-106
Revised By

- Center Gravity, East-West direction

EPx = [440 lbs (4.17 ft) + 440 lbs (9.00 ft) + 440 lbs (12.50 ft)

+ 440 lbs (16.75 ft) + 440 lbs (20.33 ft) + 251 lbs (6.58 ft)

+ 234 lbs (14.63 ft) + 239 lbs (6.58 ft) + 220 lbs (14.63 ft)

+ 140 lbs (10.75 ft)(2) + 840 lbs (10.17 ft)(2) + 85 lbs (14.63 ft)(2)

+ 193 lbs (6.58 ft) + 48 lbs (7.25 ft) + 44 lbs (16.75 ft + 9.00 ft]/ 6089 lbs

x = 10.32 ft, approx. 1 3/4" east of the centerline of the skid

- Center of Gravity, North-South direction

EPz = [440 lbs (5.50 ft) (6) + 251 lbs (9.00 ft) + 234 lbs (9.00 ft)

+ 239 lbs (1.75 ft) + 220 lbs (1.75 ft) + 140 lbs (3.50 ft)

+ 140 lbs (7.00 ft) + 840 lbs (11.00 ft) + 85 lbs (5.50 ft) + 85 lbs (4.08 ft)

+ 193 lbs (4.5 ft) + 48 lbs (3.36 ft) + 44 lbs (11.92 ft - 0.58 ft)]/ 6089 lbs =

z = 5.38 ft, approx. 1 1/2 " south of the centerline of the skid

CENTER OF GRAVITY OF THE SHIELD PLATE: (Reference Figures 3, 4 & 5)

- Component Weights:

  - Shield Plate 1, Wt = 40.8 lbs/ft^2 (11 ft)(8.79 ft) = 3946 lbs
  - Shield Plate 2, Wt = 40.8 lbs/ft^2 (11 ft)(7.83 ft) = 3514 lbs
  - Shield Plate 3, Wt = 40.8 lbs/ft^2 (11 ft)(4.66 ft) = 2091 lbs

  TOTAL = 9551 lbs

- Center of Gravity, East-West

  x = 3946 lbs (16.54 ft) + 3514 lbs (12.67 ft) + 2091 lbs (8.79 ft)/ 9551 lbs =
  x = 13.42 ft

- Center of Gravity, North-South

  z = 3946 lbs (3.50 ft) + 3514 lbs (7.59 ft) + 2091 lbs (9.94 ft)/ 9551 lbs =
  z = 6.42 ft

- Center of Gravity, Height

  h = 11.0 ft/ 2 + (12"/ 2 + 0.50")/12
  h = 6.04 ft

KAISER ENGINEERS HANFORD

Calc. No. W320-24-019
Revision 0
Page No. 9 of 36

DESIGN ANALYSIS

Client WHC
WO/Job No. W-320/ER4319
Subject Prefiltration/Recirculation Skid, Structural Design (Process Building)
Date 05/17/94 By M.R Custer MRC
Checked 02/17/95 By G.J Zyn
Location TANK 241-C-106
Revised By

CENTER OF GRAVITY OF THE SKID ASSSEMBLY: (Dry) (Ref. Figures 1,3,4 & 5)

- Center of Gravity, East-West direction:

EPx = Sum vertical loads about the centerline of the W12x40 at west end of the skid.

EPx = [0.92 ft (350 lbs) + 4.17 ft (1200 lbs) + 4.08 ft (150 lbs)

+ 7.75 ft (150 lbs) + 10.75 ft (27000 lbs) + 14.09 ft (1135 lbs)

+ 7.25 ft (400) + 10.20 ft (1000 lbs) + 18.34 ft (700 lbs)

+ 13.39 ft (9551 lbs) + 10.41 ft (6089 lbs) + 10.17 ft (5000 lbs)

+ 12.38 ft (1646 lbs)]/ 54371 lbs =

Use x = 11.08 ft., east of the reference line (11.0 inches east of skid centerline)

- Center of Gravity, North - South direction:

EPz = Sum vertical loads about the centerline of W12x40 at south end of skid.

EPz = [9.25 ft (350 lbs) + 6.70 ft (1200 lbs) + 0.75 ft (150 lbs)

+ 9.50 ft (150 lbs) + 5.25 ft (27000 lbs) + 4.75 ft (1135 lbs)

+ 4.47 ft (400) + 3.18 ft (1000 lbs) + 3.79 ft (700 lbs) + 6.22 ft (9551 lbs)

+ 5.42 ft (6089 lbs) + 5.50 ft (5000 lbs) + 6.17 ft (1646 lbs)]/ 54371 lbs =

Use z = 5.47 ft., north of the reference line (approx. @ the skid centerline)

CENTER OF GRAVITY OF THE SKID ASSEMBLY: Design Location (Wet)(Ref. Figures 1, 3, 4 & 5)

- Center of Gravity, East- West direction:

x = 11.08 ft + [30000 lbs (10.75 ft) + 5000 lbs (4.17 ft)]/ 61171 lbs

- [27000 lbs (10.75 ft) + 1200 (4.17 ft))]/ 54371 lbs =

x = 11.08 ft + 5.61 ft - 5.43 ft

Use x = 11.26 ft, or approx. 13 1/8" east of the skid centerline

KAISER ENGINEERS
HANFORD

Calc. No. W320-24-019
Revision 0
Page No. 10 of 36

DESIGN ANALYSIS

Client WHC
WO/Job No. W-320/ER4319
Subject Prefiltration/Recirculation Skid, Structural Design (Process Building)
Date 05/17/94 By M.R Custer MRC
Checked 02/17/95 By G.J Zyn GJZ
Location TANK 241-C-106
Revised By

- Center of Gravity, North-South direction:

z = 5.48 ft + [30000 lbs (5.25 ft) + 5000 lbs (6.70 ft)]/ 61171 lbs

- [27000 lbs (5.25 ft) + 1200 lbs (6.70 ft)]/ 54371 lbs

z = 5.48 ft + 3.12 ft - 2.75 ft

<u>Use z = 5.85 ft, or approx. 4 1/8" north of the skid centerline</u>

- Eccentricity, East - West direction: (Seismic Loads)

EPx = Sum horizontal loads about centerline of W12x40 at west end of skid.

EPx = [0.92 ft (171 lbs) + 4.17 ft (2435 lbs) + 4.08 ft (73 lbs)
+ 7.75 ft (73 lbs) + 10.75 ft (14610 lbs) + 14.09 ft (553 lbs)
+ 7.25 ft (195 lbs) + 10.20 ft (487 lbs) + 18.34 ft (342 lbs)
+ 13.39 ft (4809 lbs) + 10.41 ft (2965 lbs) + 10.17 ft (2435 lbs)
+ 12.38 ft (802 lbs)] / 29898 =

<u>Use x = 10.64 ft; e(x) = 0.47 ft or approx. 5 5/8 " east of the skid centerline</u>

- Eccentricity, North - South direction: (Seismic Loads)

EPz = Sum horizontal loads about centerline of the W12x40 at south end of skid.

EPz = [9.25 ft (171 lbs) + 6.70 ft (2435 lbs) + 0.75 ft (73 lbs)
+ 9.50 ft (73 lbs) + 5.25 ft (14610 lbs) + 4.75 ft (553 lbs)
+ 4.47 ft (195 lbs) + 3.18 ft (487 lbs) + 3.79 ft (342 lbs)
+ 6.22 ft (4660 lbs) + 5.42 ft (2965 lbs) + 5.50 ft (2435 lbs)
+ 6.17 ft (802 lbs)]/ 29898 lbs =

<u>Use z = 5.54 ft, e(z) = 0.04 ft, or 0.50 " north of the skid centerline</u>

- Eccentricity, Vertical Direction: (Reference Figures 4,5 & 6)

EPh = Sum horizontal loads about the centerline (elevation) of the W12x40

EPh = [2.76 ft (171 lbs) + 2.71 ft (2435 lbs) + 2.75 ft (73 lbs)
+ 2.25 ft (73 lbs) + 6.45 (14610) + 3.29 ft (553 lbs)
+ 4.42 ft (195 lbs) + 3.50 ft (487 lbs) + 3.50 ft (342 lbs)
+ 6.04 ft (4660 lbs) + 0.00 ft (2965 lbs) + 0.52 ft (2435 lbs)
+ 7.16 ft (802 lbs)]/ 29898 lbs =

<u>Use h = 4.79 ft or approximately 57 1/2", above the centerline of the W12 beam</u>

DETERMINE GOVERNING LOAD COMBINATION AND LOADS FOR STRUCTURAL SKID:

<u>Load Combinations:</u>

1) D
2) D + L + (Lr or S or R); Lr, S and R = 0, then D + L
3) D + (W or E), W = 0, then D + E
4) D + L + (Lr or S or R) + (W or E); Lr, S, R and W = 0, then D + L + E

Load combination governing the design is: D + L + E

KAISER ENGINEERS HANFORD

Calc. No. W320-24-019
Revision 0
Page No. 12 of 36

DESIGN ANALYSIS

Client WHC
WO/Job No. W-320/ER4319
Subject Prefiltration/Recirculation Skid, Structural Design (Process Building)
Date 05/17/94 By M.R Custer MRC
Checked 02/17/95 By G.J Zyn GJZ
Location TANK 241-C-106
Revised By

SKID DESIGN:

• DESIGN OF PRIMARY/ SECONDARY FRAMING BEAMS:

The structural frame consists of two wide-flange beams with secondary members provided at the major equipment support locations. These members in addition to diagonal braces and the skid cover plate, provides the required support system. The design of the equipment skid considers two basic design conditions. The first condition involves the design of the skid considering the dead load of the equipment during the loading, transport and unloading of the equipment at the site. The second condition involves the design of the skid at the final design location, where it will be subjected to the live and seismic loads associated with the functioning system.

The beams shall be designed and the beam deflections checked, using both the design load conditions at design location and the rigging/transport loads during the transport operations to consider all load scenarios. The primary differences in the load conditions are (1) the additional seismic load at the design location and (2) the supports and stability concerns for the skid during the rigging operation.

• Beam design - Rigging operation: (Reference Figures 1,2 & 4)

The primary/ secondary beams are designed as simply supported with a span of 13.33 ft or 11.0 ft respectively, as shown in Figure 2. The beams supporting the HEME equipment will govern the design, since the maximum loads are supported by these members. The maximum moment for either the primary and secondary beams is determined as shown in Figure 2 is:

Mmax = 910 k-in

Sreq = Mmax / fb, assume fb = 24 ksi, based on an unbraced length of 5.00 ft

Sreq = 910 k-in / 24 ksi = 37.9 in^3

• Determine the section properties of the 1/2" pl and the W12 x 40 beams:

Ix = 310 in^4 (W12x40), A = 11.8 in^2 (W12 x 40)

I_T, includes 1/2" PL and W12 x 40 beam:

$Ix = Ic + Ad^2$, $Ic = bd^3/ 12$

Ic (plate) = 24.0 $(0.5)^3/ 12$ = 0.25 in^4

Ic (beam) = 310 in^4

KAISER ENGINEERS HANFORD

Calc. No. W320-24-019
Revision 0
Page No. 13 of 36

DESIGN ANALYSIS

Client WHC
WO/Job No. W-320/ER4319
Subject Prefiltration/Recirculation Skid, Structural Design (Process Building)
Date 05/17/94 By M.R Custer MRC
Checked 02/17/95 By G.J Zyn GJZ
Location TANK 241-C-106
Revised By

$\bar{x}$ = [0.50 (24) (12.25) + 11.8 (6.0)]/ 11.8 + 0.5 (24) = 9.15 in.

c_T = 9.15 ", c_c = 3.35 "

$I_T = [Ic + Ad^2] + [Ic + Ad^2]$

$I_T = [0.25 + 0.5(24)(3.10)^2]_{1/2"\ Pl} + [\ 310 + 11.8\ (3.15)^2]_{W12\ beam}$

I_T = 543 in^4, c = 59.3 in^3 (c = 9.15 in)

Sx (total) = 543 in^4/ 9.15 in. = 59.3 in^3 > 37.9 .... ok

DETERMINE INTERMITTANT WELDS ATTACHING 1/2 " COVER PLATE TO W12 BEAMS

- Minimum weld size required per AISC is 3/16" (1/2" cover plate and 1/2" beam flange)
- Minimum length of intermittent weld is 1.5"
- Determine weld requirements for W 12 x 40 and W 12 x 16:

$f_h = V\ a\ y/\ I_x\ n$ (Reference 7)
V = 16.4 kips (Figure 2)

f_h = 16400 k (0.5) (24) (3.10)/ 543 (2) = 562 lb/in
f_h = 562 lbs/in (8)/ 1.5 = 2997 lbs/ in

w (required weld size) = 2997/ 14850 = 0.20", 3/16" = 0.19"

Use minimum weld, 3/16", Adequate, based on the conservative design loads used.

Use 3/16" fillet weld, 1.5" long @ 8" on center with 3" at each end and each side of the beam flange (minimum). Additional weld length will be provided at each equipment attachment point at the 1/2" plate, as required.

DESIGN CONNECTIONS FOR THE PRIMARY AND SECONDARY FRAMING MEMBERS

The connections for the primary and secondary members consist of a coped and welded beam to beam shear and moment resisting connection. The web and beam flanges of the secondary beams will be cut to provide the required fitup for welding the web, using fillet welds each side of the web and full penetration welds connecting the flanges to the primary beams.

KAISER ENGINEERS HANFORD

Calc. No. W320-24-019
Revision 0
Page No. 14 of 36

DESIGN ANALYSIS

Client WHC
WO/Job No. W-320/ER4319
Subject Prefiltration/Recirculation Skid, Structural Design (Process Building)
Date 05/17/94 By M.R Custer MRC
Checked 02/17/95 By G.J Zyn GJZ
Location TANK 241-C-106
Revised By

- Check moment capacity of the W 12x 40 section:

  Applied moment, (M) = 910 k-in,

  $M = T \times d$, $d = 12''$, $T = P_{max} = f_b A$, $.66 F_y(.515)(8) = 97.9$ k ..ok

  <u>M (section) = 97.9 k x 12" = 1175 k-in > 910 k-in .....ok</u>

- Check web shear capacity of the W12 x 40:

  $V_{max} = 16.4$ k,

  $A_w = d_w \times t_w$; $d_w = 9.5$ in, $t_w = 0.295$ in

  $F_v = .40 F_y = 14.4$ ksi, where $F_Y = 36$ ksi

  $f_v = V_{max}/ A_w$

  $f_v = 16.4$ kips/ 9.5 in x 0.295 in = 5.85 ksi < F_v = 14.4 ksi...ok

Required weld (web to web): Minimum weld required is 3/16" per Reference 1:

- Check shear stress on 3/16" fillet weld each side of the web, 9.5" long

  $F_v = 0.707 \times 70$ ksi x 0.30 x 3/16" = 2.8 k/ in

  $f_v = V/A$, 16.4 kips/ (9.5")(2) = 0.86 k/ in

  $f_v = 0.86$ k/ in < 2.8 k/ in .... ok

<u>DESIGN SKID FRAME BRACING SYSTEM AND CONNECTIONS</u>

The braced, secondary members in addition to the skid cover plate provides the required lateral bracing of the compression flange of the primary framing beams. The skid cover plate is designed to support the smaller equipment and piping supports with direct attachment or with the addition of members as required to transfer the loads to the primary structural frame. The larger equipment is supported directly by secondary framing members, provided at the specific equipment locations. The primary function of the bracing members is to distribute the horizontal seismic loads from the HEME (mist eliminator) supports to the primary beams and the foundation anchorage. The maximum brace load consists of the 30.0 kip horizontal seismic load, distributed approximately 50% to each brace, with one pair of braces assumed effective. The critical loading on the braces is the compression load. The load per brace used in the design is 15.0 k, with the brace fixed at each end.

KAISER ENGINEERS HANFORD

Calc. No. W320-24-019
Revision 0
Page No. 15 of 36

DESIGN ANALYSIS

Client WHC
WO/Job No. W-320/ER4319
Subject Prefiltration/Recirculation Skid, Structural Design (Process Building)
Date 05/17/94 By M.R Custer MRC
Checked 02/17/95 By G.J Zyn
Location TANK 241-C-106
Revised By

- Check the W12 x 40 brace member as a column:

Member W12 x 40, Assume 1/2 seismic load is applied to each brace

P = 15.0 kips, fa = P/A = 15.0 k/ 11.8 in^2 = 1.27 ksi

Determine KL/r, where K = 1.0, L = 6.3 ft, r = 1.93 in.

KL/r = 1.0 (6.3)(12")/ 1.93 in = 39.2 < Cc = 126.1, F_a = 19.27

f_a/ F_a = 1.27 ksi/ 19.27 ksi = 0.07 < 0.15 ....ok

The connections of the bracing members to the primary framing members consist of welding the web and flanges of the W12 x 40 brace to the web and flanges of the W12 x 40 primary and secondary beams. Since the loads supported by the braces are significantly less than the loads on either the primary or secondary beams, the connections are acceptable based on the design of primary/secondary beam connections.

DESIGN THE RADIATION SHIELD/ HEME SUPPORT SYSTEM (Ref. Figures 4 & 5)

The radiation shield is analized in conjunction with the HEME support system as an integrated system. The objective in utilizing this approach is to maximize the inherent, structural capacity of the braced, shield plate structure in providing lateral support to the HEME and minimize the overall volume of supporting structures on the skid. This objective was accomplished using Version 2.0 of the "IMAGES" computer program, a finite element analysis program. The input/output data for the analysis is provided in Appendix A, which includes the member stresses, forces, deflections and reactions. The results of the analysis provides the required input for the design of the shield supports and associated connections and the HEME base support, bracing members and connections. Four load cases were analyized based on the D + L + E load combination. Each load case consists of dead loads of the components, accelerated in two directions in addition to the dead load of the HEME and the horizontal seismic components, applied at the center of gravity of the HEME. The load cases are described by the direction of the seismic load, e.g North-South or East-West directions.
Load Case 2 consists of the dead loads only.(Note: The live load in this analysis is negligible)

KAISER ENGINEERS HANFORD

Calc. No. W320-24-019
Revision 0
Page No. 16 of 36

DESIGN ANALYSIS

Client WHC
WO/Job No. W-320/ER4319
Subject Prefiltration/Recirculation Skid, Structural Design (Process Building)
Date 05/17/94 By M.R Custer MRC
Checked 02/17/95 By G.J Zyn
Location TANK 241-C-106
Revised By

ANALYSIS SUMMARY:

The following is a summary of the results of the analysis performed, defined by physical location/ structural interface. The summary provides the maximum forces or stresses as shown in the program output. Maximum force components or stresses required at other locations in the structure are developed by extracting and summarizing the information from the program output data. The following are maximum values as provided by the program:

• CONNECTION OF 1" SHIELD PLATE TO 1" SHIELD PLATE:

PLATE NO.	NODE	FX	FY	FZ	MX	MY	MZ	CASE NO.	DIRECTION
40-55	60	-146	28	122	101	-2091	0	3	X
39-54	60	99	12	-171	0	1786	-63	3	Z

• CONNECTION OF BEAM OR 1" SHIELD PLATE TO 1/2" COVER PLATE:

MEMBER/ NO.	NODE	REACTIONS X	Y	Z	MOMENTS MX	MY	MZ	LOAD CASE	MEMBER
(GLOBAL)									
BEAM 23	5	-447	2916	-509	-429	-147	404	1	TS 4x4
BEAM 29	11	293	752	-91	-289	4519	-741	4	TS 8x4
BEAM 1	1	-22	316	-137	-	-	-	1	TS 4X4
BEAM 2	18	-20	217	34	-	-	-	1	TS 4X4
PLATE 9/10	11	483	2303	470	415	-90	-561	3	1" PLATE

KAISER ENGINEERS
HANFORD

Calc. No. W320-24-019
Revision 0
Page No. 17 of 36

DESIGN ANALYSIS

Client WHC
WO/Job No. W-320/ER4319
Subject Prefiltration/Recirculation Skid, Structural Design (Process Building)
Date 05/17/94 By M.R Custer MRC
Checked 02/17/95 By G.J Zyn GJZ
Location TANK 241-C-106
Revised By

(LOCAL)

MEMBER/	NO.	MAX. STRESS	FORCES AXIAL	YSHEAR	ZSHEAR	COMBSHEAR	BENDING Y	Z	LOAD CASE
BEAM	56	1381	440	458	-202	691	288	654	1,3,4,5
PLATE	40	349	-	-	-	-	-	-	3

• CONNECTION OF TS TO 1" SHIELD PLATE:

BEAM NO.	NODE	AXIAL LOAD	SHEAR Y	Z	TORSION	BENDING Y	Z	LOAD CASE	REMARKS
31/32	60	5	12	-16	1786	-32	5	5	TS 8X4
38/39	82	-21	20	1.5	-3806	29	0	4	TS 4x4
5	98	-807	69	949	-1633	1000	-1180	4	TS 4x4

• CONNECTION OF TS TO TS:

BEAM NO.	NODE	AXIAL LOAD	SHEAR Y	Z	TORSION	BENDING Y	Z	LOAD CASE	REMARKS
44	102	125	30	-17	-510	1517	502	4	HORIZONTAL

The analysis of the structure reveals that the initial member sizes and associated, final stress levels are structurally adequate for the design loads. Additional structural design and evaluation is required, primarily for the welds inter-connecting the individual components of the structure.

The required design/ evaluations are as follows:

• Design connection between 1" the shield wall plates:

Maximum loads @ node no. 60 (plates 40-55): (Load Case 3)

$F_X = 0.146$ k, $F_Y = 0.03$ k, $F_Z = 0.122$ k

$M_X = 0.10$ k-in, $M_Y = 2.09$ k-in $M_Z = 0$

$A = 1"$, $S = 1"/ 3 \text{ in}^2 = 0.333 \text{ in}^2$

$fa = 0.03/ 1 + 0.1/ 0.33 = 0.33$ ksi

$fs = [(2.09 + 0.146)^2 + (0.122)^2]^{1/2} = 2.24$ ksi

$Wo = [(0.33)^2 + (2.24)^2]^{1/2}/ 14.85 = 0.15"$ or 3/16,

Use 5/16" fillet weld (min. weld) = 0.313"

- Design connection between the 1" shield plate and the 1/2" cover plate:

Maximum loads @ node no. 11 (global reactions of plates 9 and 10): (Load Case 3)

$F_X = 0.483$ k $F_Y = 2.30$ k $F_Z = 0.470$ k

$M_X = 0.415$ k-in $M_Y = -0.09$ k-in $M_Z = -0.561$ k-in

$S_X = d^2/ 3 = 0.33 \text{ in}^2$, $S_Y = bd = 1"(1") = 1 \text{ in}^2$

$fx = 0.483/ 2 + 0.09/ 1 = 0.332$ k

$fy = 2.30/ 2 = 1.15$ k

$fz = 0.470/ 2 = 0.235$ k

$Wo = [(0.332)^2 + (1.15)^2 + (0.235)^2]^{1/2}/ 14.85 = 0.08"$

$W = (0.08" \times 12)/ 3 = 0.32"$

Use 5/16" fillet weld, (Weld size is conservative, since the loads used to size the welds are located at the corner at the TS 8 x 4 column. The column acting as a composite section with the plates will significantly, reduce the applied loads on the plate welds).

- Design connection between the TS 4 x 4 brace and the 1/2" cover plate:

Maximum loads @ nodes no. 1 and 18 (Beams 1 and 2): (Load Case 4)

$F_X = 0.02$ k $F_Y = .316$ k $F_Z = -0.137$ k

KAISER ENGINEERS HANFORD

Calc. No. W320-24-019
Revision 0
Page No. 19 of 36

DESIGN ANALYSIS

Client WHC
WO/Job No. W-320/ER4319
Subject Prefiltration/Recirculation Skid, Structural Design (Process Building)
Date 05/17/94 By M.R Custer MRC
Checked 02/17/95 By G.J Zyn GJZ
Location TANK 241-C-106
Revised By

$M_X = 0$ $M_Y = 0$ $M_Z = 0$

Area of the weld, A = 1.5" x 2 = 3"

$W = \{[(0.316/\ 3)^2 + (0.02/\ 3)^2 + (0.137/\ 3)^2\ ]^{1/2}\}/\ 14.85 = 0.008"$

Use 3/16" fillet weld, 1.5" long minimum, each side of TS

- Design connection between horizontal TS to horizontal TS:

Maximum loads @ node no. 102 (Beam 44): (Load Case 4)

$F_X = 0.125$ k $F_Y = 0.03$ k $F_Z = 0.017$ k

$M_X = 0.51$ k-in $M_Y = 1.52$ k-in $M_Z = 0.51$ k-in

Area, A = 4 x 1.5" = 6"

$S = d^2/\ 3 + bd = (1.5)^2/3 + 4(1.5) = 6.75\ in^2$

$Jw = 1.5/\ 6(3 \times 4^2 + 1.5^2) + 4/6\ (4^2 + 3 \times 1.5^2\ ) = 27.73\ in^3$,

$c = (2)^{1/2}\ (2) = 2.828$

$fx = 0.125/\ 6 + (1.52 + 0.510)/\ 6.75 = 0.32$ ksi

$fh = [(0.03/\ 3)^2 + (0.017/\ 3)^2]^{1/2} + [0.51\ (2.828)/\ 27.73] = 0.06$ ksi

$W = \{[(0.32)^2 + (0.06)^2\ ]^{1/2}\}/\ 14.85 = 0.022"$

Use 3/16" weld = 0.19" > 0.022"

- Design connection TS 4 x 4 column to 1/2" plate:

Maximum loads at node no. 5 (Beam B23): (Load Case 1)

$F_X = 0.45$ k $F_Y = 2.92$ k $F_Z = -0.51$ k

$M_X = -0.43$ k $M_Y = -0.147$ k $M_Z = 0.404$ k

Welds to be provided all around the TS member at attachment to the 1/2" plate.

KAISER ENGINEERS HANFORD

Calc. No. W320-24-019
Revision 0
Page No. 20 of 36

DESIGN ANALYSIS

Client WHC
WO/Job No. W-320/ER4319
Subject Prefiltration/Recirculation Skid, Structural Design (Process Building)
Date 05/17/94 By M.R Custer MRC
Checked 02/17/95 By G.J Zyn GJZ
Location TANK 241-C-106
Revised By

Loads and moments resolved to the centerline of the TS and the perimeter weld will be designed:

$A = 2(4) + 2(3) = 14"$, $A1 = 2(4) = 8"$, $A2 = 2(3) = 6"$

$d = (2)^{1/2}\ (2) = 2.83"$

$Sx = 4^2/\ 3 + 3 \times 4 = 17.33\ in^2$, $Sy = 3^2/\ 3 + 4 \times 4 = 10.9\ in^2$

$Jw = [4/6\ (3 \times 4^2 + 4^2)] + [3/6\ (3^2 + 3 \times 4^2) = 71.17\ in^3$

$a = 2.0 + 0.5 = 2.50"$

$F_X = 0.45\ k$ $F_Y = 2.92\ k$ $F_Z = 0.51\ k$

$M_X = 2.92\ k\ (2.50") + 0.43 = 7.73\ k\text{-}in$

$M_Y = 0.15\ k\text{-}in + (0.45 + 0.51)\ 2.50" = 2.55\ k\text{-}in$

$M_Z = 2.92\ k\ (2.50") + 0.40 = 7.70\ k\text{-}in$

$fa = 2.92/\ 14 + (7.73/17.0 + 7.70/\ 19.0) = 1.06\ ksi$

$fs = [(\ 0.45/\ 14)^2 + (0.51/\ 14)^2]^{1/2} + (2.55 \times 2.83)/\ 71.17 = 0.15\ ksi$

$W = \{[(1.06)^2 + (0.15)^2]^{1/2}\ \}/\ 14.85 = 0.072"$

Use 3/16" weld (typ.)

- Design connection TS 8 x 4 column to 1/2" plate:

Maximum loads @ node no. 11 (Beam 29): (Load Case 4)

$F_X = 0.293\ k$ $F_Y = 0.752\ k$ $F_Z = 0.091\ k$

$M_X = 0.289\ k\text{-}in$ $M_Y = 4.519\ k\text{-}in$ $M_Z = 0.741\ k\text{-}in$

Forces applied to centerline of TS 8 x 4 same as above except:

$M_X = 0.29 + 0.752\ (2.5") = 2.17\ k\text{-}in$

$M_Y = 4.52 + 0.293\ (2.5") = 5.25\ k\text{-}in$

KAISER ENGINEERS HANFORD

Calc. No. W320-24-019
Revision 0
Page No. 21 of 36

DESIGN ANALYSIS

Client WHC

Subject Prefiltration/Recirculation Skid, Structural Design (Process Building)

WO/Job No. W-320/ER4319

Date 05/17/94 By M.R Custer MRC

Checked 02/17/95 By G.J Zyn GJZ

Location TANK 241-C-106

Revised By

Weld properties:

$A = 2(8 + 4) = 24$ $S_Z = 4(8) + (8)^2/3 = 53.3\ in^2$

$S_X = 4(8) + (4)^2/3 = 37.3\ in^2$

$S_T = [(4 + 8)^3/6]/\ [(2)^2 + (4)^2\ ]^{1/2} = 64.4$ in

$fa = 0.752/\ 24 + 0.741/\ 53.3 + 2.17/\ 37.3 = 0.10$ ksi

$fs = [(0.293/\ 24)^2 + (0.091/\ 24)^2]^{1/2} + 5.25/\ 64.4 = 0.094$ ksi

$W = \{[(0.10)^2 + (0.094)^2]^{1/2}\}/\ 14.85 = 0.009"$

Use 3/16" weld (typical)

- Design vertical connection between TS 8 x 4 to 1" shield:

Maximum loads @ node no. 60 (Beam B31 and B32): (Load Case 5)

$F_X = 0$ $F_Y = 0.012$ k $F_Z = 0.016$ k

$M_X = 1.79$ k-in $M_Y = 0.032$ k-in $M_Z = 0$

$A = 2\ (1) = 2$

$Sx = 1 \times 4 = 4in^2$, $Sz = 1/3 = 0.33$

$Mx = M_{TORSION} = 1.79 + 0.016 \times 2 = 1.82$ k-in

$V = 1.82/\ 4 + 0.032/\ 0.33 = 0.55$ k

$Wo = 0.55/\ 14.85 = 0.037,\ 0.037\ (12)/3 = 0.148"$

Use 3/16" weld, 3" @ 12" on center

KAISER ENGINEERS
HANFORD

Calc. No. W320-24-019
Revision 0
Page No. 22 of 36

DESIGN ANALYSIS

Client WHC
WO/Job No. W-320/ER4319
Subject Prefiltration/Recirculation Skid, Structural Design (Process Building)
Date 05/17/94 By M.R Custer MRC
Checked 02/17/95 By G.J Zyn
Location TANK 241-C-106
Revised By

- Design connection between the HEME support and the 1" shield plate:

Maximum loads @ node no. 98 (Beam B5): (Load Case 4)

$F_X = -0.807$ k $\quad F_Y = 0.069$ k $\quad F_Z = 0.949$ k

$M_X = -1.63$ k-in $\quad M_Y = 1.00$ k-in $\quad M_Z = 1.18$ k-in

Weld section properties:

$Sw = d^2/ 3 = 6^2/ 3 = 12$ in^2 , $Sw = bd = 0.5(6) = 3$ in^2, $\quad c_h = 0.25"$

$Jw = (b^3 + 3bd^2)/6 = [6.0^3 + 3(6)(0.50)^2]/ 6 = 36.75$ in^3

$fa = 0.807/ 2 + 1.0/ 12 + 1.18/ 3 = 0.88$ ksi

$fs = \{(0.069/ 2)^2 + [0.949 + 1.63\ (0.25)/ 36.75]^2\}^{1/2} = 0.96$ ksi

$Wo = [(0.88^2 + 0.96^2)\ 1/2]/ 14.58 = 0.089"$

Use 3/16" weld all-around connection plate and 3/16", 4" long between the TS and the connection plate at the (4) sides of the slot (typ.)

<u>CHECK LOCAL STRESSES IN THE W12 X 40 BEAMS:</u> (Reference 1, Sections K1.1 and K1.8)

EQ. K1-1, Stiffeners req'd if $t_f < 0.4\ (P_{bf}/ F_{yc})_{1/2}$,

$t_f = 0.515"$, $0.4\ [12\ k\ (4/3)/36]^{1/2} = 0.27$ .... No stiffeners required

EQ. K1-8, Stiffeners req'd if $d_c > [4100\ t_{wc}^3\ (F_{yc})^{1/2}]/ P_{bf}$

$d_c = 12" - 2(1.25") = 9.5" > [4100\ (0.295)^3\ (36)^{1/2}]\ 12\ (4/3) = 39.5"$

.... No stiffeners required

Provide 3/8" stiffener plates, full height between the flanges at each side of W12 beam web at all TS columns, except at framing intersections of the W12 beams. Provide 1/4" fillet weld at (3) sides, each side at each stiffener plate.

KAISER ENGINEERS HANFORD

Calc. No. W320-24-019
Revision 0
Page No. 23 of 36

DESIGN ANALYSIS

Client WHC
Subject Prefiltration/Recirculation Skid, Structural Design (Process Building)

WO/Job No. W-320/ER4319
Date 05/17/94 By M.R Custer MRC
Checked 02/17/95 By G.J Zyn G.J.Z
Location TANK 241-C-106
Revised By

CHECK THE 1/2" SKID COVER PLATE AT EACH EQUIPMENT ATTACHMENT LOCATION:

The 1/2 " skid cover plate, provides the structural support for the minor equipment located on the equipment skid. The major equipment, such as the HEME, condenser and the moisture separator are supported directly by the primary/ secondary beams as part of the basic skid structure. The support/ anchorage system for the smaller equipment and miscellaneous supports (i.e pipe, electrical and instrumentation as listed), will be evaluated for direct attachment to the 1/2" plate. Supplemental, structural members will be provided as required. The supplemental, structural steel includes the support of the 1/2" plate to be provided to span the 10" gap between the equipment skid and the concrete curb.

DESCRIPTION	LOAD (kips) Vert./Horiz.	HEIGHT (ft.)	SUPPORT LOCATION(S) x (ft.)	z (ft.)	PLATE SPAN (ft.)
1) Recirc fan (FN-1361)	0.35/ 0.17	2.26	9.25	0.92	4.20/BM
2) Heat Coil (HC-1361)	0.15/ 0.07	2.26	0.75	4.08	4.08/BM
3) Air Receiver Tank (TK-1361)	0.15/ 0.07	1.50	9.50	7.75	4.83/BM
4) Rad. Monitor (RE-1362)	0.80/ 0.32	2.00	9.71	9.83	3.50

Support attachments ...ok based on the small magnitude of the applied loads.

• Design supplemental support beams at the perimeter of the skid to support the Mini Power panel/ Instrument Panel at the 10" gap:
The support beams are W12 x 40 wide-flange beams, cantilevered from the W12 primary and secondary members. The loading on the W12 beams includes the dead weight of the plate and the greater of a 100 lb/sf live load or the equipment weight (Mini Power Panel or Instrument Panel). Design of the W12 x 40 beams is adequate based on the previous calculations for the W12 beams.

NOTE:

1) Mini Power Panel: (Ref. Section E, drawing H-2-818678), Total weight, Wt.= 275 lbs, area occupied, 32" x 32".
2) Instrument Panel: (Reference drawing H-2-818588), Total Wt.= 300 lbs, area occupied is 24" x 30".

KAISER ENGINEERS HANFORD

Calc. No. W320-24-019
Revision 0
Page No. 24 of 36

DESIGN ANALYSIS

Client WHC
WO/Job No. W-320/ER4319
Subject Prefiltration/Recirculation Skid, Structural Design (Process Building)
Date 05/17/94 By M.R Custer MRC
Checked 02/17/95 By G.J Zyn GJZ
Location TANK 241-C-106
Revised By

CHECK DESIGN OF EQUIPMENT SUPPORTS: (Reference drawing H-2-818480, sht. 3 of 7)

- Recirculation Fan base support (FN-1361):
  P_v = 350 lbs, P_h (seismic) = 171 lbs

- Heating Coil base support (HC-1361): Critical check, individual TS 2x2 as column
  P_v = 150 lbs, P_h (seismic) = 73 lbs

Base supports for the Recirculation fan and the Heating Coil are acceptable by engineering judgment based on the small magnitude of the loads.

- Heat Exchanger (Condenser, HX-1361):

P_v = 5000 lbs, P_h (seismic) = 2447 lbs

P_{max} = 5.0 k/ 4 + 2.45 (27")/13 (2) = 3.79 k (1.5) = 5.69 k

M_{max} = [2.45 k (2.25 ft x 12")]/ 4 = 16.54 k-in (1.5) = 24.8 k-in

kl/r = 1.0 (11")/ 1.45 = 7.6, use 8, Fa = 21.3 ksi

f_a/F_a = (5.69/ 5.08)/ 21.3 = 0.053 < 0.15 .... ok

f_b = 24.8/ 5.35 = 4.6 ksi.... negligible

Check weld at leg support:

Sx = Sy = bd + d^2/ 3 = (4 x 4) + 4^2/ 3 = 21.33 in^2

f_w = $[(2.45\ k/\ 4 \times 16")^2 + (24.8\ k\text{-}in/\ 21.33)^2]^{1/2}$ = 1.16 k/in

f_w = 1.16 k/in < f = 0.707 (1/4") 14.85 ksi = 2.62 k/in .... weld ok

KAISER ENGINEERS HANFORD

Calc. No. W320-24-019
Revision 0
Page No. 25 of 36

DESIGN ANALYSIS

Client WHC
WO/Job No. W-320/ER4319
Subject Prefiltration/Recirculation Skid, Structural Design (Process Building)
Date 05/17/94 By M.R Custer MRC
Checked 02/17/95 By G.J Zyn GJZ
Location TANK 241-C-106
Revised By

DESIGN LIFTING LUGS:

The rigging of the skid for transport to the design location will be accomplished using manufactured lifting rings at (4) specific locations on the primary beams of the equipment skid. The lifting rings are designed to accomodate rigging slings used in conjunction with a lifting frame for lifting the equipment skid for transport and placement at the design location. The lifted load at each of the (4) attachment points, as shown on drawing H-2-818455, sht. 1, is a maximum of 16,500 lbs per location. Pre-manufactured, heavy-duty, safety hoist rings (item HR-125) by the Crosby group, Inc., per page 101, catalog dated April 1994 (stock no. 1016986), with a work load limit of 24,000 lbs will be used. The hoist rings shall be provided each with a heavy hex nut per ASTM A-561 (grade 8) with UNC-3A thread.

Design lifting lug support at the skid:

Check tension on the 1/2" flange plates:

Pmax (maximum load per lug) = 16500 lbs

Mmax (applied) = 16500 lbs x 7" = 116 k-in

d, depth of member = 12"

T = Pmax = Mmax/ d = 116/ 12" = 9.7 kips

A, (area of flange req'd) = Pmax/ fb = 9.7/ 24 ksi = 0.40 in^2

A provided = 10" x 1.0" = 10.0 in^2 > 0.44 in^2 .... ok

Use flange plates, 1" x 10", top plate

Check tension on (2), 1/2" web plates:

P (axial load on each plate) = 16500 lbs/ 2 = 8300 lbs = 8.3 kips

A, area req'd = 8.3 k/ 24 ksi = 0.35 in^2

A provided = 0.5" x (3.75") = 1.88 in^2 > 0.35 in^2 .... ok

Use (2)- 1/2" x 3 3/4" web plates

Check bending on built-up section: Note: Built-up section includes (2), 1/2" web plates and (1), 1" top flange plate.

KAISER ENGINEERS HANFORD

Calc. No. W320-24-019
Revision 0
Page No. 26 of 36

DESIGN ANALYSIS

Client WHC
WO/Job No. W-320/ER4319
Subject Prefiltration/Recirculation Skid, Structural Design (Process Building)
Date 05/17/94 By M.R Custer MRC
Checked 02/17/95 By G.J Zyn GJZ
Location TANK 241-C-106
Revised By

Determine centroid of the area at the critical section, 7" from the W12 centerline:

$\bar{x} = ([5.25\ (2)(0.5)(10.5)]_{A1} + [1(10)(11.0)]_{A2} + [3/8(6)(10.31)]_{A3})$
$/\ 2(0.5)(10.5) + 1.0\ (10) + 3/8(6)$

$\bar{x} = 8.28"$

$Ix = 2\ [bd^3/\ 12 + Ad^2]_{A1} + [bd^3/\ 12 + Ad^2]_{A2} + [bd_3/\ 12 + Ad^2]_{A3}$

$Ix = 2\ [(0.5)(10.5)^3/\ 12 + 10.5(0.5)(3.03)^2] + [(10)(1.0)^3/12 + (10)(1.0)(2.72)^2]$

$+ [(6)(3/8)^3/12 + (6)(3/8)(2.03)^2] =$

$Ix = 192.9 + 74.8 + 9.3 = 277\ in^4$, $c = 8.28"$

$Sx = 277/\ 8.28 = 33.5\ in^3$

$Fb = Mmax/\ Sx = 116/\ 33.5 = 3.47\ ksi < fb = .6\ (36\ ksi) = 21.6\ ksi$ .... ok

Check critical welds as follows:

1) Web plates to the W12 web:

$Fv = .707(.25)(70)(0.30) = 3.71\ k/in \times 2 = 7.42\ k/in$

$fv = 8.3\ k/\ 10"(2) = 0.42\ k/in < 7.42$ ... ok (conservative)

2) Web plates to the flange plates:

$fh = V\ A\ y/\ Ix\ n = 16.5\ k\ (1.0")(10")(2.72")/\ 277\ in^4\ (4)$

$fh = 0.41\ k/in < 3.71\ k/in$ .... ok

3) Full penetration flange to flange welds adequate, based on the previous design of the flange, since the welds are higher strength than the base material with equal thickness.

Provide built-up lugs at each lift point on the skid as shown per Attachment A, per drawing H-2-818455, sheets 1 of 5).

Calc. No. W320-24-019
Revision 1
Page No. 27 of 36

DESIGN ANALYSIS

Client WHC
Subject Prefiltration/Recirculation Skid, Structural Design (Process Building)

WO/Job No. W-320/ER4319
Date 06/28/96 By M.R Custer MRC
Checked 7/17/96 By
Location TANK 241-C-106
Revised By

DESIGN SKID ANCHORAGE:

The anchorage system for the HVAC skid assembly is provided through the use of 1.0 ft x 1.0 ft leveling plates and 1" dia. embedded anchor bolts. The design of the embedded anchor bolts are based on the use of (12) anchors and the following:

- Total horizontal shear force (global) on the skid = 30.0 kips
  Shear force per anchor is 30.0/ 12 = 2.5 kips

- Maximum vertical force (global) on the skid anchors, results from the 30 kip horizontal, seismic component (East-West direction), acting at the center of gravity of the skid assembly, 4.79 ft above the centerline of the W12 skid beams (Figure 5). The tension force/ anchor is determined as follows:

- Forces on anchor bolts:

  F + 0.63 F + 0.22 F = 0.14 F1 + 0.59 F1 + F1

  1.85 F = 1.73 F1

  F1 = 1.069 F

  Summation of moments about the Center of Gravity: DL = 61.3 k/ 20.33 ft= 3.03 k

  30 k (4.79 ft)/ 2 + 3.03 k (12.39 ft)/ 2 - 3.03 k (7.94 ft)/ 2 = F (11.26 ft)

  + 0.63F (7.09 ft) + 0.22F (2.43 ft) + 0.16F (1.24 ft) + 0.63F (5.32 ft)

  + 1.07F (9.07 ft)

  78.59 = 11.26F + 4.47F + 0.54F + 0.20F + 3.35F + 9.71F

  F = 78.59/ 29.53 = 2.66 k, F1 = 1.07 (2.66 k) = 2.85 k

- Summary of the applied anchor loads: Shear = 2.50 k, Tension = 2.85 k

- Allowable anchor loads for 1" dia. A 307 embedded anchors per Reference 2, Table 26-E, page 547 (UBC 1991 Edition)

  Shear = 4150 lbs

  Tension = 3200 lbs x 2 = 6400 lbs

KAISER ENGINEERS HANFORD

Calc. No. W320-24-019
Revision 0
Page No. 28 of 36

DESIGN ANALYSIS

Client WHC
WO/Job No. W-320/ER4319
Subject Prefiltration/Recirculation Skid, Structural Design (Process Building)
Date 05/17/94 By M.R Custer MRC
Checked 02/17/95 By G.J Zyn GJZ
Location TANK 241-C-106
Revised By

- Check Combined Load equation:

  $[V/\ V\ (\text{allowable})]^{5/3} + [T/\ T\ (\text{allowable})]^{5/3} < \text{or} = 1.0$ (Reference 2)

  then: $(2.5/\ 4.15)^{5/3} + (2.85/\ 6.4)^{5/3} = 0.43 + 0.26 = 0.69 < 1.0$ ....ok

  Use 12 - 1 " Dia. A 307 embedded anchor bolts w/ minimum 7" embedment, minimum edge distance is 6" and minimum spacing of 12" with special inspection.

- Check pullout capacity of the concrete and compare to the maximum bolt capacity:

  $Pu\ (\text{concrete}) = Ae\ (4)\ (0.65)\ (4000)^{1/2}$

  where, $Ae = 3.1416\ [\ 7^2 + 1.63(7)] = 189.8\ in^2$

  $Pu\ (\text{concrete}) = 189.8\ (4)\ (0.65)\ (63.25) = 31.2\ k$

  $Pu\ (\text{steel}) = Fy\ At,\ At = 0.606\ in^2$

  $Pu = 36\ ksi\ (0.606) = 21.8\ k < 31.2\ k$ .... ok, Bolt will yield before concrete

ICF KAISER HANFORD

DESIGN ANALYSIS

Calc. No.: W320-24-019
Revision: 0
Page No.: 29 of 36

Client: WHC
Subject: Prefiltration/Recirculation Skid Structural Design (Process Building)
Location: TANK 241-C-106

WO/Job No.: W-320/ER4319
Date: 05/17/94
Checked: 2/17/95
Revised:

By: M.R. Custer MRC
By: George J. Zyn
By:

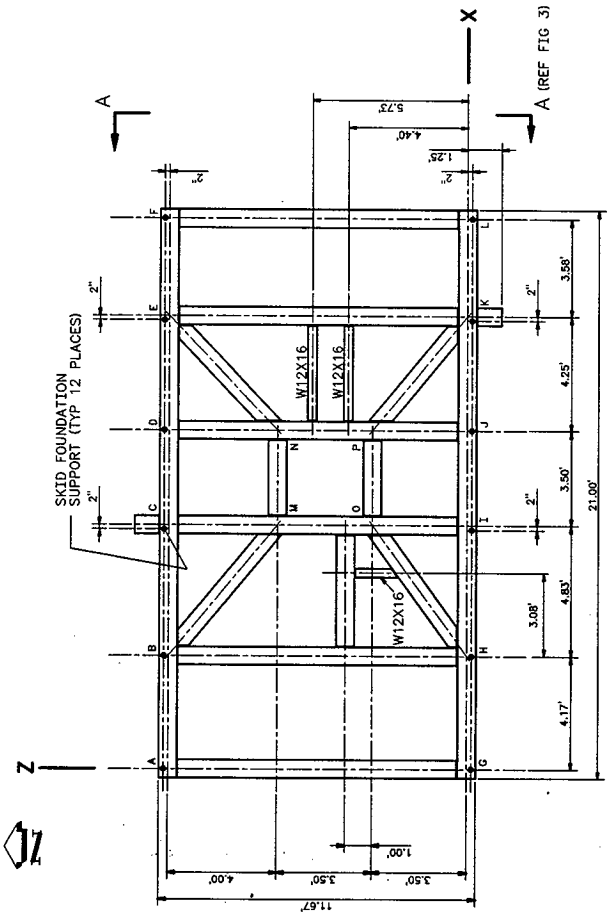

NOTE: ALL BEAMS ARE W12X40 UNLESS NOTED

PLAN

FIGURE 1

(SKID FRAME CONFIGURATION)

ICF KAISER HANFORD

DESIGN ANALYSIS

Calc. No.: W320-24-019
Revision: 0
Page No.: 30 of 36

Client: WHC
Subject: Prefiltration/Recirculation Skid
Structural Design (Process Building)
Location: TANK 241-C-106

WO/Job No.: W-320/ER4319
Date: 05/17/94
Checked: 2/17/95
Revised:

By: M.R. Custer MRC
By: George T. Zyn
By:

BEAM/LOAD CONFIGURATION FOR PRIMARY/ SECONDARY BEAMS (RIGGING PHASE).

RIGGING LOAD (D.L.) = 54.8^K

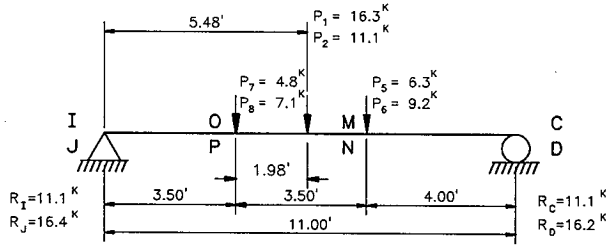

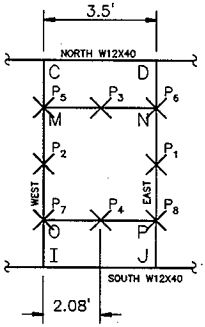

SECONDARY BEAMS

$P = 54.8^K$

$P_1 = (2.08'/3.5')(0.5)54.8^K = 16.3^K$

$P_2 = (1.42'/3.5')(0.5)54.8^K = 11.1^K$

$P_3 = (1.98'/3.5')(0.5)54.8^K = 15.5^K$

$P_4 = (1.52'/3.5')(0.5)54.8^K = 11.9^K$

$P_5 = (1.42'/3.5')P_3 = 6.3^K$

$P_6 = (2.08'/3.5')P_3 = 9.2^K$

$P_7 = (1.42'/3.5')P_4 = 4.8^K$

$P_8 = (2.08'/3.5')P_4 = 7.1^K$

$M_{MAX\ (J,P,N,D)} = 16.4^K(3.5\ FT) + (16.4^K - 7.1^K)(1.98FT)$

$M_{MAX\ (J,P,N,D)} = 75.8^{K\text{-}FT} = 910^{K\text{-}"}$

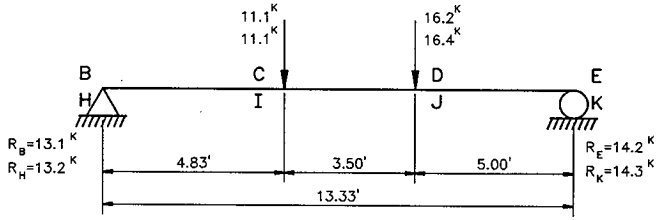

PRIMARY BEAMS

$M_{MAX\ (H,I,J,K)} = 13.2^K(4.83FT) + (13.2^K - 11.1^K)(3.5FT)$

$M_{MAX\ (H,I,J,K)} = 71.1^{K\text{-}FT} = 853^{K\text{-}"}$

$M_{MAX\ (B,C,D,E)} = 70.3^{K\text{-}FT} = 843^{K\text{-}"}$

FIGURE 2

ICF KAISER HANFORD

DESIGN ANALYSIS

Calc. No.: W320-24-019
Revision: 0
Page No.: 31 of 36

Client: WHC
Subject: Prefiltration/Recirculation Skid
Structural Design (Process Building)
Location: TANK 241-C-106

WO/Job No.: W-320/ER4319
Date: 05/17/94
Checked: 2/17/95
Revised:

By: M.R. Custer MRC
By: George T. Zyn
By:

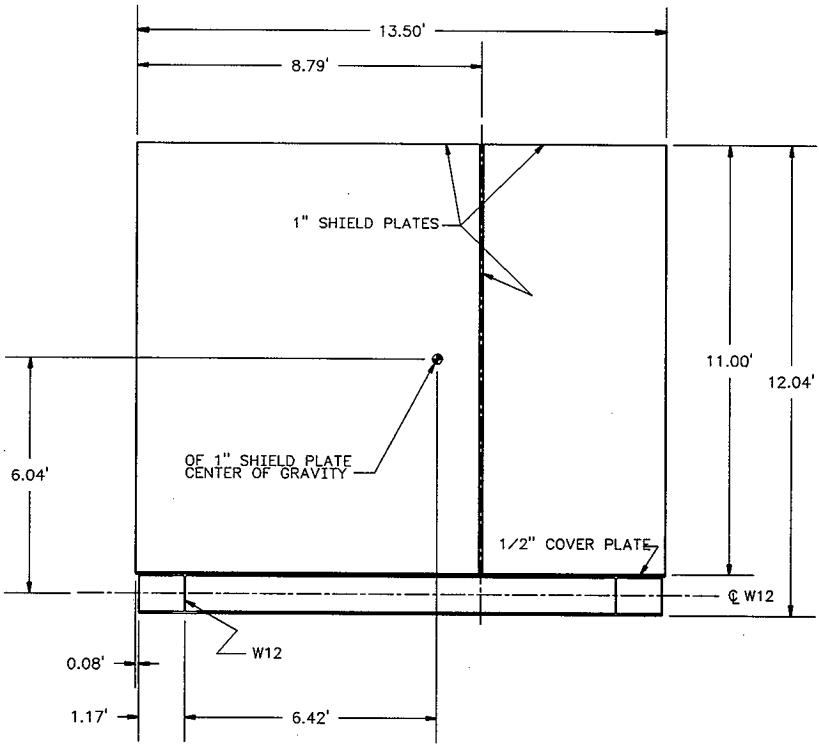

ELEVATION A-A (REF FIG 1)

FIGURE 3

ICF KAISER HANFORD

DESIGN ANALYSIS

Calc. No.: W320-24-019
Revision: 0
Page No.: 32 of 36

Client: WHC
Subject: Prefiltration/Recirculation Skid
Structural Design (Process Building)
Location: TANK 241-C-106

WO/Job No.: W-320/ER4319
Date: 05/17/94
Checked: 2/17/95
Revised:

By: M.R. Custer MRC
By: George T. Zyl
By:

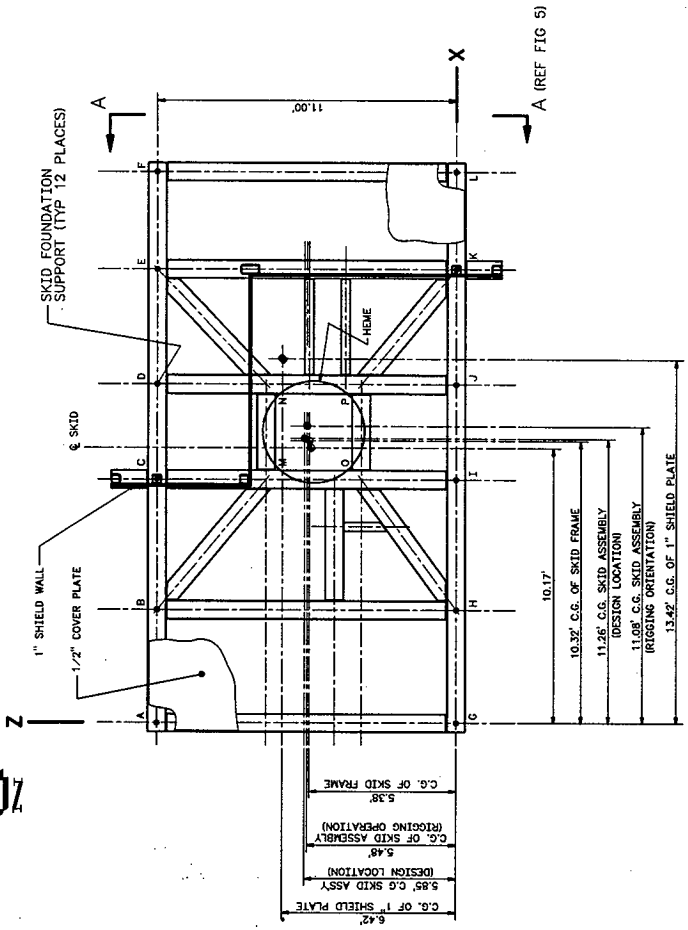

PLAN
FIGURE 4
(SKID ASSEMBLY)

ICF KAISER HANFORD

DESIGN ANALYSIS

Calc. No.: W320-24-019
Revision: 0
Page No.: 33 of 36

Client: WHC
Subject: Prefiltration/Recirculation Skid
Structural Design (Process Building)
Location: TANK 241-C-106

WO/Job No.: W-320/ER4319
Date: 05/17/94
Checked: 2/17/95
Revised:

By: M.R. Custer MRC
By: George T. Zyne
By:

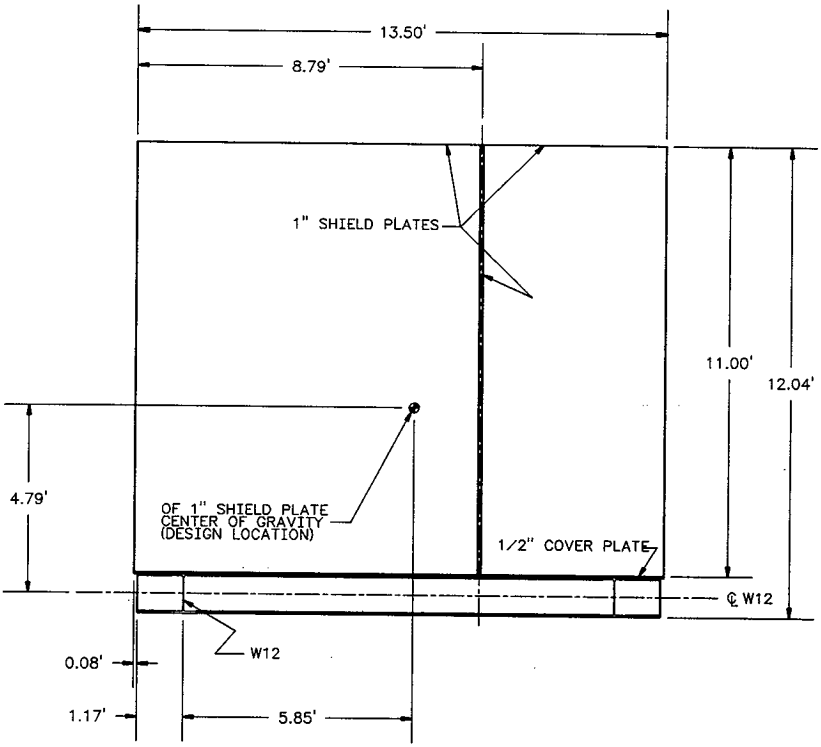

ELEVATION A-A (REF FIG 4)

FIGURE 5

ICF KAISER HANFORD

DESIGN ANALYSIS

Calc. No.: W320-24-019
Revision: 0
Page No.: 34 of 36

Client: WHC
Subject: Prefiltration/Recirculation Skid
Structural Design (Process Building)
Location: TANK 241-C-106

WO/Job No.: W-320/ER4319
Date: 05/17/94
Checked: 2/17/95
Revised:

By: M.R. Custer MRC
By: George J. Ryan
By:

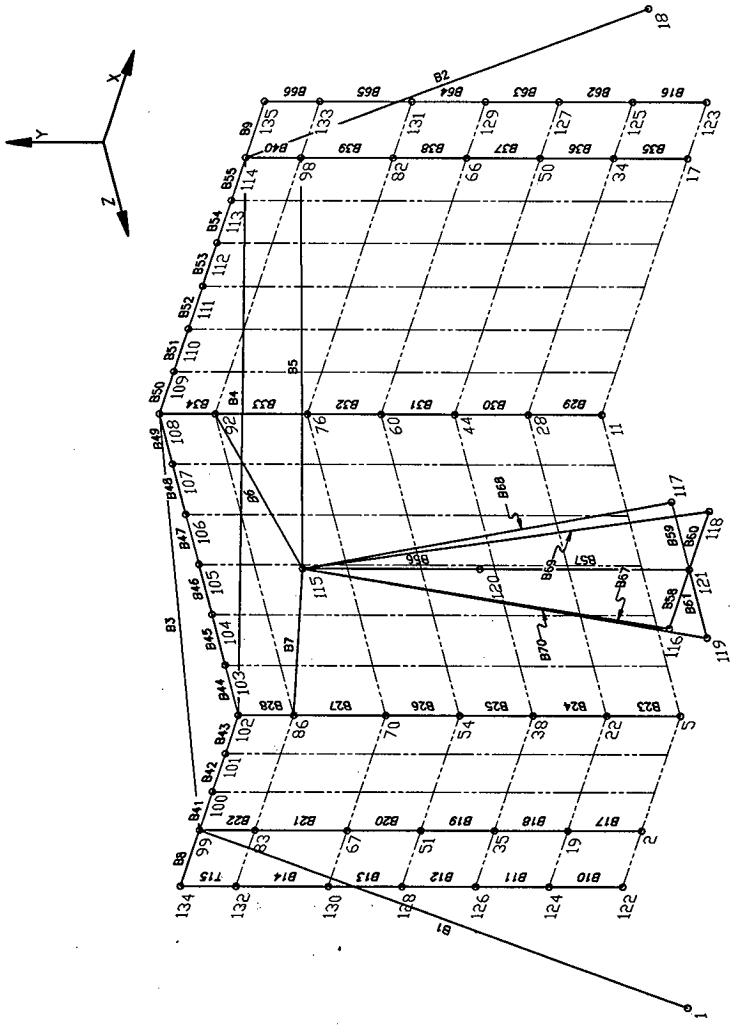

ICF KAISER HANFORD

DESIGN ANALYSIS

Calc. No.: W320-24-019
Revision: 0
Page No.: 35 of 36

Client: WHC
Subject: Prefiltration/Recirculation Skid
Structural Design (Process Building)
Location: TANK 241-C-106

WO/Job No.: W-320/ER4319
Date: 05/17/94
Checked: 2/17/95
Revised:

By: M.R. Custer MRC
By: George J. Zyn
By:

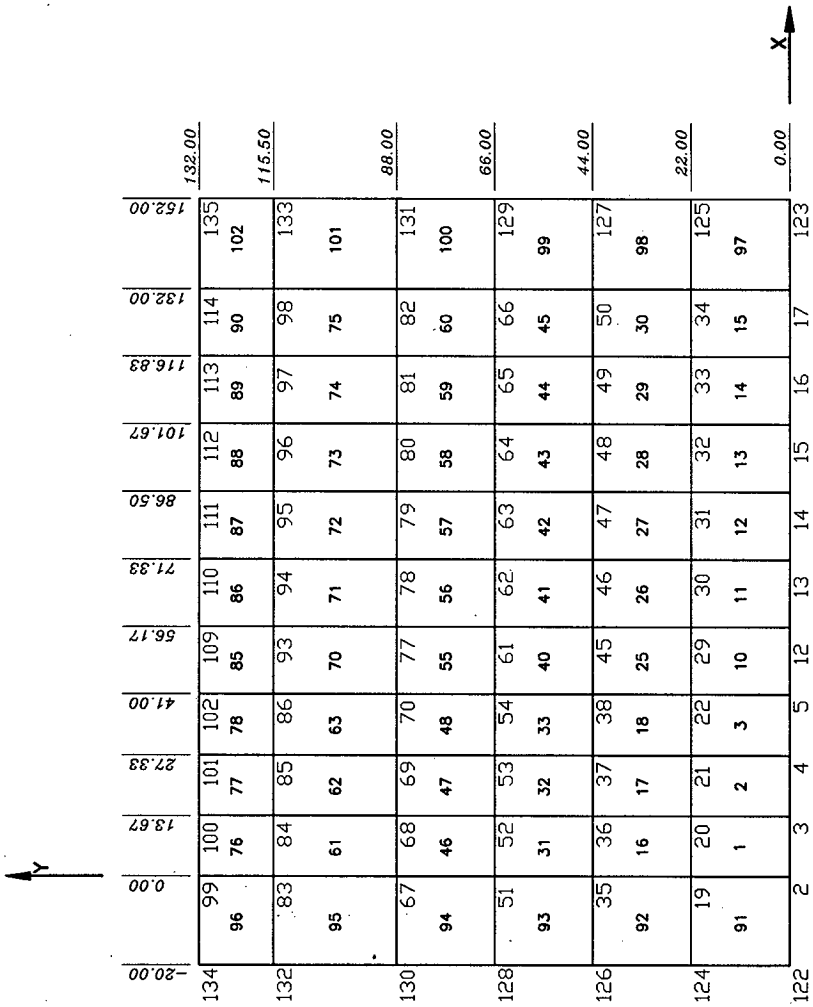

NODE LOCATION AND ELEMENT CONNECTIVITY 46.0<Z<139.0
(SHIELD PLATE ONLY)

ICF KAISER HANFORD

DESIGN ANALYSIS

Calc. No.: W320-24-019
Revision: 0
Page No.: 36 of 36

Client: WHC
Subject: Prefiltration/Recirculation Skid
Structural Design (Process Building)
Location: TANK 241-C-106

WO/Job No.: W-320/ER4319
Date: 05/17/94
Checked: 2/17/95
Revised:

By: M.R. Custer MRC
By: George T Zyn
By:

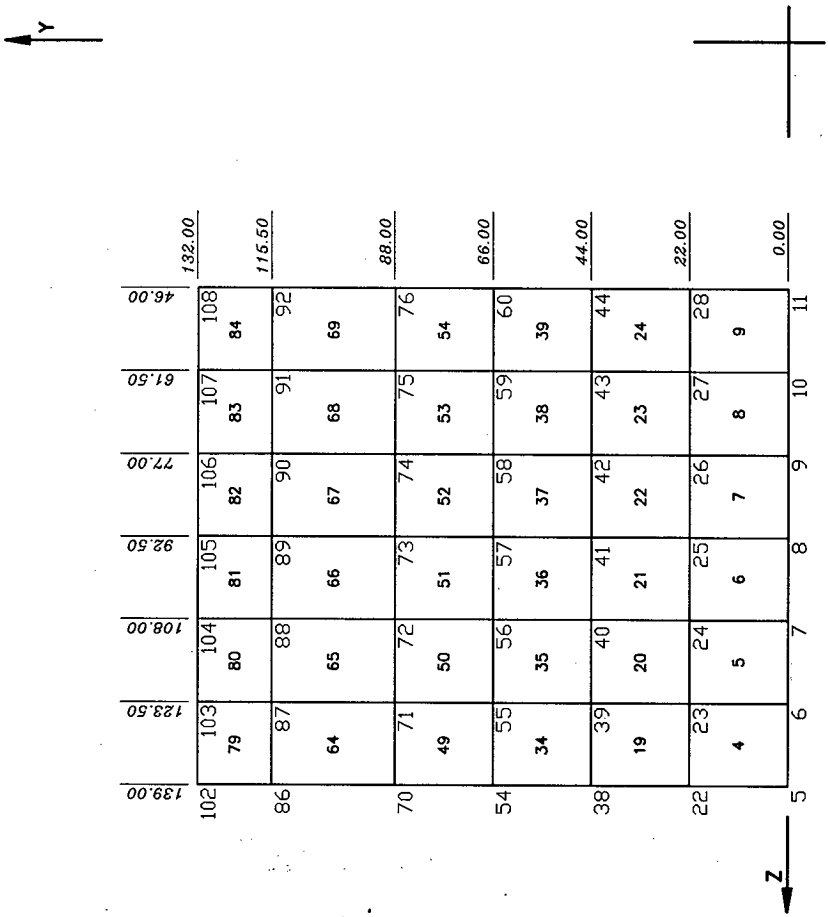

NODE LOCATION AND ELEMENT CONNECTIVITY AT X=41.0
(SHIELD PLATE ONLY)

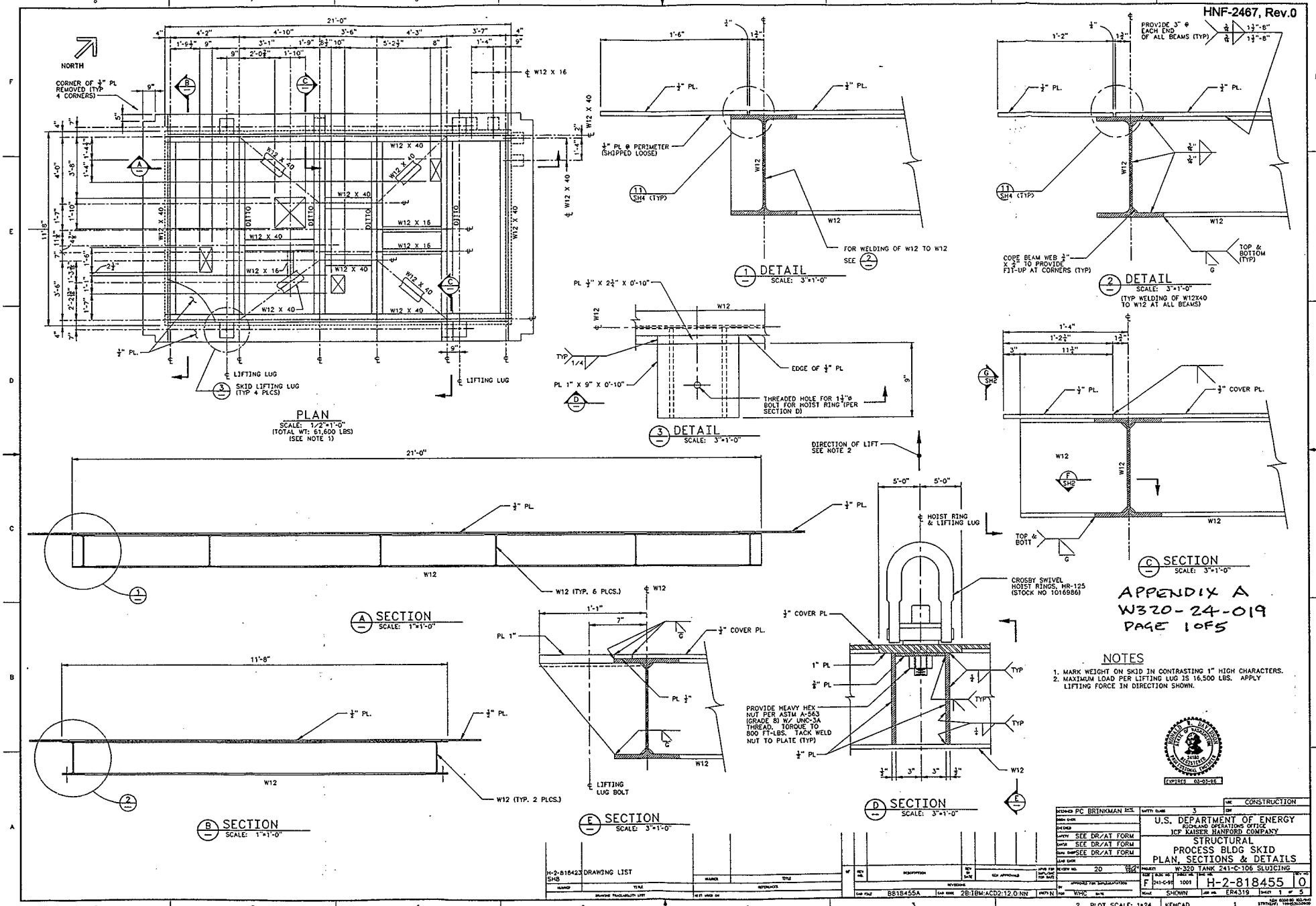

APPENDIX A
W320-24-019
PAGE 1 OF 5

NOTES

1. MARK WEIGHT ON SKID IN CONTRASTING 1" HIGH CHARACTERS.
2. MAXIMUM LOAD PER LIFTING LUG IS 16,500 LBS. APPLY LIFTING FORCE IN DIRECTION SHOWN.

EXPIRES 03-03-96

DESIGNED PC BRINKMAN	SAFETY CLASS 3
DRAWN ENGR	
CHECKED	
APPLY SEE DR/AT FORM	
DATE SEE DR/AT FORM	
DWG ENGR SEE DR/AT FORM	
LEAD ENGR	
REVIEW NO. 20	
APPROVED FOR IMPLEMENTATION	
BY WHC	DATE

U.S. DEPARTMENT OF ENERGY
RICHLAND OPERATIONS OFFICE
ICF KAISER HANFORD COMPANY

STRUCTURAL
PROCESS BLDG SKID
PLAN, SECTIONS & DETAILS

PROJECT W-320 TANK 241-C-106 SLUICING

SIZE	BLDG NO.	SHEET NO.	DWG NO.	REV NO.
F	241-C-91	1001	H-2-818455	0

SCALE SHOWN | JOB NO. ER4319 | SHEET 1 OF 5

H-2-818423 DRAWING LIST SH8

CAD FILE B818455A | CAD CODE 2B:IBM:ACD2:12.0:NN | SHEET N

PLOT SCALE: 1=24 | KEHCAD

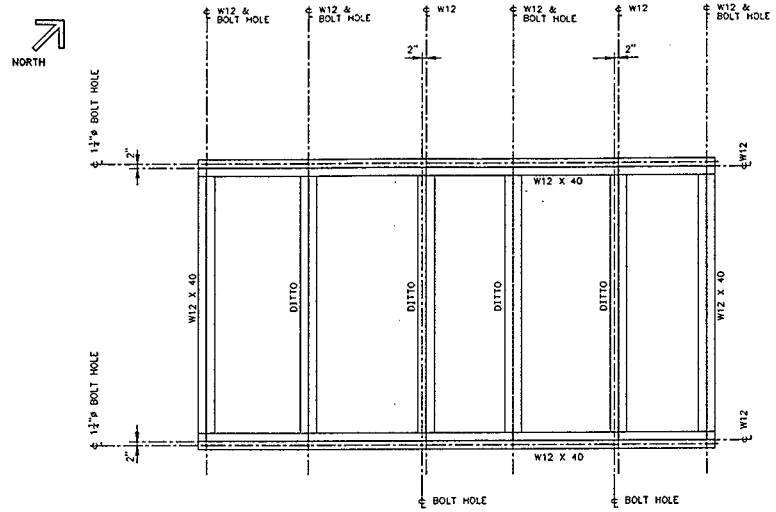

PLAN-SKID ANCHOR BOLT HOLE LOCATIONS-BOTT FLG
SCALE: 1/2"=1'-0"

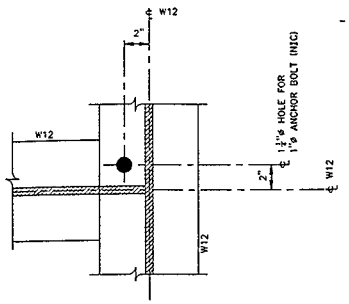

F SH1 SECTION
SCALE: 3"=1'-0"

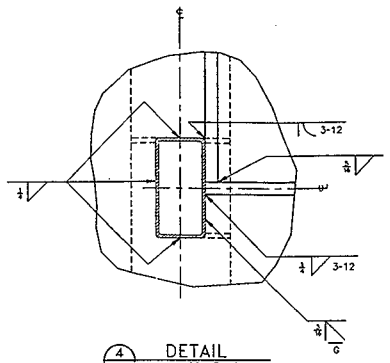

4 SH4 DETAIL
SCALE: 3"=1'-0"

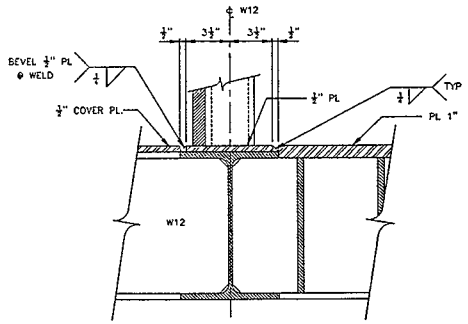

G SH1 SECTION
SCALE: 3"=1'-0"

APPENDIX A
W320-24-019
PAGE 2 OF 5

NOTES

1. ANCHOR BOLTS FOR BOTT FLANGE OF SKID ARE INCLUDED IN OTHER CONTRACT PACKAGE.

RONALD T. DAVIDSON
STATE OF WASHINGTON
24180
REGISTERED PROFESSIONAL ENGINEER
EXPIRES 03-03-98

DESIGNED PC BRINKMAN	SAFETY CLASS 3
DRAWN BY	
CHECKED	
SAFETY SEE DR/AT FORM	
DAYCO SEE DR/AT FORM	
DRAWN SHAPE SEE DR/AT FORM	
SAR CLASS	
REVIEW NO. 5	

USE CONSTRUCTION

U.S. DEPARTMENT OF ENERGY
RICHLAND OPERATIONS OFFICE
JCP KAISER HANFORD COMPANY

STRUCTURAL
PROCESS BLDG SKID
PLAN, SECTIONS & DETAILS

PROJECT W-320 TANK 241-C-106 SLUICING

SIZE	BLDG. NO.	PART NO.	DWG NO.	REV NO.
F	241-C-93	1001	H-2-818455	0

SCALE SHOWN | JOB NO. ER4319 | SHEET 2 OF 5

SAR FILE BB18455B | SAR DOM 2B:IBM:ACD2:12.0:NN | UNIT N | PLOT SCALE: 1=24 | KEHCAD

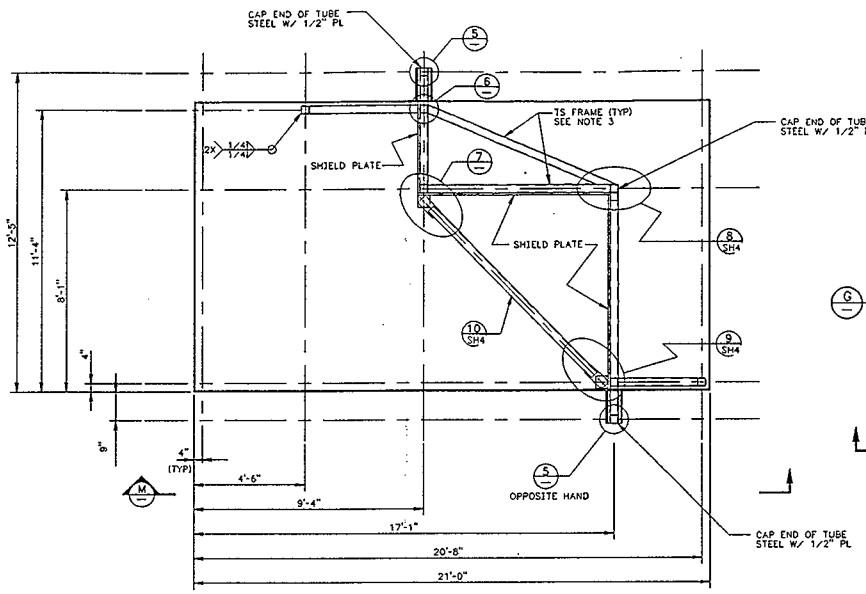

PLAN VIEW
SCALE: 1/2" = 1'-0"

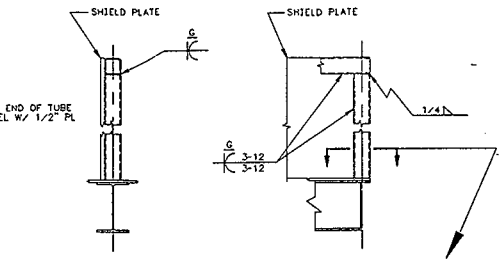

G SECTION

H SECTION

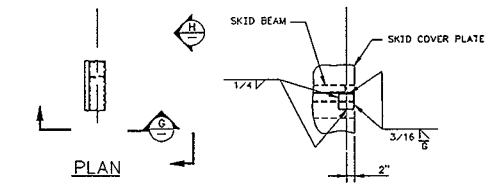

PLAN

5 DETAIL
1" = 1'-0"

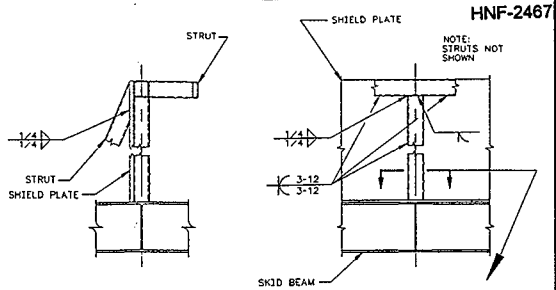

I SECTION

J SECTION

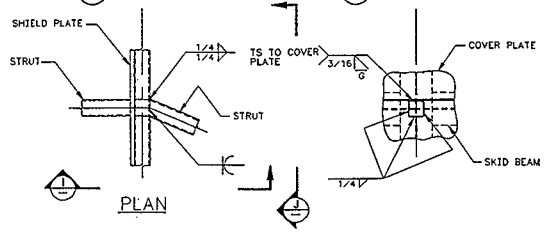

PLAN

6 DETAIL
1" = 1'-0"

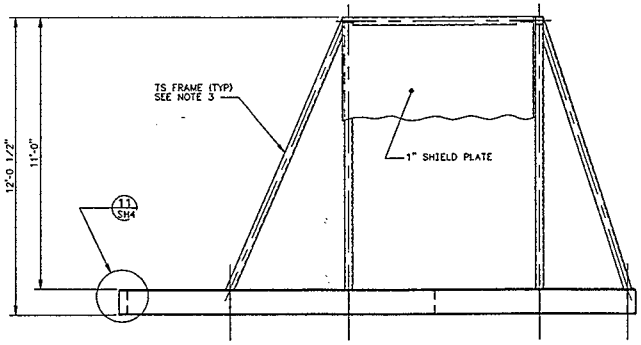

M ELEVATION-TS FRAME/SHIELD PLATE
SCALE: 1/2"=1'-0"

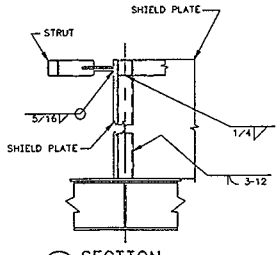

K SECTION

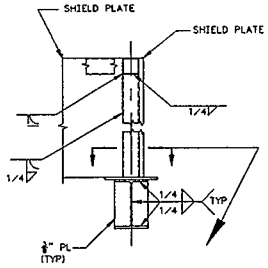

L SECTION

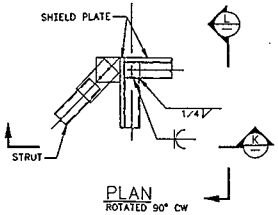

PLAN
ROTATED 90° CW

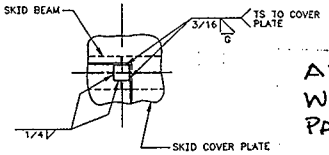

7 DETAIL
1" = 1'-0"

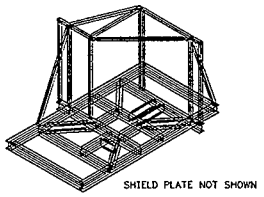

3-D VIEW NE
SCALE: 3/16" = 1'-0"

NOTES:

1. ALL MATERIALS AND FABRICATION ARE IN ACCORDANCE WITH SPECIFICATION W-320-C6.
2. BOLTS ARE ø3/4" ASTM A325 WITH ø13/16" HOLES. ALLOW 1 1/4" EDGE DISTANCE MINIMUM FOR HOLES.
3. ALL FRAMING MEMBERS FURNISHED SHALL BE TS 4"X4"X1/4" EXCEPT AS NOTED ON SH4 (DETAIL 13).

APPENDIX A
W320-24-019
PAGE 3 OF 5

(TYP)RCS 03-03-05

DESIGNED JG RUPERT	SAFETY CLASS 3	USE CONSTRUCTION
DRAWN CHKR		
CHECKED	U.S. DEPARTMENT OF ENERGY RICHLAND OPERATIONS OFFICE ICP KAISER HANFORD COMPANY	
SAFETY SEE DR/AT FORM	STRUCTURAL PROCESS BLDG SKID PLAN, ELEV, SECTS & DETAILS	
DATUM SEE DR/AT FORM		
CONS. CHKR SEE DR/AT FORM		
LEAD CHKR		
REVISION NO. 11	PROJECT W-320 TANK 241-C-106 SLUICING	
SIZE F	BLDG. NO. 241-C-01	SHEET NO. 1001	DWG. NO. H-2-818455	REV. NO. 0
SCALE SHOWN	JOB NO. ER4319	SHEET 3 OF 5
CAD FILE B818455C	CAD CODE 2B:1BM.ACD2:12.0:NN	SHEETS N
APPROVED FOR CONSTRUCTION BY WHC		

PLOT SCALE: 1:1 | BENGAR

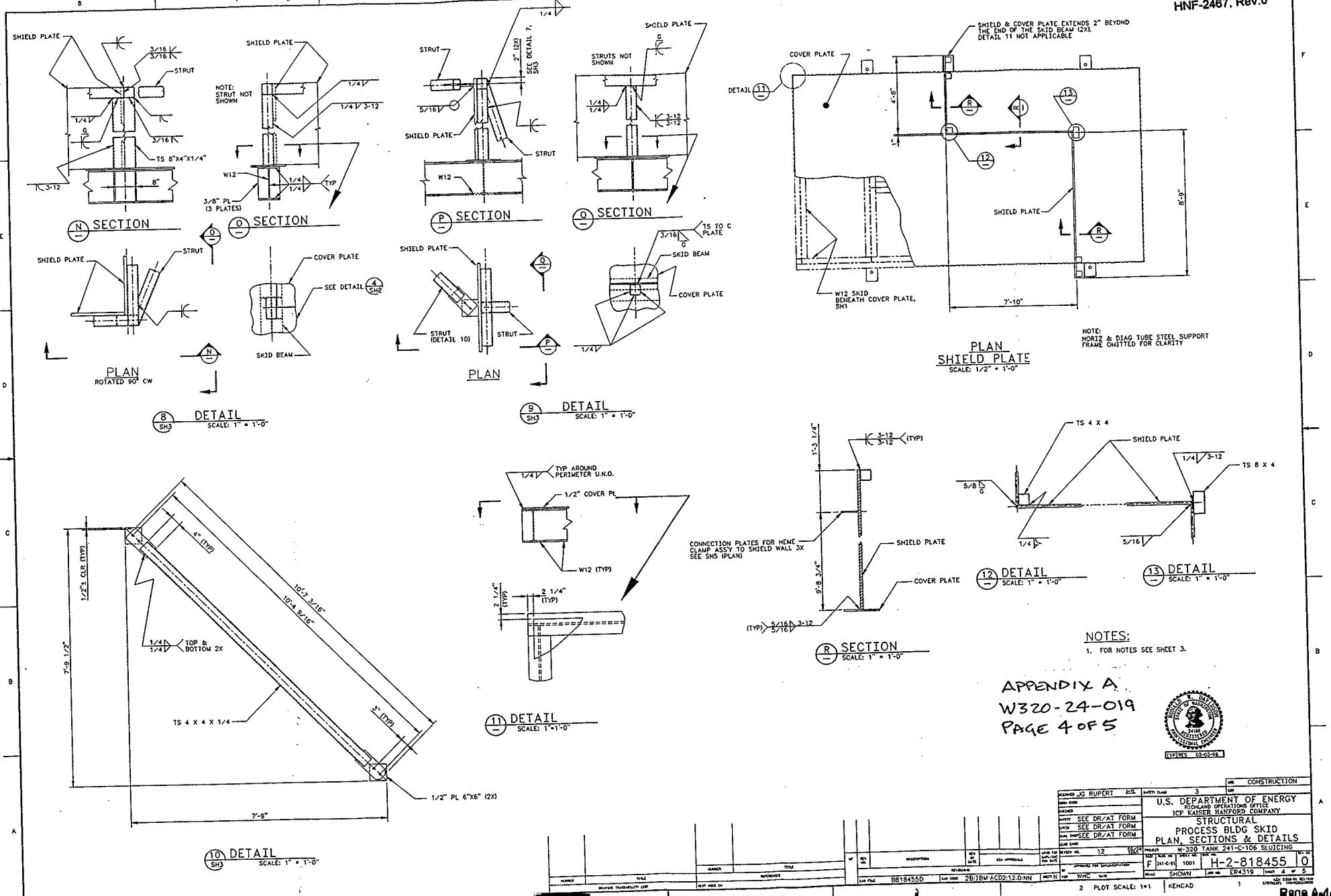

NOTES:

1. FOR NOTES SEE SHEET 3.

APPENDIX A
W320-24-019
PAGE 4 OF 5

EXPIRES 03-03-96

DESIGNED JG RUPERT	CONSTRUCTION
SAFETY CLASS 3	U.S. DEPARTMENT OF ENERGY RICHLAND OPERATIONS OFFICE ICF KAISER HANFORD COMPANY
SAFETY SEE DR/AT FORM	STRUCTURAL PROCESS BLDG SKID PLAN, SECTIONS & DETAILS
DATA SEE DR/AT FORM	
DWG SEE DR/AT FORM	
REVIEW NO. 12	PROJECT W-320 TANK 241-C-106 SLUICING
	SIZE F · SCALE 241-C-91 · SHEET NO. 1001 · DWG NO. H-2-818455 · REV NO. 0
	SCALE SHOWN · JOB NO. ER4319 · SHEET 4 OF 5
CAD FILE B818455D · CAD CODE 2B:IBM:ACD2:12.0:NN · SHEET N	

2 PLOT SCALE: 1=1 · KEHCAD

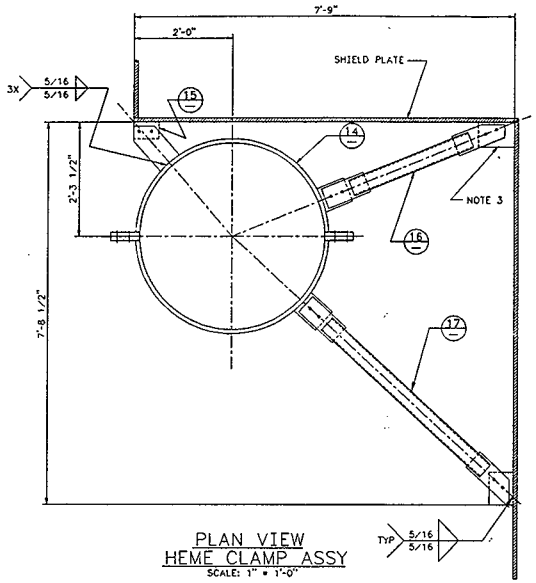

PLAN VIEW
HEME CLAMP ASSY
SCALE: 1" = 1'-0"

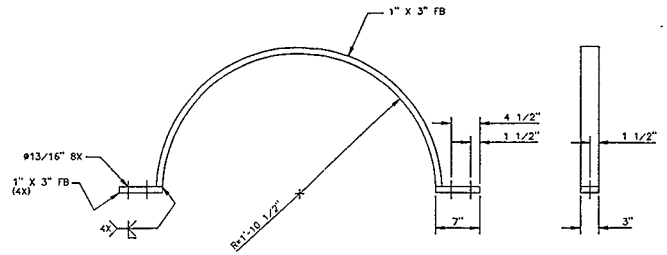

14 DETAIL
SCALE: 1 1/2" = 1'-0"
(2 REQUIRED)

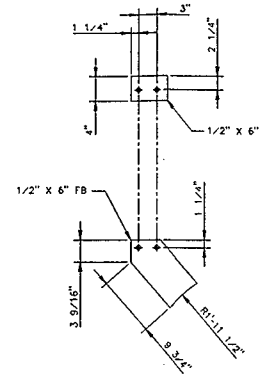

15 DETAIL
SCALE:1 1/2" = 1'-0"

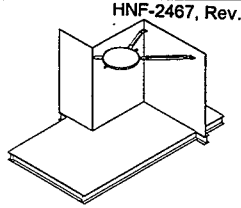

3-D VIEW NE
SCALE: 3/16" = 1-0"

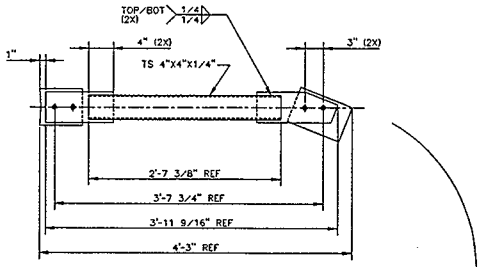

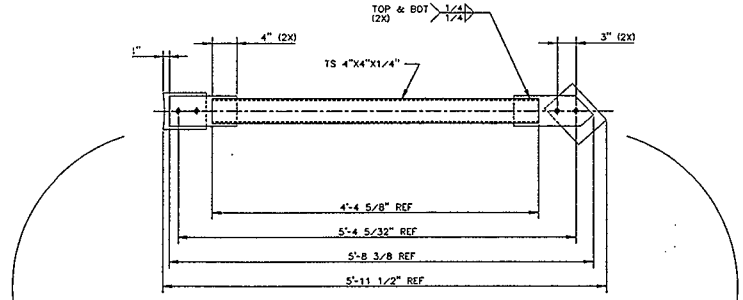

NOTES:

1. FOR ADDITIONAL NOTES, SEE SHEET 3.
2. FOR TYPICAL ELEVATION OF CLAMP ASSEMBLY CONNECTION PLATES TO SHIELD PLATE SEE SHEET 4 (SECTION R).
3. VERIFY BRACE LENGTHS AND LOCATIONS WITH VENDOR DRAWINGS PRIOR TO BRACE FABRICATION AND FIT-UP.

APPENDIX A
W320-24-019
PAGE 5 OF 5

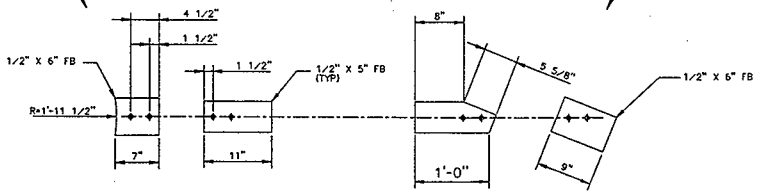

16 DETAIL
SCALE: 1 1/2" = 1'-0"

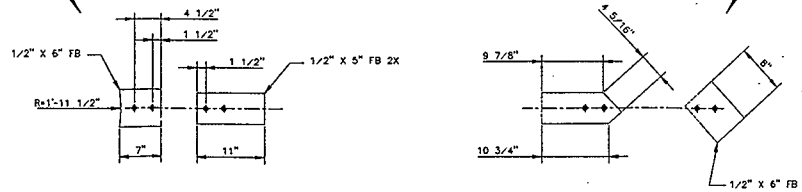

17 DETAIL
SCALE: 1 1/2" = 1'-0"

[TYP]RKS 03-03-96

PLANNER JG RUPERT	DATE	SHEET CLASS 3	USE CONSTRUCTION
DRAWN BY			DIV
CHECKED			U.S. DEPARTMENT OF ENERGY RICHLAND OPERATIONS OFFICE
SAFETY SEE DR/AT FORM			ICP KAISER HANFORD COMPANY
LAYOUT SEE DR/AT FORM			STRUCTURAL
DWG CHECK SEE DR/AT FORM			PROCESS BLDG SKID
LEAD CHECK			PLAN & DETAILS
REVISION NO. 11	03-24-97	PROJECT	W-320 TANK 241-C-106 SLUICING
		SUBT F	SYS 241-C-91 / SUBSYS NO. 1001 / UNIT NO. H-2-818455 / REV NO. 0
		SCALE SHOWN	JOB NO. ER4319 / SHEET 5 OF 5

NUMBER	TITLE	NUMBER	TITLE	NO	REV NO.	DESCRIPTION	REV DATE
DRAWING TRACEABILITY LIST		NOT USED ON	REFERENCES			REVISIONS	

B818455E	2B:IBM:ACD2:12.0:NN	SHEET N	FOR WHC DATE

PLOT SCALE: 1=1 KEMCAD

========== I M A G E S 3 D ==========
= Copyright (c) 1984 Celestial Software Inc. =
==========

CHECK GEOMETRY Version 2.0 07/01/90

L

MATERIAL PROPERTIES

Material No	Modulus of Elasticity	Weight Density	Coeff of Thermal Exp.	Poisson's Ratio	Shear Web Modulus
1	3.00000E+07	2.83000E-01	0.00000E+00	3.00E-01	1.12000E+07

NODE COORDINATES

Node	X-Coord.	Y-Coord.	Z-Coord.
1	0.00000E+00	0.00000E+00	1.94000E+02
2	0.00000E+00	0.00000E+00	1.39000E+02
3	1.36667E+01	0.00000E+00	1.39000E+02
4	2.73333E+01	0.00000E+00	1.39000E+02
5	4.10000E+01	0.00000E+00	1.39000E+02
6	4.10000E+01	0.00000E+00	1.23500E+02
7	4.10000E+01	0.00000E+00	1.08000E+02
8	4.10000E+01	0.00000E+00	9.25000E+01
9	4.10000E+01	0.00000E+00	7.70000E+01
10	4.10000E+01	0.00000E+00	6.15000E+01
11	4.10000E+01	0.00000E+00	4.60000E+01
12	5.61667E+01	0.00000E+00	4.60000E+01
13	7.13333E+01	0.00000E+00	4.60000E+01
14	8.65000E+01	0.00000E+00	4.60000E+01
15	1.01667E+02	0.00000E+00	4.60000E+01
16	1.16833E+02	0.00000E+00	4.60000E+01
17	1.32000E+02	0.00000E+00	4.60000E+01
18	1.32000E+02	0.00000E+00	0.00000E+00
19	0.00000E+00	2.20000E+01	1.39000E+02
20	1.36667E+01	2.20000E+01	1.39000E+02
21	2.73333E+01	2.20000E+01	1.39000E+02
22	4.10000E+01	2.20000E+01	1.39000E+02
23	4.10000E+01	2.20000E+01	1.23500E+02
24	4.10000E+01	2.20000E+01	1.08000E+02
25	4.10000E+01	2.20000E+01	9.25000E+01
26	4.10000E+01	2.20000E+01	7.70000E+01
27	4.10000E+01	2.20000E+01	6.15000E+01
28	4.10000E+01	2.20000E+01	4.60000E+01
29	5.61667E+01	2.20000E+01	4.60000E+01
30	7.13333E+01	2.20000E+01	4.60000E+01

========== I M A G E S 3 D ==========
= Copyright (c) 1984 Celestial Software Inc. =
==========

CHECK GEOMETRY Version 2.0 07/01/90

L

Node	X-Coord.	Y-Coord.	Z-Coord.
31	8.65000E+01	2.20000E+01	4.60000E+01
32	1.01667E+02	2.20000E+01	4.60000E+01
33	1.16833E+02	2.20000E+01	4.60000E+01
34	1.32000E+02	2.20000E+01	4.60000E+01
35	0.00000E+00	4.40000E+01	1.39000E+02
36	1.36667E+01	4.40000E+01	1.39000E+02
37	2.73333E+01	4.40000E+01	1.39000E+02
38	4.10000E+01	4.40000E+01	1.39000E+02
39	4.10000E+01	4.40000E+01	1.23500E+02
40	4.10000E+01	4.40000E+01	1.08000E+02
41	4.10000E+01	4.40000E+01	9.25000E+01
42	4.10000E+01	4.40000E+01	7.70000E+01
43	4.10000E+01	4.40000E+01	6.15000E+01
44	4.10000E+01	4.40000E+01	4.60000E+01
45	5.61667E+01	4.40000E+01	4.60000E+01
46	7.13333E+01	4.40000E+01	4.60000E+01
47	8.65000E+01	4.40000E+01	4.60000E+01
48	1.01667E+02	4.40000E+01	4.60000E+01
49	1.16833E+02	4.40000E+01	4.60000E+01
50	1.32000E+02	4.40000E+01	4.60000E+01
51	0.00000E+00	6.60000E+01	1.39000E+02
52	1.36667E+01	6.60000E+01	1.39000E+02
53	2.73333E+01	6.60000E+01	1.39000E+02
54	4.10000E+01	6.60000E+01	1.39000E+02
55	4.10000E+01	6.60000E+01	1.23500E+02
56	4.10000E+01	6.60000E+01	1.08000E+02
57	4.10000E+01	6.60000E+01	9.25000E+01
58	4.10000E+01	6.60000E+01	7.70000E+01
59	4.10000E+01	6.60000E+01	6.15000E+01
60	4.10000E+01	6.60000E+01	4.60000E+01
61	5.61667E+01	6.60000E+01	4.60000E+01
62	7.13333E+01	6.60000E+01	4.60000E+01
63	8.65000E+01	6.60000E+01	4.60000E+01
64	1.01667E+02	6.60000E+01	4.60000E+01
65	1.16833E+02	6.60000E+01	4.60000E+01
66	1.32000E+02	6.60000E+01	4.60000E+01
67	0.00000E+00	8.80000E+01	1.39000E+02
68	1.36667E+01	8.80000E+01	1.39000E+02
69	2.73333E+01	8.80000E+01	1.39000E+02
70	4.10000E+01	8.80000E+01	1.39000E+02
71	4.10000E+01	8.80000E+01	1.23500E+02
72	4.10000E+01	8.80000E+01	1.08000E+02

========== I M A G E S 3 D ==========
= Copyright (c) 1984 Celestial Software Inc. =
==========

CHECK GEOMETRY Version 2.0 07/01/90

L

Node	X-Coord.	Y-Coord.	Z-Coord.
73	4.10000E+01	8.80000E+01	9.25000E+01
74	4.10000E+01	8.80000E+01	7.70000E+01
75	4.10000E+01	8.80000E+01	6.15000E+01
76	4.10000E+01	8.80000E+01	4.60000E+01
77	5.61667E+01	8.80000E+01	4.60000E+01
78	7.13333E+01	8.80000E+01	4.60000E+01
79	8.65000E+01	8.80000E+01	4.60000E+01
80	1.01667E+02	8.80000E+01	4.60000E+01
81	1.16833E+02	8.80000E+01	4.60000E+01
82	1.32000E+02	8.80000E+01	4.60000E+01
83	0.00000E+00	1.15500E+02	1.39000E+02
84	1.36667E+01	1.15500E+02	1.39000E+02
85	2.73333E+01	1.15500E+02	1.39000E+02
86	4.10000E+01	1.15500E+02	1.39000E+02
87	4.10000E+01	1.15500E+02	1.23500E+02
88	4.10000E+01	1.15500E+02	1.08000E+02
89	4.10000E+01	1.15500E+02	9.25000E+01
90	4.10000E+01	1.15500E+02	7.70000E+01
91	4.10000E+01	1.15500E+02	6.15000E+01
92	4.10000E+01	1.15500E+02	4.60000E+01
93	5.61667E+01	1.15500E+02	4.60000E+01
94	7.13333E+01	1.15500E+02	4.60000E+01
95	8.65000E+01	1.15500E+02	4.60000E+01
96	1.01667E+02	1.15500E+02	4.60000E+01
97	1.16833E+02	1.15500E+02	4.60000E+01
98	1.32000E+02	1.15500E+02	4.60000E+01
99	0.00000E+00	1.32000E+02	1.39000E+02
100	1.36667E+01	1.32000E+02	1.39000E+02
101	2.73333E+01	1.32000E+02	1.39000E+02
102	4.10000E+01	1.32000E+02	1.39000E+02
103	4.10000E+01	1.32000E+02	1.23500E+02
104	4.10000E+01	1.32000E+02	1.08000E+02
105	4.10000E+01	1.32000E+02	9.25000E+01
106	4.10000E+01	1.32000E+02	7.70000E+01
107	4.10000E+01	1.32000E+02	6.15000E+01
108	4.10000E+01	1.32000E+02	4.60000E+01
109	5.61667E+01	1.32000E+02	4.60000E+01
110	7.13333E+01	1.32000E+02	4.60000E+01
111	8.65000E+01	1.32000E+02	4.60000E+01
112	1.01667E+02	1.32000E+02	4.60000E+01
113	1.16833E+02	1.32000E+02	4.60000E+01
114	1.32000E+02	1.32000E+02	4.60000E+01

========== I M A G E S 3 D ==========
= Copyright (c) 1984 Celestial Software Inc. =
==========

CHECK GEOMETRY Version 2.0 07/01/90

L

Node	X-Coord.	Y-Coord.	Z-Coord.
115	6.90000E+01	1.15500E+02	1.18000E+02
116	4.80000E+01	0.00000E+00	1.18000E+02
117	6.90000E+01	0.00000E+00	9.70000E+01
118	9.00000E+01	0.00000E+00	1.18000E+02
119	6.90000E+01	0.00000E+00	1.39000E+02
120	6.90000E+01	6.25000E+01	1.18000E+02
121	6.90000E+01	0.00000E+00	1.18000E+02
122	-2.00000E+01	0.00000E+00	1.39000E+02
123	1.52000E+02	0.00000E+00	4.60000E+01
124	-2.00000E+01	2.20000E+01	1.39000E+02
125	1.52000E+02	2.20000E+01	4.60000E+01
126	-2.00000E+01	4.40000E+01	1.39000E+02
127	1.52000E+02	4.40000E+01	4.60000E+01
128	-2.00000E+01	6.60000E+01	1.39000E+02
129	1.52000E+02	6.60000E+01	4.60000E+01
130	-2.00000E+01	8.80000E+01	1.39000E+02
131	1.52000E+02	8.80000E+01	4.60000E+01
132	-2.00000E+01	1.15500E+02	1.39000E+02
133	1.52000E+02	1.15500E+02	4.60000E+01
134	-2.00000E+01	1.32000E+02	1.39000E+02
135	1.52000E+02	1.32000E+02	4.60000E+01

BEAM PROPERTIES

Multiplier = 1 (For AISC database properties only)

Prop No	X-Section Area	Moment of Inertia Iy	/ Iz	Torsional Const.- J
1	3.590E+00	8.220E+00	8.220E+00	1.318E+01
2	5.590E+00	4.510E+01	1.530E+01	3.672E+01
3	3.520E+01	8.798E+03	8.798E+03	1.760E+04

Prop No	Max. Fiber Dist Cy	/ Cz	Shear Shape Fact SSFy	/ SSFz	Ctors	Shear Stress Factor SSTRFy	/ SSTRFz
1	2.00E+00	2.00E+00	2.00E+00	2.00E+00	1.00E+00	2.00E+00	2.00E+00
2	2.00E+00	4.00E+00	3.11E+00	2.80E+00	1.00E+00	3.11E+00	2.80E+00
3	2.24E+01	2.24E+01	2.00E+00	2.00E+00	1.00E+00	2.00E+00	2.00E+00

========== I M A G E S 3 D ==========
= Copyright (c) 1984 Celestial Software Inc. =
==========

CHECK GEOMETRY Version 2.0 07/01/90

L

BEAM CONNECTIVITY

Beam No	Nodes From/	To /	Ref	Prop No	Mat No	pincodes I /	J	Rigid End Offset I /	J	Length	Beam Type
1	1	99	2	1	1			0.00E+00	0.00E+00	0.14E+03	Beam
2	18	114	17	1	1			0.00E+00	0.00E+00	0.14E+03	Beam
3	99	108	92	1	1			0.00E+00	0.00E+00	0.10E+03	Beam
4	114	102	86	1	1			0.00E+00	0.00E+00	0.13E+03	Beam
5	98	115	120	1	1			0.00E+00	0.00E+00	0.96E+02	Beam
6	92	115	120	1	1			0.00E+00	0.00E+00	0.77E+02	Beam
7	86	115	120	1	1			0.00E+00	0.00E+00	0.35E+02	Beam
8	134	99	2	1	1			0.00E+00	0.00E+00	0.20E+02	Beam
9	135	114	17	1	1			0.00E+00	0.00E+00	0.20E+02	Beam
10	122	124	19	1	1			0.00E+00	0.00E+00	0.22E+02	Beam
11	124	126	35	1	1			0.00E+00	0.00E+00	0.22E+02	Beam
12	126	128	51	1	1			0.00E+00	0.00E+00	0.22E+02	Beam
13	128	130	67	1	1			0.00E+00	0.00E+00	0.22E+02	Beam
14	130	132	83	1	1			0.00E+00	0.00E+00	0.28E+02	Beam
15	132	134	99	1	1	NA	NA	NA	NA	0.17E+02	Truss
16	123	125	34	1	1			0.00E+00	0.00E+00	0.22E+02	Beam
17	2	19	20	1	1			0.00E+00	0.00E+00	0.22E+02	Beam
18	19	35	36	1	1			0.00E+00	0.00E+00	0.22E+02	Beam
19	35	51	52	1	1			0.00E+00	0.00E+00	0.22E+02	Beam
20	51	67	68	1	1			0.00E+00	0.00E+00	0.22E+02	Beam
21	67	83	84	1	1			0.00E+00	0.00E+00	0.28E+02	Beam
22	83	99	102	1	1			0.00E+00	0.00E+00	0.17E+02	Beam
23	5	22	21	1	1			0.00E+00	0.00E+00	0.22E+02	Beam
24	22	38	37	1	1			0.00E+00	0.00E+00	0.22E+02	Beam
25	38	54	53	1	1			0.00E+00	0.00E+00	0.22E+02	Beam
26	54	70	69	1	1			0.00E+00	0.00E+00	0.22E+02	Beam
27	70	86	85	1	1			0.00E+00	0.00E+00	0.28E+02	Beam
28	86	102	99	1	1			0.00E+00	0.00E+00	0.17E+02	Beam
29	11	28	27	2	1			0.00E+00	0.00E+00	0.22E+02	Beam
30	28	44	43	2	1			0.00E+00	0.00E+00	0.22E+02	Beam
31	44	60	59	2	1			0.00E+00	0.00E+00	0.22E+02	Beam
32	60	76	75	2	1			0.00E+00	0.00E+00	0.22E+02	Beam
33	76	92	91	2	1			0.00E+00	0.00E+00	0.28E+02	Beam
34	92	108	102	2	1			0.00E+00	0.00E+00	0.17E+02	Beam
35	17	34	33	1	1			0.00E+00	0.00E+00	0.22E+02	Beam
36	34	50	49	1	1			0.00E+00	0.00E+00	0.22E+02	Beam
37	50	66	65	1	1			0.00E+00	0.00E+00	0.22E+02	Beam
38	66	82	81	1	1			0.00E+00	0.00E+00	0.22E+02	Beam
39	82	98	97	1	1			0.00E+00	0.00E+00	0.28E+02	Beam
40	98	114	113	1	1			0.00E+00	0.00E+00	0.17E+02	Beam
41	99	100	84	1	1			0.00E+00	0.00E+00	0.14E+02	Beam
42	100	101	85	1	1			0.00E+00	0.00E+00	0.14E+02	Beam
43	101	102	86	1	1			0.00E+00	0.00E+00	0.14E+02	Beam

========== I M A G E S 3 D ==========
= Copyright (c) 1984 Celestial Software Inc. =
==========

CHECK GEOMETRY Version 2.0 07/01/90

L

Beam No	Nodes From/	To /	Ref	Prop No	Mat No	pincodes I /	J	Rigid End Offset I /	J	Length	Beam Type
44	102	103	87	1	1			0.00E+00	0.00E+00	0.16E+02	Beam
45	103	104	88	1	1			0.00E+00	0.00E+00	0.16E+02	Beam
46	104	105	89	1	1			0.00E+00	0.00E+00	0.16E+02	Beam
47	105	106	90	1	1			0.00E+00	0.00E+00	0.16E+02	Beam
48	106	107	91	1	1			0.00E+00	0.00E+00	0.16E+02	Beam
49	107	108	92	1	1			0.00E+00	0.00E+00	0.16E+02	Beam
50	108	109	93	1	1			0.00E+00	0.00E+00	0.15E+02	Beam
51	109	110	94	1	1			0.00E+00	0.00E+00	0.15E+02	Beam
52	110	111	95	1	1			0.00E+00	0.00E+00	0.15E+02	Beam
53	111	112	96	1	1			0.00E+00	0.00E+00	0.15E+02	Beam
54	112	113	97	1	1			0.00E+00	0.00E+00	0.15E+02	Beam
55	113	114	98	1	1			0.00E+00	0.00E+00	0.15E+02	Beam
56	115	120	92	3	1			0.00E+00	0.00E+00	0.53E+02	Beam
57	120	121	92	3	1			0.00E+00	0.00E+00	0.63E+02	Beam
58	116	121	115	3	1			0.00E+00	0.00E+00	0.21E+02	Beam
59	117	121	115	3	1			0.00E+00	0.00E+00	0.21E+02	Beam
60	118	121	115	3	1			0.00E+00	0.00E+00	0.21E+02	Beam
61	119	121	115	3	1			0.00E+00	0.00E+00	0.21E+02	Beam
62	125	127	50	1	1			0.00E+00	0.00E+00	0.22E+02	Beam
63	127	129	66	1	1			0.00E+00	0.00E+00	0.22E+02	Beam
64	129	131	82	1	1			0.00E+00	0.00E+00	0.22E+02	Beam
65	131	133	98	1	1			0.00E+00	0.00E+00	0.28E+02	Beam
66	133	135	114	1	1			0.00E+00	0.00E+00	0.17E+02	Beam
67	115	116	121	3	1			0.00E+00	0.00E+00	0.12E+03	Beam
68	115	117	121	3	1			0.00E+00	0.00E+00	0.12E+03	Beam
69	115	118	121	3	1			0.00E+00	0.00E+00	0.12E+03	Beam
70	115	119	121	3	1			0.00E+00	0.00E+00	0.12E+03	Beam

PLATE ELEMENT CONNECTIVITY

	Plate No.	Nodes I	J	K	L	Mat No.	Thickness	Area	Shear Web Thickness	Aspect Ratio	Plate Type
QUAD	1	2	3	20	19	1	1.000E+00	3.007E+02		6.212E-01	M+B
QUAD	2	3	4	21	20	1	1.000E+00	3.007E+02		6.212E-01	M+B
QUAD	3	4	5	22	21	1	1.000E+00	3.007E+02		6.212E-01	M+B
QUAD	4	5	6	23	22	1	1.000E+00	3.410E+02		7.045E-01	M+B
QUAD	5	6	7	24	23	1	1.000E+00	3.410E+02		7.045E-01	M+B

KCA4PRINT

========== I M A G E S 3 D ==========
= Copyright (c) 1984 Celestial Software Inc. =
==========

CHECK GEOMETRY Version 2.0 07/01/90

L

	Plate No.	Nodes I	J	K	L	Mat No.	Thickness	Area	Shear Web Thickness	Aspect Ratio	Plate Type
QUAD	6	7	8	25	24	1	1.000E+00	3.410E+02		7.045E-01	M+B
QUAD	7	8	9	26	25	1	1.000E+00	3.410E+02		7.045E-01	M+B
QUAD	8	9	10	27	26	1	1.000E+00	3.410E+02		7.045E-01	M+B
QUAD	9	10	11	28	27	1	1.000E+00	3.410E+02		7.045E-01	M+B
QUAD	10	11	12	29	28	1	1.000E+00	3.337E+02		6.894E-01	M+B
QUAD	11	12	13	30	29	1	1.000E+00	3.337E+02		6.894E-01	M+B
QUAD	12	13	14	31	30	1	1.000E+00	3.337E+02		6.894E-01	M+B
QUAD	13	14	15	32	31	1	1.000E+00	3.337E+02		6.894E-01	M+B
QUAD	14	15	16	33	32	1	1.000E+00	3.337E+02		6.894E-01	M+B
QUAD	15	16	17	34	33	1	1.000E+00	3.337E+02		6.894E-01	M+B
QUAD	16	19	20	36	35	1	1.000E+00	3.007E+02		6.212E-01	M+B
QUAD	17	20	21	37	36	1	1.000E+00	3.007E+02		6.212E-01	M+B
QUAD	18	21	22	38	37	1	1.000E+00	3.007E+02		6.212E-01	M+B
QUAD	19	22	23	39	38	1	1.000E+00	3.410E+02		7.045E-01	M+B
QUAD	20	23	24	40	39	1	1.000E+00	3.410E+02		7.045E-01	M+B
QUAD	21	24	25	41	40	1	1.000E+00	3.410E+02		7.045E-01	M+B
QUAD	22	25	26	42	41	1	1.000E+00	3.410E+02		7.045E-01	M+B
QUAD	23	26	27	43	42	1	1.000E+00	3.410E+02		7.045E-01	M+B
QUAD	24	27	28	44	43	1	1.000E+00	3.410E+02		7.045E-01	M+B
QUAD	25	28	29	45	44	1	1.000E+00	3.337E+02		6.894E-01	M+B
QUAD	26	29	30	46	45	1	1.000E+00	3.337E+02		6.894E-01	M+B
QUAD	27	30	31	47	46	1	1.000E+00	3.337E+02		6.894E-01	M+B
QUAD	28	31	32	48	47	1	1.000E+00	3.337E+02		6.894E-01	M+B
QUAD	29	32	33	49	48	1	1.000E+00	3.337E+02		6.894E-01	M+B
QUAD	30	33	34	50	49	1	1.000E+00	3.337E+02		6.894E-01	M+B
QUAD	31	35	36	52	51	1	1.000E+00	3.007E+02		6.212E-01	M+B
QUAD	32	36	37	53	52	1	1.000E+00	3.007E+02		6.212E-01	M+B
QUAD	33	37	38	54	53	1	1.000E+00	3.007E+02		6.212E-01	M+B
QUAD	34	38	39	55	54	1	1.000E+00	3.410E+02		7.045E-01	M+B
QUAD	35	39	40	56	55	1	1.000E+00	3.410E+02		7.045E-01	M+B
QUAD	36	40	41	57	56	1	1.000E+00	3.410E+02		7.045E-01	M+B
QUAD	37	41	42	58	57	1	1.000E+00	3.410E+02		7.045E-01	M+B
QUAD	38	42	43	59	58	1	1.000E+00	3.410E+02		7.045E-01	M+B
QUAD	39	43	44	60	59	1	1.000E+00	3.410E+02		7.045E-01	M+B
QUAD	40	44	45	61	60	1	1.000E+00	3.337E+02		6.894E-01	M+B
QUAD	41	45	46	62	61	1	1.000E+00	3.337E+02		6.894E-01	M+B
QUAD	42	46	47	63	62	1	1.000E+00	3.337E+02		6.894E-01	M+B
QUAD	43	47	48	64	63	1	1.000E+00	3.337E+02		6.894E-01	M+B
QUAD	44	48	49	65	64	1	1.000E+00	3.337E+02		6.894E-01	M+B
QUAD	45	49	50	66	65	1	1.000E+00	3.337E+02		6.894E-01	M+B
QUAD	46	51	52	68	67	1	1.000E+00	3.007E+02		6.212E-01	M+B

========== I M A G E S 3 D ==========
= Copyright (c) 1984 Celestial Software Inc. =
==========

CHECK GEOMETRY Version 2.0 07/01/90

L

	Plate No.	Nodes I	J	K	L	Mat No.	Thickness	Area	Shear Web Thickness	Aspect Ratio	Plate Type
QUAD	47	52	53	69	68	1	1.000E+00	3.007E+02		6.212E-01	M+B
QUAD	48	53	54	70	69	1	1.000E+00	3.007E+02		6.212E-01	M+B
QUAD	49	54	55	71	70	1	1.000E+00	3.410E+02		7.045E-01	M+B
QUAD	50	55	56	72	71	1	1.000E+00	3.410E+02		7.045E-01	M+B
QUAD	51	56	57	73	72	1	1.000E+00	3.410E+02		7.045E-01	M+B
QUAD	52	57	58	74	73	1	1.000E+00	3.410E+02		7.045E-01	M+B
QUAD	53	58	59	75	74	1	1.000E+00	3.410E+02		7.045E-01	M+B
QUAD	54	59	60	76	75	1	1.000E+00	3.410E+02		7.045E-01	M+B
QUAD	55	60	61	77	76	1	1.000E+00	3.337E+02		6.894E-01	M+B
QUAD	56	61	62	78	77	1	1.000E+00	3.337E+02		6.894E-01	M+B
QUAD	57	62	63	79	78	1	1.000E+00	3.337E+02		6.894E-01	M+B
QUAD	58	63	64	80	79	1	1.000E+00	3.337E+02		6.894E-01	M+B
QUAD	59	64	65	81	80	1	1.000E+00	3.337E+02		6.894E-01	M+B
QUAD	60	65	66	82	81	1	1.000E+00	3.337E+02		6.894E-01	M+B
QUAD	61	67	68	84	83	1	1.000E+00	3.758E+02		4.970E-01	M+B
QUAD	62	68	69	85	84	1	1.000E+00	3.758E+02		4.970E-01	M+B
QUAD	63	69	70	86	85	1	1.000E+00	3.758E+02		4.970E-01	M+B
QUAD	64	70	71	87	86	1	1.000E+00	4.263E+02		5.636E-01	M+B
QUAD	65	71	72	88	87	1	1.000E+00	4.263E+02		5.636E-01	M+B
QUAD	66	72	73	89	88	1	1.000E+00	4.263E+02		5.636E-01	M+B
QUAD	67	73	74	90	89	1	1.000E+00	4.263E+02		5.636E-01	M+B
QUAD	68	74	75	91	90	1	1.000E+00	4.263E+02		5.636E-01	M+B
QUAD	69	75	76	92	91	1	1.000E+00	4.263E+02		5.636E-01	M+B
QUAD	70	76	77	93	92	1	1.000E+00	4.171E+02		5.515E-01	M+B
QUAD	71	77	78	94	93	1	1.000E+00	4.171E+02		5.515E-01	M+B
QUAD	72	78	79	95	94	1	1.000E+00	4.171E+02		5.515E-01	M+B
QUAD	73	79	80	96	95	1	1.000E+00	4.171E+02		5.515E-01	M+B
QUAD	74	80	81	97	96	1	1.000E+00	4.171E+02		5.515E-01	M+B
QUAD	75	81	82	98	97	1	1.000E+00	4.171E+02		5.515E-01	M+B
QUAD	76	83	84	100	99	1	1.000E+00	2.255E+02		8.283E-01	M+B
QUAD	77	84	85	101	100	1	1.000E+00	2.255E+02		8.283E-01	M+B
QUAD	78	85	86	102	101	1	1.000E+00	2.255E+02		8.283E-01	M+B
QUAD	79	86	87	103	102	1	1.000E+00	2.558E+02		9.394E-01	M+B
QUAD	80	87	88	104	103	1	1.000E+00	2.558E+02		9.394E-01	M+B
QUAD	81	88	89	105	104	1	1.000E+00	2.558E+02		9.394E-01	M+B
QUAD	82	89	90	106	105	1	1.000E+00	2.558E+02		9.394E-01	M+B
QUAD	83	90	91	107	106	1	1.000E+00	2.558E+02		9.394E-01	M+B
QUAD	84	91	92	108	107	1	1.000E+00	2.558E+02		9.394E-01	M+B
QUAD	85	92	93	109	108	1	1.000E+00	2.503E+02		9.192E-01	M+B
QUAD	86	93	94	110	109	1	1.000E+00	2.503E+02		9.192E-01	M+B
QUAD	87	94	95	111	110	1	1.000E+00	2.502E+02		9.192E-01	M+B

KAISER ENGINEERS HANFORD S/N:801854 02/22/95
PAGE 9 RUN ID=MN61973 08:47:50

```
================ I M A G E S  3 D ================
= Copyright (c) 1984   Celestial Software Inc. =
==================================================
```

CHECK GEOMETRY Version 2.0 07/01/90

L

Plate	No.	Nodes I	J	K	L	Mat No.	Thickness	Area	Shear Web Thickness	Aspect Ratio	Plate Type
QUAD	88	95	96	112	111	1	1.000E+00	2.503E+02		9.192E-01	M+B
QUAD	89	96	97	113	112	1	1.000E+00	2.502E+02		9.192E-01	M+B
QUAD	90	97	98	114	113	1	1.000E+00	2.503E+02		9.192E-01	M+B
QUAD	91	122	2	19	124	1	1.000E+00	4.400E+02		9.091E-01	M+B
QUAD	92	124	19	35	126	1	1.000E+00	4.400E+02		9.091E-01	M+B
QUAD	93	126	35	51	128	1	1.000E+00	4.400E+02		9.091E-01	M+B
QUAD	94	128	51	67	130	1	1.000E+00	4.400E+02		9.091E-01	M+B
QUAD	95	130	67	83	132	1	1.000E+00	5.500E+02		7.273E-01	M+B
QUAD	96	132	83	99	134	1	1.000E+00	3.300E+02		1.212E+00	M+B
QUAD	97	17	123	125	34	1	1.000E+00	4.400E+02		9.091E-01	M+B
QUAD	98	34	125	127	50	1	1.000E+00	4.400E+02		9.091E-01	M+B
QUAD	99	50	127	129	66	1	1.000E+00	4.400E+02		9.091E-01	M+B
QUAD	100	66	129	131	82	1	1.000E+00	4.400E+02		9.091E-01	M+B
QUAD	101	82	131	133	98	1	1.000E+00	5.500E+02		7.273E-01	M+B
QUAD	102	98	133	135	114	1	1.000E+00	3.300E+02		1.212E+00	M+B

RESTRAINTS

Node No	Global/Local	Restraint Directions
1	GLOBAL	X Y Z - - -
2	GLOBAL	X Y Z - RY RZ
3	GLOBAL	X Y Z - RY RZ
4	GLOBAL	X Y Z - RY RZ
5	GLOBAL	X Y Z RX RY RZ
6	GLOBAL	X Y Z RX RY -
7	GLOBAL	X Y Z RX RY -
8	GLOBAL	X Y Z RX RY -
9	GLOBAL	X Y Z RX RY -
10	GLOBAL	X Y Z RX RY -
11	GLOBAL	X Y Z RX RY RZ
12	GLOBAL	X Y Z - RY RZ
13	GLOBAL	X Y Z - RY RZ
14	GLOBAL	X Y Z - RY RZ
15	GLOBAL	X Y Z - RY RZ
16	GLOBAL	X Y Z - RY RZ
17	GLOBAL	X Y Z - RY RZ
18	GLOBAL	X Y Z - - -
115	GLOBAL	X - Z - - -

KAISER ENGINEERS HANFORD S/N:801854 02/22/95
PAGE 10 RUN ID=MN61973 08:47:50

```
================ I M A G E S  3 D ================
= Copyright (c) 1984   Celestial Software Inc. =
==================================================
```

CHECK GEOMETRY Version 2.0 07/01/90

L

Node No	Global/Local	Restraint Directions
116	GLOBAL	X Y Z - - -
117	GLOBAL	X Y Z - - -
118	GLOBAL	X Y Z - - -
119	GLOBAL	X Y Z - - -
122	GLOBAL	X Y Z - RY RZ
123	GLOBAL	X Y Z - RY RZ

KAISER ENGINEERS HANFORD S/N:801854 02/22/95
PAGE 11 Run ID=MN61973 08:49:16

```
=============== I M A G E S  3 D ===============
= Copyright (c) 1984   Celestial Software Inc. =
================================================
```

SOLVE DISPLACEMENTS Version 2.0 07/01/90

L

L O A D C A S E 1

UBC SEISMIC LOAD - NS & EW DIR.

GRAVITY LOADING

Direction	Gravity Factor	Load Factor
X	.3750E+00	.1000E+01
Y	-.1000E+01	.1000E+01
Z	.3750E+00	.1000E+01

INERTIA LOADING

Direction	Translational Accel.	Rotational Accel.	Rotational Velocity	Origin
X	.0000E+00	.0000E+00	.0000E+00	.0000E+00
Y	.0000E+00	.0000E+00	.0000E+00	.0000E+00
Z	.0000E+00	.0000E+00	.0000E+00	.0000E+00

Gravity Acceleration = .3864E+03

CONCENTRATED LOADS

Node	Fx	Fy	Fz	Mx	My	Mz
120	.1125E+05	-.3000E+05	.1125E+05	.0000E+00	.0000E+00	.0000E+00

REFERENCE TEMPERATURE = .0000E+00

KAISER ENGINEERS HANFORD S/N:801854 02/22/95
PAGE 12 Run ID=MN61973 08:49:22

```
=============== I M A G E S  3 D ===============
= Copyright (c) 1984   Celestial Software Inc. =
================================================
```

SOLVE DISPLACEMENTS Version 2.0 07/01/90

L

L O A D C A S E 2

GRAVITY LOAD

GRAVITY LOADING

Direction	Gravity Factor	Load Factor
X	.0000E+00	.1000E+01
Y	-.1000E+01	.1000E+01
Z	.0000E+00	.1000E+01

INERTIA LOADING

Direction	Translational Accel.	Rotational Accel.	Rotational Velocity	Origin
X	.0000E+00	.0000E+00	.0000E+00	.0000E+00
Y	.0000E+00	.0000E+00	.0000E+00	.0000E+00
Z	.0000E+00	.0000E+00	.0000E+00	.0000E+00

Gravity Acceleration = .3864E+03

CONCENTRATED LOADS

Node	Fx	Fy	Fz	Mx	My	Mz
120	.0000E+00	-.3000E+05	.0000E+00	.0000E+00	.0000E+00	.0000E+00

REFERENCE TEMPERATURE = .0000E+00

KAISER ENGINEERS HANFORD S/N:801854 02/22/95
PAGE 13 Run ID=MN61973 08:49:27

========== I M A G E S 3 D ==========
= Copyright (c) 1984 Celestial Software Inc. =
==========

SOLVE DISPLACEMENTS Version 2.0 07/01/90

L

L O A D C A S E 3
UBC SEISMIC LOAD - SN & WE DIR.

GRAVITY LOADING

Direction	Gravity Factor	Load Factor
X	-.3750E+00	.1000E+01
Y	-.1000E+01	.1000E+01
Z	-.3750E+00	.1000E+01

INERTIA LOADING

Direction	Translational Accel.	Rotational Accel.	Rotational Velocity	Origin
X	.0000E+00	.0000E+00	.0000E+00	.0000E+00
Y	.0000E+00	.0000E+00	.0000E+00	.0000E+00
Z	.0000E+00	.0000E+00	.0000E+00	.0000E+00

Gravity Acceleration = .3864E+03

CONCENTRATED LOADS

Node	Fx	Fy	Fz	Mx	My	Mz
120	-.1125E+05	-.3000E+05	-.1125E+05	.0000E+00	.0000E+00	.0000E+00

REFERENCE TEMPERATURE = .0000E+00

KAISER ENGINEERS HANFORD S/N:801854 02/22/95
PAGE 14 Run ID=MN61973 08:49:33

========== I M A G E S 3 D ==========
= Copyright (c) 1984 Celestial Software Inc. =
==========

SOLVE DISPLACEMENTS Version 2.0 07/01/90

L

L O A D C A S E 4
UBC SEISMIC LOAD - SN & EW DIR.

GRAVITY LOADING

Direction	Gravity Factor	Load Factor
X	-.3750E+00	.1000E+01
Y	-.1000E+01	.1000E+01
Z	.3750E+00	.1000E+01

INERTIA LOADING

Direction	Translational Accel.	Rotational Accel.	Rotational Velocity	Origin
X	.0000E+00	.0000E+00	.0000E+00	.0000E+00
Y	.0000E+00	.0000E+00	.0000E+00	.0000E+00
Z	.0000E+00	.0000E+00	.0000E+00	.0000E+00

Gravity Acceleration = .3864E+03

CONCENTRATED LOADS

Node	Fx	Fy	Fz	Mx	My	Mz
120	-.1125E+05	-.3000E+05	.1125E+05	.0000E+00	.0000E+00	.0000E+00

REFERENCE TEMPERATURE = .0000E+00

========== I M A G E S 3 D ==========
= Copyright (c) 1984 Celestial Software Inc. =
==========

SOLVE DISPLACEMENTS Version 2.0 07/01/90

L

L O A D C A S E 5

UBC SEISMIC LOAD - NS & WE

GRAVITY LOADING

Direction	Gravity Factor	Load Factor
X	.3750E+00	.1000E+01
Y	-.1000E+01	.1000E+01
Z	-.3750E+00	.1000E+01

INERTIA LOADING

Direction	Translational Accel.	Rotational Accel.	Rotational Velocity	Origin
X	.0000E+00	.0000E+00	.0000E+00	.0000E+00
Y	.0000E+00	.0000E+00	.0000E+00	.0000E+00
Z	.0000E+00	.0000E+00	.0000E+00	.0000E+00

Gravity Acceleration = .3864E+03

CONCENTRATED LOADS

Node	Fx	Fy	Fz	Mx	My	Mz
120	.1125E+05	-.3000E+05	-.1125E+05	.0000E+00	.0000E+00	.0000E+00

REFERENCE TEMPERATURE = .0000E+00

========== I M A G E S 3 D ==========
= Copyright (c) 1984 Celestial Software Inc. =
==========

SOLVE DISPLACEMENTS Version 2.0 07/01/90

L

L O A D C A S E 1

UBC SEISMIC LOAD - NS & EW DIR.

APPLIED LOAD VECTOR

Node	Fx	Fy	Fz	Mx	My	Mz
1	.2724E+02	-.7264E+02	.2724E+02	-.6659E+02	-.2497E+03	-.5993E+03
2	.2384E+02	-.6358E+02	.2384E+02	.1537E+02	.0000E+00	-.1537E+02
3	.1595E+02	-.4254E+02	.1595E+02	.0000E+00	.0000E+00	.0000E+00
4	.1595E+02	-.4254E+02	.1595E+02	.0000E+00	.0000E+00	.0000E+00
5	.2122E+02	-.5657E+02	.2122E+02	.1537E+02	.0000E+00	-.1537E+02
6	.1809E+02	-.4825E+02	.1809E+02	.0000E+00	.0000E+00	.0000E+00
7	.1809E+02	-.4825E+02	.1809E+02	.0000E+00	.0000E+00	.0000E+00
8	.1809E+02	-.4825E+02	.1809E+02	.0000E+00	.0000E+00	.0000E+00
9	.1809E+02	-.4825E+02	.1809E+02	.0000E+00	.0000E+00	.0000E+00
10	.1809E+02	-.4825E+02	.1809E+02	.0000E+00	.0000E+00	.0000E+00
11	.2443E+02	-.6513E+02	.2443E+02	.2393E+02	.0000E+00	-.2393E+02
12	.1771E+02	-.4721E+02	.1771E+02	.0000E+00	.0000E+00	.0000E+00
13	.1771E+02	-.4721E+02	.1771E+02	.0000E+00	.0000E+00	.0000E+00
14	.1771E+02	-.4721E+02	.1771E+02	.0000E+00	.0000E+00	.0000E+00
15	.1771E+02	-.4721E+02	.1771E+02	.0000E+00	.0000E+00	.0000E+00
16	.1771E+02	-.4721E+02	.1771E+02	.0000E+00	.0000E+00	.0000E+00
17	.2472E+02	-.6591E+02	.2472E+02	.1537E+02	.0000E+00	-.1537E+02
18	.2663E+02	-.7101E+02	.2663E+02	.1130E+04	.2042E+03	-.5858E+03
19	.4768E+02	-.1272E+03	.4768E+02	.0000E+00	.0000E+00	.0000E+00
20	.3191E+02	-.8509E+02	.3191E+02	.0000E+00	.0000E+00	.0000E+00
21	.3191E+02	-.8509E+02	.3191E+02	.0000E+00	.0000E+00	.0000E+00
22	.4243E+02	-.1131E+03	.4243E+02	.0000E+00	.0000E+00	.0000E+00
23	.3619E+02	-.9650E+02	.3619E+02	.0000E+00	.0000E+00	.0000E+00
24	.3619E+02	-.9650E+02	.3619E+02	.0000E+00	.0000E+00	.0000E+00
25	.3619E+02	-.9650E+02	.3619E+02	.0000E+00	.0000E+00	.0000E+00
26	.3619E+02	-.9650E+02	.3619E+02	.0000E+00	.0000E+00	.0000E+00
27	.3619E+02	-.9650E+02	.3619E+02	.0000E+00	.0000E+00	.0000E+00
28	.4885E+02	-.1303E+03	.4885E+02	.0000E+00	.0000E+00	.0000E+00
29	.3541E+02	-.9443E+02	.3541E+02	.0000E+00	.0000E+00	.0000E+00
30	.3541E+02	-.9443E+02	.3541E+02	.0000E+00	.0000E+00	.0000E+00
31	.3541E+02	-.9443E+02	.3541E+02	.0000E+00	.0000E+00	.0000E+00
32	.3541E+02	-.9443E+02	.3541E+02	.0000E+00	.0000E+00	.0000E+00
33	.3541E+02	-.9443E+02	.3541E+02	.0000E+00	.0000E+00	.0000E+00
34	.4943E+02	-.1318E+03	.4943E+02	.0000E+00	.0000E+00	.0000E+00
35	.4768E+02	-.1272E+03	.4768E+02	.0000E+00	.0000E+00	.0000E+00

========== I M A G E S 3 D ==========
= Copyright (c) 1984 Celestial Software Inc. =
==========

SOLVE DISPLACEMENTS Version 2.0 07/01/90

L

L O A D C A S E 1

UBC SEISMIC LOAD - NS & EW DIR.

APPLIED LOAD VECTOR

Node	Fx	Fy	Fz	Mx	My	Mz
36	.3191E+02	-.8509E+02	.3191E+02	.0000E+00	.0000E+00	.0000E+00
37	.3191E+02	-.8509E+02	.3191E+02	.0000E+00	.0000E+00	.0000E+00
38	.4243E+02	-.1131E+03	.4243E+02	.0000E+00	.0000E+00	.0000E+00
39	.3619E+02	-.9650E+02	.3619E+02	.0000E+00	.0000E+00	.0000E+00
40	.3619E+02	-.9650E+02	.3619E+02	.0000E+00	.0000E+00	.0000E+00
41	.3619E+02	-.9650E+02	.3619E+02	.0000E+00	.0000E+00	.0000E+00
42	.3619E+02	-.9650E+02	.3619E+02	.0000E+00	.0000E+00	.0000E+00
43	.3619E+02	-.9650E+02	.3619E+02	.0000E+00	.0000E+00	.0000E+00
44	.4885E+02	-.1303E+03	.4885E+02	.0000E+00	.0000E+00	.0000E+00
45	.3541E+02	-.9443E+02	.3541E+02	.0000E+00	.0000E+00	.0000E+00
46	.3541E+02	-.9443E+02	.3541E+02	.0000E+00	.0000E+00	.0000E+00
47	.3541E+02	-.9443E+02	.3541E+02	.0000E+00	.0000E+00	.0000E+00
48	.3541E+02	-.9443E+02	.3541E+02	.0000E+00	.0000E+00	.0000E+00
49	.3541E+02	-.9443E+02	.3541E+02	.0000E+00	.0000E+00	.0000E+00
50	.4943E+02	-.1318E+03	.4943E+02	.0000E+00	.0000E+00	.0000E+00
51	.4768E+02	-.1272E+03	.4768E+02	.0000E+00	.0000E+00	.0000E+00
52	.3191E+02	-.8509E+02	.3191E+02	.0000E+00	.0000E+00	.0000E+00
53	.3191E+02	-.8509E+02	.3191E+02	.0000E+00	.0000E+00	.0000E+00
54	.4243E+02	-.1131E+03	.4243E+02	.0000E+00	.0000E+00	.0000E+00
55	.3619E+02	-.9650E+02	.3619E+02	.0000E+00	.0000E+00	.0000E+00
56	.3619E+02	-.9650E+02	.3619E+02	.0000E+00	.0000E+00	.0000E+00
57	.3619E+02	-.9650E+02	.3619E+02	.0000E+00	.0000E+00	.0000E+00
58	.3619E+02	-.9650E+02	.3619E+02	.0000E+00	.0000E+00	.0000E+00
59	.3619E+02	-.9650E+02	.3619E+02	.0000E+00	.0000E+00	.0000E+00
60	.4885E+02	-.1303E+03	.4885E+02	.0000E+00	.0000E+00	.0000E+00
61	.3541E+02	-.9443E+02	.3541E+02	.0000E+00	.0000E+00	.0000E+00
62	.3541E+02	-.9443E+02	.3541E+02	.0000E+00	.0000E+00	.0000E+00
63	.3541E+02	-.9443E+02	.3541E+02	.0000E+00	.0000E+00	.0000E+00
64	.3541E+02	-.9443E+02	.3541E+02	.0000E+00	.0000E+00	.0000E+00
65	.3541E+02	-.9443E+02	.3541E+02	.0000E+00	.0000E+00	.0000E+00
66	.4943E+02	-.1318E+03	.4943E+02	.0000E+00	.0000E+00	.0000E+00
67	.5364E+02	-.1431E+03	.5364E+02	.8644E+01	.0000E+00	-.8644E+01
68	.3590E+02	-.9572E+02	.3590E+02	.0000E+00	.0000E+00	.0000E+00
69	.3590E+02	-.9572E+02	.3590E+02	.0000E+00	.0000E+00	.0000E+00
70	.4773E+02	-.1273E+03	.4773E+02	.8644E+01	.0000E+00	-.8644E+01
71	.4071E+02	-.1086E+03	.4071E+02	.0000E+00	.0000E+00	.0000E+00
72	.4071E+02	-.1086E+03	.4071E+02	.0000E+00	.0000E+00	.0000E+00
73	.4071E+02	-.1086E+03	.4071E+02	.0000E+00	.0000E+00	.0000E+00
74	.4071E+02	-.1086E+03	.4071E+02	.0000E+00	.0000E+00	.0000E+00
75	.4071E+02	-.1086E+03	.4071E+02	.0000E+00	.0000E+00	.0000E+00

========== I M A G E S 3 D ==========
= Copyright (c) 1984 Celestial Software Inc. =
==========

SOLVE DISPLACEMENTS Version 2.0 07/01/90

L

L O A D C A S E 1

UBC SEISMIC LOAD - NS & EW DIR.

APPLIED LOAD VECTOR

Node	Fx	Fy	Fz	Mx	My	Mz
76	.5496E+02	-.1466E+03	.5496E+02	.1346E+02	.0000E+00	-.1346E+02
77	.3984E+02	-.1062E+03	.3984E+02	.0000E+00	.0000E+00	.0000E+00
78	.3984E+02	-.1062E+03	.3984E+02	.0000E+00	.0000E+00	.0000E+00
79	.3984E+02	-.1062E+03	.3984E+02	.0000E+00	.0000E+00	.0000E+00
80	.3984E+02	-.1062E+03	.3984E+02	.0000E+00	.0000E+00	.0000E+00
81	.3984E+02	-.1062E+03	.3984E+02	.0000E+00	.0000E+00	.0000E+00
82	.5561E+02	-.1483E+03	.5561E+02	.8644E+01	.0000E+00	-.8644E+01
83	.4768E+02	-.1272E+03	.4768E+02	-.1537E+02	.0000E+00	.1537E+02
84	.3191E+02	-.8509E+02	.3191E+02	.0000E+00	.0000E+00	.0000E+00
85	.3191E+02	-.8509E+02	.3191E+02	.0000E+00	.0000E+00	.0000E+00
86	.4910E+02	-.1309E+03	.4910E+02	-.7759E+02	-.5445E+02	-.6760E+02
87	.3619E+02	-.9650E+02	.3619E+02	.0000E+00	.0000E+00	.0000E+00
88	.3619E+02	-.9650E+02	.3619E+02	.0000E+00	.0000E+00	.0000E+00
89	.3619E+02	-.9650E+02	.3619E+02	.0000E+00	.0000E+00	.0000E+00
90	.3619E+02	-.9650E+02	.3619E+02	.0000E+00	.0000E+00	.0000E+00
91	.3619E+02	-.9650E+02	.3619E+02	.0000E+00	.0000E+00	.0000E+00
92	.6357E+02	-.1695E+03	.6357E+02	.4470E+03	.1079E+03	-.1592E+03
93	.3541E+02	-.9443E+02	.3541E+02	.0000E+00	.0000E+00	.0000E+00
94	.3541E+02	-.9443E+02	.3541E+02	.0000E+00	.0000E+00	.0000E+00
95	.3541E+02	-.9443E+02	.3541E+02	.0000E+00	.0000E+00	.0000E+00
96	.3541E+02	-.9443E+02	.3541E+02	.0000E+00	.0000E+00	.0000E+00
97	.3541E+02	-.9443E+02	.3541E+02	.0000E+00	.0000E+00	.0000E+00
98	.6766E+02	-.1804E+03	.6766E+02	.5678E+03	.4101E+03	.5257E+03
99	.7090E+02	-.1891E+03	.7090E+02	-.7423E+03	-.1759E+03	.2732E+03
100	.1717E+02	-.4579E+02	.1717E+02	.0000E+00	.8276E-05	.2207E-04
101	.1717E+02	-.4579E+02	.1717E+02	.0000E+00	-.8276E-05	-.2207E-04
102	.4625E+02	-.1233E+03	.4625E+02	-.1053E+04	-.7618E+03	-.9780E+03
103	.1948E+02	-.5194E+02	.1948E+02	.0000E+00	.0000E+00	.0000E+00
104	.1948E+02	-.5194E+02	.1948E+02	.0000E+00	.0000E+00	.0000E+00
105	.1948E+02	-.5194E+02	.1948E+02	.0000E+00	.0000E+00	.0000E+00
106	.1948E+02	-.5194E+02	.1948E+02	.0000E+00	.0000E+00	.0000E+00
107	.1948E+02	-.5194E+02	.1948E+02	.0000E+00	.0000E+00	.0000E+00
108	.4352E+02	-.1161E+03	.4352E+02	.8071E+03	.4327E+03	.3468E+03
109	.1906E+02	-.5082E+02	.1906E+02	.0000E+00	.0000E+00	.0000E+00
110	.1906E+02	-.5082E+02	.1906E+02	.0000E+00	.1470E-04	.3919E-04
111	.1906E+02	-.5082E+02	.1906E+02	.0000E+00	-.4409E-04	-.1176E-03
112	.1906E+02	-.5082E+02	.1906E+02	.0000E+00	.1029E-03	.2743E-03
113	.1906E+02	-.5082E+02	.1906E+02	.0000E+00	-.1029E-03	-.2743E-03
114	.7665E+02	-.2044E+03	.7665E+02	-.1144E+03	.5506E+03	.1583E+04
115	.1016E+04	-.2708E+04	.1016E+04	-.1875E+05	-.4635E+03	.1751E+05

========== I M A G E S 3 D ==========
= Copyright (c) 1984 Celestial Software Inc. =
==========

SOLVE DISPLACEMENTS Version 2.0 07/01/90

L

L O A D C A S E 1

UBC SEISMIC LOAD - NS & EW DIR.

APPLIED LOAD VECTOR

Node	Fx	Fy	Fz	Mx	My	Mz
116	.2585E+03	-.6893E+03	.2585E+03	.4221E+04	-.9047E+03	-.6633E+04
117	.2585E+03	-.6893E+03	.2585E+03	.6633E+04	.9047E+03	-.4221E+04
118	.2585E+03	-.6893E+03	.2585E+03	.4221E+04	.9047E+03	-.1808E+04
119	.2585E+03	-.6893E+03	.2585E+03	.1808E+04	-.9047E+03	-.4221E+04
120	.1147E+05	-.3058E+05	.1147E+05	-.3416E+03	.0000E+00	.3416E+03
121	.2736E+03	-.7297E+03	.2736E+03	.1216E+04	.0000E+00	-.1216E+04
122	.1586E+02	-.4231E+02	.1586E+02	.1537E+02	.0000E+00	-.1537E+02
123	.1586E+02	-.4231E+02	.1586E+02	.1537E+02	.0000E+00	-.1537E+02
124	.3173E+02	-.8461E+02	.3173E+02	.0000E+00	.0000E+00	.0000E+00
125	.3173E+02	-.8461E+02	.3173E+02	.0000E+00	.0000E+00	.0000E+00
126	.3173E+02	-.8461E+02	.3173E+02	.0000E+00	.0000E+00	.0000E+00
127	.3173E+02	-.8461E+02	.3173E+02	.0000E+00	.0000E+00	.0000E+00
128	.3173E+02	-.8461E+02	.3173E+02	.0000E+00	.0000E+00	.0000E+00
129	.3173E+02	-.8461E+02	.3173E+02	.0000E+00	.0000E+00	.0000E+00
130	.3570E+02	-.9519E+02	.3570E+02	.8644E+01	.0000E+00	-.8644E+01
131	.3570E+02	-.9519E+02	.3570E+02	.8644E+01	.0000E+00	-.8644E+01
132	.3173E+02	-.8461E+02	.3173E+02	-.2401E+02	.0000E+00	.2401E+02
133	.3173E+02	-.8461E+02	.3173E+02	-.1537E+02	.0000E+00	.1537E+02
134	.1571E+02	-.4189E+02	.1571E+02	.0000E+00	-.1270E+02	-.3387E+02
135	.1571E+02	-.4189E+02	.1571E+02	-.8644E+01	.1270E+02	.4251E+02

========== I M A G E S 3 D ==========
= Copyright (c) 1984 Celestial Software Inc. =
==========

SOLVE DISPLACEMENTS Version 2.0 07/01/90

L

L O A D C A S E 1

UBC SEISMIC LOAD - NS & EW DIR.

DISPLACEMENTS

	Translations			/	Rotations		
Node	X	Y	Z	/	X	Y	Z
1	.0000E+00	.0000E+00	.0000E+00	/	.9036E-04	.2967E-04	-.1421E-03
2	.0000E+00	.0000E+00	.0000E+00	/	.2799E-03	.0000E+00	.0000E+00
3	.0000E+00	.0000E+00	.0000E+00	/	.1873E-03	.0000E+00	.0000E+00
4	.0000E+00	.0000E+00	.0000E+00	/	.7113E-04	.0000E+00	.0000E+00
5	.0000E+00	.0000E+00	.0000E+00	/	.0000E+00	.0000E+00	.0000E+00
6	.0000E+00	.0000E+00	.0000E+00	/	.0000E+00	.0000E+00	-.4953E-04
7	.0000E+00	.0000E+00	.0000E+00	/	.0000E+00	.0000E+00	-.1482E-03
8	.0000E+00	.0000E+00	.0000E+00	/	.0000E+00	.0000E+00	-.1785E-03
9	.0000E+00	.0000E+00	.0000E+00	/	.0000E+00	.0000E+00	-.1434E-03
10	.0000E+00	.0000E+00	.0000E+00	/	.0000E+00	.0000E+00	-.4474E-04
11	.0000E+00	.0000E+00	.0000E+00	/	.0000E+00	.0000E+00	.0000E+00
12	.0000E+00	.0000E+00	.0000E+00	/	.1021E-03	.0000E+00	.0000E+00
13	.0000E+00	.0000E+00	.0000E+00	/	.2853E-03	.0000E+00	.0000E+00
14	.0000E+00	.0000E+00	.0000E+00	/	.4188E-03	.0000E+00	.0000E+00
15	.0000E+00	.0000E+00	.0000E+00	/	.4930E-03	.0000E+00	.0000E+00
16	.0000E+00	.0000E+00	.0000E+00	/	.4800E-03	.0000E+00	.0000E+00
17	.0000E+00	.0000E+00	.0000E+00	/	.4312E-03	.0000E+00	.0000E+00
18	.0000E+00	.0000E+00	.0000E+00	/	.1966E-03	.1100E-03	-.5184E-04
19	.6141E-04	-.5134E-05	.5645E-02	/	.2328E-03	.1149E-03	-.4276E-05
20	.6450E-04	-.2924E-04	.3702E-02	/	.1490E-03	.1694E-03	.0000E+00
21	.7194E-04	-.5586E-04	.1380E-02	/	.5482E-04	.1700E-03	.0000E+00
22	.8822E-04	-.1036E-03	.8813E-04	/	.6994E-05	.1839E-04	-.7063E-05
23	.9607E-03	-.5998E-04	.7040E-04	/	.3824E-04	-.1302E-03	.0000E+00
24	.2714E-02	-.4131E-04	.6303E-04	/	.9819E-04	-.9576E-04	.0000E+00
25	.3437E-02	-.2675E-04	.5929E-04	/	.1338E-03	.2604E-05	.0000E+00
26	.2636E-02	-.1261E-04	.5720E-04	/	.9583E-04	.1006E-03	.0000E+00
27	.8452E-03	.4775E-05	.5726E-04	/	.3261E-04	.1302E-03	.0000E+00
28	.5722E-04	.3974E-04	.6337E-04	/	.5282E-05	-.2925E-04	-.3999E-05
29	.5172E-04	.7937E-05	.2011E-02	/	.8111E-04	-.2267E-03	.0000E+00
30	.5142E-04	-.6418E-05	.5435E-02	/	.2084E-03	-.2245E-03	.0000E+00
31	.5247E-04	-.1682E-04	.8219E-02	/	.3281E-03	-.1423E-03	.0000E+00
32	.5400E-04	-.2586E-04	.9566E-02	/	.3760E-03	-.3523E-04	.0000E+00
33	.5619E-04	-.3572E-04	.9428E-02	/	.3771E-03	.5334E-04	.0000E+00
34	.6029E-04	-.4777E-04	.8487E-02	/	.3389E-03	.7048E-04	-.3576E-05
35	.1681E-03	-.8006E-05	.9549E-02	/	.1220E-03	.2045E-03	-.5338E-05
36	.1716E-03	-.5585E-04	.6145E-02	/	.7311E-04	.2934E-03	.0000E+00
37	.1807E-03	-.1074E-03	.2267E-02	/	.2570E-04	.2734E-03	.0000E+00
38	.1921E-03	-.1672E-03	.1714E-03	/	.1619E-05	.3235E-04	-.3181E-05
39	.1493E-02	-.1168E-03	.1582E-03	/	.1002E-04	-.1994E-03	.0000E+00
40	.4256E-02	-.7949E-04	.1467E-03	/	.4205E-04	-.1564E-03	.0000E+00

KAISER ENGINEERS HANFORD S/N:801854 02/22/95
PAGE 21 Run ID=MN61973 08:49:48

```
============== I M A G E S  3 D ==============
= Copyright (c) 1984   Celestial Software Inc. =
===============================================
```

SOLVE DISPLACEMENTS Version 2.0 07/01/90

L

L O A D C A S E 1

UBC SEISMIC LOAD - NS & EW DIR.

Node	Translations X	Translations Y	Translations Z	Rotations X	Rotations Y	Rotations Z
41	.5421E-02	-.5082E-04	.1405E-03	.4641E-04	.6131E-05	.0000E+00
42	.4106E-02	-.2334E-04	.1385E-03	.3790E-04	.1634E-03	.0000E+00
43	.1298E-02	.1055E-04	.1404E-03	.8509E-05	.1984E-03	.0000E+00
44	.1298E-03	.5745E-04	.1449E-03	.2730E-05	-.4863E-04	-.3055E-05
45	.1251E-03	.1675E-04	.3214E-02	.2823E-04	-.3551E-03	.0000E+00
46	.1220E-03	-.1066E-04	.8656E-02	.8443E-04	-.3618E-03	.0000E+00
47	.1216E-03	-.3047E-04	.1313E-01	.1179E-03	-.2275E-03	.0000E+00
48	.1234E-03	-.4852E-04	.1528E-01	.1430E-03	-.5577E-04	.0000E+00
49	.1274E-03	-.6765E-04	.1504E-01	.1333E-03	.8621E-04	.0000E+00
50	.1344E-03	-.9293E-04	.1351E-01	.1169E-03	.1161E-03	-.3487E-05
51	.2937E-03	-.1256E-04	.1080E-01	-.8598E-05	.2439E-03	-.5981E-05
52	.2968E-03	-.7684E-04	.6841E-02	-.9825E-05	.3343E-03	.0000E+00
53	.3031E-03	-.1406E-03	.2515E-02	-.3016E-05	.2981E-03	.0000E+00
54	.3106E-03	-.2102E-03	.2546E-03	.5673E-05	.3171E-04	-.7283E-05
55	.1746E-02	-.1562E-03	.2443E-03	.1323E-04	-.2159E-03	.0000E+00
56	.4736E-02	-.1108E-03	.2361E-03	.1487E-05	-.1696E-03	.0000E+00
57	.6008E-02	-.7113E-04	.2299E-03	.7137E-05	.5689E-05	.0000E+00
58	.4550E-02	-.3173E-04	.2276E-03	.2365E-05	.1822E-03	.0000E+00
59	.1468E-02	.1056E-04	.2295E-03	.7119E-05	.2151E-03	.0000E+00
60	.2046E-03	.6252E-04	.2324E-03	.5344E-05	-.5306E-04	-.3696E-05
61	.2012E-03	.1981E-04	.3503E-02	-.1820E-05	-.3771E-03	.0000E+00
62	.1986E-03	-.1330E-04	.9262E-02	-.2944E-04	-.3819E-03	.0000E+00
63	.1980E-03	-.4106E-04	.1385E-01	-.5219E-04	-.2223E-03	.0000E+00
64	.1999E-03	-.6643E-04	.1573E-01	-.1019E-03	-.2594E-04	.0000E+00
65	.2037E-03	-.9389E-04	.1513E-01	-.1252E-03	.1047E-03	.0000E+00
66	.2096E-03	-.1253E-03	.1334E-01	-.1315E-03	.1307E-03	-.2741E-05
67	.4274E-03	-.1637E-04	.9214E-02	-.1352E-03	.2260E-03	-.6015E-05
68	.4280E-03	-.8934E-04	.5770E-02	-.8750E-04	.2779E-03	.0000E+00
69	.4309E-03	-.1636E-03	.2176E-02	-.2784E-04	.2476E-03	.0000E+00
70	.4388E-03	-.2367E-03	.3352E-03	-.1412E-05	.2095E-04	-.4385E-05
71	.1798E-02	-.1806E-03	.3317E-03	-.8810E-05	-.1956E-03	.0000E+00
72	.4549E-02	-.1332E-03	.3244E-03	-.1829E-04	.1585E-03	.0000E+00
73	.5703E-02	-.8747E-04	.3184E-03	-.3505E-04	.9665E-05	.0000E+00
74	.4330E-02	-.4122E-04	.3143E-03	-.2224E-04	.1673E-03	.0000E+00
75	.1491E-02	.9760E-05	.3124E-03	-.5116E-05	.1983E-03	.0000E+00
76	.2749E-03	.5948E-04	.3171E-03	.1662E-05	-.4232E-04	-.2357E-05
77	.2730E-03	.1970E-04	.3047E-02	-.3974E-04	-.3167E-03	.0000E+00
78	.2721E-03	-.1674E-04	.7821E-02	-.1014E-03	-.3119E-03	.0000E+00
79	.2732E-03	-.4967E-04	.1136E-01	-.1744E-03	-.1542E-03	.0000E+00
80	.2767E-03	-.8056E-04	.1213E-01	-.2249E-03	.5215E-04	.0000E+00
81	.2819E-03	-.1111E-03	.1040E-01	-.3047E-03	.1752E-03	.0000E+00

KAISER ENGINEERS HANFORD S/N:801854 02/22/95
PAGE 22 Run ID=MN61973 08:49:48

```
============== I M A G E S  3 D ==============
= Copyright (c) 1984   Celestial Software Inc. =
===============================================
```

SOLVE DISPLACEMENTS Version 2.0 07/01/90

L

L O A D C A S E 1

UBC SEISMIC LOAD - NS & EW DIR.

Node	Translations X	Translations Y	Translations Z	Rotations X	Rotations Y	Rotations Z
82	.2854E-03	-.1473E-03	.8352E-02	-.3219E-03	.9438E-04	-.6844E-05
83	.5977E-03	-.1684E-04	.4268E-02	-.2238E-03	.1461E-03	-.7510E-05
84	.5958E-03	-.9390E-04	.2470E-02	-.1524E-03	.1168E-03	.0000E+00
85	.5915E-03	-.1712E-03	.1053E-02	-.5400E-04	.9033E-04	.0000E+00
86	.5802E-03	-.2542E-03	.4525E-03	.7303E-05	-.2821E-05	-.5995E-05
87	.1717E-02	-.2038E-03	.4349E-03	.3031E-05	-.1430E-03	.0000E+00
88	.3447E-02	-.1511E-03	.4267E-03	-.6202E-04	-.8058E-04	.0000E+00
89	.3962E-02	-.1008E-03	.4224E-03	-.9135E-04	.1425E-04	.0000E+00
90	.3041E-02	-.5280E-04	.4188E-03	-.7155E-04	.1046E-03	.0000E+00
91	.1227E-02	-.3041E-05	.4116E-03	-.1423E-04	.1298E-03	.0000E+00
92	.3502E-03	.5692E-04	.3926E-03	.4492E-05	-.1683E-04	-.3798E-05
93	.3524E-03	.1681E-04	.1882E-02	-.4509E-04	-.1792E-03	.0000E+00
94	.3549E-03	-.2173E-04	.4382E-02	-.1487E-03	-.1508E-03	.0000E+00
95	.3581E-03	-.5793E-04	.5890E-02	-.2229E-03	-.4813E-04	.0000E+00
96	.3629E-03	-.9397E-04	.5698E-02	-.2428E-03	.7326E-04	.0000E+00
97	.3722E-03	-.1300E-03	.3654E-02	-.1867E-03	.1969E-03	.0000E+00
98	.3900E-03	-.1647E-03	.1705E-02	-.1565E-03	.5861E-04	.1109E-04
99	.7001E-03	-.1390E-04	.8891E-03	-.1840E-03	.8955E-04	.1563E-05
100	.6981E-03	-.9337E-04	.9121E-04	-.1363E-03	.2902E-04	-.6732E-05
101	.7009E-03	-.1703E-03	-.4530E-05	-.7300E-04	-.1431E-04	-.5206E-05
102	.7130E-03	-.2576E-03	.4732E-03	-.9672E-05	-.5526E-04	-.1148E-04
103	.1707E-02	-.2117E-03	.4835E-03	.5312E-05	-.7175E-04	.5263E-05
104	.2605E-02	-.1549E-03	.4830E-03	.3223E-05	-.4208E-04	.3914E-04
105	.2775E-02	-.1042E-03	.4798E-03	.3208E-05	.2041E-04	.5234E-04
106	.2049E-02	-.5575E-04	.4786E-03	.3112E-05	.7216E-04	.4821E-04
107	.9179E-03	-.8916E-05	.4835E-03	.2702E-05	.7094E-04	.2304E-04
108	.3961E-03	.5822E-04	.5031E-03	.1061E-04	-.6539E-05	.3504E-06
109	.3978E-03	.1491E-04	.1148E-02	-.4482E-04	-.7592E-04	-.3208E-05
110	.3996E-03	-.2388E-04	.2286E-02	-.1044E-03	-.7129E-04	-.2401E-05
111	.4026E-03	-.6092E-04	.2919E-02	-.1371E-03	-.1101E-04	-.2455E-05
112	.4068E-03	-.9749E-04	.2524E-02	-.1412E-03	.6275E-04	-.2264E-05
113	.4103E-03	-.1389E-03	.1276E-02	-.1013E-03	.9926E-04	-.4758E-05
114	.4078E-03	-.1673E-03	-.1435E-03	-.7316E-04	.8703E-04	.1412E-04
115	.0000E+00	-.5297E-03	.0000E+00	-.8086E-05	-.1952E-07	.8060E-05
116	.0000E+00	.0000E+00	.0000E+00	.5573E-05	-.3687E-06	-.7858E-05
117	.0000E+00	.0000E+00	.0000E+00	.7861E-05	.3548E-06	-.5572E-05
118	.0000E+00	.0000E+00	.0000E+00	.5575E-05	.3555E-06	-.2478E-05
119	.0000E+00	.0000E+00	.0000E+00	.2481E-05	-.3680E-06	-.5570E-05
120	.2206E-02	-.1320E-02	.2207E-02	-.1706E-05	-.1334E-07	.1701E-05
121	.4596E-04	-.4419E-03	.4597E-04	.7520E-05	-.6060E-08	-.7517E-05
122	.0000E+00	.0000E+00	.0000E+00	.3771E-03	.0000E+00	.0000E+00

========== I M A G E S 3 D ==========
= Copyright (c) 1984 Celestial Software Inc. =
==========

SOLVE DISPLACEMENTS Version 2.0 07/01/90

L

LOAD CASE 1

UBC SEISMIC LOAD - NS & EW DIR.

Node	Translations X	Translations Y	Translations Z	/	Rotations X	Rotations Y	Rotations Z
123	.0000E+00	.0000E+00	.0000E+00	/	.3755E-03	.0000E+00	.0000E+00
124	.6776E-04	.4831E-04	.7697E-02	/	.3208E-03	.9038E-04	-.4368E-05
125	.7736E-04	-.8661E-04	.7392E-02	/	.2947E-03	.3874E-04	-.4036E-05
126	.1698E-03	.7691E-04	.1322E-01	/	.1806E-03	.1631E-03	-.5151E-05
127	.1457E-03	-.1428E-03	.1172E-01	/	.9764E-04	.6252E-04	-.2968E-05
128	.2941E-03	.9151E-04	.1529E-01	/	.6719E-05	.2055E-03	-.5882E-05
129	.2173E-03	-.1812E-03	.1147E-01	/	-.1200E-03	.5647E-04	-.3400E-05
130	.4278E-03	.9769E-04	.1366E-01	/	-.1540E-03	.2185E-03	-.6492E-05
131	.2949E-03	-.2060E-03	.7505E-02	/	-.2377E-03	-.9127E-05	-.3775E-05
132	.5993E-03	.9931E-04	.7807E-02	/	-.2706E-03	.2083E-03	-.5362E-05
133	.3814E-03	-.2105E-03	.1441E-02	/	-.2039E-03	-.3025E-04	-.1787E-05
134	.6976E-03	.9745E-04	.3395E-02	/	-.2627E-03	.1577E-03	-.9112E-05
135	.4165E-03	-.2072E-03	-.1501E-02	/	-.1512E-03	.4722E-04	-.4481E-05

========== I M A G E S 3 D ==========
= Copyright (c) 1984 Celestial Software Inc. =
==========

SOLVE DISPLACEMENTS Version 2.0 07/01/90

L

LOAD CASE 2

GRAVITY LOAD

APPLIED LOAD VECTOR

Node	Fx	Fy	Fz	Mx	My	Mz
1	.0000E+00	-.7264E+02	-.1705E-14	-.6659E+03	.0000E+00	.0000E+00
2	.0000E+00	-.6358E+02	.0000E+00	.0000E+00	.0000E+00	.0000E+00
3	.0000E+00	-.4254E+02	.0000E+00	.0000E+00	.0000E+00	.0000E+00
4	.0000E+00	-.4254E+02	.0000E+00	.0000E+00	.0000E+00	.0000E+00
5	.0000E+00	-.5657E+02	.0000E+00	.0000E+00	.0000E+00	.0000E+00
6	.0000E+00	-.4825E+02	.0000E+00	.0000E+00	.0000E+00	.0000E+00
7	.0000E+00	-.4825E+02	.0000E+00	.0000E+00	.0000E+00	.0000E+00
8	.0000E+00	-.4825E+02	.0000E+00	.0000E+00	.0000E+00	.0000E+00
9	.0000E+00	-.4825E+02	.0000E+00	.0000E+00	.0000E+00	.0000E+00
10	.0000E+00	-.4825E+02	.0000E+00	.0000E+00	.0000E+00	.0000E+00
11	.0000E+00	-.6513E+02	.0000E+00	.0000E+00	.0000E+00	.0000E+00
12	.0000E+00	-.4721E+02	.0000E+00	.0000E+00	.0000E+00	.0000E+00
13	.0000E+00	-.4721E+02	.0000E+00	.0000E+00	.0000E+00	.0000E+00
14	.0000E+00	-.4721E+02	.0000E+00	.0000E+00	.0000E+00	.0000E+00
15	.0000E+00	-.4721E+02	.0000E+00	.0000E+00	.0000E+00	.0000E+00
16	.0000E+00	-.4721E+02	.0000E+00	.0000E+00	.0000E+00	.0000E+00
17	.0000E+00	-.6591E+02	.0000E+00	.0000E+00	.0000E+00	.0000E+00
18	.0000E+00	-.7101E+02	-.4351E-14	.5444E+03	.0000E+00	.0000E+00
19	.0000E+00	-.1272E+03	.0000E+00	.0000E+00	.0000E+00	.0000E+00
20	.0000E+00	-.8509E+02	.0000E+00	.0000E+00	.0000E+00	.0000E+00
21	.0000E+00	-.8509E+02	.0000E+00	.0000E+00	.0000E+00	.0000E+00
22	.0000E+00	-.1131E+03	.0000E+00	.0000E+00	.0000E+00	.0000E+00
23	.0000E+00	-.9650E+02	.0000E+00	.0000E+00	.0000E+00	.0000E+00
24	.0000E+00	-.9650E+02	.0000E+00	.0000E+00	.0000E+00	.0000E+00
25	.0000E+00	-.9650E+02	.0000E+00	.0000E+00	.0000E+00	.0000E+00
26	.0000E+00	-.9650E+02	.0000E+00	.0000E+00	.0000E+00	.0000E+00
27	.0000E+00	-.9650E+02	.0000E+00	.0000E+00	.0000E+00	.0000E+00
28	.0000E+00	-.1303E+03	.0000E+00	.0000E+00	.0000E+00	.0000E+00
29	.0000E+00	-.9443E+02	.0000E+00	.0000E+00	.0000E+00	.0000E+00
30	.0000E+00	-.9443E+02	.0000E+00	.0000E+00	.0000E+00	.0000E+00
31	.0000E+00	-.9443E+02	.0000E+00	.0000E+00	.0000E+00	.0000E+00
32	.0000E+00	-.9443E+02	.0000E+00	.0000E+00	.0000E+00	.0000E+00
33	.0000E+00	-.9443E+02	.0000E+00	.0000E+00	.0000E+00	.0000E+00
34	.0000E+00	-.1318E+03	.0000E+00	.0000E+00	.0000E+00	.0000E+00
35	.0000E+00	-.1272E+03	.0000E+00	.0000E+00	.0000E+00	.0000E+00

========== I M A G E S 3 D ==========
= Copyright (c) 1984 Celestial Software Inc. =
==========

SOLVE DISPLACEMENTS Version 2.0 07/01/90

L

LOAD CASE 2

GRAVITY LOAD

APPLIED LOAD VECTOR

Node	Fx	Fy	Fz	Mx	My	Mz
36	.0000E+00	-.8509E+02	.0000E+00	.0000E+00	.0000E+00	.0000E+00
37	.0000E+00	-.8509E+02	.0000E+00	.0000E+00	.0000E+00	.0000E+00
38	.0000E+00	-.1131E+03	.0000E+00	.0000E+00	.0000E+00	.0000E+00
39	.0000E+00	-.9650E+02	.0000E+00	.0000E+00	.0000E+00	.0000E+00
40	.0000E+00	-.9650E+02	.0000E+00	.0000E+00	.0000E+00	.0000E+00
41	.0000E+00	-.9650E+02	.0000E+00	.0000E+00	.0000E+00	.0000E+00
42	.0000E+00	-.9650E+02	.0000E+00	.0000E+00	.0000E+00	.0000E+00
43	.0000E+00	-.9650E+02	.0000E+00	.0000E+00	.0000E+00	.0000E+00
44	.0000E+00	-.1303E+03	.0000E+00	.0000E+00	.0000E+00	.0000E+00
45	.0000E+00	-.9443E+02	.0000E+00	.0000E+00	.0000E+00	.0000E+00
46	.0000E+00	-.9443E+02	.0000E+00	.0000E+00	.0000E+00	.0000E+00
47	.0000E+00	-.9443E+02	.0000E+00	.0000E+00	.0000E+00	.0000E+00
48	.0000E+00	-.9443E+02	.0000E+00	.0000E+00	.0000E+00	.0000E+00
49	.0000E+00	-.9443E+02	.0000E+00	.0000E+00	.0000E+00	.0000E+00
50	.0000E+00	-.1318E+03	.0000E+00	.0000E+00	.0000E+00	.0000E+00
51	.0000E+00	-.1272E+03	.0000E+00	.0000E+00	.0000E+00	.0000E+00
52	.0000E+00	-.8509E+02	.0000E+00	.0000E+00	.0000E+00	.0000E+00
53	.0000E+00	-.8509E+02	.0000E+00	.0000E+00	.0000E+00	.0000E+00
54	.0000E+00	-.1131E+03	.0000E+00	.0000E+00	.0000E+00	.0000E+00
55	.0000E+00	-.9650E+02	.0000E+00	.0000E+00	.0000E+00	.0000E+00
56	.0000E+00	-.9650E+02	.0000E+00	.0000E+00	.0000E+00	.0000E+00
57	.0000E+00	-.9650E+02	.0000E+00	.0000E+00	.0000E+00	.0000E+00
58	.0000E+00	-.9650E+02	.0000E+00	.0000E+00	.0000E+00	.0000E+00
59	.0000E+00	-.9650E+02	.0000E+00	.0000E+00	.0000E+00	.0000E+00
60	.0000E+00	-.1303E+03	.0000E+00	.0000E+00	.0000E+00	.0000E+00
61	.0000E+00	-.9443E+02	.0000E+00	.0000E+00	.0000E+00	.0000E+00
62	.0000E+00	-.9443E+02	.0000E+00	.0000E+00	.0000E+00	.0000E+00
63	.0000E+00	-.9443E+02	.0000E+00	.0000E+00	.0000E+00	.0000E+00
64	.0000E+00	-.9443E+02	.0000E+00	.0000E+00	.0000E+00	.0000E+00
65	.0000E+00	-.9443E+02	.0000E+00	.0000E+00	.0000E+00	.0000E+00
66	.0000E+00	-.1318E+03	.0000E+00	.0000E+00	.0000E+00	.0000E+00
67	.0000E+00	-.1431E+03	.0000E+00	.0000E+00	.0000E+00	.0000E+00
68	.0000E+00	-.9572E+02	.0000E+00	.0000E+00	.0000E+00	.0000E+00
69	.0000E+00	-.9572E+02	.0000E+00	.0000E+00	.0000E+00	.0000E+00
70	.0000E+00	-.1273E+03	.0000E+00	.0000E+00	.0000E+00	.0000E+00
71	.0000E+00	-.1086E+03	.0000E+00	.0000E+00	.0000E+00	.0000E+00
72	.0000E+00	-.1086E+03	.0000E+00	.0000E+00	.0000E+00	.0000E+00
73	.0000E+00	-.1086E+03	.0000E+00	.0000E+00	.0000E+00	.0000E+00
74	.0000E+00	-.1086E+03	.0000E+00	.0000E+00	.0000E+00	.0000E+00
75	.0000E+00	-.1086E+03	.0000E+00	.0000E+00	.0000E+00	.0000E+00

========== I M A G E S 3 D ==========
= Copyright (c) 1984 Celestial Software Inc. =
==========

SOLVE DISPLACEMENTS Version 2.0 07/01/90

L

LOAD CASE 2

GRAVITY LOAD

APPLIED LOAD VECTOR

Node	Fx	Fy	Fz	Mx	My	Mz
76	.0000E+00	-.1466E+03	.0000E+00	.0000E+00	.0000E+00	.0000E+00
77	.0000E+00	-.1062E+03	.0000E+00	.0000E+00	.0000E+00	.0000E+00
78	.0000E+00	-.1062E+03	.0000E+00	.0000E+00	.0000E+00	.0000E+00
79	.0000E+00	-.1062E+03	.0000E+00	.0000E+00	.0000E+00	.0000E+00
80	.0000E+00	-.1062E+03	.0000E+00	.0000E+00	.0000E+00	.0000E+00
81	.0000E+00	-.1062E+03	.0000E+00	.0000E+00	.0000E+00	.0000E+00
82	.0000E+00	-.1483E+03	.0000E+00	.0000E+00	.0000E+00	.0000E+00
83	.0000E+00	-.1272E+03	.0000E+00	.0000E+00	.0000E+00	.0000E+00
84	.0000E+00	-.8509E+02	.0000E+00	.0000E+00	.0000E+00	.0000E+00
85	.0000E+00	-.8509E+02	.0000E+00	.0000E+00	.0000E+00	.0000E+00
86	.0000E+00	-.1309E+03	.0000E+00	-.6223E+02	.0000E+00	-.8297E+02
87	.0000E+00	-.9650E+02	.0000E+00	.0000E+00	.0000E+00	.0000E+00
88	.0000E+00	-.9650E+02	.0000E+00	.0000E+00	.0000E+00	.0000E+00
89	.0000E+00	-.9650E+02	.0000E+00	.0000E+00	.0000E+00	.0000E+00
90	.0000E+00	-.9650E+02	.0000E+00	.0000E+00	.0000E+00	.0000E+00
91	.0000E+00	-.9650E+02	.0000E+00	.0000E+00	.0000E+00	.0000E+00
92	.0000E+00	-.1695E+03	.0000E+00	.4709E+03	.0000E+00	-.1831E+03
93	.0000E+00	-.9443E+02	.0000E+00	.0000E+00	.0000E+00	.0000E+00
94	.0000E+00	-.9443E+02	.0000E+00	.0000E+00	.0000E+00	.0000E+00
95	.0000E+00	-.9443E+02	.0000E+00	.0000E+00	.0000E+00	.0000E+00
96	.0000E+00	-.9443E+02	.0000E+00	.0000E+00	.0000E+00	.0000E+00
97	.0000E+00	-.9443E+02	.0000E+00	.0000E+00	.0000E+00	.0000E+00
98	.0000E+00	-.1804E+03	.0000E+00	.5832E+03	.0000E+00	.5103E+03
99	.0000E+00	-.1891E+03	-.1705E-14	-.1344E+03	.0000E+00	-.3348E+03
100	.0000E+00	-.4579E+02	.0000E+00	.0000E+00	.0000E+00	.2207E-04
101	.0000E+00	-.4579E+02	.0000E+00	.0000E+00	.0000E+00	-.2207E-04
102	.0000E+00	-.1233E+03	.0000E+00	-.1045E+04	.0000E+00	-.9867E+03
103	.0000E+00	-.5194E+02	.0000E+00	.0000E+00	.0000E+00	.0000E+00
104	.0000E+00	-.5194E+02	.0000E+00	.0000E+00	.0000E+00	.0000E+00
105	.0000E+00	-.5194E+02	.0000E+00	.0000E+00	.0000E+00	.0000E+00
106	.0000E+00	-.5194E+02	.0000E+00	.0000E+00	.0000E+00	.0000E+00
107	.0000E+00	-.5194E+02	.0000E+00	.0000E+00	.0000E+00	.0000E+00
108	.0000E+00	-.1161E+03	.0000E+00	.8206E+03	.0000E+00	.3333E+03
109	.0000E+00	-.5082E+02	.0000E+00	.0000E+00	.0000E+00	.0000E+00
110	.0000E+00	-.5082E+02	.0000E+00	.0000E+00	.0000E+00	.3919E-04
111	.0000E+00	-.5082E+02	.0000E+00	.0000E+00	.0000E+00	-.1176E-03
112	.0000E+00	-.5082E+02	.0000E+00	.0000E+00	.0000E+00	.2743E-03
113	.0000E+00	-.5082E+02	.0000E+00	.0000E+00	.0000E+00	-.2743E-03
114	.0000E+00	-.2044E+03	-.4351E-14	.4801E+03	.0000E+00	.9881E+03
115	.0000E+00	-.2708E+04	.0000E+00	-.9919E+03	.0000E+00	-.2442E+03

========== I M A G E S 3 D ==========
= Copyright (c) 1984 Celestial Software Inc. =
==========

SOLVE DISPLACEMENTS Version 2.0 07/01/90

L

L O A D C A S E 2

GRAVITY LOAD

APPLIED LOAD VECTOR

Node	Fx	Fy	Fz	Mx	My	Mz
116	.2108E-13	-.6893E+03	.0000E+00	.0000E+00	.0000E+00	-.2413E+04
117	.0000E+00	-.6893E+03	.2108E-13	.2413E+04	.0000E+00	.0000E+00
118	-.2108E-13	-.6893E+03	.0000E+00	.0000E+00	.0000E+00	.2413E+04
119	.0000E+00	-.6893E+03	-.2108E-13	-.2413E+04	.0000E+00	.0000E+00
120	.0000E+00	-.3058E+05	.0000E+00	.0000E+00	.0000E+00	.0000E+00
121	.0000E+00	-.7297E+03	.0000E+00	.0000E+00	.0000E+00	.0000E+00
122	.0000E+00	-.4231E+02	.0000E+00	.0000E+00	.0000E+00	.0000E+00
123	.0000E+00	-.4231E+02	.0000E+00	.0000E+00	.0000E+00	.0000E+00
124	.0000E+00	-.8461E+02	.0000E+00	.0000E+00	.0000E+00	.0000E+00
125	.0000E+00	-.8461E+02	.0000E+00	.0000E+00	.0000E+00	.0000E+00
126	.0000E+00	-.8461E+02	.0000E+00	.0000E+00	.0000E+00	.0000E+00
127	.0000E+00	-.8461E+02	.0000E+00	.0000E+00	.0000E+00	.0000E+00
128	.0000E+00	-.8461E+02	.0000E+00	.0000E+00	.0000E+00	.0000E+00
129	.0000E+00	-.8461E+02	.0000E+00	.0000E+00	.0000E+00	.0000E+00
130	.0000E+00	-.9519E+02	.0000E+00	.0000E+00	.0000E+00	.0000E+00
131	.0000E+00	-.9519E+02	.0000E+00	.0000E+00	.0000E+00	.0000E+00
132	.0000E+00	-.8461E+02	.0000E+00	.0000E+00	.0000E+00	.0000E+00
133	.0000E+00	-.8461E+02	.0000E+00	.0000E+00	.0000E+00	.0000E+00
134	.0000E+00	-.4189E+02	.0000E+00	.0000E+00	.0000E+00	-.3387E+02
135	.0000E+00	-.4189E+02	.0000E+00	.0000E+00	.0000E+00	.3387E+02

========== I M A G E S 3 D ==========
= Copyright (c) 1984 Celestial Software Inc. =
==========

SOLVE DISPLACEMENTS Version 2.0 07/01/90

L

L O A D C A S E 2

GRAVITY LOAD

DISPLACEMENTS

	Translations			/	Rotations		
Node	X	Y	Z	/	X	Y	Z
1	.0000E+00	.0000E+00	.0000E+00	/	-.1001E-03	.6827E-06	.1309E-05
2	.0000E+00	.0000E+00	.0000E+00	/	-.1036E-05	.0000E+00	.0000E+00
3	.0000E+00	.0000E+00	.0000E+00	/	-.2893E-06	.0000E+00	.0000E+00
4	.0000E+00	.0000E+00	.0000E+00	/	.2309E-06	.0000E+00	.0000E+00
5	.0000E+00	.0000E+00	.0000E+00	/	.0000E+00	.0000E+00	.0000E+00
6	.0000E+00	.0000E+00	.0000E+00	/	.0000E+00	.0000E+00	-.9445E-06
7	.0000E+00	.0000E+00	.0000E+00	/	.0000E+00	.0000E+00	-.3678E-06
8	.0000E+00	.0000E+00	.0000E+00	/	.0000E+00	.0000E+00	-.4882E-06
9	.0000E+00	.0000E+00	.0000E+00	/	.0000E+00	.0000E+00	-.1254E-06
10	.0000E+00	.0000E+00	.0000E+00	/	.0000E+00	.0000E+00	.4059E-06
11	.0000E+00	.0000E+00	.0000E+00	/	.0000E+00	.0000E+00	.0000E+00
12	.0000E+00	.0000E+00	.0000E+00	/	-.1127E-05	.0000E+00	.0000E+00
13	.0000E+00	.0000E+00	.0000E+00	/	-.1991E-05	.0000E+00	.0000E+00
14	.0000E+00	.0000E+00	.0000E+00	/	-.2552E-05	.0000E+00	.0000E+00
15	.0000E+00	.0000E+00	.0000E+00	/	-.4026E-05	.0000E+00	.0000E+00
16	.0000E+00	.0000E+00	.0000E+00	/	-.4270E-05	.0000E+00	.0000E+00
17	.0000E+00	.0000E+00	.0000E+00	/	-.5154E-05	.0000E+00	.0000E+00
18	.0000E+00	.0000E+00	.0000E+00	/	.7570E-04	.3303E-05	-.2332E-05
19	-.3816E-05	-.2551E-04	-.2279E-04	/	-.1032E-05	-.7502E-06	.1775E-06
20	-.1960E-06	-.2522E-04	-.1130E-04	/	-.7550E-06	-.9328E-06	.0000E+00
21	.3580E-05	-.2506E-04	.1990E-05	/	.9417E-08	-.1009E-05	.0000E+00
22	.8342E-05	-.2717E-04	.1202E-04	/	.8662E-06	-.4574E-06	-.4668E-06
23	.1167E-04	-.2475E-04	.6650E-05	/	.1908E-06	.2374E-07	.0000E+00
24	.1079E-04	-.2459E-04	.2983E-05	/	.5959E-06	.9170E-07	.0000E+00
25	.7918E-05	-.2438E-04	-.4208E-07	/	.2266E-06	.2771E-06	.0000E+00
26	.3410E-05	-.2424E-04	-.3003E-05	/	.2185E-06	.3051E-06	.0000E+00
27	-.3274E-05	-.2408E-04	-.6454E-05	/	-.2278E-07	.5572E-06	.0000E+00
28	-.1119E-04	-.2663E-04	-.1134E-04	/	-.6444E-06	.4625E-06	.5223E-06
29	-.6556E-05	-.2417E-04	-.2138E-04	/	-.9211E-06	.8604E-06	.0000E+00
30	-.3356E-05	-.2438E-04	-.3778E-04	/	-.1415E-05	.1303E-05	.0000E+00
31	-.7700E-06	-.2460E-04	-.5802E-04	/	-.2731E-05	.1362E-05	.0000E+00
32	.1650E-05	-.2489E-04	-.7850E-04	/	-.3105E-05	.1342E-05	.0000E+00
33	.4219E-05	-.2526E-04	-.9631E-04	/	-.4487E-05	.1000E-05	.0000E+00
34	.7379E-05	-.2577E-04	-.1080E-03	/	-.4657E-05	.5458E-06	-.3380E-06
35	-.5850E-05	-.4890E-04	-.4616E-04	/	-.1097E-05	-.1417E-05	.4151E-07
36	-.1536E-05	-.4826E-04	-.2475E-04	/	-.4561E-06	-.1709E-05	.0000E+00
37	.2794E-05	-.4831E-04	-.3493E-05	/	-.5360E-06	-.1405E-05	.0000E+00
38	.6739E-05	-.4732E-04	.1256E-04	/	-.7223E-06	-.9394E-06	.3802E-06
39	.1623E-04	-.4760E-04	.8637E-05	/	.1651E-06	-.2808E-06	.0000E+00
40	.1699E-04	-.4688E-04	.4247E-05	/	-.2134E-07	.1771E-06	.0000E+00

========== I M A G E S 3 D ==========
= Copyright (c) 1984 Celestial Software Inc. =
==========

SOLVE DISPLACEMENTS Version 2.0 07/01/90

L

LOAD CASE 2

GRAVITY LOAD

Node	Translations X	Translations Y	Translations Z	Rotations X	Rotations Y	Rotations Z
41	.1373E-04	-.4645E-04	.1701E-06	.3040E-06	.2464E-06	.0000E+00
42	.7531E-05	-.4609E-04	-.3864E-05	.1395E-06	.5515E-06	.0000E+00
43	-.1303E-05	-.4618E-04	-.8200E-05	.2634E-06	.5879E-06	.0000E+00
44	-.1183E-04	-.4556E-04	-.1228E-04	.2953E-06	.7700E-06	-.2314E-06
45	-.7884E-05	-.4626E-04	-.3244E-04	-.1183E-07	.1891E-05	.0000E+00
46	-.3824E-05	-.4626E-04	-.6549E-04	-.1126E-05	.2461E-05	.0000E+00
47	-.1303E-06	-.4673E-04	-.1047E-03	-.1500E-05	.2710E-05	.0000E+00
48	.3452E-05	-.4729E-04	-.1427E-03	-.2734E-05	.2291E-05	.0000E+00
49	.7199E-05	-.4804E-04	-.1743E-03	-.2590E-05	.1882E-05	.0000E+00
50	.1141E-04	-.4933E-04	-.1959E-03	-.3334E-05	.9623E-06	-.1220E-06
51	-.6558E-05	-.6704E-04	-.6887E-04	-.9609E-06	-.1760E-05	.5204E-07
52	-.3524E-05	-.6699E-04	-.4147E-04	-.1069E-05	-.2254E-05	.0000E+00
53	-.4930E-06	-.6613E-04	-.1122E-04	-.1745E-06	-.2161E-05	.0000E+00
54	.2121E-05	-.6454E-04	.1116E-04	.6482E-06	-.1118E-05	.2227E-06
55	.1428E-04	-.6543E-04	.7525E-05	-.2989E-06	-.4565E-06	.0000E+00
56	.1800E-04	-.6518E-04	.4188E-05	.1065E-06	-.1619E-07	.0000E+00
57	.1482E-04	-.6456E-04	.7129E-06	-.2080E-06	.4209E-06	.0000E+00
58	.9501E-05	-.6392E-04	-.2725E-05	.4727E-07	.2668E-06	.0000E+00
59	.3558E-05	-.6302E-04	-.5830E-05	.1532E-06	.5005E-06	.0000E+00
60	-.7248E-05	-.6101E-04	-.8652E-05	.2131E-06	.8950E-06	-.2742E-06
61	-.4583E-05	-.6309E-04	-.3301E-04	-.9528E-07	.2305E-05	.0000E+00
62	-.1516E-05	-.6423E-04	-.7374E-04	.3971E-06	.3071E-05	.0000E+00
63	.1771E-05	-.6503E-04	-.1238E-03	-.2476E-06	.3516E-05	.0000E+00
64	.5161E-05	-.6593E-04	-.1774E-03	-.4130E-06	.3563E-05	.0000E+00
65	.8661E-05	-.6690E-04	-.2201E-03	-.1588E-05	.2043E-05	.0000E+00
66	.1203E-04	-.6778E-04	-.2419E-03	-.8265E-06	.8500E-06	.2086E-06
67	-.7234E-05	-.8014E-04	-.8714E-04	-.7064E-06	-.1853E-05	-.8224E-07
68	-.5375E-05	-.8025E-04	-.5609E-04	-.2597E-06	-.2683E-05	.0000E+00
69	-.3385E-05	-.8003E-04	-.1946E-04	-.5278E-06	-.2687E-05	.0000E+00
70	-.6548E-06	-.7816E-04	.7942E-05	-.1161E-05	-.1305E-05	-.1636E-06
71	.1054E-04	-.7867E-04	.6357E-05	-.8483E-07	-.1316E-06	.0000E+00
72	.1000E-04	-.7851E-04	.4094E-05	-.8288E-06	.1874E-06	.0000E+00
73	.1003E-04	-.7785E-04	.1728E-05	-.2209E-06	-.1848E-06	.0000E+00
74	.9522E-05	-.7686E-04	-.6998E-06	-.5817E-07	.2479E-06	.0000E+00
75	.5095E-05	-.7519E-04	-.3130E-05	.2928E-07	.3224E-06	.0000E+00
76	-.2578E-05	-.7304E-04	-.5084E-05	-.8546E-07	.6677E-06	.5200E-08
77	-.7647E-07	-.7562E-04	-.2491E-04	.8955E-06	.1959E-05	.0000E+00
78	.2095E-05	-.7716E-04	-.6020E-04	.8077E-06	.2682E-05	.0000E+00
79	.4316E-05	-.7853E-04	-.1019E-03	.2255E-05	.2822E-05	.0000E+00
80	.6774E-05	-.7991E-04	-.1477E-03	.3101E-05	.3210E-05	.0000E+00
81	.9505E-05	-.8111E-04	-.1996E-03	.3473E-05	.3647E-05	.0000E+00

========== I M A G E S 3 D ==========
= Copyright (c) 1984 Celestial Software Inc. =
==========

SOLVE DISPLACEMENTS Version 2.0 07/01/90

L

LOAD CASE 2

GRAVITY LOAD

Node	Translations X	Translations Y	Translations Z	Rotations X	Rotations Y	Rotations Z
82	.1243E-04	-.8163E-04	-.2277E-03	.2094E-05	.2196E-07	-.1092E-05
83	-.7259E-05	-.9046E-04	-.7995E-04	.1260E-05	-.1563E-05	.4777E-06
84	-.6021E-05	-.8991E-04	-.4443E-04	.1113E-05	-.3621E-05	.0000E+00
85	-.5975E-05	-.8932E-04	-.5228E-05	.1482E-05	-.2083E-05	.0000E+00
86	-.6834E-05	-.9043E-04	.1016E-04	.1680E-05	-.1920E-06	.8169E-06
87	-.4233E-05	-.8957E-04	.6731E-05	-.9425E-06	-.1684E-06	.0000E+00
88	.2896E-05	-.8835E-04	.5031E-05	.3111E-06	-.7291E-06	.0000E+00
89	.7638E-05	-.8731E-04	.3773E-05	.3896E-07	.1112E-06	.0000E+00
90	.7837E-05	-.8652E-04	.2469E-05	-.4159E-07	-.1315E-06	.0000E+00
91	.7857E-05	-.8541E-04	.6982E-06	.9172E-07	.1332E-06	.0000E+00
92	.5523E-05	-.8299E-04	-.2519E-05	.4920E-06	.1680E-06	-.8940E-06
93	.5943E-05	-.8461E-04	-.8873E-05	.2014E-06	.6333E-06	.0000E+00
94	.6734E-05	-.8634E-04	-.1140E-04	.2773E-05	-.2850E-06	.0000E+00
95	.7822E-05	-.8807E-04	-.1012E-04	.4400E-05	.1038E-06	.0000E+00
96	.8924E-05	-.9005E-04	-.1398E-04	.6643E-05	.4122E-06	.0000E+00
97	.1024E-04	-.9239E-04	-.2209E-04	.9382E-05	.6409E-06	.0000E+00
98	.1235E-04	-.9416E-04	-.2891E-04	.1250E-04	.2519E-06	.5212E-05
99	-.6342E-05	-.9429E-04	-.3016E-04	.4889E-05	-.9686E-06	-.2655E-05
100	-.5942E-05	-.9231E-04	-.1881E-04	.1758E-05	-.7122E-06	.4669E-06
101	-.4480E-05	-.9032E-04	-.7936E-05	-.9464E-06	-.9212E-06	.4603E-06
102	-.1977E-05	-.9408E-04	.5974E-05	-.5572E-05	-.1075E-05	-.4645E-05
103	.1103E-04	-.9280E-04	.6896E-05	.1013E-05	-.5618E-06	-.1965E-05
104	.1492E-04	-.9035E-04	.6146E-05	-.2539E-07	.2704E-07	-.1350E-05
105	.1289E-04	-.8949E-04	.5058E-05	.6435E-07	.2353E-06	-.5559E-06
106	.8480E-05	-.8854E-04	.4213E-05	.1030E-06	.3196E-06	-.1054E-06
107	.5216E-05	-.8815E-04	.4150E-05	-.3669E-06	.8767E-07	.3129E-06
108	.7730E-05	-.8525E-04	.5995E-05	.3202E-05	-.4190E-06	.1020E-05
109	.8325E-05	-.8631E-04	.1994E-04	.2620E-05	-.1346E-05	-.2692E-06
110	.9090E-05	-.8835E-04	.4223E-04	.3893E-05	-.1597E-05	-.1053E-06
111	.9991E-05	-.9019E-04	.6795E-04	.5018E-05	-.1766E-05	-.1383E-06
112	.1099E-04	-.9199E-04	.9437E-04	.6534E-05	-.1710E-05	-.1226E-07
113	.1165E-04	-.9543E-04	.1175E-03	.7348E-05	-.1300E-05	-.1282E-05
114	.1128E-04	-.9832E-04	.1269E-03	.7048E-05	.1239E-06	.6790E-05
115	.0000E+00	-.5300E-03	.0000E+00	-.4494E-07	.6986E-09	-.2597E-07
116	.0000E+00	.0000E+00	.0000E+00	.5903E-08	-.9981E-09	-.2687E-05
117	.0000E+00	.0000E+00	.0000E+00	.2696E-05	-.4764E-09	.3424E-08
118	.0000E+00	.0000E+00	.0000E+00	.5839E-08	.1473E-08	.2694E-05
119	.0000E+00	.0000E+00	.0000E+00	-.2685E-05	.9517E-09	.3360E-08
120	-.4340E-06	-.1320E-02	.7510E-06	-.8391E-08	.4776E-09	-.4849E-08
121	-.1159E-07	-.4420E-03	.2005E-07	.5306E-08	.2170E-09	.3066E-08
122	.0000E+00	.0000E+00	.0000E+00	-.1655E-05	.0000E+00	.0000E+00

KAISER ENGINEERS HANFORD S/N:801854 02/22/95
PAGE 31 Run ID=MN61973 08:49:52

```
============== I M A G E S  3 D ==============
= Copyright (c) 1984   Celestial Software Inc. =
===============================================
```

SOLVE DISPLACEMENTS Version 2.0 07/01/90

L

L O A D C A S E 2

GRAVITY LOAD

Node	Translations X	Translations Y	Translations Z	Rotations X	Rotations Y	Rotations Z
123	.0000E+00	.0000E+00	.0000E+00	-.5581E-05	.0000E+00	.0000E+00
124	-.1109E-04	-.2789E-04	-.3613E-04	-.1628E-05	-.5820E-06	.3745E-06
125	.1445E-04	-.2930E-04	-.1171E-03	-.5047E-05	.3587E-06	-.5342E-06
126	-.1131E-04	-.4945E-04	-.7043E-04	-.1483E-05	-.1011E-05	-.7833E-07
127	.1659E-04	-.5085E-04	-.2099E-03	-.3367E-05	.4388E-06	.3801E-07
128	-.1086E-04	-.6683E-04	-.9921E-04	-.1131E-05	-.1269E-05	-.1638E-07
129	.1845E-04	-.6819E-04	-.2525E-03	-.4945E-06	.1871E-06	.2161E-07
130	-.1003E-04	-.7969E-04	-.1148E-03	-.2734E-06	-.9220E-06	-.4336E-07
131	.1570E-04	-.8153E-04	-.2121E-03	.4210E-05	-.1532E-05	-.3954E-08
132	-.8944E-05	-.8860E-04	-.1041E-03	.1031E-05	-.8664E-06	-.3776E-07
133	.1432E-04	-.9055E-04	-.3315E-04	.8683E-05	.1710E-06	.2932E-06
134	-.6165E-05	-.8951E-04	-.5572E-04	.4762E-05	-.1561E-05	-.1837E-06
135	.1061E-04	-.9120E-04	.1155E-03	.8984E-05	.9466E-06	-.4654E-06

KAISER ENGINEERS HANFORD S/N:801854 02/22/95
PAGE 32 Run ID=MN61973 08:49:52

```
============== I M A G E S  3 D ==============
= Copyright (c) 1984   Celestial Software Inc. =
===============================================
```

SOLVE DISPLACEMENTS Version 2.0 07/01/90

L

L O A D C A S E 3

UBC SEISMIC LOAD - SN & WE DIR.

APPLIED LOAD VECTOR

Node	Fx	Fy	Fz	Mx	My	Mz
1	-.2724E+02	-.7264E+02	-.2724E+02	-.1265E+04	.2497E+03	.5993E+03
2	-.2384E+02	-.6358E+02	-.2384E+02	-.1537E+02	.0000E+00	.1537E+02
3	-.1595E+02	-.4254E+02	-.1595E+02	.0000E+00	.0000E+00	.0000E+00
4	-.1595E+02	-.4254E+02	-.1595E+02	.0000E+00	.0000E+00	.0000E+00
5	-.2122E+02	-.5657E+02	-.2122E+02	-.1537E+02	.0000E+00	.1537E+02
6	-.1809E+02	-.4825E+02	-.1809E+02	.0000E+00	.0000E+00	.0000E+00
7	-.1809E+02	-.4825E+02	-.1809E+02	.0000E+00	.0000E+00	.0000E+00
8	-.1809E+02	-.4825E+02	-.1809E+02	.0000E+00	.0000E+00	.0000E+00
9	-.1809E+02	-.4825E+02	-.1809E+02	.0000E+00	.0000E+00	.0000E+00
10	-.1809E+02	-.4825E+02	-.1809E+02	.0000E+00	.0000E+00	.0000E+00
11	-.2443E+02	-.6513E+02	-.2443E+02	-.2393E+02	.0000E+00	.2393E+02
12	-.1771E+02	-.4721E+02	-.1771E+02	.0000E+00	.0000E+00	.0000E+00
13	-.1771E+02	-.4721E+02	-.1771E+02	.0000E+00	.0000E+00	.0000E+00
14	-.1771E+02	-.4721E+02	-.1771E+02	.0000E+00	.0000E+00	.0000E+00
15	-.1771E+02	-.4721E+02	-.1771E+02	.0000E+00	.0000E+00	.0000E+00
16	-.1771E+02	-.4721E+02	-.1771E+02	.0000E+00	.0000E+00	.0000E+00
17	-.2472E+02	-.6591E+02	-.2472E+02	-.1537E+02	.0000E+00	.1537E+02
18	-.2663E+02	-.7101E+02	-.2663E+02	-.4142E+02	-.2042E+03	.5858E+03
19	-.4768E+02	-.1272E+03	-.4768E+02	.0000E+00	.0000E+00	.0000E+00
20	-.3191E+02	-.8509E+02	-.3191E+02	.0000E+00	.0000E+00	.0000E+00
21	-.3191E+02	-.8509E+02	-.3191E+02	.0000E+00	.0000E+00	.0000E+00
22	-.4243E+02	-.1131E+03	-.4243E+02	.0000E+00	.0000E+00	.0000E+00
23	-.3619E+02	-.9650E+02	-.3619E+02	.0000E+00	.0000E+00	.0000E+00
24	-.3619E+02	-.9650E+02	-.3619E+02	.0000E+00	.0000E+00	.0000E+00
25	-.3619E+02	-.9650E+02	-.3619E+02	.0000E+00	.0000E+00	.0000E+00
26	-.3619E+02	-.9650E+02	-.3619E+02	.0000E+00	.0000E+00	.0000E+00
27	-.3619E+02	-.9650E+02	-.3619E+02	.0000E+00	.0000E+00	.0000E+00
28	-.4885E+02	-.1303E+03	-.4885E+02	.0000E+00	.0000E+00	.0000E+00
29	-.3541E+02	-.9443E+02	-.3541E+02	.0000E+00	.0000E+00	.0000E+00
30	-.3541E+02	-.9443E+02	-.3541E+02	.0000E+00	.0000E+00	.0000E+00
31	-.3541E+02	-.9443E+02	-.3541E+02	.0000E+00	.0000E+00	.0000E+00
32	-.3541E+02	-.9443E+02	-.3541E+02	.0000E+00	.0000E+00	.0000E+00
33	-.3541E+02	-.9443E+02	-.3541E+02	.0000E+00	.0000E+00	.0000E+00
34	-.4943E+02	-.1318E+03	-.4943E+02	.0000E+00	.0000E+00	.0000E+00
35	-.4768E+02	-.1272E+03	-.4768E+02	.0000E+00	.0000E+00	.0000E+00

========== I M A G E S 3 D ==========
= Copyright (c) 1984 Celestial Software Inc. =
==========

SOLVE DISPLACEMENTS Version 2.0 07/01/90

L

L O A D C A S E 3

UBC SEISMIC LOAD - SN & WE DIR.

APPLIED LOAD VECTOR

Node	Fx	Fy	Fz	Mx	My	Mz
36	-.3191E+02	-.8509E+02	-.3191E+02	.0000E+00	.0000E+00	.0000E+00
37	-.3191E+02	-.8509E+02	-.3191E+02	.0000E+00	.0000E+00	.0000E+00
38	-.4243E+02	-.1131E+03	-.4243E+02	.0000E+00	.0000E+00	.0000E+00
39	-.3619E+02	-.9650E+02	-.3619E+02	.0000E+00	.0000E+00	.0000E+00
40	-.3619E+02	-.9650E+02	-.3619E+02	.0000E+00	.0000E+00	.0000E+00
41	-.3619E+02	-.9650E+02	-.3619E+02	.0000E+00	.0000E+00	.0000E+00
42	-.3619E+02	-.9650E+02	-.3619E+02	.0000E+00	.0000E+00	.0000E+00
43	-.3619E+02	-.9650E+02	-.3619E+02	.0000E+00	.0000E+00	.0000E+00
44	-.4885E+02	-.1303E+03	-.4885E+02	.0000E+00	.0000E+00	.0000E+00
45	-.3541E+02	-.9443E+02	-.3541E+02	.0000E+00	.0000E+00	.0000E+00
46	-.3541E+02	-.9443E+02	-.3541E+02	.0000E+00	.0000E+00	.0000E+00
47	-.3541E+02	-.9443E+02	-.3541E+02	.0000E+00	.0000E+00	.0000E+00
48	-.3541E+02	-.9443E+02	-.3541E+02	.0000E+00	.0000E+00	.0000E+00
49	-.3541E+02	-.9443E+02	-.3541E+02	.0000E+00	.0000E+00	.0000E+00
50	-.4943E+02	-.1318E+03	-.4943E+02	.0000E+00	.0000E+00	.0000E+00
51	-.4768E+02	-.1272E+03	-.4768E+02	.0000E+00	.0000E+00	.0000E+00
52	-.3191E+02	-.8509E+02	-.3191E+02	.0000E+00	.0000E+00	.0000E+00
53	-.3191E+02	-.8509E+02	-.3191E+02	.0000E+00	.0000E+00	.0000E+00
54	-.4243E+02	-.1131E+03	-.4243E+02	.0000E+00	.0000E+00	.0000E+00
55	-.3619E+02	-.9650E+02	-.3619E+02	.0000E+00	.0000E+00	.0000E+00
56	-.3619E+02	-.9650E+02	-.3619E+02	.0000E+00	.0000E+00	.0000E+00
57	-.3619E+02	-.9650E+02	-.3619E+02	.0000E+00	.0000E+00	.0000E+00
58	-.3619E+02	-.9650E+02	-.3619E+02	.0000E+00	.0000E+00	.0000E+00
59	-.3619E+02	-.9650E+02	-.3619E+02	.0000E+00	.0000E+00	.0000E+00
60	-.4885E+02	-.1303E+03	-.4885E+02	.0000E+00	.0000E+00	.0000E+00
61	-.3541E+02	-.9443E+02	-.3541E+02	.0000E+00	.0000E+00	.0000E+00
62	-.3541E+02	-.9443E+02	-.3541E+02	.0000E+00	.0000E+00	.0000E+00
63	-.3541E+02	-.9443E+02	-.3541E+02	.0000E+00	.0000E+00	.0000E+00
64	-.3541E+02	-.9443E+02	-.3541E+02	.0000E+00	.0000E+00	.0000E+00
65	-.3541E+02	-.9443E+02	-.3541E+02	.0000E+00	.0000E+00	.0000E+00
66	-.4943E+02	-.1318E+03	-.4943E+02	.0000E+00	.0000E+00	.0000E+00
67	-.5364E+02	-.1431E+03	-.5364E+02	-.8644E+01	.0000E+00	.8644E+01
68	-.3590E+02	-.9572E+02	-.3590E+02	.0000E+00	.0000E+00	.0000E+00
69	-.3590E+02	-.9572E+02	-.3590E+02	.0000E+00	.0000E+00	.0000E+00
70	-.4773E+02	-.1273E+03	-.4773E+02	-.8644E+01	.0000E+00	.8644E+01
71	-.4071E+02	-.1086E+03	-.4071E+02	.0000E+00	.0000E+00	.0000E+00
72	-.4071E+02	-.1086E+03	-.4071E+02	.0000E+00	.0000E+00	.0000E+00
73	-.4071E+02	-.1086E+03	-.4071E+02	.0000E+00	.0000E+00	.0000E+00
74	-.4071E+02	-.1086E+03	-.4071E+02	.0000E+00	.0000E+00	.0000E+00
75	-.4071E+02	-.1086E+03	-.4071E+02	.0000E+00	.0000E+00	.0000E+00

========== I M A G E S 3 D ==========
= Copyright (c) 1984 Celestial Software Inc. =
==========

SOLVE DISPLACEMENTS Version 2.0 07/01/90

L

L O A D C A S E 3

UBC SEISMIC LOAD - SN & WE DIR.

APPLIED LOAD VECTOR

Node	Fx	Fy	Fz	Mx	My	Mz
76	-.5496E+02	-.1466E+03	-.5496E+02	-.1346E+02	.0000E+00	.1346E+02
77	-.3984E+02	-.1062E+03	-.3984E+02	.0000E+00	.0000E+00	.0000E+00
78	-.3984E+02	-.1062E+03	-.3984E+02	.0000E+00	.0000E+00	.0000E+00
79	-.3984E+02	-.1062E+03	-.3984E+02	.0000E+00	.0000E+00	.0000E+00
80	-.3984E+02	-.1062E+03	-.3984E+02	.0000E+00	.0000E+00	.0000E+00
81	-.3984E+02	-.1062E+03	-.3984E+02	.0000E+00	.0000E+00	.0000E+00
82	-.5561E+02	-.1483E+03	-.5561E+02	-.8644E+01	.0000E+00	.8644E+01
83	-.4768E+02	-.1272E+03	-.4768E+02	.1537E+02	.0000E+00	-.1537E+02
84	-.3191E+02	-.8509E+02	-.3191E+02	.0000E+00	.0000E+00	.0000E+00
85	-.3191E+02	-.8509E+02	-.3191E+02	.0000E+00	.0000E+00	.0000E+00
86	-.4910E+02	-.1309E+03	-.4910E+02	-.4686E+02	.5445E+02	-.9834E+02
87	-.3619E+02	-.9650E+02	-.3619E+02	.0000E+00	.0000E+00	.0000E+00
88	-.3619E+02	-.9650E+02	-.3619E+02	.0000E+00	.0000E+00	.0000E+00
89	-.3619E+02	-.9650E+02	-.3619E+02	.0000E+00	.0000E+00	.0000E+00
90	-.3619E+02	-.9650E+02	-.3619E+02	.0000E+00	.0000E+00	.0000E+00
91	-.3619E+02	-.9650E+02	-.3619E+02	.0000E+00	.0000E+00	.0000E+00
92	-.6357E+02	-.1695E+03	-.6357E+02	.4948E+03	-.1079E+03	-.2071E+03
93	-.3541E+02	-.9443E+02	-.3541E+02	.0000E+00	.0000E+00	.0000E+00
94	-.3541E+02	-.9443E+02	-.3541E+02	.0000E+00	.0000E+00	.0000E+00
95	-.3541E+02	-.9443E+02	-.3541E+02	.0000E+00	.0000E+00	.0000E+00
96	-.3541E+02	-.9443E+02	-.3541E+02	.0000E+00	.0000E+00	.0000E+00
97	-.3541E+02	-.9443E+02	-.3541E+02	.0000E+00	.0000E+00	.0000E+00
98	-.6766E+02	-.1804E+03	-.6766E+02	.5986E+03	-.4101E+03	.4949E+03
99	-.7090E+02	-.1891E+03	-.7090E+02	.4736E+03	.1759E+03	-.9427E+03
100	-.1717E+02	-.4579E+02	-.1717E+02	.0000E+00	-.8276E-05	.2207E-04
101	-.1717E+02	-.4579E+02	-.1717E+02	.0000E+00	.8276E-05	-.2207E-04
102	-.4625E+02	-.1233E+03	-.4625E+02	-.1036E+04	.7618E+03	-.9953E+03
103	-.1948E+02	-.5194E+02	-.1948E+02	.0000E+00	.0000E+00	.0000E+00
104	-.1948E+02	-.5194E+02	-.1948E+02	.0000E+00	.0000E+00	.0000E+00
105	-.1948E+02	-.5194E+02	-.1948E+02	.0000E+00	.0000E+00	.0000E+00
106	-.1948E+02	-.5194E+02	-.1948E+02	.0000E+00	.0000E+00	.0000E+00
107	-.1948E+02	-.5194E+02	-.1948E+02	.0000E+00	.0000E+00	.0000E+00
108	-.4352E+02	-.1161E+03	-.4352E+02	.8341E+03	-.4327E+03	.3199E+03
109	-.1906E+02	-.5082E+02	-.1906E+02	.0000E+00	.0000E+00	.0000E+00
110	-.1906E+02	-.5082E+02	-.1906E+02	.0000E+00	-.1470E-04	.3919E-04
111	-.1906E+02	-.5082E+02	-.1906E+02	.0000E+00	.4409E-04	-.1176E-03
112	-.1906E+02	-.5082E+02	-.1906E+02	.0000E+00	-.1029E-03	.2743E-03
113	-.1906E+02	-.5082E+02	-.1906E+02	.0000E+00	.1029E-03	-.2743E-03
114	-.7665E+02	-.2044E+03	-.7665E+02	.1075E+04	-.5506E+03	.3936E+03
115	-.1016E+04	-.2708E+04	-.1016E+04	.1677E+05	.4635E+03	-.1800E+05

========== I M A G E S 3 D ==========
= Copyright (c) 1984 Celestial Software Inc. =
==========

SOLVE DISPLACEMENTS Version 2.0 07/01/90

L

L O A D C A S E 3

UBC SEISMIC LOAD - SN & WE DIR.

APPLIED LOAD VECTOR

Node	Fx	Fy	Fz	Mx	My	Mz
116	-.2585E+03	-.6893E+03	-.2585E+03	-.4221E+04	.9047E+03	.1808E+04
117	-.2585E+03	-.6893E+03	-.2585E+03	-.1808E+04	-.9047E+03	.4221E+04
118	-.2585E+03	-.6893E+03	-.2585E+03	-.4221E+04	-.9047E+03	.6633E+04
119	-.2585E+03	-.6893E+03	-.2585E+03	-.6633E+04	.9047E+03	.4221E+04
120	-.1147E+05	-.3058E+05	-.1147E+05	.3416E+03	.0000E+00	-.3416E+03
121	-.2736E+03	-.7297E+03	-.2736E+03	-.1216E+04	.0000E+00	.1216E+04
122	-.1586E+02	-.4231E+02	-.1586E+02	-.1537E+02	.0000E+00	.1537E+02
123	-.1586E+02	-.4231E+02	-.1586E+02	-.1537E+02	.0000E+00	.1537E+02
124	-.3173E+02	-.8461E+02	-.3173E+02	.0000E+00	.0000E+00	.0000E+00
125	-.3173E+02	-.8461E+02	-.3173E+02	.0000E+00	.0000E+00	.0000E+00
126	-.3173E+02	-.8461E+02	-.3173E+02	.0000E+00	.0000E+00	.0000E+00
127	-.3173E+02	-.8461E+02	-.3173E+02	.0000E+00	.0000E+00	.0000E+00
128	-.3173E+02	-.8461E+02	-.3173E+02	.0000E+00	.0000E+00	.0000E+00
129	-.3173E+02	-.8461E+02	-.3173E+02	.0000E+00	.0000E+00	.0000E+00
130	-.3570E+02	-.9519E+02	-.3570E+02	-.8644E+01	.0000E+00	.8644E+01
131	-.3570E+02	-.9519E+02	-.3570E+02	-.8644E+01	.0000E+00	.8644E+01
132	-.3173E+02	-.8461E+02	-.3173E+02	.2401E+02	.0000E+00	-.2401E+02
133	-.3173E+02	-.8461E+02	-.3173E+02	.1537E+02	.0000E+00	-.1537E+02
134	-.1571E+02	-.4189E+02	-.1571E+02	.0000E+00	.1270E+02	-.3387E+02
135	-.1571E+02	-.4189E+02	-.1571E+02	.8644E+01	-.1270E+02	.2522E+02

========== I M A G E S 3 D ==========
= Copyright (c) 1984 Celestial Software Inc. =
==========

SOLVE DISPLACEMENTS Version 2.0 07/01/90

L

L O A D C A S E 3

UBC SEISMIC LOAD - SN & WE DIR.

DISPLACEMENTS

	Translations			/ Rotations		
Node	X	Y	Z	/ X	Y	Z
1	.0000E+00	.0000E+00	.0000E+00	/ -.2906E-03	-.2831E-04	.1448E-03
2	.0000E+00	.0000E+00	.0000E+00	/ -.2820E-03	.0000E+00	.0000E+00
3	.0000E+00	.0000E+00	.0000E+00	/ -.1879E-03	.0000E+00	.0000E+00
4	.0000E+00	.0000E+00	.0000E+00	/ -.7067E-04	.0000E+00	.0000E+00
5	.0000E+00	.0000E+00	.0000E+00	/ .0000E+00	.0000E+00	.0000E+00
6	.0000E+00	.0000E+00	.0000E+00	/ .0000E+00	.0000E+00	.4764E-04
7	.0000E+00	.0000E+00	.0000E+00	/ .0000E+00	.0000E+00	.1474E-03
8	.0000E+00	.0000E+00	.0000E+00	/ .0000E+00	.0000E+00	.1775E-03
9	.0000E+00	.0000E+00	.0000E+00	/ .0000E+00	.0000E+00	.1432E-03
10	.0000E+00	.0000E+00	.0000E+00	/ .0000E+00	.0000E+00	.4555E-04
11	.0000E+00	.0000E+00	.0000E+00	/ .0000E+00	.0000E+00	.0000E+00
12	.0000E+00	.0000E+00	.0000E+00	/ -.1043E-03	.0000E+00	.0000E+00
13	.0000E+00	.0000E+00	.0000E+00	/ -.2893E-03	.0000E+00	.0000E+00
14	.0000E+00	.0000E+00	.0000E+00	/ -.4239E-03	.0000E+00	.0000E+00
15	.0000E+00	.0000E+00	.0000E+00	/ -.5010E-03	.0000E+00	.0000E+00
16	.0000E+00	.0000E+00	.0000E+00	/ -.4885E-03	.0000E+00	.0000E+00
17	.0000E+00	.0000E+00	.0000E+00	/ -.4415E-03	.0000E+00	.0000E+00
18	.0000E+00	.0000E+00	.0000E+00	/ -.4517E-04	-.1034E-03	.4717E-04
19	-.6905E-04	-.4588E-04	-.5690E-02	/ -.2348E-03	-.1164E-03	.4631E-05
20	-.6490E-04	-.2120E-04	-.3724E-02	/ -.1505E-03	-.1713E-03	.0000E+00
21	-.6478E-04	.5742E-05	-.1376E-02	/ -.5480E-04	-.1720E-03	.0000E+00
22	-.7154E-04	.4926E-04	-.6409E-04	/ -.5261E-05	-.1930E-04	.6130E-05
23	-.9374E-03	.1048E-04	-.5710E-04	/ -.3786E-04	.1303E-03	.0000E+00
24	-.2693E-02	-.7869E-05	-.5706E-04	/ -.9700E-04	.9594E-04	.0000E+00
25	-.3421E-02	-.2201E-04	-.5937E-04	/ -.1333E-03	-.2050E-05	.0000E+00
26	-.2629E-02	-.3587E-04	-.6321E-04	/ -.9539E-04	-.1000E-03	.0000E+00
27	-.8517E-03	-.5293E-04	-.7017E-04	/ -.3265E-04	-.1291E-03	.0000E+00
28	-.7960E-04	-.9301E-04	-.8606E-04	/ -.6571E-05	.3017E-04	.5044E-05
29	-.6483E-04	-.5627E-04	-.2054E-02	/ -.8295E-04	.2284E-03	.0000E+00
30	-.5813E-04	-.4234E-04	-.5511E-02	/ -.2113E-03	.2271E-03	.0000E+00
31	-.5401E-04	-.3238E-04	-.8335E-02	/ -.3335E-03	.1451E-03	.0000E+00
32	-.5070E-04	-.2393E-04	-.9723E-02	/ -.3823E-03	.3791E-04	.0000E+00
33	-.4775E-04	-.1480E-04	-.9621E-02	/ -.3861E-03	-.5133E-04	.0000E+00
34	-.4553E-04	-.3767E-05	-.8703E-02	/ -.3482E-03	-.6939E-04	.2900E-05
35	-.1798E-03	-.8979E-04	-.9641E-02	/ -.1242E-03	-.2073E-03	.5421E-05
36	-.1747E-03	-.4066E-04	-.6194E-02	/ -.7402E-04	-.2969E-03	.0000E+00
37	-.1751E-03	.1082E-04	-.2274E-02	/ -.2677E-04	-.2762E-03	.0000E+00
38	-.1786E-03	.7255E-04	-.1463E-03	/ -.3063E-05	-.3423E-04	.3942E-05
39	-.1461E-02	.2162E-04	-.1409E-03	/ -.9694E-05	.1988E-03	.0000E+00
40	-.4222E-02	-.1426E-04	-.1382E-03	/ -.4209E-04	.1568E-03	.0000E+00

HNF-2467, Rev.0

========== I M A G E S 3 D ==========
= Copyright (c) 1984 Celestial Software Inc. =
==========

SOLVE DISPLACEMENTS Version 2.0 07/01/90

L

L O A D C A S E 3

UBC SEISMIC LOAD - SN & WE DIR.

Node	Translations X	Translations Y	Translations Z	Rotations X	Rotations Y	Rotations Z
41	-.5393E-02	-.4208E-04	-.1402E-03	-.4580E-04	-.5638E-05	.0000E+00
42	-.4091E-02	-.6885E-04	-.1462E-03	-.3762E-04	-.1623E-03	.0000E+00
43	-.1300E-02	-.1029E-03	-.1568E-03	-.7982E-05	-.1973E-03	.0000E+00
44	-.1534E-03	-.1486E-03	-.1695E-03	-.2139E-05	.5017E-04	.2592E-05
45	-.1409E-03	-.1093E-03	-.3279E-02	-.2825E-04	.3589E-03	.0000E+00
46	-.1296E-03	-.8186E-04	-.8787E-02	-.8668E-04	.3667E-03	.0000E+00
47	-.1219E-03	-.6299E-04	-.1334E-01	-.1209E-03	.2329E-03	.0000E+00
48	-.1165E-03	-.4607E-04	-.1556E-01	-.1484E-03	.6035E-04	.0000E+00
49	-.1130E-03	-.2843E-04	-.1539E-01	-.1385E-03	-.8244E-04	.0000E+00
50	-.1116E-03	-.5743E-05	-.1390E-01	-.1236E-03	-.1142E-03	.3243E-05
51	-.3068E-03	-.1215E-03	-.1093E-01	.6676E-05	-.2474E-03	.6086E-05
52	-.3039E-03	-.5713E-04	-.6924E-02	.7687E-05	-.3389E-03	.0000E+00
53	-.3041E-03	.8302E-05	-.2538E-02	.2667E-05	-.3024E-03	.0000E+00
54	-.3064E-03	.8107E-04	-.2323E-03	-.4377E-05	-.3395E-04	.7729E-05
55	-.1718E-02	.2535E-04	-.2292E-03	-.1383E-04	.2150E-03	.0000E+00
56	-.4700E-02	-.1960E-04	-.2278E-03	-.1274E-05	.1695E-03	.0000E+00
57	-.5979E-02	-.5800E-04	-.2285E-03	-.7553E-05	-.4847E-05	.0000E+00
58	-.4531E-02	-.9611E-04	-.2330E-03	-.2270E-05	-.1817E-03	.0000E+00
59	-.1461E-02	-.1366E-03	-.2411E-03	-.6813E-05	-.2141E-03	.0000E+00
60	-.2190E-03	-.1845E-03	-.2497E-03	-.4918E-05	.5485E-04	.3147E-05
61	-.2104E-03	-.1460E-03	-.3569E-02	.1629E-05	.3817E-03	.0000E+00
62	-.2016E-03	-.1152E-03	-.9410E-02	.3023E-04	.3880E-03	.0000E+00
63	-.1945E-03	-.8901E-04	-.1409E-01	.5169E-04	.2293E-03	.0000E+00
64	-.1896E-03	-.6543E-04	-.1608E-01	.1010E-03	.3306E-04	.0000E+00
65	-.1864E-03	-.3990E-04	-.1557E-01	.1221E-03	-.1006E-03	.0000E+00
66	-.1856E-03	-.1022E-04	-.1383E-01	.1298E-03	-.1290E-03	.3159E-05
67	-.4419E-03	-.1439E-03	-.9388E-02	.1338E-03	-.2298E-03	.5851E-05
68	-.4388E-03	-.7115E-04	-.5882E-02	.8698E-04	-.2832E-03	.0000E+00
69	-.4377E-03	.3507E-05	-.2215E-02	.2678E-04	-.2529E-03	.0000E+00
70	-.4401E-03	.8034E-04	-.3194E-03	-.3734E-05	-.2356E-04	.4058E-05
71	-.1777E-02	.2328E-04	-.3189E-03	.8641E-05	.1954E-03	.0000E+00
72	-.4529E-02	-.2380E-04	-.3162E-03	.1663E-04	.1589E-03	.0000E+00
73	-.5683E-02	-.6824E-04	-.3149E-03	.3461E-04	-.1003E-04	.0000E+00
74	-.4311E-02	-.1125E-03	-.3157E-03	.2213E-04	-.1668E-03	.0000E+00
75	-.1481E-02	-.1601E-03	-.3187E-03	.5175E-05	-.1976E-03	.0000E+00
76	-.2800E-03	-.2056E-03	-.3273E-03	-.1832E-05	.4365E-04	.2367E-05
77	-.2731E-03	-.1709E-03	-.3097E-02	.4153E-04	.3206E-03	.0000E+00
78	-.2679E-03	-.1376E-03	-.7941E-02	.1030E-03	.3173E-03	.0000E+00
79	-.2646E-03	-.1074E-03	-.1156E-01	.1789E-03	.1598E-03	.0000E+00
80	-.2632E-03	-.7926E-04	-.1243E-01	.2311E-03	-.4573E-04	.0000E+00
81	-.2629E-03	-.5111E-04	-.1080E-01	.3116E-03	-.1679E-03	.0000E+00

========== I M A G E S 3 D ==========
= Copyright (c) 1984 Celestial Software Inc. =
==========

SOLVE DISPLACEMENTS Version 2.0 07/01/90

L

L O A D C A S E 3

UBC SEISMIC LOAD - SN & WE DIR.

Node	Translations X	Translations Y	Translations Z	Rotations X	Rotations Y	Rotations Z
82	-.2605E-03	-.1594E-04	-.8808E-02	.3261E-03	-.9433E-04	.4661E-05
83	-.6122E-03	-.1641E-03	-.4428E-02	.2263E-03	-.1493E-03	.8466E-05
84	-.6078E-03	-.8592E-04	-.2559E-02	.1547E-03	-.1241E-03	.0000E+00
85	-.6035E-03	-.7483E-05	-.1064E-02	.5696E-04	-.9450E-04	.0000E+00
86	-.5938E-03	.7332E-04	-.4321E-03	-.3942E-05	.2437E-05	.7632E-05
87	-.1725E-02	.2469E-04	-.4214E-03	-.4916E-05	.1427E-03	.0000E+00
88	-.3441E-02	-.2563E-04	-.4166E-03	.6264E-04	.7913E-04	.0000E+00
89	-.3946E-02	-.7383E-04	-.4149E-03	.9142E-04	-.1403E-04	.0000E+00
90	-.3025E-02	-.1202E-03	-.4139E-03	.7147E-04	-.1049E-03	.0000E+00
91	-.1211E-02	-.1678E-03	-.4102E-03	.1442E-04	-.1296E-03	.0000E+00
92	-.3392E-03	-.2229E-03	-.3977E-03	-.3508E-05	.1716E-04	.2010E-05
93	-.3406E-03	-.1860E-03	-.1900E-02	.4549E-04	.1805E-03	.0000E+00
94	-.3414E-03	-.1509E-03	-.4404E-02	.1543E-03	.1503E-03	.0000E+00
95	-.3424E-03	-.1182E-03	-.5910E-02	.2317E-03	.4834E-04	.0000E+00
96	-.3450E-03	-.8613E-04	-.5726E-02	.2561E-03	-.7243E-04	.0000E+00
97	-.3518E-03	-.5476E-04	-.3698E-02	.2054E-03	-.1956E-03	.0000E+00
98	-.3653E-03	-.2360E-04	-.1763E-02	.1815E-03	-.5810E-04	-.6642E-06
99	-.7128E-03	-.1747E-03	-.9494E-03	.1938E-03	-.9149E-04	-.6872E-05
100	-.7099E-03	-.9126E-04	-.1288E-03	.1398E-03	-.3044E-04	.7665E-05
101	-.7099E-03	-.1037E-04	-.1134E-04	.7111E-04	.1247E-04	.6126E-05
102	-.7169E-03	.6945E-04	-.4612E-03	-.1471E-05	.5311E-04	.2193E-05
103	-.1685E-02	.2609E-04	-.4697E-03	-.3286E-05	.7063E-04	-.9193E-05
104	-.2576E-02	.2579E-04	-.4707E-03	-.3274E-05	.4214E-04	-.4184E-04
105	-.2749E-02	.7474E-04	-.4697E-03	-.3080E-05	-.1993E-04	-.5345E-04
106	-.2032E-02	.1213E-03	-.4701E-03	-.2906E-05	-.7152E-04	-.4842E-04
107	-.9075E-03	-.1674E-03	-.4752E-03	-.3436E-05	-.7076E-04	-.2241E-04
108	-.3807E-03	-.2287E-03	-.4911E-03	-.4209E-05	.5701E-05	.1670E-05
109	-.3811E-03	-.1875E-03	-.1108E-02	.5006E-04	.7323E-04	.2670E-05
110	-.3814E-03	-.1528E-03	-.2202E-02	.1122E-03	.6809E-04	.2190E-05
111	-.3826E-03	-.1195E-03	-.2783E-02	.1472E-03	.7473E-05	.2178E-05
112	-.3849E-03	-.8650E-04	-.2336E-02	.1543E-03	-.6617E-04	.2239E-05
113	-.3870E-03	-.5191E-04	-.1041E-02	.1160E-03	-.1019E-03	.2194E-05
114	-.3852E-03	-.2931E-04	.3973E-03	.8726E-04	-.8678E-04	-.5355E-06
115	.0000E+00	-.5303E-03	.0000E+00	.7996E-05	.2091E-07	-.8112E-05
116	.0000E+00	.0000E+00	.0000E+00	-.5562E-05	.3667E-06	.2483E-05
117	.0000E+00	.0000E+00	.0000E+00	-.2469E-05	-.3557E-06	.5579E-05
118	.0000E+00	.0000E+00	.0000E+00	-.5564E-05	-.3525E-06	.7865E-05
119	.0000E+00	.0000E+00	.0000E+00	-.7851E-05	.3699E-06	.5577E-05
120	-.2207E-02	-.1320E-02	-.2205E-02	.1689E-05	.1430E-07	-.1711E-05
121	-.4598E-04	-.4421E-03	-.4593E-04	-.7509E-05	.6494E-08	.7523E-05
122	.0000E+00	.0000E+00	.0000E+00	-.3804E-03	.0000E+00	.0000E+00

========== I M A G E S 3 D ==========
= Copyright (c) 1984 Celestial Software Inc. =
==========

SOLVE DISPLACEMENTS Version 2.0 07/01/90

L

L O A D C A S E 3

UBC SEISMIC LOAD - SN & WE DIR.

Node	Translations X	Translations Y	Translations Z	Rotations X	Rotations Y	Rotations Z
123	.0000E+00	.0000E+00	.0000E+00	-.3866E-03	.0000E+00	.0000E+00
124	-.8993E-04	-.1041E-03	-.7769E-02	-.3240E-03	-.9155E-04	.5117E-05
125	-.4847E-04	.2800E-04	-.7627E-02	-.3048E-03	-.3803E-04	.2967E-05
126	-.1924E-03	-.1758E-03	-.1337E-01	-.1836E-03	-.1651E-03	.4995E-05
127	-.1125E-03	.4106E-04	-.1214E-01	-.1044E-03	-.6164E-04	.3044E-05
128	-.3158E-03	-.2252E-03	-.1549E-01	-.8982E-05	-.2080E-03	.5849E-05
129	-.1844E-03	.4485E-04	-.1197E-01	.1190E-03	-.5610E-04	.3443E-05
130	-.4479E-03	-.2571E-03	-.1389E-01	.1535E-03	-.2203E-03	.6405E-05
131	-.2635E-03	.4291E-04	-.7929E-02	.2461E-03	.6064E-05	.3767E-05
132	-.6171E-03	-.2765E-03	-.8015E-02	.2727E-03	-.2100E-03	.5286E-05
133	-.3528E-03	.2941E-04	-.1507E-02	.2213E-03	.3059E-04	.2373E-05
134	-.7100E-03	-.2765E-03	-.3506E-02	.2722E-03	-.1608E-03	.8745E-05
135	-.3953E-03	.2483E-04	.1732E-02	.1692E-03	-.4532E-04	.3550E-05

========== I M A G E S 3 D ==========
= Copyright (c) 1984 Celestial Software Inc. =
==========

SOLVE DISPLACEMENTS Version 2.0 07/01/90

L

L O A D C A S E 4

UBC SEISMIC LOAD - SN & EW DIR.

APPLIED LOAD VECTOR

Node	Fx	Fy	Fz	Mx	My	Mz
1	-.2724E+02	-.7264E+02	.2724E+02	-.6659E+02	.2497E+03	.5993E+03
2	-.2384E+02	-.6358E+02	.2384E+02	.1537E+02	.0000E+00	.1537E+02
3	-.1595E+02	-.4254E+02	.1595E+02	.0000E+00	.0000E+00	.0000E+00
4	-.1595E+02	-.4254E+02	.1595E+02	.0000E+00	.0000E+00	.0000E+00
5	-.2122E+02	-.5657E+02	.2122E+02	.1537E+02	.0000E+00	.1537E+02
6	-.1809E+02	-.4825E+02	.1809E+02	.0000E+00	.0000E+00	.0000E+00
7	-.1809E+02	-.4825E+02	.1809E+02	.0000E+00	.0000E+00	.0000E+00
8	-.1809E+02	-.4825E+02	.1809E+02	.0000E+00	.0000E+00	.0000E+00
9	-.1809E+02	-.4825E+02	.1809E+02	.0000E+00	.0000E+00	.0000E+00
10	-.1809E+02	-.4825E+02	.1809E+02	.0000E+00	.0000E+00	.0000E+00
11	-.2443E+02	-.6513E+02	.2443E+02	.2393E+02	.0000E+00	.2393E+02
12	-.1771E+02	-.4721E+02	.1771E+02	.0000E+00	.0000E+00	.0000E+00
13	-.1771E+02	-.4721E+02	.1771E+02	.0000E+00	.0000E+00	.0000E+00
14	-.1771E+02	-.4721E+02	.1771E+02	.0000E+00	.0000E+00	.0000E+00
15	-.1771E+02	-.4721E+02	.1771E+02	.0000E+00	.0000E+00	.0000E+00
16	-.1771E+02	-.4721E+02	.1771E+02	.0000E+00	.0000E+00	.0000E+00
17	-.2472E+02	-.6591E+02	.2472E+02	.1537E+02	.0000E+00	.1537E+02
18	-.2663E+02	-.7101E+02	.2663E+02	.1130E+04	-.2042E+03	.5858E+03
19	-.4768E+02	-.1272E+03	.4768E+02	.0000E+00	.0000E+00	.0000E+00
20	-.3191E+02	-.8509E+02	.3191E+02	.0000E+00	.0000E+00	.0000E+00
21	-.3191E+02	-.8509E+02	.3191E+02	.0000E+00	.0000E+00	.0000E+00
22	-.4243E+02	-.1131E+03	.4243E+02	.0000E+00	.0000E+00	.0000E+00
23	-.3619E+02	-.9650E+02	.3619E+02	.0000E+00	.0000E+00	.0000E+00
24	-.3619E+02	-.9650E+02	.3619E+02	.0000E+00	.0000E+00	.0000E+00
25	-.3619E+02	-.9650E+02	.3619E+02	.0000E+00	.0000E+00	.0000E+00
26	-.3619E+02	-.9650E+02	.3619E+02	.0000E+00	.0000E+00	.0000E+00
27	-.3619E+02	-.9650E+02	.3619E+02	.0000E+00	.0000E+00	.0000E+00
28	-.4885E+02	-.1303E+03	.4885E+02	.0000E+00	.0000E+00	.0000E+00
29	-.3541E+02	-.9443E+02	.3541E+02	.0000E+00	.0000E+00	.0000E+00
30	-.3541E+02	-.9443E+02	.3541E+02	.0000E+00	.0000E+00	.0000E+00
31	-.3541E+02	-.9443E+02	.3541E+02	.0000E+00	.0000E+00	.0000E+00
32	-.3541E+02	-.9443E+02	.3541E+02	.0000E+00	.0000E+00	.0000E+00
33	-.3541E+02	-.9443E+02	.3541E+02	.0000E+00	.0000E+00	.0000E+00
34	-.4943E+02	-.1318E+03	.4943E+02	.0000E+00	.0000E+00	.0000E+00
35	-.4768E+02	-.1272E+03	.4768E+02	.0000E+00	.0000E+00	.0000E+00

========== I M A G E S 3 D ==========
= Copyright (c) 1984 Celestial Software Inc. =
==========

SOLVE DISPLACEMENTS Version 2.0 07/01/90

L

L O A D C A S E 4

UBC SEISMIC LOAD - SN & EW DIR.

APPLIED LOAD VECTOR

Node	Fx	Fy	Fz	Mx	My	Mz
36	-.3191E+02	-.8509E+02	.3191E+02	.0000E+00	.0000E+00	.0000E+00
37	-.3191E+02	-.8509E+02	.3191E+02	.0000E+00	.0000E+00	.0000E+00
38	-.4243E+02	-.1131E+03	.4243E+02	.0000E+00	.0000E+00	.0000E+00
39	-.3619E+02	-.9650E+02	.3619E+02	.0000E+00	.0000E+00	.0000E+00
40	-.3619E+02	-.9650E+02	.3619E+02	.0000E+00	.0000E+00	.0000E+00
41	-.3619E+02	-.9650E+02	.3619E+02	.0000E+00	.0000E+00	.0000E+00
42	-.3619E+02	-.9650E+02	.3619E+02	.0000E+00	.0000E+00	.0000E+00
43	-.3619E+02	-.9650E+02	.3619E+02	.0000E+00	.0000E+00	.0000E+00
44	-.4885E+02	-.1303E+03	.4885E+02	.0000E+00	.0000E+00	.0000E+00
45	-.3541E+02	-.9443E+02	.3541E+02	.0000E+00	.0000E+00	.0000E+00
46	-.3541E+02	-.9443E+02	.3541E+02	.0000E+00	.0000E+00	.0000E+00
47	-.3541E+02	-.9443E+02	.3541E+02	.0000E+00	.0000E+00	.0000E+00
48	-.3541E+02	-.9443E+02	.3541E+02	.0000E+00	.0000E+00	.0000E+00
49	-.3541E+02	-.9443E+02	.3541E+02	.0000E+00	.0000E+00	.0000E+00
50	-.4943E+02	-.1318E+03	.4943E+02	.0000E+00	.0000E+00	.0000E+00
51	-.4768E+02	-.1272E+03	.4768E+02	.0000E+00	.0000E+00	.0000E+00
52	-.3191E+02	-.8509E+02	.3191E+02	.0000E+00	.0000E+00	.0000E+00
53	-.3191E+02	-.8509E+02	.3191E+02	.0000E+00	.0000E+00	.0000E+00
54	-.4243E+02	-.1131E+03	.4243E+02	.0000E+00	.0000E+00	.0000E+00
55	-.3619E+02	-.9650E+02	.3619E+02	.0000E+00	.0000E+00	.0000E+00
56	-.3619E+02	-.9650E+02	.3619E+02	.0000E+00	.0000E+00	.0000E+00
57	-.3619E+02	-.9650E+02	.3619E+02	.0000E+00	.0000E+00	.0000E+00
58	-.3619E+02	-.9650E+02	.3619E+02	.0000E+00	.0000E+00	.0000E+00
59	-.3619E+02	-.9650E+02	.3619E+02	.0000E+00	.0000E+00	.0000E+00
60	-.4885E+02	-.1303E+03	.4885E+02	.0000E+00	.0000E+00	.0000E+00
61	-.3541E+02	-.9443E+02	.3541E+02	.0000E+00	.0000E+00	.0000E+00
62	-.3541E+02	-.9443E+02	.3541E+02	.0000E+00	.0000E+00	.0000E+00
63	-.3541E+02	-.9443E+02	.3541E+02	.0000E+00	.0000E+00	.0000E+00
64	-.3541E+02	-.9443E+02	.3541E+02	.0000E+00	.0000E+00	.0000E+00
65	-.3541E+02	-.9443E+02	.3541E+02	.0000E+00	.0000E+00	.0000E+00
66	-.4943E+02	-.1318E+03	.4943E+02	.0000E+00	.0000E+00	.0000E+00
67	-.5364E+02	-.1431E+03	.5364E+02	.8644E+01	.0000E+00	.8644E+01
68	-.3590E+02	-.9572E+02	.3590E+02	.0000E+00	.0000E+00	.0000E+00
69	-.3590E+02	-.9572E+02	.3590E+02	.0000E+00	.0000E+00	.0000E+00
70	-.4773E+02	-.1273E+03	.4773E+02	.8644E+01	.0000E+00	.8644E+01
71	-.4071E+02	-.1086E+03	.4071E+02	.0000E+00	.0000E+00	.0000E+00
72	-.4071E+02	-.1086E+03	.4071E+02	.0000E+00	.0000E+00	.0000E+00
73	-.4071E+02	-.1086E+03	.4071E+02	.0000E+00	.0000E+00	.0000E+00
74	-.4071E+02	-.1086E+03	.4071E+02	.0000E+00	.0000E+00	.0000E+00
75	-.4071E+02	-.1086E+03	.4071E+02	.0000E+00	.0000E+00	.0000E+00

========== I M A G E S 3 D ==========
= Copyright (c) 1984 Celestial Software Inc. =
==========

SOLVE DISPLACEMENTS Version 2.0 07/01/90

L

L O A D C A S E 4

UBC SEISMIC LOAD - SN & EW DIR.

APPLIED LOAD VECTOR

Node	Fx	Fy	Fz	Mx	My	Mz
76	-.5496E+02	-.1466E+03	.5496E+02	.1346E+02	.0000E+00	.1346E+02
77	-.3984E+02	-.1062E+03	.3984E+02	.0000E+00	.0000E+00	.0000E+00
78	-.3984E+02	-.1062E+03	.3984E+02	.0000E+00	.0000E+00	.0000E+00
79	-.3984E+02	-.1062E+03	.3984E+02	.0000E+00	.0000E+00	.0000E+00
80	-.3984E+02	-.1062E+03	.3984E+02	.0000E+00	.0000E+00	.0000E+00
81	-.3984E+02	-.1062E+03	.3984E+02	.0000E+00	.0000E+00	.0000E+00
82	-.5561E+02	-.1483E+03	.5561E+02	.8644E+01	.0000E+00	.8644E+01
83	-.4768E+02	-.1272E+03	.4768E+02	-.1537E+02	.0000E+00	-.1537E+02
84	-.3191E+02	-.8509E+02	.3191E+02	.0000E+00	.0000E+00	.0000E+00
85	-.3191E+02	-.8509E+02	.3191E+02	.0000E+00	.0000E+00	.0000E+00
86	-.4910E+02	-.1309E+03	.4910E+02	-.7759E+02	-.7779E+01	-.9834E+02
87	-.3619E+02	-.9650E+02	.3619E+02	.0000E+00	.0000E+00	.0000E+00
88	-.3619E+02	-.9650E+02	.3619E+02	.0000E+00	.0000E+00	.0000E+00
89	-.3619E+02	-.9650E+02	.3619E+02	.0000E+00	.0000E+00	.0000E+00
90	-.3619E+02	-.9650E+02	.3619E+02	.0000E+00	.0000E+00	.0000E+00
91	-.3619E+02	-.9650E+02	.3619E+02	.0000E+00	.0000E+00	.0000E+00
92	-.6357E+02	-.1695E+03	.6357E+02	.4470E+03	-.2453E+03	-.2071E+03
93	-.3541E+02	-.9443E+02	.3541E+02	.0000E+00	.0000E+00	.0000E+00
94	-.3541E+02	-.9443E+02	.3541E+02	.0000E+00	.0000E+00	.0000E+00
95	-.3541E+02	-.9443E+02	.3541E+02	.0000E+00	.0000E+00	.0000E+00
96	-.3541E+02	-.9443E+02	.3541E+02	.0000E+00	.0000E+00	.0000E+00
97	-.3541E+02	-.9443E+02	.3541E+02	.0000E+00	.0000E+00	.0000E+00
98	-.6766E+02	-.1804E+03	.6766E+02	.5678E+03	-.2734E+02	.4949E+03
99	-.7090E+02	-.1891E+03	.7090E+02	-.7423E+03	-.7514E+02	-.9427E+03
100	-.1717E+02	-.4579E+02	.1717E+02	.0000E+00	.8276E-05	.2207E-04
101	-.1717E+02	-.4579E+02	.1717E+02	.0000E+00	-.8276E-05	-.2207E-04
102	-.4625E+02	-.1233E+03	.4625E+02	-.1053E+04	.2182E+02	-.9953E+03
103	-.1948E+02	-.5194E+02	.1948E+02	.0000E+00	.0000E+00	.0000E+00
104	-.1948E+02	-.5194E+02	.1948E+02	.0000E+00	.0000E+00	.0000E+00
105	-.1948E+02	-.5194E+02	.1948E+02	.0000E+00	.0000E+00	.0000E+00
106	-.1948E+02	-.5194E+02	.1948E+02	.0000E+00	.0000E+00	.0000E+00
107	-.1948E+02	-.5194E+02	.1948E+02	.0000E+00	.0000E+00	.0000E+00
108	-.4352E+02	-.1161E+03	.4352E+02	.8071E+03	-.1827E+03	.3199E+03
109	-.1906E+02	-.5082E+02	.1906E+02	.0000E+00	.0000E+00	.0000E+00
110	-.1906E+02	-.5082E+02	.1906E+02	.0000E+00	.1470E-04	.3919E-04
111	-.1906E+02	-.5082E+02	.1906E+02	.0000E+00	-.4409E-04	-.1176E-03
112	-.1906E+02	-.5082E+02	.1906E+02	.0000E+00	.1029E-03	.2743E-03
113	-.1906E+02	-.5082E+02	.1906E+02	.0000E+00	-.1029E-03	-.2743E-03
114	-.7665E+02	-.2044E+03	.7665E+02	-.1144E+03	.1905E+03	.3936E+03
115	-.1016E+04	-.2708E+04	.1016E+04	-.1875E+05	.2804E+03	-.1800E+05

========== I M A G E S 3 D ==========
= Copyright (c) 1984 Celestial Software Inc. =
==========

SOLVE DISPLACEMENTS Version 2.0 07/01/90

L

L O A D C A S E 4

UBC SEISMIC LOAD - SN & EW DIR.

APPLIED LOAD VECTOR

Node	Fx	Fy	Fz	Mx	My	Mz
116	-.2585E+03	-.6893E+03	.2585E+03	.4221E+04	-.9047E+03	.1808E+04
117	-.2585E+03	-.6893E+03	.2585E+03	.6633E+04	-.9047E+03	.4221E+04
118	-.2585E+03	-.6893E+03	.2585E+03	.4221E+04	.9047E+03	.6633E+04
119	-.2585E+03	-.6893E+03	.2585E+03	.1808E+04	.9047E+03	.4221E+04
120	-.1147E+05	-.3058E+05	.1147E+05	-.3416E+03	.0000E+00	-.3416E+03
121	-.2736E+03	-.7297E+03	.2736E+03	.1216E+04	.0000E+00	.1216E+04
122	-.1586E+02	-.4231E+02	.1586E+02	.1537E+02	.0000E+00	.1537E+02
123	-.1586E+02	-.4231E+02	.1586E+02	.1537E+02	.0000E+00	.1537E+02
124	-.3173E+02	-.8461E+02	.3173E+02	.0000E+00	.0000E+00	.0000E+00
125	-.3173E+02	-.8461E+02	.3173E+02	.0000E+00	.0000E+00	.0000E+00
126	-.3173E+02	-.8461E+02	.3173E+02	.0000E+00	.0000E+00	.0000E+00
127	-.3173E+02	-.8461E+02	.3173E+02	.0000E+00	.0000E+00	.0000E+00
128	-.3173E+02	-.8461E+02	.3173E+02	.0000E+00	.0000E+00	.0000E+00
129	-.3173E+02	-.8461E+02	.3173E+02	.0000E+00	.0000E+00	.0000E+00
130	-.3570E+02	-.9519E+02	.3570E+02	.8644E+01	.0000E+00	.8644E+01
131	-.3570E+02	-.9519E+02	.3570E+02	.8644E+01	.0000E+00	.8644E+01
132	-.3173E+02	-.8461E+02	.3173E+02	-.2401E+02	.0000E+00	-.2401E+02
133	-.3173E+02	-.8461E+02	.3173E+02	-.1537E+02	.0000E+00	-.1537E+02
134	-.1571E+02	-.4189E+02	.1571E+02	.0000E+00	-.1270E+02	-.3387E+02
135	-.1571E+02	-.4189E+02	.1571E+02	-.8644E+01	.1270E+02	.2522E+02

========== I M A G E S 3 D ==========
= Copyright (c) 1984 Celestial Software Inc. =
==========

SOLVE DISPLACEMENTS Version 2.0 07/01/90

L

L O A D C A S E 4

UBC SEISMIC LOAD - SN & EW DIR.

DISPLACEMENTS

Node	Translations X	Translations Y	Translations Z	/	Rotations X	Rotations Y	Rotations Z
1	.0000E+00	.0000E+00	.0000E+00	/	.1206E-03	.9226E-04	.5297E-04
2	.0000E+00	.0000E+00	.0000E+00	/	.3972E-03	.0000E+00	.0000E+00
3	.0000E+00	.0000E+00	.0000E+00	/	.3187E-03	.0000E+00	.0000E+00
4	.0000E+00	.0000E+00	.0000E+00	/	.1646E-03	.0000E+00	.0000E+00
5	.0000E+00	.0000E+00	.0000E+00	/	.0000E+00	.0000E+00	.0000E+00
6	.0000E+00	.0000E+00	.0000E+00	/	.0000E+00	.0000E+00	.1897E-03
7	.0000E+00	.0000E+00	.0000E+00	/	.0000E+00	.0000E+00	.3543E-03
8	.0000E+00	.0000E+00	.0000E+00	/	.0000E+00	.0000E+00	.3940E-03
9	.0000E+00	.0000E+00	.0000E+00	/	.0000E+00	.0000E+00	.3426E-03
10	.0000E+00	.0000E+00	.0000E+00	/	.0000E+00	.0000E+00	.1769E-03
11	.0000E+00	.0000E+00	.0000E+00	/	.0000E+00	.0000E+00	.0000E+00
12	.0000E+00	.0000E+00	.0000E+00	/	.1880E-03	.0000E+00	.0000E+00
13	.0000E+00	.0000E+00	.0000E+00	/	.3962E-03	.0000E+00	.0000E+00
14	.0000E+00	.0000E+00	.0000E+00	/	.5164E-03	.0000E+00	.0000E+00
15	.0000E+00	.0000E+00	.0000E+00	/	.5678E-03	.0000E+00	.0000E+00
16	.0000E+00	.0000E+00	.0000E+00	/	.5232E-03	.0000E+00	.0000E+00
17	.0000E+00	.0000E+00	.0000E+00	/	.4514E-03	.0000E+00	.0000E+00
18	.0000E+00	.0000E+00	.0000E+00	/	.1900E-03	.6774E-04	.1365E-03
19	-.3067E-04	-.2837E-04	.8036E-02	/	.3326E-03	.9525E-04	.1519E-05
20	-.2797E-04	-.2996E-04	.6212E-02	/	.2458E-03	.1716E-03	.0000E+00
21	-.2469E-04	-.3283E-04	.3379E-02	/	.1425E-03	.2429E-03	.0000E+00
22	-.1935E-04	-.4065E-04	.6205E-04	/	.5597E-05	.2420E-03	.2563E-05
23	-.3829E-02	-.3218E-04	.5355E-04	/	-.1581E-03	.2490E-03	.0000E+00
24	-.6847E-02	-.2973E-04	.4852E-04	/	-.2678E-03	.1402E-03	.0000E+00
25	-.7881E-02	-.2788E-04	.4491E-04	/	-.3221E-03	-.6867E-05	.0000E+00
26	-.6650E-02	-.2616E-04	.4192E-04	/	-.2614E-03	-.1519E-03	.0000E+00
27	-.3557E-02	-.2408E-04	.3905E-04	/	-.1466E-03	-.2471E-03	.0000E+00
28	-.4537E-04	-.2197E-04	.3566E-04	/	.3453E-05	-.2054E-03	.3177E-05
29	-.4052E-04	-.2022E-04	.3780E-02	/	.1556E-03	-.2877E-03	.0000E+00
30	-.3666E-04	-.2011E-04	.7674E-02	/	.3010E-03	-.2254E-03	.0000E+00
31	-.3340E-04	-.1968E-04	.1024E-01	/	.4144E-03	-.1131E-03	.0000E+00
32	-.3044E-04	-.1890E-04	.1106E-01	/	.4370E-03	.5387E-05	.0000E+00
33	-.2756E-04	-.1755E-04	.1032E-01	/	.4148E-03	.9234E-04	.0000E+00
34	-.2449E-04	-.1523E-04	.8875E-02	/	.3539E-03	.9749E-04	.1468E-05
35	-.5112E-04	-.5361E-04	.1358E-01	/	.1712E-03	.1690E-03	.5238E-06
36	-.4694E-04	-.5628E-04	.1038E-01	/	.1336E-03	.2991E-03	.0000E+00
37	-.4298E-04	-.6264E-04	.5583E-02	/	.5731E-04	.4030E-03	.0000E+00
38	-.3957E-04	-.6966E-04	.1062E-03	/	-.3293E-06	.3982E-03	-.1594E-06
39	-.6285E-02	-.6302E-04	.9898E-04	/	-.6490E-04	.4072E-03	.0000E+00
40	-.1127E-01	-.5764E-04	.9201E-04	/	-.1346E-03	.2358E-03	.0000E+00

========== I M A G E S 3 D ==========
= Copyright (c) 1984 Celestial Software Inc. =
==========

SOLVE DISPLACEMENTS Version 2.0 07/01/90

L

LOAD CASE 4
UBC SEISMIC LOAD - SN & EW DIR.

Node	Translations X	Translations Y	Translations Z	/	Rotations X	Rotations Y	Rotations Z
41	-.1301E-01	-.5361E-04	.8676E-04	/	-.1438E-03	-.1167E-04	.0000E+00
42	-.1098E-01	-.4986E-04	.8287E-04	/	-.1319E-03	-.2508E-03	.0000E+00
43	-.5904E-02	-.4566E-04	.8009E-04	/	-.6636E-04	-.4031E-03	.0000E+00
44	-.7904E-04	-.3924E-04	.7909E-04	/	.1377E-05	-.3478E-03	.9984E-06
45	-.7260E-04	-.3951E-04	.6241E-02	/	.6781E-04	-.4639E-03	.0000E+00
46	-.6699E-04	-.3860E-04	.1252E-01	/	.1397E-03	-.3635E-03	.0000E+00
47	-.6231E-04	-.3740E-04	.1661E-01	/	.1640E-03	-.1753E-03	.0000E+00
48	-.5839E-04	-.3573E-04	.1781E-01	/	.1770E-03	.1638E-04	.0000E+00
49	-.5498E-04	-.3308E-04	.1651E-01	/	.1480E-03	.1555E-03	.0000E+00
50	-.5252E-04	-.2841E-04	.1409E-01	/	.1193E-03	.1634E-03	.1006E-05
51	-.5603E-04	-.7050E-04	.1521E-01	/	-.2299E-04	.2052E-03	-.1008E-06
52	-.5351E-04	-.7638E-04	.1152E-01	/	-.3045E-04	.3341E-03	.0000E+00
53	-.5169E-04	-.8408E-04	.6221E-02	/	.9007E-06	.4418E-03	.0000E+00
54	-.5066E-04	-.9343E-04	.1405E-03	/	.3531E-05	.4471E-03	.1576E-05
55	-.7018E-02	-.8745E-04	.1332E-03	/	-.1774E-05	.4510E-03	.0000E+00
56	-.1256E-01	-.8140E-04	.1277E-03	/	.1795E-04	.2640E-03	.0000E+00
57	-.1457E-01	-.7586E-04	.1228E-03	/	.1738E-05	-.4721E-05	.0000E+00
58	-.1238E-01	-.6955E-04	.1192E-03	/	.4669E-05	-.2779E-03	.0000E+00
59	-.6731E-02	-.6274E-04	.1176E-03	/	-.8986E-05	-.4504E-03	.0000E+00
60	-.9998E-04	-.5430E-04	.1170E-03	/	.2179E-05	-.4043E-03	.8421E-06
61	-.9498E-04	-.5494E-04	.7030E-02	/	.3994E-05	-.5062E-03	.0000E+00
62	-.9012E-04	-.5392E-04	.1377E-01	/	-.2633E-04	-.3823E-03	.0000E+00
63	-.8553E-04	-.5202E-04	.1786E-01	/	-.4975E-04	-.1569E-03	.0000E+00
64	-.8146E-04	-.4917E-04	.1857E-01	/	-.1084E-03	.6326E-04	.0000E+00
65	-.7851E-04	-.4560E-04	.1666E-01	/	-.1338E-03	.1882E-03	.0000E+00
66	-.7583E-04	-.3969E-04	.1381E-01	/	-.1441E-03	.1871E-03	.1674E-05
67	-.4721E-04	-.8070E-04	.1269E-01	/	-.2064E-03	.1903E-03	-.6413E-06
68	-.4564E-04	-.8859E-04	.9427E-02	/	-.1596E-03	.2874E-03	.0000E+00
69	-.4420E-04	-.9830E-04	.5052E-02	/	-.1074E-03	.3525E-03	.0000E+00
70	-.4298E-04	-.1115E-03	.1610E-03	/	-.2411E-05	.3636E-03	-.3048E-05
71	-.5915E-02	-.1047E-03	.1589E-03	/	.1021E-03	.3936E-03	.0000E+00
72	-.1098E-01	-.9987E-04	.1550E-03	/	.1249E-03	.2595E-03	.0000E+00
73	-.1303E-01	-.9345E-04	.1520E-03	/	.1384E-03	.4743E-05	.0000E+00
74	-.1115E-01	-.8582E-04	.1495E-03	/	.1066E-03	-.2476E-03	.0000E+00
75	-.6102E-02	-.7527E-04	.1472E-03	/	.6645E-04	-.4031E-03	.0000E+00
76	-.1158E-03	-.6644E-04	.1482E-03	/	.3435E-06	-.3688E-03	.7119E-06
77	-.1116E-03	-.6594E-04	.6261E-02	/	-.7411E-04	-.4367E-03	.0000E+00
78	-.1077E-03	-.6488E-04	.1197E-01	/	-.1372E-03	-.3152E-03	.0000E+00
79	-.1033E-03	-.6342E-04	.1503E-01	/	-.2076E-03	-.8907E-04	.0000E+00
80	-.9832E-04	-.6039E-04	.1459E-01	/	-.2528E-03	.1474E-03	.0000E+00
81	-.9358E-04	-.5456E-04	.1149E-01	/	-.3366E-03	.2609E-03	.0000E+00

========== I M A G E S 3 D ==========
= Copyright (c) 1984 Celestial Software Inc. =
==========

SOLVE DISPLACEMENTS Version 2.0 07/01/90

L

LOAD CASE 4
UBC SEISMIC LOAD - SN & EW DIR.

Node	Translations X	Translations Y	Translations Z	/	Rotations X	Rotations Y	Rotations Z
82	-.9225E-04	-.4934E-04	.8422E-02	/	-.3455E-03	.1426E-03	-.3086E-05
83	-.2328E-04	-.8548E-04	.5432E-02	/	-.3199E-03	.1238E-03	-.4367E-06
84	-.2099E-04	-.9712E-04	.3907E-02	/	-.2423E-03	.9829E-04	.0000E+00
85	-.1755E-04	-.1087E-03	.2111E-02	/	-.1057E-03	.1643E-03	.0000E+00
86	-.1429E-04	-.1224E-03	.1824E-03	/	.3927E-05	.1157E-03	.1081E-05
87	-.3073E-02	-.1209E-03	.1763E-03	/	.1040E-03	.2782E-03	.0000E+00
88	-.6571E-02	-.1133E-03	.1765E-03	/	.1963E-03	.1741E-03	.0000E+00
89	-.8138E-02	-.1055E-03	.1793E-03	/	.2170E-03	.2813E-04	.0000E+00
90	-.7266E-02	-.9856E-04	.1824E-03	/	.1760E-03	-.1404E-03	.0000E+00
91	-.4046E-02	-.9089E-04	.1832E-03	/	.8256E-04	-.2756E-03	.0000E+00
92	-.1308E-03	-.7422E-04	.1760E-03	/	.1541E-05	-.2291E-03	-.2905E-06
93	-.1283E-03	-.7299E-04	.4073E-02	/	-.8468E-04	-.2842E-03	.0000E+00
94	-.1237E-03	-.7365E-04	.7428E-02	/	-.1932E-03	-.1587E-03	.0000E+00
95	-.1189E-03	-.7323E-04	.8608E-02	/	-.2593E-03	.3220E-05	.0000E+00
96	-.1138E-03	-.7188E-04	.7433E-02	/	-.2676E-03	.1516E-03	.0000E+00
97	-.1060E-03	-.6861E-04	.4172E-02	/	-.1960E-03	.2792E-03	.0000E+00
98	-.9013E-04	-.6012E-04	.1422E-02	/	-.1581E-03	.8185E-04	.1694E-04
99	-.3084E-05	-.8283E-04	.7193E-03	/	-.2486E-03	.6774E-04	-.5866E-05
100	-.2801E-05	-.1010E-03	.3662E-03	/	-.1867E-03	-.1034E-04	-.5458E-06
101	-.1196E-06	-.1110E-03	.5152E-03	/	-.8734E-04	-.8047E-05	.7050E-07
102	.4789E-05	-.1229E-03	.1581E-03	/	-.1220E-04	.6529E-04	-.7772E-05
103	-.1719E-02	-.1246E-03	.1756E-03	/	.2176E-05	.1535E-03	-.5976E-04
104	-.3979E-02	-.1143E-03	.1845E-03	/	.3516E-06	.1338E-03	-.1170E-03
105	-.5300E-02	-.1065E-03	.1906E-03	/	.4902E-06	.3504E-04	-.1269E-03
106	-.4924E-02	-.9945E-04	.1975E-03	/	-.5211E-06	-.8364E-04	-.1070E-03
107	-.2949E-02	-.9340E-04	.2097E-03	/	-.2769E-06	-.1690E-03	-.5090E-04
108	-.1450E-03	-.7476E-04	.2344E-03	/	.8090E-05	-.1906E-03	.2055E-05
109	-.1346E-03	-.7598E-04	.2946E-02	/	-.5311E-04	-.1651E-03	-.3923E-06
110	-.1281E-03	-.7663E-04	.4841E-02	/	-.1193E-03	-.8269E-04	.3731E-07
111	-.1236E-03	-.7634E-04	.5225E-02	/	-.1507E-03	.3199E-04	.3984E-07
112	-.1205E-03	-.7526E-04	.3976E-02	/	-.1505E-03	.1312E-03	.8869E-07
113	-.1205E-03	-.7422E-04	.1729E-02	/	-.9988E-04	.1610E-03	-.2696E-07
114	-.1290E-03	-.6218E-04	-.3695E-03	/	-.6531E-04	.1140E-03	.3845E-05
115	.0000E+00	-.5298E-03	.0000E+00	/	-.8085E-05	-.6391E-08	-.8059E-05
116	.0000E+00	.0000E+00	.0000E+00	/	.5574E-05	-.3642E-06	.2477E-05
117	.0000E+00	.0000E+00	.0000E+00	/	.7861E-05	-.3635E-06	.5570E-05
118	.0000E+00	.0000E+00	.0000E+00	/	.5574E-05	.3599E-06	.7858E-05
119	.0000E+00	.0000E+00	.0000E+00	/	.2481E-05	.3592E-06	.5571E-05
120	-.2206E-02	-.1320E-02	.2207E-02	/	-.1705E-05	-.4369E-08	-.1701E-05
121	-.4596E-04	-.4420E-03	.4597E-04	/	.7520E-05	-.1985E-08	.7516E-05
122	.0000E+00	.0000E+00	.0000E+00	/	.4766E-03	.0000E+00	.0000E+00

========== I M A G E S 3 D ==========
= Copyright (c) 1984 Celestial Software Inc. =
==========

SOLVE DISPLACEMENTS Version 2.0 07/01/90

L

L O A D C A S E 4

UBC SEISMIC LOAD - SN & EW DIR.

Node	Translations X	Translations Y	Translations Z	Rotations X	Rotations Y	Rotations Z
123	.0000E+00	.0000E+00	.0000E+00	.3740E-03	.0000E+00	.0000E+00
124	-.3829E-04	-.3843E-04	.9711E-02	.4040E-03	.7232E-04	.1694E-05
125	-.2152E-04	-.3180E-05	.7335E-02	.2909E-03	.5629E-04	.1320E-05
126	-.5556E-04	-.5706E-04	.1660E-01	.2211E-03	.1328E-03	.3502E-06
127	-.4927E-04	-.1344E-04	.1152E-01	.8828E-04	.9351E-04	.1229E-05
128	-.5867E-04	-.6568E-04	.1895E-01	-.7897E-05	.1691E-03	-.1987E-06
129	-.7342E-04	-.2697E-04	.1101E-01	-.1337E-03	.9254E-04	.7922E-06
130	-.4897E-04	-.6855E-04	.1648E-01	-.2160E-03	.1885E-03	-.4039E-06
131	-.8546E-04	-.4010E-04	.6792E-02	-.2470E-03	.2099E-04	.5695E-06
132	-.2280E-04	-.6871E-04	.8575E-02	-.3573E-03	.1909E-03	-.1948E-05
133	-.1002E-03	-.4071E-04	.6137E-03	-.2033E-03	.8344E-06	.7679E-06
134	-.6945E-05	-.6994E-04	.2829E-02	-.3379E-03	.1397E-03	.4688E-06
135	-.1209E-03	-.3802E-04	-.2295E-02	-.1475E-03	.7692E-04	.1148E-05

========== I M A G E S 3 D ==========
= Copyright (c) 1984 Celestial Software Inc. =
==========

SOLVE DISPLACEMENTS Version 2.0 07/01/90

L

L O A D C A S E 5

UBC SEISMIC LOAD - NS & WE

APPLIED LOAD VECTOR

Node	Fx	Fy	Fz	Mx	My	Mz
1	.2724E+02	-.7264E+02	-.2724E+02	-.1265E+04	-.2497E+03	-.5993E+03
2	.2384E+02	-.6358E+02	-.2384E+02	-.1537E+02	.0000E+00	-.1537E+02
3	.1595E+02	-.4254E+02	-.1595E+02	.0000E+00	.0000E+00	.0000E+00
4	.1595E+02	-.4254E+02	-.1595E+02	.0000E+00	.0000E+00	.0000E+00
5	.2122E+02	-.5657E+02	-.2122E+02	-.1537E+02	.0000E+00	-.1537E+02
6	.1809E+02	-.4825E+02	-.1809E+02	.0000E+00	.0000E+00	.0000E+00
7	.1809E+02	-.4825E+02	-.1809E+02	.0000E+00	.0000E+00	.0000E+00
8	.1809E+02	-.4825E+02	-.1809E+02	.0000E+00	.0000E+00	.0000E+00
9	.1809E+02	-.4825E+02	-.1809E+02	.0000E+00	.0000E+00	.0000E+00
10	.1809E+02	-.4825E+02	-.1809E+02	.0000E+00	.0000E+00	.0000E+00
11	.2443E+02	-.6513E+02	-.2443E+02	-.2393E+02	.0000E+00	-.2393E+02
12	.1771E+02	-.4721E+02	-.1771E+02	.0000E+00	.0000E+00	.0000E+00
13	.1771E+02	-.4721E+02	-.1771E+02	.0000E+00	.0000E+00	.0000E+00
14	.1771E+02	-.4721E+02	-.1771E+02	.0000E+00	.0000E+00	.0000E+00
15	.1771E+02	-.4721E+02	-.1771E+02	.0000E+00	.0000E+00	.0000E+00
16	.1771E+02	-.4721E+02	-.1771E+02	.0000E+00	.0000E+00	.0000E+00
17	.2472E+02	-.6591E+02	-.2472E+02	-.1537E+02	.0000E+00	-.1537E+02
18	.2663E+02	-.7101E+02	-.2663E+02	-.4142E+02	.2042E+03	-.5858E+03
19	.4768E+02	-.1272E+03	-.4768E+02	.0000E+00	.0000E+00	.0000E+00
20	.3191E+02	-.8509E+02	-.3191E+02	.0000E+00	.0000E+00	.0000E+00
21	.3191E+02	-.8509E+02	-.3191E+02	.0000E+00	.0000E+00	.0000E+00
22	.4243E+02	-.1131E+03	-.4243E+02	.0000E+00	.0000E+00	.0000E+00
23	.3619E+02	-.9650E+02	-.3619E+02	.0000E+00	.0000E+00	.0000E+00
24	.3619E+02	-.9650E+02	-.3619E+02	.0000E+00	.0000E+00	.0000E+00
25	.3619E+02	-.9650E+02	-.3619E+02	.0000E+00	.0000E+00	.0000E+00
26	.3619E+02	-.9650E+02	-.3619E+02	.0000E+00	.0000E+00	.0000E+00
27	.3619E+02	-.9650E+02	-.3619E+02	.0000E+00	.0000E+00	.0000E+00
28	.4885E+02	-.1303E+03	-.4885E+02	.0000E+00	.0000E+00	.0000E+00
29	.3541E+02	-.9443E+02	-.3541E+02	.0000E+00	.0000E+00	.0000E+00
30	.3541E+02	-.9443E+02	-.3541E+02	.0000E+00	.0000E+00	.0000E+00
31	.3541E+02	-.9443E+02	-.3541E+02	.0000E+00	.0000E+00	.0000E+00
32	.3541E+02	-.9443E+02	-.3541E+02	.0000E+00	.0000E+00	.0000E+00
33	.3541E+02	-.9443E+02	-.3541E+02	.0000E+00	.0000E+00	.0000E+00
34	.4943E+02	-.1318E+03	-.4943E+02	.0000E+00	.0000E+00	.0000E+00
35	.4768E+02	-.1272E+03	-.4768E+02	.0000E+00	.0000E+00	.0000E+00

========== I M A G E S 3 D ==========
= Copyright (c) 1984 Celestial Software Inc. =
==========

SOLVE DISPLACEMENTS Version 2.0 07/01/90

L

L O A D C A S E 5

UBC SEISMIC LOAD - NS & WE

APPLIED LOAD VECTOR

Node	Fx	Fy	Fz	Mx	My	Mz
36	.3191E+02	-.8509E+02	-.3191E+02	.0000E+00	.0000E+00	.0000E+00
37	.3191E+02	-.8509E+02	-.3191E+02	.0000E+00	.0000E+00	.0000E+00
38	.4243E+02	-.1131E+03	-.4243E+02	.0000E+00	.0000E+00	.0000E+00
39	.3619E+02	-.9650E+02	-.3619E+02	.0000E+00	.0000E+00	.0000E+00
40	.3619E+02	-.9650E+02	-.3619E+02	.0000E+00	.0000E+00	.0000E+00
41	.3619E+02	-.9650E+02	-.3619E+02	.0000E+00	.0000E+00	.0000E+00
42	.3619E+02	-.9650E+02	-.3619E+02	.0000E+00	.0000E+00	.0000E+00
43	.3619E+02	-.9650E+02	-.3619E+02	.0000E+00	.0000E+00	.0000E+00
44	.4885E+02	-.1303E+03	-.4885E+02	.0000E+00	.0000E+00	.0000E+00
45	.3541E+02	-.9443E+02	-.3541E+02	.0000E+00	.0000E+00	.0000E+00
46	.3541E+02	-.9443E+02	-.3541E+02	.0000E+00	.0000E+00	.0000E+00
47	.3541E+02	-.9443E+02	-.3541E+02	.0000E+00	.0000E+00	.0000E+00
48	.3541E+02	-.9443E+02	-.3541E+02	.0000E+00	.0000E+00	.0000E+00
49	.3541E+02	-.9443E+02	-.3541E+02	.0000E+00	.0000E+00	.0000E+00
50	.4943E+02	-.1318E+03	-.4943E+02	.0000E+00	.0000E+00	.0000E+00
51	.4768E+02	-.1272E+03	-.4768E+02	.0000E+00	.0000E+00	.0000E+00
52	.3191E+02	-.8509E+02	-.3191E+02	.0000E+00	.0000E+00	.0000E+00
53	.3191E+02	-.8509E+02	-.3191E+02	.0000E+00	.0000E+00	.0000E+00
54	.4243E+02	-.1131E+03	-.4243E+02	.0000E+00	.0000E+00	.0000E+00
55	.3619E+02	-.9650E+02	-.3619E+02	.0000E+00	.0000E+00	.0000E+00
56	.3619E+02	-.9650E+02	-.3619E+02	.0000E+00	.0000E+00	.0000E+00
57	.3619E+02	-.9650E+02	-.3619E+02	.0000E+00	.0000E+00	.0000E+00
58	.3619E+02	-.9650E+02	-.3619E+02	.0000E+00	.0000E+00	.0000E+00
59	.3619E+02	-.9650E+02	-.3619E+02	.0000E+00	.0000E+00	.0000E+00
60	.4885E+02	-.1303E+03	-.4885E+02	.0000E+00	.0000E+00	.0000E+00
61	.3541E+02	-.9443E+02	-.3541E+02	.0000E+00	.0000E+00	.0000E+00
62	.3541E+02	-.9443E+02	-.3541E+02	.0000E+00	.0000E+00	.0000E+00
63	.3541E+02	-.9443E+02	-.3541E+02	.0000E+00	.0000E+00	.0000E+00
64	.3541E+02	-.9443E+02	-.3541E+02	.0000E+00	.0000E+00	.0000E+00
65	.3541E+02	-.9443E+02	-.3541E+02	.0000E+00	.0000E+00	.0000E+00
66	.4943E+02	-.1318E+03	-.4943E+02	.0000E+00	.0000E+00	.0000E+00
67	.5364E+02	-.1431E+03	-.5364E+02	-.8644E+01	.0000E+00	-.8644E+01
68	.3590E+02	-.9572E+02	-.3590E+02	.0000E+00	.0000E+00	.0000E+00
69	.3590E+02	-.9572E+02	-.3590E+02	.0000E+00	.0000E+00	.0000E+00
70	.4773E+02	-.1273E+03	-.4773E+02	-.8644E+01	.0000E+00	-.8644E+01
71	.4071E+02	-.1086E+03	-.4071E+02	.0000E+00	.0000E+00	.0000E+00
72	.4071E+02	-.1086E+03	-.4071E+02	.0000E+00	.0000E+00	.0000E+00
73	.4071E+02	-.1086E+03	-.4071E+02	.0000E+00	.0000E+00	.0000E+00
74	.4071E+02	-.1086E+03	-.4071E+02	.0000E+00	.0000E+00	.0000E+00
75	.4071E+02	-.1086E+03	-.4071E+02	.0000E+00	.0000E+00	.0000E+00

========== I M A G E S 3 D ==========
= Copyright (c) 1984 Celestial Software Inc. =
==========

SOLVE DISPLACEMENTS Version 2.0 07/01/90

L

L O A D C A S E 5

UBC SEISMIC LOAD - NS & WE

APPLIED LOAD VECTOR

Node	Fx	Fy	Fz	Mx	My	Mz
76	.5496E+02	-.1466E+03	-.5496E+02	-.1346E+02	.0000E+00	-.1346E+02
77	.3984E+02	-.1062E+03	-.3984E+02	.0000E+00	.0000E+00	.0000E+00
78	.3984E+02	-.1062E+03	-.3984E+02	.0000E+00	.0000E+00	.0000E+00
79	.3984E+02	-.1062E+03	-.3984E+02	.0000E+00	.0000E+00	.0000E+00
80	.3984E+02	-.1062E+03	-.3984E+02	.0000E+00	.0000E+00	.0000E+00
81	.3984E+02	-.1062E+03	-.3984E+02	.0000E+00	.0000E+00	.0000E+00
82	.5561E+02	-.1483E+03	-.5561E+02	-.8644E+01	.0000E+00	-.8644E+01
83	.4768E+02	-.1272E+03	-.4768E+02	.1537E+02	.0000E+00	.1537E+02
84	.3191E+02	-.8509E+02	-.3191E+02	.0000E+00	.0000E+00	.0000E+00
85	.3191E+02	-.8509E+02	-.3191E+02	.0000E+00	.0000E+00	.0000E+00
86	.4910E+02	-.1309E+03	-.4910E+02	-.4686E+02	.7779E+01	-.6760E+02
87	.3619E+02	-.9650E+02	-.3619E+02	.0000E+00	.0000E+00	.0000E+00
88	.3619E+02	-.9650E+02	-.3619E+02	.0000E+00	.0000E+00	.0000E+00
89	.3619E+02	-.9650E+02	-.3619E+02	.0000E+00	.0000E+00	.0000E+00
90	.3619E+02	-.9650E+02	-.3619E+02	.0000E+00	.0000E+00	.0000E+00
91	.3619E+02	-.9650E+02	-.3619E+02	.0000E+00	.0000E+00	.0000E+00
92	.6357E+02	-.1695E+03	-.6357E+02	.4948E+03	.2453E+03	-.1592E+03
93	.3541E+02	-.9443E+02	-.3541E+02	.0000E+00	.0000E+00	.0000E+00
94	.3541E+02	-.9443E+02	-.3541E+02	.0000E+00	.0000E+00	.0000E+00
95	.3541E+02	-.9443E+02	-.3541E+02	.0000E+00	.0000E+00	.0000E+00
96	.3541E+02	-.9443E+02	-.3541E+02	.0000E+00	.0000E+00	.0000E+00
97	.3541E+02	-.9443E+02	-.3541E+02	.0000E+00	.0000E+00	.0000E+00
98	.6766E+02	-.1804E+03	-.6766E+02	.5986E+03	.2734E+02	.5257E+03
99	.7090E+02	-.1891E+03	-.7090E+02	.4736E+03	.7514E+02	.2732E+03
100	.1717E+02	-.4579E+02	-.1717E+02	.0000E+00	-.8276E-05	.2207E-04
101	.1717E+02	-.4579E+02	-.1717E+02	.0000E+00	.8276E-05	-.2207E-04
102	.4625E+02	-.1233E+03	-.4625E+02	-.1036E+04	-.2182E+02	-.9780E+03
103	.1948E+02	-.5194E+02	-.1948E+02	.0000E+00	.0000E+00	.0000E+00
104	.1948E+02	-.5194E+02	-.1948E+02	.0000E+00	.0000E+00	.0000E+00
105	.1948E+02	-.5194E+02	-.1948E+02	.0000E+00	.0000E+00	.0000E+00
106	.1948E+02	-.5194E+02	-.1948E+02	.0000E+00	.0000E+00	.0000E+00
107	.1948E+02	-.5194E+02	-.1948E+02	.0000E+00	.0000E+00	.0000E+00
108	.4352E+02	-.1161E+03	-.4352E+02	.8341E+03	.1827E+03	.3468E+03
109	.1906E+02	-.5082E+02	-.1906E+02	.0000E+00	.0000E+00	.0000E+00
110	.1906E+02	-.5082E+02	-.1906E+02	.0000E+00	-.1470E-04	.3919E-04
111	.1906E+02	-.5082E+02	-.1906E+02	.0000E+00	.4409E-04	-.1176E-03
112	.1906E+02	-.5082E+02	-.1906E+02	.0000E+00	-.1029E-03	.2743E-03
113	.1906E+02	-.5082E+02	-.1906E+02	.0000E+00	.1029E-03	-.2743E-03
114	.7665E+02	-.2044E+03	-.7665E+02	.1075E+04	-.1905E+03	.1583E+04
115	.1016E+04	-.2708E+04	-.1016E+04	.1677E+05	-.2804E+03	.1751E+05

KAISER ENGINEERS HANFORD S/N:801854 02/22/95
PAGE 51 Run ID=MN61973 08:49:59

```
============== I M A G E S  3 D ==============
= Copyright (c) 1984   Celestial Software Inc. =
===============================================
```

SOLVE DISPLACEMENTS Version 2.0 07/01/90

L

L O A D C A S E 5

UBC SEISMIC LOAD - NS & WE

APPLIED LOAD VECTOR

Node	Fx	Fy	Fz	Mx	My	Mz
116	.2585E+03	-.6893E+03	-.2585E+03	-.4221E+04	.9047E+03	-.6633E+04
117	.2585E+03	-.6893E+03	-.2585E+03	-.1808E+04	.9047E+03	-.4221E+04
118	.2585E+03	-.6893E+03	-.2585E+03	-.4221E+04	-.9047E+03	-.1808E+04
119	.2585E+03	-.6893E+03	-.2585E+03	-.6633E+04	-.9047E+03	-.4221E+04
120	.1147E+05	-.3058E+05	-.1147E+05	.3416E+03	.0000E+00	.3416E+03
121	.2736E+03	-.7297E+03	-.2736E+03	-.1216E+04	.0000E+00	-.1216E+04
122	.1586E+02	-.4231E+02	-.1586E+02	-.1537E+02	.0000E+00	-.1537E+02
123	.1586E+02	-.4231E+02	-.1586E+02	-.1537E+02	.0000E+00	-.1537E+02
124	.3173E+02	-.8461E+02	-.3173E+02	.0000E+00	.0000E+00	.0000E+00
125	.3173E+02	-.8461E+02	-.3173E+02	.0000E+00	.0000E+00	.0000E+00
126	.3173E+02	-.8461E+02	-.3173E+02	.0000E+00	.0000E+00	.0000E+00
127	.3173E+02	-.8461E+02	-.3173E+02	.0000E+00	.0000E+00	.0000E+00
128	.3173E+02	-.8461E+02	-.3173E+02	.0000E+00	.0000E+00	.0000E+00
129	.3173E+02	-.8461E+02	-.3173E+02	.0000E+00	.0000E+00	.0000E+00
130	.3570E+02	-.9519E+02	-.3570E+02	-.8644E+01	.0000E+00	-.8644E+01
131	.3570E+02	-.9519E+02	-.3570E+02	-.8644E+01	.0000E+00	-.8644E+01
132	.3173E+02	-.8461E+02	-.3173E+02	.2401E+02	.0000E+00	.2401E+02
133	.3173E+02	-.8461E+02	-.3173E+02	.1537E+02	.0000E+00	.1537E+02
134	.1571E+02	-.4189E+02	-.1571E+02	.0000E+00	.1270E+02	-.3387E+02
135	.1571E+02	-.4189E+02	-.1571E+02	.8644E+01	-.1270E+02	.4251E+02

KAISER ENGINEERS HANFORD S/N:801854 02/22/95
PAGE 52 Run ID=MN61973 08:50:01

```
============== I M A G E S  3 D ==============
= Copyright (c) 1984   Celestial Software Inc. =
===============================================
```

SOLVE DISPLACEMENTS Version 2.0 07/01/90

L

L O A D C A S E 5

UBC SEISMIC LOAD - NS & WE

DISPLACEMENTS

Node	Translations X	Translations Y	Translations Z	Rotations X	Rotations Y	Rotations Z
1	.0000E+00	.0000E+00	.0000E+00	-.3209E-03	-.9089E-04	-.5035E-04
2	.0000E+00	.0000E+00	.0000E+00	-.3992E-03	.0000E+00	.0000E+00
3	.0000E+00	.0000E+00	.0000E+00	-.3193E-03	.0000E+00	.0000E+00
4	.0000E+00	.0000E+00	.0000E+00	-.1641E-03	.0000E+00	.0000E+00
5	.0000E+00	.0000E+00	.0000E+00	.0000E+00	.0000E+00	.0000E+00
6	.0000E+00	.0000E+00	.0000E+00	.0000E+00	.0000E+00	-.1916E-03
7	.0000E+00	.0000E+00	.0000E+00	.0000E+00	.0000E+00	-.3550E-03
8	.0000E+00	.0000E+00	.0000E+00	.0000E+00	.0000E+00	-.3950E-03
9	.0000E+00	.0000E+00	.0000E+00	.0000E+00	.0000E+00	-.3429E-03
10	.0000E+00	.0000E+00	.0000E+00	.0000E+00	.0000E+00	-.1761E-03
11	.0000E+00	.0000E+00	.0000E+00	.0000E+00	.0000E+00	.0000E+00
12	.0000E+00	.0000E+00	.0000E+00	-.1903E-03	.0000E+00	.0000E+00
13	.0000E+00	.0000E+00	.0000E+00	-.4002E-03	.0000E+00	.0000E+00
14	.0000E+00	.0000E+00	.0000E+00	-.5215E-03	.0000E+00	.0000E+00
15	.0000E+00	.0000E+00	.0000E+00	-.5759E-03	.0000E+00	.0000E+00
16	.0000E+00	.0000E+00	.0000E+00	-.5317E-03	.0000E+00	.0000E+00
17	.0000E+00	.0000E+00	.0000E+00	-.4617E-03	.0000E+00	.0000E+00
18	.0000E+00	.0000E+00	.0000E+00	-.3861E-04	-.6114E-04	-.1412E-03
19	.2304E-04	-.2265E-04	-.8082E-02	-.3346E-03	-.9675E-04	-.1164E-05
20	.2758E-04	-.2048E-04	-.6235E-02	-.2473E-03	-.1734E-03	.0000E+00
21	.3185E-04	-.1730E-04	-.3375E-02	-.1425E-03	-.2449E-03	.0000E+00
22	.3604E-04	-.1370E-04	-.3800E-04	-.3865E-05	-.2429E-03	-.3496E-05
23	.3853E-02	-.1732E-04	-.4025E-04	.1585E-03	-.2489E-03	.0000E+00
24	.6868E-02	-.1946E-04	-.4255E-04	.2690E-03	-.1400E-03	.0000E+00
25	.7897E-02	-.2088E-04	-.4499E-04	.3225E-03	.7421E-05	.0000E+00
26	.6657E-02	-.2232E-04	-.4793E-04	.2618E-03	.1525E-03	.0000E+00
27	.3550E-02	-.2408E-04	-.5196E-04	.1466E-03	.2482E-03	.0000E+00
28	.2299E-04	-.3129E-04	-.5834E-04	-.4742E-05	.2063E-03	-.2133E-05
29	.2741E-04	-.2812E-04	-.3823E-02	-.1574E-03	.2894E-03	.0000E+00
30	.2995E-04	-.2865E-04	-.7749E-02	-.3038E-03	.2280E-03	.0000E+00
31	.3186E-04	-.2953E-04	-.1036E-01	-.4198E-03	.1158E-03	.0000E+00
32	.3374E-04	-.3089E-04	-.1122E-01	-.4432E-03	-.2702E-05	.0000E+00
33	.3599E-04	-.3296E-04	-.1051E-01	-.4238E-03	-.9034E-04	.0000E+00
34	.3925E-04	-.3631E-04	-.9091E-02	-.3632E-03	-.9640E-04	-.2144E-05
35	.3942E-04	-.4418E-04	-.1367E-01	-.1734E-03	-.1719E-03	-.4407E-06
36	.4387E-04	-.4024E-04	-.1043E-01	-.1346E-03	-.3025E-03	.0000E+00
37	.4857E-04	-.3397E-04	-.5590E-02	-.5839E-04	-.4058E-03	.0000E+00
38	.5304E-04	-.2498E-04	-.8111E-04	-.1115E-05	-.4000E-03	.9198E-06
39	.6318E-02	-.3218E-04	-.8171E-04	.6523E-04	-.4077E-03	.0000E+00
40	.1131E-01	-.3612E-04	-.8352E-04	.1346E-03	-.2355E-03	.0000E+00

========== I M A G E S 3 D ==========
= Copyright (c) 1984 Celestial Software Inc. =
==========

SOLVE DISPLACEMENTS Version 2.0 07/01/90

L

L O A D C A S E 5

UBC SEISMIC LOAD - NS & WE

Node	Translations X	Translations Y	Translations Z	/	Rotations X	Rotations Y	Rotations Z
41	.1304E-01	-.3929E-04	-.8642E-04	/	.1444E-03	.1217E-04	.0000E+00
42	.1099E-01	-.4233E-04	-.9060E-04	/	.1322E-03	.2519E-03	.0000E+00
43	.5901E-02	-.4671E-04	-.9649E-04	/	.6689E-04	.4042E-03	.0000E+00
44	.5538E-04	-.5188E-04	-.1037E-03	/	-.7861E-06	.3494E-03	-.1461E-05
45	.5683E-04	-.5301E-04	-.6306E-02	/	-.6784E-04	.4677E-03	.0000E+00
46	.5934E-04	-.5393E-04	-.1265E-01	/	-.1420E-03	.3684E-03	.0000E+00
47	.6205E-04	-.5606E-04	-.1682E-01	/	-.1670E-03	.1808E-03	.0000E+00
48	.6529E-04	-.5885E-04	-.1810E-01	/	-.1825E-03	-.1179E-04	.0000E+00
49	.6938E-04	-.6300E-04	-.1686E-01	/	-.1532E-03	-.1517E-03	.0000E+00
50	.7534E-04	-.7026E-04	-.1448E-01	/	-.1260E-03	-.1615E-03	-.1250E-05
51	.4292E-04	-.6358E-04	-.1535E-01	/	.2107E-04	-.2087E-03	.2049E-06
52	.4646E-04	-.5759E-04	-.1161E-01	/	.2831E-04	-.3386E-03	.0000E+00
53	.5070E-04	-.4818E-04	-.6244E-02	/	-.1250E-05	-.4461E-03	.0000E+00
54	.5491E-04	-.3565E-04	-.1182E-03	/	-.2234E-05	-.4493E-03	-.1130E-05
55	.7046E-02	-.4341E-04	-.1182E-03	/	.1176E-05	-.4519E-03	.0000E+00
56	.1260E-01	-.4896E-04	-.1193E-03	/	-.1774E-04	-.2640E-03	.0000E+00
57	.1460E-01	-.5327E-04	-.1214E-03	/	-.2154E-05	.5563E-05	.0000E+00
58	.1240E-01	-.5829E-04	-.1247E-03	/	-.4574E-05	.2785E-03	.0000E+00
59	.6738E-02	-.6330E-04	-.1293E-03	/	.9292E-05	.4514E-03	.0000E+00
60	.8548E-04	-.6773E-04	-.1343E-03	/	-.1753E-05	.4061E-03	-.1391E-05
61	.8582E-04	-.7124E-04	-.7096E-02	/	-.4185E-05	.5108E-03	.0000E+00
62	.8709E-04	-.7455E-04	-.1392E-01	/	.2713E-04	.3885E-03	.0000E+00
63	.8907E-04	-.7805E-04	-.1811E-01	/	.4925E-04	.1639E-03	.0000E+00
64	.9178E-04	-.8269E-04	-.1892E-01	/	.1076E-03	-.5614E-04	.0000E+00
65	.9583E-04	-.8820E-04	-.1710E-01	/	.1306E-03	-.1842E-03	.0000E+00
66	.9989E-04	-.9588E-04	-.1430E-01	/	.1425E-03	-.1854E-03	-.1257E-05
67	.3274E-04	-.7958E-04	-.1286E-01	/	.2050E-03	-.1940E-03	.4768E-06
68	.3489E-04	-.7191E-04	-.9539E-02	/	.1591E-03	-.2927E-03	.0000E+00
69	.3743E-04	-.6176E-04	-.5091E-02	/	.1064E-03	-.3579E-03	.0000E+00
70	.4167E-04	-.4482E-04	-.1451E-03	/	.8901E-07	-.3662E-03	.2721E-05
71	.5936E-02	-.5268E-04	-.1462E-03	/	-.1023E-03	-.3939E-03	.0000E+00
72	.1100E-01	-.5715E-04	-.1468E-03	/	-.1265E-03	-.2591E-03	.0000E+00
73	.1305E-01	-.6226E-04	-.1485E-03	/	-.1388E-03	-.5112E-05	.0000E+00
74	.1117E-01	-.6790E-04	-.1509E-03	/	-.1067E-03	.2481E-03	.0000E+00
75	.6112E-02	-.7511E-04	-.1535E-03	/	-.6639E-04	.4037E-03	.0000E+00
76	.1106E-03	-.7964E-04	-.1584E-03	/	-.5145E-06	.3701E-03	-.7015E-06
77	.1114E-03	-.8530E-04	-.6310E-02	/	.7590E-04	.4406E-03	.0000E+00
78	.1119E-03	-.8944E-04	-.1209E-01	/	.1388E-03	.3205E-03	.0000E+00
79	.1119E-03	-.9364E-04	-.1524E-01	/	.2121E-03	.9471E-04	.0000E+00
80	.1119E-03	-.9943E-04	-.1489E-01	/	.2590E-03	-.1410E-03	.0000E+00
81	.1126E-03	-.1077E-03	-.1189E-01	/	.3436E-03	-.2536E-03	.0000E+00

========== I M A G E S 3 D ==========
= Copyright (c) 1984 Celestial Software Inc. =
==========

SOLVE DISPLACEMENTS Version 2.0 07/01/90

L

L O A D C A S E 5

UBC SEISMIC LOAD - NS & WE

Node	Translations X	Translations Y	Translations Z	/	Rotations X	Rotations Y	Rotations Z
82	.1171E-03	-.1139E-03	-.8878E-02	/	.3496E-03	-.1426E-03	.9025E-06
83	.8765E-05	-.9545E-04	-.5592E-02	/	.3224E-03	-.1270E-03	.1392E-05
84	.8949E-05	-.8271E-04	-.3996E-02	/	.2445E-03	-.1055E-03	.0000E+00
85	.5602E-05	-.6994E-04	-.2121E-02	/	.1087E-03	-.1685E-03	.0000E+00
86	.6180E-06	-.5850E-04	-.1621E-03	/	-.5665E-06	-.1161E-03	.5568E-06
87	.3064E-02	-.5825E-04	-.1628E-03	/	-.1058E-03	-.2786E-03	.0000E+00
88	.6576E-02	-.6335E-04	-.1664E-03	/	-.1957E-03	-.1755E-03	.0000E+00
89	.8153E-02	-.6915E-04	-.1717E-03	/	-.2169E-03	-.2791E-04	.0000E+00
90	.7282E-02	-.7448E-04	-.1775E-03	/	-.1761E-03	.1401E-03	.0000E+00
91	.4062E-02	-.7992E-04	-.1818E-03	/	-.8237E-04	.2759E-03	.0000E+00
92	.1419E-03	-.9175E-04	-.1810E-03	/	-.5566E-06	.2294E-03	-.1497E-05
93	.1401E-03	-.9622E-04	-.4090E-02	/	.8508E-04	.2855E-03	.0000E+00
94	.1372E-03	-.9903E-04	-.7450E-02	/	.1987E-03	.1581E-03	.0000E+00
95	.1346E-03	-.1029E-03	-.8628E-02	/	.2681E-03	-.3012E-05	.0000E+00
96	.1317E-03	-.1082E-03	-.7461E-02	/	.2809E-03	-.1508E-03	.0000E+00
97	.1265E-03	-.1162E-03	-.4216E-02	/	.2148E-03	-.2779E-03	.0000E+00
98	.1148E-03	-.1282E-03	-.1479E-02	/	.1831E-03	-.8135E-04	-.6519E-05
99	-.9601E-05	-.1057E-03	-.7796E-03	/	.2584E-03	-.6968E-04	.5564E-06
100	-.9083E-05	-.8361E-04	-.4038E-03	/	.1902E-03	.8917E-05	.1480E-05
101	-.8840E-05	-.6967E-04	-.5311E-03	/	.8545E-04	.6204E-05	.8500E-06
102	-.8744E-05	-.6527E-04	-.1462E-03	/	.1059E-05	-.6744E-04	-.1519E-05
103	.1741E-02	-.6104E-04	-.1618E-03	/	-.1502E-06	-.1547E-03	.5583E-04
104	.4009E-02	-.6645E-04	-.1722E-03	/	-.4024E-06	-.1337E-03	.1143E-03
105	.5326E-02	-.7245E-04	-.1804E-03	/	-.3615E-06	-.3457E-04	.1257E-03
106	.4941E-02	-.7764E-04	-.1891E-03	/	-.3151E-06	.8428E-04	.1068E-03
107	.2959E-02	-.8290E-04	-.2014E-03	/	-.4569E-06	.1692E-03	.5152E-04
108	.1605E-03	-.9575E-04	-.2224E-03	/	-.1686E-05	.1898E-03	-.1483E-07
109	.1512E-03	-.9664E-04	-.2906E-02	/	.5835E-04	.1624E-03	-.1460E-06
110	.1463E-03	-.1001E-03	-.4756E-02	/	.1271E-03	.7950E-04	-.2479E-06
111	.1436E-03	-.1040E-03	-.5089E-02	/	.1607E-03	-.3553E-04	-.3165E-06
112	.1424E-03	-.1087E-03	-.3787E-02	/	.1636E-03	-.1347E-03	-.1132E-06
113	.1438E-03	-.1166E-03	-.1494E-02	/	.1146E-03	-.1636E-03	-.2537E-05
114	.1516E-03	-.1345E-03	.6233E-03	/	.7941E-04	-.1137E-03	.9735E-05
115	.0000E+00	-.5302E-03	.0000E+00	/	.7995E-05	.7788E-08	.8007E-05
116	.0000E+00	.0000E+00	.0000E+00	/	-.5562E-05	.3622E-06	-.7852E-05
117	.0000E+00	.0000E+00	.0000E+00	/	-.2469E-05	.3626E-06	-.5564E-05
118	.0000E+00	.0000E+00	.0000E+00	/	-.5563E-05	-.3569E-06	-.2470E-05
119	.0000E+00	.0000E+00	.0000E+00	/	-.7851E-05	-.3573E-06	-.5564E-05
120	.2206E-02	-.1320E-02	-.2205E-02	/	.1689E-05	.5324E-08	.1691E-05
121	.4594E-04	-.4421E-03	-.4593E-04	/	-.7509E-05	.2418E-08	-.7510E-05
122	.0000E+00	.0000E+00	.0000E+00	/	-.4799E-03	.0000E+00	.0000E+00

```
              =============== I M A G E S  3 D ===============
              = Copyright (c) 1984   Celestial Software Inc. =
              ================================================

              SOLVE DISPLACEMENTS        Version 2.0  07/01/90

        L

                          L O A D   C A S E   5
        UBC SEISMIC LOAD - NS & WE
```

Node	Translations X	Translations Y	Translations Z	/	Rotations X	Rotations Y	Rotations Z
123	.0000E+00	.0000E+00	.0000E+00	/	-.3852E-03	.0000E+00	.0000E+00
124	.1612E-04	-.1734E-04	-.9783E-02	/	-.4072E-03	-.7349E-04	-.9455E-06
125	.5041E-04	-.5543E-04	-.7569E-02	/	-.3010E-03	-.5557E-04	-.2389E-05
126	.3295E-04	-.4185E-04	-.1674E-01	/	-.2241E-03	-.1348E-03	-.5069E-06
127	.8244E-04	-.8826E-04	-.1194E-01	/	-.9502E-04	-.9264E-04	-.1153E-05
128	.3696E-04	-.6798E-04	-.1915E-01	/	.5634E-05	-.1716E-03	.1659E-06
129	.1063E-03	-.1094E-03	-.1151E-01	/	.1327E-03	-.9216E-04	-.7490E-06
130	.2891E-04	-.9084E-04	-.1671E-01	/	.2155E-03	-.1903E-03	.3172E-06
131	.1169E-03	-.1230E-03	-.7216E-02	/	.2555E-03	-.2405E-04	-.5774E-06
132	.4916E-05	-.1085E-03	-.8783E-02	/	.3594E-03	-.1926E-03	.1873E-05
133	.1289E-03	-.1404E-03	-.6800E-03	/	.2206E-03	-.4924E-06	-.1815E-06
134	-.5384E-05	-.1091E-03	-.2940E-02	/	.3475E-03	-.1428E-03	-.8361E-06
135	.1421E-03	-.1444E-03	.2526E-02	/	.1654E-03	-.7503E-04	-.2079E-05


```
              =============== I M A G E S  3 D ===============
              = Copyright (c) 1984   Celestial Software Inc. =
              ================================================

              SOLVE BEAM LOADS/STRESSES    Version 2.0  07/01/90

        L

Load Case  1:UBC SEISMIC LOAD - NS & EW DIR.

                        BEAM LOADS AND/OR STRESSES

GLoads Node     Fx          Fy          Fz          Mx          My          Mz
LLoads Node    Axial       Y-Shear     Z-Shear     Torsion     Y-Bending   Z-Bending
Stress Node    Axial       Y-Shear     Z-Shear     Torsion     Y-Bending   Z-Bending
Stress Node    Maximum     Minimum     Cmb. Shear
------ ---- ---------- ---------- ---------- ---------- ---------- ----------
                                  ***BEAM  NO.    1***
GLoads    1 -.2192E+02  .3164E+03 -.1370E+03 -.1279E-12  .5684E-13 -.1137E-12
GLoads   99 -.3257E+02 -.1711E+03  .8250E+02 -.1079E+04 -.2929E+03 -.7030E+03
LLoads    1  .3447E+03  .4755E+01  .2192E+02  .9620E-13  .8308E-13  .1279E-12
LLoads   99 -.1897E+03 -.1034E+02  .3257E+02 -.3497E-13  .7615E+03  .1079E+04
                                  ***BEAM  NO.    2***
GLoads   18 -.1952E+02  .2173E+03  .3425E+02 -.4547E-12 -.2842E-13  .1137E-12
GLoads  114 -.3374E+02 -.7523E+02 -.8751E+02  .1309E+04  .3272E+03 -.9389E+03
LLoads   18  .2164E+03 -.3915E+02 -.1952E+02  .1057E-13  .1167E-12 -.4547E-12
LLoads  114 -.9984E+02 -.5788E+02 -.3374E+02  .1629E-13 -.9943E+03  .1309E+04
                                  ***BEAM  NO.    3***
GLoads   99 -.1276E+03  .2912E+02  .2000E+03 -.6887E+03  .1200E+04 -.1734E+03
GLoads  108  .8883E+02  .7414E+02 -.2387E+03 -.1405E+04 -.1309E+03 -.7494E+03
LLoads   99 -.2344E+03 -.2912E+02  .3605E+02 -.1191E+03 -.1200E+04  .7002E+03
LLoads  108  .2542E+03 -.7414E+02  .1500E+02  .1191E+03  .1309E+03  .1587E+04
                                  ***BEAM  NO.    4***
GLoads  114  .1082E+03  .7119E+02 -.1580E+03 -.1350E+04 -.3676E+03 -.1218E+04
GLoads  102 -.1578E+03  .6101E+02  .1084E+03  .8762E+03  .6133E+03  .7548E+03
LLoads  114 -.1886E+03 -.7119E+02 -.3316E+02  .7328E+02  .3676E+03 -.1817E+04
LLoads  102  .1878E+03 -.6101E+02 -.3694E+02 -.7328E+02 -.6133E+03  .1154E+04
                                  ***BEAM  NO.    5***
GLoads   98 -.7686E+03  .6752E+02  .8607E+03 -.1582E+04  .4126E+03 -.1173E+04
GLoads  115  .7321E+03  .2968E+02 -.8971E+03  .2195E+03  .9305E+03 -.1922E+02
LLoads   98  .1154E+04 -.6752E+02 -.1168E+02  .1590E+03 -.4126E+03 -.1963E+04
LLoads  115 -.1157E+04 -.2968E+02 -.3975E+02 -.1590E+03 -.9305E+03  .1525E+03
                                  ***BEAM  NO.    6***
GLoads   92  .2316E+03  .4411E+02  .6268E+03 -.6029E+03 -.2745E+03  .2208E+03
GLoads  115 -.2610E+03  .3438E+02 -.6562E+03  .2528E+03  .4860E+02 -.8461E+02
LLoads   92  .6681E+03 -.4411E+02 -.1131E+02 -.1278E+02  .2745E+03 -.6420E+03
LLoads  115 -.7062E+03 -.3438E+02 -.5457E+01  .1278E+02 -.4860E+02  .2663E+03
                                  ***BEAM  NO.    7***
GLoads   86  .4958E+03  .3609E+02 -.3248E+03  .3181E+03 -.7871E+03  .2739E+03
GLoads  115 -.5091E+03 -.5310E+00  .3115E+03  .6643E+02 -.8566E+03  .2388E+03
LLoads   86  .5915E+03 -.3609E+02 -.3763E+02  .9013E+02  .7871E+03 -.4100E+03
LLoads  115 -.5942E+03  .5310E+00  .5630E+02 -.9013E+02  .8566E+03 -.2309E+03
                                  ***BEAM  NO.    8***
GLoads  134 -.1713E+02  .1994E+02  .5319E+01 -.5984E+03  .7612E+03  .2700E-12
```

```
              ============== I M A G E S  3 D ==============
              = Copyright (c) 1984   Celestial Software Inc. =
              ================================================

              SOLVE BEAM LOADS/STRESSES    Version 2.0  07/01/90

L

Load Case  1:UBC SEISMIC LOAD - NS & EW DIR.

GLoads Node      Fx          Fy          Fz          Mx          My          Mz
LLoads Node    Axial       Y-Shear     Z-Shear     Torsion     Y-Bending   Z-Bending
Stress Node    Axial       Y-Shear     Z-Shear     Torsion     Y-Bending   Z-Bending
Stress Node  Maximum     Minimum   Cmb. Shear
------ ---- ---------- ---------- ---------- ---------- ---------- ----------
GLoads   99  .9513E+01  .3843E+00 -.1294E+02  .5984E+03 -.9438E+03  .1955E+03
LLoads  134 -.1713E+02 -.1994E+02 -.5319E+01 -.5984E+03 -.7612E+03 -.2700E-12
LLoads   99  .9513E+01 -.3843E+00  .1294E+02  .5984E+03  .9438E+03 -.1955E+03
                          ***BEAM  NO.    9***
GLoads  135  .4312E+02 -.2697E+02 -.7990E+01 -.5935E+03 -.5454E+03  .1082E+03
GLoads  114 -.5074E+02  .4729E+02  .3702E+00  .5935E+03  .4618E+03  .6345E+03
LLoads  135 -.4312E+02  .2697E+02 -.7990E+01  .5935E+03  .5454E+03  .1082E+03
LLoads  114  .5074E+02 -.4729E+02  .3702E+00 -.5935E+03 -.4618E+03  .6345E+03
                          ***BEAM  NO.   10***
GLoads  122 -.8420E+01 -.2253E+03 -.8650E+01  .5672E+03 -.6248E+03  .1109E+03
GLoads  124  .3839E-01  .2477E+03  .2682E+00 -.6653E+03  .6248E+03 -.1781E+02
LLoads  122 -.2253E+03 -.8420E+01  .8650E+01 -.6248E+03  .5672E+03 -.1109E+03
LLoads  124  .2477E+03  .3839E-01 -.2682E+00  .6248E+03 -.6653E+03  .1781E+02
                          ***BEAM  NO.   11***
GLoads  124 -.3615E+01 -.1289E+03 -.6823E+01  .1526E+04 -.5026E+03  .1781E+02
GLoads  126 -.4767E+01  .1512E+03 -.1559E+01 -.1584E+04  .5026E+03 -.3048E+02
LLoads  124 -.1289E+03 -.3615E+01  .6823E+01 -.5026E+03  .1526E+04 -.1781E+02
LLoads  126  .1512E+03 -.4767E+01  .1559E+01  .5026E+03 -.1584E+04  .3048E+02
                          ***BEAM  NO.   12***
GLoads  126 -.4820E+01 -.6027E+02 -.4888E+01  .1926E+04 -.2928E+03  .3048E+02
GLoads  128 -.3562E+01  .8262E+02 -.3493E+01 -.1942E+04  .2928E+03 -.1664E+02
LLoads  126 -.6027E+02 -.4820E+01  .4888E+01 -.2928E+03  .1926E+04 -.3048E+02
LLoads  128  .8262E+02 -.3562E+01  .3493E+01  .2928E+03 -.1942E+04  .1664E+02
                          ***BEAM  NO.   13***
GLoads  128 -.3685E+01 -.1911E+02 -.2738E+01  .1802E+04 -.9003E+02  .1664E+02
GLoads  130 -.4696E+01  .4146E+02 -.5644E+01 -.1770E+04  .9003E+02 -.2776E+02
LLoads  128 -.1911E+02 -.3685E+01  .2738E+01 -.9003E+02  .1802E+04 -.1664E+02
LLoads  130  .4146E+02 -.4696E+01  .5644E+01  .9003E+02 -.1770E+04  .2776E+02
                          ***BEAM  NO.   14***
GLoads  130 -.6248E+01  .7646E+01 -.3302E+01  .1049E+04  .5650E+02  .2776E+02
GLoads  132 -.4229E+01  .2029E+02 -.7175E+01 -.9954E+03 -.5650E+02 -.3979E-12
LLoads  130  .7646E+01 -.6248E+01  .3302E+01  .5650E+02  .1049E+04 -.2776E+02
LLoads  132  .2029E+02 -.4229E+01  .7175E+01 -.5650E+02 -.9954E+03  .3979E-12
                          ***TRUSS NO.   15***
GLoads  132  .0000E+00  .1212E+02  .0000E+00  .0000E+00  .0000E+00  .0000E+00
GLoads  134  .0000E+00 -.1212E+02  .0000E+00  .0000E+00  .0000E+00  .0000E+00
LLoads  132  .1212E+02  .0000E+00  .0000E+00  .0000E+00  .0000E+00  .0000E+00
LLoads  134 -.1212E+02  .0000E+00  .0000E+00  .0000E+00  .0000E+00  .0000E+00
                          ***BEAM  NO.   16***
GLoads  123 -.1126E+02  .4352E+03 -.8641E+01  .8411E+03 -.2678E+03  .1384E+03
```



```
              ============== I M A G E S  3 D ==============
              = Copyright (c) 1984   Celestial Software Inc. =
              ================================================

              SOLVE BEAM LOADS/STRESSES    Version 2.0  07/01/90

L

Load Case  1:UBC SEISMIC LOAD - NS & EW DIR.

GLoads Node      Fx          Fy          Fz          Mx          My          Mz
LLoads Node    Axial       Y-Shear     Z-Shear     Torsion     Y-Bending   Z-Bending
Stress Node    Axial       Y-Shear     Z-Shear     Torsion     Y-Bending   Z-Bending
Stress Node  Maximum     Minimum   Cmb. Shear
------ ---- ---------- ---------- ---------- ---------- ---------- ----------
GLoads  125  .2883E+01 -.4128E+03  .2591E+00 -.9390E+03  .2678E+03  .1721E+02
LLoads  123  .4352E+03  .1126E+02 -.8641E+01 -.2678E+03 -.8411E+03  .1384E+03
LLoads  125 -.2883E+01 -.4128E+03  .2591E+00  .2678E+03  .9390E+03  .1721E+02
                          ***BEAM  NO.   17***
GLoads    2 -.7275E+01  .3631E+02 -.5452E+01  .4990E+03 -.7940E+03  .9723E+02
GLoads   19 -.1107E+01 -.1396E+02 -.2930E+01 -.5267E+03  .7940E+03 -.2937E+02
LLoads    2  .3631E+02 -.7275E+01  .5452E+01 -.7940E+03  .4990E+03 -.9723E+02
LLoads   19 -.1396E+02 -.1107E+01  .2930E+01  .7940E+03 -.5267E+03  .2937E+02
                          ***BEAM  NO.   18***
GLoads   19 -.4383E+01  .2523E+02 -.4525E+01  .1223E+04 -.6193E+03  .2937E+02
GLoads   35 -.3999E+01 -.2883E+01 -.3856E+01 -.1230E+04  .6193E+03 -.2515E+02
LLoads   19  .2523E+02 -.4383E+01  .4525E+01 -.6193E+03  .1223E+04 -.2937E+02
LLoads   35 -.2883E+01 -.3999E+01  .3856E+01  .6193E+03 -.1230E+04  .2515E+02
                          ***BEAM  NO.   19***
GLoads   35 -.4425E+01  .3346E+02 -.4085E+01  .1450E+04 -.2727E+03  .2515E+02
GLoads   51 -.3957E+01 -.1111E+02 -.4296E+01 -.1447E+04  .2727E+03 -.2001E+02
LLoads   35  .3346E+02 -.4425E+01  .4085E+01 -.2727E+03  .1450E+04 -.2515E+02
LLoads   51 -.1111E+02 -.3957E+01  .4296E+01  .2727E+03 -.1447E+04  .2001E+02
                          ***BEAM  NO.   20***
GLoads   51 -.4579E+01  .2984E+02 -.4115E+01  .1404E+04  .1235E+03  .2001E+02
GLoads   67 -.3803E+01 -.7488E+01 -.4267E+01 -.1402E+04 -.1235E+03 -.1148E+02
LLoads   51  .2984E+02 -.4579E+01  .4115E+01  .1235E+03  .1404E+04 -.2001E+02
LLoads   67 -.7488E+01 -.3803E+01  .4267E+01 -.1235E+03 -.1402E+04  .1148E+02
                          ***BEAM  NO.   21***
GLoads   67 -.3352E+01  .1581E+02 -.4105E+01  .7864E+03  .4420E+03  .1148E+02
GLoads   83 -.7125E+01  .1213E+02 -.6372E+01 -.7552E+03 -.4420E+03 -.6336E+02
LLoads   67  .1581E+02 -.3352E+01  .4105E+01  .4420E+03  .7864E+03 -.1148E+02
LLoads   83  .1213E+02 -.7125E+01  .6372E+01 -.4420E+03 -.7552E+03  .6336E+02
                          ***BEAM  NO.   22***
GLoads   83 -.2621E+02 -.1078E+02  .3305E+01 -.5499E+03  .5214E+03  .6336E+02
GLoads   99  .1993E+02  .2754E+02 -.9591E+01  .6563E+03 -.5214E+03  .3173E+03
LLoads   83 -.1078E+02 -.2621E+02 -.3305E+01  .5214E+03 -.5499E+03 -.6336E+02
LLoads   99  .2754E+02  .1993E+02  .9591E+01 -.5214E+03  .6563E+03 -.3173E+03
                          ***BEAM  NO.   23***
GLoads    5 -.6450E+01  .5184E+03 -.6594E+01 -.1202E+03 -.1271E+03  .1194E+03
GLoads   22 -.1932E+01 -.4960E+03 -.1787E+01  .6732E+02  .1271E+03 -.6969E+02
LLoads    5  .5184E+03  .6450E+01 -.6594E+01 -.1271E+03  .1202E+03  .1194E+03
LLoads   22 -.4960E+03  .1932E+01 -.1787E+01  .1271E+03 -.6732E+02 -.6969E+02
                          ***BEAM  NO.   24***
GLoads   22 -.2303E+01  .3225E+03 -.1739E+01  .7186E+02 -.9654E+02 -.4892E+02
```

```
KAISER ENGINEERS HANFORD  S/N:801854                                  02/22/95
PAGE   59                      Run ID=MN61973                         08:50:04
              =============== I M A G E S  3 D ===============
              = Copyright (c) 1984   Celestial Software Inc. =
              ================================================

          SOLVE BEAM LOADS/STRESSES    Version 2.0  07/01/90

     L

Load Case  1:UBC SEISMIC LOAD - NS & EW DIR.

GLoads Node      Fx          Fy          Fz          Mx          My          Mz
LLoads Node     Axial       Y-Shear     Z-Shear     Torsion     Y-Bending   Z-Bending
Stress Node     Axial       Y-Shear     Z-Shear     Torsion     Y-Bending   Z-Bending
Stress Node    Maximum     Minimum     Cmb. Shear
------ ---- ---------- ---------- ---------- ---------- ---------- ----------
GLoads   38 -.6079E+01 -.3001E+03 -.6643E+01 -.1791E+02  .9654E+02  .7380E+01
LLoads   22  .3225E+03  .2303E+01 -.1739E+01 -.9654E+02 -.7186E+02 -.4892E+02
LLoads   38 -.3001E+03  .6079E+01 -.6643E+01  .9654E+02  .1791E+02  .7380E+01
                          ***BEAM  NO.   25***
GLoads   38 -.4916E+01  .2214E+03 -.4830E+01 -.6784E+02  .4413E+01  .6932E+02
GLoads   54 -.3466E+01 -.1991E+03 -.3552E+01  .5378E+02 -.4413E+01 -.5338E+02
LLoads   38  .2214E+03  .4916E+01 -.4830E+01  .4413E+01  .6784E+02  .6932E+02
LLoads   54 -.1991E+03  .3466E+01 -.3552E+01 -.4413E+01 -.5378E+02 -.5338E+02
                          ***BEAM  NO.   26***
GLoads   54 -.4162E+01  .1409E+03 -.4764E+01  .2609E+02  .7442E+02 -.1744E+02
GLoads   70 -.4220E+01 -.1186E+03 -.3618E+01 -.3869E+02 -.7442E+02  .1680E+02
LLoads   54  .1409E+03  .4162E+01 -.4764E+01  .7442E+02 -.2609E+02 -.1744E+02
LLoads   70 -.1186E+03  .4220E+01 -.3618E+01 -.7442E+02  .3869E+02  .1680E+02
                          ***BEAM  NO.   27***
GLoads   70 -.5075E+01  .8262E+02 -.4926E+01 -.7252E+02  .1314E+03  .3619E+02
GLoads   86 -.5402E+01 -.5468E+02 -.5552E+01  .8113E+02 -.1314E+03 -.4069E+02
LLoads   70  .8262E+02  .5075E+01 -.4926E+01  .1314E+03  .7252E+02  .3619E+02
LLoads   86 -.5468E+02  .5402E+01 -.5552E+01 -.1314E+03 -.8113E+02 -.4069E+02
                          ***BEAM  NO.   28***
GLoads   86  .1790E+01  .3074E+02 -.2055E+02  .1015E+03  .4833E+03  .4998E+02
GLoads  102 -.8076E+01 -.1398E+02  .1426E+02 -.3887E+03 -.4833E+03 -.1314E+03
LLoads   86  .3074E+02 -.1790E+01 -.2055E+02 -.4833E+03 -.1015E+03  .4998E+02
LLoads  102 -.1398E+02  .8076E+01  .1426E+02 -.4833E+03  .3887E+03 -.1314E+03
                          ***BEAM  NO.   29***
GLoads   11 -.1475E+02 -.2855E+03 -.8286E+01 -.1535E+03  .5633E+03  .3603E+03
GLoads   28  .1697E+01  .3204E+03 -.4765E+01  .1148E+03 -.5633E+03 -.1794E+03
LLoads   11 -.2855E+03 -.8286E+01 -.1475E+02  .5633E+03  .3603E+03 -.1535E+03
LLoads   28  .3204E+03 -.4765E+01  .1697E+01 -.5633E+03 -.1794E+03  .1148E+03
                          ***BEAM  NO.   30***
GLoads   28 -.3384E+01 -.1175E+03 -.4314E+01  .5366E+02  .3734E+03 -.6870E+02
GLoads   44 -.9667E+01  .1523E+03 -.8737E+01 -.5007E+01 -.3734E+03 -.4122E+00
LLoads   28 -.1175E+03 -.4314E+01 -.3384E+01  .3734E+03 -.6870E+02  .5366E+02
LLoads   44  .1523E+03 -.8737E+01 -.9667E+01 -.3734E+03 -.4122E+00 -.5007E+01
                          ***BEAM  NO.   31***
GLoads   44 -.6864E+01 -.2127E+02 -.6098E+01 -.7378E+02  .8524E+02  .6708E+02
GLoads   60 -.6188E+01  .5607E+02 -.6953E+01  .8319E+02 -.8524E+02 -.5965E+02
LLoads   44 -.2127E+02 -.6098E+01 -.6864E+01  .8524E+02  .6708E+02 -.7378E+02
LLoads   60  .5607E+02 -.6953E+01 -.6188E+01 -.8524E+02 -.5965E+02  .8319E+02
                          ***BEAM  NO.   32***
GLoads   60 -.8834E+01  .4057E+02 -.9079E+01  .2483E+02 -.2069E+03 -.3302E+02
```

```
KAISER ENGINEERS HANFORD  S/N:801854                                  02/22/95
PAGE   60                      Run ID=MN61973                         08:50:05
              =============== I M A G E S  3 D ===============
              = Copyright (c) 1984   Celestial Software Inc. =
              ================================================

          SOLVE BEAM LOADS/STRESSES    Version 2.0  07/01/90

     L

Load Case  1:UBC SEISMIC LOAD - NS & EW DIR.

GLoads Node      Fx          Fy          Fz          Mx          My          Mz
LLoads Node     Axial       Y-Shear     Z-Shear     Torsion     Y-Bending   Z-Bending
Stress Node     Axial       Y-Shear     Z-Shear     Torsion     Y-Bending   Z-Bending
Stress Node    Maximum     Minimum     Cmb. Shear
------ ---- ---------- ---------- ---------- ---------- ---------- ----------
GLoads   76 -.4217E+01 -.5767E+01 -.3972E+01 -.8100E+02  .2069E+03  .8381E+02
LLoads   60  .4057E+02 -.9079E+01 -.8834E+01 -.2069E+03 -.3302E+02  .2483E+02
LLoads   76 -.5767E+01 -.3972E+01 -.4217E+01  .2069E+03  .8381E+02 -.8100E+02
                          ***BEAM  NO.   33***
GLoads   76 -.4421E+01  .3735E+02 -.6374E+01 -.6010E+02 -.3928E+03  .5691E+02
GLoads   92 -.1189E+02  .6156E+01 -.9940E+01  .1091E+03  .3928E+03 -.1597E+03
LLoads   76  .3735E+02 -.6374E+01 -.4421E+01 -.3928E+03  .5691E+02 -.6010E+02
LLoads   92  .6156E+01 -.9940E+01 -.1189E+02  .3928E+03 -.1597E+03  .1091E+03
                          ***BEAM  NO.   34***
GLoads   92 -.2247E+02 -.1211E+00  .3890E+01 -.1113E+03 -.2642E+03 -.1817E+03
GLoads  108  .1269E+02  .2622E+02 -.1368E+02  .2562E+03  .2642E+03  .4718E+03
LLoads   92 -.1211E+00  .3890E+01 -.2247E+02 -.2642E+03 -.1817E+03 -.1113E+03
LLoads  108  .2622E+02 -.1368E+02  .1269E+02  .2642E+03  .4718E+03  .2562E+03
                          ***BEAM  NO.   35***
GLoads   17 -.8687E+01  .2451E+03 -.7520E+01  .9834E+03 -.4872E+03  .1049E+03
GLoads   34  .3048E+00 -.2227E+03 -.8616E+00 -.1057E+04  .4872E+03 -.5997E+01
LLoads   17  .2451E+03  .8687E+01 -.7520E+01 -.4872E+03 -.9834E+03  .1049E+03
LLoads   34 -.2227E+03  .3048E+00 -.8616E+00  .4872E+03  .1057E+04 -.5997E+01
                          ***BEAM  NO.   36***
GLoads   34 -.3429E+01  .2322E+03 -.5511E+01  .2458E+04 -.3156E+03  .5997E+01
GLoads   50 -.4952E+01 -.2099E+03 -.2871E+01 -.2487E+04  .3156E+03 -.2275E+02
LLoads   34  .2322E+03  .3429E+01 -.5511E+01 -.3156E+03 -.2458E+04  .5997E+01
LLoads   50 -.2099E+03  .4952E+01 -.2871E+01  .3156E+03  .2487E+04 -.2275E+02
                          ***BEAM  NO.   37***
GLoads   50 -.5622E+01  .1699E+03 -.3870E+01  .2772E+04 -.1005E+03  .2275E+02
GLoads   66 -.2760E+01 -.1475E+03 -.4512E+01 -.2765E+04  .1005E+03  .8738E+01
LLoads   50  .1699E+03  .5622E+01 -.3870E+01 -.1005E+03 -.2772E+04  .2275E+02
LLoads   66 -.1475E+03  .2760E+01 -.4512E+01  .1005E+03  .2765E+04  .8738E+01
                          ***BEAM  NO.   38***
GLoads   66  .2181E+01  .1187E+03 -.3142E+01  .2130E+04  .2510E+03 -.8738E+01
GLoads   82 -.1056E+02 -.9635E+02 -.5240E+01 -.2107E+04 -.2510E+03 -.1315E+03
LLoads   66  .1187E+03 -.2181E+01 -.3142E+01  .2510E+03 -.2130E+04 -.8738E+01
LLoads   82 -.9635E+02  .1056E+02 -.5240E+01 -.2510E+03  .2107E+04 -.1315E+03
                          ***BEAM  NO.   39***
GLoads   82 -.2475E+02  .8218E+02  .3058E+01 -.1393E+04  .1978E+03  .1315E+03
GLoads   98  .1427E+02 -.5424E+02 -.1354E+02  .1621E+04 -.1978E+03  .4050E+03
LLoads   82  .8218E+02  .2475E+02  .3058E+01  .1978E+03  .1393E+04  .1315E+03
LLoads   98 -.5424E+02  .1427E+02 -.1354E+02 -.1978E+03 -.1621E+04  .4050E+03
                          ***BEAM  NO.   40***
GLoads   98 -.1007E+03  .2541E+02 -.2302E+02 -.1418E+04 -.2619E+03  .7679E+03
```

```
              ============== I M A G E S  3 D ==============
              = Copyright (c) 1984   Celestial Software Inc. =
              ================================================

          SOLVE BEAM LOADS/STRESSES    Version 2.0  07/01/90

     L

Load Case  1:UBC SEISMIC LOAD - NS & EW DIR.

GLoads Node      Fx          Fy          Fz          Mx          My          Mz
LLoads Node    Axial       Y-Shear     Z-Shear     Torsion     Y-Bending   Z-Bending
Stress Node    Axial       Y-Shear     Z-Shear     Torsion     Y-Bending   Z-Bending
Stress Node   Maximum     Minimum   Cmb. Shear
------ ---- ---------   ---------   ---------   ---------   ---------   ---------
GLoads  114  .9437E+02  -.8642E+01   .1673E+02   .1090E+04   .2619E+03   .8411E+03
LLoads   98  .2541E+02   .1007E+03  -.2302E+02  -.2619E+03   .1418E+04   .7679E+03
LLoads  114 -.8642E+01  -.9437E+02   .1673E+02   .2619E+03  -.1090E+04   .8411E+03
                          ***BEAM  NO.   41***
GLoads   99  .1365E+02   .3594E+02  -.1069E+02  -.5308E+03   .1153E+04   .3636E+03
GLoads  100 -.1886E+02  -.2205E+02   .5483E+01   .5308E+03  -.1043E+04   .3264E+02
LLoads   99  .1365E+02  -.3594E+02   .1069E+02  -.5308E+03  -.1153E+04  -.3636E+03
LLoads  100 -.1886E+02   .2205E+02  -.5483E+01   .5308E+03   .1043E+04  -.3264E+02
                          ***BEAM  NO.   42***
GLoads  100 -.2540E+02   .3880E+01  -.5736E+01  -.7045E+03   .8092E+03  -.3264E+02
GLoads  101  .2019E+02   .1000E+02   .5296E+00   .7045E+03  -.7664E+03  -.9205E+01
LLoads  100 -.2540E+02  -.3880E+01   .5736E+01  -.7045E+03  -.8092E+03   .3264E+02
LLoads  101  .2019E+02  -.1000E+02  -.5296E+00   .7045E+03   .7664E+03   .9205E+01
                          ***BEAM  NO.   43***
GLoads  101 -.9720E+02  -.1060E+02  -.4147E+01  -.7047E+03   .7553E+03   .9205E+01
GLoads  102  .9199E+02   .2449E+02  -.1060E+01   .7047E+03  -.7342E+03  -.2490E+03
LLoads  101 -.9720E+02   .1060E+02   .4147E+01  -.7047E+03  -.7553E+03  -.9205E+01
LLoads  102  .9199E+02  -.2449E+02   .1060E+01   .7047E+03   .7342E+03   .2490E+03
                          ***BEAM  NO.   44***
GLoads  102 -.7984E+01  -.3185E+02  -.7453E+02  -.5259E+03   .3091E+03  -.1643E+03
GLoads  103  .2078E+01   .4759E+02   .6862E+02  -.8978E+02  -.2311E+03   .1643E+03
LLoads  102  .7453E+02   .3185E+02   .7984E+01   .1643E+03  -.3091E+03   .5259E+03
LLoads  103 -.6862E+02  -.4759E+02  -.2078E+01  -.1643E+03   .2311E+03   .8978E+02
                          ***BEAM  NO.   45***
GLoads  103 -.1086E+02   .1254E+02   .7805E+00   .8978E+02  -.4031E+03  -.3324E+03
GLoads  104  .4955E+01   .3203E+01  -.6686E+01  -.1739E+02   .5257E+03   .3324E+03
LLoads  103 -.7805E+00  -.1254E+02   .1086E+02   .3324E+03   .4031E+03  -.8978E+02
LLoads  104  .6686E+01  -.3203E+01  -.4955E+01  -.3324E+03  -.5257E+03   .1739E+02
                          ***BEAM  NO.   46***
GLoads  104 -.3824E+01   .7463E+01   .1882E+02   .1739E+02  -.9798E+03  -.1295E+03
GLoads  105 -.2081E+01   .8284E+01  -.2472E+02  -.2375E+02   .9933E+03   .1295E+03
LLoads  104 -.1882E+02  -.7463E+01   .3824E+01   .1295E+03   .9798E+03  -.1739E+02
LLoads  105  .2472E+02  -.8284E+01   .2081E+01  -.1295E+03  -.9933E+03   .2375E+02
                          ***BEAM  NO.   47***
GLoads  105  .1436E+01   .8117E+01   .5753E+01   .2375E+02  -.8498E+03   .4053E+02
GLoads  106 -.7341E+01   .7631E+01  -.1166E+02  -.1999E+02   .7818E+03  -.4053E+02
LLoads  105 -.5753E+01  -.8117E+01  -.1436E+01  -.4053E+02   .8498E+03  -.2375E+02
LLoads  106  .1166E+02  -.7631E+01   .7341E+01   .4053E+02  -.7818E+03   .1999E+02
                          ***BEAM  NO.   48***
GLoads  106  .8036E+01   .6987E+01  -.3745E+02   .1999E+02  -.5799E+02   .2470E+03
```



```
              ============== I M A G E S  3 D ==============
              = Copyright (c) 1984   Celestial Software Inc. =
              ================================================

          SOLVE BEAM LOADS/STRESSES    Version 2.0  07/01/90

     L

Load Case  1:UBC SEISMIC LOAD - NS & EW DIR.

GLoads Node      Fx          Fy          Fz          Mx          My          Mz
LLoads Node    Axial       Y-Shear     Z-Shear     Torsion     Y-Bending   Z-Bending
Stress Node    Axial       Y-Shear     Z-Shear     Torsion     Y-Bending   Z-Bending
Stress Node   Maximum     Minimum   Cmb. Shear
------ ---- ---------   ---------   ---------   ---------   ---------   ---------
LLoads  107 -.1394E+02   .8760E+01   .3155E+02  -.3373E+02  -.1123E+03  -.2470E+03
LLoads  106  .3745E+02  -.6987E+01  -.8036E+01  -.2470E+03   .5799E+02  -.1999E+02
LLoads  107 -.3155E+02  -.8760E+01  -.1394E+02   .2470E+03   .1123E+03   .3373E+02
                          ***BEAM  NO.   49***
GLoads  107  .8381E+01   .2584E+02  -.1389E+03   .3373E+02   .1152E+04   .2226E+03
GLoads  108 -.1429E+02  -.1009E+02   .1330E+03   .2448E+03  -.1328E+04  -.2226E+03
LLoads  107  .1389E+03  -.2584E+02  -.8381E+01  -.2226E+03  -.1152E+04  -.3373E+02
LLoads  108 -.1330E+03   .1009E+02   .1429E+02   .2226E+03   .1328E+04  -.2448E+03
                          ***BEAM  NO.   50***
GLoads  108 -.1447E+02   .1903E+02  -.1329E+02   .5558E+03   .1214E+04   .1632E+03
GLoads  109  .8690E+01  -.3617E+01   .7507E+01  -.5558E+03  -.1057E+04   .8519E+01
LLoads  108 -.1447E+02  -.1903E+02   .1329E+02   .5558E+03  -.1214E+04  -.1632E+03
LLoads  109  .8690E+01   .3617E+01  -.7507E+01  -.5558E+03   .1057E+04  -.8519E+01
                          ***BEAM  NO.   51***
GLoads  109 -.1618E+02   .5744E+01  -.1428E+02   .5977E+03   .1829E+02  -.8519E+01
GLoads  110  .1040E+02   .9665E+01   .8505E+01  -.5977E+03   .1545E+03  -.2121E+02
LLoads  109 -.1618E+02  -.5744E+01   .1428E+02   .5977E+03  -.1829E+02   .8519E+01
LLoads  110  .1040E+02  -.9665E+01  -.8505E+01  -.5977E+03  -.1545E+03   .2121E+02
                          ***BEAM  NO.   52***
GLoads  110 -.2385E+02   .7818E+01  -.7282E+01   .3280E+03  -.9395E+03   .2121E+02
GLoads  111  .1807E+02   .7591E+01   .1504E+01   .3280E+03   .1006E+04  -.1950E+02
LLoads  110 -.2385E+02  -.7818E+01   .7282E+01   .3280E+03   .9395E+03  -.2121E+02
LLoads  111  .1807E+02  -.7591E+01  -.1504E+01  -.3280E+03  -.1006E+04   .1950E+02
                          ***BEAM  NO.   53***
GLoads  111 -.3305E+02   .8116E+01  -.1750E+01   .4089E+02  -.1200E+04   .1950E+02
GLoads  112  .2727E+02   .7293E+01  -.4028E+01  -.4089E+02   .1183E+04  -.1325E+02
LLoads  111 -.3305E+02  -.8116E+01   .1750E+01   .4089E+02   .1200E+04  -.1950E+02
LLoads  112  .2727E+02  -.7293E+01   .4028E+01  -.4089E+02  -.1183E+04   .1325E+02
                          ***BEAM  NO.   54***
GLoads  112 -.2783E+02   .1536E+01   .7412E+01  -.4007E+03  -.6646E+03   .1325E+02
GLoads  113  .2205E+02   .1387E+02  -.1319E+02   .4007E+03   .5083E+03  -.1068E+03
LLoads  112 -.2783E+02  -.1536E+01  -.7412E+01  -.4007E+03   .6646E+03  -.1325E+02
LLoads  113  .2205E+02  -.1387E+02   .1319E+02   .4007E+03  -.5083E+03   .1068E+03
                          ***BEAM  NO.   55***
GLoads  113  .1515E+02   .5969E+02   .7410E+00  -.2817E+03   .1787E+03   .1068E+03
GLoads  114 -.2093E+02  -.4428E+02  -.6519E+01   .2817E+03  -.2338E+03   .6816E+03
LLoads  113  .1515E+02  -.5969E+02  -.7410E+00  -.2817E+03  -.1787E+03  -.1068E+03
LLoads  114 -.2093E+02   .4428E+02   .6519E+01   .2817E+03   .2338E+03  -.6816E+03
                          ***BEAM  NO.   56***
GLoads  115 -.6423E+04   .1601E+05  -.6422E+04   .1367E+06  -.2365E+02  -.1368E+06
```

========== I M A G E S 3 D ==========
= Copyright (c) 1984 Celestial Software Inc. =
==========

SOLVE BEAM LOADS/STRESSES Version 2.0 07/01/90

L

Load Case 1:UBC SEISMIC LOAD - NS & EW DIR.

GLoads Node LLoads Node Stress Node Stress Node	Fx Axial Axial Maximum	Fy Y-Shear Y-Shear Minimum	Fz Z-Shear Z-Shear Cmb. Shear	Mx Torsion Torsion	My Y-Bending Y-Bending	Mz Z-Bending Z-Bending
GLoads 120	.6225E+04	-.1548E+05	.6224E+04	.1985E+06	.2365E+02	-.1984E+06
LLoads 115	-.1601E+05	.8313E+04	-.3659E+04	.2365E+02	.7796E+05	.1769E+06
LLoads 120	.1548E+05	-.8057E+04	.3546E+04	-.2365E+02	.1130E+06	.2569E+06
			BEAM NO. 57			
GLoads 120	.5025E+04	-.1452E+05	.5026E+04	-.1985E+06	-.2365E+02	.1984E+06
GLoads 121	-.5258E+04	.1514E+05	-.5260E+04	-.1230E+06	.2365E+02	.1230E+06
LLoads 120	.1452E+05	-.6506E+04	.2862E+04	.2365E+02	-.1130E+06	-.2569E+06
LLoads 121	-.1514E+05	.6808E+04	-.2994E+04	-.2365E+02	-.7003E+05	-.1592E+06
			BEAM NO. 58			
GLoads 116	-.2350E+04	.2743E+04	-.4345E+03	-.1882E+05	-.2702E+03	.2377E+05
GLoads 121	.2272E+04	-.2533E+04	.3561E+03	.1882E+05	.8572E+04	.3162E+05
LLoads 116	-.2350E+04	.2743E+04	-.4345E+03	-.1882E+05	-.2702E+03	.2377E+05
LLoads 121	.2272E+04	-.2533E+04	.3561E+03	.1882E+05	.8572E+04	.3162E+05
			BEAM NO. 59			
GLoads 117	-.4370E+03	.2742E+04	-.2351E+04	-.2377E+05	.2209E+03	.1880E+05
GLoads 121	.3586E+03	-.2533E+04	.2272E+04	-.3162E+05	-.8574E+04	-.1880E+05
LLoads 117	-.2351E+04	.2742E+04	.4370E+03	.1880E+05	.2209E+03	.2377E+05
LLoads 121	.2272E+04	-.2533E+04	-.3586E+03	-.1880E+05	-.8574E+04	.3162E+05
			BEAM NO. 60			
GLoads 118	-.2350E+04	.5248E+04	-.4370E+03	-.1880E+05	.2293E+03	.8963E+04
GLoads 121	.2272E+04	-.5039E+04	.3586E+03	.1880E+05	-.8584E+04	-.1170E+06
LLoads 118	.2350E+04	.5248E+04	.4370E+03	.1880E+05	.2293E+03	-.8963E+04
LLoads 121	-.2272E+04	-.5039E+04	-.3586E+03	-.1880E+05	-.8584E+04	.1170E+06
			BEAM NO. 61			
GLoads 119	-.4345E+03	.5248E+04	-.2351E+04	-.8956E+04	-.2617E+03	.1882E+05
GLoads 121	.3561E+03	-.5039E+04	.2272E+04	.1170E+06	.8563E+04	-.1882E+05
LLoads 119	.2351E+04	.5248E+04	-.4345E+03	-.1882E+05	-.2617E+03	-.8956E+04
LLoads 121	-.2272E+04	-.5039E+04	.3561E+03	.1882E+05	.8563E+04	.1170E+06
			BEAM NO. 62			
GLoads 125	-.2318E+01	.2860E+03	-.6271E+01	.2171E+04	-.1644E+03	-.1721E+02
GLoads 127	-.6064E+01	-.2637E+03	-.2111E+01	-.2216E+04	.1644E+03	-.2400E+02
LLoads 125	.2860E+03	.2318E+01	-.6271E+01	-.1644E+03	-.2171E+04	-.1721E+02
LLoads 127	-.2637E+03	.6064E+01	-.2111E+01	.1644E+03	.2216E+04	-.2400E+02
			BEAM NO. 63			
GLoads 127	-.4535E+01	.1995E+03	-.3007E+01	.2437E+04	.4184E+02	.2400E+02
GLoads 129	-.3847E+01	-.1772E+03	-.5375E+01	-.2411E+04	-.4184E+02	-.1642E+02
LLoads 127	.1995E+03	.4535E+01	-.3007E+01	.4184E+02	-.2437E+04	.2400E+02
LLoads 129	-.1772E+03	.3847E+01	-.5375E+01	-.4184E+02	.2411E+04	-.1642E+02
			BEAM NO. 64			
GLoads 129	-.3905E+01	.1323E+03	.1658E+01	.1368E+04	.4534E+03	.1642E+02

========== I M A G E S 3 D ==========
= Copyright (c) 1984 Celestial Software Inc. =
==========

SOLVE BEAM LOADS/STRESSES Version 2.0 07/01/90

L

Load Case 1:UBC SEISMIC LOAD - NS & EW DIR.

GLoads Node LLoads Node Stress Node Stress Node	Fx Axial Axial Maximum	Fy Y-Shear Y-Shear Minimum	Fz Z-Shear Z-Shear Cmb. Shear	Mx Torsion Torsion	My Y-Bending Y-Bending	Mz Z-Bending Z-Bending
GLoads 131	-.4476E+01	-.1100E+03	-.1004E+02	-.1239E+04	-.4534E+03	-.2271E+02
LLoads 129	.1323E+03	.3905E+01	.1658E+01	.4534E+03	-.1368E+04	.1642E+02
LLoads 131	-.1100E+03	.4476E+01	-.1004E+02	-.4534E+03	.1239E+04	-.2271E+02
			BEAM NO. 65			
GLoads 131	-.6440E+01	.3178E+02	-.6245E+01	-.3403E+03	.1168E+03	.2271E+02
GLoads 133	-.4037E+01	-.3837E+01	-.4232E+01	.3127E+03	-.1168E+03	.1034E+02
LLoads 131	.3178E+02	.6440E+01	-.6245E+01	.1168E+03	.3403E+03	.2271E+02
LLoads 133	-.3837E+01	.4037E+01	-.4232E+01	-.1168E+03	-.3127E+03	.1034E+02
			BEAM NO. 66			
GLoads 133	.4038E+01	-.1315E+02	.2263E+01	-.7518E+03	-.7140E+03	-.1034E+02
GLoads 135	-.1032E+02	.2992E+02	-.8549E+01	.8410E+03	.7140E+03	-.1082E+03
LLoads 133	-.1315E+02	.4038E+01	.2263E+01	-.7140E+03	.7518E+03	-.1034E+02
LLoads 135	.2992E+02	.1032E+02	-.8549E+01	.7140E+03	-.8410E+03	-.1082E+03
			BEAM NO. 67			
GLoads 115	-.9616E+03	-.4045E+04	-.8976E+02	-.3377E+05	.2450E+04	.3527E+05
GLoads 116	.5230E+03	.5215E+04	-.3488E+03	.1882E+05	.2702E+03	-.2377E+05
LLoads 115	.4152E+04	-.2224E+03	.8976E+02	.3632E+04	-.3367E+05	.3527E+05
LLoads 116	-.5224E+04	-.4183E+03	-.3488E+03	-.3632E+04	.1846E+05	-.2377E+05
			BEAM NO. 68			
GLoads 115	-.9052E+02	-.4046E+04	-.9604E+03	-.3541E+05	-.2483E+04	.3367E+05
GLoads 117	-.3480E+03	.5215E+04	.5218E+03	.2377E+05	.2209E+03	-.1880E+05
LLoads 115	.4152E+04	-.2212E+03	.9052E+02	-.3581E+04	.3357E+05	.3541E+05
LLoads 117	-.5224E+04	-.4195E+03	.3480E+03	.3581E+04	-.1846E+05	-.2377E+05
			BEAM NO. 69			
GLoads 115	.8298E+03	-.3990E+04	-.8935E+02	-.3380E+05	-.2499E+04	.3407E+05
GLoads 118	-.1268E+04	.5159E+04	-.3492E+03	.1880E+05	-.2293E+03	-.8963E+04
LLoads 115	.4074E+04	-.1028E+03	.8935E+02	-.3588E+04	.3371E+05	-.3407E+05
LLoads 118	-.5303E+04	.3250E+03	.3492E+03	.3588E+04	-.1845E+05	.8963E+04
			BEAM NO. 70			
GLoads 115	-.9093E+02	-.3989E+04	.8310E+03	-.3421E+05	.2433E+04	.3364E+05
GLoads 119	-.3476E+03	.5159E+04	-.1270E+04	.8956E+04	.2617E+03	-.1882E+05
LLoads 115	.4074E+04	-.1040E+03	-.9093E+02	.3624E+04	-.3353E+05	-.3421E+05
LLoads 119	-.5303E+04	.3263E+03	-.3476E+03	-.3624E+04	.1847E+05	.8956E+04

```
KAISER ENGINEERS HANFORD  S/N:801854                                  02/22/95
PAGE   65                        Run ID=MN61973                       08:50:07
              ============== I M A G E S  3 D ==============
              = Copyright (c) 1984   Celestial Software Inc. =
              ================================================

            SOLVE BEAM LOADS/STRESSES    Version 2.0  07/01/90

       L

Load Case  1:UBC SEISMIC LOAD - NS & EW DIR.

                  MAXIMUM STRESS SUMMARY FOR BEAMS/TRUSSES
                     WITHIN SPECIFIED RANGE    1-   70

            Maximum (absolute) Stress =  .1381E+04 at BEAM    56

  Beam     Axial     Y-Shear    Z-Shear    Torsion   Y-Bending  Z-Bending
 ----  ---------  ---------  ---------  ---------  ---------  ---------
   56   .4397E+03  .4578E+03 -.2015E+03 -.1344E-02  .2876E+03  .6540E+03
        Maximum    Minimum   Cmb. Shear
       ---------  ---------  ----------
       .1381E+04 -.5019E+03  .6907E+03
```



```
KAISER ENGINEERS HANFORD  S/N:801854                                  02/22/95
PAGE   66                        Run ID=MN61973                       08:50:07
              ============== I M A G E S  3 D ==============
              = Copyright (c) 1984   Celestial Software Inc. =
              ================================================

            SOLVE PLATE LOADS/STRESSES    Version 2.0  07/01/90

       L

Load Case  1:UBC SEISMIC LOAD - NS & EW DIR.

                          PLATE LOADS AND/OR STRESSES

GLoads Node     Fx         Fy         Fz         Mx         My         Mz
------ ----  ---------  ---------  ---------  ---------  ---------  ---------
                                   ***PLATE    1***
GLoads    2 -.9970E+02 -.1204E+03 -.1178E+02  .3846E+02 -.1515E+03  .0000E+00
GLoads    3 -.2125E+03  .4571E+03 -.1160E+02 -.2002E+03 -.4130E+02  .0000E+00
GLoads   20  .1246E+03  .4555E+02  .6526E+01 -.2909E+03  .1624E+03  .0000E+00
GLoads   19  .1877E+03 -.3822E+03  .1685E+02 -.6171E+02 -.3900E+02  .0000E+00
                                   ***PLATE    2***
GLoads    3 -.2597E+02  .1060E+03  .6897E+01  .2002E+03 -.1552E+03  .0000E+00
GLoads    4 -.3094E+03  .7286E+03  .1585E+01 -.6005E+02 -.1318E+03  .0000E+00
GLoads   21  .8580E+02 -.1887E+03 -.2014E+02 -.9498E+02  .2888E+02  .0000E+00
GLoads   20  .2496E+03 -.6459E+03  .1166E+02  .1414E+03  .4559E+01  .0000E+00
                                   ***PLATE    3***
GLoads    4  .9448E+02  .4618E+03  .1165E+02  .6005E+02 -.4049E+02  .0000E+00
GLoads    5 -.3930E+03  .1091E+04 -.2930E+02 -.3087E+03 -.2450E+03  .0000E+00
GLoads   22  .3661E+02 -.6100E+03 -.8475E+01 -.2415E+03 -.3444E+03  .0000E+00
GLoads   21  .2620E+03 -.9424E+03  .2612E+02  .1019E+03  .1137E+03  .0000E+00
                                   ***PLATE    4***
GLoads    5 -.3072E+02  .1262E+04 -.4563E+03  .0000E+00  .2254E+03  .2844E+03
GLoads    6  .1178E+02  .5505E+03  .6360E+02  .0000E+00  .5075E+02 -.1891E+02
GLoads   23  .2683E+02 -.1108E+04  .3304E+03  .6596E+02 -.3956E+02  .0000E+00
GLoads   22 -.7886E+01 -.7042E+03  .6226E+02  .0000E+00  .3618E+03  .2172E+03
                                   ***PLATE    5***
GLoads    6  .1143E+01  .9113E+03 -.4077E+03  .0000E+00  .7913E+02  .1891E+02
GLoads    7  .4777E+00  .2286E+03 -.2698E+02  .0000E+00  .1453E+03 -.1102E+03
GLoads   24  .1339E+02 -.8455E+03  .3554E+03  .1546E+02  .5461E+02  .0000E+00
GLoads   23 -.1501E+02 -.2943E+03  .7931E+02 -.7113E+02 -.6412E+02  .0000E+00
                                   ***PLATE    6***
GLoads    7 -.1440E+02  .7048E+03 -.3444E+03  .0000E+00 -.2831E+02  .1102E+03
GLoads    8 -.7791E+01  .6710E+02 -.6875E+02  .0000E+00  .1274E+03  .1687E+01
GLoads   25  .1474E+02 -.6535E+03  .3179E+03 -.1309E+03  .1572E+03  .0000E+00
GLoads   24  .7448E+01 -.1184E+03  .9528E+02 -.2453E+03 -.1486E+03  .0000E+00
                                   ***PLATE    7***
GLoads    8 -.7880E+01  .5264E+03 -.2763E+03  .0000E+00 -.1301E+03 -.1687E+01
GLoads    9 -.1455E+02 -.7970E+02 -.1157E+03  .0000E+00  .2426E+02  .1188E+03
GLoads   26  .7626E+01 -.4766E+03  .2615E+03 -.2501E+03  .1512E+03  .0000E+00
GLoads   25  .1481E+02  .2988E+02  .1305E+03 -.1264E+03 -.1527E+03  .0000E+00
                                   ***PLATE    8***
GLoads    9  .1762E+01  .3352E+03 -.2023E+03  .0000E+00 -.1474E+03 -.1188E+03
GLoads   10  .2527E+01 -.2440E+03 -.1627E+03  .0000E+00 -.8768E+02  .1600E+01
GLoads   27 -.1782E+02 -.2740E+03  .2027E+03 -.5207E+02  .5135E+02  .0000E+00
GLoads   26  .1353E+02  .1828E+03  .1623E+03  .2928E+02 -.5340E+02  .0000E+00
```

========== I M A G E S 3 D ==========
= Copyright (c) 1984 Celestial Software Inc. =
==========

SOLVE PLATE LOADS/STRESSES Version 2.0 07/01/90

L

Load Case 1:UBC SEISMIC LOAD - NS & EW DIR.

GLoads	Node	Fx	Fy	Fz	Mx	My	Mz
				PLATE 9			
GLoads	10	.1074E+02	.2302E+02	-.8405E+02	.0000E+00	-.4136E+02	-.1600E+01
GLoads	11	-.3565E+02	-.5098E+03	-.2046E+03	.0000E+00	-.2272E+03	.3335E+03
GLoads	28	-.2885E+01	.1002E+03	.1274E+03	.0000E+00	-.3789E+03	.2668E+03
GLoads	27	.2780E+02	.3866E+03	.1612E+03	.5055E+02	.5013E+02	.0000E+00
				PLATE 10			
GLoads	11	-.1970E+03	-.4933E+03	-.2149E+02	-.2383E+03	.3140E+03	.0000E+00
GLoads	12	-.5280E+02	-.2133E+02	.1818E+02	.1353E+03	.7994E+02	.0000E+00
GLoads	29	.1571E+03	.3837E+03	.2604E+02	.1874E+03	-.1316E+03	.0000E+00
GLoads	28	.9269E+02	.1310E+03	-.2272E+02	-.1574E+03	.4083E+03	.0000E+00
				PLATE 11			
GLoads	12	-.1649E+03	-.2701E+03	-.1933E+01	-.1353E+03	.1770E+03	.0000E+00
GLoads	13	-.1625E+03	.2543E+03	.1926E+01	.2288E+03	.2200E+03	.0000E+00
GLoads	30	.1627E+03	.2206E+03	.1750E+02	.1046E+03	-.2800E+02	.0000E+00
GLoads	29	.1647E+03	-.2048E+03	-.1749E+02	-.1983E+03	-.7446E+02	.0000E+00
				PLATE 12			
GLoads	13	-.1279E+03	-.1446E+03	-.1756E+02	-.2288E+03	.7035E+02	.0000E+00
GLoads	14	-.2253E+03	.4035E+03	-.8314E+01	.1368E+03	.2395E+03	.0000E+00
GLoads	31	.1356E+03	.1088E+03	.2148E+02	-.6337E+02	.9311E+02	.0000E+00
GLoads	30	.2176E+03	-.3677E+03	.4394E+01	-.4138E+03	-.2033E+03	.0000E+00
				PLATE 13			
GLoads	14	-.9289E+02	-.4618E+02	-.1513E+02	-.1368E+03	-.4806E+02	.0000E+00
GLoads	15	-.2785E+03	.5236E+03	-.1756E+02	.1801E+02	.1680E+03	.0000E+00
GLoads	32	.1040E+03	.1504E+02	.1802E+02	-.2372E+03	.1345E+03	.0000E+00
GLoads	31	.2674E+03	-.4925E+03	.1467E+02	-.3632E+03	-.2475E+03	.0000E+00
				PLATE 14			
GLoads	15	-.5661E+02	.5089E+02	-.1272E+02	-.1801E+02	-.1139E+03	.0000E+00
GLoads	16	-.3247E+03	.6381E+03	-.8472E+01	.2951E+02	.8452E+02	.0000E+00
GLoads	33	.7245E+02	-.8489E+02	.4985E+01	-.2074E+03	.1561E+03	.0000E+00
GLoads	32	.3089E+03	-.6041E+03	.1621E+02	-.2704E+03	-.1796E+03	.0000E+00
				PLATE 15			
GLoads	16	-.2456E+02	.1579E+03	-.1141E+02	-.2951E+02	-.1355E+03	.0000E+00
GLoads	17	-.3691E+03	.7706E+03	-.3925E+02	-.3358E+03	-.3415E+02	.0000E+00
GLoads	34	.5431E+02	-.1995E+03	.2208E+02	-.5219E+03	.1860E+02	.0000E+00
GLoads	33	.3394E+03	-.7290E+03	.2857E+02	-.2272E+03	-.1093E+03	.0000E+00
				PLATE 16			
GLoads	19	-.1889E+03	-.1849E+03	.5360E+01	.1927E+03	-.3009E+03	.0000E+00
GLoads	20	-.1621E+03	.4540E+03	-.8652E+01	-.1050E+02	.6451E+02	.0000E+00
GLoads	36	.1926E+03	.1111E+03	-.1016E+02	-.2100E+03	.2012E+03	.0000E+00
GLoads	35	.1584E+03	-.3802E+03	.1346E+02	-.4463E+02	-.2219E+03	.0000E+00
				PLATE 17			
GLoads	20	-.1801E+03	.6129E+02	.2238E+02	.1600E+03	-.2315E+03	.0000E+00

========== I M A G E S 3 D ==========
= Copyright (c) 1984 Celestial Software Inc. =
==========

SOLVE PLATE LOADS/STRESSES Version 2.0 07/01/90

L

Load Case 1:UBC SEISMIC LOAD - NS & EW DIR.

GLoads	Node	Fx	Fy	Fz	Mx	My	Mz
				PLATE 18			
GLoads	21	-.1423E+03	.6578E+03	-.2441E+02	-.1008E+03	-.2140E+03	.0000E+00
GLoads	37	.1931E+03	-.1388E+03	-.2497E+02	-.1570E+03	-.1232E+03	.0000E+00
GLoads	36	.1293E+03	-.5803E+03	.2700E+02	.5303E+02	-.1062E+03	.0000E+00
				PLATE 19			
GLoads	21	-.1735E+03	.3883E+03	.5034E+02	.9384E+02	.7136E+02	.0000E+00
GLoads	22	.3175E+02	.6538E+03	-.2047E+02	.1023E+03	-.7078E+03	.0000E+00
GLoads	38	.1345E+03	-.4256E+03	-.6617E+02	.2476E+03	-.7383E+03	.0000E+00
GLoads	37	.7240E+01	-.6165E+03	.3630E+02	.2133E+03	.1905E+03	.0000E+00
				PLATE 19			
GLoads	22	-.2219E+02	.7432E+03	.4265E+01	.0000E+00	.6599E+03	-.9855E+02
GLoads	23	.4626E+02	.5022E+03	-.1573E+03	.4052E+02	-.5054E+01	.0000E+00
GLoads	39	.3471E+02	-.7194E+03	.2739E+02	.1528E+03	-.9573E+02	.0000E+00
GLoads	38	-.5878E+02	-.5259E+03	.1256E+03	.0000E+00	.6960E+03	-.2376E+03
				PLATE 20			
GLoads	23	-.2189E+02	.8035E+03	-.2162E+03	-.3536E+02	.1087E+03	.0000E+00
GLoads	24	.2079E+02	.2070E+03	-.1577E+03	.1368E+03	.2880E+03	.0000E+00
GLoads	40	.2506E+02	-.7378E+03	.1874E+03	.7893E+01	.2531E+03	.0000E+00
GLoads	39	-.2396E+02	-.2728E+03	.1866E+03	-.1336E+03	.6083E+02	.0000E+00
				PLATE 21			
GLoads	24	-.5437E+01	.6604E+03	-.2567E+03	.9300E+02	-.1940E+03	.0000E+00
GLoads	25	.3242E+01	.1331E+02	-.1642E+03	.1293E+03	.3249E+03	.0000E+00
GLoads	41	.7688E+01	-.6107E+03	.2392E+03	-.1343E+03	.3276E+03	.0000E+00
GLoads	40	-.5493E+01	-.6302E+02	.1817E+03	-.1362E+03	-.2891E+03	.0000E+00
				PLATE 22			
GLoads	25	.3400E+01	.5138E+03	-.2480E+03	.1281E+03	-.3294E+03	.0000E+00
GLoads	26	-.6904E+01	-.1299E+03	-.1725E+03	.7917E+02	.1830E+03	.0000E+00
GLoads	42	-.5830E+01	-.4668E+03	.2484E+03	-.1504E+03	.2759E+03	.0000E+00
GLoads	41	.9334E+01	.8294E+02	.1720E+03	-.1339E+03	-.3269E+03	.0000E+00
				PLATE 23			
GLoads	26	.2193E+02	.3272E+03	-.2151E+03	.1416E+03	-.2808E+03	.0000E+00
GLoads	27	-.1997E+02	-.2598E+03	-.1575E+03	-.1396E+02	-.1252E+03	.0000E+00
GLoads	43	-.2612E+02	.2690E+03	.2283E+03	-.1014E+03	-.7217E+02	.0000E+00
GLoads	42	.2415E+02	.2017E+03	.1443E+03	.1700E+02	-.2361E+03	.0000E+00
				PLATE 24			
GLoads	27	.4617E+02	.5069E+02	-.1702E+03	.1548E+02	.2377E+02	.0000E+00
GLoads	28	-.3004E+02	-.2709E+03	-.2681E+02	.0000E+00	-.6915E+03	-.1872E+02
GLoads	44	-.5429E+02	-.8666E+01	.1586E+03	.0000E+00	-.7442E+03	-.1747E+03
GLoads	43	.3816E+02	.2289E+03	.3839E+02	.1460E+03	.1048E+03	.0000E+00
				PLATE 25			
GLoads	28	-.2228E+02	-.2585E+03	-.3303E+02	-.1100E+02	.8520E+03	.0000E+00
GLoads	29	-.1398E+03	.7304E+01	.5299E+02	.7530E+02	-.4478E+02	.0000E+00
GLoads	45	.2850E+02	.2278E+03	.4315E+02	.2029E+03	-.2074E+03	.0000E+00

```
============== I M A G E S  3 D ==============
= Copyright (c) 1984   Celestial Software Inc. =
===============================================
```

SOLVE PLATE LOADS/STRESSES Version 2.0 07/01/90

L

Load Case 1:UBC SEISMIC LOAD - NS & EW DIR.

GLoads	Node	Fx	Fy	Fz	Mx	My	Mz
GLoads	44	.1336E+03	.2333E+02	-.6310E+02	.1717E+03	.8582E+03	.0000E+00
				PLATE 26			
GLoads	29	-.1465E+03	-.2806E+03	-.2613E+02	-.6447E+02	.2509E+03	.0000E+00
GLoads	30	-.1851E+03	.2455E+03	.2748E+02	.2450E+03	.3217E+03	.0000E+00
GLoads	46	.1261E+03	.2355E+03	.3149E+02	.4037E+02	.1894E+03	.0000E+00
GLoads	45	.2055E+03	-.2005E+03	-.3284E+02	-.1911E+03	.1324E+03	.0000E+00
				PLATE 27			
GLoads	30	-.1598E+03	-.1929E+03	-.1396E+02	.6417E+02	-.9043E+02	.0000E+00
GLoads	31	-.2217E+03	.3929E+03	.9029E+01	.2873E+03	.4382E+03	.0000E+00
GLoads	47	.1494E+03	.1605E+03	.1745E+02	-.1656E+03	.3316E+03	.0000E+00
GLoads	46	.2320E+03	-.3604E+03	-.1252E+02	-.2943E+03	-.2778E+03	.0000E+00
				PLATE 28			
GLoads	31	-.1459E+03	-.1036E+03	-.9766E+01	.1393E+03	-.2838E+03	.0000E+00
GLoads	32	-.2488E+03	.5000E+03	-.1928E+01	.2667E+03	.4044E+03	.0000E+00
GLoads	48	.1474E+03	.7248E+02	.1145E+02	-.2805E+03	.4060E+03	.0000E+00
GLoads	47	.2473E+03	-.4689E+03	.2440E+00	-.3828E+03	-.3822E+03	.0000E+00
				PLATE 29			
GLoads	32	-.1287E+03	-.5404E+01	.3109E+01	.2409E+03	-.3594E+03	.0000E+00
GLoads	33	-.2632E+03	.5950E+03	-.8706E+01	.2442E+03	.2551E+03	.0000E+00
GLoads	49	.1422E+03	-.2655E+02	-.6802E+01	-.3083E+03	.2831E+03	.0000E+00
GLoads	48	.2497E+03	-.5630E+03	.1240E+02	-.2999E+03	-.4141E+03	.0000E+00
				PLATE 30			
GLoads	33	-.1132E+03	.1245E+03	.1056E+02	.1904E+03	-.3019E+03	.0000E+00
GLoads	34	-.2496E+03	.6964E+03	-.3188E+02	.3553E+02	-.2608E+02	.0000E+00
GLoads	50	.1345E+03	-.1701E+03	-.5482E+01	-.4130E+03	.2849E+02	.0000E+00
GLoads	49	.2284E+03	-.6508E+03	.2680E+02	-.2820E+03	-.2672E+03	.0000E+00
				PLATE 31			
GLoads	35	-.1536E+03	-.1142E+03	.1664E+02	.1844E+03	-.3766E+03	.0000E+00
GLoads	36	-.9841E+02	.3425E+03	-.1679E+02	.7013E+02	.1069E+03	.0000E+00
GLoads	52	.1505E+03	.6314E+02	-.1811E+02	-.1602E+03	.1393E+03	.0000E+00
GLoads	51	.1015E+03	-.2915E+03	.1826E+02	-.9759E+02	-.3466E+03	.0000E+00
				PLATE 32			
GLoads	36	-.1916E+03	.4156E+02	.3186E+02	.8684E+02	-.2019E+03	.0000E+00
GLoads	37	-.3065E+02	.4370E+03	-.2902E+02	.1640E+02	-.2669E+03	.0000E+00
GLoads	53	.1690E+03	-.7928E+02	-.3447E+02	-.2626E+02	-.2455E+03	.0000E+00
GLoads	52	.5325E+02	-.3993E+03	.3163E+02	-.1463E+02	-.1535E+03	.0000E+00
				PLATE 33			
GLoads	37	-.1378E+03	.2332E+03	.4960E+02	-.7273E+02	.1995E+03	.0000E+00
GLoads	38	.2074E+02	.4521E+03	-.5382E+02	-.1618E+03	-.8911E+03	.0000E+00
GLoads	54	.1063E+03	-.2637E+03	-.4591E+02	.4403E+02	-.9023E+03	.0000E+00
GLoads	53	.1079E+02	-.4217E+03	.5014E+02	.9756E+02	.2308E+03	.0000E+00
				PLATE 34			
GLoads	38	-.5146E+02	.4873E+03	.3986E+02	.0000E+00	.8324E+03	.1609E+03


```
============== I M A G E S  3 D ==============
= Copyright (c) 1984   Celestial Software Inc. =
===============================================
```

SOLVE PLATE LOADS/STRESSES Version 2.0 07/01/90

L

Load Case 1:UBC SEISMIC LOAD - NS & EW DIR.

GLoads	Node	Fx	Fy	Fz	Mx	My	Mz
GLoads	39	.4896E+02	.3522E+03	-.1262E+03	-.7120E+02	-.9312E+02	.0000E+00
GLoads	55	.4944E+02	-.4747E+03	-.1901E+02	.1329E+03	-.8186E+02	.0000E+00
GLoads	54	-.4694E+02	-.3647E+03	.1054E+03	.0000E+00	.8678E+03	-.4419E+02
				PLATE 35			
GLoads	39	-.2353E+02	.5434E+03	-.5158E+02	.5194E+02	.1280E+03	.0000E+00
GLoads	40	.2625E+02	.1801E+03	-.1843E+03	.5099E+02	.3150E+03	.0000E+00
GLoads	56	.2368E+02	-.5148E+03	.7482E+02	-.4602E+02	.2615E+03	.0000E+00
GLoads	55	-.2640E+02	-.2087E+03	.1610E+03	.3069E+01	.6944E+02	.0000E+00
				PLATE 36			
GLoads	40	-.9626E+01	.5242E+03	-.1486E+03	.7735E+02	-.2789E+03	.0000E+00
GLoads	41	.8807E+01	.1333E+02	-.1842E+03	.1301E+03	.4029E+03	.0000E+00
GLoads	57	.9393E+01	-.4857E+03	.1487E+03	-.8566E+02	.4296E+03	.0000E+00
GLoads	56	-.8573E+01	-.5189E+02	.1841E+03	-.1398E+03	-.2716E+03	.0000E+00
				PLATE 37			
GLoads	41	.1036E+02	.4179E+03	-.1908E+03	.1381E+03	-.4037E+03	.0000E+00
GLoads	42	-.9097E+01	-.1062E+03	-.1489E+03	.8571E+02	.2632E+03	.0000E+00
GLoads	58	-.9855E+01	-.3759E+03	.1886E+03	-.1222E+03	.2715E+03	.0000E+00
GLoads	57	.8592E+01	.6421E+02	.1511E+03	-.7387E+02	-.4247E+03	.0000E+00
				PLATE 38			
GLoads	42	.2696E+02	.2749E+03	-.2077E+03	.4774E+02	-.3029E+03	.0000E+00
GLoads	43	-.2602E+02	-.1588E+03	-.7696E+02	.2640E+02	-.1536E+03	.0000E+00
GLoads	59	-.2694E+02	-.2453E+03	.2076E+03	-.1856E+02	-.1091E+03	.0000E+00
GLoads	58	.2599E+02	.1292E+03	.7710E+02	-.3477E+02	-.2552E+03	.0000E+00
				PLATE 39			
GLoads	43	.5016E+02	.1024E+03	-.1535E+03	-.7106E+02	.1209E+03	.0000E+00
GLoads	44	-.4721E+02	-.1248E+03	.5983E+01	.0000E+00	-.8672E+03	.1081E+03
GLoads	60	-.4979E+02	-.8460E+02	.1426E+03	.0000E+00	-.8888E+03	-.1047E+03
GLoads	59	.4684E+02	.1070E+03	.4906E+01	.1394E+03	.1315E+03	.0000E+00
				PLATE 40			
GLoads	44	.2022E+02	-.1164E+03	-.5084E+02	-.9296E+02	.1041E+04	.0000E+00
GLoads	45	-.1394E+03	.6332E+02	.5917E+02	-.4920E+02	-.1899E+03	.0000E+00
GLoads	61	-.1057E+02	.1095E+03	.5387E+02	.1667E+03	-.1978E+03	.0000E+00
GLoads	60	.1297E+03	-.5638E+02	-.6220E+02	.1588E+03	.1061E+04	.0000E+00
				PLATE 41			
GLoads	45	-.5925E+02	-.1851E+03	-.3406E+02	.3746E+02	.2649E+03	.0000E+00
GLoads	46	-.1988E+03	.2089E+03	.3387E+02	.9190E+02	.2998E+03	.0000E+00
GLoads	62	.6233E+02	.1655E+03	.3280E+02	-.8558E+02	.2422E+03	.0000E+00
GLoads	61	.1958E+03	-.1893E+03	-.3260E+02	-.4813E+02	.2043E+03	.0000E+00
				PLATE 42			
GLoads	46	-.1239E+03	-.1784E+03	-.1743E+02	.1620E+03	-.2114E+03	.0000E+00
GLoads	47	-.2099E+03	.3332E+03	.1903E+02	.2457E+03	.4715E+03	.0000E+00
GLoads	63	.1227E+03	.1510E+03	.1712E+02	-.1751E+03	.5051E+03	.0000E+00

========== I M A G E S 3 D ==========
= Copyright (c) 1984 Celestial Software Inc. =
==========

SOLVE PLATE LOADS/STRESSES Version 2.0 07/01/90

L

Load Case 1:UBC SEISMIC LOAD - NS & EW DIR.

GLoads	Node	Fx	Fy	Fz	Mx	My	Mz
GLoads	62	.2111E+03	-.3058E+03	-.1873E+02	-.1972E+03	-.2169E+03	.0000E+00
				PLATE 43			
GLoads	47	-.1514E+03	-.1192E+03	-.1317E+01	.3028E+03	-.4209E+03	.0000E+00
GLoads	48	-.2064E+03	.4251E+03	.4565E+01	.2775E+03	.4644E+03	.0000E+00
GLoads	64	.1526E+03	.9398E+02	-.4059E+00	-.3080E+03	.4716E+03	.0000E+00
GLoads	63	.2052E+03	-.3998E+03	-.2842E+01	-.2008E+03	-.4519E+03	.0000E+00
				PLATE 44			
GLoads	48	-.1552E+03	-.2896E+02	.6996E+01	.3029E+03	-.4563E+03	.0000E+00
GLoads	49	-.1840E+03	.4919E+03	-.7218E+01	.2837E+03	.3031E+03	.0000E+00
GLoads	65	.1535E+03	.2326E+00	-.4746E+01	-.3129E+03	.3568E+03	.0000E+00
GLoads	64	.1857E+03	-.4631E+03	.4968E+01	-.2786E+03	-.3851E+03	.0000E+00
				PLATE 45			
GLoads	49	-.1511E+03	.9107E+02	.2263E+02	.3066E+03	-.3191E+03	.0000E+00
GLoads	50	-.1243E+03	.5118E+03	-.1525E+02	.2776E+03	.4288E+01	.0000E+00
GLoads	66	.1428E+03	-.1124E+03	-.2250E+02	-.2199E+03	.2976E+02	.0000E+00
GLoads	65	.1325E+03	-.4905E+03	.1513E+02	-.2021E+03	-.2875E+03	.0000E+00
				PLATE 46			
GLoads	51	-.9881E+02	-.6626E+02	.1709E+02	.1116E+03	-.2990E+03	.0000E+00
GLoads	52	-.5896E+02	.2147E+03	-.1327E+02	.1632E+03	.1320E+03	.0000E+00
GLoads	68	.7809E+02	.3927E+02	-.1199E+02	-.4313E+02	.9403E+02	.0000E+00
GLoads	67	.7968E+02	-.1877E+03	.8179E+01	-.1478E+03	-.2724E+03	.0000E+00
				PLATE 47			
GLoads	52	-.1128E+03	.3636E+02	.3166E+02	.1155E+02	-.1179E+03	.0000E+00
GLoads	53	-.1955E+02	.2821E+03	-.2937E+02	.7372E+02	-.2278E+03	.0000E+00
GLoads	69	.8558E+02	-.6897E+02	-.2786E+02	.4236E+02	-.2682E+03	.0000E+00
GLoads	68	.4682E+02	-.2495E+03	.2557E+02	-.7716E+02	-.1683E+03	.0000E+00
				PLATE 48			
GLoads	53	-.1283E+03	.1337E+03	.4561E+02	-.1450E+03	.2425E+03	.0000E+00
GLoads	54	.3385E+02	.2967E+03	-.5384E+02	-.1239E+03	-.8690E+03	.0000E+00
GLoads	70	.1316E+03	-.1446E+03	-.4084E+02	.6560E+02	-.8562E+03	.0000E+00
GLoads	69	-.3716E+02	-.2858E+03	.4907E+02	.2217E+02	.1887E+03	.0000E+00
				PLATE 49			
GLoads	54	-.5153E+02	.2991E+03	.3676E+02	.0000E+00	.8334E+03	.1150E+03
GLoads	55	.4265E+02	.2233E+03	-.8499E+02	-.1498E+03	-.8494E+02	.0000E+00
GLoads	71	.4748E+02	-.2917E+03	.1120E+02	.6796E+01	-.1112E+03	.0000E+00
GLoads	70	-.3860E+02	-.2307E+03	.3702E+02	.0000E+00	.7598E+03	-.6267E+02
				PLATE 50			
GLoads	55	-.2950E+02	.3637E+03	-.2084E+02	.1384E+02	.9735E+02	.0000E+00
GLoads	56	.2820E+02	.1041E+03	-.1572E+03	.4670E+02	.2842E+03	.0000E+00
GLoads	72	.3173E+02	-.3568E+03	.2694E+02	-.2689E+02	.3601E+03	.0000E+00
GLoads	71	-.3043E+02	-.1109E+03	.1511E+03	-.6225E+02	.1873E+03	.0000E+00
				PLATE 51			
GLoads	56	-.7117E+01	.3661E+03	-.6546E+02	.1391E+03	-.2741E+03	.0000E+00

========== I M A G E S 3 D ==========
= Copyright (c) 1984 Celestial Software Inc. =
==========

SOLVE PLATE LOADS/STRESSES Version 2.0 07/01/90

L

Load Case 1:UBC SEISMIC LOAD - NS & EW DIR.

GLoads	Node	Fx	Fy	Fz	Mx	My	Mz
GLoads	57	.9224E+01	.2431E+02	-.1602E+03	.8554E+02	.4264E+03	.0000E+00
GLoads	73	.8044E+01	-.3445E+03	.6703E+02	-.1283E+03	.4026E+03	.0000E+00
GLoads	72	-.1015E+02	-.4588E+02	.1586E+03	-.5003E+02	-.2872E+03	.0000E+00
				PLATE 52			
GLoads	57	.8979E+01	.3006E+03	-.1035E+03	.7399E+02	-.4313E+03	.0000E+00
GLoads	58	-.1033E+02	-.3250E+02	-.1142E+03	.1135E+03	.2621E+03	.0000E+00
GLoads	74	-.1073E+02	-.2765E+03	.9101E+02	-.7919E+02	.2537E+03	.0000E+00
GLoads	73	.1208E+02	.8385E+01	.1267E+03	-.1380E+03	-.4110E+03	.0000E+00
				PLATE 53			
GLoads	58	.3039E+02	.1828E+03	-.1152E+03	.4345E+02	-.2784E+03	.0000E+00
GLoads	59	-.2837E+02	-.6282E+02	-.3622E+02	.4072E+02	-.1373E+03	.0000E+00
GLoads	75	-.3404E+02	-.1522E+03	.8886E+02	-.1445E+02	-.2067E+03	.0000E+00
GLoads	74	.3202E+02	.3220E+02	.6261E+02	-.2532E+02	-.3449E+03	.0000E+00
				PLATE 54			
GLoads	59	.4465E+02	.1046E+03	-.1401E+03	-.1616E+03	.1149E+03	.0000E+00
GLoads	60	-.5941E+02	-.2227E+02	.4511E+02	.0000E+00	-.8924E+03	.1973E+03
GLoads	76	-.4064E+02	-.1125E+03	.1524E+03	.0000E+00	-.8693E+03	-.5184E+01
GLoads	75	.5541E+02	.3015E+02	-.5744E+02	.2894E+02	.9594E+02	.0000E+00
				PLATE 55			
GLoads	60	.3032E+02	-.2886E+02	-.7369E+02	-.2668E+03	.1013E+04	.0000E+00
GLoads	61	-.1194E+03	.9025E+02	.4705E+02	-.2335E+03	-.2009E+03	.0000E+00
GLoads	77	-.1978E+02	.3894E+02	.6169E+02	-.4506E+02	-.1497E+03	.0000E+00
GLoads	76	.1088E+03	-.1003E+03	-.3504E+02	-.4082E+02	.9870E+03	.0000E+00
				PLATE 56			
GLoads	61	-.3039E+02	-.1049E+03	-.3291E+02	.1149E+03	.1943E+03	.0000E+00
GLoads	62	-.1463E+03	.1629E+03	.3763E+02	.4108E+02	.2321E+03	.0000E+00
GLoads	78	.4353E+02	.9340E+02	.3663E+02	-.8167E+02	.3763E+03	.0000E+00
GLoads	77	.1332E+03	-.1515E+03	-.4135E+02	.2951E+02	.3236E+03	.0000E+00
				PLATE 57			
GLoads	62	-.9175E+02	-.1170E+03	-.1629E+02	.2417E+03	-.2574E+03	.0000E+00
GLoads	63	-.1498E+03	.2512E+03	.1812E+02	.9302E+02	.4562E+03	.0000E+00
GLoads	79	.1037E+03	.9921E+02	.1652E+02	-.2491E+03	.5187E+03	.0000E+00
GLoads	78	.1379E+03	-.2334E+03	-.1835E+02	-.4544E+02	-.1921E+03	.0000E+00
				PLATE 58			
GLoads	63	-.1427E+03	-.9680E+02	.3015E+01	.2829E+03	-.5094E+03	.0000E+00
GLoads	64	-.1373E+03	.3284E+03	.5750E+01	.2117E+03	.3863E+03	.0000E+00
GLoads	80	.1543E+03	.7778E+02	-.6080E+01	-.1869E+03	.5146E+03	.0000E+00
GLoads	79	.1257E+03	-.3094E+03	-.2685E+01	-.1148E+03	-.3965E+03	.0000E+00
				PLATE 59			
GLoads	64	-.1656E+03	-.5366E+02	.2510E+02	.3750E+03	-.4728E+03	.0000E+00
GLoads	65	-.1160E+03	.3654E+03	-.5201E+01	.2348E+03	.1632E+03	.0000E+00
GLoads	81	.1753E+03	.4305E+02	-.3653E+02	-.1870E+03	.1504E+03	.0000E+00

KCA 4PRINT

KAISER ENGINEERS HANFORD S/N:801854 02/22/95
PAGE 73 Run ID=MN61973 08:50:14

========== I M A G E S 3 D ==========
= Copyright (c) 1984 Celestial Software Inc. =
==========

SOLVE PLATE LOADS/STRESSES Version 2.0 07/01/90

L

Load Case 1:UBC SEISMIC LOAD - NS & EW DIR.

GLoads	Node	Fx	Fy	Fz	Mx	My	Mz
GLoads	80	.1063E+03	-.3548E+03	.1664E+02	.1497E+02	-.4738E+03	.0000E+00
				PLATE 60			
GLoads	65	-.1347E+03	.3041E+02	.3023E+02	.2801E+03	-.2325E+03	.0000E+00
GLoads	66	-.8696E+02	.3683E+03	-.8331E+01	.2884E+03	-.1067E+03	.0000E+00
GLoads	82	.1173E+03	-.4682E+02	-.3673E+02	-.4525E+02	-.1920E+03	.0000E+00
GLoads	81	.1043E+03	-.3519E+03	.1483E+02	-.4146E+02	-.1523E+03	.0000E+00
				PLATE 61			
GLoads	67	-.3048E+02	-.8538E+02	.2280E+02	.1509E+03	-.1010E+03	.0000E+00
GLoads	68	-.7294E+02	.1329E+03	-.5066E+00	.2697E+03	.1058E+03	.0000E+00
GLoads	84	.5673E+01	.7521E+02	-.1850E+02	.1686E+03	-.1101E+03	.0000E+00
GLoads	83	.9774E+02	-.1227E+03	-.3795E+01	.2380E+02	-.1544E+03	.0000E+00
				PLATE 62			
GLoads	68	-.1608E+02	-.1839E+02	.2283E+02	-.1494E+03	-.3151E+02	.0000E+00
GLoads	69	-.5142E+02	.1250E+03	-.2894E+02	.1042E+03	-.1548E+03	.0000E+00
GLoads	85	-.5566E+02	.1083E+02	-.1462E+02	.8671E+02	-.2624E+03	.0000E+00
GLoads	84	.1232E+03	-.1174E+03	.2074E+02	-.2096E+03	-.1468E+03	.0000E+00
				PLATE 63			
GLoads	69	.3890E+02	.1340E+03	.4363E+02	-.1687E+03	.2343E+03	.0000E+00
GLoads	70	-.4070E+01	.8861E+02	-.4400E+02	.4562E+02	-.7748E+03	.0000E+00
GLoads	86	-.2327E+03	-.1587E+03	-.3893E+02	.1812E+03	-.6674E+03	.0000E+00
GLoads	85	.1979E+03	-.6394E+02	.3930E+02	-.6840E+02	.7452E+02	.0000E+00
				PLATE 64			
GLoads	70	-.4133E+02	.2205E+03	.9467E+02	.0000E+00	.8141E+03	.9675E+01
GLoads	71	.4919E+02	.5368E+02	-.1978E+03	-.3980E+02	-.1299E+03	.0000E+00
GLoads	87	.4363E+02	-.2366E+03	-.2186E+03	.1232E+03	-.2588E+02	.0000E+00
GLoads	86	-.5148E+02	-.3761E+02	.3217E+03	.0000E+00	.7803E+03	-.1422E+03
				PLATE 65			
GLoads	71	-.2553E+02	.2404E+03	.7612E+02	.9526E+02	.5384E+02	.0000E+00
GLoads	72	.2439E+02	.6448E+02	-.1667E+03	-.4521E+02	.2867E+03	.0000E+00
GLoads	88	.2828E+01	-.2252E+03	-.8417E+02	-.1411E+03	.1800E+03	.0000E+00
GLoads	87	-.1688E+01	-.7966E+02	.1748E+03	.5968E+02	-.9871E+02	.0000E+00
				PLATE 66			
GLoads	72	-.5254E+01	.2297E+03	.2188E+02	.1221E+03	-.3597E+03	.0000E+00
GLoads	73	.9155E+01	.9123E+01	-.1390E+03	.1173E+03	.3888E+03	.0000E+00
GLoads	89	.1294E+01	-.2169E+03	-.6697E+01	-.7531E+02	.3744E+03	.0000E+00
GLoads	88	-.5195E+01	-.2189E+02	.1238E+03	-.5688E+02	-.2416E+03	.0000E+00
				PLATE 67			
GLoads	73	.1143E+02	.2185E+03	-.1404E+02	.1490E+03	-.3804E+03	.0000E+00
GLoads	74	-.2626E+01	-.2533E+02	-.1206E+03	.1560E+03	.3283E+03	.0000E+00
GLoads	90	-.3658E+01	-.2136E+03	.1866E+02	-.2415E+02	.2710E+03	.0000E+00
GLoads	89	-.5145E+01	.2042E+02	.1160E+03	-.3877E+02	-.3162E+03	.0000E+00
				PLATE 68			
GLoads	74	.2205E+02	.1611E+03	.7698E+01	-.5151E+02	-.2370E+03	.0000E+00

KAISER ENGINEERS HANFORD S/N:801854 02/22/95
PAGE 74 Run ID=MN61973 08:50:15

========== I M A G E S 3 D ==========
= Copyright (c) 1984 Celestial Software Inc. =
==========

SOLVE PLATE LOADS/STRESSES Version 2.0 07/01/90

L

Load Case 1:UBC SEISMIC LOAD - NS & EW DIR.

GLoads	Node	Fx	Fy	Fz	Mx	My	Mz
GLoads	75	-.2882E+02	.2048E+02	-.8891E+02	.2678E+02	-.7095E+02	.0000E+00
GLoads	91	.5704E+01	-.1646E+03	-.5582E+02	-.1979E+02	.5270E+02	.0000E+00
GLoads	90	.1067E+01	-.1701E+02	.1370E+03	-.1417E+03	-.1030E+03	.0000E+00
				PLATE 69			
GLoads	75	.4816E+02	-.7029E+01	.9820E+02	-.4127E+02	.1817E+03	.0000E+00
GLoads	76	-.3014E+02	.7918E+02	-.3334E+02	.0000E+00	-.8436E+03	-.1355E+03
GLoads	92	-.4154E+02	.3589E+02	-.3078E+03	.0000E+00	-.6524E+03	-.2949E+03
GLoads	91	.2351E+02	-.1081E+03	.2429E+03	.1066E+03	.2034E+03	.0000E+00
				PLATE 70			
GLoads	76	.1085E+02	-.5327E+01	-.3339E+02	.1819E+03	.9118E+03	.0000E+00
GLoads	77	-.4260E+02	.5315E+02	.5239E+02	-.9881E+02	-.2779E+03	.0000E+00
GLoads	93	.2592E+02	.4410E+01	.3068E+02	.7483E+02	-.1790E+03	.0000E+00
GLoads	92	.5820E+01	-.5223E+02	-.4967E+02	.3644E+03	.8049E+03	.0000E+00
				PLATE 71			
GLoads	77	-.3098E+02	-.4686E+02	-.3288E+02	.1144E+03	.1040E+03	.0000E+00
GLoads	78	-.5269E+02	.1106E+03	.2751E+02	-.1347E+03	.1866E+03	.0000E+00
GLoads	94	.6130E+02	.4106E+02	.2430E+01	-.2111E+03	.1447E+03	.0000E+00
GLoads	93	.2237E+02	-.1048E+03	.2947E+01	.8357E+02	.1871E+02	.0000E+00
				PLATE 72			
GLoads	78	-.8890E+02	-.7689E+02	-.5956E+01	.2618E+03	-.3708E+03	.0000E+00
GLoads	79	-.4576E+02	.1763E+03	.1649E+02	.6298E+02	.3680E+03	.0000E+00
GLoads	95	.1075E+03	.6788E+02	-.3801E+01	-.1176E+03	.4165E+03	.0000E+00
GLoads	94	.2714E+02	-.1673E+03	-.6736E+01	.8258E+02	-.2211E+03	.0000E+00
				PLATE 73			
GLoads	79	-.1438E+03	-.7236E+02	.9505E+01	.3009E+03	-.4902E+03	.0000E+00
GLoads	80	-.1418E+02	.2283E+03	.9248E+01	.1423E+03	.4314E+03	.0000E+00
GLoads	96	.1556E+03	.5813E+02	-.1323E+02	-.2642E+02	.3820E+03	.0000E+00
GLoads	95	.2332E+01	-.2140E+03	-.5525E+01	.9890E+02	-.3836E+03	.0000E+00
				PLATE 74			
GLoads	80	-.2066E+03	-.5749E+02	.2003E+02	.2962E+02	-.4722E+03	.0000E+00
GLoads	81	.2902E+02	.2796E+03	-.3619E+02	-.2260E+03	.1005E+03	.0000E+00
GLoads	97	.2449E+03	.4233E+02	.1943E+02	-.1780E+03	.3456E+03	.0000E+00
GLoads	96	-.6729E+02	-.2645E+03	-.3266E+01	-.7003E+02	-.2282E+03	.0000E+00
				PLATE 75			
GLoads	81	-.2688E+03	-.7698E+02	.9773E+02	.4545E+03	-.9861E+02	.0000E+00
GLoads	82	.5739E+02	.3022E+03	.5728E+02	.1372E+04	-.7084E+03	.0000E+00
GLoads	98	.3982E+03	.8111E+02	-.1845E+03	.1703E+04	-.9188E+03	.0000E+00
GLoads	97	-.1868E+03	-.3063E+03	.2947E+02	.7338E+03	-.2034E+03	.0000E+00
				PLATE 76			
GLoads	83	-.7677E+01	-.6441E+02	.1677E+02	.1570E+03	.2528E+03	.0000E+00
GLoads	84	-.6767E+02	.3649E+02	.2857E+02	.1164E+03	.1021E+03	.0000E+00
GLoads	100	.6528E+01	.5447E+02	.3248E+02	.2035E+03	.1430E+03	.0000E+00

========== I M A G E S 3 D ==========
= Copyright (c) 1984 Celestial Software Inc. =
==========

SOLVE PLATE LOADS/STRESSES Version 2.0 07/01/90

L

Load Case 1:UBC SEISMIC LOAD - NS & EW DIR.

GLoads	Node	Fx	Fy	Fz	Mx	My	Mz
GLoads	99	.6881E+02	-.2655E+02	-.7781E+02	.2712E+03	.3364E+03	.0000E+00
			PLATE 77				
GLoads	84	-.2927E+02	-.7935E+02	.1100E+01	-.7548E+02	.1548E+03	.0000E+00
GLoads	85	-.9295E+02	.6674E+02	.2599E+02	.2735E+03	.5173E+02	.0000E+00
GLoads	101	.7252E+02	.8082E+02	-.6836E+01	.2789E+03	-.3542E+02	.0000E+00
GLoads	100	.4969E+02	-.6821E+02	-.2026E+02	-.2986E+02	.9072E+02	.0000E+00
			PLATE 78				
GLoads	85	-.1735E+02	-.9871E+02	-.1876E+02	-.2918E+03	.1361E+03	.0000E+00
GLoads	86	-.1573E+03	.1300E+03	-.9752E+02	-.6819E+03	-.1073E+03	.0000E+00
GLoads	102	.1582E+03	.8085E+02	.9387E+02	-.6664E+03	-.1253E+03	.0000E+00
GLoads	101	.1644E+02	-.1121E+03	.2242E+02	-.2787E+03	.4648E+02	.0000E+00
			PLATE 79				
GLoads	86	-.1667E+02	-.3664E+02	.1997E+03	.0000E+00	.4296E+03	-.1410E+03
GLoads	87	.2698E+02	.1753E+03	-.2007E+02	-.1169E+03	.1227E+03	.0000E+00
GLoads	103	.5328E+02	.1587E+02	-.5143E+02	.0000E+00	.2714E+03	.6417E+02
GLoads	102	-.6360E+02	-.1546E+03	-.1282E+03	.0000E+00	.4205E+03	-.2102E+03
			PLATE 80				
GLoads	87	-.3274E+02	.4440E+02	.1002E+03	-.6603E+02	.1916E+01	.0000E+00
GLoads	88	.2278E+02	.9342E+02	-.3647E+02	.3034E+01	.1515E+03	.0000E+00
GLoads	104	.4089E+02	-.2562E+02	-.5929E+02	.0000E+00	.4706E+03	-.2607E+01
GLoads	103	-.3093E+02	-.1122E+03	-.4403E+01	.0000E+00	.3628E+03	.1039E+03
			PLATE 81				
GLoads	88	.1578E+02	.5716E+02	.3302E+02	.1949E+03	-.8988E+02	.0000E+00
GLoads	89	.1842E+02	.1941E+02	-.6677E+02	.7223E+02	.1353E+03	.0000E+00
GLoads	105	-.5752E+01	-.5534E+02	-.2697E+02	.0000E+00	.1674E+03	-.9693E+02
GLoads	104	-.2845E+02	-.2123E+02	.6072E+02	.0000E+00	-.1647E+02	-.2002E+03
			PLATE 82				
GLoads	89	.2162E+02	.8057E+02	-.6332E+01	.4186E+02	-.1935E+03	.0000E+00
GLoads	90	-.5969E+00	-.5113E+01	-.7194E+02	.1097E+03	.1325E+02	.0000E+00
GLoads	106	-.4099E+02	-.7820E+02	.1875E+02	.0000E+00	-.1534E+03	-.1221E+03
GLoads	105	.1997E+02	.2751E+01	.5951E+02	.0000E+00	-.3109E+03	-.7314E+02
			PLATE 83				
GLoads	90	.3938E+02	.1392E+03	-.4756E+02	.5614E+02	-.1812E+03	.0000E+00
GLoads	91	-.1478E+02	-.1369E+02	-.1089E+03	.1379E+03	-.1353E+03	.0000E+00
GLoads	107	-.7846E+02	-.1529E+03	.1126E+03	.0000E+00	-.5582E+03	-.1275E+03
GLoads	106	.5386E+02	.2740E+02	.4393E+02	.0000E+00	-.5704E+03	-.8433E+02
			PLATE 84				
GLoads	91	.2176E+02	.1898E+03	-.4202E+02	-.2247E+03	-.1207E+03	.0000E+00
GLoads	92	-.9019E+02	-.1158E+03	-.2134E+03	.0000E+00	-.4873E+03	.4155E+03
GLoads	108	-.2916E+02	-.1561E+03	.2470E+03	.0000E+00	-.7601E+03	.3370E+03
GLoads	107	.9759E+02	.8210E+02	.8400E+01	.0000E+00	-.4818E+03	.1519E+03
			PLATE 85				
GLoads	92	-.3554E+02	-.1348E+02	-.1403E+02	.2406E+03	.4806E+03	.0000E+00

========== I M A G E S 3 D ==========
= Copyright (c) 1984 Celestial Software Inc. =
==========

SOLVE PLATE LOADS/STRESSES Version 2.0 07/01/90

L

Load Case 1:UBC SEISMIC LOAD - NS & EW DIR.

GLoads	Node	Fx	Fy	Fz	Mx	My	Mz
GLoads	93	.3328E+02	.3663E+01	.4042E+02	-.1265E+03	.7157E+02	.0000E+00
GLoads	109	.3244E+02	-.1204E+01	.7459E+02	-.2640E+02	.4516E+03	.0000E+00
GLoads	108	-.3018E+02	.1102E+02	-.1010E+03	.3477E+03	.7405E+03	.0000E+00
			PLATE 86				
GLoads	93	-.4616E+02	.2343E+01	-.3863E+02	-.3190E+02	.8873E+02	.0000E+00
GLoads	94	.1492E+02	.3747E+02	.3279E+02	-.5892E+02	.1351E+03	.0000E+00
GLoads	110	.4291E+02	-.3478E+01	.6037E+02	.9933E+01	.6024E+03	.0000E+00
GLoads	109	-.1167E+02	-.3633E+02	-.5454E+02	-.1545E+02	.5868E+03	.0000E+00
			PLATE 87				
GLoads	94	-.6795E+02	-.5685E+01	.6927E+01	.1874E+03	-.5864E+02	.0000E+00
GLoads	95	.1730E+02	.5330E+02	.2557E+02	-.1631E+02	.1587E+03	.0000E+00
GLoads	111	.6683E+02	.1801E+01	.1582E+02	.1054E+03	.3451E+03	.0000E+00
GLoads	110	-.1619E+02	-.4941E+02	-.4832E+02	.2598E+03	.1826E+03	.0000E+00
			PLATE 88				
GLoads	95	-.9174E+02	-.1578E+01	.1916E+02	.3503E+02	-.1916E+03	.0000E+00
GLoads	96	.4165E+02	.5532E+02	.1157E+02	.6249E+02	.5359E+02	.0000E+00
GLoads	112	.8867E+02	-.8277E+00	-.2845E+02	.2280E+03	.3290E+02	.0000E+00
GLoads	111	-.3857E+02	-.5292E+02	-.2292E+01	.1817E+03	-.1508E+03	.0000E+00
			PLATE 89				
GLoads	96	-.9456E+02	.5659E+02	.4033E+02	.3396E+02	-.2073E+03	.0000E+00
GLoads	97	.1067E+03	.6832E+02	-.3401E+01	.1006E+03	.1121E+02	.0000E+00
GLoads	113	.6272E+02	-.8150E+02	-.7527E+02	.2611E+03	-.4455E+03	.0000E+00
GLoads	112	-.7483E+02	-.4341E+02	.3834E+02	.2136E+03	-.5515E+03	.0000E+00
			PLATE 90				
GLoads	97	-.1293E+03	.1012E+03	-.1009E+02	-.6564E+03	-.1533E+03	.0000E+00
GLoads	98	.1971E+03	-.1609E+01	-.1770E+03	-.1162E+04	-.5292E+03	.0000E+00
GLoads	114	.1886E+02	-.7213E+02	.8611E+02	-.8885E+03	-.4547E+03	.0000E+00
GLoads	113	-.8664E+02	-.2746E+02	.1010E+03	-.3801E+03	-.2416E+03	.0000E+00
			PLATE 91				
GLoads	122	-.2513E+03	-.6323E+03	-.6732E+02	-.5672E+03	-.1189E+03	.0000E+00
GLoads	2	-.1179E+03	.1669E+02	-.4577E+02	-.5375E+03	-.5515E+02	.0000E+00
GLoads	19	.2164E+03	.3894E+03	.4648E+02	-.6713E+03	.1418E+03	.0000E+00
GLoads	124	.1528E+03	.2262E+03	.6661E+02	-.7120E+03	.4633E+02	.0000E+00
			PLATE 92				
GLoads	124	-.1259E+03	-.4073E+03	-.3671E+02	-.1491E+03	-.1685E+03	.0000E+00
GLoads	19	-.1703E+03	.6161E+02	-.2193E+02	-.1556E+03	.2343E+02	.0000E+00
GLoads	35	.1513E+03	.2642E+03	.2068E+02	-.4786E+03	.1669E+03	.0000E+00
GLoads	126	.1449E+03	.8146E+02	.3796E+02	-.5070E+03	-.4688E+02	.0000E+00
			PLATE 93				
GLoads	126	-.1120E+03	-.2347E+03	-.8166E+01	.1651E+03	-.1630E+03	.0000E+00
GLoads	35	-.1084E+03	.9479E+02	-.3539E+01	.1192E+03	.8499E+02	.0000E+00
GLoads	51	.1191E+03	.1476E+03	.4495E+01	-.2682E+03	.1706E+03	.0000E+00

```
============== I M A G E S  3 D ==============
= Copyright (c) 1984   Celestial Software Inc. =
===============================================

SOLVE PLATE LOADS/STRESSES   Version 2.0  07/01/90

L

Load Case  1:UBC SEISMIC LOAD - NS & EW DIR.

GLoads Node     Fx          Fy          Fz          Mx          My          Mz
------ ---- ---------- ---------- ---------- ---------- ---------- ----------
GLoads  128  .1012E+03 -.7753E+01  .7210E+01 -.2737E+03 -.7355E+02  .0000E+00
                          ***PLATE   94***
GLoads  128 -.7064E+02 -.1180E+03  .2237E+02  .4131E+03 -.1292E+03  .0000E+00
GLoads   51 -.7402E+02  .8655E+02  .7867E+01  .2972E+03  .7877E+02  .0000E+00
GLoads   67  .7072E+02  .7257E+02 -.1892E+02 -.6027E+02 -.1326E+01  .0000E+00
GLoads  130  .7394E+02 -.4111E+02 -.1132E+02  .1515E+02 -.1692E+03  .0000E+00
                          ***PLATE   95***
GLoads  130 -.3673E+02 -.7804E+02  .4653E+02  .7063E+03  .2266E+02  .0000E+00
GLoads   67 -.6854E+02  .7429E+02  .4052E+02  .6733E+03  .5620E+02  .0000E+00
GLoads   83  .2846E+02  .7047E+02 -.2071E+02  .5062E+03  .1235E+03  .0000E+00
GLoads  132  .7682E+02 -.6671E+02 -.6635E+02  .5082E+03  .1939E+03  .0000E+00
                          ***PLATE   96***
GLoads  132 -.4610E+02 -.3634E+02  .1000E+03  .4872E+03 -.1374E+03  .0000E+00
GLoads   83 -.4588E+02  .1051E+02  .5010E+02  .6182E+03 -.3013E+03  .0000E+00
GLoads   99  .6295E+02  .6538E+02 -.1567E+03  .7732E+03 -.9319E+03  .0000E+00
GLoads  134  .2903E+02 -.3955E+02  .6580E+01  .5984E+03 -.7612E+03  .0000E+00
                          ***PLATE   97***
GLoads   17 -.2450E+02  .6026E+03 -.7013E+02 -.6476E+03 -.1007E+03  .0000E+00
GLoads  123 -.4734E+03  .1327E+04 -.8368E+02 -.8411E+03 -.5672E+02  .0000E+00
GLoads  125  .1184E+03 -.7791E+03  .7443E+02 -.1037E+04 -.1238E+02  .0000E+00
GLoads   34  .3795E+03 -.1150E+04  .7938E+02 -.8577E+03 -.1516E+02  .0000E+00
                          ***PLATE   98***
GLoads   34 -.1400E+03  .5344E+03 -.2215E+02 -.5733E+02 -.1489E+03  .0000E+00
GLoads  125 -.9561E+02  .8436E+03 -.4507E+02 -.1941E+03 -.9105E+02  .0000E+00
GLoads  127  .1079E+03 -.5843E+03  .2745E+02 -.6674E+03 -.4149E+02  .0000E+00
GLoads   50  .1277E+03 -.7936E+03  .3977E+02 -.5601E+03 -.7097E+02  .0000E+00
                          ***PLATE   99***
GLoads   50 -.8628E+02  .3824E+03  .2875E+02  .4103E+03 -.1770E+03  .0000E+00
GLoads  127 -.7400E+02  .5863E+03  .1015E+01  .4464E+03 -.1647E+03  .0000E+00
GLoads  129  .6687E+02 -.4099E+03 -.4278E+02 -.6462E+02 -.2540E+03  .0000E+00
GLoads   66  .9341E+02 -.5587E+03  .1301E+02 -.1372E+03 -.2395E+03  .0000E+00
                          ***PLATE  100***
GLoads   66 -.1076E+03  .2221E+03  .6652E+02  .7035E+03 -.3502E+02  .0000E+00
GLoads  129 -.3577E+02  .3925E+03  .6984E+02  .1108E+04 -.1576E+03  .0000E+00
GLoads  131  .1178E+03 -.2348E+03 -.7892E+02  .8396E+03 -.7481E+02  .0000E+00
GLoads   82  .2558E+02 -.3798E+03 -.5744E+02  .3490E+03  .8579E+02  .0000E+00
                          ***PLATE  101***
GLoads   82 -.1188E+03  .1552E+02  .8526E+02  .1825E+04  .8677E+03  .0000E+00
GLoads  131 -.8062E+02  .2430E+03  .1215E+03  .7399E+03  .4114E+03  .0000E+00
GLoads  133 -.5906E+01  .3128E+02  .3438E+02  .9452E+03  .7017E+03  .0000E+00
GLoads   98  .2053E+03 -.2898E+03 -.2411E+03  .2176E+04  .1136E+04  .0000E+00
                          ***PLATE  102***
GLoads   98  .9540E+02  .6209E+02 -.1804E+03 -.1337E+04  .3590E+03  .0000E+00
```



```
============== I M A G E S  3 D ==============
= Copyright (c) 1984   Celestial Software Inc. =
===============================================

SOLVE PLATE LOADS/STRESSES   Version 2.0  07/01/90

L

Load Case  1:UBC SEISMIC LOAD - NS & EW DIR.

GLoads Node     Fx          Fy          Fz          Mx          My          Mz
------ ---- ---------- ---------- ---------- ---------- ---------- ----------
GLoads  133  .2925E+02 -.7655E+02 -.9062E+01 -.5060E+03  .1291E+03  .0000E+00
GLoads  135 -.2404E+02 -.2629E+02  .2529E+02 -.2475E+03 -.1686E+03  .0000E+00
GLoads  114 -.1006E+03  .4075E+02  .1642E+03 -.1036E+04  .5211E+01  .0000E+00
```

========== I M A G E S 3 D ==========
= Copyright (c) 1984 Celestial Software Inc. =
==========

SOLVE PLATE LOADS/STRESSES Version 2.0 07/01/90

L

Load Case 1:UBC SEISMIC LOAD - NS & EW DIR.

MAXIMUM STRESS SUMMARY FOR PLATES
WITHIN SPECIFIED RANGE 1- 102

Maximum (absolute) Stress = .3463E+03 at Plate 40

Plate	Sigma X	Sigma Y	Tau XY	Von Mises
40	-.3463E+03	-.8900E+02	.9047E+00	.3115E+03

========== I M A G E S 3 D ==========
= Copyright (c) 1984 Celestial Software Inc. =
==========

SOLVE REACTIONS Version 2.0 07/01/90

L

Load Case 1:UBC SEISMIC LOAD - NS & EW DIR.

REACTIONS

Node	Fx	Fy	Fz	Mx	My	Mz
1	-.2192E+02	.3164E+03	-.1370E+03	.0000E+00	.0000E+00	.0000E+00
2	-.2445E+03	-.1501E+02	-.8265E+02	.0000E+00	-.1001E+04	.9723E+02
3	-.2545E+03	.6056E+03	-.2066E+02	.0000E+00	-.1965E+03	.0000E+00
4	-.2309E+03	.1233E+04	-.2717E+01	.0000E+00	-.1723E+03	.0000E+00
5	-.4472E+03	.2916E+04	-.5092E+03	-.4289E+03	-.1467E+03	.4038E+03
6	-.5173E+01	.1510E+04	-.3622E+03	.0000E+00	.1299E+03	.0000E+00
7	-.3201E+02	.9816E+03	-.3895E+03	.0000E+00	.1170E+03	.0000E+00
8	-.3377E+02	.6417E+03	-.3631E+03	.0000E+00	-.2667E+01	.0000E+00
9	-.3089E+02	.3038E+03	-.3361E+03	.0000E+00	-.1231E+03	.0000E+00
10	-.4831E+01	-.1728E+03	-.2648E+03	.0000E+00	-.1290E+03	.0000E+00
11	-.2653E+03	-.1241E+04	-.2522E+03	-.3918E+03	.6500E+03	.6938E+03
12	-.2354E+03	-.2442E+03	-.1463E+01	.0000E+00	.2569E+03	.0000E+00
13	-.3081E+03	.1569E+03	-.3334E+02	.0000E+00	.2904E+03	.0000E+00
14	-.3359E+03	.4046E+03	-.4115E+02	.0000E+00	.1914E+03	.0000E+00
15	-.3528E+03	.6217E+03	-.4799E+02	.0000E+00	.5407E+02	.0000E+00
16	-.3670E+03	.8432E+03	-.3759E+02	.0000E+00	-.5095E+02	.0000E+00
17	-.4229E+03	.1673E+04	-.1374E+03	.0000E+00	-.6221E+03	.1049E+03
18	-.1952E+02	.2173E+03	.3425E+02	.0000E+00	.0000E+00	.0000E+00
115	-.6774E+04	.0000E+00	-.7972E+04	.0000E+00	.0000E+00	.0000E+00
116	-.1827E+04	.7957E+04	-.7833E+03	.0000E+00	.0000E+00	.0000E+00
117	-.7850E+03	.7957E+04	-.1829E+04	.0000E+00	.0000E+00	.0000E+00
118	-.3619E+04	.1041E+05	-.7862E+03	.0000E+00	.0000E+00	.0000E+00
119	-.7821E+03	.1041E+05	-.3620E+04	.0000E+00	.0000E+00	.0000E+00
122	-.2714E+03	-.8265E+03	-.8764E+02	.0000E+00	-.7437E+03	.1109E+03
123	-.4963E+03	.1793E+04	-.1040E+03	.0000E+00	-.3245E+03	.1384E+03

```
              ============== I M A G E S  3 D ==============
              = Copyright (c) 1984   Celestial Software Inc. =
              ================================================

          SOLVE BEAM LOADS/STRESSES    Version 2.0  07/01/90

     L

Load Case  2:GRAVITY LOAD

                         BEAM LOADS AND/OR STRESSES

GLoads Node     Fx          Fy          Fz          Mx          My          Mz
LLoads Node    Axial       Y-Shear     Z-Shear     Torsion     Y-Bending   Z-Bending
Stress Node    Axial       Y-Shear     Z-Shear     Torsion     Y-Bending   Z-Bending
Stress Node    Maximum     Minimum     Cmb. Shear
------ ---- ---------- ---------- ---------- ---------- ---------- ----------
                                   ***BEAM  NO.    1***
GLoads   1  .1036E+00  .1225E+03 -.2811E+02  .1137E-12 -.1779E-14 -.4814E-16
GLoads  99 -.1036E+00  .2281E+02  .2811E+02 -.9695E+03 -.5695E+01 -.1367E+02
LLoads   1  .1239E+03 -.2116E+02 -.1036E+00 -.1624E-14  .7287E-15 -.1137E-12
LLoads  99  .1024E+02 -.3472E+02  .1036E+00  .1367E-14  .1481E+02  .9695E+03
                                   ***BEAM  NO.    2***
GLoads  18 -.2438E+00  .1062E+03  .1867E+02 -.1137E-12 -.3469E-14  .3140E-15
GLoads 114  .2438E+00  .3583E+02 -.1867E+02  .8466E+03 -.1122E+02  .3218E+02
LLoads  18  .1064E+03 -.1731E+02 -.2438E+00 -.3172E-14  .1438E-14 -.1137E-12
LLoads 114  .2769E+02 -.2942E+02  .2438E+00  .5621E-15  .3408E+02  .8466E+03
                                   ***BEAM  NO.    3***
GLoads  99  .1182E+02  .5256E+02 -.2652E+02  .8460E+03 -.7417E+01  .3663E+03
GLoads 108 -.1182E+02  .5070E+02  .2652E+02 -.7597E+03 -.4750E+01 -.3283E+03
LLoads  99  .2904E+02 -.5256E+02 -.1197E+00  .6049E+01  .7417E+01 -.9219E+03
LLoads 108 -.2904E+02 -.5070E+02  .1197E+00 -.6049E+01  .4750E+01  .8276E+03
                                   ***BEAM  NO.    4***
GLoads 114 -.4464E+02  .6587E+02  .4568E+02 -.9904E+03  .5060E+01 -.9701E+03
GLoads 102  .4464E+02  .6632E+02 -.4568E+02  .1011E+04  .5164E+00  .9908E+03
LLoads 114  .6387E+02 -.6587E+02  .4286E-01 -.7628E+00 -.5060E+01 -.1386E+04
LLoads 102 -.6387E+02 -.6632E+02 -.4286E-01  .7628E+00 -.5164E+00  .1416E+04
                                   ***BEAM  NO.    5***
GLoads  98  .2216E+02  .4801E+02 -.2532E+02 -.5326E+03  .1020E+01 -.4752E+03
GLoads 115 -.2216E+02  .4918E+02  .2532E+02  .5747E+03 -.2753E+00  .5120E+03
LLoads  98 -.3365E+02 -.4801E+02  .7782E-02 -.6864E+01 -.1020E+01 -.7137E+03
LLoads 115  .3365E+02 -.4918E+02 -.7782E-02  .6864E+01  .2753E+00  .7697E+03
                                   ***BEAM  NO.    6***
GLoads  92 -.1012E+00  .4186E+02 -.4776E+00 -.5633E+03  .3580E+01  .2178E+03
GLoads 115  .1012E+00  .3662E+02  .4776E+00  .3746E+03  .2511E+01 -.1444E+03
LLoads  92 -.4818E+00 -.4186E+02  .7884E-01 -.1209E+01 -.3580E+01 -.6039E+03
LLoads 115  .4818E+00 -.3662E+02 -.7884E-01  .1209E+01 -.2511E+01  .4015E+03
                                   ***BEAM  NO.    7***
GLoads  86 -.2819E+02  .4670E+02  .2172E+02  .3761E+03 -.9338E+01  .4952E+03
GLoads 115  .2819E+02 -.1114E+02 -.2172E+02  .2311E+03 -.6622E+01  .3145E+03
LLoads  86 -.3559E+02 -.4670E+02 -.4560E+00  .3794E+01  .9338E+01 -.6218E+03
LLoads 115  .3559E+02  .1114E+02  .4560E+00 -.3794E+01  .6622E+01 -.3903E+03
                                   ***BEAM  NO.    8***
GLoads 134  .9554E+00  .3726E+01 -.7167E-01 -.9602E+00 -.6593E+01  .2487E-12
```



```
              ============== I M A G E S  3 D ==============
              = Copyright (c) 1984   Celestial Software Inc. =
              ================================================

          SOLVE BEAM LOADS/STRESSES    Version 2.0  07/01/90

     L

Load Case  2:GRAVITY LOAD

GLoads Node     Fx          Fy          Fz          Mx          My          Mz
LLoads Node    Axial       Y-Shear     Z-Shear     Torsion     Y-Bending   Z-Bending
Stress Node    Axial       Y-Shear     Z-Shear     Torsion     Y-Bending   Z-Bending
Stress Node    Maximum     Minimum     Cmb. Shear
------ ---- ---------- ---------- ---------- ---------- ---------- ----------
GLoads  99 -.9554E+00  .1659E+02  .7167E-01  .9602E+00  .8026E+01 -.1287E+03
LLoads 134  .9554E+00 -.3726E+01  .7167E-01 -.9602E+00  .6593E+01 -.2487E-12
LLoads  99 -.9554E+00 -.1659E+02 -.7167E-01  .9602E+00 -.8026E+01  .1287E+03
                                   ***BEAM  NO.    9***
GLoads 135 -.3588E+01 -.5135E+01 -.1876E+00  .1472E+02  .8267E+01  .2963E+02
GLoads 114  .3588E+01  .2545E+02  .1876E+00 -.1472E+02 -.1202E+02  .2763E+03
LLoads 135  .3588E+01  .5135E+01 -.1876E+00 -.1472E+02 -.8267E+01  .2963E+02
LLoads 114 -.3588E+01 -.2545E+02  .1876E+00  .1472E+02  .1202E+02  .2763E+03
                                   ***BEAM  NO.   10***
GLoads 122  .1495E+01  .1477E+03  .2842E-02 -.2668E+00  .4023E+01 -.2064E+02
GLoads 124 -.1495E+01 -.1253E+03 -.2842E-02  .3293E+00 -.4023E+01 -.1224E+02
LLoads 122  .1477E+03  .1495E+01 -.2842E-02  .4023E+01 -.2668E+00  .2064E+02
LLoads 124 -.1253E+03 -.1495E+01  .2842E-02 -.4023E+01  .3293E+00  .1224E+02
                                   ***BEAM  NO.   11***
GLoads 124 -.6518E+00  .1168E+03  .1603E-01 -.1449E+01  .2967E+01  .1224E+02
GLoads 126  .6518E+00 -.9440E+02 -.1603E-01  .1802E+01 -.2967E+01  .2094E+01
LLoads 124  .1168E+03 -.6518E+00 -.1603E-01  .2967E+01 -.1449E+01 -.1224E+02
LLoads 126 -.9440E+02  .6518E+00  .1603E-01 -.2967E+01  .1802E+01 -.2094E+01
                                   ***BEAM  NO.   12***
GLoads 126  .1273E+00  .9624E+02  .4966E-02 -.3892E+01  .1779E+01 -.2094E+01
GLoads 128 -.1273E+00 -.7389E+02 -.4966E-02  .4001E+01 -.1779E+01  .7053E+00
LLoads 126  .9624E+02  .1273E+00 -.4966E-02  .1779E+01 -.3892E+01  .2094E+01
LLoads 128 -.7389E+02 -.1273E+00  .4966E-02 -.1779E+01  .4001E+01  .7053E+00
                                   ***BEAM  NO.   13***
GLoads 128 -.3663E-01  .7415E+02  .3596E-01 -.9219E+01 -.2396E+01  .7053E+00
GLoads 130  .3663E-01 -.5180E+02 -.3596E-01  .1001E+02  .2396E+01  .1004E+00
LLoads 128  .7415E+02 -.3663E-01 -.3596E-01 -.2396E+01 -.9219E+01 -.7053E+00
LLoads 130 -.5180E+02  .3663E-01  .3596E-01  .2396E+01  .1001E+02 -.1004E+00
                                   ***BEAM  NO.   14***
GLoads 130  .3652E-02  .4885E+02 -.3157E-01 -.1213E+02 -.3075E+00 -.1004E+00
GLoads 132 -.3652E-02 -.2091E+02  .3157E-01  .1126E+02  .3075E+00 -.4900E-13
LLoads 130  .4885E+02  .3652E-02  .3157E-01 -.3075E+00 -.1213E+02  .1004E+00
LLoads 132 -.2091E+02 -.3652E-02 -.3157E-01  .3075E+00  .1126E+02  .4900E-13
                                   ***TRUSS NO.   15***
GLoads 132  .0000E+00  .5923E+01  .0000E+00  .0000E+00  .0000E+00  .0000E+00
GLoads 134  .0000E+00 -.5923E+01  .0000E+00  .0000E+00  .0000E+00  .0000E+00
LLoads 132  .5923E+01  .0000E+00  .0000E+00  .0000E+00  .0000E+00  .0000E+00
LLoads 134 -.5923E+01  .0000E+00  .0000E+00  .0000E+00  .0000E+00  .0000E+00
                                   ***BEAM  NO.   16***
GLoads 123 -.1839E+01  .1546E+03  .3765E-01 -.5571E+01 -.2479E+01  .2622E+02
```

========== I M A G E S 3 D ==========
= Copyright (c) 1984 Celestial Software Inc. =
==========

SOLVE BEAM LOADS/STRESSES Version 2.0 07/01/90

L

Load Case 2:GRAVITY LOAD

GLoads Node LLoads Node Stress Node Stress Node	Fx Axial Axial Maximum	Fy Y-Shear Y-Shear Minimum	Fz Z-Shear Z-Shear Cmb. Shear	Mx Torsion Torsion	My Y-Bending Y-Bending	Mz Z-Bending Z-Bending
GLoads 125	.1839E+01	-.1323E+03	-.3765E-01	.6399E+01	.2479E+01	.1424E+02
LLoads 123	.1546E+03	.1839E+01	.3765E-01	-.2479E+01	.5571E+01	.2622E+02
LLoads 125	-.1323E+03	-.1839E+01	-.3765E-01	.2479E+01	-.6399E+01	.1424E+02
			BEAM NO. 17			
GLoads 2	.3998E+00	.1361E+03	.7676E-02	.4171E-01	.5186E+01	-.6387E+01
GLoads 19	-.3998E+00	-.1137E+03	-.7676E-02	.1272E+00	-.5186E+01	-.2409E+01
LLoads 2	.1361E+03	.3998E+00	-.7676E-02	.5186E+01	.4171E-01	.6387E+01
LLoads 19	-.1137E+03	-.3998E+00	.7676E-02	-.5186E+01	.1272E+00	.2409E+01
			BEAM NO. 18			
GLoads 19	-.8043E-01	.1257E+03	-.1156E-01	.5961E+00	.4608E+01	.2409E+01
GLoads 35	.8043E-01	-.1033E+03	.1156E-01	-.8504E+00	-.4608E+01	-.6393E+00
LLoads 19	.1257E+03	-.8043E-01	.1156E-01	.4608E+01	.5961E+00	-.2409E+01
LLoads 35	-.1033E+03	.8043E-01	-.1156E-01	-.4608E+01	-.8504E+00	.6393E+00
			BEAM NO. 19			
GLoads 35	-.6885E-01	.9999E+02	.1409E-01	-.1370E+01	.2373E+01	.6393E+00
GLoads 51	.6885E-01	-.7764E+02	-.1409E-01	.1680E+01	-.2373E+01	.8753E+00
LLoads 35	.9999E+02	-.6885E-01	-.1409E-01	.2373E+01	-.1370E+01	-.6393E+00
LLoads 51	-.7764E+02	.6885E-01	.1409E-01	-.2373E+01	.1680E+01	-.8753E+00
			BEAM NO. 20			
GLoads 51	.2164E+00	.7532E+02	-.1328E-01	-.2999E+01	.6387E+00	-.8753E+00
GLoads 67	-.2164E+00	-.5297E+02	.1328E-01	.2706E+01	-.6387E+00	-.3886E+01
LLoads 51	.7532E+02	.2164E+00	.1328E-01	.6387E+00	-.2999E+01	.8753E+00
LLoads 67	-.5297E+02	-.2164E+00	-.1328E-01	-.6387E+00	.2706E+01	.3886E+01
			BEAM NO. 21			
GLoads 67	-.6478E+00	.5439E+02	.4936E-01	-.1695E+02	-.1599E+01	.3886E+01
GLoads 83	.6478E+00	-.2645E+02	-.4936E-01	.1831E+02	.1599E+01	.1393E+02
LLoads 67	.5439E+02	-.6478E+00	-.4936E-01	-.1599E+01	-.1695E+02	-.3886E+01
LLoads 83	-.2645E+02	.6478E+00	.4936E-01	.1599E+01	.1831E+02	-.1393E+02
			BEAM NO. 22			
GLoads 83	.7363E+01	.3332E+02	.4037E+00	-.5090E+02	-.5482E+01	-.1393E+02
GLoads 99	-.7363E+01	-.1656E+02	-.4037E+00	.5757E+02	.5482E+01	-.1076E+03
LLoads 83	.3332E+02	.7363E+01	-.4037E+00	-.5482E+01	-.5090E+02	.1393E+02
LLoads 99	-.1656E+02	-.7363E+01	.4037E+00	.5482E+01	.5757E+02	.1076E+03
			BEAM NO. 23			
GLoads 5	-.6881E+00	.1442E+03	-.5354E+00	-.1560E+02	.3162E+01	.1280E+02
GLoads 22	.6881E+00	-.1219E+03	.5354E+00	.3820E+01	-.3162E+01	.2336E+01
LLoads 5	.1442E+03	.6881E+00	-.5354E+00	.3162E+01	.1560E+02	.1280E+02
LLoads 22	-.1219E+03	-.6881E+00	.5354E+00	-.3162E+01	-.3820E+01	.2336E+01
			BEAM NO. 24			
GLoads 22	.5486E+00	.1098E+03	.2257E+00	.2029E+02	.3332E+01	-.1553E+02

========== I M A G E S 3 D ==========
= Copyright (c) 1984 Celestial Software Inc. =
==========

SOLVE BEAM LOADS/STRESSES Version 2.0 07/01/90

L

Load Case 2:GRAVITY LOAD

GLoads Node LLoads Node Stress Node Stress Node	Fx Axial Axial Maximum	Fy Y-Shear Y-Shear Minimum	Fz Z-Shear Z-Shear Cmb. Shear	Mx Torsion Torsion	My Y-Bending Y-Bending	Mz Z-Bending Z-Bending
GLoads 38	-.5486E+00	-.8747E+02	-.2257E+00	-.1532E+02	-.3332E+01	.3460E+01
LLoads 22	.1098E+03	-.5486E+00	.2257E+00	.3332E+01	-.2029E+02	-.1553E+02
LLoads 38	-.8747E+02	.5486E+00	-.2257E+00	-.3332E+01	.1532E+02	.3460E+01
			BEAM NO. 25			
GLoads 38	-.4321E+00	.9545E+02	.1246E+00	-.1399E+02	.1237E+01	.6518E+01
GLoads 54	.4321E+00	-.7310E+02	-.1246E+00	.1673E+02	-.1237E+01	.2988E+01
LLoads 38	.9545E+02	.4321E+00	.1246E+00	.1237E+01	.1399E+02	.6518E+01
LLoads 54	-.7310E+02	-.4321E+00	-.1246E+00	-.1237E+01	-.1673E+02	.2988E+01
			BEAM NO. 26			
GLoads 54	.4563E+00	.7785E+02	-.5193E+00	.1456E+02	.1291E+01	-.6885E+00
GLoads 70	-.4563E+00	-.5550E+02	.5193E+00	.2599E+02	-.1291E+01	-.9350E+01
LLoads 54	.7785E+02	.4563E+00	-.5193E+00	.1291E+01	-.1456E+02	-.6885E+00
LLoads 70	-.5550E+02	.4563E+00	.5193E+00	-.1291E+01	.2599E+02	-.9350E+01
			BEAM NO. 27			
GLoads 70	-.3387E+00	.6204E+02	.5889E+00	-.1738E+02	-.6156E+01	-.4153E+01
GLoads 86	.3387E+00	-.3410E+02	-.5889E+00	.3357E+02	.6156E+01	.1347E+02
LLoads 70	.6204E+02	.3387E+00	.5889E+00	-.6156E+01	.1738E+02	-.4153E+01
LLoads 86	-.3410E+02	-.3387E+00	-.5889E+00	.6156E+01	-.3357E+02	.1347E+02
			BEAM NO. 28			
GLoads 86	.1154E+02	.3216E+02	-.1206E+02	.8880E+01	.8137E+01	-.1354E+02
GLoads 102	-.1154E+02	-.1540E+02	.1206E+02	.2079E+03	-.8137E+01	-.1769E+03
LLoads 86	.3216E+02	-.1154E+02	-.1206E+02	.8137E+01	-.8880E+01	-.1354E+02
LLoads 102	-.1540E+02	.1154E+02	.1206E+02	-.8137E+01	.2079E+03	-.1769E+03
			BEAM NO. 29			
GLoads 11	.3384E+01	.2204E+03	.1421E+01	.2908E+02	-.8908E+01	-.6935E+02
GLoads 28	-.3384E+01	-.1856E+03	-.1421E+01	.2191E+01	.8908E+01	-.5104E+01
LLoads 11	.2204E+03	.1421E+01	.3384E+01	.8908E+01	-.6935E+02	.2908E+02
LLoads 28	-.1856E+03	-.1421E+01	-.3384E+01	.8908E+01	-.5104E+01	.2191E+01
			BEAM NO. 30			
GLoads 28	-.1594E+01	.1617E+03	-.9686E+00	-.3026E+02	-.5922E+01	.6389E+02
GLoads 44	.1594E+01	-.1269E+03	.9686E+00	.8951E+01	.5922E+01	-.2882E+02
LLoads 28	.1617E+03	-.9686E+00	-.1594E+01	-.5922E+01	.6389E+02	-.3026E+02
LLoads 44	-.1269E+03	.9686E+00	.1594E+01	.5922E+01	-.2882E+02	.8951E+01
			BEAM NO. 31			
GLoads 44	.6104E+00	.1352E+03	.6550E+00	.8919E+01	-.2409E+01	-.4078E+01
GLoads 60	-.6104E+00	-.1004E+03	-.6550E+00	.5492E+01	.2409E+01	-.9350E+01
LLoads 44	.1352E+03	.6550E+00	.6104E+00	-.2409E+01	-.4078E+01	.8919E+01
LLoads 60	-.1004E+03	-.6550E+00	-.6104E+00	.2409E+01	-.9350E+01	.5492E+01
			BEAM NO. 32			
GLoads 60	-.1063E+01	.1091E+03	-.7227E+00	-.1720E+01	.4378E+01	-.5489E+01

========== I M A G E S 3 D ==========
= Copyright (c) 1984 Celestial Software Inc. =
==========

SOLVE BEAM LOADS/STRESSES Version 2.0 07/01/90

L

Load Case 2:GRAVITY LOAD

GLoads Node LLoads Node Stress Node Stress Node	Fx Axial Axial Maximum	Fy Y-Shear Y-Shear Minimum	Fz Z-Shear Z-Shear Cmb. Shear	Mx Torsion Torsion	My Y-Bending Y-Bending	Mz Z-Bending Z-Bending
GLoads 76	.1063E+01	-.7427E+02	.7227E+00	-.1418E+02	-.4378E+01	.2888E+02
LLoads 60	.1091E+03	-.7227E+00	-.1063E+01	.4378E+01	-.5489E+01	-.1720E+01
LLoads 76	-.7427E+02	.7227E+00	.1063E+01	-.4378E+01	.2888E+02	-.1418E+02
			BEAM NO. 33			
GLoads 76	.1666E+01	.8242E+02	.5929E+00	-.1485E+01	.7699E+01	.2133E+02
GLoads 92	-.1666E+01	-.3892E+02	-.5929E+00	.1779E+02	-.7699E+01	-.6715E+02
LLoads 76	.8242E+02	.5929E+00	.1666E+01	.7699E+01	.2133E+02	-.1485E+01
LLoads 92	-.3892E+02	-.5929E+00	-.1666E+01	-.7699E+01	-.6715E+02	.1779E+02
			BEAM NO. 34			
GLoads 92	-.3275E+01	.3607E+02	.1364E+02	.3714E+02	.1508E+02	-.1299E+03
GLoads 108	.3275E+01	-.9967E+01	-.1364E+02	.1879E+03	-.1508E+02	.1840E+03
LLoads 92	.3607E+02	.1364E+02	-.3275E+01	.1508E+02	-.1299E+03	.3714E+02
LLoads 108	-.9967E+01	-.1364E+02	.3275E+01	-.1508E+02	.1840E+03	.1879E+03
			BEAM NO. 35			
GLoads 17	-.7855E+00	.1373E+03	.1708E-01	-.5394E+01	-.3773E+01	.1243E+02
GLoads 34	.7855E+00	-.1150E+03	-.1708E-01	.5769E+01	.3773E+01	.4851E+01
LLoads 17	.1373E+03	.7855E+00	.1708E-01	-.3773E+01	.5394E+01	.1243E+02
LLoads 34	-.1150E+03	-.7855E+00	-.1708E-01	.3773E+01	-.5769E+01	.4851E+01
			BEAM NO. 36			
GLoads 34	.2209E+00	.1265E+03	.3068E-02	-.1479E+02	-.2879E+01	-.4851E+01
GLoads 50	-.2209E+00	-.1042E+03	-.3068E-02	.1486E+02	.2879E+01	-.8537E-02
LLoads 34	.1265E+03	-.2209E+00	.3068E-02	-.2879E+01	.1479E+02	-.4851E+01
LLoads 50	-.1042E+03	.2209E+00	-.3068E-02	.2879E+01	-.1486E+02	-.8537E-02
			BEAM NO. 37			
GLoads 50	-.3377E+00	.1015E+03	.4007E-01	-.2767E+02	.7762E+00	.8537E-02
GLoads 66	.3377E+00	-.7915E+02	-.4007E-01	.2855E+02	-.7762E+00	.7421E+01
LLoads 50	.1015E+03	.3377E+00	.4007E-01	.7762E+00	.2767E+02	.8537E-02
LLoads 66	-.7915E+02	-.3377E+00	-.4007E-01	-.7762E+00	-.2855E+02	.7421E+01
			BEAM NO. 38			
GLoads 66	.2000E+01	.7893E+02	-.5136E-01	-.3330E+02	.5724E+01	-.7421E+01
GLoads 82	-.2000E+01	-.5658E+02	.5136E-01	.3217E+02	-.5724E+01	-.3657E+02
LLoads 66	.7893E+02	-.2000E+01	-.5136E-01	.5724E+01	.3330E+02	-.7421E+01
LLoads 82	-.5658E+02	.2000E+01	.5136E-01	-.5724E+01	-.3217E+02	-.3657E+02
			BEAM NO. 39			
GLoads 82	-.6771E+01	.6307E+02	.2247E+00	-.9021E+02	-.1272E+01	.3657E+02
GLoads 98	.6771E+01	-.3513E+02	-.2247E+00	.9639E+02	.1272E+01	.1496E+03
LLoads 82	.6307E+02	.6771E+01	.2247E+00	-.1272E+01	.9021E+02	.3657E+02
LLoads 98	-.3513E+02	-.6771E+01	-.2247E+00	.1272E+01	-.9639E+02	.1496E+03
			BEAM NO. 40			
GLoads 98	-.4232E+02	.3556E+02	.2354E+01	.1009E+03	.1180E+01	.3255E+03

========== I M A G E S 3 D ==========
= Copyright (c) 1984 Celestial Software Inc. =
==========

SOLVE BEAM LOADS/STRESSES Version 2.0 07/01/90

L

Load Case 2:GRAVITY LOAD

GLoads Node LLoads Node Stress Node Stress Node	Fx Axial Axial Maximum	Fy Y-Shear Y-Shear Minimum	Fz Z-Shear Z-Shear Cmb. Shear	Mx Torsion Torsion	My Y-Bending Y-Bending	Mz Z-Bending Z-Bending
GLoads 114	.4232E+02	-.1879E+02	-.2354E+01	-.6204E+02	-.1180E+01	.3727E+03
LLoads 98	.3556E+02	.4232E+02	.2354E+01	.1180E+01	-.1009E+03	.3255E+03
LLoads 114	-.1879E+02	-.4232E+02	-.2354E+01	-.1180E+01	.6204E+02	.3727E+03
			BEAM NO. 41			
GLoads 99	-.3153E+01	-.4171E+01	.8993E-01	.3484E+02	-.5241E+01	-.1165E+03
GLoads 100	.3153E+01	.1806E+02	-.8993E-01	-.3484E+02	.4012E+01	-.3543E+02
LLoads 99	-.3153E+01	.4171E+01	-.8993E-01	.3484E+02	.5241E+01	.1165E+03
LLoads 100	.3153E+01	-.1806E+02	.8993E-01	-.3484E+02	-.4012E+01	.3543E+02
			BEAM NO. 42			
GLoads 100	-.1152E+02	.9796E+01	.1894E+00	.3009E+02	.2477E+01	.3543E+02
GLoads 101	.1152E+02	.4088E+01	-.1894E+00	-.3009E+02	-.5065E+01	.3569E+01
LLoads 100	-.1152E+02	-.9796E+01	-.1894E+00	.3009E+02	-.2477E+01	-.3543E+02
LLoads 101	.1152E+02	-.4088E+01	.1894E+00	-.3009E+02	.5065E+01	-.3569E+01
			BEAM NO. 43			
GLoads 101	-.1972E+02	-.9375E+01	-.1771E+00	.5147E+02	.3984E+01	-.3569E+01
GLoads 102	.1972E+02	.2326E+02	.1771E+00	-.5147E+02	-.1563E+01	-.2194E+03
LLoads 101	-.1972E+02	.9375E+01	.1771E+00	.5147E+02	-.3984E+01	.3569E+01
LLoads 102	.1972E+02	-.2326E+02	-.1771E+00	-.5147E+02	.1563E+01	.2194E+03
			BEAM NO. 44			
GLoads 102	-.1595E+00	-.1037E+02	-.6407E+01	-.2258E+03	-.6927E+01	-.2630E+02
GLoads 103	.1595E+00	.2611E+02	.6407E+01	-.5695E+02	.9399E+01	.2630E+02
LLoads 102	.6407E+01	.1037E+02	.1595E+00	.2630E+02	.6927E+01	.2258E+03
LLoads 103	-.6407E+01	-.2611E+02	-.1595E+00	-.2630E+02	-.9399E+01	.5695E+02
			BEAM NO. 45			
GLoads 103	.1277E+00	.1047E+02	.5208E+01	.5695E+02	-.1036E+02	-.6033E+01
GLoads 104	-.1277E+00	.5281E+01	-.5208E+01	-.1677E+02	.8379E+01	.6033E+01
LLoads 103	-.5208E+01	-.1047E+02	-.1277E+00	.6033E+01	.1036E+02	-.5695E+02
LLoads 104	.5208E+01	-.5281E+01	.1277E+00	-.6033E+01	-.8379E+01	.1677E+02
			BEAM NO. 46			
GLoads 104	-.2903E-02	.7597E+01	.7560E+01	.1677E+02	-.3291E+01	-.7790E+01
GLoads 105	.2903E-02	.8151E+01	-.7560E+01	-.2106E+02	.3336E+01	.7790E+01
LLoads 104	-.7560E+01	-.7597E+01	.2903E-02	.7790E+01	.3291E+01	-.1677E+02
LLoads 105	.7560E+01	-.8151E+01	-.2903E-02	-.7790E+01	-.3336E+01	.2106E+02
			BEAM NO. 47			
GLoads 105	.5381E-01	.8046E+01	.5874E+01	.2106E+02	-.1759E+01	-.4421E+01
GLoads 106	-.5381E-01	.7702E+01	-.5874E+01	-.1839E+02	.9247E+00	.4421E+01
LLoads 105	-.5874E+01	-.8046E+01	-.5381E-01	.4421E+01	.1759E+01	-.2106E+02
LLoads 106	.5874E+01	-.7702E+01	.5381E-01	-.4421E+01	-.9247E+00	.1839E+02
			BEAM NO. 48			
GLoads 106	.5334E-01	.6658E+01	.4365E+00	.1839E+02	.3277E+01	-.4104E+01

```
============== I M A G E S  3 D ==============
= Copyright (c) 1984   Celestial Software Inc. =
===============================================
```

SOLVE BEAM LOADS/STRESSES Version 2.0 07/01/90

L

Load Case 2:GRAVITY LOAD

GLoads Node LLoads Node Stress Node Stress Node	Fx Axial Axial Maximum	Fy Y-Shear Y-Shear Minimum	Fz Z-Shear Z-Shear Cmb. Shear	Mx Torsion Torsion	My Y-Bending Y-Bending	Mz Z-Bending Z-Bending
GLoads 107	-.5334E-01	.9090E+01	-.4365E+00	-.3724E+02	-.4104E+01	.4104E+01
LLoads 106	-.4365E+00	-.6658E+01	-.5334E-01	.4104E+01	-.3277E+01	-.1839E+02
LLoads 107	.4365E+00	-.9090E+01	.5334E-01	-.4104E+01	.4104E+01	.3724E+02
			BEAM NO. 49			
GLoads 107	.2706E-01	.1738E+02	-.1282E+02	.3724E+02	.7852E+01	-.6940E+01
GLoads 108	-.2706E-01	-.1633E+01	.1282E+02	.1101E+03	-.8271E+01	.6940E+01
LLoads 107	.1282E+02	-.1738E+02	-.2706E-01	.6940E+01	-.7852E+01	-.3724E+02
LLoads 108	-.1282E+02	.1633E+01	.2706E-01	-.6940E+01	.8271E+01	-.1101E+03
			BEAM NO. 50			
GLoads 108	-.4228E+01	.1124E+02	-.2946E+00	.5832E+01	.1731E+02	.6724E+02
GLoads 109	.4228E+01	.4171E+01	.2946E+00	-.5832E+01	-.1284E+02	-.1364E+02
LLoads 108	-.4228E+01	-.1124E+02	.2946E+00	.5832E+01	-.1731E+02	-.6724E+02
LLoads 109	.4228E+01	-.4171E+01	-.2946E+00	-.5832E+01	.1284E+02	.1364E+02
			BEAM NO. 51			
GLoads 109	-.5430E+01	.7287E+01	.2044E-01	-.1276E+02	.3927E+01	.1364E+02
GLoads 110	.5430E+01	.8122E+01	-.2044E-01	.1276E+02	-.4237E+01	-.1998E+02
LLoads 109	-.5430E+01	-.7287E+01	-.2044E-01	-.1276E+02	-.3927E+01	-.1364E+02
LLoads 110	.5430E+01	-.8122E+01	.2044E-01	.1276E+02	.4237E+01	.1998E+02
			BEAM NO. 52			
GLoads 110	-.6401E+01	.7700E+01	-.1102E+00	-.1128E+02	.3583E+01	.1998E+02
GLoads 111	.6401E+01	.7709E+01	.1102E+00	.1128E+02	-.1912E+01	-.2005E+02
LLoads 110	-.6401E+01	-.7700E+01	.1102E+00	-.1128E+02	-.3583E+01	-.1998E+02
LLoads 111	.6401E+01	-.7709E+01	-.1102E+00	.1128E+02	.1912E+01	.2005E+02
			BEAM NO. 53			
GLoads 111	-.7059E+01	.8050E+01	-.2935E-01	-.1520E+02	-.6891E+00	.2005E+02
GLoads 112	.7059E+01	.7359E+01	.2935E-01	.1520E+02	.1134E+01	-.1480E+02
LLoads 111	-.7059E+01	-.8050E+01	.2935E-01	-.1520E+02	.6891E+00	-.2005E+02
LLoads 112	.7059E+01	-.7359E+01	-.2935E-01	.1520E+02	-.1134E+01	.1480E+02
			BEAM NO. 54			
GLoads 112	-.4718E+01	.4366E+01	-.1672E+00	-.8167E+01	-.5408E+01	.1480E+02
GLoads 113	.4718E+01	.1104E+02	.1672E+00	.8167E+01	.7944E+01	-.6544E+02
LLoads 112	-.4718E+01	-.4366E+01	.1672E+00	-.8167E+01	.5408E+01	-.1480E+02
LLoads 113	.4718E+01	-.1104E+02	-.1672E+00	.8167E+01	-.7944E+01	.6544E+02
			BEAM NO. 55			
GLoads 113	.2645E+01	.3107E+02	-.2471E+00	.3011E+01	-.2127E+02	.6544E+02
GLoads 114	-.2645E+01	-.1566E+02	.2471E+00	-.3011E+01	.2502E+02	.2890E+03
LLoads 113	.2645E+01	-.3107E+02	.2471E+00	.3011E+01	.2127E+02	-.6544E+02
LLoads 114	-.2645E+01	.1566E+02	-.2471E+00	-.3011E+01	-.2502E+02	-.2890E+03
			BEAM NO. 56			
GLoads 115	-.1242E+01	.1600E+05	.2150E+01	-.2390E+03	.8467E+00	-.1381E+03


```
============== I M A G E S  3 D ==============
= Copyright (c) 1984   Celestial Software Inc. =
===============================================
```

SOLVE BEAM LOADS/STRESSES Version 2.0 07/01/90

L

Load Case 2:GRAVITY LOAD

GLoads Node LLoads Node Stress Node Stress Node	Fx Axial Axial Maximum	Fy Y-Shear Y-Shear Minimum	Fz Z-Shear Z-Shear Cmb. Shear	Mx Torsion Torsion	My Y-Bending Y-Bending	Mz Z-Bending Z-Bending
GLoads 120	.1242E+01	-.1548E+05	-.2150E+01	.1250E+03	-.8467E+00	.7224E+02
LLoads 115	-.1600E+05	.1553E+01	-.1937E+01	-.8467E+00	.2153E+03	-.1727E+03
LLoads 120	.1548E+05	.1553E+01	.1937E+01	.8467E+00	-.1126E+03	.9034E+02
			BEAM NO. 57			
GLoads 120	-.1242E+01	-.1452E+05	.2150E+01	-.1250E+03	.8467E+00	-.7224E+02
GLoads 121	.1242E+01	.1515E+05	-.2150E+01	-.9342E+01	-.8467E+00	-.5399E+01
LLoads 120	.1452E+05	-.1553E+01	-.1937E+01	-.8467E+00	.1126E+03	-.9034E+02
LLoads 121	-.1515E+05	.1553E+01	.1937E+01	.8467E+00	.8418E+01	-.6751E+01
			BEAM NO. 58			
GLoads 116	.5827E+00	.3996E+04	-.1114E+00	.5773E+01	-.1410E+02	.7412E+04
GLoads 121	-.5827E+00	-.3787E+04	.1114E+00	-.5773E+01	.1644E+02	.7431E+05
LLoads 116	.5827E+00	.3996E+04	-.1114E+00	.5773E+01	-.1410E+02	.7412E+04
LLoads 121	-.5827E+00	-.3787E+04	.1114E+00	-.5773E+01	.1644E+02	.7431E+05
			BEAM NO. 59			
GLoads 117	.8335E-01	.3995E+04	-.1008E+01	-.7394E+04	-.7840E+01	.3467E+01
GLoads 121	-.8335E-01	-.3785E+04	.1008E+01	-.7430E+05	.9590E+01	-.3467E+01
LLoads 117	-.1008E+01	.3995E+04	-.8335E-01	.3467E+01	-.7840E+01	.7394E+04
LLoads 121	.1008E+01	-.3785E+04	.8335E-01	-.3467E+01	.9590E+01	.7430E+05
			BEAM NO. 60			
GLoads 118	.5827E+00	.3995E+04	-.2167E-01	.5153E+01	.1556E+02	-.7399E+04
GLoads 121	-.5827E+00	-.3786E+04	.2167E-01	-.5153E+01	-.1602E+02	-.7430E+05
LLoads 118	-.5827E+00	.3995E+04	.2167E-01	-.5153E+01	.1556E+02	.7399E+04
LLoads 121	.5827E+00	-.3786E+04	-.2167E-01	.5153E+01	-.1602E+02	.7430E+05
			BEAM NO. 61			
GLoads 119	-.6425E-02	.3997E+04	-.1008E+01	.7418E+04	.9302E+01	.2847E+01
GLoads 121	.6425E-02	-.3788E+04	.1008E+01	.7432E+05	-.9167E+01	-.2847E+01
LLoads 119	.1008E+01	.3997E+04	-.6425E-02	-.2847E+01	.9302E+01	.7418E+04
LLoads 121	-.1008E+01	-.3788E+04	.6425E-02	.2847E+01	-.9167E+01	.7432E+05
			BEAM NO. 62			
GLoads 125	.7116E+00	.1166E+03	.4874E-01	-.1829E+02	-.5538E+00	-.1424E+02
GLoads 127	-.7116E+00	-.9428E+02	-.4874E-01	.1936E+02	.5538E+00	-.1413E+01
LLoads 125	.1166E+03	-.7116E+00	.4874E-01	-.5538E+00	.1829E+02	-.1424E+02
LLoads 127	-.9428E+02	.7116E+00	-.4874E-01	.5538E+00	-.1936E+02	-.1413E+01
			BEAM NO. 63			
GLoads 127	-.1118E+00	.9606E+02	.2753E-01	-.3190E+02	.1740E+01	.1413E+01
GLoads 129	.1118E+00	-.7371E+02	-.2753E-01	.3250E+02	-.1740E+01	.1046E+01
LLoads 127	.9606E+02	.1118E+00	.2753E-01	.1740E+01	.3190E+02	.1413E+01
LLoads 129	-.7371E+02	-.1118E+00	-.2753E-01	-.1740E+01	-.3250E+02	.1046E+01
			BEAM NO. 64			
GLoads 129	.1211E+00	.7650E+02	.1132E+00	-.5148E+02	.1188E+02	-.1046E+01

```
KAISER ENGINEERS HANFORD  S/N:801854                                  02/22/95
PAGE   89                    Run ID=MN61973                           08:50:22
              ============== I M A G E S  3 D ==============
              = Copyright (c) 1984   Celestial Software Inc. =
              ================================================

          SOLVE BEAM LOADS/STRESSES    Version 2.0  07/01/90

      L

Load Case  2:GRAVITY LOAD

GLoads Node     Fx          Fy          Fz          Mx          My          Mz
LLoads Node    Axial       Y-Shear     Z-Shear     Torsion     Y-Bending   Z-Bending
Stress Node    Axial       Y-Shear     Z-Shear     Torsion     Y-Bending   Z-Bending
Stress Node   Maximum     Minimum    Cmb. Shear
------ ---- ---------- ---------- ---------- ---------- ---------- ----------
GLoads  131 -.1211E+00 -.5415E+02 -.1132E+00  .5398E+02 -.1188E+02 -.1619E+01
LLoads  129  .7650E+02 -.1211E+00  .1132E+00  .1188E+02  .5148E+02 -.1046E+01
LLoads  131 -.5415E+02  .1211E+00 -.1132E+00 -.1188E+02 -.5398E+02 -.1619E+01
                          ***BEAM  NO.   65***
GLoads  131 -.3115E+00  .4931E+02 -.2032E+00 -.4290E+02 -.9416E+01  .1619E+01
GLoads  133  .3115E+00 -.2137E+02  .2032E+00  .3731E+02  .9416E+01  .6948E+01
LLoads  131  .4931E+02  .3115E+00 -.2032E+00 -.9416E+01  .4290E+02  .1619E+01
LLoads  133 -.2137E+02 -.3115E+00  .2032E+00  .9416E+01 -.3731E+02  .6948E+01
                          ***BEAM  NO.   66***
GLoads  133  .2217E+01  .1259E+02 -.1258E+01 -.1488E+02 -.7148E+01 -.6948E+01
GLoads  135 -.2217E+01  .4172E+01  .1258E+01 -.5877E+01  .7148E+01 -.2963E+02
LLoads  133  .1259E+02 -.2217E+01 -.1258E+01 -.7148E+01  .1488E+02 -.6948E+01
LLoads  135  .4172E+01  .2217E+01  .1258E+01  .7148E+01  .5877E+01 -.2963E+02
                          ***BEAM  NO.   67***
GLoads  115 -.8973E+03 -.4020E+04  .2067E+01 -.2330E+03  .2931E+02  .4625E+03
GLoads  116  .8973E+03  .5189E+04 -.2067E+01 -.5773E+01  .1410E+02 -.7412E+04
LLoads  115  .4115E+04 -.1638E+03  .2067E+01  .1284E+02 -.2345E+03  .4625E+03
LLoads  116 -.5266E+04 -.4539E+02 -.2067E+01 -.1284E+02 -.8202E+01 -.7412E+04
                          ***BEAM  NO.   68***
GLoads  115 -.1198E+01 -.4020E+04 -.8940E+03 -.8385E+03  .1731E+02 -.1349E+03
GLoads  117  .1198E+01  .5190E+04  .8940E+03  .7394E+04  .7840E+01 -.3467E+01
LLoads  115  .4115E+04 -.1604E+03  .1198E+01  .7093E+01 -.1358E+03  .8385E+03
LLoads  117 -.5266E+04 -.4876E+02 -.1198E+01 -.7093E+01 -.4813E+01 -.7394E+04
                          ***BEAM  NO.   69***
GLoads  115  .8949E+03 -.4020E+04  .2053E+01 -.2319E+03 -.2754E+02 -.7379E+03
GLoads  118 -.8949E+03  .5189E+04 -.2053E+01 -.5153E+01 -.1556E+02  .7399E+04
LLoads  115  .4115E+04 -.1613E+03 -.2053E+01 -.1439E+02  .2331E+03  .7379E+03
LLoads  118 -.5266E+04 -.4786E+02  .2053E+01  .1439E+02  .7854E+01 -.7399E+04
                          ***BEAM  NO.   70***
GLoads  115 -.1183E+01 -.4019E+04  .8982E+03  .3619E+03 -.1554E+02 -.1338E+03
GLoads  119  .1183E+01  .5189E+04 -.8982E+03 -.7418E+04 -.9302E+01 -.2847E+01
LLoads  115  .4115E+04 -.1647E+03 -.1183E+01 -.8642E+01  .1344E+03  .3619E+03
LLoads  119 -.5266E+04 -.4449E+02  .1183E+01  .8642E+01  .4465E+01 -.7418E+04
```

```
KAISER ENGINEERS HANFORD  S/N:801854                                  02/22/95
PAGE   90                    Run ID=MN61973                           08:50:23
              ============== I M A G E S  3 D ==============
              = Copyright (c) 1984   Celestial Software Inc. =
              ================================================

          SOLVE BEAM LOADS/STRESSES    Version 2.0  07/01/90

      L

Load Case  2:GRAVITY LOAD

                MAXIMUM STRESS SUMMARY FOR BEAMS/TRUSSES
                   WITHIN SPECIFIED RANGE    1-   70

          Maximum (absolute) Stress =  .4557E+03 at BEAM    56

 Beam     Axial       Y-Shear     Z-Shear     Torsion     Y-Bending   Z-Bending
 ----  ---------- ---------- ---------- ---------- ---------- ----------
   56   .4547E+03 -.8826E-01 -.1101E+00  .4812E-04 -.5482E+00  .4396E+00
         Maximum    Minimum    Cmb. Shear
        ---------- ---------- ---------- ----------
        .4557E+03  .4537E+03  .2278E+03
```

========== I M A G E S 3 D ==========
= Copyright (c) 1984 Celestial Software Inc. =
==========

SOLVE PLATE LOADS/STRESSES Version 2.0 07/01/90

L

Load Case 2:GRAVITY LOAD

PLATE LOADS AND/OR STRESSES

GLoads	Node	Fx	Fy	Fz	Mx	My	Mz
				PLATE 1			
GLoads	2	.9833E+02	.2615E+03	-.7696E-01	-.1955E+01	.3168E+00	.0000E+00
GLoads	3	-.8562E+02	.2401E+03	-.3503E+00	-.2426E+01	.2563E+00	.0000E+00
GLoads	20	-.6920E+02	-.2606E+03	.2576E+00	-.2999E+01	-.1103E+01	.0000E+00
GLoads	19	.5648E+02	-.2410E+03	.1696E+00	-.2019E+01	-.7367E+00	.0000E+00
				PLATE 2			
GLoads	5	.8289E+02	.2378E+03	.2165E+00	.2426E+01	.9224E+00	.0000E+00
GLoads	4	-.9594E+02	.2583E+03	.1145E+01	.1311E+02	.1101E+01	.0000E+00
GLoads	21	-.5250E+02	-.2373E+03	-.9639E+00	.1268E+02	.2518E+00	.0000E+00
GLoads	20	.6554E+02	-.2588E+03	-.3977E+00	.1738E+01	.2014E+00	.0000E+00
				PLATE 3			
GLoads	4	.6987E+02	.2278E+03	-.1179E+01	-.1311E+02	.3266E+00	.0000E+00
GLoads	5	-.1004E+03	.2835E+03	-.4162E+01	-.4597E+02	.8193E+00	.0000E+00
GLoads	22	-.3154E+02	-.2344E+03	.4251E+01	-.4506E+02	.7454E+00	.0000E+00
GLoads	21	.6208E+02	-.2770E+03	.1090E+01	-.1337E+02	-.6705E+00	.0000E+00
				PLATE 4			
GLoads	5	-.6061E+01	.3364E+03	-.1155E+03	.0000E+00	-.6701E+00	.6790E+02
GLoads	6	-.1795E+01	.2400E+03	.5363E+02	.0000E+00	.1916E-01	.1804E+02
GLoads	23	.1578E+01	-.3279E+03	.7741E+02	-.1919E+02	-.6417E+00	.0000E+00
GLoads	22	.6278E+01	-.2485E+03	-.1549E+02	.0000E+00	-.2065E+01	.6770E+02
				PLATE 5			
GLoads	6	.1548E+01	.3049E+03	-.1112E+03	.0000E+00	.6312E-01	-.1804E+02
GLoads	7	.5131E+00	.2500E+03	.7299E+02	.0000E+00	.3603E+00	-.5170E+01
GLoads	24	-.4077E+00	-.3043E+03	.8521E+02	.5173E+01	.8063E+00	.0000E+00
GLoads	23	-.1654E+01	-.2506E+03	-.4696E+02	.1696E+02	.4054E+00	.0000E+00
				PLATE 6			
GLoads	7	-.4444E+00	.2849E+03	-.1018E+03	.0000E+00	-.5035E+00	.5170E+01
GLoads	8	-.3637E+00	.2689E+03	.9106E+02	.0000E+00	-.2697E+00	.3610E+01
GLoads	25	.2614E+00	-.2841E+03	.8032E+02	-.3989E+01	-.1479E+00	.0000E+00
GLoads	24	.5467E+00	-.2696E+03	-.6959E+02	-.5009E+01	-.6646E+00	.0000E+00
				PLATE 7			
GLoads	8	.2774E+00	.2659E+03	-.8947E+02	.0000E+00	-.1632E+00	-.3610E+01
GLoads	9	.7649E+00	.2841E+03	.1027E+03	.0000E+00	-.6047E-01	-.8030E+01
GLoads	26	-.7355E+00	-.2654E+03	.6846E+02	.8050E+01	.4125E+00	.0000E+00
GLoads	25	-.3068E+00	-.2846E+03	-.8165E+02	.3241E+01	.2669E+00	.0000E+00
				PLATE 8			
GLoads	9	-.7604E+00	.2444E+03	-.7167E+02	.0000E+00	-.4094E+00	.8030E+01
GLoads	10	-.2754E+01	.2997E+03	.1110E+03	.0000E+00	-.3065E+00	.3099E+02
GLoads	27	.2744E+01	-.2438E+03	.4718E+02	-.3047E+02	.5230E+00	.0000E+00
GLoads	26	.7706E+00	-.3002E+03	-.8653E+02	-.7832E+01	.3560E-01	.0000E+00

========== I M A G E S 3 D ==========
= Copyright (c) 1984 Celestial Software Inc. =
==========

SOLVE PLATE LOADS/STRESSES Version 2.0 07/01/90

L

Load Case 2:GRAVITY LOAD

GLoads	Node	Fx	Fy	Fz	Mx	My	Mz
				PLATE 9			
GLoads	10	.2842E+01	.2370E+03	-.5675E+02	.0000E+00	-.4176E+00	-.3099E+02
GLoads	11	.1033E+02	.3278E+03	.1144E+03	.0000E+00	-.4726E+00	-.1140E+03
GLoads	28	-.1042E+02	-.2460E+03	.2206E+02	.0000E+00	-.4044E+00	-.1134E+03
GLoads	27	-.2746E+01	-.3188E+03	-.7966E+02	.3139E+02	-.2049E+00	.0000E+00
				PLATE 10			
GLoads	11	.1152E+03	.3223E+03	.7919E+01	.8818E+02	-.1066E+01	.0000E+00
GLoads	12	-.5882E+02	.2320E+03	.2083E+01	.2242E+02	-.4008E+00	.0000E+00
GLoads	29	-.8155E+02	-.3138E+03	-.2153E+01	.2231E+02	.8440E+00	.0000E+00
GLoads	28	.2519E+02	-.2405E+03	-.7849E+01	.8714E+02	-.4377E+00	.0000E+00
				PLATE 11			
GLoads	12	.1137E+03	.2970E+03	-.2135E+01	-.2242E+02	-.6202E+00	.0000E+00
GLoads	13	-.7305E+02	.2388E+03	-.5190E+00	-.7334E+01	-.4024E+00	.0000E+00
GLoads	30	-.9049E+02	-.2977E+03	.5877E+00	-.6575E+01	.1484E+01	.0000E+00
GLoads	29	.4984E+02	-.2381E+03	.2067E+01	-.2206E+02	.5802E+00	.0000E+00
				PLATE 12			
GLoads	13	.1084E+03	.2844E+03	.6341E+00	.7334E+01	-.1228E+01	.0000E+00
GLoads	14	-.9071E+02	.2594E+03	.8864E-01	.2649E+00	-.1321E+01	.0000E+00
GLoads	31	-.8966E+02	-.2851E+03	-.2397E+00	.2023E+00	.1281E+00	.0000E+00
GLoads	30	.7196E+02	-.2587E+03	-.4831E+00	.8099E+01	.1307E+00	.0000E+00
				PLATE 13			
GLoads	14	.1013E+03	.2734E+03	-.1721E+00	-.2649E+00	-.4611E+00	.0000E+00
GLoads	15	-.1031E+03	.2771E+03	.6721E-01	-.1598E+01	-.7898E+00	.0000E+00
GLoads	32	-.8377E+02	-.2744E+03	.3837E-01	-.2862E+00	.1247E+01	.0000E+00
GLoads	31	.8559E+02	-.2761E+03	.6651E-01	-.1580E+00	.1605E+01	.0000E+00
				PLATE 14			
GLoads	15	.9198E+02	.2626E+03	.1887E+00	.1598E+01	-.1041E+01	.0000E+00
GLoads	16	-.1132E+03	.2946E+03	-.6700E-01	-.1066E+01	-.1747E+01	.0000E+00
GLoads	33	-.7334E+02	-.2638E+03	-.1764E+00	-.8831E+00	-.1069E+01	.0000E+00
GLoads	32	.9458E+02	-.2934E+03	.5474E-01	.3028E+01	.1663E+00	.0000E+00
				PLATE 15			
GLoads	16	.7827E+02	.2499E+03	-.3677E-01	.1066E+01	.3508E+00	.0000E+00
GLoads	17	-.1214E+03	.3143E+03	.2136E+00	.4260E+00	-.3187E+00	.0000E+00
GLoads	34	-.5536E+02	-.2517E+03	-.5721E-02	.1271E+01	.8738E+00	.0000E+00
GLoads	33	.9853E+02	-.3126E+03	-.1712E+00	.1128E+01	.2248E+01	.0000E+00
				PLATE 16			
GLoads	19	.1569E+02	.2240E+03	-.4399E-01	-.6140E+00	.1381E+01	.0000E+00
GLoads	20	-.8955E+01	.2121E+03	.2513E+00	.2499E+01	.3259E+00	.0000E+00
GLoads	36	-.1010E+02	-.2229E+03	.2448E-01	.3092E+01	.4117E+00	.0000E+00
GLoads	35	.3366E+01	-.2132E+03	-.2318E+00	-.4154E+00	.1651E+01	.0000E+00
				PLATE 17			
GLoads	20	.1261E+02	.2222E+03	-.1113E+00	-.1238E+01	.5753E+00	.0000E+00

KAISER ENGINEERS HANFORD S/N:801854 02/22/95
PAGE 93 Run ID=MN61973 08:50:25

```
============== I M A G E S  3 D ==============
= Copyright (c) 1984   Celestial Software Inc. =
===============================================
```

SOLVE PLATE LOADS/STRESSES Version 2.0 07/01/90

L

Load Case 2:GRAVITY LOAD

GLoads	Node	Fx	Fy	Fz	Mx	My	Mz
GLoads	21	-.5621E+01	.2116E+03	-.4196E+00	-.4298E+01	.8619E+00	.0000E+00
GLoads	37	-.8152E+01	-.2229E+03	.4048E+00	-.5060E+01	-.3583E+00	.0000E+00
GLoads	36	.1168E+01	-.2110E+03	.1261E+00	-.1084E+01	-.1281E+01	.0000E+00
				PLATE 18			
GLoads	21	-.3963E+01	.2176E+03	.2934E+00	.4987E+01	-.4433E+00	.0000E+00
GLoads	22	.1905E+02	.1837E+03	.1861E+01	.2095E+02	.2758E+01	.0000E+00
GLoads	38	-.2611E+01	-.2080E+03	-.1571E+01	.1815E+02	.2357E+01	.0000E+00
GLoads	37	-.1248E+02	-.1933E+03	-.5839E+00	.3313E+01	-.7014E+00	.0000E+00
				PLATE 19			
GLoads	22	.4976E+01	.2204E+03	.8618E+01	.0000E+00	-.1608E+01	-.5451E+02
GLoads	23	.1320E+01	.2330E+03	-.6465E+01	.1606E+02	.8382E+00	.0000E+00
GLoads	39	-.1329E+01	-.2300E+03	.1708E+01	.1520E+02	.1674E+01	.0000E+00
GLoads	38	-.4967E+01	-.2235E+03	-.3862E+01	.0000E+00	-.1043E+01	-.5274E+02
				PLATE 20			
GLoads	23	-.1244E+01	.2489E+03	-.2398E+02	-.1384E+02	-.6019E+00	.0000E+00
GLoads	24	-.4546E+00	.2354E+03	.1585E+02	-.4014E+01	.3910E+00	.0000E+00
GLoads	40	.2736E+00	-.2469E+03	.1884E+02	-.5179E+01	-.5036E+00	.0000E+00
GLoads	39	.1426E+01	-.2374E+03	-.1072E+02	-.1435E+02	-.2091E+01	.0000E+00
				PLATE 21			
GLoads	24	.3156E+00	.2420E+03	-.3148E+02	.3850E+01	-.5326E+00	.0000E+00
GLoads	25	.1782E+00	.2380E+03	.2916E+02	.2209E+01	.2751E+00	.0000E+00
GLoads	41	-.1181E+00	-.2413E+03	.2401E+02	.1964E+01	.9102E+00	.0000E+00
GLoads	40	-.3757E+00	-.2387E+03	-.2170E+02	.2840E+01	.2796E+00	.0000E+00
				PLATE 22			
GLoads	25	-.1329E+00	.2342E+03	-.2783E+02	-.1461E+01	-.3941E+00	.0000E+00
GLoads	26	-.3861E+00	.2413E+03	.3333E+02	-.4108E+01	.4477E-01	.0000E+00
GLoads	42	.3193E+00	-.2335E+03	.2022E+02	-.4333E+01	.8769E-01	.0000E+00
GLoads	41	.1997E+00	-.2421E+03	-.2572E+02	-.1514E+01	-.7738E+00	.0000E+00
				PLATE 23			
GLoads	26	.3510E+00	.2278E+03	-.1526E+02	.3890E+01	-.4928E+00	.0000E+00
GLoads	27	.1266E+01	.2443E+03	.2624E+02	.1382E+02	.1486E+00	.0000E+00
GLoads	43	-.1294E+01	-.2287E+03	.8974E+01	.1410E+02	.1161E+00	.0000E+00
GLoads	42	-.3237E+00	-.2434E+03	-.1996E+02	.3771E+01	-.1964E+00	.0000E+00
				PLATE 24			
GLoads	27	-.1265E+01	.2218E+03	.6244E+01	-.1474E+02	-.4667E+00	.0000E+00
GLoads	28	-.4949E+01	.2103E+03	-.6455E+01	.0000E+00	-.9360E+00	.5458E+02
GLoads	44	.4846E+01	-.2106E+03	-.5361E+00	.0000E+00	-.1214E+00	.5335E+02
GLoads	43	.1368E+01	-.2215E+03	.7475E+00	-.1403E+02	-.7428E-01	.0000E+00
				PLATE 25			
GLoads	28	-.4844E+01	.2047E+03	-.5367E+01	-.5907E+02	-.1208E+01	.0000E+00
GLoads	29	.2449E+01	.2191E+03	-.1406E+01	-.1655E+02	.4960E+00	.0000E+00
GLoads	45	-.1772E+00	-.2156E+03	.1478E+01	-.1544E+02	.2316E+01	.0000E+00

KAISER ENGINEERS HANFORD S/N:801854 02/22/95
PAGE 94 Run ID=MN61973 08:50:26

```
============== I M A G E S  3 D ==============
= Copyright (c) 1984   Celestial Software Inc. =
===============================================
```

SOLVE PLATE LOADS/STRESSES Version 2.0 07/01/90

L

Load Case 2:GRAVITY LOAD

GLoads	Node	Fx	Fy	Fz	Mx	My	Mz
GLoads	44	.2573E+01	-.2081E+03	.5294E+01	-.5793E+02	-.5075E+00	.0000E+00
				PLATE 26			
GLoads	29	.2925E+02	.2384E+03	.1492E+01	.1631E+02	-.1920E+01	.0000E+00
GLoads	30	-.2087E+02	.2255E+03	.2506E+00	.2144E+01	-.4928E+00	.0000E+00
GLoads	46	-.2301E+02	-.2376E+03	-.5002E+00	.2521E+01	.1265E+00	.0000E+00
GLoads	45	.1464E+02	-.2262E+03	-.1243E+01	.1737E+02	-.1498E+01	.0000E+00
				PLATE 27			
GLoads	30	.3941E+02	.2365E+03	-.3552E+00	-.3669E+01	-.1122E+01	.0000E+00
GLoads	31	-.3610E+02	.2325E+03	-.5159E-01	-.2119E+01	-.1285E+01	.0000E+00
GLoads	47	-.3138E+02	-.2373E+03	.5139E-01	-.2900E+00	.1268E+01	.0000E+00
GLoads	46	.2807E+02	-.2317E+03	.3554E+00	-.2872E+01	.1136E+01	.0000E+00
				PLATE 28			
GLoads	31	.4017E+02	.2342E+03	.2247E+00	.2075E+01	-.4484E+00	.0000E+00
GLoads	32	-.4495E+02	.2421E+03	-.6981E-01	-.2069E+01	-.1672E+01	.0000E+00
GLoads	48	-.3174E+02	-.2352E+03	-.1518E+00	-.8416E+00	-.1542E+01	.0000E+00
GLoads	47	.3652E+02	-.2411E+03	-.3141E-02	.4244E+01	.3017E+00	.0000E+00
				PLATE 29			
GLoads	32	.3415E+02	.2313E+03	-.2330E-01	-.6726E+00	.2593E+00	.0000E+00
GLoads	33	-.4675E+02	.2509E+03	.7158E-01	-.1254E+01	-.2119E+01	.0000E+00
GLoads	49	-.2560E+02	-.2326E+03	.4169E-01	.2040E+01	.5477E+00	.0000E+00
GLoads	48	.3821E+02	-.2496E+03	-.8996E-01	.9493E+00	.3030E+01	.0000E+00
				PLATE 30			
GLoads	33	.2156E+02	.2311E+03	.2760E+00	.1009E+01	.9408E+00	.0000E+00
GLoads	34	-.3902E+02	.2591E+03	.6662E-01	-.8557E+00	-.2764E+01	.0000E+00
GLoads	50	-.1394E+02	-.2338E+03	-.4633E+00	.2445E+01	-.4309E+01	.0000E+00
GLoads	49	.3140E+02	-.2564E+03	.1207E+00	.4939E+01	.1165E+00	.0000E+00
				PLATE 31			
GLoads	35	-.8625E+01	.1743E+03	-.7110E-01	.2522E+00	.1952E+01	.0000E+00
GLoads	36	.1430E+02	.1670E+03	.1082E+00	.2383E+00	.5775E+00	.0000E+00
GLoads	52	-.1683E+01	-.1761E+03	-.3591E-01	-.2507E+00	-.1626E+01	.0000E+00
GLoads	51	-.3991E+01	-.1651E+03	-.1168E-02	.5758E+00	.8504E-01	.0000E+00
				PLATE 32			
GLoads	36	-.5366E+01	.1819E+03	-.2587E+00	-.2246E+01	.2921E+00	.0000E+00
GLoads	37	.1963E+02	.1561E+03	-.1530E+00	-.1905E+01	.1450E+01	.0000E+00
GLoads	53	-.5083E+01	-.1790E+03	.5602E+00	-.1755E+01	.2314E+01	.0000E+00
GLoads	52	-.9178E+01	-.1589E+03	-.1485E+00	.3153E+01	.1509E+01	.0000E+00
				PLATE 33			
GLoads	37	.1001E+01	.1750E+03	.3322E+00	.3652E+01	-.3903E+00	.0000E+00
GLoads	38	.1247E+02	.1514E+03	.1093E+01	.1117E+02	.1750E+01	.0000E+00
GLoads	54	-.1171E+02	-.1731E+03	-.1124E+01	.1257E+02	.6599E+00	.0000E+00
GLoads	53	-.1762E+01	-.1533E+03	-.3010E+00	.3961E+01	-.2446E+01	.0000E+00
				PLATE 34			
GLoads	38	-.3915E+01	.1813E+03	.4441E+01	.0000E+00	-.9682E+00	.4276E+02

KAISER ENGINEERS HANFORD S/N:801854 02/22/95
PAGE 95 Run ID=MN61973 08:50:27

```
============== I M A G E S  3 D ==============
= Copyright (c) 1984   Celestial Software Inc. =
===============================================
```

SOLVE PLATE LOADS/STRESSES Version 2.0 07/01/90

L

Load Case 2:GRAVITY LOAD

GLoads	Node	Fx	Fy	Fz	Mx	My	Mz
GLoads	39	-.1129E+01	.1884E+03	-.9873E+00	-.1187E+02	.1730E+01	.0000E+00
GLoads	55	.1002E+01	-.1835E+03	-.2429E+01	-.1306E+02	-.1395E-01	.0000E+00
GLoads	54	.4042E+01	-.1862E+03	-.1025E+01	.0000E+00	-.2717E+01	.4326E+02
				PLATE 35			
GLoads	39	.1032E+01	.1825E+03	.9996E+01	.1103E+02	-.1312E+01	.0000E+00
GLoads	40	.3033E+00	.1989E+03	.4079E+00	.4360E+01	.5911E+00	.0000E+00
GLoads	56	-.2009E+00	-.1841E+03	-.2518E+01	.3990E+01	.2092E+01	.0000E+00
GLoads	55	-.1135E+01	-.1973E+03	-.7886E+01	.1001E+02	.2160E+00	.0000E+00
				PLATE 36			
GLoads	40	-.2011E+00	.1903E+03	.2451E+01	-.2022E+01	-.3671E+00	.0000E+00
GLoads	41	-.1377E+00	.1953E+03	.1576E+01	-.1125E+01	.4979E+00	.0000E+00
GLoads	57	-.1695E-02	-.1896E+03	.1816E+01	-.2057E+01	-.4326E+00	.0000E+00
GLoads	56	.3405E+00	-.1960E+03	-.5843E+01	-.2250E+01	-.1859E+01	.0000E+00
				PLATE 37			
GLoads	41	.5608E-01	.1915E+03	.1294E+00	.6749E+00	-.6343E+00	.0000E+00
GLoads	42	.1213E+00	.1890E+03	-.1188E+01	.1923E+01	.2594E+00	.0000E+00
GLoads	58	-.1133E+00	-.1905E+03	.4105E+01	.1507E+01	.3460E+00	.0000E+00
GLoads	57	-.6408E-01	-.1900E+03	-.3046E+01	-.2029E+00	.1527E+00	.0000E+00
				PLATE 38			
GLoads	42	-.1169E+00	.1914E+03	.9282E+00	-.1361E+01	-.1508E+00	.0000E+00
GLoads	43	-.5237E+00	.1743E+03	-.1052E+02	-.5378E+01	.3086E+00	.0000E+00
GLoads	59	.5257E+00	-.1879E+03	.7806E+01	-.5695E+01	.3167E+00	.0000E+00
GLoads	58	.1149E+00	-.1778E+03	.1790E+01	-.1658E+01	-.4435E+00	.0000E+00
				PLATE 39			
GLoads	43	.4496E+00	.1794E+03	.8033E+00	.5301E+01	-.3505E+00	.0000E+00
GLoads	44	.1864E+01	.1614E+03	-.1005E+02	.0000E+00	.6394E+00	-.2046E+02
GLoads	60	-.1808E+01	-.1745E+03	.8155E+01	.0000E+00	.9503E+00	-.2024E+02
GLoads	59	-.5060E+00	-.1663E+03	.1090E+01	.4914E+01	-.3638E+00	.0000E+00
				PLATE 40			
GLoads	44	-.1149E+02	.1536E+03	.3667E+01	.4006E+02	-.3524E+01	.0000E+00
GLoads	45	-.3856E+01	.1806E+03	.6939E+00	.9111E+01	.1363E+01	.0000E+00
GLoads	61	.2215E+01	-.1583E+03	-.1170E+01	.7911E+01	.1411E+00	.0000E+00
GLoads	60	.1313E+02	-.1758E+03	-.3191E+01	.3886E+02	-.5195E+01	.0000E+00
				PLATE 41			
GLoads	45	-.1060E+02	.1668E+03	-.9293E+00	-.1103E+02	-.2181E+01	.0000E+00
GLoads	46	-.5096E+01	.1935E+03	-.2701E+00	-.2972E+01	-.2633E+00	.0000E+00
GLoads	62	.3405E+01	-.1707E+03	.2312E+00	-.1278E+01	.2037E+01	.0000E+00
GLoads	61	.1229E+02	-.1895E+03	.9683E+00	-.1110E+02	-.1833E+00	.0000E+00
				PLATE 42			
GLoads	46	.4412E-01	.1814E+03	.4149E+00	.3322E+01	-.9992E+00	.0000E+00
GLoads	47	-.9484E+01	.1963E+03	-.1050E+00	-.2257E+01	-.9127E+00	.0000E+00
GLoads	63	-.2995E+01	-.1826E+03	-.2343E+00	-.6234E-01	-.1421E+01	.0000E+00

KAISER ENGINEERS HANFORD S/N:801854 02/22/95
PAGE 96 Run ID=MN61973 08:50:28

```
============== I M A G E S  3 D ==============
= Copyright (c) 1984   Celestial Software Inc. =
===============================================
```

SOLVE PLATE LOADS/STRESSES Version 2.0 07/01/90

L

Load Case 2:GRAVITY LOAD

GLoads	Node	Fx	Fy	Fz	Mx	My	Mz
GLoads	62	.1243E+02	-.1951E+03	-.7557E-01	.5814E+01	-.1813E+01	.0000E+00
				PLATE 43			
GLoads	47	.4339E+01	.1878E+03	.5675E-01	-.1698E+01	-.6574E+00	.0000E+00
GLoads	48	-.1027E+02	.1975E+03	.4985E-01	-.6668E+00	-.3232E+01	.0000E+00
GLoads	64	-.5736E+01	-.1889E+03	-.2227E+00	.3456E+01	-.2928E+00	.0000E+00
GLoads	63	.1166E+02	-.1964E+03	.1161E+00	.1254E+01	.1560E+01	.0000E+00
				PLATE 44			
GLoads	48	.3797E+01	.1928E+03	.1919E+00	.5592E+00	.1743E+01	.0000E+00
GLoads	49	-.6529E+01	.1975E+03	-.1384E+00	-.3912E+01	-.2609E+01	.0000E+00
GLoads	65	-.5591E+01	-.1935E+03	-.1975E+00	-.6927E+00	-.5151E+01	.0000E+00
GLoads	64	.8323E+01	-.1967E+03	.1440E+00	.5224E+01	.9229E+00	.0000E+00
				PLATE 45			
GLoads	49	.7347E+00	.1971E+03	-.2401E-01	-.3066E+01	.1945E+01	.0000E+00
GLoads	50	.3571E+01	.1894E+03	.1353E+00	.9516E-01	-.3500E+01	.0000E+00
GLoads	66	-.6832E+01	-.1957E+03	.1632E+00	.5115E+01	.1067E+00	.0000E+00
GLoads	65	.2527E+01	-.1908E+03	-.2744E+00	.3039E+00	.5975E+01	.0000E+00
				PLATE 46			
GLoads	51	.2216E+00	.1302E+03	-.7403E-01	-.2118E+01	.1409E+01	.0000E+00
GLoads	52	.9130E+01	.1156E+03	-.9715E-01	-.1218E+01	-.1676E+01	.0000E+00
GLoads	68	-.9675E+01	-.1306E+03	.2647E+00	.5363E+00	-.5453E+00	.0000E+00
GLoads	67	.3237E+00	-.1151E+03	-.9357E-01	-.9658E+00	.3103E+01	.0000E+00
				PLATE 47			
GLoads	52	.1732E+01	.1343E+03	.2815E+00	.4622E+01	.1794E+01	.0000E+00
GLoads	53	.9084E+01	.1189E+03	.1233E+01	.1169E+02	.1884E+01	.0000E+00
GLoads	69	-.1011E+02	-.1363E+03	-.1158E+01	.1141E+02	-.1360E+01	.0000E+00
GLoads	68	-.7051E+00	-.1169E+03	-.3570E+00	.5605E+01	-.1287E+01	.0000E+00
				PLATE 48			
GLoads	53	-.2239E+01	.1284E+03	-.1493E+01	-.1390E+02	-.1752E+01	.0000E+00
GLoads	54	.2573E+01	.1270E+03	-.4017E+01	-.4387E+02	.4218E+01	.0000E+00
GLoads	70	.3171E+01	-.1275E+03	.4724E+01	-.4750E+02	.6866E+01	.0000E+00
GLoads	69	-.3505E+01	-.1278E+03	.7857E+00	-.1595E+02	.3290E+00	.0000E+00
				PLATE 49			
GLoads	54	.4208E+01	.1368E+03	.6810E+01	.0000E+00	-.2215E+01	-.4556E+02
GLoads	55	.1176E+01	.1493E+03	.2943E+01	.1384E+02	.7262E+00	.0000E+00
GLoads	71	-.1090E+01	-.1354E+03	.7744E+01	.1357E+02	.3270E+01	.0000E+00
GLoads	70	-.4294E+01	-.1506E+03	-.1750E+02	.0000E+00	-.4512E+00	-.4548E+02
				PLATE 50			
GLoads	55	-.1043E+01	.1349E+03	.7371E+01	-.1079E+02	-.9282E+00	.0000E+00
GLoads	56	-.4105E+00	.1459E+03	.1251E+00	-.4189E+01	.9418E+00	.0000E+00
GLoads	72	.9038E-01	-.1353E+03	.2492E+00	-.5832E+01	-.1646E+01	.0000E+00
GLoads	71	.1363E+01	-.1456E+03	-.7745E+01	-.1117E+02	-.3330E+01	.0000E+00
				PLATE 51			
GLoads	56	.2709E+00	.1377E+03	.8237E+01	.2449E+01	-.1175E+01	.0000E+00

========== I M A G E S 3 D ==========
= Copyright (c) 1984 Celestial Software Inc. =
==========

SOLVE PLATE LOADS/STRESSES Version 2.0 07/01/90

L

Load Case 2:GRAVITY LOAD

GLoads	Node	Fx	Fy	Fz	Mx	My	Mz
GLoads	57	.9948E-01	.1426E+03	-.4664E+01	.2570E+01	-.4072E-01	.0000E+00
GLoads	73	-.8671E-01	-.1375E+03	-.3695E+00	.2132E+01	.6572E+00	.0000E+00
GLoads	72	-.2837E+00	-.1428E+03	-.3203E+01	.9977E+00	.7570E+00	.0000E+00
				PLATE 52			
GLoads	57	-.3371E-01	.1405E+03	.5895E+01	-.3096E+00	.3205E+00	.0000E+00
GLoads	58	-.2123E+00	.1352E+03	-.8776E+01	-.2167E+01	.4650E+00	.0000E+00
GLoads	74	.1803E+00	-.1392E+03	.1275E+01	-.2448E+01	-.1211E+00	.0000E+00
GLoads	73	.6572E-01	-.1364E+03	.1607E+01	-.4881E+00	-.1161E+01	.0000E+00
				PLATE 53			
GLoads	58	.2107E+00	.1366E+03	.2881E+01	.2319E+01	-.3674E+00	.0000E+00
GLoads	59	.8694E+00	.1277E+03	-.7252E+01	.9912E+01	.4492E+00	.0000E+00
GLoads	75	-.9038E+00	-.1339E+03	.1909E+01	.9553E+01	-.2003E-01	.0000E+00
GLoads	74	-.1764E+00	-.1304E+03	.2462E+01	.1980E+01	-.5939E+00	.0000E+00
				PLATE 54			
GLoads	59	-.8891E+00	.1300E+03	-.1644E+01	-.9131E+01	-.4021E+00	.0000E+00
GLoads	60	-.3193E+01	.1273E+03	.1176E+00	.0000E+00	.1244E+01	.3508E+02
GLoads	76	.3259E+01	-.1295E+03	.7800E+01	.0000E+00	.8722E+00	.3586E+02
GLoads	75	.8236E+00	-.1279E+03	-.6273E+01	-.9741E+01	-.6991E+00	.0000E+00
				PLATE 55			
GLoads	60	-.6453E+01	.1189E+03	-.3704E+01	-.4263E+02	-.3787E+01	.0000E+00
GLoads	61	-.3179E+01	.1346E+03	-.1022E+01	-.8893E+01	.1404E+01	.0000E+00
GLoads	77	.5265E+01	-.1206E+03	.1067E+01	-.8645E+01	.4035E+01	.0000E+00
GLoads	76	.4367E+01	-.1329E+03	.3659E+01	-.4379E+02	-.9701E+00	.0000E+00
				PLATE 56			
GLoads	61	-.1133E+02	.1188E+03	.1223E+01	.1209E+02	-.1361E+01	.0000E+00
GLoads	62	-.5467E+01	.1446E+03	.6776E-01	.1402E+01	.1060E+01	.0000E+00
GLoads	78	.4836E+01	-.1202E+03	-.4934E+00	.1798E+01	-.1900E+01	.0000E+00
GLoads	77	.1196E+02	-.1432E+03	-.7976E+00	.1312E+02	-.4254E+01	.0000E+00
				PLATE 57			
GLoads	62	-.1037E+02	.1268E+03	-.2233E+00	-.5938E+01	-.1284E+01	.0000E+00
GLoads	63	-.1621E+01	.1462E+03	-.1204E+00	-.3608E+00	-.1081E+01	.0000E+00
GLoads	79	.2638E+01	-.1288E+03	-.4570E-02	.3303E+01	.9976E-01	.0000E+00
GLoads	78	.9356E+01	-.1442E+03	.3484E+00	-.4567E+01	.3689E+00	.0000E+00
				PLATE 58			
GLoads	63	-.7047E+01	.1384E+03	.2386E+00	-.8309E+00	.9419E+00	.0000E+00
GLoads	64	.3660E+01	.1449E+03	-.2525E+00	-.4840E+01	-.9357E+00	.0000E+00
GLoads	80	.2934E+00	-.1400E+03	-.3394E-01	.1232E+01	-.2850E+01	.0000E+00
GLoads	79	.3094E+01	-.1433E+03	.4786E-01	.4133E+01	-.1501E+01	.0000E+00
				PLATE 59			
GLoads	64	-.6247E+01	.1463E+03	.3313E+00	-.3839E+01	.3056E+00	.0000E+00
GLoads	65	.8950E+01	.1432E+03	.1275E+00	.3197E+00	-.6902E+01	.0000E+00
GLoads	81	.6688E+00	-.1471E+03	-.5816E+00	.9734E+01	-.2233E+01	.0000E+00

========== I M A G E S 3 D ==========
= Copyright (c) 1984 Celestial Software Inc. =
==========

SOLVE PLATE LOADS/STRESSES Version 2.0 07/01/90

L

Load Case 2:GRAVITY LOAD

GLoads	Node	Fx	Fy	Fz	Mx	My	Mz
GLoads	80	-.3372E+01	-.1424E+03	.1228E+00	.3879E+01	.1942E+01	.0000E+00
				PLATE 60			
GLoads	65	-.5886E+01	.1468E+03	.3444E+00	.6901E-01	.6078E+01	.0000E+00
GLoads	66	.9071E+01	.1409E+03	-.4418E-01	-.6310E+01	-.4927E+01	.0000E+00
GLoads	82	.2629E+01	-.1455E+03	-.5215E+00	.2060E+01	-.1225E+02	.0000E+00
GLoads	81	-.5814E+01	-.1421E+03	.2213E+00	.1079E+02	.2521E+01	.0000E+00
				PLATE 61			
GLoads	67	-.5400E+01	.7435E+02	.4224E-01	.7428E+01	.8711E+01	.0000E+00
GLoads	68	.4728E+01	.7407E+02	.1102E+01	.4833E+01	.5804E+00	.0000E+00
GLoads	84	-.8437E+00	-.7272E+02	.2923E+00	.7977E+01	-.4132E+00	.0000E+00
GLoads	83	.1516E+01	-.7570E+02	-.1436E+01	.1122E+02	.1018E+02	.0000E+00
				PLATE 62			
GLoads	68	.5652E+01	.7776E+02	-.1010E+01	-.1097E+02	.1252E+01	.0000E+00
GLoads	69	-.1011E+01	.6750E+02	-.1400E+01	-.2383E+02	.2554E+01	.0000E+00
GLoads	85	-.2522E+02	-.7684E+02	.2866E+01	-.2180E+02	.1032E+02	.0000E+00
GLoads	84	.2058E+02	-.6842E+02	-.4573E+00	-.9647E+01	.5925E+01	.0000E+00
				PLATE 63			
GLoads	69	.1463E+02	.1009E+03	.1772E+01	.2837E+02	-.1523E+01	.0000E+00
GLoads	70	.6132E+01	.6654E+02	.7043E+01	.9087E+02	.5014E+01	.0000E+00
GLoads	86	-.5073E+02	-.1083E+03	-.7314E+01	.9329E+02	.1754E+00	.0000E+00
GLoads	85	.2998E+02	-.5914E+02	-.1500E+01	.2987E+02	-.7381E+01	.0000E+00
				PLATE 64			
GLoads	70	-.4213E+01	.1029E+03	.4623E+01	.0000E+00	-.3982E+01	.5898E+02
GLoads	71	-.1519E+01	.8768E+02	-.1102E+02	-.1792E+02	.7318E+00	.0000E+00
GLoads	87	.4556E+00	-.9904E+02	-.2100E+02	-.1977E+02	-.5299E+01	.0000E+00
GLoads	86	.5277E+01	-.9154E+02	.2740E+02	.0000E+00	-.7937E+01	.6097E+02
				PLATE 65			
GLoads	71	.1246E+01	.8476E+02	.1102E+02	.1551E+02	-.6714E+00	.0000E+00
GLoads	72	.4399E+00	.8835E+02	-.7301E+01	.7353E+01	-.5829E+00	.0000E+00
GLoads	88	.1063E+00	-.8174E+02	-.6034E+01	.8755E+01	.4110E+01	.0000E+00
GLoads	87	-.1792E+01	-.9137E+02	.2311E+01	.1475E+02	.5610E+01	.0000E+00
				PLATE 66			
GLoads	72	-.2466E+00	.8113E+02	.1026E+02	-.2519E+01	.1471E+01	.0000E+00
GLoads	73	-.6362E-01	.8017E+02	-.1019E+02	-.2637E+01	.9412E+00	.0000E+00
GLoads	89	.7354E-01	-.8006E+02	-.4141E+00	-.2224E+01	-.3002E+00	.0000E+00
GLoads	88	.2367E+00	-.8125E+02	.3491E+00	-.1151E+01	-.1959E+01	.0000E+00
				PLATE 67			
GLoads	73	.8461E-01	.8518E+02	.8952E+01	.9928E+00	-.4378E+00	.0000E+00
GLoads	74	.4571E+00	.7396E+02	-.1560E+02	.6320E+01	.5207E+00	.0000E+00
GLoads	90	-.2828E+00	-.8576E+02	.1016E+01	.6323E+01	.1179E+01	.0000E+00
GLoads	89	-.2589E+00	-.7338E+02	.5636E+01	.1261E+01	.1440E+01	.0000E+00
				PLATE 68			
GLoads	74	-.4610E+00	.8710E+02	.1187E+02	-.5852E+01	.1943E+00	.0000E+00

========== I M A G E S 3 D ==========
= Copyright (c) 1984 Celestial Software Inc. =
==========

SOLVE PLATE LOADS/STRESSES Version 2.0 07/01/90

L

Load Case 2:GRAVITY LOAD

GLoads	Node	Fx	Fy	Fz	Mx	My	Mz
GLoads	75	-.1602E+01	.7680E+02	-.1856E+02	-.2244E+02	.8166E+00	.0000E+00
GLoads	91	.1815E+01	-.8867E+02	-.6020E+01	-.2249E+02	.1622E+01	.0000E+00
GLoads	90	.2487E+00	-.7523E+02	.1271E+02	-.5955E+01	.6568E+00	.0000E+00
				PLATE 69			
GLoads	75	.1682E+01	.7636E+02	.2292E+02	.2263E+02	-.9745E-01	.0000E+00
GLoads	76	.6265E+01	.8543E+02	-.1738E+02	.0000E+00	.7131E+00	-.8607E+02
GLoads	92	-.6257E+01	-.7560E+02	-.3412E+02	.0000E+00	-.1185E+00	-.8711E+02
GLoads	91	-.1691E+01	-.8619E+02	.2858E+02	.2276E+02	-.3684E+00	.0000E+00
				PLATE 70			
GLoads	76	-.1662E+02	.6140E+02	.4605E+01	.5946E+02	-.3936E+01	.0000E+00
GLoads	77	-.4078E+01	.9628E+02	.7336E+00	.1476E+02	.1245E+01	.0000E+00
GLoads	93	-.2248E+01	-.5875E+02	-.2256E+01	.1325E+02	-.8367E+01	.0000E+00
GLoads	92	.2295E+02	-.9893E+02	-.3083E+01	.5934E+02	-.1203E+02	.0000E+00
				PLATE 71			
GLoads	77	-.1315E+02	.6134E+02	-.1003E+01	-.1923E+02	-.1026E+01	.0000E+00
GLoads	78	-.1879E+01	.8912E+02	-.3310E+00	-.1553E+00	-.5301E+00	.0000E+00
GLoads	94	.6340E+00	-.6187E+02	.4430E+00	.2333E+01	.3686E+00	.0000E+00
GLoads	93	.1439E+02	-.8859E+02	.8909E+00	-.1963E+02	.2887E+01	.0000E+00
				PLATE 72			
GLoads	78	-.1231E+02	.6910E+02	.4760E+00	.2925E+01	.2061E+01	.0000E+00
GLoads	79	.4251E+01	.8472E+02	-.5241E-01	.4845E-02	.1458E+01	.0000E+00
GLoads	95	.2039E+01	-.7010E+02	-.2983E+00	.2998E+01	-.4493E+01	.0000E+00
GLoads	94	.6023E+01	-.8371E+02	-.1253E+00	.5723E+01	-.4346E+01	.0000E+00
				PLATE 73			
GLoads	79	-.9983E+01	.8111E+02	.9119E-02	-.7440E+01	-.5679E-01	.0000E+00
GLoads	80	.1139E+02	.8021E+02	-.6996E-02	.3448E+01	-.5940E+00	.0000E+00
GLoads	96	-.2309E+01	-.8277E+02	-.1538E+00	.8228E+01	-.1235E+01	.0000E+00
GLoads	95	.9009E+00	-.7856E+02	.1517E+00	-.4178E+01	-.5525E+00	.0000E+00
				PLATE 74			
GLoads	80	-.8313E+01	.9596E+02	-.8185E-01	-.8559E+01	.1502E+01	.0000E+00
GLoads	81	.1952E+02	.7879E+02	-.1263E+01	-.1682E+02	-.5431E+00	.0000E+00
GLoads	97	-.4529E+01	-.9911E+02	.5543E+00	-.8647E+01	-.7068E+01	.0000E+00
GLoads	96	-.6677E+01	-.7564E+02	.7906E+00	-.2959E+01	-.4640E+01	.0000E+00
				PLATE 75			
GLoads	81	-.1437E+02	.1042E+03	.1623E+01	-.3702E+01	.2553E+00	.0000E+00
GLoads	82	.2552E+02	.8746E+02	.1175E+01	.2817E+02	-.1944E+02	.0000E+00
GLoads	98	.7015E+01	-.1077E+03	-.3444E+01	.4463E+02	-.1449E+02	.0000E+00
GLoads	97	-.1816E+02	-.8400E+02	.6455E+00	.7869E+01	-.7418E+00	.0000E+00
				PLATE 76			
GLoads	83	-.1310E+02	.2971E+02	-.1551E+00	-.2577E+01	.2151E+01	.0000E+00
GLoads	84	-.6218E+01	.4716E+02	-.3716E+01	-.3496E+02	-.4184E+01	.0000E+00
GLoads	100	.8044E+01	-.2384E+02	.3433E+01	-.3107E+02	-.2497E+01	.0000E+00

========== I M A G E S 3 D ==========
= Copyright (c) 1984 Celestial Software Inc. =
==========

SOLVE PLATE LOADS/STRESSES Version 2.0 07/01/90

L

Load Case 2:GRAVITY LOAD

GLoads	Node	Fx	Fy	Fz	Mx	My	Mz
GLoads	99	.1128E+02	-.5304E+02	.4378E+00	.4737E+01	.6655E+00	.0000E+00
				PLATE 77			
GLoads	84	-.1352E+02	.8886E+01	.3881E+01	.3663E+02	-.1328E+01	.0000E+00
GLoads	85	-.8880E+01	.3011E+02	.1617E+02	.1314E+03	.2810E+01	.0000E+00
GLoads	101	.2207E+02	-.3075E+01	-.1652E+02	.1270E+03	-.2250E+01	.0000E+00
GLoads	100	.3277E+00	-.3592E+02	-.3533E+01	.3582E+02	-.3992E+01	.0000E+00
				PLATE 78			
GLoads	85	.4122E+01	.2077E+02	-.1754E+02	-.1395E+03	-.5747E+01	.0000E+00
GLoads	86	-.6419E+01	.3450E+02	-.6283E+02	-.5119E+03	.2524E+01	.0000E+00
GLoads	102	.1617E+02	-.3172E+02	.6348E+02	-.5263E+03	.8798E+01	.0000E+00
GLoads	101	-.1387E+02	-.2355E+02	.1689E+02	-.1484E+03	.3331E+01	.0000E+00
				PLATE 79			
GLoads	86	.6819E+02	.2980E+02	.3367E+02	.0000E+00	.2831E+00	-.5561E+03
GLoads	87	.1898E+02	.6419E+02	.4626E+00	.1525E+03	-.2694E+01	.0000E+00
GLoads	103	-.1834E+02	-.2785E+02	-.1050E+02	.0000E+00	.4961E+01	-.1615E+03
GLoads	102	-.6883E+02	-.6614E+02	-.2363E+02	.0000E+00	.7313E+01	-.5682E+03
				PLATE 80			
GLoads	87	-.1764E+02	.2972E+02	.1823E+02	-.1475E+03	.2383E+01	.0000E+00
GLoads	88	-.4906E+01	.3918E+02	-.3950E+01	-.4361E+02	.6486E-01	.0000E+00
GLoads	104	.4493E+01	-.2398E+02	-.1317E+02	.0000E+00	-.4854E+01	.3965E+02
GLoads	103	.1805E+02	-.4492E+02	-.1111E+01	.0000E+00	-.4002E+01	.1413E+03
				PLATE 81			
GLoads	88	.4563E+01	.2731E+02	.9635E+01	.3600E+02	-.2216E+01	.0000E+00
GLoads	89	.1316E+01	.2593E+02	-.1172E+02	.1092E+02	-.9210E+00	.0000E+00
GLoads	105	-.1517E+01	-.2815E+02	-.8733E+01	.0000E+00	.2548E+00	-.1219E+02
GLoads	104	-.4362E+01	-.2509E+02	.1082E+02	.0000E+00	-.2341E+00	-.3789E+02
				PLATE 82			
GLoads	89	-.1130E+01	.3101E+02	.6497E+01	-.9961E+01	-.2184E+00	.0000E+00
GLoads	90	-.8828E+00	.2348E+02	-.1286E+02	-.7569E+01	-.9321E+00	.0000E+00
GLoads	106	.5531E+00	-.3025E+02	-.4058E+01	.0000E+00	-.2128E+01	.6869E+01
GLoads	105	.1460E+01	-.2424E+02	.1042E+02	.0000E+00	-.1832E+01	.8817E+01
				PLATE 83			
GLoads	90	.9168E+00	.4101E+02	-.8678E+00	.7201E+01	-.9036E+00	.0000E+00
GLoads	91	.2149E+01	.2367E+02	-.1859E+02	.1844E+02	-.4328E+00	.0000E+00
GLoads	107	-.2513E+01	-.4439E+02	.9961E+01	.0000E+00	-.2236E+01	-.1776E+02
GLoads	106	-.5526E+00	-.2030E+02	.9496E+01	.0000E+00	-.2073E+01	-.7186E+01
				PLATE 84			
GLoads	91	-.2273E+01	.5469E+02	-.3972E+01	-.1871E+02	-.8212E+00	.0000E+00
GLoads	92	-.8388E+01	.1604E+02	-.3024E+02	.0000E+00	-.2102E+00	.6645E+02
GLoads	108	.8121E+01	-.5245E+02	.3091E+02	.0000E+00	-.1592E+01	.7015E+02
GLoads	107	.2540E+01	-.1827E+02	.3294E+01	.0000E+00	-.1512E+01	.2060E+02
				PLATE 85			
GLoads	92	-.3259E+01	.2401E+02	.5487E+02	.4490E+03	.1404E+01	.0000E+00

KAISER ENGINEERS HANFORD S/N:801854 02/22/95
PAGE 101 Run ID=MN61973 08:50:33

```
============== I M A G E S  3 D ==============
= Copyright (c) 1984   Celestial Software Inc. =
===============================================
```

SOLVE PLATE LOADS/STRESSES Version 2.0 07/01/90

L

Load Case 2:GRAVITY LOAD

GLoads	Node	Fx	Fy	Fz	Mx	My	Mz
GLoads	93	-.5638E+01	.3111E+02	.1558E+02	.1255E+03	-.5016E+00	.0000E+00
GLoads	109	.4214E+01	-.2144E+02	-.1413E+02	.1320E+03	.8675E+01	.0000E+00
GLoads	108	.4682E+01	-.3369E+02	-.5632E+02	.4558E+03	.1238E+02	.0000E+00
				PLATE 86			
GLoads	93	-.6507E+01	.2179E+02	-.1421E+02	-.1192E+03	.5981E+01	.0000E+00
GLoads	94	.3159E+01	.2685E+02	-.3673E+01	-.3333E+02	.2345E+01	.0000E+00
GLoads	110	.6360E+01	-.2321E+02	.4071E+01	-.2915E+02	-.2535E+01	.0000E+00
GLoads	109	-.3013E+01	-.2543E+02	.1381E+02	-.1134E+03	.2398E+00	.0000E+00
				PLATE 87			
GLoads	94	-.9816E+01	.2431E+02	.3356E+01	.2528E+02	.1633E+01	.0000E+00
GLoads	95	.6400E+01	.2853E+02	.9407E+00	.8066E+01	.1605E+01	.0000E+00
GLoads	111	.8806E+01	-.2481E+02	-.3560E+00	.9873E+01	.2441E+01	.0000E+00
GLoads	110	-.5390E+01	-.2802E+02	-.3940E+01	.2768E+02	.3189E+01	.0000E+00
				PLATE 88			
GLoads	95	-.9340E+01	.2570E+02	-.7941E+00	-.6886E+01	.3441E+01	.0000E+00
GLoads	96	.8735E+01	.2554E+02	.7396E+00	.5943E+01	.3938E+01	.0000E+00
GLoads	112	.8751E+01	-.2488E+02	-.2207E+00	.6004E+01	.3315E+00	.0000E+00
GLoads	111	-.8147E+01	-.2636E+02	.2752E+00	-.5960E+01	.1599E+00	.0000E+00
				PLATE 89			
GLoads	96	.2507E+00	.3844E+02	-.1376E+01	-.1121E+02	.1938E+01	.0000E+00
GLoads	97	.1463E+02	.2730E+02	-.3859E+01	-.2901E+02	.3659E+01	.0000E+00
GLoads	113	-.3789E+01	-.4349E+02	.4877E+01	-.3313E+02	.5898E+01	.0000E+00
GLoads	112	-.1109E+02	-.2225E+02	.3586E+00	-.1303E+02	.3943E+01	.0000E+00
				PLATE 90			
GLoads	97	.8061E+01	.6138E+02	.2660E+01	.2979E+02	.4151E+01	.0000E+00
GLoads	98	.1707E+02	.3919E+02	.1395E+02	.1171E+03	.7611E+01	.0000E+00
GLoads	114	-.2156E+02	-.6653E+02	-.1182E+02	.1052E+03	.1323E+02	.0000E+00
GLoads	113	-.3574E+01	-.3404E+02	-.4797E+01	.2195E+02	.7430E+01	.0000E+00
				PLATE 91			
GLoads	122	.1183E+03	.4229E+03	.6628E-01	.2668E+00	.8795E+00	.0000E+00
GLoads	2	-.5389E+02	.3413E+03	.1417E+00	.1913E+01	.7220E+00	.0000E+00
GLoads	19	-.7834E+02	-.4121E+03	-.7637E-01	.2007E+01	-.3356E+00	.0000E+00
GLoads	124	.1391E+02	-.3521E+03	-.1316E+00	.3876E+00	.4040E-01	.0000E+00
				PLATE 92			
GLoads	124	-.1176E+02	.2984E+03	.1184E+00	.7323E+00	.1015E+01	.0000E+00
GLoads	19	.6648E+01	.3123E+03	-.3003E-01	-.9710E-01	.2693E+00	.0000E+00
GLoads	35	.1785E+01	-.3067E+03	.1476E-01	.1157E+00	-.1322E+01	.0000E+00
GLoads	126	.3331E+01	-.3040E+03	-.1031E+00	.1194E+01	-.2679E+00	.0000E+00
				PLATE 93			
GLoads	126	-.4110E+01	.2399E+03	.1142E+00	.8961E+00	.1456E+01	.0000E+00
GLoads	35	.3462E+01	.2441E+03	.2625E+00	.2268E+01	-.4454E-01	.0000E+00
GLoads	51	-.2254E+01	-.2434E+03	-.4963E-01	.3120E+01	.6164E+00	.0000E+00

KAISER ENGINEERS HANFORD S/N:801854 02/22/95
PAGE 102 Run ID=MN61973 08:50:34

```
============== I M A G E S  3 D ==============
= Copyright (c) 1984   Celestial Software Inc. =
===============================================
```

SOLVE PLATE LOADS/STRESSES Version 2.0 07/01/90

L

Load Case 2:GRAVITY LOAD

GLoads	Node	Fx	Fy	Fz	Mx	My	Mz
GLoads	128	.2901E+01	-.2406E+03	-.3271E+00	.2003E+01	.2229E+01	.0000E+00
				PLATE 94			
GLoads	128	-.2737E+01	.1781E+03	.2961E+00	.3215E+01	.1946E+01	.0000E+00
GLoads	51	.5737E+01	.1759E+03	.1522E+00	-.2587E+00	-.3765E+00	.0000E+00
GLoads	67	-.5536E+01	-.1792E+03	-.1747E+00	.1359E+01	-.2456E+01	.0000E+00
GLoads	130	.2536E+01	-.1748E+03	-.2736E+00	.5547E+01	.4366E+00	.0000E+00
				PLATE 95			
GLoads	130	-.2576E+01	.1077E+03	.3411E+00	-.3426E+01	-.2525E+01	.0000E+00
GLoads	67	.1148E+02	.1006E+03	.1634E+00	.6425E+01	-.7121E+01	.0000E+00
GLoads	83	-.5056E+01	-.1129E+03	-.1182E+01	.1073E+02	-.7492E+01	.0000E+00
GLoads	132	-.3844E+01	-.9549E+02	.6780E+00	.1455E+00	-.3244E+01	.0000E+00
				PLATE 96			
GLoads	132	.3848E+01	.3983E+02	-.7096E+00	-.1141E+02	.2937E+01	.0000E+00
GLoads	83	.8634E+01	.4719E+02	.2420E+01	.1322E+02	-.9519E+00	.0000E+00
GLoads	99	-.1153E+02	-.5749E+02	-.1782E+01	.2545E+02	.4180E+01	.0000E+00
GLoads	134	-.9554E+00	-.2953E+02	.7167E-01	.9602E+00	.6593E+01	.0000E+00
				PLATE 97			
GLoads	17	.4450E+02	.3354E+03	.5200E+00	.4968E+01	-.5668E+00	.0000E+00
GLoads	123	-.1386E+03	.4550E+03	.5623E+00	.5571E+01	-.1153E+01	.0000E+00
GLoads	125	-.5622E+01	-.3515E+03	-.7021E+00	.6958E+01	-.9534E+00	.0000E+00
GLoads	34	.9970E+02	-.4389E+03	-.3801E+00	.6312E+01	-.1239E+00	.0000E+00
				PLATE 98			
GLoads	34	-.6332E+01	.3105E+03	.3332E+00	.2294E+01	.1120E+01	.0000E+00
GLoads	125	.3071E+01	.3049E+03	.6911E+00	.4931E+01	-.9721E+00	.0000E+00
GLoads	127	-.4057E+01	-.3013E+03	-.4659E+00	.9184E+01	.9129E+00	.0000E+00
GLoads	50	.7318E+01	-.3141E+03	-.5584E+00	.6124E+01	.3442E+01	.0000E+00
				PLATE 99			
GLoads	50	.3610E+01	.2516E+03	.8494E+00	.4143E+01	.7125E+00	.0000E+00
GLoads	127	.4880E+01	.2372E+03	.4871E+00	.3351E+01	-.3207E+01	.0000E+00
GLoads	129	-.7767E+01	-.2466E+03	-.1272E+01	.1077E+02	-.8649E+01	.0000E+00
GLoads	66	-.7231E+00	-.2423E+03	-.6482E-01	.1113E+02	-.4549E+01	.0000E+00
				PLATE 100			
GLoads	66	-.3854E+01	.1878E+03	.3727E-01	-.5187E+01	.4421E+01	.0000E+00
GLoads	129	.7534E+01	.1815E+03	.1186E+01	.8208E+01	-.1492E+01	.0000E+00
GLoads	131	-.2493E+01	-.1856E+03	.5954E-01	.1970E+02	.7456E+01	.0000E+00
GLoads	82	-.1188E+01	-.1838E+03	-.1283E+01	.4191E+01	.1453E+02	.0000E+00
				PLATE 101			
GLoads	82	-.1819E+02	.1122E+03	.3527E+00	.2362E+02	.2416E+02	.0000E+00
GLoads	131	.2925E+01	.1204E+03	.2569E+00	-.3077E+02	.1384E+02	.0000E+00
GLoads	133	.9280E+01	-.9938E+02	.2673E+01	-.1852E+02	.6240E+01	.0000E+00
GLoads	98	.5985E+01	-.1331E+03	-.3283E+01	.4244E+02	.1436E+02	.0000E+00
				PLATE 102			
GLoads	98	-.1669E+02	.4371E+02	.1596E+02	.1311E+03	-.1095E+02	.0000E+00

```
KAISER ENGINEERS HANFORD  S/N:801854                          02/22/95
PAGE  103                 Run ID=MN61973                      08:50:35
            =============== I M A G E S  3 D ===============
            = Copyright (c) 1984   Celestial Software Inc. =
            ================================================

          SOLVE PLATE LOADS/STRESSES   Version 2.0  07/01/90

      L

Load Case  2:GRAVITY LOAD

GLoads Node      Fx          Fy          Fz          Mx          My          Mz
------ ---- ---------- ---------- ---------- ---------- ---------- ----------
GLoads  133 -.1181E+02  .4590E+02 -.1618E+01 -.3916E+01 -.8508E+01  .0000E+00
GLoads  135  .5804E+01 -.2238E+02 -.1070E+01 -.8842E+01 -.1542E+02  .0000E+00
GLoads  114  .2270E+02 -.6722E+02 -.1327E+02  .1183E+03 -.1889E+02  .0000E+00
```

```
KAISER ENGINEERS HANFORD  S/N:801854                          02/22/95
PAGE  104                 Run ID=MN61973                      08:50:35
            =============== I M A G E S  3 D ===============
            = Copyright (c) 1984   Celestial Software Inc. =
            ================================================

          SOLVE PLATE LOADS/STRESSES   Version 2.0  07/01/90

      L

Load Case  2:GRAVITY LOAD

                MAXIMUM STRESS SUMMARY FOR PLATES
                WITHIN SPECIFIED RANGE    1-  102

        Maximum (absolute) Stress =  .3993E+02 at Plate   97

         Plate   Sigma  X   Sigma  Y    Tau XY    Von Mises
         -----  ---------- ---------- ---------- ----------
            97  -.6748E+01 -.3993E+02  .4940E+01  .3799E+02
```

KAISER ENGINEERS HANFORD S/N:801854 02/22/95
PAGE 105 Run ID=MN61973 08:50:35

========== I M A G E S 3 D ==========
= Copyright (c) 1984 Celestial Software Inc. =
==========

SOLVE REACTIONS Version 2.0 07/01/90

L

Load Case 2:GRAVITY LOAD

REACTIONS

Node	Fx	Fy	Fz	Mx	My	Mz
1	.1036E+00	.1225E+03	-.2811E+02	.0000E+00	.0000E+00	.0000E+00
2	.4483E+02	.7912E+03	.7240E-01	.0000E+00	.6225E+01	-.6387E+01
3	-.2724E+01	.5205E+03	-.1338E+00	.0000E+00	.1179E+01	.0000E+00
4	-.2607E+02	.5287E+03	-.3428E-01	.0000E+00	.1427E+01	.0000E+00
5	-.1072E+03	.8095E+03	-.1202E+03	-.6157E+02	.3311E+01	.8070E+02
6	-.2465E+00	.5931E+03	-.5761E+02	.0000E+00	.8228E-01	.0000E+00
7	-.6879E-01	.5831E+03	-.2880E+02	.0000E+00	-.1432E+00	.0000E+00
8	-.8635E-01	.5830E+03	.1586E+01	.0000E+00	-.4329E+00	.0000E+00
9	.4517E-02	.5767E+03	.3100E+02	.0000E+00	-.4699E+00	.0000E+00
10	.8825E-01	.5849E+03	.5427E+02	.0000E+00	-.7242E+00	.0000E+00
11	.1289E+03	.9182E+03	.1237E+03	.1173E+03	-.1045E+02	-.1833E+03
12	.5488E+02	.5763E+03	-.5215E-01	.0000E+00	-.1021E+01	.0000E+00
13	.3537E+02	.5704E+03	.1151E+00	.0000E+00	-.1631E+01	.0000E+00
14	.1061E+02	.5801E+03	-.8346E-01	.0000E+00	-.1782E+01	.0000E+00
15	-.1116E+02	.5868E+03	.2559E+00	.0000E+00	-.1831E+01	.0000E+00
16	-.3494E+02	.5918E+03	-.1038E+00	.0000E+00	-.1397E+01	.0000E+00
17	-.7774E+02	.8418E+03	.7507E+00	.0000E+00	-.4658E+01	.1243E+02
18	-.2438E+00	.1062E+03	.1867E+02	.0000E+00	.0000E+00	.0000E+00
115	.8533E-01	.0000E+00	.1454E+02	.0000E+00	.0000E+00	.0000E+00
116	.8979E+03	.9185E+04	-.2179E+01	.0000E+00	.0000E+00	.0000E+00
117	.1281E+01	.9184E+04	.8930E+03	.0000E+00	.0000E+00	.0000E+00
118	-.8943E+03	.9185E+04	-.2074E+01	.0000E+00	.0000E+00	.0000E+00
119	.1177E+01	.9186E+04	-.8992E+03	.0000E+00	.0000E+00	.0000E+00
122	.1198E+03	.6018E+03	.6912E-01	.0000E+00	.4903E+01	-.2064E+02
123	-.1404E+03	.6407E+03	.5999E+00	.0000E+00	-.3633E+01	.2622E+02

KAISER ENGINEERS HANFORD S/N:801854 02/22/95
PAGE 106 Run ID=MN61973 08:50:36

========== I M A G E S 3 D ==========
= Copyright (c) 1984 Celestial Software Inc. =
==========

SOLVE BEAM LOADS/STRESSES Version 2.0 07/01/90

L

Load Case 3:UBC SEISMIC LOAD - SN & WE DIR.

BEAM LOADS AND/OR STRESSES

GLoads Node LLoads Node Stress Node Stress Node	Fx Axial Axial Maximum	Fy Y-Shear Y-Shear Minimum	Fz Z-Shear Z-Shear Cmb. Shear	Mx Torsion Torsion	My Y-Bending Y-Bending	Mz Z-Bending Z-Bending
			BEAM NO. 1			
GLoads 1	.2212E+02	-.7145E+02	.8077E+02	.2274E-12	-.5684E-13	.0000E+00
GLoads 99	.3236E+02	.2167E+03	-.2629E+02	-.8595E+03	.2815E+03	.6756E+03
LLoads 1	-.9702E+02	-.4707E+02	-.2212E+02	-.5247E-13	.2186E-13	-.2274E-12
LLoads 99	.2102E+03	-.5910E+02	-.3236E+02	-.1749E-13	-.7319E+03	.8595E+03
			BEAM NO. 2			
GLoads 18	.1903E+02	-.4880E+01	.3094E+01	.2842E-13	-.2842E-13	.0000E+00
GLoads 114	.3423E+02	.1469E+03	.5016E+02	.3844E+03	-.3496E+03	.1003E+04
LLoads 18	-.3589E+01	.4528E+01	.1903E+02	-.2684E-13	.9353E-14	.2842E-13
LLoads 114	.1552E+03	-.9719E+00	.3423E+02	-.1782E-13	.1062E+04	.3844E+03
			BEAM NO. 3			
GLoads 99	.1512E+03	.7599E+02	-.2530E+03	.2381E+04	-.1215E+04	.9061E+03
GLoads 108	-.1125E+03	.2727E+02	.2917E+03	-.1149E+03	.1214E+03	.9278E+02
LLoads 99	.2925E+03	-.7599E+02	-.3629E+02	.1312E+03	.1215E+04	-.2544E+04
LLoads 108	-.3123E+03	-.2727E+02	-.1477E+02	-.1312E+03	-.1214E+03	.6768E+02
			BEAM NO. 4			
GLoads 114	-.1975E+03	.6055E+02	.2493E+03	-.6310E+03	.3777E+03	-.7221E+03
GLoads 102	.2470E+03	.7164E+02	-.1998E+03	.1147E+04	-.6123E+03	.1227E+04
LLoads 114	.3163E+03	-.6055E+02	.3325E+02	-.7481E+02	-.3777E+03	-.9560E+03
LLoads 102	-.3156E+03	-.7164E+02	.3685E+02	.7481E+02	.6123E+03	.1678E+04
			BEAM NO. 5			
GLoads 98	.8129E+03	.2851E+02	-.9113E+03	.5167E+03	-.4105E+03	.2226E+03
GLoads 115	-.7765E+03	.6869E+02	.9477E+03	.9300E+03	-.9310E+03	.1043E+04
LLoads 98	-.1221E+04	-.2851E+02	.1169E+02	-.1727E+03	.4105E+03	.5355E+03
LLoads 115	.1225E+04	-.6869E+02	.3974E+02	.1727E+03	.9310E+03	.1387E+04
			BEAM NO. 6			
GLoads 92	-.2318E+03	.3962E+02	-.6277E+03	-.5236E+03	.2817E+03	.2147E+03
GLoads 115	.2612E+03	.3887E+02	.6572E+03	.4964E+03	-.4358E+02	-.2041E+03
LLoads 92	-.6691E+03	-.3962E+02	.1146E+02	.1036E+02	-.2817E+03	-.5658E+03
LLoads 115	.7072E+03	-.3887E+02	.5300E+01	-.1036E+02	.4358E+02	.5366E+03
			BEAM NO. 7			
GLoads 86	-.5522E+03	.5730E+02	.3683E+03	.4341E+03	.7685E+03	.7164E+03
GLoads 115	.5655E+03	-.2174E+02	-.3549E+03	.3958E+03	.8433E+03	.3902E+03
LLoads 86	-.6627E+03	-.5730E+02	.3672E+02	-.8255E+02	-.7685E+03	-.8336E+03
LLoads 115	.6654E+03	.2174E+02	-.5538E+02	.8255E+02	.8433E+03	-.5496E+03
			BEAM NO. 8			
GLoads 134	.1904E+02	-.1248E+02	-.5462E+01	.5965E+03	-.7744E+03	.1990E-12

```
============== I M A G E S  3 D ==============
= Copyright (c) 1984   Celestial Software Inc. =
===============================================

SOLVE BEAM LOADS/STRESSES    Version 2.0  07/01/90

L

Load Case  3:UBC SEISMIC LOAD - SN & WE DIR.

GLoads Node      Fx        Fy        Fz        Mx        My        Mz
LLoads Node    Axial     Y-Shear   Z-Shear   Torsion   Y-Bending Z-Bending
Stress Node    Axial     Y-Shear   Z-Shear   Torsion   Y-Bending Z-Bending
Stress Node  Maximum   Minimum  Cmb. Shear
------ ---- ---------- ---------- ---------- ---------- ---------- ----------
GLoads   99 -.1142E+02  .3280E+02  .1308E+02 -.5965E+03  .9598E+03 -.4528E+03
LLoads  134  .1904E+02  .1248E+02  .5462E+01  .5965E+03  .7744E+03 -.1990E-12
LLoads   99 -.1142E+02 -.3280E+02 -.1308E+02 -.5965E+03 -.9598E+03  .4528E+03
                         ***BEAM  NO.   9***
GLoads  135 -.5030E+02  .1670E+02  .7615E+01  .6230E+03  .5619E+03 -.4890E+02
GLoads  114  .5792E+02  .3619E+01  .5043E-02 -.6230E+03 -.4858E+03 -.8191E+02
LLoads  135  .5030E+02 -.1670E+02  .7615E+01 -.6230E+03 -.5619E+03 -.4890E+02
LLoads  114 -.5792E+02 -.3619E+01  .5043E-02  .6230E+03  .4858E+03 -.8191E+02
                         ***BEAM  NO.  10***
GLoads  122  .1141E+02  .5207E+03  .8656E+01 -.5678E+03  .6328E+03 -.1521E+03
GLoads  124 -.3028E+01 -.4984E+03 -.2739E+00  .6660E+03 -.6328E+03 -.6683E+01
LLoads  122  .5207E+03  .1141E+02 -.8656E+01  .6328E+03 -.5678E+03  .1521E+03
LLoads  124 -.4984E+03 -.3028E+01  .2739E+00 -.6328E+03  .6660E+03  .6683E+01
                         ***BEAM  NO.  11***
GLoads  124  .2311E+01  .3624E+03  .6855E+01 -.1529E+04  .5086E+03  .6683E+01
GLoads  126  .6071E+01 -.3400E+03  .1527E+01  .1588E+04 -.5086E+03  .3467E+02
LLoads  124  .3624E+03  .2311E+01 -.6855E+01  .5086E+03 -.1529E+04 -.6683E+01
LLoads  126 -.3400E+03  .6071E+01 -.1527E+01 -.5086E+03  .1588E+04 -.3467E+02
                         ***BEAM  NO.  12***
GLoads  126  .5075E+01  .2528E+03  .4898E+01 -.1934E+04  .2963E+03 -.3467E+02
GLoads  128  .3307E+01 -.2304E+03  .3483E+01  .1950E+04 -.2963E+03  .1523E+02
LLoads  126  .2528E+03  .5075E+01 -.4898E+01  .2963E+03 -.1934E+04  .3467E+02
LLoads  128 -.2304E+03  .3307E+01 -.3483E+01 -.2963E+03  .1950E+04 -.1523E+02
                         ***BEAM  NO.  13***
GLoads  128  .3612E+01  .1674E+03  .2810E+01 -.1821E+04  .8524E+02 -.1523E+02
GLoads  130  .4770E+01 -.1451E+03  .5572E+01  .1790E+04 -.8524E+02  .2796E+02
LLoads  128  .1674E+03  .3612E+01 -.2810E+01  .8524E+02 -.1821E+04  .1523E+02
LLoads  130 -.1451E+03  .4770E+01 -.5572E+01 -.8524E+02  .1790E+04 -.2796E+02
                         ***BEAM  NO.  14***
GLoads  130  .6255E+01  .9005E+02  .3239E+01 -.1073E+04 -.5711E+02 -.2796E+02
GLoads  132  .4222E+01 -.6211E+02  .7238E+01  .1018E+04  .5711E+02  .5151E-12
LLoads  130  .9005E+02  .6255E+01 -.3239E+01 -.5711E+02 -.1073E+04  .2796E+02
LLoads  132 -.6211E+02  .4222E+01 -.7238E+01  .5711E+02  .1018E+04 -.5151E-12
                         ***TRUSS NO.  15***
GLoads  132  .0000E+00 -.2710E+00  .0000E+00  .0000E+00  .0000E+00  .0000E+00
GLoads  134  .0000E+00  .2710E+00  .0000E+00  .0000E+00  .0000E+00  .0000E+00
LLoads  132 -.2710E+00  .0000E+00  .0000E+00  .0000E+00  .0000E+00  .0000E+00
LLoads  134  .2710E+00  .0000E+00  .0000E+00  .0000E+00  .0000E+00  .0000E+00
                         ***BEAM  NO.  16***
GLoads  123  .7586E+01 -.1259E+03  .8716E+01 -.8523E+03  .2629E+03 -.8598E+02
```



```
============== I M A G E S  3 D ==============
= Copyright (c) 1984   Celestial Software Inc. =
===============================================

SOLVE BEAM LOADS/STRESSES    Version 2.0  07/01/90

L

Load Case  3:UBC SEISMIC LOAD - SN & WE DIR.

GLoads Node      Fx        Fy        Fz        Mx        My        Mz
LLoads Node    Axial     Y-Shear   Z-Shear   Torsion   Y-Bending Z-Bending
Stress Node    Axial     Y-Shear   Z-Shear   Torsion   Y-Bending Z-Bending
Stress Node  Maximum   Minimum  Cmb. Shear
------ ---- ---------- ---------- ---------- ---------- ---------- ----------
GLoads  125  .7954E+00  .1482E+03 -.3345E+00  .9518E+03 -.2629E+03  .1128E+02
LLoads  123 -.1259E+03 -.7586E+01  .8716E+01  .2629E+03  .8523E+03 -.8598E+02
LLoads  125  .1482E+03 -.7954E+00 -.3345E+00 -.2629E+03 -.9518E+03  .1128E+02
                         ***BEAM  NO.  17***
GLoads    2  .8075E+01  .2358E+03  .5467E+01 -.4989E+03  .8043E+03 -.1100E+03
GLoads   19  .3070E+00 -.2134E+03  .2915E+01  .5270E+03 -.8043E+03  .2456E+02
LLoads    2  .2358E+03  .8075E+01 -.5467E+01  .8043E+03 -.4989E+03  .1100E+03
LLoads   19 -.2134E+03  .3070E+00 -.2915E+01 -.8043E+03  .5270E+03 -.2456E+02
                         ***BEAM  NO.  18***
GLoads   19  .4222E+01  .2261E+03  .4502E+01 -.1221E+04  .6285E+03 -.2456E+02
GLoads   35  .4160E+01 -.2038E+03  .3879E+01  .1228E+04 -.6285E+03  .2387E+02
LLoads   19  .2261E+03  .4222E+01 -.4502E+01  .6285E+03 -.1221E+04  .2456E+02
LLoads   35 -.2038E+03  .4160E+01 -.3879E+01 -.6285E+03  .1228E+04 -.2387E+02
                         ***BEAM  NO.  19***
GLoads   35  .4287E+01  .1665E+03  .4113E+01 -.1452E+04  .2775E+03 -.2387E+02
GLoads   51  .4095E+01 -.1442E+03  .4268E+01  .1451E+04 -.2775E+03  .2176E+02
LLoads   35  .1665E+03  .4287E+01 -.4113E+01  .2775E+03 -.1452E+04  .2387E+02
LLoads   51 -.1442E+03  .4095E+01 -.4268E+01 -.2775E+03  .1451E+04 -.2176E+02
                         ***BEAM  NO.  20***
GLoads   51  .5011E+01  .1208E+03  .4088E+01 -.1410E+04 -.1222E+03 -.2176E+02
GLoads   67  .3370E+01 -.9845E+02  .4293E+01  .1408E+04  .1222E+03  .3708E+01
LLoads   51  .1208E+03  .5011E+01 -.4088E+01 -.1222E+03 -.1410E+04  .2176E+02
LLoads   67 -.9845E+02  .3370E+01 -.4293E+01  .1222E+03  .1408E+04 -.3708E+01
                         ***BEAM  NO.  21***
GLoads   67  .2057E+01  .9298E+02  .4204E+01 -.8203E+03 -.4452E+03 -.3708E+01
GLoads   83  .8421E+01 -.6504E+02  .6273E+01  .7918E+03  .4452E+03  .9122E+02
LLoads   67  .9298E+02  .2057E+01 -.4204E+01 -.4452E+03 -.8203E+03  .3708E+01
LLoads   83 -.6504E+02  .8421E+01 -.6273E+01  .4452E+03  .7918E+03 -.9122E+02
                         ***BEAM  NO.  22***
GLoads   83  .4094E+02  .7743E+02 -.2498E+01  .4481E+03 -.5324E+03 -.9122E+02
GLoads   99 -.3465E+02 -.6066E+02  .8784E+01 -.5412E+03  .5324E+03 -.5324E+03
LLoads   83  .7743E+02  .4094E+02  .2498E+01 -.5324E+03  .4481E+03  .9122E+02
LLoads   99 -.6066E+02 -.3465E+02 -.8784E+01  .5324E+03 -.5412E+03  .5324E+03
                         ***BEAM  NO.  23***
GLoads    5  .5073E+01 -.2300E+03  .5524E+01  .8900E+02  .1334E+03 -.9378E+02
GLoads   22  .3308E+01  .2523E+03  .2858E+01 -.5968E+02 -.1334E+03  .7437E+02
LLoads    5 -.2300E+03 -.5073E+01  .5524E+01  .1334E+03 -.8900E+02 -.9378E+02
LLoads   22  .2523E+03 -.3308E+01  .2858E+01 -.1334E+03  .5968E+02  .7437E+02
                         ***BEAM  NO.  24***
GLoads   22  .3400E+01 -.1028E+03  .2190E+01 -.3128E+02  .1032E+03  .1786E+02
```

========== I M A G E S 3 D ==========
= Copyright (c) 1984 Celestial Software Inc. =
==========

SOLVE BEAM LOADS/STRESSES Version 2.0 07/01/90

L

Load Case 3:UBC SEISMIC LOAD - SN & WE DIR.

GLoads Node LLoads Node Stress Node Stress Node	Fx Axial Axial Maximum	Fy Y-Shear Y-Shear Minimum	Fz Z-Shear Z-Shear Cmb. Shear	Mx Torsion Torsion	My Y-Bending Y-Bending	Mz Z-Bending Z-Bending
GLoads 38	.4982E+01	.1252E+03	.6192E+01	-.1273E+02	-.1032E+03	-.4604E+00
LLoads 22	-.1028E+03	-.3400E+01	.2190E+01	.1032E+03	.3128E+02	.1786E+02
LLoads 38	.1252E+03	-.4982E+01	.6192E+01	-.1032E+03	.1273E+02	-.4604E+00
			BEAM NO. 25			
GLoads 38	.4051E+01	-.3054E+02	.5079E+01	.3986E+02	-.1939E+01	-.5628E+02
GLoads 54	.4330E+01	.5289E+02	.3303E+01	-.2032E+02	.1939E+01	.5935E+02
LLoads 38	-.3054E+02	-.4051E+01	.5079E+01	-.1939E+01	-.3986E+02	-.5628E+02
LLoads 54	.5289E+02	-.4330E+01	.3303E+01	.1939E+01	.2032E+02	.5935E+02
			BEAM NO. 26			
GLoads 54	.5074E+01	.1477E+02	.3725E+01	.3039E+01	-.7184E+02	.1606E+02
GLoads 70	.3308E+01	.7579E+01	.4657E+01	-.1329E+02	.7184E+02	-.3550E+02
LLoads 54	.1477E+02	-.5074E+01	.3725E+01	-.7184E+02	-.3039E+01	.1606E+02
LLoads 70	.7579E+01	-.3308E+01	.4657E+01	.7184E+02	.1329E+02	-.3550E+02
			BEAM NO. 27			
GLoads 70	.4398E+01	.4147E+02	.6103E+01	.3777E+02	-.1438E+03	-.4450E+02
GLoads 86	.6080E+01	-.1353E+02	.4374E+01	-.1399E+02	.1438E+03	.6763E+02
LLoads 70	.4147E+02	-.4398E+01	.6103E+01	-.1438E+03	-.3777E+02	-.4450E+02
LLoads 86	-.1353E+02	-.6080E+01	.4374E+01	.1438E+03	.1399E+02	.6763E+02
			BEAM NO. 28			
GLoads 86	.2129E+02	.3359E+02	-.3572E+01	-.8369E+02	-.4670E+03	-.7705E+02
GLoads 102	-.1500E+02	-.1683E+02	.9858E+01	-.2710E+02	.4670E+03	-.2224E+03
LLoads 86	.3359E+02	-.2129E+02	-.3572E+01	-.4670E+03	.8369E+02	-.7705E+02
LLoads 102	-.1683E+02	.1500E+02	.9858E+01	.4670E+03	.2710E+02	-.2224E+03
			BEAM NO. 29			
GLoads 11	.2152E+02	.7264E+03	.1113E+02	.2117E+03	-.5811E+03	-.4990E+03
GLoads 28	-.8466E+01	-.6916E+03	.1922E+01	-.1104E+03	.5811E+03	.1692E+03
LLoads 11	.7264E+03	.1113E+02	.2152E+02	-.5811E+03	-.4990E+03	.2117E+03
LLoads 28	-.6916E+03	.1922E+01	-.8466E+01	.5811E+03	.1692E+03	-.1104E+03
			BEAM NO. 30			
GLoads 28	.1965E+00	.4409E+03	.2377E+01	-.1142E+03	-.3853E+03	.1965E+03
GLoads 44	.1285E+02	-.4061E+03	.1067E+02	.2291E+02	.3853E+03	-.5723E+02
LLoads 28	.4409E+03	.2377E+01	.1965E+00	-.3853E+03	.1965E+03	-.1142E+03
LLoads 44	-.4061E+03	.1067E+02	.1285E+02	.3853E+03	-.5723E+02	.2291E+02
			BEAM NO. 31			
GLoads 44	.8084E+01	.2917E+03	.7408E+01	.9162E+02	-.9005E+02	-.7524E+02
GLoads 60	.4967E+01	-.2569E+03	.5643E+01	-.7220E+02	.9005E+02	.4095E+02
LLoads 44	.2917E+03	.7408E+01	.8084E+01	-.9005E+02	-.7524E+02	.9162E+02
LLoads 60	-.2569E+03	.5643E+01	.4967E+01	.9005E+02	.4095E+02	-.7220E+02
			BEAM NO. 32			
GLoads 60	.6708E+01	.1776E+03	.7633E+01	-.2827E+02	.2157E+03	.2204E+02

========== I M A G E S 3 D ==========
= Copyright (c) 1984 Celestial Software Inc. =
==========

SOLVE BEAM LOADS/STRESSES Version 2.0 07/01/90

L

Load Case 3:UBC SEISMIC LOAD - SN & WE DIR.

GLoads Node LLoads Node Stress Node Stress Node	Fx Axial Axial Maximum	Fy Y-Shear Y-Shear Minimum	Fz Z-Shear Z-Shear Cmb. Shear	Mx Torsion Torsion	My Y-Bending Y-Bending	Mz Z-Bending Z-Bending
GLoads 76	.6344E+01	-.1428E+03	.5418E+01	.5264E+02	-.2157E+03	-.2604E+02
LLoads 60	.1776E+03	.7633E+01	.6708E+01	.2157E+03	.2204E+02	-.2827E+02
LLoads 76	-.1428E+03	.5418E+01	.6344E+01	-.2157E+03	-.2604E+02	.5264E+02
			BEAM NO. 33			
GLoads 76	.7753E+01	.1275E+03	.7560E+01	.5713E+02	.4082E+03	-.1425E+02
GLoads 92	.8561E+01	-.8399E+02	.8754E+01	-.7356E+02	-.4082E+03	.2536E+02
LLoads 76	.1275E+03	.7560E+01	.7753E+01	.4082E+03	-.1425E+02	.5713E+02
LLoads 92	-.8399E+02	.8754E+01	.8561E+01	-.4082E+03	.2536E+02	-.7356E+02
			BEAM NO. 34			
GLoads 92	.1592E+02	.7226E+02	.2339E+02	.1856E+03	.2943E+03	-.7819E+02
GLoads 108	-.6135E+01	-.4616E+02	-.1360E+02	.1196E+03	-.2943E+03	-.1038E+03
LLoads 92	.7226E+02	.2339E+02	.1592E+02	.2943E+03	-.7819E+02	.1856E+03
LLoads 108	-.4616E+02	-.1360E+02	-.6135E+01	-.2943E+03	-.1038E+03	.1196E+03
			BEAM NO. 35			
GLoads 17	.7116E+01	.2962E+02	.7554E+01	-.9942E+03	.4797E+03	-.8004E+02
GLoads 34	.1266E+01	-.7264E+01	.8274E+00	.1068E+04	-.4797E+03	.1570E+02
LLoads 17	.2962E+02	-.7116E+01	.7554E+01	.4797E+03	.9942E+03	-.8004E+02
LLoads 34	-.7264E+01	-.1266E+01	.8274E+00	-.4797E+03	-.1068E+04	.1570E+02
			BEAM NO. 36			
GLoads 34	.3871E+01	.2085E+02	.5517E+01	-.2488E+04	.3099E+03	-.1570E+02
GLoads 50	.4510E+01	.1503E+01	.2864E+01	.2517E+04	-.3099E+03	.2273E+02
LLoads 34	.2085E+02	-.3871E+01	.5517E+01	.3099E+03	.2488E+04	-.1570E+02
LLoads 50	.1503E+01	-.4510E+01	.2864E+01	-.3099E+03	-.2517E+04	.2273E+02
			BEAM NO. 37			
GLoads 50	.4947E+01	.3311E+02	.3950E+01	-.2828E+04	.1020E+03	-.2273E+02
GLoads 66	.3435E+01	-.1076E+02	.4432E+01	.2822E+04	-.1020E+03	.6103E+01
LLoads 50	.3311E+02	-.4947E+01	.3950E+01	.1020E+03	.2828E+04	-.2273E+02
LLoads 66	-.1076E+02	-.3435E+01	.4432E+01	-.1020E+03	-.2822E+04	.6103E+01
			BEAM NO. 38			
GLoads 66	.1818E+01	.3916E+02	.3039E+01	-.2197E+04	-.2395E+03	-.6103E+01
GLoads 82	.6564E+01	-.1681E+02	.5342E+01	.2172E+04	.2395E+03	.5831E+02
LLoads 66	.3916E+02	-.1818E+01	.3039E+01	-.2395E+03	.2197E+04	-.6103E+01
LLoads 82	-.1681E+02	-.6564E+01	.5342E+01	.2395E+03	-.2172E+04	.5831E+02
			BEAM NO. 39			
GLoads 82	.1121E+02	.4395E+02	-.2609E+01	.1212E+04	-.2003E+03	-.5831E+02
GLoads 98	-.7283E+00	-.1602E+02	.1309E+02	-.1428E+04	.2003E+03	-.1058E+03
LLoads 82	.4395E+02	-.1121E+02	-.2609E+01	-.2003E+03	-.1212E+04	.5831E+02
LLoads 98	-.1602E+02	.7283E+00	.1309E+02	.2003E+03	.1428E+04	-.1058E+03
			BEAM NO. 40			
GLoads 98	.1603E+02	.4571E+02	.2773E+02	.1620E+04	.2643E+03	-.1168E+03

========== I M A G E S 3 D ==========
= Copyright (c) 1984 Celestial Software Inc. =
==========

SOLVE BEAM LOADS/STRESSES Version 2.0 07/01/90

L

Load Case 3:UBC SEISMIC LOAD - SN & WE DIR.

GLoads Node LLoads Node Stress Node Stress Node	Fx Axial Axial Maximum	Fy Y-Shear Y-Shear Minimum	Fz Z-Shear Z-Shear Cmb. Shear	Mx Torsion Torsion	My Y-Bending Y-Bending	Mz Z-Bending Z-Bending
GLoads 114	-.9740E+01	-.2894E+02	-.2144E+02	-.1214E+04	-.2643E+03	-.9572E+02
LLoads 98	.4571E+02	-.1603E+02	.2773E+02	.2643E+03	-.1620E+04	-.1168E+03
LLoads 114	-.2894E+02	.9740E+01	-.2144E+02	-.2643E+03	.1214E+04	-.9572E+02
		BEAM NO. 41				
GLoads 99	-.1995E+02	-.4428E+02	.1087E+02	.6005E+03	-.1164E+04	-.5965E+03
GLoads 100	.2516E+02	.5816E+02	-.5663E+01	-.6005E+03	.1051E+04	-.1035E+03
LLoads 99	-.1995E+02	.4428E+02	-.1087E+02	.6005E+03	.1164E+04	.5965E+03
LLoads 100	.2516E+02	-.5816E+02	.5663E+01	-.6005E+03	-.1051E+04	.1035E+03
		BEAM NO. 42				
GLoads 100	.2351E+01	.1571E+02	.6115E+01	.7647E+03	-.8042E+03	.1035E+03
GLoads 101	.2856E+01	-.1828E+01	-.9084E+00	-.7647E+03	.7562E+03	.1634E+02
LLoads 100	.2351E+01	-.1571E+02	-.6115E+01	.7647E+03	.8042E+03	-.1035E+03
LLoads 101	.2856E+01	.1828E+01	.9084E+00	-.7647E+03	-.7562E+03	-.1634E+02
		BEAM NO. 43				
GLoads 101	.5776E+02	-.8150E+01	.3793E+01	.8076E+03	-.7473E+03	-.1634E+02
GLoads 102	-.5255E+02	.2204E+02	.1414E+01	-.8076E+03	.7311E+03	-.1899E+03
LLoads 101	.5776E+02	.8150E+01	-.3793E+01	.8076E+03	.7473E+03	.1634E+02
LLoads 102	-.5255E+02	-.2204E+02	-.1414E+01	-.8076E+03	-.7311E+03	.1899E+03
		BEAM NO. 44				
GLoads 102	.7665E+01	.1111E+02	.6171E+02	.7433E+02	-.3229E+03	.1117E+03
GLoads 103	-.1759E+01	.4635E+01	-.5581E+02	-.2413E+02	.2499E+03	-.1117E+03
LLoads 102	-.6171E+02	-.1111E+02	-.7665E+01	-.1117E+03	.3229E+03	-.7433E+02
LLoads 103	.5581E+02	-.4635E+01	.1759E+01	.1117E+03	-.2499E+03	.2413E+02
		BEAM NO. 45				
GLoads 103	.1112E+02	.8389E+01	.9636E+01	.2413E+02	.3824E+03	.3203E+03
GLoads 104	-.5210E+01	.7359E+01	-.3731E+01	-.1614E+02	-.5089E+03	-.3203E+03
LLoads 103	-.9636E+01	-.8389E+01	-.1112E+02	-.3203E+03	-.3824E+03	-.2413E+02
LLoads 104	.3731E+01	-.7359E+01	.5210E+01	.3203E+03	.5089E+03	.1614E+02
		BEAM NO. 46				
GLoads 104	.3819E+01	.7731E+01	-.3697E+01	.1614E+02	.9732E+03	.1140E+03
GLoads 105	.2087E+01	.8017E+01	.9602E+01	-.1836E+02	-.9866E+03	-.1140E+03
LLoads 104	.3697E+01	-.7731E+01	-.3819E+01	-.1140E+03	-.9732E+03	-.1614E+02
LLoads 105	-.9602E+01	-.8017E+01	-.2087E+01	.1140E+03	.9866E+03	.1836E+02
		BEAM NO. 47				
GLoads 105	-.1329E+01	.7975E+01	.5995E+01	.1836E+02	.8463E+03	-.4938E+02
GLoads 106	.7234E+01	.7773E+01	-.8998E-01	-.1679E+02	-.7800E+03	.4938E+02
LLoads 105	-.5995E+01	-.7975E+01	.1329E+01	.4938E+02	-.8463E+03	-.1836E+02
LLoads 106	.8998E-01	-.7773E+01	-.7234E+01	-.4938E+02	.7800E+03	.1679E+02
		BEAM NO. 48				
GLoads 106	-.7930E+01	.6328E+01	.3832E+02	.1679E+02	.6455E+02	-.2552E+03

========== I M A G E S 3 D ==========
= Copyright (c) 1984 Celestial Software Inc. =
==========

SOLVE BEAM LOADS/STRESSES Version 2.0 07/01/90

L

Load Case 3:UBC SEISMIC LOAD - SN & WE DIR.

GLoads Node LLoads Node Stress Node Stress Node	Fx Axial Axial Maximum	Fy Y-Shear Y-Shear Minimum	Fz Z-Shear Z-Shear Cmb. Shear	Mx Torsion Torsion	My Y-Bending Y-Bending	Mz Z-Bending Z-Bending
GLoads 107	.1383E+02	.9419E+01	-.3242E+02	-.4075E+02	.1041E+03	.2552E+03
LLoads 106	-.3832E+02	-.6328E+01	.7930E+01	.2552E+03	-.6455E+02	-.1679E+02
LLoads 107	.3242E+02	-.9419E+01	-.1383E+02	-.2552E+03	-.1041E+03	.4075E+02
		BEAM NO. 49				
GLoads 107	-.8326E+01	.8920E+01	.1133E+03	.4075E+02	-.1137E+04	-.2365E+03
GLoads 108	.1423E+02	.6828E+01	-.1074E+03	-.2454E+02	.1312E+04	.2365E+03
LLoads 107	-.1133E+03	-.8920E+01	.8326E+01	.2365E+03	.1137E+04	-.4075E+02
LLoads 108	.1074E+03	-.6828E+01	-.1423E+02	-.2365E+03	-.1312E+04	.2454E+02
		BEAM NO. 50				
GLoads 108	.6012E+01	.3450E+01	.1270E+02	-.5442E+03	-.1180E+04	-.2872E+02
GLoads 109	-.2334E+00	.1196E+02	-.6918E+01	.5442E+03	.1031E+04	-.3581E+02
LLoads 108	.6012E+01	-.3450E+01	-.1270E+02	-.5442E+03	.1180E+04	.2872E+02
LLoads 109	-.2334E+00	-.1196E+02	.6918E+01	.5442E+03	-.1031E+04	.3581E+02
		BEAM NO. 51				
GLoads 109	.5320E+01	.8830E+01	.1432E+02	-.6232E+03	-.1043E+02	.3581E+02
GLoads 110	.4578E+00	.6579E+01	-.8546E+01	.6232E+03	-.1630E+03	-.1874E+02
LLoads 109	.5320E+01	-.8830E+01	-.1432E+02	-.6232E+03	.1043E+02	-.3581E+02
LLoads 110	.4578E+00	-.6579E+01	.8546E+01	.6232E+03	.1630E+03	.1874E+02
		BEAM NO. 52				
GLoads 110	.1105E+02	.7582E+01	.7062E+01	-.3506E+03	.9467E+03	.1874E+02
GLoads 111	-.5270E+01	.7827E+01	-.1283E+01	.3506E+03	-.1010E+04	-.2060E+02
LLoads 110	.1105E+02	-.7582E+01	-.7062E+01	-.3506E+03	-.9467E+03	-.1874E+02
LLoads 111	-.5270E+01	-.7827E+01	.1283E+01	.3506E+03	.1010E+04	.2060E+02
		BEAM NO. 53				
GLoads 111	.1893E+02	.7984E+01	.1691E+01	-.7129E+02	.1199E+04	.2060E+02
GLoads 112	-.1316E+02	.7425E+01	.4087E+01	.7129E+02	-.1181E+04	-.1636E+02
LLoads 111	.1893E+02	-.7984E+01	-.1691E+01	-.7129E+02	-.1199E+04	-.2060E+02
LLoads 112	-.1316E+02	-.7425E+01	-.4087E+01	.7129E+02	.1181E+04	.1636E+02
		BEAM NO. 54				
GLoads 112	.1839E+02	.7195E+01	-.7746E+01	.3844E+03	.6537E+03	.1636E+02
GLoads 113	-.1261E+02	.8214E+01	.1352E+02	-.3844E+03	-.4924E+03	-.2408E+02
LLoads 112	.1839E+02	-.7195E+01	.7746E+01	.3844E+03	-.6537E+03	-.1636E+02
LLoads 113	-.1261E+02	-.8214E+01	-.1352E+02	-.3844E+03	.4924E+03	.2408E+02
		BEAM NO. 55				
GLoads 113	-.9858E+01	.2460E+01	-.1235E+01	.2877E+03	-.2213E+03	.2408E+02
GLoads 114	.1564E+02	.1295E+02	.7014E+01	-.2877E+03	.2838E+03	-.1036E+03
LLoads 113	-.9858E+01	-.2460E+01	.1235E+01	.2877E+03	.2213E+03	-.2408E+02
LLoads 114	.1564E+02	-.1295E+02	-.7014E+01	-.2877E+03	-.2838E+03	.1036E+03
		BEAM NO. 56				
GLoads 115	.6421E+04	.1600E+05	.6426E+04	-.1371E+06	.2535E+02	.1365E+06

```
============== I M A G E S  3 D ==============
= Copyright (c) 1984   Celestial Software Inc. =
===============================================
```

SOLVE BEAM LOADS/STRESSES Version 2.0 07/01/90

L

Load Case 3:UBC SEISMIC LOAD - SN & WE DIR.

GLoads Node LLoads Node Stress Node Stress Node	Fx Axial Axial Maximum	Fy Y-Shear Y-Shear Minimum	Fz Z-Shear Z-Shear Cmb. Shear	Mx Torsion Torsion	My Y-Bending Y-Bending	Mz Z-Bending Z-Bending
GLoads 120	-.6223E+04	-.1547E+05	-.6228E+04	-.1982E+06	-.2535E+02	.1985E+06
LLoads 115	-.1600E+05	-.8316E+04	.3655E+04	-.2535E+02	-.7753E+05	-.1773E+06
LLoads 120	.1547E+05	.8060E+04	-.3542E+04	.2535E+02	-.1132E+06	-.2567E+06
			BEAM NO. 57			
GLoads 120	-.5027E+04	-.1453E+05	-.5022E+04	.1982E+06	.2535E+02	-.1985E+06
GLoads 121	.5261E+04	.1515E+05	.5255E+04	.1230E+06	-.2535E+02	-.1230E+06
LLoads 120	.1453E+05	.6502E+04	-.2865E+04	-.2535E+02	.1132E+06	.2567E+06
LLoads 121	-.1515E+05	-.6805E+04	.2998E+04	.2535E+02	.7005E+05	.1592E+06
			BEAM NO. 58			
GLoads 116	.2351E+04	.5250E+04	.4343E+03	.1883E+05	.2420E+03	-.8949E+04
GLoads 121	-.2273E+04	-.5041E+04	-.3559E+03	-.1883E+05	-.8539E+04	.1170E+06
LLoads 116	.2351E+04	.5250E+04	.4343E+03	.1883E+05	.2420E+03	-.8949E+04
LLoads 121	-.2273E+04	-.5041E+04	-.3559E+03	-.1883E+05	-.8539E+04	.1170E+06
			BEAM NO. 59			
GLoads 117	.4372E+03	.5247E+04	.2349E+04	.8981E+04	-.2366E+03	-.1879E+05
GLoads 121	-.3587E+03	-.5038E+04	-.2270E+04	-.1170E+06	.8594E+04	.1879E+05
LLoads 117	.2349E+04	.5247E+04	-.4372E+03	-.1879E+05	-.2366E+03	-.8981E+04
LLoads 121	-.2270E+04	-.5038E+04	.3587E+03	.1879E+05	.8594E+04	.1170E+06
			BEAM NO. 60			
GLoads 118	.2351E+04	.2742E+04	.4370E+03	.1881E+05	-.1982E+03	-.2376E+05
GLoads 121	-.2273E+04	-.2533E+04	-.3586E+03	-.1881E+05	.8552E+04	-.3163E+05
LLoads 118	-.2351E+04	.2742E+04	-.4370E+03	-.1881E+05	-.1982E+03	.2376E+05
LLoads 121	.2273E+04	-.2533E+04	.3586E+03	.1881E+05	.8552E+04	.3163E+05
			BEAM NO. 61			
GLoads 119	.4345E+03	.2745E+04	.2349E+04	.2379E+05	.2803E+03	-.1881E+05
GLoads 121	-.3560E+03	-.2536E+04	-.2270E+04	.3166E+05	-.8581E+04	.1881E+05
LLoads 119	-.2349E+04	.2745E+04	.4345E+03	.1881E+05	.2803E+03	.2379E+05
LLoads 121	.2270E+04	-.2536E+04	-.3560E+03	-.1881E+05	-.8581E+04	.3166E+05
			BEAM NO. 62			
GLoads 125	.3741E+01	-.5277E+02	.6368E+01	-.2207E+04	.1633E+03	-.1128E+02
GLoads 127	.4641E+01	.7513E+02	.2014E+01	.2255E+04	-.1633E+03	.2117E+02
LLoads 125	-.5277E+02	-.3741E+01	.6368E+01	.1633E+03	.2207E+04	-.1128E+02
LLoads 127	.7513E+02	-.4641E+01	.2014E+01	-.1633E+03	-.2255E+04	.2117E+02
			BEAM NO. 63			
GLoads 127	.4312E+01	-.7391E+01	.3062E+01	-.2501E+04	-.3836E+02	-.2117E+02
GLoads 129	.4070E+01	.2974E+02	.5320E+01	.2476E+04	.3836E+02	.1852E+02
LLoads 127	-.7391E+01	-.4312E+01	.3062E+01	-.3836E+02	.2501E+04	-.2117E+02
LLoads 129	.2974E+02	-.4070E+01	.5320E+01	.3836E+02	-.2476E+04	.1852E+02
			BEAM NO. 64			
GLoads 129	.4148E+01	.2067E+02	-.1431E+01	-.1471E+04	-.4297E+03	-.1852E+02


```
============== I M A G E S  3 D ==============
= Copyright (c) 1984   Celestial Software Inc. =
===============================================
```

SOLVE BEAM LOADS/STRESSES Version 2.0 07/01/90

L

Load Case 3:UBC SEISMIC LOAD - SN & WE DIR.

GLoads Node LLoads Node Stress Node Stress Node	Fx Axial Axial Maximum	Fy Y-Shear Y-Shear Minimum	Fz Z-Shear Z-Shear Cmb. Shear	Mx Torsion Torsion	My Y-Bending Y-Bending	Mz Z-Bending Z-Bending
GLoads 131	.4234E+01	.1679E+01	.9813E+01	.1347E+04	.4297E+03	.1947E+02
LLoads 129	.2067E+02	-.4148E+01	-.1431E+01	-.4297E+03	.1471E+04	-.1852E+02
LLoads 131	.1679E+01	-.4234E+01	.9813E+01	.4297E+03	-.1347E+04	.1947E+02
			BEAM NO. 65			
GLoads 131	.5817E+01	.6684E+02	.5839E+01	.2545E+03	-.1356E+03	-.1947E+02
GLoads 133	.4660E+01	-.3890E+02	.4638E+01	-.2380E+03	.1356E+03	.3554E+01
LLoads 131	.6684E+02	-.5817E+01	.5839E+01	-.1356E+03	-.2545E+03	-.1947E+02
LLoads 133	-.3890E+02	-.4660E+01	.4638E+01	.1356E+03	.2380E+03	.3554E+01
			BEAM NO. 66			
GLoads 133	.3947E+00	.3833E+02	-.4779E+01	.7221E+03	.6997E+03	-.3554E+01
GLoads 135	.5892E+01	-.2157E+02	.1107E+02	.8528E+03	-.6997E+03	.4890E+02
LLoads 133	.3833E+02	-.3947E+00	-.4779E+01	.6997E+03	-.7221E+03	-.3554E+01
LLoads 135	-.2157E+02	-.5892E+01	.1107E+02	-.6997E+03	.8528E+03	.4890E+02
			BEAM NO. 67			
GLoads 115	-.8331E+03	-.3994E+04	.9389E+02	.3331E+05	-.2391E+04	-.3435E+05
GLoads 116	.1272E+04	.5163E+04	.3446E+03	-.1883E+05	-.2420E+03	.8949E+04
LLoads 115	.4078E+04	-.1052E+03	.9389E+02	-.3606E+04	.3320E+05	-.3435E+05
LLoads 116	-.5307E+04	.3275E+03	.3446E+03	.3606E+04	-.1848E+05	.8949E+04
			BEAM NO. 68			
GLoads 115	.8813E+02	-.3995E+04	-.8276E+03	.3373E+05	.2517E+04	-.3394E+05
GLoads 117	.3504E+03	.5164E+04	.1266E+04	-.8981E+04	.2366E+03	.1879E+05
LLoads 115	.4078E+04	-.9969E+02	-.8813E+02	.3595E+04	-.3384E+05	-.3373E+05
LLoads 117	-.5307E+04	.3220E+03	-.3504E+03	-.3595E+04	.1845E+05	.8981E+04
			BEAM NO. 69			
GLoads 115	.9599E+03	-.4050E+04	.9345E+02	.3334E+05	.2444E+04	-.3555E+05
GLoads 118	-.5214E+03	.5220E+04	.3451E+03	-.1881E+05	.1982E+03	.2376E+05
LLoads 115	.4157E+04	-.2199E+03	-.9345E+02	.3560E+04	-.3324E+05	.3555E+05
LLoads 118	-.5229E+04	-.4208E+03	-.3451E+03	-.3560E+04	.1847E+05	-.2376E+05
			BEAM NO. 70			
GLoads 115	.8857E+02	-.4049E+04	.9654E+03	.3493E+05	-.2464E+04	-.3391E+05
GLoads 119	.3500E+03	.5219E+04	-.5268E+03	-.2379E+05	.2803E+03	.1881E+05
LLoads 115	.4157E+04	-.2254E+03	.8857E+02	-.3641E+04	.3380E+05	.3493E+05
LLoads 119	-.5229E+04	-.4153E+03	.3500E+03	.3641E+04	-.1846E+05	-.2379E+05

```
============== I M A G E S  3 D ==============
= Copyright (c) 1984   Celestial Software Inc. =
===============================================
```

SOLVE BEAM LOADS/STRESSES Version 2.0 07/01/90

L

Load Case 3:UBC SEISMIC LOAD - SN & WE DIR.

MAXIMUM STRESS SUMMARY FOR BEAMS/TRUSSES
WITHIN SPECIFIED RANGE 1- 70

Maximum (absolute) Stress = .1381E+04 at BEAM 56

Beam	Axial	Y-Shear	Z-Shear	Torsion	Y-Bending	Z-Bending
56	.4396E+03	-.4580E+03	.2013E+03	.1440E-02	-.2882E+03	-.6535E+03
	Maximum	Minimum	Cmb. Shear			
	.1381E+04	-.5021E+03	.6907E+03			


```
============== I M A G E S  3 D ==============
= Copyright (c) 1984   Celestial Software Inc. =
===============================================
```

SOLVE PLATE LOADS/STRESSES Version 2.0 07/01/90

L

Load Case 3:UBC SEISMIC LOAD - SN & WE DIR.

PLATE LOADS AND/OR STRESSES

GLoads	Node	Fx	Fy	Fz	Mx	My	Mz
				PLATE 1			
GLoads	2	.2964E+03	.6433E+03	.1163E+02	-.4237E+02	.1521E+03	.0000E+00
GLoads	3	.4130E+02	.2312E+02	.1090E+02	.1954E+03	.4181E+02	.0000E+00
GLoads	20	-.2630E+03	-.5667E+03	-.6010E+01	.2849E+03	-.1646E+03	.0000E+00
GLoads	19	-.7470E+02	-.9978E+02	-.1651E+02	.5767E+02	.3753E+02	.0000E+00
				PLATE 2			
GLoads	3	.1918E+03	.3696E+03	-.6464E+01	-.1954E+03	.1570E+03	.0000E+00
GLoads	4	.1175E+03	-.2119E+03	.7053E+00	.8626E+02	.1341E+03	.0000E+00
GLoads	21	-.1908E+03	-.2859E+03	.1821E+02	.1204E+03	-.2838E+02	.0000E+00
GLoads	20	-.1185E+03	.1282E+03	-.1245E+02	-.1379E+03	-.4156E+01	.0000E+00
				PLATE 3			
GLoads	4	.4526E+02	-.6158E+01	-.1401E+02	-.8626E+02	.4115E+02	.0000E+00
GLoads	5	.1922E+03	-.5236E+03	.2097E+02	.2167E+03	.2467E+03	.0000E+00
GLoads	22	-.9969E+02	.1413E+03	.1698E+02	.1514E+03	.3459E+03	.0000E+00
GLoads	21	-.1378E+03	.3884E+03	-.2394E+02	-.1287E+03	-.1151E+03	.0000E+00
				PLATE 4			
GLoads	5	.1860E+02	-.5887E+03	.2252E+03	.0000E+00	-.2267E+03	-.1486E+03
GLoads	6	-.1537E+02	-.7051E+02	.4366E+02	.0000E+00	-.5072E+02	.5499E+02
GLoads	23	-.2367E+02	.4521E+03	-.1756E+03	-.1043E+03	.3827E+02	.0000E+00
GLoads	22	.2044E+02	.2071E+03	-.9324E+02	.0000E+00	-.3659E+03	-.8176E+02
				PLATE 5			
GLoads	6	.1954E+01	-.3016E+03	.1852E+03	.0000E+00	-.7901E+02	-.5499E+02
GLoads	7	.5485E+00	.2714E+03	.1730E+03	.0000E+00	-.1446E+03	.9988E+02
GLoads	24	-.1420E+02	.2369E+03	-.1849E+03	-.5115E+01	-.5299E+02	.0000E+00
GLoads	23	.1170E+02	-.2068E+03	-.1732E+03	.1051E+03	.6493E+02	.0000E+00
				PLATE 6			
GLoads	7	.1351E+02	-.1351E+03	.1408E+03	.0000E+00	.2730E+02	-.9988E+02
GLoads	8	.7064E+01	.4707E+03	.2509E+03	.0000E+00	-.1280E+03	.5534E+01
GLoads	25	-.1422E+02	.8527E+02	-.1572E+03	.1230E+03	-.1575E+03	.0000E+00
GLoads	24	-.6354E+01	-.4208E+03	-.2345E+03	.2353E+03	.1473E+03	.0000E+00
				PLATE 7			
GLoads	8	.8435E+01	.5331E+01	.9731E+02	.0000E+00	.1298E+03	-.5534E+01
GLoads	9	.1608E+02	.6479E+03	.3210E+03	.0000E+00	-.2438E+02	-.1348E+03
GLoads	26	-.9097E+01	-.5415E+02	-.1245E+03	.2662E+03	-.1504E+03	.0000E+00
GLoads	25	-.1542E+02	-.5991E+03	-.2938E+03	.1329E+03	.1532E+03	.0000E+00
				PLATE 8			
GLoads	9	-.3283E+01	.1535E+03	.5899E+02	.0000E+00	.1465E+03	.1348E+03
GLoads	10	-.8035E+01	.8434E+03	.3847E+03	.0000E+00	.8707E+02	.6037E+02
GLoads	27	.2331E+02	-.2136E+03	-.1084E+03	-.8872E+01	-.5031E+02	.0000E+00
GLoads	26	-.1199E+02	-.7833E+03	-.3353E+03	-.4494E+02	.5347E+02	.0000E+00

========== I M A G E S 3 D ==========
= Copyright (c) 1984 Celestial Software Inc. =
==========

SOLVE PLATE LOADS/STRESSES Version 2.0 07/01/90

L

Load Case 3:UBC SEISMIC LOAD - SN & WE DIR.

GLoads	Node	Fx	Fy	Fz	Mx	My	Mz
				PLATE 9			
GLoads	10	-.5051E+01	.4510E+03	-.2945E+02	.0000E+00	.4052E+02	-.6037E+02
GLoads	11	.5631E+02	.1165E+04	.4333E+03	.0000E+00	.2263E+03	-.5614E+03
GLoads	28	-.1796E+02	-.5922E+03	-.8332E+02	.0000E+00	.3781E+03	-.4936E+03
GLoads	27	-.3329E+02	-.1024E+04	-.3205E+03	.1223E+02	-.5054E+02	.0000E+00
				PLATE 10			
GLoads	11	.4273E+03	.1138E+04	.3733E+02	.4147E+03	-.3161E+03	.0000E+00
GLoads	12	-.6483E+02	.4854E+03	-.1401E+02	-.9048E+02	-.8074E+02	.0000E+00
GLoads	29	-.3202E+03	-.1011E+04	-.3034E+02	-.1428E+03	.1333E+03	.0000E+00
GLoads	28	-.4230E+02	-.6121E+03	.7022E+01	.3317E+03	-.4092E+03	.0000E+00
				PLATE 11			
GLoads	12	.3923E+03	.8641E+03	-.2338E+01	.9048E+02	-.1782E+03	.0000E+00
GLoads	13	.1635E+02	.2233E+03	-.2964E+01	-.2435E+03	-.2208E+03	.0000E+00
GLoads	30	-.3437E+03	-.8161E+03	-.1632E+02	-.1178E+03	.3097E+02	.0000E+00
GLoads	29	-.6496E+02	-.2713E+03	.2162E+02	.1541E+03	.7562E+02	.0000E+00
				PLATE 12			
GLoads	13	.3447E+03	.7133E+03	.1883E+02	.2435E+03	-.7281E+02	.0000E+00
GLoads	14	.4384E+02	.1154E+03	.8492E+01	-.1363E+03	-.2421E+03	.0000E+00
GLoads	31	-.3149E+03	-.6790E+03	-.2196E+02	.6377E+02	-.9285E+02	.0000E+00
GLoads	30	-.7371E+02	-.1497E+03	-.5361E+01	.4300E+03	.2035E+03	.0000E+00
				PLATE 13			
GLoads	14	.2955E+03	.5930E+03	.1478E+02	.1363E+03	.4714E+02	.0000E+00
GLoads	15	.7220E+02	.3049E+02	.1770E+02	-.2120E+02	-.1696E+03	.0000E+00
GLoads	32	-.2715E+03	-.5639E+03	-.1795E+02	.2366E+03	-.1320E+03	.0000E+00
GLoads	31	-.9620E+02	-.5963E+02	-.1454E+02	.3629E+03	.2507E+03	.0000E+00
				PLATE 14			
GLoads	15	.2406E+03	.4742E+03	.1310E+02	.2120E+02	.1118E+03	.0000E+00
GLoads	16	.9831E+02	-.4880E+02	.8338E+01	-.3164E+02	-.8802E+02	.0000E+00
GLoads	33	-.2191E+03	-.4428E+03	-.5338E+01	.2056E+03	-.1582E+03	.0000E+00
GLoads	32	-.1197E+03	.1732E+02	-.1610E+02	.2764E+03	.1799E+03	.0000E+00
				PLATE 15			
GLoads	16	.1811E+03	.3419E+03	.1133E+02	.3164E+02	.1362E+03	.0000E+00
GLoads	17	.1262E+03	-.1419E+03	.3967E+02	.3366E+03	.3352E+02	.0000E+00
GLoads	34	-.1650E+03	-.3039E+03	-.2209E+02	.5245E+03	-.1685E+02	.0000E+00
GLoads	33	-.1423E+03	.1039E+03	-.2891E+02	.2294E+03	.1138E+03	.0000E+00
				PLATE 16			
GLoads	19	.2203E+03	.6329E+03	-.5448E+01	-.1939E+03	.3037E+03	.0000E+00
GLoads	20	.1442E+03	-.2975E+02	.9154E+01	.1550E+02	-.6386E+02	.0000E+00
GLoads	36	-.2128E+03	-.5570E+03	.1021E+02	.2162E+03	-.2003E+03	.0000E+00
GLoads	35	-.1517E+03	-.4618E+02	-.1392E+02	.4380E+02	.2252E+03	.0000E+00
				PLATE 17			
GLoads	20	.2053E+03	.3831E+03	-.2260E+02	-.1625E+03	.2326E+03	.0000E+00

========== I M A G E S 3 D ==========
= Copyright (c) 1984 Celestial Software Inc. =
==========

SOLVE PLATE LOADS/STRESSES Version 2.0 07/01/90

L

Load Case 3:UBC SEISMIC LOAD - SN & WE DIR.

GLoads	Node	Fx	Fy	Fz	Mx	My	Mz
GLoads	21	.1311E+03	-.2345E+03	.2357E+02	.9219E+02	.2157E+03	.0000E+00
GLoads	37	-.2094E+03	-.3069E+03	.2578E+02	.1469E+03	.1225E+03	.0000E+00
GLoads	36	-.1269E+03	.1583E+03	-.2675E+02	-.5520E+02	.1036E+03	.0000E+00
				PLATE 18			
GLoads	21	.1656E+03	.4695E+02	-.4975E+02	-.8387E+02	-.7225E+02	.0000E+00
GLoads	22	.6348E+01	-.2864E+03	.2420E+02	-.6042E+02	.7133E+03	.0000E+00
GLoads	38	-.1398E+03	.9625E+01	.6303E+02	-.2113E+03	.7430E+03	.0000E+00
GLoads	37	-.3219E+02	.2299E+03	-.3747E+02	-.2067E+03	-.1919E+03	.0000E+00
				PLATE 19			
GLoads	22	.3215E+02	-.3023E+03	.1297E+02	.0000E+00	-.6631E+03	-.1047E+02
GLoads	23	-.4362E+02	-.3616E+02	.1444E+03	-.8400E+01	.6730E+01	.0000E+00
GLoads	39	-.3737E+02	.2595E+03	-.2397E+02	-.1224E+03	.9908E+02	.0000E+00
GLoads	38	.4885E+02	.7896E+02	-.1334E+03	.0000E+00	-.6981E+03	.1321E+03
				PLATE 20			
GLoads	23	.1940E+02	-.3056E+03	.1683E+03	.7684E+01	-.1099E+03	.0000E+00
GLoads	24	-.2170E+02	.2638E+03	.1894E+03	-.1448E+03	-.2872E+03	.0000E+00
GLoads	40	-.2451E+02	.2439E+03	-.1497E+03	-.1825E+02	-.2541E+03	.0000E+00
GLoads	39	.2681E+02	-.2021E+03	-.2080E+03	.1049E+03	-.6501E+02	.0000E+00
				PLATE 21			
GLoads	24	.6068E+01	-.1764E+03	.1938E+03	-.8530E+02	.1929E+03	.0000E+00
GLoads	25	-.2886E+01	.4626E+03	.2225E+03	-.1248E+03	-.3243E+03	.0000E+00
GLoads	41	-.7925E+01	.1282E+03	-.1911E+03	.1382E+03	-.3258E+03	.0000E+00
GLoads	40	.4742E+01	-.4144E+03	-.2251E+03	.1419E+03	.2897E+03	.0000E+00
				PLATE 22			
GLoads	25	-.3666E+01	-.4533E+02	.1923E+03	-.1310E+03	.3286E+03	.0000E+00
GLoads	26	.6132E+01	.6125E+03	.2391E+03	-.8738E+02	-.1829E+03	.0000E+00
GLoads	42	.6468E+01	-.1487E+00	-.2080E+03	.1418E+03	-.2757E+03	.0000E+00
GLoads	41	-.8935E+01	-.5670E+03	-.2235E+03	.1309E+03	.3253E+03	.0000E+00
				PLATE 23			
GLoads	26	-.2123E+02	.1284E+03	.1845E+03	-.1338E+03	.2798E+03	.0000E+00
GLoads	27	.2250E+02	.7483E+03	.2100E+03	.4160E+02	.1255E+03	.0000E+00
GLoads	43	.2353E+02	-.1883E+03	-.2103E+03	.1296E+03	.7240E+02	.0000E+00
GLoads	42	-.2480E+02	-.6884E+03	-.1843E+03	-.9456E+01	.2357E+03	.0000E+00
				PLATE 24			
GLoads	27	-.4870E+02	.3930E+03	.1827E+03	-.4496E+02	-.2470E+02	.0000E+00
GLoads	28	.2014E+02	.6916E+03	.1390E+02	.0000E+00	.6897E+03	.1279E+03
GLoads	44	.6399E+02	-.4126E+03	-.1597E+03	.0000E+00	.7440E+03	.2814E+03
GLoads	43	-.3542E+02	-.6720E+03	-.3690E+02	-.1741E+03	-.1050E+03	.0000E+00
				PLATE 25			
GLoads	28	.1259E+02	.6678E+03	.2230E+02	-.1071E+03	-.8544E+03	.0000E+00
GLoads	29	.1447E+03	.4308E+03	-.5580E+02	-.1084E+03	.4577E+02	.0000E+00
GLoads	45	-.2885E+02	-.6590E+03	-.4019E+02	-.2338E+03	.2120E+03	.0000E+00

========== I M A G E S 3 D ==========
= Copyright (c) 1984 Celestial Software Inc. =
==========

SOLVE PLATE LOADS/STRESSES Version 2.0 07/01/90

L

Load Case 3:UBC SEISMIC LOAD - SN & WE DIR.

GLoads	Node	Fx	Fy	Fz	Mx	My	Mz
GLoads	44	-.1285E+03	-.4396E+03	.7369E+02	-.2876E+03	-.8592E+03	.0000E+00
			PLATE 26				
GLoads	29	.2050E+03	.7573E+03	.2911E+02	.9709E+02	-.2547E+03	.0000E+00
GLoads	30	.1434E+03	.2054E+03	-.2698E+02	-.2407E+03	-.3227E+03	.0000E+00
GLoads	46	-.1722E+03	-.7108E+03	-.3249E+02	-.3533E+02	-.1891E+03	.0000E+00
GLoads	45	-.1762E+03	-.2519E+03	.3036E+02	.2259E+03	-.1354E+03	.0000E+00
			PLATE 27				
GLoads	30	.2386E+03	.6659E+03	.1325E+02	-.7151E+02	.8819E+02	.0000E+00
GLoads	31	.1495E+03	.7224E+02	-.9132E+01	-.2915E+03	-.4407E+03	.0000E+00
GLoads	47	-.2122E+03	-.6352E+03	-.1735E+02	.1651E+03	-.3291E+03	.0000E+00
GLoads	46	-.1759E+03	-.1030E+03	.1323E+02	.2885E+03	.2800E+03	.0000E+00
			PLATE 28				
GLoads	31	.2262E+03	.5720E+03	.1022E+02	-.1352E+03	.2829E+03	.0000E+00
GLoads	32	.1589E+03	-.1583E+02	.1788E+01	-.2708E+03	-.4078E+03	.0000E+00
GLoads	48	-.2108E+03	-.5428E+03	-.1175E+02	.2788E+03	-.4091E+03	.0000E+00
GLoads	47	-.1743E+03	-.1336E+02	-.2502E+00	.3913E+03	.3829E+03	.0000E+00
			PLATE 29				
GLoads	32	.1970E+03	.4680E+03	-.3155E+01	-.2422E+03	.3599E+03	.0000E+00
GLoads	33	.1697E+03	-.9320E+02	.8850E+01	-.2467E+03	-.2594E+03	.0000E+00
GLoads	49	-.1934E+03	-.4386E+03	.6885E+01	.3124E+03	-.2820E+03	.0000E+00
GLoads	48	-.1733E+03	.6387E+02	-.1258E+02	.3018E+03	.4202E+03	.0000E+00
			PLATE 30				
GLoads	33	.1564E+03	.3376E+03	-.1001E+02	-.1884E+03	.3038E+03	.0000E+00
GLoads	34	.1715E+03	-.1782E+03	.3201E+02	-.3724E+02	.2055E+02	.0000E+00
GLoads	50	-.1623E+03	-.2975E+03	.4555E+01	.4178E+03	-.3710E+02	.0000E+00
GLoads	49	-.1656E+03	.1380E+03	-.2656E+02	.2919E+03	.2674E+03	.0000E+00
			PLATE 31				
GLoads	35	.1363E+03	.4628E+03	-.1678E+02	-.1839E+03	.3805E+03	.0000E+00
GLoads	36	.1270E+03	-.8565E+01	.1700E+02	-.6965E+02	-.1058E+03	.0000E+00
GLoads	52	-.1538E+03	-.4153E+03	.1804E+02	.1597E+03	-.1426E+03	.0000E+00
GLoads	51	-.1095E+03	-.3884E+02	-.1826E+02	.9874E+02	.3468E+03	.0000E+00
			PLATE 32				
GLoads	36	.1808E+03	.3221E+03	-.3238E+02	-.9134E+02	.2025E+03	.0000E+00
GLoads	37	.6991E+02	-.1248E+03	.2872E+02	-.2021E+02	.2698E+03	.0000E+00
GLoads	53	-.1791E+03	-.2788E+03	.3559E+02	.2275E+02	.2501E+03	.0000E+00
GLoads	52	-.7161E+02	.8149E+02	-.3193E+02	.8329E+01	.1565E+03	.0000E+00
			PLATE 33				
GLoads	37	.1398E+03	.1168E+03	-.4893E+02	.8003E+02	-.2003E+03	.0000E+00
GLoads	38	.4208E+01	-.1493E+03	.5601E+02	.1841E+03	.8946E+03	.0000E+00
GLoads	54	-.1297E+03	-.8251E+02	.4367E+02	-.1888E+02	.9036E+03	.0000E+00
GLoads	53	-.1431E+02	.1151E+03	-.5074E+02	-.8964E+02	-.2357E+03	.0000E+00
			PLATE 34				
GLoads	38	.4363E+02	-.1247E+03	-.3098E+02	.0000E+00	-.8343E+03	-.7538E+02

========== I M A G E S 3 D ==========
= Copyright (c) 1984 Celestial Software Inc. =
==========

SOLVE PLATE LOADS/STRESSES Version 2.0 07/01/90

L

Load Case 3:UBC SEISMIC LOAD - SN & WE DIR.

GLoads	Node	Fx	Fy	Fz	Mx	My	Mz
GLoads	39	-.5121E+02	.2453E+02	.1242E+03	.4745E+02	.9658E+02	.0000E+00
GLoads	55	-.4744E+02	.1078E+03	.1415E+02	-.1590E+03	.8183E+02	.0000E+00
GLoads	54	.5503E+02	-.7644E+01	-.1074E+03	.0000E+00	-.8732E+03	.1307E+03
			PLATE 35				
GLoads	39	.2559E+02	-.1785E+03	.7157E+02	-.2989E+02	-.1306E+03	.0000E+00
GLoads	40	-.2565E+02	.2178E+03	.1851E+03	-.4227E+02	-.3138E+03	.0000E+00
GLoads	56	-.2408E+02	.1465E+03	-.7986E+02	.5400E+02	-.2573E+03	.0000E+00
GLoads	55	.2413E+02	-.1858E+03	-.1768E+03	.1694E+02	-.6901E+02	.0000E+00
			PLATE 36				
GLoads	40	.9224E+01	-.1437E+03	.1535E+03	-.8139E+02	.2782E+03	.0000E+00
GLoads	41	-.9082E+01	.3773E+03	.1873E+03	-.1324E+03	-.4019E+03	.0000E+00
GLoads	57	-.9396E+01	.1065E+03	-.1451E+03	.8154E+02	-.4305E+03	.0000E+00
GLoads	56	.9254E+01	-.3401E+03	-.1958E+03	.1353E+03	.2678E+03	.0000E+00
			PLATE 37				
GLoads	41	-.1025E+02	-.3498E+02	.1911E+03	-.1368E+03	.4024E+03	.0000E+00
GLoads	42	.9339E+01	.4841E+03	.1465E+03	-.8186E+02	-.2626E+03	.0000E+00
GLoads	58	.9628E+01	-.4971E+01	-.1803E+03	.1252E+03	-.2708E+03	.0000E+00
GLoads	57	-.8720E+01	-.4442E+03	-.1572E+03	.7347E+02	.4250E+03	.0000E+00
			PLATE 38				
GLoads	42	-.2720E+02	.1079E+03	.2096E+03	-.5047E+02	.3026E+03	.0000E+00
GLoads	43	.2497E+02	.5074E+03	.5591E+02	-.3715E+02	.1542E+03	.0000E+00
GLoads	59	.2799E+02	-.1306E+03	-.1920E+03	.7167E+01	.1097E+03	.0000E+00
GLoads	58	-.2576E+02	-.4847E+03	-.7352E+02	.3146E+02	.2543E+03	.0000E+00
			PLATE 39				
GLoads	43	-.4927E+02	.2564E+03	.1551E+03	.8166E+02	-.1217E+03	.0000E+00
GLoads	44	.5094E+02	.4476E+03	-.2608E+02	.0000E+00	.8684E+03	-.1490E+03
GLoads	60	.4618E+02	-.2645E+03	-.1263E+03	.0000E+00	.8907E+03	.6418E+02
GLoads	59	-.4785E+02	-.4395E+03	-.2726E+01	-.1296E+03	-.1322E+03	.0000E+00
			PLATE 40				
GLoads	44	-.4320E+02	.4236E+03	.5817E+02	.1731E+03	-.1048E+04	.0000E+00
GLoads	45	.1316E+03	.2979E+03	-.5778E+02	.6742E+02	.1926E+03	.0000E+00
GLoads	61	.1501E+02	-.4262E+03	-.5621E+02	-.1509E+03	.1980E+03	.0000E+00
GLoads	60	-.1034E+03	-.2953E+03	.5582E+02	-.8104E+02	-.1071E+04	.0000E+00
			PLATE 41				
GLoads	45	.3804E+02	.5186E+03	.3221E+02	-.5953E+02	-.2692E+03	.0000E+00
GLoads	46	.1887E+03	.1780E+03	-.3441E+02	-.9785E+02	-.3003E+03	.0000E+00
GLoads	62	-.5552E+02	-.5069E+03	-.3234E+02	.8302E+02	-.2381E+03	.0000E+00
GLoads	61	-.1712E+03	-.1898E+03	.3454E+02	.2593E+02	-.2047E+03	.0000E+00
			PLATE 42				
GLoads	46	.1240E+03	.5413E+03	.1826E+02	-.1553E+03	.2094E+03	.0000E+00
GLoads	47	.1910E+03	.5931E+02	-.1924E+02	-.2502E+03	-.4734E+03	.0000E+00
GLoads	63	-.1287E+03	-.5162E+03	-.1759E+02	.1750E+03	-.5079E+03	.0000E+00

========== I M A G E S 3 D ==========
= Copyright (c) 1984 Celestial Software Inc. =
==========

SOLVE PLATE LOADS/STRESSES Version 2.0 07/01/90

L

Load Case 3:UBC SEISMIC LOAD - SN & WE DIR.

GLoads	Node	Fx	Fy	Fz	Mx	My	Mz
GLoads	62	-.1863E+03	-.8445E+02	.1858E+02	.2088E+03	.2133E+03	.0000E+00
			PLATE 43				
GLoads	47	.1601E+03	.4948E+03	.1431E+01	-.3062E+03	.4196E+03	.0000E+00
GLoads	48	.1859E+03	-.2999E+02	-.4465E+01	-.2788E+03	-.4708E+03	.0000E+00
GLoads	64	-.1641E+03	-.4719E+03	-.3954E-01	.3149E+03	-.4722E+03	.0000E+00
GLoads	63	-.1819E+03	.7056E+01	.3074E+01	.2033E+03	.4550E+03	.0000E+00
			PLATE 44				
GLoads	48	.1628E+03	.4145E+03	-.6612E+01	-.3018E+03	.4598E+03	.0000E+00
GLoads	49	.1710E+03	-.9687E+02	.6941E+01	-.2915E+03	-.3084E+03	.0000E+00
GLoads	65	-.1647E+03	-.3873E+03	.4351E+01	.3115E+03	-.3671E+03	.0000E+00
GLoads	64	-.1691E+03	.6968E+02	-.4680E+01	.2891E+03	.3869E+03	.0000E+00
			PLATE 45				
GLoads	49	.1526E+03	.3031E+03	-.2267E+02	-.3127E+03	.3230E+03	.0000E+00
GLoads	50	.1314E+03	-.1329E+03	.1552E+02	-.2774E+03	-.1129E+02	.0000E+00
GLoads	66	-.1565E+03	-.2790E+03	.2282E+02	.2301E+03	-.2955E+02	.0000E+00
GLoads	65	-.1275E+03	.1088E+03	-.1567E+02	.2027E+03	.2994E+03	.0000E+00
			PLATE 46				
GLoads	51	.9925E+02	.3266E+03	-.1724E+02	-.1159E+03	.3018E+03	.0000E+00
GLoads	52	.7722E+02	.1648E+02	.1308E+02	-.1657E+03	-.1354E+03	.0000E+00
GLoads	68	-.9744E+02	-.3006E+03	.1252E+02	.4421E+02	-.9513E+02	.0000E+00
GLoads	67	-.7903E+02	-.4250E+02	-.8366E+01	.1459E+03	.2786E+03	.0000E+00
			PLATE 47				
GLoads	52	.1163E+03	.2323E+03	-.3110E+02	-.2302E+01	.1215E+03	.0000E+00
GLoads	53	.3772E+02	-.4431E+02	.3183E+02	-.5034E+02	.2315E+03	.0000E+00
GLoads	69	-.1058E+03	-.2036E+03	.2555E+02	-.1953E+02	.2655E+03	.0000E+00
GLoads	68	-.4823E+02	.1566E+02	-.2628E+02	.8837E+02	.1657E+03	.0000E+00
			PLATE 48				
GLoads	53	.1238E+03	.1230E+03	-.4859E+02	.1172E+03	-.2460E+03	.0000E+00
GLoads	54	-.2871E+02	-.4275E+02	.4580E+02	.3616E+02	.8774E+03	.0000E+00
GLoads	70	-.1253E+03	-.1104E+03	.5029E+02	-.1606E+03	.8699E+03	.0000E+00
GLoads	69	.3015E+02	.3014E+02	-.4750E+02	-.5407E+02	-.1880E+03	.0000E+00
			PLATE 49				
GLoads	54	.5995E+02	-.2554E+02	-.2314E+02	.0000E+00	-.8378E+03	-.2061E+03
GLoads	55	-.4030E+02	.7530E+02	.9088E+02	.1775E+03	.8639E+02	.0000E+00
GLoads	71	-.4966E+02	.2084E+02	.4286E+01	.2035E+02	.1178E+03	.0000E+00
GLoads	70	.3001E+02	-.7059E+02	-.7202E+02	.0000E+00	-.7607E+03	-.2830E+02
			PLATE 50				
GLoads	55	.2742E+02	-.9378E+02	.3558E+02	-.3542E+02	-.9921E+02	.0000E+00
GLoads	56	-.2902E+02	.1878E+03	.1575E+03	-.5508E+02	-.2824E+03	.0000E+00
GLoads	72	-.3155E+02	.8627E+02	-.2644E+02	.1523E+02	-.3634E+03	.0000E+00
GLoads	71	.3316E+02	-.1803E+03	-.1666E+03	.3992E+02	-.1939E+03	.0000E+00
			PLATE 51				
GLoads	56	.7659E+01	-.9074E+02	.8194E+02	-.1342E+03	.2718E+03	.0000E+00

========== I M A G E S 3 D ==========
= Copyright (c) 1984 Celestial Software Inc. =
==========

SOLVE PLATE LOADS/STRESSES Version 2.0 07/01/90

L

Load Case 3:UBC SEISMIC LOAD - SN & WE DIR.

GLoads	Node	Fx	Fy	Fz	Mx	My	Mz
GLoads	57	-.9025E+01	.2609E+03	.1508E+03	-.8040E+02	-.4265E+03	.0000E+00
GLoads	73	-.8217E+01	.6947E+02	-.6777E+02	.1326E+03	-.4013E+03	.0000E+00
GLoads	72	.9584E+01	-.2396E+03	-.1650E+03	.5202E+02	.2887E+03	.0000E+00
			PLATE 52				
GLoads	57	-.9047E+01	-.1970E+02	.1153E+03	-.7461E+02	.4319E+03	.0000E+00
GLoads	58	.9906E+01	.3028E+03	.9667E+02	-.1178E+03	-.2612E+03	.0000E+00
GLoads	74	.1109E+02	-.1960E+01	-.8846E+02	.7429E+02	-.2539E+03	.0000E+00
GLoads	73	-.1195E+02	-.2812E+03	-.1235E+03	.1371E+03	.4086E+03	.0000E+00
			PLATE 53				
GLoads	58	-.2996E+02	.9038E+02	.1210E+03	-.3882E+02	.2777E+03	.0000E+00
GLoads	59	.3011E+02	.3181E+03	.2171E+02	-.2089E+02	.1382E+03	.0000E+00
GLoads	75	.3223E+02	-.1156E+03	-.8504E+02	.3355E+02	.2067E+03	.0000E+00
GLoads	74	-.3237E+02	-.2930E+03	-.5768E+02	.2928E+02	.3437E+03	.0000E+00
			PLATE 54				
GLoads	59	-.4643E+02	.1554E+03	.1368E+03	.1433E+03	-.1157E+03	.0000E+00
GLoads	60	.5303E+02	.2770E+03	-.4488E+02	.0000E+00	.8949E+03	-.1272E+03
GLoads	76	.4716E+02	-.1465E+03	-.1368E+03	.0000E+00	.8711E+03	.7690E+02
GLoads	75	-.5376E+02	-.2859E+03	.4490E+02	-.4842E+02	-.9734E+02	.0000E+00
			PLATE 55				
GLoads	60	-.4323E+02	.2667E+03	.6629E+02	.1815E+03	-.1020E+04	.0000E+00
GLoads	61	.1130E+03	.1790E+03	-.4910E+02	.2157E+03	.2037E+03	.0000E+00
GLoads	77	.3030E+02	-.2802E+03	-.5955E+02	.2777E+02	.1577E+03	.0000E+00
GLoads	76	-.1001E+03	-.1654E+03	.4236E+02	-.4677E+02	-.9890E+03	.0000E+00
			PLATE 56				
GLoads	61	.7734E+01	.3426E+03	.3536E+02	-.9074E+02	-.1970E+03	.0000E+00
GLoads	62	.1354E+03	.1262E+03	-.3749E+02	-.3827E+02	-.2300E+03	.0000E+00
GLoads	78	-.3385E+02	-.3338E+03	-.3762E+02	.8526E+02	-.3801E+03	.0000E+00
GLoads	77	-.1093E+03	-.1350E+03	.3976E+02	-.3278E+01	-.3321E+03	.0000E+00
			PLATE 57				
GLoads	62	.7100E+02	.3707E+03	.1584E+02	-.2535E+03	.2548E+03	.0000E+00
GLoads	63	.1466E+03	.4120E+02	-.1836E+02	-.9374E+02	-.4584E+03	.0000E+00
GLoads	79	-.9838E+02	-.3568E+03	-.1653E+02	.2557E+03	-.5185E+03	.0000E+00
GLoads	78	-.1192E+03	-.5510E+02	.1905E+02	.3630E+02	.1929E+03	.0000E+00
			PLATE 58				
GLoads	63	.1286E+03	.3735E+03	-.2538E+01	-.2845E+03	.5113E+03	.0000E+00
GLoads	64	.1446E+03	-.3852E+02	-.6255E+01	-.2213E+03	-.3882E+03	.0000E+00
GLoads	80	-.1537E+03	-.3578E+03	.6012E+01	.1894E+03	-.5203E+03	.0000E+00
GLoads	79	-.1195E+03	.2283E+02	.2781E+01	.1230E+03	.3935E+03	.0000E+00
			PLATE 59				
GLoads	64	.1531E+03	.3463E+03	-.2444E+02	-.3827E+03	.4734E+03	.0000E+00
GLoads	65	.1339E+03	-.7904E+02	.5456E+01	-.2342E+03	-.1770E+03	.0000E+00
GLoads	81	-.1739E+03	-.3372E+03	.3537E+02	.2065E+03	-.1549E+03	.0000E+00

K-2-4-PRINT

========== I M A G E S 3 D ==========
= Copyright (c) 1984 Celestial Software Inc. =
==========

SOLVE PLATE LOADS/STRESSES Version 2.0 07/01/90

L

Load Case 3:UBC SEISMIC LOAD - SN & WE DIR.

GLoads	Node	Fx	Fy	Fz	Mx	My	Mz
GLoads	80	-.1131E+03	.7001E+02	-.1639E+02	-.7210E+01	.4777E+03	.0000E+00
			PLATE 60				
GLoads	65	.1229E+03	.2631E+03	-.2954E+02	-.2800E+03	.2447E+03	.0000E+00
GLoads	66	.1051E+03	-.8661E+02	.8242E+01	-.3010E+03	.9680E+02	.0000E+00
GLoads	82	-.1121E+03	-.2442E+03	.3569E+02	.4937E+02	.1675E+03	.0000E+00
GLoads	81	-.1159E+03	.6767E+02	-.1439E+02	.6303E+02	.1574E+03	.0000E+00
			PLATE 61				
GLoads	67	.1968E+02	.2341E+03	-.2272E+02	-.1361E+03	.1184E+03	.0000E+00
GLoads	68	.8239E+02	.1526E+02	.2710E+01	-.2601E+03	-.1046E+03	.0000E+00
GLoads	84	-.7361E+01	-.2207E+03	.1908E+02	-.1527E+03	.1093E+03	.0000E+00
GLoads	83	-.9471E+02	-.2868E+02	.9225E+00	-.1350E+01	.1748E+03	.0000E+00
			PLATE 62				
GLoads	68	.2738E+02	.1739E+03	-.2485E+02	.1275E+03	.3402E+02	.0000E+00
GLoads	69	.4940E+02	.9995E+01	.2614E+02	-.1518E+03	.1599E+03	.0000E+00
GLoads	85	.5228E+01	-.1645E+03	.2036E+02	-.1303E+03	.2830E+03	.0000E+00
GLoads	84	-.8201E+02	-.1940E+02	-.2165E+02	.1903E+03	.1586E+03	.0000E+00
			PLATE 63				
GLoads	69	-.9648E+01	.6779E+02	-.4008E+02	.2254E+03	-.2373E+03	.0000E+00
GLoads	70	.1633E+02	.4448E+02	.5809E+02	.1361E+03	.7848E+03	.0000E+00
GLoads	86	.1312E+03	-.5793E+02	.2430E+02	.5394E+01	.6677E+03	.0000E+00
GLoads	85	-.1379E+03	-.5433E+02	-.4230E+02	.1281E+03	-.8929E+02	.0000E+00
			PLATE 64				
GLoads	70	.3291E+02	-.1472E+02	-.8542E+02	.0000E+00	-.8221E+03	.1083E+03
GLoads	71	-.5223E+02	.1217E+03	.1757E+03	.3966E+01	.1314E+03	.0000E+00
GLoads	87	-.4272E+02	.3850E+02	.1766E+03	-.1627E+03	.1528E+02	.0000E+00
GLoads	86	.6204E+02	-.1455E+03	-.2669E+03	.0000E+00	-.7962E+03	.2642E+03
			PLATE 65				
GLoads	71	.2802E+02	-.7084E+02	-.5407E+02	-.6423E+02	-.5519E+02	.0000E+00
GLoads	72	-.2351E+02	.1122E+03	.1521E+03	.5992E+02	-.2879E+03	.0000E+00
GLoads	88	-.2615E+01	.6170E+02	.7210E+02	.1586E+03	-.1717E+03	.0000E+00
GLoads	87	-.1897E+01	-.1031E+03	-.1701E+03	-.3019E+02	.1099E+03	.0000E+00
			PLATE 66				
GLoads	72	.4761E+01	-.6741E+02	-.1370E+01	-.1272E+03	.3626E+03	.0000E+00
GLoads	73	-.9283E+01	.1512E+03	.1186E+03	-.1226E+03	-.3869E+03	.0000E+00
GLoads	89	-.1147E+01	.5678E+02	.5869E+01	.7087E+02	-.3750E+03	.0000E+00
GLoads	88	.5668E+01	-.1406E+03	-.1231E+03	.5458E+02	.2377E+03	.0000E+00
			PLATE 67				
GLoads	73	-.1126E+02	-.4811E+02	.3195E+02	-.1470E+03	.3796E+03	.0000E+00
GLoads	74	.3540E+01	.1732E+03	.8940E+02	-.1434E+03	-.3272E+03	.0000E+00
GLoads	90	.3092E+01	.4204E+02	-.1663E+02	.3680E+02	-.2686E+03	.0000E+00
GLoads	89	.4627E+01	-.1672E+03	-.1047E+03	.4129E+02	.3191E+03	.0000E+00
			PLATE 68				
GLoads	74	-.2297E+02	.1311E+02	.1604E+02	.3981E+02	.2374E+03	.0000E+00

========== I M A G E S 3 D ==========
= Copyright (c) 1984 Celestial Software Inc. =
==========

SOLVE PLATE LOADS/STRESSES Version 2.0 07/01/90

L

Load Case 3:UBC SEISMIC LOAD - SN & WE DIR.

GLoads	Node	Fx	Fy	Fz	Mx	My	Mz
GLoads	75	.2562E+02	.1331E+03	.5179E+02	-.7166E+02	.7259E+02	.0000E+00
GLoads	91	-.2075E+01	-.1279E+02	.4378E+02	-.2520E+02	-.4946E+02	.0000E+00
GLoads	90	-.5695E+00	-.1334E+03	-.1116E+03	.1298E+03	.1043E+03	.0000E+00
			PLATE 69				
GLoads	75	-.4480E+02	.1597E+03	-.5236E+02	.8653E+02	-.1819E+03	.0000E+00
GLoads	76	.4267E+02	.9168E+02	-.1420E+01	.0000E+00	.8451E+03	-.3660E+02
GLoads	92	.2902E+02	-.1871E+03	.2396E+03	.0000E+00	.6521E+03	.1207E+03
GLoads	91	-.2689E+02	-.6433E+02	-.1858E+03	-.6111E+02	-.2041E+03	.0000E+00
			PLATE 70				
GLoads	76	-.4410E+02	.1281E+03	.4260E+02	-.6300E+02	-.9197E+03	.0000E+00
GLoads	77	.3444E+02	.1394E+03	-.5092E+02	.1283E+03	.2804E+03	.0000E+00
GLoads	93	-.3042E+02	-.1219E+03	-.3519E+02	-.4832E+02	.1623E+03	.0000E+00
GLoads	92	.4007E+02	-.1456E+03	.4351E+02	-.2458E+03	-.8290E+03	.0000E+00
			PLATE 71				
GLoads	77	.4680E+01	.1695E+03	.3088E+02	-.1528E+03	-.1060E+03	.0000E+00
GLoads	78	.4893E+02	.6760E+02	-.2817E+02	.1344E+03	-.1877E+03	.0000E+00
GLoads	94	-.6003E+02	-.1648E+03	-.1543E+01	.2157E+03	-.1440E+03	.0000E+00
GLoads	93	.6416E+01	-.7233E+02	-.1165E+01	-.1228E+03	-.1294E+02	.0000E+00
			PLATE 72				
GLoads	78	.6427E+02	.2151E+03	.6908E+01	-.2560E+03	.3749E+03	.0000E+00
GLoads	79	.5427E+02	-.6848E+01	-.1660E+02	-.6297E+02	-.3650E+03	.0000E+00
GLoads	95	-.1034E+03	-.2081E+03	.3204E+01	.1236E+03	-.4254E+03	.0000E+00
GLoads	94	-.1510E+02	-.1516E+00	.6485E+01	-.7113E+02	.2124E+03	.0000E+00
			PLATE 73				
GLoads	79	.1238E+03	.2346E+03	-.9487E+01	-.3158E+03	.4900E+03	.0000E+00
GLoads	80	.3696E+02	-.6783E+02	-.9262E+01	-.1354E+03	-.4326E+03	.0000E+00
GLoads	96	-.1602E+03	-.2237E+03	.1292E+02	.4287E+02	-.3844E+03	.0000E+00
GLoads	95	-.5306E+00	.5692E+02	.5829E+01	-.1073E+03	.3825E+03	.0000E+00
			PLATE 74				
GLoads	80	.1900E+03	.2494E+03	-.2020E+02	-.4674E+02	.4752E+03	.0000E+00
GLoads	81	.1001E+02	-.1221E+03	.3367E+02	.1924E+03	-.1016E+03	.0000E+00
GLoads	97	-.2539E+03	-.2405E+03	-.1832E+02	.1607E+03	-.3597E+03	.0000E+00
GLoads	96	.5393E+02	.1132E+03	.4847E+01	.6411E+02	.2189E+03	.0000E+00
			PLATE 75				
GLoads	81	.2400E+03	.2854E+03	-.9448E+02	-.4619E+03	.9912E+02	.0000E+00
GLoads	82	-.6350E+01	-.1272E+03	-.5493E+02	-.1316E+04	.6695E+03	.0000E+00
GLoads	98	-.3842E+03	-.2964E+03	.1776E+03	-.1613E+04	.8898E+03	.0000E+00
GLoads	97	.1505E+03	.1383E+03	-.2818E+02	-.7180E+03	.2020E+03	.0000E+00
			PLATE 76				
GLoads	83	-.1853E+02	.1238E+03	-.1708E+02	-.1621E+03	-.2485E+03	.0000E+00
GLoads	84	.5523E+02	.5784E+02	-.3600E+02	-.1863E+03	-.1105E+03	.0000E+00
GLoads	100	.9560E+01	-.1021E+03	-.2561E+02	-.2656E+03	-.1480E+03	.0000E+00

========== I M A G E S 3 D ==========
= Copyright (c) 1984 Celestial Software Inc. =
==========

SOLVE PLATE LOADS/STRESSES Version 2.0 07/01/90

L

Load Case 3:UBC SEISMIC LOAD - SN & WE DIR.

GLoads	Node	Fx	Fy	Fz	Mx	My	Mz
GLoads	99	-.4626E+02	-.7953E+02	.7869E+02	-.2617E+03	-.3351E+03	.0000E+00
				PLATE 77			
GLoads	84	.2235E+01	.9712E+02	.6662E+01	.1488E+03	-.1574E+03	.0000E+00
GLoads	85	.7519E+02	-.6512E+01	.6352E+01	-.1074E+02	-.4611E+02	.0000E+00
GLoads	101	-.2839E+02	-.8697E+02	-.2620E+02	-.2479E+02	.3092E+02	.0000E+00
GLoads	100	-.4904E+02	-.3641E+01	.1319E+02	.1015E+03	-.9871E+02	.0000E+00
				PLATE 78			
GLoads	85	.2560E+02	.1403E+03	-.1632E+02	.1291E+02	-.1476E+03	.0000E+00
GLoads	86	.1444E+03	-.6101E+02	-.2814E+02	-.3418E+03	.1123E+03	.0000E+00
GLoads	102	-.1259E+03	-.1443E+03	.3310E+02	-.3863E+03	.1429E+03	.0000E+00
GLoads	101	-.4419E+02	.6504E+02	.1136E+02	-.1819E+02	-.3981E+02	.0000E+00
				PLATE 79			
GLoads	86	.1531E+03	.9625E+02	-.1323E+03	.0000E+00	-.4291E+03	-.9712E+03
GLoads	87	.1097E+02	-.4696E+02	.2100E+02	.4218E+03	-.1281E+03	.0000E+00
GLoads	103	-.8996E+02	-.7157E+02	.3042E+02	.0000E+00	-.2615E+03	-.3872E+03
GLoads	102	-.7406E+02	.2228E+02	.8092E+02	.0000E+00	-.4058E+03	-.9262E+03
				PLATE 80			
GLoads	87	-.2542E+01	.1504E+02	-.6370E+02	-.2289E+03	.2851E+01	.0000E+00
GLoads	88	-.3259E+02	-.1506E+02	.2857E+02	-.9025E+02	-.1514E+03	.0000E+00
GLoads	104	-.3190E+02	-.2233E+02	.3295E+02	.0000E+00	-.4803E+03	.8190E+02
GLoads	103	.6704E+02	.2236E+02	.2180E+01	.0000E+00	-.3708E+03	.1786E+03
				PLATE 81			
GLoads	88	-.6651E+01	-.2543E+01	-.1375E+02	-.1229E+03	.8545E+02	.0000E+00
GLoads	89	-.1579E+02	.3245E+02	.4333E+02	-.5038E+02	-.1371E+03	.0000E+00
GLoads	105	.2718E+01	-.9578E+00	.9508E+01	.0000E+00	-.1669E+03	.7255E+02
GLoads	104	.1972E+02	-.2895E+02	-.3909E+02	.0000E+00	.1600E+02	.1245E+03
				PLATE 82			
GLoads	89	-.2388E+02	-.1855E+02	.1933E+02	-.6178E+02	.1931E+03	.0000E+00
GLoads	90	-.1169E+01	.5207E+02	.4622E+02	-.1248E+03	-.1511E+02	.0000E+00
GLoads	106	.4209E+02	.1770E+02	-.2687E+02	.0000E+00	.1491E+03	.1359E+03
GLoads	105	-.1705E+02	-.5122E+02	-.3868E+02	.0000E+00	.3072E+03	.9078E+02
				PLATE 83			
GLoads	90	-.3754E+02	-.5717E+02	.4583E+02	-.4174E+02	.1794E+03	.0000E+00
GLoads	91	.1908E+02	.6104E+02	.7175E+02	-.1010E+03	.1345E+03	.0000E+00
GLoads	107	.7343E+02	.6412E+02	-.9264E+02	.0000E+00	.5538E+03	.9194E+02
GLoads	106	-.5497E+02	-.6799E+02	-.2493E+02	.0000E+00	.5663E+03	.6996E+02
				PLATE 84			
GLoads	91	-.2630E+02	-.8042E+02	.3407E+02	.1873E+03	.1191E+03	.0000E+00
GLoads	92	.7341E+02	.1479E+03	.1529E+03	.0000E+00	.4868E+03	-.2826E+03
GLoads	108	.4540E+02	.5121E+02	-.1852E+03	.0000E+00	.7569E+03	-.1967E+03
GLoads	107	-.9251E+02	-.1187E+03	-.1811E+01	.0000E+00	.4788E+03	-.1107E+03
				PLATE 85			
GLoads	92	.2902E+02	.6150E+02	.1238E+03	.6574E+03	-.4778E+03	.0000E+00

========== I M A G E S 3 D ==========
= Copyright (c) 1984 Celestial Software Inc. =
==========

SOLVE PLATE LOADS/STRESSES Version 2.0 07/01/90

L

Load Case 3:UBC SEISMIC LOAD - SN & WE DIR.

GLoads	Node	Fx	Fy	Fz	Mx	My	Mz
GLoads	93	-.4455E+02	.5857E+02	-.9263E+01	.3776E+03	-.7257E+02	.0000E+00
GLoads	109	-.2401E+02	-.4167E+02	-.1028E+03	.2905E+03	-.4342E+03	.0000E+00
GLoads	108	.3954E+02	-.7839E+02	-.1166E+02	.5640E+03	-.7158E+03	.0000E+00
				PLATE 86			
GLoads	93	.3315E+02	.4124E+02	.1020E+02	-.2064E+03	-.7677E+02	.0000E+00
GLoads	94	-.8597E+01	.1623E+02	-.4014E+02	-.7740E+01	-.1304E+03	.0000E+00
GLoads	110	-.3019E+02	-.4294E+02	-.5223E+02	-.6824E+02	-.6075E+03	.0000E+00
GLoads	109	.5644E+01	-.1453E+02	.8216E+02	-.2114E+03	-.5863E+03	.0000E+00
				PLATE 87			
GLoads	94	.4831E+02	.5430E+02	-.2154E+00	-.1368E+03	.6190E+02	.0000E+00
GLoads	95	-.4499E+01	.3752E+01	-.2369E+02	.3244E+02	-.1555E+03	.0000E+00
GLoads	111	-.4922E+02	-.5142E+02	-.1653E+02	-.8566E+02	-.3403E+03	.0000E+00
GLoads	110	.5408E+01	-.6633E+01	.4044E+02	-.2044E+03	-.1762E+03	.0000E+00
				PLATE 88			
GLoads	95	.7306E+02	.5298E+02	-.2075E+02	-.4880E+02	.1985E+03	.0000E+00
GLoads	96	-.2417E+02	-.4248E+01	-.1010E+02	-.5060E+02	-.4572E+02	.0000E+00
GLoads	112	-.7116E+02	-.4893E+02	.2800E+02	-.2160E+03	-.3223E+02	.0000E+00
GLoads	111	.2228E+02	.1975E+00	.2843E+01	-.1936E+03	.1511E+03	.0000E+00
				PLATE 89			
GLoads	96	.9506E+02	.2029E+02	-.4308E+02	-.5639E+02	.2112E+03	.0000E+00
GLoads	97	-.7742E+02	-.1372E+02	-.4318E+01	-.1587E+03	-.3895E+01	.0000E+00
GLoads	113	-.7029E+02	-.5474E+01	.8502E+02	-.3274E+03	.4573E+03	.0000E+00
GLoads	112	.5265E+02	-.1096E+01	-.3762E+02	-.2397E+03	.5594E+03	.0000E+00
				PLATE 90			
GLoads	97	.1454E+03	.2156E+02	.1541E+02	.7160E+03	.1616E+03	.0000E+00
GLoads	98	-.1629E+03	.7999E+02	.2049E+03	.1397E+04	.5444E+03	.0000E+00
GLoads	114	-.6198E+02	-.6094E+02	-.1097E+03	.1099E+04	.4812E+03	.0000E+00
GLoads	113	.7949E+02	-.4061E+02	-.1106E+03	.4240E+03	.2564E+03	.0000E+00
				PLATE 91			
GLoads	122	.4879E+03	.1478E+04	.6745E+02	.5678E+03	.1206E+03	.0000E+00
GLoads	2	.1012E+02	.6658E+03	.4605E+02	.5413E+03	.5660E+02	.0000E+00
GLoads	19	-.3730E+03	-.1214E+04	-.4663E+02	.6753E+03	-.1425E+03	.0000E+00
GLoads	124	-.1250E+03	-.9304E+03	-.6688E+02	.7128E+03	-.4625E+02	.0000E+00
				PLATE 92			
GLoads	124	.1024E+03	.1004E+04	.3695E+02	.1506E+03	.1705E+03	.0000E+00
GLoads	19	.1836E+03	.5630E+03	.2187E+02	.1554E+03	-.2289E+02	.0000E+00
GLoads	35	-.1477E+03	-.8776E+03	-.2066E+02	.4788E+03	-.1696E+03	.0000E+00
GLoads	126	-.1383E+03	-.6895E+03	-.3817E+02	.5093E+03	.4635E+02	.0000E+00
				PLATE 93			
GLoads	126	.1038E+03	.7145E+03	.8394E+01	-.1633E+03	.1659E+03	.0000E+00
GLoads	35	.1153E+03	.3934E+03	.4064E+01	-.1147E+03	-.8507E+02	.0000E+00
GLoads	51	-.1236E+03	-.6344E+03	-.4594E+01	.2744E+03	-.1694E+03	.0000E+00

KAISER ENGINEERS HANFORD S/N:801854 02/22/95
PAGE 127 Run ID=MN61973 08:50:50

========== I M A G E S 3 D ==========
= Copyright (c) 1984 Celestial Software Inc. =
==========

SOLVE PLATE LOADS/STRESSES Version 2.0 07/01/90

L

Load Case 3:UBC SEISMIC LOAD - SN & WE DIR.

GLoads	Node	Fx	Fy	Fz	Mx	My	Mz
GLoads	128	-.9543E+02	-.4735E+03	-.7864E+01	.2777E+03	.7800E+02	.0000E+00
			PLATE 94				
GLoads	128	.6516E+02	.4743E+03	-.2178E+02	-.4067E+03	.1331E+03	.0000E+00
GLoads	51	.8550E+02	.2653E+03	-.7563E+01	-.2977E+03	-.7953E+02	.0000E+00
GLoads	67	-.8179E+02	-.4310E+03	.1857E+02	.6299E+02	-.3585E+01	.0000E+00
GLoads	130	-.6887E+02	-.3085E+03	.1077E+02	-.4056E+01	.1701E+03	.0000E+00
			PLATE 95				
GLoads	130	.3158E+02	.2935E+03	-.4585E+02	-.7132E+03	-.2771E+02	.0000E+00
GLoads	67	.9150E+02	.1270E+03	-.4019E+02	-.6604E+03	-.7044E+02	.0000E+00
GLoads	83	-.3857E+02	-.2962E+03	.1834E+02	-.4847E+03	-.1384E+03	.0000E+00
GLoads	132	-.8451E+02	-.1243E+03	.6770E+02	-.5079E+03	-.2004E+03	.0000E+00
			PLATE 96				
GLoads	132	.5380E+02	.1160E+03	-.1014E+03	-.5100E+03	.1433E+03	.0000E+00
GLoads	83	.6315E+02	.8388E+02	-.4526E+02	-.5917E+03	.2994E+03	.0000E+00
GLoads	99	-.8601E+02	-.1804E+03	.1531E+03	-.7223E+03	.9402E+03	.0000E+00
GLoads	134	-.3094E+02	-.1952E+02	-.6437E+01	-.5965E+03	.7744E+03	.0000E+00
			PLATE 97				
GLoads	17	.1135E+03	.6825E+02	.7117E+02	.6576E+03	.9959E+02	.0000E+00
GLoads	123	.1962E+03	-.4168E+03	.8481E+02	.8523E+03	.5442E+02	.0000E+00
GLoads	125	-.1296E+03	.7613E+02	-.7584E+02	.1051E+04	.1047E+02	.0000E+00
GLoads	34	-.1801E+03	.2724E+03	-.8014E+02	.8703E+03	.1491E+02	.0000E+00
			PLATE 98				
GLoads	34	.1274E+03	.8656E+02	.2282E+02	.6192E+02	.1512E+03	.0000E+00
GLoads	125	.1018E+03	-.2338E+03	.4645E+02	.2039E+03	.8911E+02	.0000E+00
GLoads	127	-.1161E+03	-.1820E+02	-.2838E+02	.6858E+03	.4332E+02	.0000E+00
GLoads	50	-.1131E+03	.1655E+03	-.4089E+02	.5724E+03	.7785E+02	.0000E+00
			PLATE 99				
GLoads	50	.9350E+02	.1208E+03	-.2705E+02	-.4020E+03	.1784E+03	.0000E+00
GLoads	127	.8376E+02	-.1118E+03	-.4100E-01	-.4397E+03	.1583E+03	.0000E+00
GLoads	129	-.8240E+02	-.8320E+02	.4024E+02	.8617E+02	.2367E+03	.0000E+00
GLoads	66	-.9486E+02	.7419E+02	-.1314E+02	.1595E+03	.2304E+03	.0000E+00
			PLATE 100				
GLoads	66	.9991E+02	.1535E+03	-.6645E+02	-.7139E+03	.4386E+02	.0000E+00
GLoads	129	.5084E+02	-.2948E+02	-.6747E+02	-.1092E+04	.1546E+03	.0000E+00
GLoads	131	-.1228E+03	-.1363E+03	.7904E+02	-.8002E+03	.8972E+02	.0000E+00
GLoads	82	-.2796E+02	.1231E+02	.5488E+02	-.3406E+03	-.5674E+02	.0000E+00
			PLATE 101				
GLoads	82	.8244E+02	.2088E+03	-.8456E+02	-.1777E+04	-.8194E+03	.0000E+00
GLoads	131	.8647E+02	-.2213E+01	-.1210E+03	-.8014E+03	-.3838E+03	.0000E+00
GLoads	133	.2446E+02	-.2300E+03	-.2903E+02	-.9822E+03	-.6892E+03	.0000E+00
GLoads	98	-.1934E+03	.2346E+02	.2345E+03	-.2091E+04	-.1107E+04	.0000E+00
			PLATE 102				
GLoads	98	-.1288E+03	.2532E+02	.2123E+03	.1599E+04	-.3809E+03	.0000E+00

KAISER ENGINEERS HANFORD S/N:801854 02/22/95
PAGE 128 Run ID=MN61973 08:50:51

========== I M A G E S 3 D ==========
= Copyright (c) 1984 Celestial Software Inc. =
==========

SOLVE PLATE LOADS/STRESSES Version 2.0 07/01/90

L

Load Case 3:UBC SEISMIC LOAD - SN & WE DIR.

GLoads	Node	Fx	Fy	Fz	Mx	My	Mz
GLoads	133	-.5287E+02	.1683E+03	.5826E+01	.4982E+03	-.1461E+03	.0000E+00
GLoads	135	.3565E+02	-.1848E+02	-.2744E+02	.2298E+03	.1378E+03	.0000E+00
GLoads	114	.1460E+03	-.1752E+03	-.1907E+03	.1273E+04	-.4300E+02	.0000E+00

KAISER ENGINEERS HANFORD S/N:801854 02/22/95
PAGE 129 Run ID=MN61973 08:50:51

========== I M A G E S 3 D ==========
= Copyright (c) 1984 Celestial Software Inc. =
==========

SOLVE PLATE LOADS/STRESSES Version 2.0 07/01/90

L

Load Case 3:UBC SEISMIC LOAD - SN & WE DIR.

MAXIMUM STRESS SUMMARY FOR PLATES
WITHIN SPECIFIED RANGE 1- 102

Maximum (absolute) Stress = .3490E+03 at Plate 40

Plate	Sigma X	Sigma Y	Tau XY	Von Mises
40	.3490E+03	.4588E+02	.1494E+01	.3284E+03

KAISER ENGINEERS HANFORD S/N:801854 02/22/95
PAGE 130 Run ID=MN61973 08:50:51

========== I M A G E S 3 D ==========
= Copyright (c) 1984 Celestial Software Inc. =
==========

SOLVE REACTIONS Version 2.0 07/01/90

L

Load Case 3:UBC SEISMIC LOAD - SN & WE DIR.

REACTIONS

Node	Fx	Fy	Fz	Mx	My	Mz
1	.2212E+02	-.7145E+02	.8077E+02	.0000E+00	.0000E+00	.0000E+00
2	.3342E+03	.1597E+04	.8280E+02	.0000E+00	.1013E+04	-.1100E+03
3	.2490E+03	.4353E+03	.2039E+02	.0000E+00	.1988E+03	.0000E+00
4	.1787E+03	-.1755E+03	.2648E+01	.0000E+00	.1752E+03	.0000E+00
5	.2329E+03	-.1297E+04	.2687E+03	.3057E+03	.1534E+03	-.2424E+03
6	.4680E+01	-.3238E+03	.2470E+03	.0000E+00	-.1297E+03	.0000E+00
7	.3215E+02	.1846E+03	.3319E+03	.0000E+00	-.1173E+03	.0000E+00
8	.3359E+02	.5242E+03	.3663E+03	.0000E+00	.1801E+01	.0000E+00
9	.3089E+02	.8496E+03	.3981E+03	.0000E+00	.1222E+03	.0000E+00
10	.5008E+01	.1343E+04	.3734E+03	.0000E+00	.1276E+03	.0000E+00
11	.5230E+03	.3077E+04	.4996E+03	.6264E+03	-.6709E+03	-.1060E+04
12	.3452E+03	.1397E+04	.1358E+01	.0000E+00	-.2590E+03	.0000E+00
13	.3788E+03	.9838E+03	.3357E+02	.0000E+00	-.2936E+03	.0000E+00
14	.3571E+03	.7556E+03	.4098E+02	.0000E+00	-.1950E+03	.0000E+00
15	.3305E+03	.5520E+03	.4850E+02	.0000E+00	-.5773E+02	.0000E+00
16	.2971E+03	.3403E+03	.3738E+02	.0000E+00	.4816E+02	.0000E+00
17	.2674E+03	.1067E+02	.1389E+03	.0000E+00	.6128E+03	-.8004E+02
18	.1903E+02	-.4880E+01	.3094E+01	.0000E+00	.0000E+00	.0000E+00
115	.6775E+04	.0000E+00	.8001E+04	.0000E+00	.0000E+00	.0000E+00
116	.3623E+04	.1041E+05	.7790E+03	.0000E+00	.0000E+00	.0000E+00
117	.7876E+03	.1041E+05	.3615E+04	.0000E+00	.0000E+00	.0000E+00
118	.1830E+04	.7962E+04	.7821E+03	.0000E+00	.0000E+00	.0000E+00
119	.7845E+03	.7964E+04	.1822E+04	.0000E+00	.0000E+00	.0000E+00
122	.5110E+03	.2030E+04	.8778E+02	.0000E+00	.7535E+03	-.1521E+03
123	.2155E+03	-.5116E+03	.1052E+03	.0000E+00	.3173E+03	-.8598E+02

```
============== I M A G E S  3 D ==============
= Copyright (c) 1984   Celestial Software Inc. =
===============================================

SOLVE BEAM LOADS/STRESSES    Version 2.0  07/01/90

L

Load Case  4:UBC SEISMIC LOAD - SN & EW DIR.

                    BEAM LOADS AND/OR STRESSES

GLoads Node      Fx          Fy          Fz          Mx          My          Mz
LLoads Node    Axial       Y-Shear     Z-Shear     Torsion   Y-Bending   Z-Bending
Stress Node    Axial       Y-Shear     Z-Shear     Torsion   Y-Bending   Z-Bending
Stress Node  Maximum     Minimum   Cmb. Shear
------ ---- ---------   ---------   ---------   ---------   ---------   ---------
                          ***BEAM  NO.    1***
GLoads    1  .1970E+02  .3143E+03 -.1386E+03 -.1421E-12 -.2842E-13  .0000E+00
GLoads   99  .3478E+02 -.1690E+03  .8412E+02 -.1407E+04  .4149E+03  .9957E+03
LLoads    1  .3435E+03  .7042E+01 -.1970E+02 -.2624E-13  .1093E-13  .1421E-12
LLoads   99 -.1884E+03 -.1263E+02 -.3478E+02  .8743E-14 -.1079E+04  .1407E+04
                          ***BEAM  NO.    2***
GLoads   18  .2130E+02  .1990E+03  .2827E+02 -.2274E-12 -.2842E-13  .1137E-12
GLoads  114  .3196E+02 -.5698E+02 -.8153E+02  .1360E+04 -.2452E+03  .7035E+03
LLoads   18  .1972E+03 -.3879E+02  .2130E+02  .1057E-13  .1167E-12 -.2274E-12
LLoads  114 -.8064E+02 -.5824E+02  .3196E+02 -.2320E-13  .7450E+03  .1360E+04
                          ***BEAM  NO.    3***
GLoads   99 -.1291E+03  .2029E+02  .3627E+03 -.1244E+04 -.4692E+03 -.3908E+03
GLoads  108  .1678E+03  .8297E+02 -.4014E+03 -.1671E+04 -.1388E+04 -.8940E+03
LLoads   99 -.3839E+03 -.2029E+02 -.2817E+02 -.1441E+03  .4692E+03  .1296E+04
LLoads  108  .4350E+03 -.8297E+02  .8363E+01  .1441E+03  .1388E+04  .1889E+04
                          ***BEAM  NO.    4***
GLoads  114  .1996E+03  .7122E+02 -.1821E+03 -.1340E+04  .1071E+04 -.1237E+04
GLoads  102 -.1500E+03  .6098E+02  .1325E+03  .8640E+03  .8699E+03  .7711E+03
LLoads  114 -.2697E+03 -.7122E+02  .1530E+02  .5312E+02 -.1071E+04 -.1823E+04
LLoads  102  .1996E+03 -.6098E+02 -.1454E+02 -.5312E+02 -.8699E+03  .1157E+04
                          ***BEAM  NO.    5***
GLoads   98 -.8068E+03  .6914E+02  .9489E+03 -.1633E+04  .9997E+03 -.1180E+04
GLoads  115  .8433E+03  .2806E+02 -.9853E+03  .1539E+03  .5230E+03 -.1138E+03
LLoads   98  .1245E+04 -.6914E+02  .1763E+02  .1870E+03 -.9997E+03 -.2006E+04
LLoads  115 -.1297E+04 -.2806E+02 -.1420E+02 -.1870E+03 -.5230E+03  .4088E+02
                          ***BEAM  NO.    6***
GLoads   92  .2086E+02  .4284E+02  .1573E+03 -.5745E+03 -.2673E+04  .2461E+03
GLoads  115  .8568E+01  .3564E+02 -.1868E+03  .3154E+03 -.1701E+04 -.1453E+03
LLoads   92  .1542E+03 -.4284E+02 -.3758E+02  .2112E+02  .2673E+04 -.6247E+03
LLoads  115 -.1710E+03 -.3564E+02  .7567E+02 -.2112E+02  .1701E+04  .3466E+03
                          ***BEAM  NO.    7***
GLoads   86 -.3609E+03  .3422E+02  .1232E+03  .3106E+03  .2865E+04  .3843E+03
GLoads  115  .3743E+03  .1335E+01 -.1366E+03  .3473E+02  .1218E+04  .7617E+02
LLoads   86 -.3627E+03 -.3422E+02  .1180E+03 -.1792E+02 -.2865E+04 -.4938E+03
LLoads  115  .3814E+03 -.1335E+01 -.1153E+03 -.1792E+02 -.1218E+04 -.8177E+02
                          ***BEAM  NO.    8***
GLoads  134 -.1698E+02 -.1037E+01  .5749E+01 -.6790E+03  .8045E+03 -.6395E-13
```



```
============== I M A G E S  3 D ==============
= Copyright (c) 1984   Celestial Software Inc. =
===============================================

SOLVE BEAM LOADS/STRESSES    Version 2.0  07/01/90

L

Load Case  4:UBC SEISMIC LOAD - SN & EW DIR.

GLoads Node      Fx          Fy          Fz          Mx          My          Mz
LLoads Node    Axial       Y-Shear     Z-Shear     Torsion   Y-Bending   Z-Bending
Stress Node    Axial       Y-Shear     Z-Shear     Torsion   Y-Bending   Z-Bending
Stress Node  Maximum     Minimum   Cmb. Shear
------ ---- ---------   ---------   ---------   ---------   ---------   ---------
GLoads   99  .2460E+02  .2136E+02 -.1337E+02  .6790E+03 -.9957E+03 -.2239E+03
LLoads  134 -.1698E+02  .1037E+01 -.5749E+01 -.6790E+03 -.8045E+03  .6395E-13
LLoads   99  .2460E+02 -.2136E+02  .1337E+02  .6790E+03  .9957E+03  .2239E+03
                          ***BEAM  NO.    9***
GLoads  135  .4738E+02  .3137E+01 -.8164E+01 -.6247E+03 -.5132E+03  .3116E+01
GLoads  114 -.3976E+02  .1718E+02  .5444E+00  .6247E+03  .4261E+03  .1373E+03
LLoads  135 -.4738E+02 -.3137E+01  .8164E+01  .6247E+03  .5132E+03  .3116E+01
LLoads  114  .3976E+02 -.1718E+02  .5444E+00 -.6247E+03 -.4261E+03  .1373E+03
                          ***BEAM  NO.   10***
GLoads  122  .8408E+01  .1993E+03 -.9500E+01  .7406E+03 -.4999E+03 -.8074E+02
GLoads  124 -.2592E-01 -.1770E+03  .1118E+01 -.8574E+03  .4999E+03 -.1202E+02
LLoads  122  .1993E+03  .8408E+01  .9500E+01 -.4999E+03  .7406E+03  .8074E+02
LLoads  124 -.1770E+03 -.2592E-01 -.1118E+01  .4999E+03 -.8574E+03  .1202E+02
                          ***BEAM  NO.   11***
GLoads  124  .3071E+01  .1024E+03 -.7181E+01  .2001E+04 -.4182E+03  .1202E+02
GLoads  126  .5311E+01 -.8003E+02 -.1201E+01 -.2067E+04  .4182E+03  .1262E+02
LLoads  124  .1024E+03  .3071E+01  .7181E+01 -.4182E+03  .2001E+04 -.1202E+02
LLoads  126 -.8003E+02  .5311E+01  .1201E+01  .4182E+03 -.2067E+04 -.1262E+02
                          ***BEAM  NO.   12***
GLoads  126  .4501E+01  .5337E+02 -.5178E+01  .2541E+04 -.2506E+03 -.1262E+02
GLoads  128  .3881E+01 -.3102E+02 -.3204E+01 -.2563E+04  .2506E+03  .5805E+01
LLoads  126  .5337E+02  .4501E+01  .5178E+01 -.2506E+03  .2541E+04  .1262E+02
LLoads  128 -.3102E+02  .3881E+01  .3204E+01  .2506E+03 -.2563E+04 -.5805E+01
                          ***BEAM  NO.   13***
GLoads  128  .3531E+01  .2523E+02 -.1902E+01  .2343E+04 -.1339E+03 -.5805E+01
GLoads  130  .4851E+01 -.2878E+01 -.6480E+01 -.2293E+04  .1339E+03  .2033E+02
LLoads  128  .2523E+02  .3531E+01  .1902E+01 -.1339E+03  .2343E+04  .5805E+01
LLoads  130 -.2878E+01  .4851E+01  .6480E+01  .1339E+03 -.2293E+04 -.2033E+02
                          ***BEAM  NO.   14***
GLoads  130  .5978E+01  .1459E+02 -.3025E+01  .1274E+04 -.1363E+02 -.2033E+02
GLoads  132  .4499E+01  .1335E+02 -.7452E+01 -.1213E+04  .1363E+02  .3908E-13
LLoads  130  .1459E+02  .5978E+01  .3025E+01 -.1363E+02  .1274E+04  .2033E+02
LLoads  132  .1335E+02  .4499E+01  .7452E+01  .1363E+02 -.1213E+04 -.3908E-13
                          ***TRUSS NO.   15***
GLoads  132  .0000E+00  .8031E+01  .0000E+00  .0000E+00  .0000E+00  .0000E+00
GLoads  134  .0000E+00 -.8031E+01  .0000E+00  .0000E+00  .0000E+00  .0000E+00
LLoads  132  .8031E+01  .0000E+00  .0000E+00  .0000E+00  .0000E+00  .0000E+00
LLoads  134 -.8031E+01  .0000E+00  .0000E+00  .0000E+00  .0000E+00  .0000E+00
                          ***BEAM  NO.   16***
GLoads  123  .5691E+01  .2674E+02 -.8575E+01  .8680E+03 -.3891E+03 -.4667E+02
```

KAISER ENGINEERS HANFORD S/N:801854 02/22/95
PAGE 133 Run ID=MN61973 08:50:53

========== I M A G E S 3 D ==========
= Copyright (c) 1984 Celestial Software Inc. =
==========

SOLVE BEAM LOADS/STRESSES Version 2.0 07/01/90

L

Load Case 4:UBC SEISMIC LOAD - SN & EW DIR.

GLoads Node LLoads Node Stress Node Stress Node	Fx Axial Axial Maximum	Fy Y-Shear Y-Shear Minimum	Fz Z-Shear Z-Shear Cmb. Shear	Mx Torsion Torsion	My Y-Bending Y-Bending	Mz Z-Bending Z-Bending
GLoads 125	.2690E+01	-.4393E+01	.1928E+00	-.9644E+03	.3891E+03	.1366E+02
LLoads 123	.2674E+02	-.5691E+01	-.8575E+01	-.3891E+03	-.8680E+03	-.4667E+02
LLoads 125	-.4393E+01	-.2690E+01	.1928E+00	.3891E+03	.9644E+03	.1366E+02
			BEAM NO. 17			
GLoads 2	.7186E+01	.1500E+03	-.6175E+01	.6870E+03	-.6584E+03	-.6534E+02
GLoads 19	.1195E+01	-.1277E+03	-.2207E+01	-.7307E+03	.6584E+03	-.5583E+00
LLoads 2	.1500E+03	.7186E+01	.6175E+01	-.6584E+03	.6870E+03	.6534E+02
LLoads 19	-.1277E+03	.1195E+01	.2207E+01	.6584E+03	-.7307E+03	.5583E+00
			BEAM NO. 18			
GLoads 19	.3757E+01	.1348E+03	-.5316E+01	.1781E+04	-.5100E+03	.5583E+00
GLoads 35	.4624E+01	-.1124E+03	-.3066E+01	-.1806E+04	.5100E+03	.8980E+01
LLoads 19	.1348E+03	.3757E+01	.5316E+01	-.5100E+03	.1781E+04	-.5583E+00
LLoads 35	-.1124E+03	.4624E+01	.3066E+01	.5100E+03	-.1806E+04	-.8980E+01
			BEAM NO. 19			
GLoads 35	.4247E+01	.9385E+02	-.3793E+01	.2166E+04	-.2497E+03	-.8980E+01
GLoads 51	.4135E+01	-.7150E+02	-.4589E+01	-.2157E+04	.2497E+03	.7752E+01
LLoads 35	.9385E+02	.4247E+01	.3793E+01	-.2497E+03	.2166E+04	.8980E+01
LLoads 51	-.7150E+02	.4135E+01	.4589E+01	.2497E+03	-.2157E+04	-.7752E+01
			BEAM NO. 20			
GLoads 51	.4049E+01	.6111E+02	-.4262E+01	.2040E+04	.1027E+03	-.7752E+01
GLoads 67	.4332E+01	-.3876E+02	-.4120E+01	-.2042E+04	-.1027E+03	.1086E+02
LLoads 51	.6111E+02	.4049E+01	.4262E+01	.1027E+03	.2040E+04	.7752E+01
LLoads 67	-.3876E+02	.4332E+01	.4120E+01	-.1027E+03	-.2042E+04	-.1086E+02
			BEAM NO. 21			
GLoads 67	.4149E+01	.3266E+02	-.3059E+01	.1024E+04	.3675E+03	-.1086E+02
GLoads 83	.6328E+01	-.4722E+01	-.7418E+01	-.9637E+03	-.3675E+03	.4083E+02
LLoads 67	.3266E+02	.4149E+01	.3059E+01	.3675E+03	.1024E+04	.1086E+02
LLoads 83	-.4722E+01	.6328E+01	.7418E+01	-.3675E+03	-.9637E+03	-.4083E+02
			BEAM NO. 22			
GLoads 83	.1688E+02	-.8917E+01	.6310E+01	-.9962E+03	.5170E+03	-.4083E+02
GLoads 99	-.1059E+02	.2568E+02	-.1260E+02	.1152E+04	-.5170E+03	-.1858E+03
LLoads 83	-.8917E+01	.1688E+02	-.6310E+01	.5170E+03	-.9962E+03	.4083E+02
LLoads 99	.2568E+02	-.1059E+02	.1260E+02	-.5170E+03	.1152E+04	.1858E+03
			BEAM NO. 23			
GLoads 5	.2295E+01	.2102E+03	-.4295E+01	-.7925E+02	-.1673E+04	-.2324E+02
GLoads 22	.6086E+01	-.1878E+03	-.4087E+01	.7696E+02	.1673E+04	.6494E+02
LLoads 5	.2102E+03	.2295E+01	.4295E+01	-.1673E+04	.7925E+02	-.2324E+02
LLoads 22	-.1878E+03	-.6086E+01	-.4087E+01	.1673E+04	-.7696E+02	.6494E+02
			BEAM NO. 24			
GLoads 22	.2856E+01	.1532E+03	-.1236E+01	.8357E+02	-.1080E+04	.2983E+02

KAISER ENGINEERS HANFORD S/N:801854 02/22/95
PAGE 134 Run ID=MN61973 08:50:53

========== I M A G E S 3 D ==========
= Copyright (c) 1984 Celestial Software Inc. =
==========

SOLVE BEAM LOADS/STRESSES Version 2.0 07/01/90

L

Load Case 4:UBC SEISMIC LOAD - SN & EW DIR.

GLoads Node LLoads Node Stress Node Stress Node	Fx Axial Axial Maximum	Fy Y-Shear Y-Shear Minimum	Fz Z-Shear Z-Shear Cmb. Shear	Mx Torsion Torsion	My Y-Bending Y-Bending	Mz Z-Bending Z-Bending
GLoads 38	.5526E+01	-.1309E+03	-.7146E+01	-.1855E+02	.1080E+04	-.4576E+00
LLoads 22	.1532E+03	-.2856E+01	-.1236E+01	-.1080E+04	-.8357E+02	.2983E+02
LLoads 38	-.1309E+03	-.5526E+01	-.7146E+01	.1080E+04	.1855E+02	-.4576E+00
			BEAM NO. 25			
GLoads 38	.3229E+01	.1275E+03	-.3992E+01	-.5644E+02	-.3381E+03	-.2424E+02
GLoads 54	.5152E+01	-.1051E+03	-.4390E+01	.6082E+02	.3381E+03	.4539E+02
LLoads 38	.1275E+03	-.3229E+01	.3992E+01	-.3381E+03	.5644E+02	-.2424E+02
LLoads 54	-.1051E+03	-.5152E+01	-.4390E+01	.3381E+03	-.6082E+02	.4539E+02
			BEAM NO. 26			
GLoads 54	.6018E+01	.9966E+02	-.5935E+01	.3204E+02	.5767E+03	.1637E+02
GLoads 70	.2364E+01	-.7731E+02	-.2446E+01	-.7042E+02	-.5767E+03	-.5656E+02
LLoads 54	.9966E+02	-.6018E+01	-.5935E+01	.5767E+03	-.3204E+02	.1637E+02
LLoads 70	-.7731E+02	-.2364E+01	-.2446E+01	-.5767E+03	.7042E+02	-.5656E+02
			BEAM NO. 27			
GLoads 70	.5042E+01	.5653E+02	-.5315E+01	-.8189E+02	.1371E+04	-.5833E+02
GLoads 86	.5436E+01	-.2859E+02	-.5162E+01	.7978E+02	-.1371E+04	.6375E+02
LLoads 70	.5653E+02	-.5042E+01	-.5315E+01	.1371E+04	.8189E+02	-.5833E+02
LLoads 86	-.2859E+02	-.5436E+01	-.5162E+01	-.1371E+04	-.7978E+02	.6375E+02
			BEAM NO. 28			
GLoads 86	.1875E+02	.1178E+02	-.2212E+02	.7583E+02	.4647E+03	-.5086E+01
GLoads 102	-.1246E+02	.4981E+01	.1584E+02	-.3890E+03	-.4647E+03	-.2524E+03
LLoads 86	.1178E+02	-.1875E+02	-.2212E+02	.4647E+03	-.7583E+02	-.5086E+01
LLoads 102	.4981E+01	.1246E+02	.1584E+02	-.4647E+03	.3890E+03	-.2524E+03
			BEAM NO. 29			
GLoads 11	.1300E+02	.1849E+03	-.5748E+01	-.8742E+02	.3956E+04	-.2906E+03
GLoads 28	.5055E-01	-.1501E+03	-.7303E+01	.1045E+03	-.3956E+04	.1481E+03
LLoads 11	.1849E+03	-.5748E+01	.1300E+02	.3956E+04	-.2906E+03	-.8742E+02
LLoads 28	-.1501E+03	-.7303E+01	.5055E-01	-.3956E+04	.1481E+03	.1045E+03
			BEAM NO. 30			
GLoads 28	-.1097E+01	.1490E+03	-.3286E+01	.5503E+02	.2744E+04	.1939E+03
GLoads 44	.1415E+02	-.1142E+03	-.9765E+01	.1624E+02	-.2744E+04	-.2622E+02
LLoads 28	.1490E+03	-.3286E+01	-.1097E+01	.2744E+04	.1939E+03	.5503E+02
LLoads 44	-.1142E+03	-.9765E+01	.1415E+02	-.2744E+04	-.2622E+02	.1624E+02
			BEAM NO. 31			
GLoads 44	.6958E+01	.1322E+03	-.6126E+01	-.3628E+02	.1088E+04	-.1908E+02
GLoads 60	.6093E+01	-.9743E+02	-.6925E+01	.4507E+02	-.1088E+04	.9553E+01
LLoads 44	.1322E+03	-.6126E+01	.6958E+01	.1088E+04	-.1908E+02	-.3628E+02
LLoads 60	-.9743E+02	-.6925E+01	.6093E+01	-.1088E+04	.9553E+01	.4507E+02
			BEAM NO. 32			
GLoads 60	.5730E+01	.1099E+03	-.7673E+01	.1755E+01	-.6849E+03	-.7172E+01

LCL4PRINT

KAISER ENGINEERS HANFORD S/N:801854 02/22/95
PAGE 135 Run ID=MN61973 08:50:53

```
============== I M A G E S  3 D ==============
= Copyright (c) 1984   Celestial Software Inc. =
===============================================

SOLVE BEAM LOADS/STRESSES    Version 2.0  07/01/90

L

Load Case  4:UBC SEISMIC LOAD - SN & EW DIR.

GLoads Node     Fx          Fy          Fz          Mx          My          Mz
LLoads Node   Axial     Y-Shear     Z-Shear     Torsion   Y-Bending   Z-Bending
Stress Node   Axial     Y-Shear     Z-Shear     Torsion   Y-Bending   Z-Bending
Stress Node  Maximum     Minimum   Cmb. Shear
------ ---- ---------- ---------- ---------- ---------- ---------- ----------
GLoads   76  .7321E+01 -.7509E+02 -.5378E+01 -.2700E+02  .6849E+03  .2468E+02
LLoads   60  .1099E+03 -.7673E+01  .5730E+01 -.6849E+03 -.7172E+01  .1755E+01
LLoads   76 -.7509E+02 -.5378E+01  .7321E+01  .6849E+03  .2468E+02 -.2700E+02
                          ***BEAM  NO.   33***
GLoads   76  .1189E+02  .6924E+02 -.8527E+01 -.6246E+02 -.2153E+04 -.3939E+02
GLoads   92  .4424E+01 -.2574E+02 -.7787E+01  .5227E+02  .2153E+04 -.6326E+02
LLoads   76  .6924E+02 -.8527E+01  .1189E+02 -.2153E+04 -.3939E+02 -.6246E+02
LLoads   92 -.2574E+02 -.7787E+01  .4424E+01  .2153E+04 -.6326E+02  .5227E+02
                          ***BEAM  NO.   34***
GLoads   92  .4534E+01  .1849E+02  .8182E+01 -.8777E+02 -.9863E+03 -.2028E+03
GLoads  108  .5255E+01  .7615E+01 -.1797E+02  .3035E+03  .9863E+03  .2088E+03
LLoads   92  .1849E+02  .8182E+01  .4534E+01 -.9863E+03 -.2028E+03 -.8777E+02
LLoads  108  .7615E+01 -.1797E+02  .5255E+01  .9863E+03  .2088E+03  .3035E+03
                          ***BEAM  NO.   35***
GLoads   17  .5983E+01  .8572E+02 -.7754E+01  .1039E+04 -.6739E+03 -.5152E+02
GLoads   34  .2399E+01 -.6337E+02 -.6277E+00 -.1117E+04  .6739E+03  .1211E+02
LLoads   17  .8572E+02 -.5983E+01 -.7754E+01 -.6739E+03 -.1039E+04 -.5152E+02
LLoads   34 -.6337E+02 -.2399E+01 -.6277E+00  .6739E+03  .1117E+04  .1211E+02
                          ***BEAM  NO.   36***
GLoads   34  .4365E+01  .7571E+02 -.5605E+01  .2598E+04 -.4558E+03 -.1211E+02
GLoads   50  .4017E+01 -.5336E+02 -.2776E+01 -.2629E+04  .4558E+03  .8284E+01
LLoads   34  .7571E+02 -.4365E+01 -.5605E+01 -.4558E+03 -.2598E+04 -.1211E+02
LLoads   50 -.5336E+02 -.4017E+01 -.2776E+01  .4558E+03  .2629E+04  .8284E+01
                          ***BEAM  NO.   37***
GLoads   50  .2867E+01  .6639E+02 -.3940E+01  .2940E+04 -.1636E+03 -.8284E+01
GLoads   66  .5515E+01 -.4404E+02 -.4442E+01 -.2935E+04  .1636E+03  .3742E+02
LLoads   50  .6639E+02 -.2867E+01 -.3940E+01 -.1636E+03 -.2940E+04 -.8284E+01
LLoads   66 -.4404E+02 -.5515E+01 -.4442E+01  .1636E+03  .2935E+04  .3742E+02
                          ***BEAM  NO.   38***
GLoads   66  .1105E+02  .5842E+02 -.3002E+01  .2254E+04  .3072E+03 -.3742E+02
GLoads   82 -.2664E+01 -.3607E+02 -.5380E+01 -.2228E+04 -.3072E+03 -.1134E+03
LLoads   66  .5842E+02 -.1105E+02 -.3002E+01  .3072E+03 -.2254E+04 -.3742E+02
LLoads   82 -.3607E+02  .2664E+01 -.5380E+01 -.3072E+03  .2228E+04 -.1134E+03
                          ***BEAM  NO.   39***
GLoads   82 -.1782E+02  .5618E+02  .3876E+01 -.1578E+04  .3362E+03  .1134E+03
GLoads   98  .2829E+02 -.2824E+02 -.1435E+02  .1829E+04 -.3362E+03  .5206E+03
LLoads   82  .5618E+02  .1782E+02  .3876E+01  .3362E+03  .1578E+04  .1134E+03
LLoads   98 -.2824E+02 -.2829E+02 -.1435E+02 -.3362E+03 -.1829E+04  .5206E+03
                          ***BEAM  NO.   40***
GLoads   98 -.5415E+02  .2185E+02 -.2581E+02 -.1583E+04 -.2961E+03  .6598E+03
```

KAISER ENGINEERS HANFORD S/N:801854 02/22/95
PAGE 136 Run ID=MN61973 08:50:54

```
============== I M A G E S  3 D ==============
= Copyright (c) 1984   Celestial Software Inc. =
===============================================

SOLVE BEAM LOADS/STRESSES    Version 2.0  07/01/90

L

Load Case  4:UBC SEISMIC LOAD - SN & EW DIR.

GLoads Node     Fx          Fy          Fz          Mx          My          Mz
LLoads Node   Axial     Y-Shear     Z-Shear     Torsion   Y-Bending   Z-Bending
Stress Node   Axial     Y-Shear     Z-Shear     Torsion   Y-Bending   Z-Bending
Stress Node  Maximum     Minimum   Cmb. Shear
------ ---- ---------- ---------- ---------- ---------- ---------- ----------
GLoads  114  .6044E+02 -.5089E+01  .1953E+02  .1209E+04  .2961E+03  .2856E+03
LLoads   98  .2185E+02  .5415E+02 -.2581E+02 -.2961E+03  .1583E+04  .6598E+03
LLoads  114 -.5089E+01 -.6044E+02  .1953E+02  .2961E+03 -.1209E+04  .2856E+03
                          ***BEAM  NO.   41***
GLoads   99  .3784E+00 -.9884E+01 -.2831E+02 -.6894E+03  .1591E+04 -.1952E+03
GLoads  100  .4828E+01  .2377E+02  .2310E+02  .6894E+03 -.1239E+04 -.3481E+02
LLoads   99  .3784E+00  .9884E+01  .2831E+02 -.6894E+03 -.1591E+04  .1952E+03
LLoads  100  .4828E+01 -.2377E+02 -.2310E+02  .6894E+03  .1239E+04  .3481E+02
                          ***BEAM  NO.   42***
GLoads  100 -.1853E+02  .1135E+02 -.1797E+02 -.1105E+04  .6956E+02  .3481E+02
GLoads  101  .2374E+02  .2536E+01  .1277E+02  .1105E+04  .1405E+03  .2542E+02
LLoads  100 -.1853E+02 -.1135E+02  .1797E+02  .1105E+04 -.6956E+02 -.3481E+02
LLoads  101  .2374E+02 -.2536E+01 -.1277E+02  .1105E+04 -.1405E+03 -.2542E+02
                          ***BEAM  NO.   43***
GLoads  101 -.3608E+02 -.1980E+02 -.2497E+02 -.8361E+03 -.1164E+04 -.2542E+02
GLoads  102  .4129E+02  .3368E+02  .1976E+02  .8361E+03  .1470E+04 -.3401E+03
LLoads  101 -.3608E+02  .1980E+02  .2497E+02 -.8361E+03  .1164E+04  .2542E+02
LLoads  102  .4129E+02 -.3368E+02 -.1976E+02  .8361E+03 -.1470E+04  .3401E+03
                          ***BEAM  NO.   44***
GLoads  102  .1658E+02 -.3001E+02 -.1246E+03 -.5020E+03 -.1517E+04  .5100E+03
GLoads  103 -.1067E+02  .4576E+02  .1187E+03 -.8518E+02  .1306E+04 -.5100E+03
LLoads  102  .1246E+03  .3001E+02 -.1658E+02 -.5100E+03  .1517E+04  .5020E+03
LLoads  103 -.1187E+03 -.4576E+02  .1067E+02  .5100E+03 -.1306E+04  .8518E+02
                          ***BEAM  NO.   45***
GLoads  103  .1963E+02  .1250E+02 -.6495E+02  .8518E+02  .1772E+03  .5614E+03
GLoads  104 -.1373E+02  .3252E+01  .5905E+02 -.1355E+02 -.4358E+03 -.5614E+03
LLoads  103  .6495E+02 -.1250E+02 -.1963E+02 -.5614E+03 -.1772E+03 -.8518E+02
LLoads  104 -.5905E+02 -.3252E+01  .1373E+02  .5614E+03  .4358E+03  .1355E+02
                          ***BEAM  NO.   46***
GLoads  104  .9112E+01  .7282E+01 -.4481E+02  .1355E+02  .1516E+04  .9698E+02
GLoads  105 -.3206E+01  .8465E+01  .3891E+02 -.2272E+02 -.1611E+04 -.9698E+02
LLoads  104  .4481E+02 -.7282E+01 -.9112E+01 -.9698E+02 -.1516E+04 -.1355E+02
LLoads  105 -.3891E+02 -.8465E+01  .3206E+01  .9698E+02  .1611E+04  .2272E+02
                          ***BEAM  NO.   47***
GLoads  105  .3258E+01  .8244E+01 -.5128E+02  .2272E+02  .1878E+04 -.1949E+03
GLoads  106  .2647E+01  .7503E+01  .4538E+02 -.1698E+02 -.1883E+04  .1949E+03
LLoads  105  .5128E+02 -.8244E+01 -.3258E+01  .1949E+03 -.1878E+04 -.2272E+02
LLoads  106 -.4538E+02 -.7503E+01 -.2647E+01 -.1949E+03  .1883E+04  .1698E+02
                          ***BEAM  NO.   48***
GLoads  106 -.5688E+01  .5802E+01 -.8729E+02  .1698E+02  .1417E+04 -.5504E+03
```

========== I M A G E S 3 D ==========
= Copyright (c) 1984 Celestial Software Inc. =
==========

SOLVE BEAM LOADS/STRESSES Version 2.0 07/01/90

L

Load Case 4:UBC SEISMIC LOAD - SN & EW DIR.

GLoads Node LLoads Node Stress Node Stress Node	Fx Axial Axial Maximum	Fy Y-Shear Y-Shear Minimum	Fz Z-Shear Z-Shear Cmb. Shear	Mx Torsion Torsion	My Y-Bending Y-Bending	Mz Z-Bending Z-Bending
GLoads 107	.1159E+02	.9946E+01	.8139E+02	-.4910E+02	-.1283E+04	.5504E+03
LLoads 106	.8729E+02	-.5802E+01	.5688E+01	.5504E+03	-.1417E+04	-.1698E+02
LLoads 107	-.8139E+02	-.9946E+01	-.1159E+02	-.5504E+03	.1283E+04	.4910E+02
			BEAM NO. 49			
GLoads 107	-.5290E+01	.2876E+02	-.1748E+03	.4910E+02	.4010E+03	-.5195E+03
GLoads 108	.1120E+02	-.1301E+02	.1689E+03	.2746E+03	-.2732E+03	.5195E+03
LLoads 107	.1748E+03	-.2876E+02	.5290E+01	.5195E+03	-.4010E+03	-.4910E+02
LLoads 108	-.1689E+03	.1301E+02	-.1120E+02	-.5195E+03	.2732E+03	-.2746E+03
			BEAM NO. 50			
GLoads 108	-.7109E+02	.1494E+02	-.1010E+02	.6137E+03	-.3535E+03	.1142E+03
GLoads 109	.7687E+02	.4657E+00	.4326E+01	-.6137E+03	.4629E+03	-.4377E+01
LLoads 108	-.7109E+02	-.1494E+02	.1010E+02	.6137E+03	.3535E+03	-.1142E+03
LLoads 109	.7687E+02	-.4657E+00	-.4326E+01	-.6137E+03	-.4629E+03	.4377E+01
			BEAM NO. 51			
GLoads 109	-.4310E+02	.6635E+01	-.1120E+02	.6637E+03	-.1269E+04	.4377E+01
GLoads 110	.4888E+02	.8774E+01	.5422E+01	-.6637E+03	.1395E+04	-.2060E+02
LLoads 109	-.4310E+02	-.6635E+01	.1120E+02	.6637E+03	.1269E+04	-.4377E+01
LLoads 110	.4888E+02	-.8774E+01	-.5422E+01	-.6637E+03	-.1395E+04	.2060E+02
			BEAM NO. 52			
GLoads 110	-.2936E+02	.7858E+01	-.2622E+01	.3148E+03	-.1859E+04	.2060E+02
GLoads 111	.3513E+02	.7550E+01	-.3157E+01	-.3148E+03	.1855E+04	-.1827E+02
LLoads 110	-.2936E+02	-.7858E+01	.2622E+01	.3148E+03	.1859E+04	-.2060E+02
LLoads 111	.3513E+02	-.7550E+01	.3157E+01	-.3148E+03	-.1855E+04	.1827E+02
			BEAM NO. 53			
GLoads 111	-.1917E+02	.7650E+01	.2922E+01	-.1984E+01	-.1650E+04	.1827E+02
GLoads 112	.2495E+02	.7759E+01	-.8700E+01	.1984E+01	.1562E+04	-.1910E+02
LLoads 111	-.1917E+02	-.7650E+01	-.2922E+01	-.1984E+01	.1650E+04	-.1827E+02
LLoads 112	.2495E+02	-.7759E+01	.8700E+01	.1984E+01	-.1562E+04	.1910E+02
			BEAM NO. 54			
GLoads 112	.2918E+01	.7406E+01	.1300E+02	-.5076E+03	-.5977E+03	.1910E+02
GLoads 113	.2861E+01	.8002E+01	-.1878E+02	.5076E+03	.3567E+03	-.2362E+02
LLoads 112	.2918E+01	-.7406E+01	-.1300E+02	-.5076E+03	.5977E+03	-.1910E+02
LLoads 113	.2861E+01	-.8002E+01	.1878E+02	.5076E+03	-.3567E+03	.2362E+02
			BEAM NO. 55			
GLoads 113	.6345E+02	.1655E+02	.3991E+01	-.3466E+03	.7201E+03	.2362E+02
GLoads 114	-.5767E+02	-.1143E+01	-.9769E+01	.3466E+03	-.8245E+03	.1106E+03
LLoads 113	.6345E+02	-.1655E+02	-.3991E+01	-.3466E+03	-.7201E+03	-.2362E+02
LLoads 114	-.5767E+02	.1143E+01	.9769E+01	.3466E+03	.8245E+03	-.1106E+03
			BEAM NO. 56			
GLoads 115	.6423E+04	.1601E+05	-.6422E+04	.1367E+06	-.7745E+01	.1368E+06

========== I M A G E S 3 D ==========
= Copyright (c) 1984 Celestial Software Inc. =
==========

SOLVE BEAM LOADS/STRESSES Version 2.0 07/01/90

L

Load Case 4:UBC SEISMIC LOAD - SN & EW DIR.

GLoads Node LLoads Node Stress Node Stress Node	Fx Axial Axial Maximum	Fy Y-Shear Y-Shear Minimum	Fz Z-Shear Z-Shear Cmb. Shear	Mx Torsion Torsion	My Y-Bending Y-Bending	Mz Z-Bending Z-Bending
GLoads 120	-.6225E+04	-.1548E+05	.6224E+04	.1985E+06	.7745E+01	.1984E+06
LLoads 115	-.1601E+05	.3657E+04	.8314E+04	.7745E+01	-.1770E+06	.7779E+05
LLoads 120	.1548E+05	-.3544E+04	-.8058E+04	-.7745E+01	-.2568E+06	.1131E+06
			BEAM NO. 57			
GLoads 120	-.5025E+04	-.1452E+05	.5026E+04	-.1985E+06	-.7745E+01	-.1984E+06
GLoads 121	.5258E+04	.1514E+05	-.5260E+04	-.1230E+06	.7745E+01	-.1230E+06
LLoads 120	.1452E+05	-.2863E+04	-.6505E+04	.7745E+01	.2568E+06	-.1131E+06
LLoads 121	-.1514E+05	.2996E+04	.6807E+04	-.7745E+01	.1592E+06	-.7004E+05
			BEAM NO. 58			
GLoads 116	.2350E+04	.5248E+04	-.4354E+03	-.1881E+05	-.2560E+03	-.8963E+04
GLoads 121	-.2272E+04	-.5039E+04	.3569E+03	.1881E+05	.8575E+04	.1170E+06
LLoads 116	.2350E+04	.5248E+04	-.4354E+03	-.1881E+05	-.2560E+03	-.8963E+04
LLoads 121	-.2272E+04	-.5039E+04	.3569E+03	.1881E+05	.8575E+04	.1170E+06
			BEAM NO. 59			
GLoads 117	.4353E+03	.2742E+04	-.2351E+04	-.2377E+05	-.2474E+03	-.1881E+05
GLoads 121	-.3569E+03	-.2533E+04	.2272E+04	-.3162E+05	.8566E+04	.1881E+05
LLoads 117	-.2351E+04	.2742E+04	-.4353E+03	-.1881E+05	-.2474E+03	.2377E+05
LLoads 121	.2272E+04	-.2533E+04	.3569E+03	.1881E+05	.8566E+04	.3162E+05
			BEAM NO. 60			
GLoads 118	.2350E+04	.2743E+04	-.4362E+03	-.1880E+05	.2426E+03	-.2377E+05
GLoads 121	-.2272E+04	-.2534E+04	.3578E+03	.1880E+05	-.8579E+04	-.3163E+05
LLoads 118	-.2350E+04	.2743E+04	.4362E+03	.1880E+05	.2426E+03	.2377E+05
LLoads 121	.2272E+04	-.2534E+04	-.3578E+03	-.1880E+05	-.8579E+04	.3163E+05
			BEAM NO. 61			
GLoads 119	.4362E+03	.5248E+04	-.2351E+04	-.8956E+04	.2340E+03	-.1881E+05
GLoads 121	-.3577E+03	-.5039E+04	.2272E+04	.1170E+06	-.8570E+04	.1881E+05
LLoads 119	.2351E+04	.5248E+04	.4362E+03	.1881E+05	.2340E+03	-.8956E+04
LLoads 121	-.2272E+04	-.5039E+04	-.3577E+03	-.1881E+05	-.8570E+04	.1170E+06
			BEAM NO. 62			
GLoads 125	.4129E+01	.6138E+02	-.6192E+01	.2234E+04	-.2573E+03	-.1366E+02
GLoads 127	.4253E+01	-.3903E+02	-.2190E+01	-.2278E+04	.2573E+03	.1502E+02
LLoads 125	.6138E+02	-.4129E+01	-.6192E+01	-.2573E+03	-.2234E+04	-.1366E+02
LLoads 127	-.3903E+02	-.4253E+01	-.2190E+01	.2573E+03	.2278E+04	.1502E+02
			BEAM NO. 63			
GLoads 127	.4604E+01	.7744E+02	-.2755E+01	.2489E+04	.6745E+01	-.1502E+02
GLoads 129	.3778E+01	-.5509E+02	-.5627E+01	-.2457E+04	-.6745E+01	.5932E+01
LLoads 127	.7744E+02	-.4604E+01	-.2755E+01	.6745E+01	-.2489E+04	-.1502E+02
LLoads 129	-.5509E+02	-.3778E+01	-.5627E+01	-.6745E+01	.2457E+04	.5932E+01
			BEAM NO. 64			
GLoads 129	.3560E+01	.7547E+02	.2060E+01	.1324E+04	.4946E+03	-.5932E+01

```
              ============== I M A G E S  3 D ==============
              = Copyright (c) 1984   Celestial Software Inc. =
              ================================================

           SOLVE BEAM LOADS/STRESSES    Version 2.0  07/01/90

       L

Load Case  4:UBC SEISMIC LOAD - SN & EW DIR.

GLoads Node     Fx          Fy          Fz          Mx          My          Mz
LLoads Node    Axial       Y-Shear     Z-Shear     Torsion     Y-Bending   Z-Bending
Stress Node    Axial       Y-Shear     Z-Shear     Torsion     Y-Bending   Z-Bending
Stress Node   Maximum     Minimum    Cmb. Shear
------ ----  ----------  ----------  ----------  ----------  ----------  ----------
GLoads  131   .4822E+01  -.5312E+02  -.1044E+02  -.1186E+04  -.4946E+03   .1981E+02
LLoads  129   .7547E+02  -.3560E+01   .2060E+01   .4946E+03  -.1324E+04  -.5932E+01
LLoads  131  -.5312E+02  -.4822E+01  -.1044E+02  -.4946E+03   .1186E+04   .1981E+02
                          ***BEAM  NO.   65***
GLoads  131   .4804E+01   .1634E+02  -.6791E+01  -.4379E+03   .1115E+03  -.1981E+02
GLoads  135   .5674E+01   .1160E+02  -.3686E+01   .3952E+03  -.1115E+03   .3177E+02
LLoads  131   .1634E+02  -.4804E+01  -.6791E+01   .1115E+03   .4379E+03  -.1981E+02
LLoads  133   .1160E+02  -.5674E+01  -.3686E+01  -.1115E+03  -.3952E+03   .3177E+02
                          ***BEAM  NO.   66***
GLoads  133   .5257E+01  -.9183E+01   .3265E+01  -.7896E+03   .7013E+03  -.3177E+02
GLoads  135   .1029E+01   .2595E+02  -.9551E+01   .8953E+03   .7013E+03  -.3116E+01
LLoads  133  -.9183E+01  -.5257E+01   .3265E+01  -.7013E+03   .7896E+03  -.3177E+02
LLoads  135   .2595E+02  -.1029E+01  -.9551E+01   .7013E+03  -.8953E+03  -.3116E+01
                          ***BEAM  NO.   67***
GLoads  115  -.8298E+03  -.3990E+04  -.8968E+02  -.3378E+05   .2465E+04  -.3406E+05
GLoads  116   .1268E+04   .5159E+04  -.3489E+03   .1881E+05   .2560E+03   .8963E+04
LLoads  115   .4074E+04  -.1027E+03  -.8968E+02   .3617E+04  -.3367E+05  -.3406E+05
LLoads  116  -.5303E+04   .3250E+03  -.3489E+03  -.3617E+04   .1846E+05   .8963E+04
                          ***BEAM  NO.   68***
GLoads  115   .9088E+02  -.4046E+04  -.9605E+03  -.3540E+05   .2449E+04  -.3364E+05
GLoads  117   .3477E+03   .5215E+04   .5220E+03   .2377E+05   .2474E+03   .1881E+05
LLoads  115   .4152E+04  -.2212E+03  -.9088E+02   .3609E+04  -.3354E+05   .3540E+05
LLoads  117  -.5225E+04  -.4194E+03  -.3477E+03  -.3609E+04   .1847E+05  -.2377E+05
                          ***BEAM  NO.   69***
GLoads  115   .9617E+03  -.4046E+04  -.8955E+02  -.3379E+05  -.2482E+04  -.3526E+05
GLoads  118  -.5232E+03   .5215E+04  -.3490E+03   .1880E+05  -.2426E+03   .2377E+05
LLoads  115   .4152E+04  -.2225E+03   .8955E+02  -.3603E+04   .3369E+05   .3526E+05
LLoads  118  -.5225E+04  -.4182E+03   .3490E+03   .3603E+04  -.1846E+05  -.2377E+05
                          ***BEAM  NO.   70***
GLoads  115   .9075E+02  -.3990E+04   .8310E+03  -.3420E+05  -.2465E+04  -.3365E+05
GLoads  119   .3478E+03   .5159E+04  -.1270E+04   .8956E+04  -.2340E+03   .1881E+05
LLoads  115   .4074E+04  -.1039E+03   .9075E+02  -.3595E+04   .3355E+05  -.3420E+05
LLoads  119  -.5303E+04   .3262E+03   .3478E+03   .3595E+04  -.1846E+05   .8956E+04
```



```
              ============== I M A G E S  3 D ==============
              = Copyright (c) 1984   Celestial Software Inc. =
              ================================================

           SOLVE BEAM LOADS/STRESSES    Version 2.0  07/01/90

       L

Load Case  4:UBC SEISMIC LOAD - SN & EW DIR.

                 MAXIMUM STRESS SUMMARY FOR BEAMS/TRUSSES
                    WITHIN SPECIFIED RANGE    1-   70

            Maximum (absolute) Stress =  .1381E+04 at BEAM    56

  Beam     Axial       Y-Shear     Z-Shear     Torsion     Y-Bending   Z-Bending
  ----  ----------  ----------  ----------  ----------  ----------  ----------
    56   .4397E+03   .2014E+03   .4578E+03  -.4402E-03  -.6539E+03   .2878E+03
         Maximum     Minimum    Cmb. Shear
         ----------  ----------  ----------  ----------
         .1381E+04  -.5020E+03   .6907E+03
```

========== I M A G E S 3 D ==========
= Copyright (c) 1984 Celestial Software Inc. =
==========

SOLVE PLATE LOADS/STRESSES Version 2.0 07/01/90

L

Load Case 4:UBC SEISMIC LOAD - SN & EW DIR.

PLATE LOADS AND/OR STRESSES

GLoads	Node	Fx	Fy	Fz	Mx	My	Mz
				PLATE 1			
GLoads	2	.2290E+03	.4661E+03	-.1931E+02	-.2234E+02	-.1666E+03	.0000E+00
GLoads	3	-.9616E+01	.1179E+03	-.1458E+02	-.2017E+03	-.5040E+01	.0000E+00
GLoads	20	-.2073E+03	-.4710E+03	.1182E+02	-.3549E+03	.2116E+03	.0000E+00
GLoads	19	-.1209E+02	-.1129E+03	.2207E+02	-.1666E+03	-.7765E+02	.0000E+00
				PLATE 2			
GLoads	3	.2275E+03	.4741E+03	-.4334E+01	.2017E+03	-.2041E+03	.0000E+00
GLoads	4	-.2227E+02	.1526E+03	-.6742E+01	-.2131E+03	-.6695E+02	.0000E+00
GLoads	21	-.2011E+03	-.4830E+03	.1584E+01	-.2959E+03	.2285E+03	.0000E+00
GLoads	20	-.4149E+01	-.1437E+03	.9492E+01	.6369E+02	-.2797E+02	.0000E+00
				PLATE 3			
GLoads	4	.2338E+03	.5142E+03	.6601E+01	.2131E+03	-.2141E+03	.0000E+00
GLoads	5	-.3085E+02	.2118E+03	-.1200E+02	-.2588E+03	-.2086E+03	.0000E+00
GLoads	22	-.1909E+03	-.5385E+03	-.1719E+02	-.2575E+03	.1388E+02	.0000E+00
GLoads	21	-.1211E+02	-.1875E+03	.2259E+02	.1845E+03	.9922E+01	.0000E+00
				PLATE 4			
GLoads	5	-.4562E+01	.7156E+03	-.3214E+03	.0000E+00	-.2465E+03	-.6575E+02
GLoads	6	-.1189E+02	.8818E+02	-.9969E+02	.0000E+00	-.2501E+03	.2720E+03
GLoads	23	-.1992E+02	-.6858E+03	.2611E+03	-.2280E+03	.5272E+01	.0000E+00
GLoads	22	.3638E+02	-.1180E+03	.1600E+03	.0000E+00	-.1745E+01	-.7218E+02
				PLATE 5			
GLoads	6	.1639E+02	.6358E+03	-.3124E+03	.0000E+00	-.6480E+02	-.2720E+03
GLoads	7	.1174E+02	.5832E+02	-.8832E+02	.0000E+00	-.2425E+03	.1217E+03
GLoads	24	-.2018E+02	-.6271E+03	.2767E+03	.6760E+02	-.8363E+02	.0000E+00
GLoads	23	-.7940E+01	-.6697E+02	.1240E+03	.4009E+03	.2600E+03	.0000E+00
				PLATE 6			
GLoads	7	.1766E+02	.5908E+03	-.2975E+03	.0000E+00	.5661E+02	-.1217E+03
GLoads	8	.1277E+02	.6036E+02	-.7155E+02	.0000E+00	-.1833E+03	.1001E+01
GLoads	25	-.1978E+02	-.5842E+03	.2719E+03	.2050E+03	-.2232E+03	.0000E+00
GLoads	24	-.1064E+02	-.6688E+02	.9718E+02	.3437E+03	.2411E+03	.0000E+00
				PLATE 7			
GLoads	8	.1362E+02	.5528E+03	-.2808E+03	.0000E+00	.1919E+03	-.1001E+01
GLoads	9	.2027E+02	.5992E+02	-.6226E+02	.0000E+00	-.4334E+02	-.1637E+03
GLoads	26	-.1235E+02	-.5468E+03	.2596E+03	.3769E+03	-.2411E+03	.0000E+00
GLoads	25	-.2154E+02	-.6597E+02	.8346E+02	.2039E+03	.2153E+03	.0000E+00
				PLATE 8			
GLoads	9	.6644E+01	.5134E+03	-.2594E+03	.0000E+00	.2443E+03	.1637E+03
GLoads	10	.5843E+01	.5590E+02	-.5776E+02	.0000E+00	.8537E+02	-.1539E+03
GLoads	27	.5712E+01	-.5060E+03	.2390E+03	.2731E+03	-.2274E+03	.0000E+00
GLoads	26	-.1820E+02	-.6322E+02	.7815E+02	.1144E+02	.7680E+02	.0000E+00

========== I M A G E S 3 D ==========
= Copyright (c) 1984 Celestial Software Inc. =
==========

SOLVE PLATE LOADS/STRESSES Version 2.0 07/01/90

L

Load Case 4:UBC SEISMIC LOAD - SN & EW DIR.

GLoads	Node	Fx	Fy	Fz	Mx	My	Mz
				PLATE 9			
GLoads	10	-.4248E+01	.4696E+03	-.2320E+03	.0000E+00	.2223E+03	.1539E+03
GLoads	11	.3199E+02	.4846E+02	-.5951E+02	.0000E+00	.2606E+03	-.4501E+03
GLoads	28	.1983E+01	-.4622E+03	.2079E+03	.0000E+00	.7285E+02	-.4407E+03
GLoads	27	-.2973E+02	-.5589E+02	.8357E+02	-.1265E+03	-.2904E+02	.0000E+00
				PLATE 10			
GLoads	11	.2297E+03	.4712E+03	-.8093E+01	-.2012E+03	.3028E+03	.0000E+00
GLoads	12	.1018E+03	-.1572E+02	.1398E+02	.2594E+03	.2145E+03	.0000E+00
GLoads	29	-.1945E+03	-.4651E+03	.2367E+02	.2463E+03	-.8106E+02	.0000E+00
GLoads	28	-.1370E+03	.9661E+01	-.2956E+02	-.1750E+03	.1348E+03	.0000E+00
				PLATE 11			
GLoads	12	.2207E+03	.4419E+03	-.1096E+02	-.2594E+03	.1415E+03	.0000E+00
GLoads	13	.8565E+02	-.2803E+01	-.6222E+01	.2169E+03	.2699E+03	.0000E+00
GLoads	30	-.1927E+03	-.4416E+03	.2033E+02	.3599E+02	.1373E+02	.0000E+00
GLoads	29	-.1137E+03	.2432E+01	-.3142E+01	-.3716E+03	-.2111E+03	.0000E+00
				PLATE 12			
GLoads	13	.2093E+03	.4190E+03	-.1895E+02	-.2169E+03	.3056E+02	.0000E+00
GLoads	14	.6683E+02	.1697E+02	-.1149E+02	.1152E+03	.2486E+03	.0000E+00
GLoads	31	-.1857E+03	-.4175E+03	.2231E+02	-.1216E+03	.1385E+03	.0000E+00
GLoads	30	-.9044E+02	-.1846E+02	.8130E+01	-.4462E+03	-.2536E+03	.0000E+00
				PLATE 13			
GLoads	14	.1954E+03	.3941E+03	-.1637E+02	-.1152E+03	-.9153E+02	.0000E+00
GLoads	15	.5402E+02	.2960E+02	-.2067E+02	-.2284E+02	.1488E+03	.0000E+00
GLoads	32	-.1739E+03	-.3914E+03	.1788E+02	-.3080E+03	.1622E+03	.0000E+00
GLoads	31	-.7552E+02	-.3229E+02	.1915E+02	-.3687E+03	-.2617E+03	.0000E+00
				PLATE 14			
GLoads	15	.1776E+03	.3640E+03	-.1313E+02	.2284E+02	-.1461E+03	.0000E+00
GLoads	16	.4533E+02	.3599E+02	-.8673E+01	-.3111E+00	.5837E+02	.0000E+00
GLoads	33	-.1567E+03	-.3593E+03	.4078E+01	-.2504E+03	.1786E+03	.0000E+00
GLoads	32	-.6623E+02	-.4062E+02	.1773E+02	-.2519E+03	-.1606E+03	.0000E+00
				PLATE 15			
GLoads	16	.1523E+03	.3231E+03	-.1098E+02	.3111E+00	-.1588E+03	.0000E+00
GLoads	17	.4125E+02	.3427E+02	-.4207E+02	-.3867E+03	-.6766E+02	.0000E+00
GLoads	34	-.1301E+03	-.3151E+03	.2234E+02	-.5779E+03	.1317E+02	.0000E+00
GLoads	33	-.6347E+02	-.4229E+02	.3071E+02	-.2027E+03	-.8593E+02	.0000E+00
				PLATE 16			
GLoads	19	.1252E+03	.3788E+03	-.8675E+01	.1806E+03	-.3177E+03	.0000E+00
GLoads	20	.4066E+02	.1152E+03	-.2531E+00	.3968E+02	.2065E+03	.0000E+00
GLoads	36	-.1133E+03	-.3821E+03	.4907E+01	-.2521E+03	.3945E+03	.0000E+00
GLoads	35	-.5258E+02	-.1119E+03	.4021E+01	-.1646E+03	-.2197E+03	.0000E+00
				PLATE 17			
GLoads	20	.1389E+03	.4144E+03	.1085E+02	.2516E+03	-.3901E+03	.0000E+00

========== I M A G E S 3 D ==========
= Copyright (c) 1984 Celestial Software Inc. =
==========

SOLVE PLATE LOADS/STRESSES Version 2.0 07/01/90

L

Load Case 4:UBC SEISMIC LOAD - SN & EW DIR.

GLoads	Node	Fx	Fy	Fz	Mx	My	Mz
GLoads	21	.4794E+02	.1246E+03	-.2113E+02	-.1241E+03	.5134E+02	.0000E+00
GLoads	37	-.1334E+03	-.4253E+03	-.1027E+02	-.3501E+03	.2028E+03	.0000E+00
GLoads	36	-.5338E+02	-.1137E+03	.2055E+02	-.3700E+01	-.2931E+03	.0000E+00
				PLATE 18			
GLoads	21	.1334E+03	.4608E+03	.2887E+02	.2355E+03	-.2898E+03	.0000E+00
GLoads	22	.9024E+02	.9833E+02	-.5498E+01	.9697E+02	-.2617E+03	.0000E+00
GLoads	38	-.1488E+03	-.4583E+03	-.4510E+02	.6457E+02	-.5919E+02	.0000E+00
GLoads	37	-.7480E+02	-.1008E+03	.2173E+02	.1171E+03	-.8082E+02	.0000E+00
				PLATE 19			
GLoads	22	.2127E+02	.5020E+03	-.9793E+02	.0000E+00	-.3437E+03	-.2259E+02
GLoads	23	-.3081E+02	.1153E+03	-.1791E+03	-.2138E+03	-.3535E+03	.0000E+00
GLoads	39	-.3118E+02	-.5084E+03	.1068E+03	-.7779E+02	-.1352E+03	.0000E+00
GLoads	38	.4072E+02	-.1088E+03	.1702E+03	.0000E+00	-.1284E+03	-.5905E+02
				PLATE 20			
GLoads	23	.2248E+02	.5410E+03	-.1698E+03	.4087E+02	.8822E+02	.0000E+00
GLoads	24	-.1297E+02	.8191E+02	-.1464E+03	-.2707E+03	-.5034E+03	.0000E+00
GLoads	40	-.2560E+02	-.5307E+03	.1561E+03	.8567E+02	-.4349E+03	.0000E+00
GLoads	39	.1609E+02	-.9223E+02	.1601E+03	.3533E+03	.2522E+03	.0000E+00
				PLATE 21			
GLoads	24	.7611E+01	.5156E+03	-.1913E+03	-.1405E+03	.3459E+03	.0000E+00
GLoads	25	.3487E+01	.6361E+02	-.1217E+03	-.2013E+03	-.4751E+03	.0000E+00
GLoads	41	-.9612E+01	-.5079E+03	.1797E+03	.2874E+03	-.4700E+03	.0000E+00
GLoads	40	-.1487E+01	-.7127E+02	.1333E+03	.2985E+03	.5042E+03	.0000E+00
				PLATE 22			
GLoads	25	.1648E+01	.4901E+03	-.1975E+03	-.2076E+03	.4830E+03	.0000E+00
GLoads	26	.8618E+01	.5000E+02	-.1075E+03	-.1355E+03	-.3209E+03	.0000E+00
GLoads	42	.1292E+01	-.4829E+03	.1911E+03	.2938E+03	-.4780E+03	.0000E+00
GLoads	41	-.1156E+02	-.5717E+02	.1139E+03	.2753E+03	.4694E+03	.0000E+00
				PLATE 23			
GLoads	26	-.1426E+02	.4635E+03	-.1940E+03	-.2528E+03	.4852E+03	.0000E+00
GLoads	27	.2634E+02	.3437E+02	-.1031E+03	.8065E+02	-.4028E+02	.0000E+00
GLoads	43	.1472E+02	-.4560E+03	.1946E+03	.3586E+03	-.2105E+03	.0000E+00
GLoads	42	-.2680E+02	-.4184E+02	.1025E+03	.7933E+02	.4021E+03	.0000E+00
				PLATE 24			
GLoads	27	-.3851E+02	.4311E+03	-.1833E+03	-.2272E+03	.2967E+03	.0000E+00
GLoads	28	.1250E+02	-.1618E+01	-.1108E+03	.0000E+00	.4413E+03	.9870E+02
GLoads	44	.5737E+02	-.4159E+03	.2003E+03	.0000E+00	.2552E+03	.1018E+03
GLoads	43	-.3136E+02	-.1357E+02	.9386E+02	-.1444E+03	.8984E+02	.0000E+00
				PLATE 25			
GLoads	28	.8772E+02	.3598E+03	-.2113E+02	.1548E+02	.5627E+03	.0000E+00
GLoads	29	.1652E+03	-.1084E+00	.4179E+02	.2152E+03	.2306E+03	.0000E+00
GLoads	45	-.7621E+02	-.3667E+03	.3579E+02	.1649E+03	-.5494E+00	.0000E+00

========== I M A G E S 3 D ==========
= Copyright (c) 1984 Celestial Software Inc. =
==========

SOLVE PLATE LOADS/STRESSES Version 2.0 07/01/90

L

Load Case 4:UBC SEISMIC LOAD - SN & EW DIR.

GLoads	Node	Fx	Fy	Fz	Mx	My	Mz
GLoads	44	-.1767E+03	.7087E+01	-.5646E+02	.5913E+02	.3840E+03	.0000E+00
				PLATE 26			
GLoads	29	.1076E+03	.3684E+03	-.2691E+02	-.8986E+02	.6164E+02	.0000E+00
GLoads	30	.1347E+03	.1408E+02	.1839E+02	.2990E+03	.4589E+03	.0000E+00
GLoads	46	-.9491E+02	-.3656E+03	.2920E+02	-.4419E+02	.3288E+03	.0000E+00
GLoads	45	-.1474E+03	-.1685E+02	.2067E+02	-.3525E+03	-.1276E+03	.0000E+00
				PLATE 27			
GLoads	30	.1130E+03	.3515E+03	-.1144E+02	.1113E+03	-.2190E+03	.0000E+00
GLoads	31	.1132E+03	.2076E+02	.2626E+01	.3054E+03	.4905E+03	.0000E+00
GLoads	47	-.1027E+03	-.3489E+03	.1405E+02	-.2570E+03	.4042E+03	.0000E+00
GLoads	46	-.1235E+03	-.2340E+02	-.5243E+01	-.3535E+03	-.4228E+03	.0000E+00
				PLATE 28			
GLoads	31	.1126E+03	.3346E+03	-.8672E+01	.1849E+03	-.3673E+03	.0000E+00
GLoads	32	.9944E+02	.2402E+02	-.5958E+01	.2652E+03	.4044E+03	.0000E+00
GLoads	48	-.1056E+03	-.3316E+03	.9319E+01	-.3511E+03	.4495E+03	.0000E+00
GLoads	47	-.1064E+03	-.2707E+02	.5310E+01	-.4209E+03	-.4356E+03	.0000E+00
				PLATE 29			
GLoads	32	.1053E+03	.3136E+03	.5757E+01	.2946E+03	-.4060E+03	.0000E+00
GLoads	33	.9188E+02	.2304E+02	-.1152E+02	.2339E+03	.2211E+03	.0000E+00
GLoads	49	-.1014E+03	-.3090E+03	-.1074E+02	-.3618E+03	.2776E+03	.0000E+00
GLoads	48	-.9572E+02	-.2757E+02	.1651E+02	-.2936E+03	-.4303E+03	.0000E+00
				PLATE 30			
GLoads	33	.9285E+02	.2842E+03	.1215E+02	.2192E+03	-.3137E+03	.0000E+00
GLoads	34	.8733E+02	.1473E+02	-.3530E+02	.6369E+01	-.8318E+02	.0000E+00
GLoads	50	-.9721E+02	-.2761E+03	-.6512E+01	-.4561E+03	-.1140E+01	.0000E+00
GLoads	49	-.8297E+02	-.2280E+02	.2966E+02	-.2787E+03	-.2361E+03	.0000E+00
				PLATE 31			
GLoads	35	.4112E+02	.2406E+03	.2145E+01	.2493E+03	-.3965E+03	.0000E+00
GLoads	36	.4932E+02	.1050E+03	-.7427E+01	.1051E+03	.3248E+03	.0000E+00
GLoads	52	-.5442E+02	-.2506E+03	-.6319E+01	-.2910E+03	.3016E+03	.0000E+00
GLoads	51	-.3601E+02	-.9505E+02	.1160E+02	-.1795E+03	-.4178E+03	.0000E+00
				PLATE 32			
GLoads	36	.8541E+02	.3057E+03	.1387E+02	.1507E+03	-.4262E+03	.0000E+00
GLoads	37	.5047E+02	.9112E+02	-.1720E+02	.8806E+02	.1292E+03	.0000E+00
GLoads	53	-.1026E+03	-.3098E+03	-.1217E+02	-.1289E+03	.2288E+03	.0000E+00
GLoads	52	-.3326E+02	-.8698E+02	.1549E+02	-.1830E+03	-.3331E+03	.0000E+00
				PLATE 33			
GLoads	37	.1259E+03	.3499E+03	.3765E+02	.1449E+03	-.2511E+03	.0000E+00
GLoads	38	.3952E+02	.9093E+02	-.2762E+02	.1043E+02	-.2369E+03	.0000E+00
GLoads	54	-.1451E+03	-.3571E+03	-.4654E+02	-.1922E+01	-.2472E+03	.0000E+00
GLoads	53	-.2024E+02	-.8371E+02	.3652E+02	.6719E+02	-.2783E+03	.0000E+00
				PLATE 34			
GLoads	38	.2578E+02	.3888E+03	-.5229E+02	.0000E+00	-.3170E+03	.8375E+02

KAISER ENGINEERS HANFORD S/N:801854 02/22/95
PAGE 145 Run ID=MN61973 08:50:59

```
============== I M A G E S  3 D ==============
= Copyright (c) 1984   Celestial Software Inc. =
===============================================
```

SOLVE PLATE LOADS/STRESSES Version 2.0 07/01/90

L

Load Case 4:UBC SEISMIC LOAD - SN & EW DIR.

GLoads	Node	Fx	Fy	Fz	Mx	My	Mz
GLoads	39	-.4353E+02	.9905E+02	-.1535E+03	-.1656E+03	-.3132E+03	.0000E+00
GLoads	55	-.3612E+02	-.3911E+03	.5202E+02	-.7578E+02	-.3042E+03	.0000E+00
GLoads	54	.5386E+02	-.9670E+02	.1538E+03	.0000E+00	-.3001E+03	.6533E+02
				PLATE 35			
GLoads	39	.2243E+02	.4051E+03	-.7723E+02	-.1100E+03	.1963E+03	.0000E+00
GLoads	40	-.1689E+02	.9283E+02	-.1411E+03	-.1855E+03	-.5793E+03	.0000E+00
GLoads	56	-.1774E+02	-.4028E+03	.8760E+02	.2201E+03	-.4767E+03	.0000E+00
GLoads	55	.1220E+02	-.9518E+02	.1308E+03	.1972E+03	.3228E+03	.0000E+00
				PLATE 36			
GLoads	40	.7788E+01	.4126E+03	-.1121E+03	-.1987E+03	.5100E+03	.0000E+00
GLoads	41	-.6310E+01	.7151E+02	-.1245E+03	-.2863E+03	-.6030E+03	.0000E+00
GLoads	57	-.7920E+01	-.4073E+03	.1146E+03	.2111E+03	-.6365E+03	.0000E+00
GLoads	56	.6442E+01	-.7684E+02	.1220E+03	.3064E+03	.5089E+03	.0000E+00
				PLATE 37			
GLoads	41	-.8709E+01	.3971E+03	-.1330E+03	-.2764E+03	.6036E+03	.0000E+00
GLoads	42	.9800E+01	.5285E+02	-.1032E+03	-.1957E+03	-.4855E+03	.0000E+00
GLoads	58	.8356E+01	-.3881E+03	.1349E+03	.2835E+03	-.4889E+03	.0000E+00
GLoads	57	-.9446E+01	-.6186E+02	.1013E+03	.2127E+03	.6522E+03	.0000E+00
				PLATE 38			
GLoads	42	-.2048E+02	.3754E+03	-.1542E+03	-.1774E+03	.5614E+03	.0000E+00
GLoads	43	.2344E+02	.3007E+02	-.8267E+02	-.1116E+03	-.1363E+03	.0000E+00
GLoads	59	.1961E+02	-.3662E+03	.1629E+03	.1663E+03	-.2431E+03	.0000E+00
GLoads	58	-.2257E+02	-.3928E+02	.7395E+02	.1877E+03	.4853E+03	.0000E+00
				PLATE 39			
GLoads	43	-.4298E+02	.3430E+03	-.1696E+03	-.1025E+03	.2570E+03	.0000E+00
GLoads	44	.4007E+02	.2213E+02	-.5148E+02	.0000E+00	.4378E+03	-.5650E+02
GLoads	60	.4487E+02	-.3360E+03	.1722E+03	.0000E+00	.3942E+03	-.3896E+02
GLoads	59	-.4195E+02	-.2921E+02	.4891E+02	-.5710E+02	.2275E+03	.0000E+00
				PLATE 40			
GLoads	44	.2235E+02	.2732E+03	-.4065E+02	-.3909E+02	.5792E+03	.0000E+00
GLoads	45	.1552E+03	.1691E+02	.4805E+02	.9037E+02	.1597E+03	.0000E+00
GLoads	61	-.3280E+02	-.2745E+03	.4521E+02	.8512E+02	.1390E+03	.0000E+00
GLoads	60	-.1448E+03	-.1562E+02	-.5261E+02	.2650E+02	.5365E+03	.0000E+00
				PLATE 41			
GLoads	45	.3301E+02	.2722E+03	-.2777E+02	.9723E+02	-.3155E+02	.0000E+00
GLoads	46	.1369E+03	.2544E+02	.2403E+02	.1718E+03	.4920E+03	.0000E+00
GLoads	62	-.3849E+02	-.2718E+03	.2562E+02	-.1943E+03	.4262E+03	.0000E+00
GLoads	61	-.1314E+03	-.2585E+02	-.2188E+02	-.1569E+03	-.1337E+03	.0000E+00
				PLATE 42			
GLoads	46	.4616E+02	.2691E+03	-.1258E+02	.2258E+03	-.3980E+03	.0000E+00
GLoads	47	.1203E+03	.2521E+02	.1284E+02	.3072E+03	.5537E+03	.0000E+00
GLoads	63	-.4672E+02	-.2667E+03	.1200E+02	-.2490E+03	.6153E+03	.0000E+00

KAISER ENGINEERS HANFORD S/N:801854 02/22/95
PAGE 146 Run ID=MN61973 08:51:00

```
============== I M A G E S  3 D ==============
= Copyright (c) 1984   Celestial Software Inc. =
===============================================
```

SOLVE PLATE LOADS/STRESSES Version 2.0 07/01/90

L

Load Case 4:UBC SEISMIC LOAD - SN & EW DIR.

GLoads	Node	Fx	Fy	Fz	Mx	My	Mz
GLoads	62	-.1198E+03	-.2763E+02	-.1226E+02	-.2781E+03	-.3943E+03	.0000E+00
				PLATE 43			
GLoads	47	.5335E+02	.2563E+03	.3205E+01	.3707E+03	-.5224E+03	.0000E+00
GLoads	48	.1047E+03	.2298E+02	-.5286E+00	.3011E+03	.4819E+03	.0000E+00
GLoads	64	-.5228E+02	-.2523E+03	-.4991E+01	-.3806E+03	.5025E+03	.0000E+00
GLoads	63	-.1058E+03	-.2703E+02	.2315E+01	-.2324E+03	-.5458E+03	.0000E+00
				PLATE 44			
GLoads	48	.6123E+02	.2417E+03	.1011E+02	.3435E+03	-.5012E+03	.0000E+00
GLoads	49	.8818E+02	.2185E+02	-.1029E+02	.3004E+03	.2696E+03	.0000E+00
GLoads	65	-.6461E+02	-.2386E+03	-.7445E+01	-.3435E+03	.3558E+03	.0000E+00
GLoads	64	-.8479E+02	-.2502E+02	.7623E+01	-.3044E+03	-.3932E+03	.0000E+00
				PLATE 45			
GLoads	49	.6081E+02	.2155E+03	.2678E+02	.3401E+03	-.3111E+03	.0000E+00
GLoads	50	.6451E+02	.2947E+02	-.1831E+02	.2723E+03	-.6583E+02	.0000E+00
GLoads	66	-.5919E+02	-.2113E+03	-.2677E+02	-.2368E+03	-.3775E+02	.0000E+00
GLoads	65	-.6613E+02	-.3375E+02	.1830E+02	-.1891E+03	-.2689E+03	.0000E+00
				PLATE 46			
GLoads	51	.7027E+01	.1172E+03	.9505E+01	.2152E+03	-.3425E+03	.0000E+00
GLoads	52	.1256E+02	.9192E+02	.5248E+01	.3069E+03	.3127E+03	.0000E+00
GLoads	68	-.1472E+02	-.1235E+03	.1191E+01	-.2350E+02	.3598E+03	.0000E+00
GLoads	67	-.4875E+01	-.8570E+02	-.1594E+02	-.1741E+03	-.2421E+03	.0000E+00
				PLATE 47			
GLoads	52	.4321E+02	.1606E+03	.1749E+02	.1671E+03	-.2813E+03	.0000E+00
GLoads	53	.2191E+01	.9376E+02	-.8771E+01	.2026E+03	.2343E+03	.0000E+00
GLoads	69	-.4623E+02	-.1668E+03	-.1615E+02	-.5992E+02	.7537E+02	.0000E+00
GLoads	68	.8284E+00	-.8751E+02	.7430E+01	-.1180E+03	-.3690E+03	.0000E+00
				PLATE 48			
GLoads	53	.8875E+02	.2147E+03	.1633E+02	-.1410E+03	-.1847E+03	.0000E+00
GLoads	54	-.1306E+02	.1048E+03	-.4689E+02	-.9094E+02	-.1062E+03	.0000E+00
GLoads	70	-.8722E+02	-.2267E+03	.1310E+02	-.1397E+03	-.4124E+02	.0000E+00
GLoads	69	.1153E+02	-.9286E+02	.1746E+02	-.3008E+03	-.1296E+03	.0000E+00
				PLATE 49			
GLoads	54	.5911E+02	.2637E+03	-.1595E+02	.0000E+00	-.2612E+03	-.1271E+03
GLoads	55	-.2905E+02	.9968E+02	-.9744E+02	.1126E+03	-.2598E+03	.0000E+00
GLoads	71	-.4075E+02	-.2606E+03	.5283E+02	.2582E+03	-.2598E+03	.0000E+00
GLoads	70	.1069E+02	-.1028E+03	.6056E+02	.0000E+00	-.3011E+03	-.1635E+03
				PLATE 50			
GLoads	55	.1677E+02	.2901E+03	-.4917E+02	-.2340E+03	.2411E+03	.0000E+00
GLoads	56	-.2902E+02	.7788E+02	-.1035E+03	-.2370E+03	-.5123E+03	.0000E+00
GLoads	72	-.2697E+02	-.2946E+03	.6087E+02	.1010E+03	-.6347E+03	.0000E+00
GLoads	71	.3921E+02	-.7340E+02	.9183E+02	.1007E+03	.3807E+02	.0000E+00
				PLATE 51			
GLoads	56	.4128E+01	.3052E+03	-.6990E+02	-.2896E+03	.4800E+03	.0000E+00

========== I M A G E S 3 D ==========
= Copyright (c) 1984 Celestial Software Inc. =
==========

SOLVE PLATE LOADS/STRESSES Version 2.0 07/01/90

L

Load Case 4:UBC SEISMIC LOAD - SN & EW DIR.

GLoads	Node	Fx	Fy	Fz	Mx	My	Mz
GLoads	57	-.1004E+02	.7433E+02	-.9058E+02	-.2269E+03	-.6515E+03	.0000E+00
GLoads	73	-.7441E+01	-.3021E+03	.8308E+02	.2408E+03	-.6048E+03	.0000E+00
GLoads	72	.1336E+02	-.7744E+02	.7740E+02	.1455E+03	.5053E+03	.0000E+00
				PLATE 52			
GLoads	57	-.8779E+01	.2983E+03	-.8905E+02	-.1969E+03	.6357E+03	.0000E+00
GLoads	58	.5013E+01	.6485E+02	-.7218E+02	-.2920E+03	-.5031E+03	.0000E+00
GLoads	74	.9788E+01	-.2937E+03	.9719E+02	.1363E+03	-.5051E+03	.0000E+00
GLoads	73	-.6021E+01	-.6949E+02	.6404E+02	.2696E+03	.6019E+03	.0000E+00
				PLATE 53			
GLoads	58	-.2699E+02	.2660E+03	-.1005E+03	-.1792E+03	.5066E+03	.0000E+00
GLoads	59	.2400E+02	.4957E+02	-.4269E+02	-.1604E+03	-.2188E+03	.0000E+00
GLoads	75	.2827E+02	-.2528E+03	.9536E+02	.1318E+03	-.8863E+02	.0000E+00
GLoads	74	-.2528E+02	-.6275E+02	.4783E+02	.1421E+03	.6109E+03	.0000E+00
				PLATE 54			
GLoads	59	-.3785E+02	.2493E+03	-.1329E+03	.5119E+02	.2344E+03	.0000E+00
GLoads	60	.4282E+02	.3878E+02	-.1446E+02	.0000E+00	.3689E+03	.3658E+02
GLoads	76	.3584E+02	-.2479E+03	.1443E+03	.0000E+00	.3662E+03	.3799E+02
GLoads	75	-.4081E+02	-.4019E+03	.3036E+01	.1326E+03	.2496E+03	.0000E+00
				PLATE 55			
GLoads	60	.9444E+01	.2049E+03	-.5473E+02	-.7332E+02	.4731E+03	.0000E+00
GLoads	61	.1204E+03	.1262E+02	.3690E+02	-.1170E+03	.1412E+03	.0000E+00
GLoads	77	-.1528E+02	-.2010E+03	.4508E+02	-.1645E+03	.1749E+03	.0000E+00
GLoads	76	-.1146E+03	-.1652E+02	-.2726E+02	-.3722E+02	.4542E+03	.0000E+00
				PLATE 56			
GLoads	61	.8375E+01	.1933E+03	-.2481E+02	.1888E+03	-.1466E+03	.0000E+00
GLoads	62	.1157E+03	.1319E+02	.2949E+02	.1428E+03	.4221E+03	.0000E+00
GLoads	78	-.1555E+02	-.1931E+03	.2668E+02	-.1552E+03	.5708E+03	.0000E+00
GLoads	77	-.1085E+03	-.1331E+02	-.3136E+02	-.7334E+02	.5628E+01	.0000E+00
				PLATE 57			
GLoads	62	.7168E+01	.1918E+03	-.7434E+01	.3297E+03	-.4541E+03	.0000E+00
GLoads	63	.1140E+03	.1755E+02	.1157E+02	.1563E+03	.5558E+03	.0000E+00
GLoads	79	-.8183E+01	-.1933E+03	.7347E+01	-.3100E+03	.5980E+03	.0000E+00
GLoads	78	-.1130E+03	-.1605E+02	-.1148E+02	-.8503E+02	-.4129E+03	.0000E+00
				PLATE 58			
GLoads	63	.3065E+01	.1818E+03	.9531E+01	.3251E+03	-.6253E+03	.0000E+00
GLoads	64	.1007E+03	.3059E+02	.9399E+00	.2644E+03	.3963E+03	.0000E+00
GLoads	80	.3374E+01	-.1811E+03	-.1472E+02	-.2026E+03	.5334E+03	.0000E+00
GLoads	79	-.1072E+03	-.3122E+02	.4250E+01	-.1566E+03	-.5135E+03	.0000E+00
				PLATE 59			
GLoads	64	.9452E+00	.1523E+03	.3184E+02	.4207E+03	-.5057E+03	.0000E+00
GLoads	65	.7176E+02	.3903E+02	-.9437E+01	.2528E+03	.1215E+03	.0000E+00
GLoads	81	.1203E+02	-.1445E+03	-.4582E+02	-.2063E+03	.7779E+02	.0000E+00

========== I M A G E S 3 D ==========
= Copyright (c) 1984 Celestial Software Inc. =
==========

SOLVE PLATE LOADS/STRESSES Version 2.0 07/01/90

L

Load Case 4:UBC SEISMIC LOAD - SN & EW DIR.

GLoads	Node	Fx	Fy	Fz	Mx	My	Mz
GLoads	80	-.8473E+02	-.4681E+02	.2342E+02	.2563E+02	-.5317E+03	.0000E+00
				PLATE 60			
GLoads	65	.2358E+02	.1389E+03	.3400E+02	.2798E+03	-.2084E+03	.0000E+00
GLoads	66	.3748E+02	.5269E+02	-.1156E+02	.3005E+03	-.1891E+03	.0000E+00
GLoads	82	-.3335E+02	-.1413E+03	-.4039E+02	-.3219E+02	-.2763E+03	.0000E+00
GLoads	81	-.2771E+02	-.5031E+02	.1796E+02	-.5452E+02	-.1142E+03	.0000E+00
				PLATE 61			
GLoads	67	-.4083E+02	.1348E+02	.2239E+02	.2928E+03	-.1321E+03	.0000E+00
GLoads	68	.1420E+02	.7641E+02	.6122E+01	.2627E+03	.2692E+03	.0000E+00
GLoads	84	.4811E+02	-.2282E+02	-.3705E+02	.1163E+03	-.2020E+03	.0000E+00
GLoads	83	-.2148E+02	-.6707E+02	.8535E+01	.1124E+03	-.3578E+03	.0000E+00
				PLATE 62			
GLoads	68	-.3621E+02	.3883E+02	.2115E+02	-.1211E+03	-.2601E+03	.0000E+00
GLoads	69	.1201E+02	.9218E+02	-.1115E+02	.3680E+03	.1349E+03	.0000E+00
GLoads	85	.5627E+02	-.4350E+02	-.2877E+02	.3050E+03	-.1184E+02	.0000E+00
GLoads	84	-.3208E+02	-.8751E+02	.1878E+02	-.2769E+03	-.4087E+03	.0000E+00
				PLATE 63			
GLoads	69	-.1321E+02	.7180E+02	.4574E+02	-.7271E+01	-.8069E+02	.0000E+00
GLoads	70	.9540E+01	.8033E+02	-.2351E+02	.2920E+03	-.1278E+03	.0000E+00
GLoads	86	.3386E+02	-.7294E+02	-.9148E+02	.3155E+03	-.7650E+03	.0000E+00
GLoads	85	-.3019E+02	-.7919E+02	.6925E+02	.1112E+02	-.5982E+03	.0000E+00
				PLATE 64			
GLoads	70	.2128E+02	.1678E+03	-.4081E+01	.0000E+00	-.3243E+03	.2784E+03
GLoads	71	-.4885E+02	.4351E+02	-.7449E+02	-.1960E+02	.2617E+02	.0000E+00
GLoads	87	-.2148E+02	-.1829E+03	-.3192E+02	-.9744E+02	-.1012E+03	.0000E+00
GLoads	86	.4905E+02	-.2835E+02	.1105E+03	.0000E+00	-.6909E+03	.3628E+03
				PLATE 65			
GLoads	71	.9682E+01	.1819E+03	-.2944E+02	-.3392E+03	.1956E+03	.0000E+00
GLoads	72	-.2643E+02	.7600E+02	-.2584E+02	-.4598E+02	-.4425E+03	.0000E+00
GLoads	88	.2174E+02	-.1741E+03	.6526E+02	.1467E+03	-.2048E+03	.0000E+00
GLoads	87	-.4994E+01	-.8384E+02	-.9977E+01	-.2220E+03	.3791E+03	.0000E+00
				PLATE 66			
GLoads	72	-.6704E+00	.1875E+03	-.7171E+02	-.2005E+03	.5719E+03	.0000E+00
GLoads	73	-.1287E+02	.4816E+02	-.4504E+01	-.2670E+03	.5646E+03	.0000E+00
GLoads	89	.1079E+02	-.1834E+03	.1236E+03	.1825E+02	-.4898E+03	.0000E+00
GLoads	88	.2750E+01	-.5225E+02	-.4738E+02	.7694E+02	.4503E+03	.0000E+00
				PLATE 67			
GLoads	73	-.1438E+02	.2149E+03	-.1019E+03	-.2435E+03	.5676E+03	.0000E+00
GLoads	74	-.3642E+00	.1832E+02	-.1002E+02	-.2474E+03	-.5947E+03	.0000E+00
GLoads	90	.1044E+02	-.2169E+03	.1515E+03	.3574E+02	-.4138E+03	.0000E+00
GLoads	89	.4307E+01	-.1631E+02	-.3962E+02	.4954E+02	.5972E+03	.0000E+00
				PLATE 68			
GLoads	74	-.2486E+02	.2295E+03	-.9429E+02	-.3114E+02	.4889E+03	.0000E+00

========== I M A G E S 3 D ==========
= Copyright (c) 1984 Celestial Software Inc. =
==========

SOLVE PLATE LOADS/STRESSES Version 2.0 07/01/90

L

Load Case 4:UBC SEISMIC LOAD - SN & EW DIR.

GLoads	Node	Fx	Fy	Fz	Mx	My	Mz
GLoads	75	.1149E+02	.2660E+02	-.2469E+02	-.3386E+03	-.2732E+03	.0000E+00
GLoads	91	.6595E+01	-.2377E+03	.1216E+03	-.1815E+03	-.3304E+03	.0000E+00
GLoads	90	.6768E+01	-.1845E+02	-.2635E+01	.1838E+03	.3951E+03	.0000E+00
				PLATE 69			
GLoads	75	-.3966E+02	.1578E+03	-.3300E+02	.7423E+02	.1122E+03	.0000E+00
GLoads	76	.4529E+02	.2878E+02	-.2729E+02	.0000E+00	.2911E+03	-.2327E+02
GLoads	92	.2366E+02	-.1357E+03	-.3972E+02	.0000E+00	.4333E+03	.5005E+01
GLoads	91	-.2929E+02	-.5087E+02	.1000E+03	.6234E+02	.2321E+03	.0000E+00
				PLATE 70			
GLoads	76	-.2606E+02	.1341E+03	-.3560E+02	.1267E+03	.3562E+03	.0000E+00
GLoads	77	.1169E+03	-.3264E+02	.4295E+02	-.6925E+02	.4160E+02	.0000E+00
GLoads	93	.1123E+02	-.1321E+03	.3051E+02	-.3200E+02	.2126E+03	.0000E+00
GLoads	92	-.1021E+03	.3059E+02	-.3786E+02	.1767E+03	.5037E+03	.0000E+00
				PLATE 71			
GLoads	77	-.3295E+02	.1407E+03	-.1684E+02	.3071E+03	-.2222E+03	.0000E+00
GLoads	78	.1345E+03	-.3863E+02	.2519E+02	-.3992E+02	.4171E+03	.0000E+00
GLoads	94	.3913E+02	-.1454E+03	-.4119E+01	-.2169E+03	.3856E+03	.0000E+00
GLoads	93	-.1406E+03	.4337E+02	-.4239E+01	.1795E+03	-.2609E+03	.0000E+00
				PLATE 72			
GLoads	78	-.4573E+02	.1416E+03	-.5539E+00	.2802E+03	-.5750E+03	.0000E+00
GLoads	79	.1355E+03	-.1836E+02	.1291E+02	.1312E+03	.4947E+03	.0000E+00
GLoads	95	.4869E+02	-.1445E+03	-.2667E+01	-.1080E+03	.5936E+03	.0000E+00
GLoads	94	-.1385E+03	.2126E+02	-.9686E+01	.3636E+02	-.3581E+03	.0000E+00
				PLATE 73			
GLoads	79	-.6004E+02	.1367E+03	.1533E+02	.3354E+03	-.5793E+03	.0000E+00
GLoads	80	.1340E+03	.7271E+01	.6486E+01	.1737E+03	.4876E+03	.0000E+00
GLoads	96	.6132E+02	-.1413E+03	-.1182E+02	-.1531E+02	.4580E+03	.0000E+00
GLoads	95	-.1353E+03	-.2642E+01	-.1000E+02	.1063E+03	-.4472E+03	.0000E+00
				PLATE 74			
GLoads	80	-.9246E+02	.1144E+03	.2466E+02	.3232E+01	-.4893E+03	.0000E+00
GLoads	81	.1288E+03	.5569E+02	-.4157E+02	-.2317E+03	.4647E+02	.0000E+00
GLoads	97	.1206E+03	-.1215E+03	.2529E+02	-.1513E+03	.3788E+03	.0000E+00
GLoads	96	-.1569E+03	-.4862E+02	-.8378E+01	-.8530E+02	-.1828E+03	.0000E+00
				PLATE 75			
GLoads	81	-.1529E+03	.3287E+02	.1093E+03	.4924E+03	-.1008E+02	.0000E+00
GLoads	82	.1066E+03	.1079E+03	.6422E+02	.1514E+04	-.8587E+03	.0000E+00
GLoads	98	.2846E+03	-.2382E+02	-.2048E+03	.1918E+04	-.1129E+04	.0000E+00
GLoads	97	-.2382E+03	-.1169E+03	.3136E+02	.8456E+03	-.1351E+03	.0000E+00
				PLATE 76			
GLoads	83	-.3426E+02	-.1822E+02	.1149E+02	.3071E+03	.4838E+03	.0000E+00
GLoads	84	.2294E+02	.2258E+02	.8039E+02	.2638E+03	.2957E+03	.0000E+00
GLoads	100	.2212E+02	-.8911E+01	.1009E+03	.4419E+03	.7186E+03	.0000E+00

========== I M A G E S 3 D ==========
= Copyright (c) 1984 Celestial Software Inc. =
==========

SOLVE PLATE LOADS/STRESSES Version 2.0 07/01/90

L

Load Case 4:UBC SEISMIC LOAD - SN & EW DIR.

GLoads	Node	Fx	Fy	Fz	Mx	My	Mz
GLoads	99	-.1080E+02	.4556E+01	-.1927E+03	.5032E+03	.9788E+03	.0000E+00
				PLATE 77			
GLoads	84	-.7088E+02	.2663E+01	-.3021E+02	-.1032E+03	.3150E+03	.0000E+00
GLoads	85	.2495E+02	.5137E+02	.4890E+02	.2014E+03	.4416E+03	.0000E+00
GLoads	101	.6632E+02	.4086E+01	.7532E+02	.2361E+03	.4902E+03	.0000E+00
GLoads	100	-.2039E+02	-.5812E+02	-.9402E+02	-.2587E+02	.4510E+03	.0000E+00
				PLATE 78			
GLoads	85	-.8294E+02	-.1377E+02	-.5747E+02	-.5176E+03	.1684E+03	.0000E+00
GLoads	86	.5602E+02	.1148E+02	-.1009E+03	-.7817E+03	.1248E+03	.0000E+00
GLoads	102	.9286E+02	.2102E+02	.2096E+03	-.8091E+03	.6575E+03	.0000E+00
GLoads	101	-.6594E+02	-.1873E+02	-.5115E+02	-.5054E+03	.5338E+03	.0000E+00
				PLATE 79			
GLoads	86	.1638E+03	-.1841E+02	.2004E+02	.0000E+00	-.6271E+03	-.8057E+03
GLoads	87	-.2052E+02	.1395E+03	.1144E+03	.5251E+03	-.1985E+03	.0000E+00
GLoads	103	-.1422E+03	.3631E+01	.1059E+03	.0000E+00	-.6817E+03	-.3443E+03
GLoads	102	-.1013E+01	-.1247E+03	-.2403E+03	.0000E+00	-.1016E+04	-.6886E+03
				PLATE 80			
GLoads	87	.1080E+02	.3078E+02	-.3631E+02	-.2056E+03	-.7943E+02	.0000E+00
GLoads	88	-.5800E+02	.8513E+02	.9953E+02	-.7538E+02	-.2635E+03	.0000E+00
GLoads	104	-.7251E+02	-.1784E+02	.8284E+02	.0000E+00	-.8782E+03	.2048E+03
GLoads	103	.1197E+03	-.9807E+02	-.1461E+03	.0000E+00	-.8018E+03	.2929E+03
				PLATE 81			
GLoads	88	-.2681E+01	.4471E+02	-.8123E+02	-.1483E+03	.1802E+02	.0000E+00
GLoads	89	-.3363E+02	.2962E+02	.6637E+02	-.3345E+02	-.3001E+03	.0000E+00
GLoads	105	-.2725E+02	-.4544E+02	.9836E+02	.0000E+00	-.4597E+03	.1578E+03
GLoads	104	.6356E+02	-.2889E+02	-.8350E+02	.0000E+00	-.2018E+03	.2596E+03
				PLATE 82			
GLoads	89	-.1765E+02	.7358E+02	-.1141E+03	-.3434E+02	.1927E+03	.0000E+00
GLoads	90	-.1998E+02	.6623E+01	.5203E+02	-.1890E+03	-.1934E+03	.0000E+00
GLoads	106	.2400E+02	-.7275E+02	.1345E+03	.0000E+00	-.1297E+03	.2634E+03
GLoads	105	.1362E+02	-.7454E+01	-.7242E+02	.0000E+00	.1928E+03	.1341E+03
				PLATE 83			
GLoads	90	-.3342E+02	.1322E+03	-.1647E+03	-.3058E+02	.2122E+03	.0000E+00
GLoads	91	.1632E+02	-.1569E+02	.1870E+02	-.7147E+02	-.1007E+03	.0000E+00
GLoads	107	.5163E+02	-.1398E+03	.2251E+03	.0000E+00	.3463E+03	.8806E+02
GLoads	106	-.3453E+02	.2325E+02	-.7905E+02	.0000E+00	.5955E+03	.9207E+02
				PLATE 84			
GLoads	91	-.2982E+02	.2077E+03	-.2041E+03	.1907E+03	.1990E+03	.0000E+00
GLoads	92	.4455E+02	-.7413E+02	-.5197E+02	.0000E+00	.2930E+03	.1500E+02
GLoads	108	.5678E+02	-.1985E+03	.3742E+03	.0000E+00	.5427E+03	.5154E+02
GLoads	107	-.7151E+02	.6489E+02	-.1181E+03	.0000E+00	.5359E+03	-.1189E+03
				PLATE 85			
GLoads	92	-.3175E+02	.4823E+02	.7630E+01	.4333E+03	.2769E+03	.0000E+00

========== I M A G E S 3 D ==========
= Copyright (c) 1984 Celestial Software Inc. =
==========

SOLVE PLATE LOADS/STRESSES Version 2.0 07/01/90

L

Load Case 4:UBC SEISMIC LOAD - SN & EW DIR.

GLoads	Node	Fx	Fy	Fz	Mx	My	Mz
GLoads	93	.1406E+03	-.5888E+02	.4010E+02	-.9987E+02	.1648E+03	.0000E+00
GLoads	109	.7454E+02	-.5954E+02	.5248E+02	-.2466E+02	.4773E+03	.0000E+00
GLoads	108	-.1834E+03	.7019E+02	-.1002E+03	.4788E+03	.4852E+03	.0000E+00
				PLATE 86			
GLoads	93	-.4660E+02	.5317E+02	-.3096E+02	-.4766E+02	-.1166E+03	.0000E+00
GLoads	94	.1111E+03	-.1706E+02	.2659E+02	-.3580E+02	.1786E+03	.0000E+00
GLoads	110	.5707E+02	-.5313E+02	.3669E+02	.3682E+02	.5687E+03	.0000E+00
GLoads	109	-.1216E+03	.1703E+02	-.3233E+02	-.2541E+02	.3292E+03	.0000E+00
				PLATE 87			
GLoads	94	-.4717E+02	.4679E+02	.2262E+02	.2163E+03	-.2061E+03	.0000E+00
GLoads	95	.9118E+02	-.5223E+00	.1681E+02	-.7492E+01	.1624E+03	.0000E+00
GLoads	111	.4586E+02	-.4736E+02	-.1321E+02	.1296E+03	.2029E+03	.0000E+00
GLoads	110	-.8987E+02	.1086E+01	-.2621E+02	.3121E+03	-.1047E+03	.0000E+00
				PLATE 88			
GLoads	95	-.4001E+02	.5322E+02	.3127E+02	.9247E+01	-.3089E+03	.0000E+00
GLoads	96	.8594E+02	.4485E+01	.1724E+01	.7997E+02	-.8175E-01	.0000E+00
GLoads	112	.2917E+02	-.5445E+02	-.5972E+02	.2680E+03	-.1627E+03	.0000E+00
GLoads	111	-.7510E+02	-.3254E+01	.2673E+02	.1872E+03	-.4080E+03	.0000E+00
				PLATE 89			
GLoads	96	-.2575E+02	.9104E+02	.5388E+02	.2063E+02	-.2751E+03	.0000E+00
GLoads	97	.1130E+03	.6386E+01	-.1498E+02	.9587E+02	-.6472E+02	.0000E+00
GLoads	113	-.1692E+02	-.1013E+03	-.1076E+03	.2878E+03	-.7176E+03	.0000E+00
GLoads	112	-.7032E+02	.3872E+01	.6870E+02	.2376E+03	-.8017E+03	.0000E+00
				PLATE 90			
GLoads	97	-.3082E+02	.1376E+03	-.6261E+01	-.7901E+03	-.1790E+03	.0000E+00
GLoads	98	.1953E+03	-.5763E+02	-.2117E+03	-.1347E+04	-.7191E+03	.0000E+00
GLoads	114	-.1018E+03	-.1213E+03	.8229E+02	-.1010E+04	-.7053E+03	.0000E+00
GLoads	113	-.6267E+02	.4133E+02	.1357E+03	-.4488E+03	-.3592E+03	.0000E+00
				PLATE 91			
GLoads	122	.2688E+03	.6715E+03	-.8468E+02	-.7406E+03	-.9483E+02	.0000E+00
GLoads	2	.3480E+02	.2918E+03	-.5952E+02	-.6647E+03	-.1851E+02	.0000E+00
GLoads	19	-.2269E+03	-.6258E+03	.6438E+02	-.8408E+03	.1584E+03	.0000E+00
GLoads	124	-.7671E+02	-.3375E+03	.7981E+02	-.9263E+03	.5225E+02	.0000E+00
				PLATE 92			
GLoads	124	.5032E+02	.3498E+03	-.5040E+02	-.2173E+03	-.1340E+03	.0000E+00
GLoads	19	.6957E+02	.2480E+03	-.3095E+02	-.2235E+03	.8857E+02	.0000E+00
GLoads	35	-.6781E+02	-.3799E+03	.3683E+02	-.6650E+03	.2014E+03	.0000E+00
GLoads	126	-.5209E+02	-.2179E+03	.4453E+02	-.6841E+03	-.3843E+02	.0000E+00
				PLATE 93			
GLoads	126	.1893E+02	.1823E+03	-.1480E+02	.2098E+03	-.1291E+03	.0000E+00
GLoads	35	.3110E+02	.1649E+03	.3164E+01	.2204E+03	.1546E+03	.0000E+00
GLoads	51	-.2884E+02	-.2199E+03	.9078E+01	-.3172E+03	.2515E+03	.0000E+00

========== I M A G E S 3 D ==========
= Copyright (c) 1984 Celestial Software Inc. =
==========

SOLVE PLATE LOADS/STRESSES Version 2.0 07/01/90

L

Load Case 4:UBC SEISMIC LOAD - SN & EW DIR.

GLoads	Node	Fx	Fy	Fz	Mx	My	Mz
GLoads	128	-.2118E+02	-.1273E+03	.2560E+01	-.3691E+03	-.3208E+02	.0000E+00
				PLATE 94			
GLoads	128	-.9575E+01	.7083E+02	.2589E+02	.5889E+03	-.8463E+02	.0000E+00
GLoads	51	.1034E+02	.1033E+03	.1797E+02	.3982E+03	.1563E+03	.0000E+00
GLoads	67	.4719E+01	-.1042E+03	-.1776E+02	-.9184E+02	.6451E+02	.0000E+00
GLoads	130	-.5485E+01	-.6999E+02	-.2610E+02	.6969E+02	-.1319E+03	.0000E+00
				PLATE 95			
GLoads	130	-.3161E+02	-.1177E+02	.6188E+02	.9493E+03	.1164E+02	.0000E+00
GLoads	67	-.1171E+02	.6457E+02	.6270E+02	.9913E+03	.4485E+02	.0000E+00
GLoads	83	.1623E+02	-.5013E+01	-.4720E+02	.7790E+03	.9193E+02	.0000E+00
GLoads	132	.2709E+02	-.4779E+02	-.7738E+02	.7063E+03	.1616E+03	.0000E+00
				PLATE 96			
GLoads	132	-.5808E+02	-.4423E+02	.1113E+03	.5064E+03	-.1752E+03	.0000E+00
GLoads	83	-.2300E+02	-.8578E+00	.6759E+02	.7613E+03	-.3674E+03	.0000E+00
GLoads	99	.7599E+02	.6775E+02	-.1851E+03	.1005E+04	-.1002E+04	.0000E+00
GLoads	134	.5086E+01	-.2266E+02	.6149E+01	.6790E+03	-.8045E+03	.0000E+00
				PLATE 97			
GLoads	17	.1126E+03	.2524E+03	-.7256E+02	-.6518E+03	-.1198E+03	.0000E+00
GLoads	123	.5919E+02	.8692E+01	-.8457E+02	-.8680E+03	-.8090E+02	.0000E+00
GLoads	125	-.9623E+02	-.1977E+03	.7466E+02	-.1068E+04	-.5995E+01	.0000E+00
GLoads	34	-.7557E+02	-.6346E+02	.8246E+02	-.8689E+03	.8583E+01	.0000E+00
				PLATE 98			
GLoads	34	.7055E+02	.2420E+03	-.2222E+02	-.4096E+02	-.1568E+03	.0000E+00
GLoads	125	.6606E+02	.7842E+02	-.4531E+02	-.2017E+03	-.1258E+03	.0000E+00
GLoads	127	-.6905E+02	-.2287E+03	.2637E+02	-.6830E+03	-.5128E+02	.0000E+00
GLoads	50	-.6756E+02	-.9173E+02	.4116E+02	-.5600E+03	-.4492E+02	.0000E+00
				PLATE 99			
GLoads	50	.5233E+02	.2158E+03	.3143E+02	.4329E+03	-.1803E+03	.0000E+00
GLoads	127	.3684E+02	.1280E+03	.1918E+01	.4724E+03	-.2128E+03	.0000E+00
GLoads	129	-.5696E+02	-.2261E+03	-.4887E+02	-.4147E+02	-.3052E+03	.0000E+00
GLoads	66	-.3221E+02	-.1178E+03	.1552E+02	-.1301E+03	-.2407E+03	.0000E+00
				PLATE 100			
GLoads	66	-.3686E+01	.1525E+03	.7131E+02	.7469E+03	-.3211E+01	.0000E+00
GLoads	129	.2627E+02	.1435E+03	.7578E+02	.1175E+04	-.1826E+03	.0000E+00
GLoads	131	.2776E+02	-.1683E+03	-.8119E+02	.9233E+03	-.6850E+02	.0000E+00
GLoads	82	-.5035E+02	-.1276E+03	-.6590E+02	.3909E+03	.1461E+03	.0000E+00
				PLATE 101			
GLoads	82	-.4856E+02	.1774E+02	.8976E+02	.1934E+04	.9600E+03	.0000E+00
GLoads	131	-.6365E+02	.1350E+03	.1247E+03	.7007E+03	.4516E+03	.0000E+00
GLoads	133	-.6742E+02	.1925E+02	.3832E+02	.9357E+03	.7005E+03	.0000E+00
GLoads	98	.1796E+03	-.1720E+03	-.2528E+03	.2327E+04	.1148E+04	.0000E+00
				PLATE 102			
GLoads	98	.1321E+03	.8125E+02	-.1984E+03	-.1511E+04	.3325E+03	.0000E+00

```
KAISER ENGINEERS HANFORD  S/N:801854                                  02/22/95
PAGE  153                    Run ID=MN61973                           08:51:07
              =============== I M A G E S  3 D ===============
              = Copyright (c) 1984   Celestial Software Inc. =
              ================================================

            SOLVE PLATE LOADS/STRESSES   Version 2.0  07/01/90

      L

Load Case  4:UBC SEISMIC LOAD - SN & EW DIR.

GLoads Node     Fx          Fy          Fz          Mx          My          Mz
------ ---- ---------- ---------- ---------- ---------- ---------- ----------
GLoads  133  .3314E+02 -.8392E+02 -.1455E+02 -.5413E+03  .1123E+03  .0000E+00
GLoads  135 -.5716E+02 -.5243E+02  .2647E+02 -.2707E+03 -.1881E+03  .0000E+00
GLoads  114 -.1081E+03  .5510E+02  .1864E+03 -.1190E+04 -.1822E+02  .0000E+00
```

```
KAISER ENGINEERS HANFORD  S/N:801854                                  02/22/95
PAGE  154                    Run ID=MN61973                           08:51:07
              =============== I M A G E S  3 D ===============
              = Copyright (c) 1984   Celestial Software Inc. =
              ================================================

            SOLVE PLATE LOADS/STRESSES   Version 2.0  07/01/90

      L

Load Case  4:UBC SEISMIC LOAD - SN & EW DIR.

                  MAXIMUM STRESS SUMMARY FOR PLATES
                  WITHIN SPECIFIED RANGE    1-  102

          Maximum (absolute) Stress =  .3084E+03 at Plate   36

           Plate   Sigma  X   Sigma  Y    Tau XY    Von Mises
           -----  ---------- ---------- ---------- ----------
              36   .3084E+03  .1628E+03 -.2459E+02  .2706E+03
```

========== I M A G E S 3 D ==========
= Copyright (c) 1984 Celestial Software Inc. =
==========

SOLVE REACTIONS Version 2.0 07/01/90

L

Load Case 4:UBC SEISMIC LOAD - SN & EW DIR.

REACTIONS

Node	Fx	Fy	Fz	Mx	My	Mz
1	.1970E+02	.3143E+03	-.1386E+03	.0000E+00	.0000E+00	.0000E+00
2	.2906E+03	.9603E+03	-.1047E+03	.0000E+00	-.8436E+03	-.6534E+02
3	.2339E+03	.6345E+03	-.3486E+02	.0000E+00	-.2092E+03	.0000E+00
4	.2275E+03	.7093E+03	-.1610E+02	.0000E+00	-.2811E+03	.0000E+00
5	-.1609E+02	.1183E+04	-.3547E+03	-.3381E+03	-.2128E+04	-.8899E+02
6	.2259E+02	.7722E+03	-.4302E+03	.0000E+00	-.3149E+03	.0000E+00
7	.4749E+02	.6973E+03	-.4040E+03	.0000E+00	-.1859E+03	.0000E+00
8	.4448E+02	.6615E+03	-.3704E+03	.0000E+00	.8609E+01	.0000E+00
9	.4501E+02	.6215E+03	-.3397E+03	.0000E+00	.2010E+03	.0000E+00
10	.1969E+02	.5738E+03	-.3078E+03	.0000E+00	.3076E+03	.0000E+00
11	.2926E+03	.7523E+03	-.9125E+02	-.2886E+03	.4519E+04	-.7406E+03
12	.3402E+03	.4734E+03	-.1469E+02	.0000E+00	.3560E+03	.0000E+00
13	.3127E+03	.4634E+03	-.4287E+02	.0000E+00	.3005E+03	.0000E+00
14	.2799E+03	.4583E+03	-.4556E+02	.0000E+00	.1571E+03	.0000E+00
15	.2493E+03	.4408E+03	-.5150E+02	.0000E+00	.2651E+01	.0000E+00
16	.2154E+03	.4063E+03	-.3736E+02	.0000E+00	-.1004E+03	.0000E+00
17	.1804E+03	.4272E+03	-.1429E+03	.0000E+00	-.8614E+03	-.5152E+02
18	.2130E+02	.1990E+03	.2827E+02	.0000E+00	.0000E+00	.0000E+00
115	.7963E+04	.0000E+00	-.8039E+04	.0000E+00	.0000E+00	.0000E+00
116	.3619E+04	.1041E+05	-.7842E+03	.0000E+00	.0000E+00	.0000E+00
117	.7830E+03	.7957E+04	-.1829E+04	.0000E+00	.0000E+00	.0000E+00
118	.1827E+04	.7958E+04	-.7852E+03	.0000E+00	.0000E+00	.0000E+00
119	.7840E+03	.1041E+05	-.3620E+04	.0000E+00	.0000E+00	.0000E+00
122	.2889E+03	.9019E+03	-.1059E+03	.0000E+00	-.5948E+03	-.8074E+02
123	.7655E+02	.6657E+02	-.1048E+03	.0000E+00	-.4700E+03	-.4667E+02

========== I M A G E S 3 D ==========
= Copyright (c) 1984 Celestial Software Inc. =
==========

SOLVE BEAM LOADS/STRESSES Version 2.0 07/01/90

L

Load Case 5:UBC SEISMIC LOAD - NS & WE

BEAM LOADS AND/OR STRESSES

GLoads Node LLoads Node Stress Node Stress Node	Fx Axial Axial Maximum	Fy Y-Shear Y-Shear Minimum	Fz Z-Shear Z-Shear Cmb. Shear	Mx Torsion Torsion	My Y-Bending Y-Bending	Mz Z-Bending Z-Bending
			BEAM NO. 1			
GLoads 1	-.1949E+02	-.6938E+02	.8238E+02	.4547E-12	-.2842E-13	-.1137E-12
GLoads 99	-.3499E+02	.2147E+03	-.2790E+02	-.5325E+03	-.4263E+03	-.1023E+04
LLoads 1	-.9573E+02	-.4936E+02	.1949E+02	.1749E-13	.1159E-12	-.4547E-12
LLoads 99	.2089E+03	-.5681E+02	.3499E+02	-.3497E-13	.1108E+04	.5325E+03
			BEAM NO. 2			
GLoads 18	-.2179E+02	.1337E+02	.9071E+01	.6395E-13	.0000E+00	.0000E+00
GLoads 114	-.3147E+02	.1286E+03	.4419E+02	.3336E+03	.2227E+03	-.6392E+03
LLoads 18	.1561E+02	.4164E+01	-.2179E+02	.0000E+00	.0000E+00	.6395E-13
LLoads 114	.1360E+03	-.6083E+00	-.3147E+02	.5426E-14	-.6769E+03	.3336E+03
			BEAM NO. 3			
GLoads 99	.1527E+03	.8482E+02	-.4157E+03	.2936E+04	.4544E+03	.1123E+04
GLoads 108	-.1915E+03	.1844E+02	.4544E+03	.1512E+03	.1378E+04	.2374E+03
LLoads 99	.4420E+03	-.8482E+02	.2793E+02	.1562E+03	-.4544E+03	-.3139E+04
LLoads 108	-.4931E+03	-.1844E+02	-.8123E+01	-.1562E+03	-.1378E+04	-.2341E+03
			BEAM NO. 4			
GLoads 114	-.2889E+03	.6052E+02	.2735E+03	-.6405E+03	-.1061E+04	-.7032E+03
GLoads 102	.2393E+03	.7167E+02	-.2239E+03	.1159E+04	-.8689E+03	.1211E+04
LLoads 114	.3975E+03	-.6052E+02	-.1521E+02	-.5464E+02	.1061E+04	-.9496E+03
LLoads 102	-.3274E+03	-.7167E+02	.1445E+02	.5464E+02	.8689E+03	.1675E+04
			BEAM NO. 5			
GLoads 98	.8512E+03	.2689E+02	-.9995E+03	.5678E+03	-.9977E+03	.2301E+03
GLoads 115	-.8876E+03	.7031E+02	.1036E+04	.9956E+03	-.5236E+03	.1138E+04
LLoads 98	-.1313E+04	-.2689E+02	-.1762E+02	-.2007E+03	.9977E+03	.5789E+03
LLoads 115	.1364E+04	-.7031E+02	.1419E+02	.2007E+03	.5236E+03	.1499E+04
			BEAM NO. 6			
GLoads 92	-.2107E+02	.4088E+02	-.1583E+03	-.5520E+03	.2680E+04	.1894E+03
GLoads 115	-.8365E+01	.3760E+02	.1877E+03	.4338E+03	.1706E+04	-.1435E+03
LLoads 92	-.1552E+03	-.4088E+02	.3773E+02	-.2354E+02	-.2680E+04	-.5831E+03
LLoads 115	.1719E+03	-.3760E+02	-.7583E+02	.2354E+02	-.1706E+04	.4563E+03
			BEAM NO. 7			
GLoads 86	.3046E+03	.5917E+02	-.7979E+02	.4416E+03	-.2883E+04	.6061E+03
GLoads 115	-.3179E+03	-.2361E+02	.9312E+02	.4275E+03	-.1232E+04	.5528E+03
LLoads 86	.2915E+03	.5917E+02	-.1189E+03	-.1034E+02	.2883E+04	-.7498E+03
LLoads 115	-.3102E+03	.2361E+02	.1162E+03	.1034E+02	.1232E+04	-.6988E+03
			BEAM NO. 8			
GLoads 134	.1889E+02	.8490E+01	-.5893E+01	.6771E+03	-.8177E+03	-.1208E-12

========== I M A G E S 3 D ==========
= Copyright (c) 1984 Celestial Software Inc. =
==========

SOLVE BEAM LOADS/STRESSES Version 2.0 07/01/90

L

Load Case 5:UBC SEISMIC LOAD - NS & WE

GLoads Node LLoads Node Stress Node Stress Node	Fx Axial Axial Maximum	Fy Y-Shear Y-Shear Minimum	Fz Z-Shear Z-Shear Cmb. Shear	Mx Torsion Torsion	My Y-Bending Y-Bending	Mz Z-Bending Z-Bending
GLoads 99	-.2651E+02	.1183E+02	.1351E+02	-.6771E+03	.1012E+04	-.3339E+02
LLoads 134	.1889E+02	-.8490E+01	.5893E+01	.6771E+03	.8177E+03	.1208E-12
LLoads 99	-.2651E+02	-.1183E+02	-.1351E+02	-.6771E+03	-.1012E+04	.3339E+02
			BEAM NO. 9			
GLoads 135	-.5455E+02	-.1341E+02	.7789E+01	.6541E+03	.5297E+03	.5613E+02
GLoads 114	.4693E+02	.3373E+02	-.1692E+00	-.6541E+03	-.4501E+03	.4152E+03
LLoads 135	.5455E+02	.1341E+02	.7789E+01	-.6541E+03	-.5297E+03	.5613E+02
LLoads 114	-.4693E+02	-.3373E+02	-.1692E+00	.6541E+03	.4501E+03	.4152E+03
			BEAM NO. 10			
GLoads 122	-.5418E+01	.9609E+02	.9506E+01	-.7412E+03	.5080E+03	.3947E+02
GLoads 124	-.2964E+01	-.7374E+02	-.1124E+01	.8581E+03	-.5080E+03	-.1246E+02
LLoads 122	.9609E+02	-.5418E+01	-.9506E+01	.5080E+03	-.7412E+03	-.3947E+02
LLoads 124	-.7374E+02	-.2964E+01	.1124E+01	-.5080E+03	.8581E+03	.1246E+02
			BEAM NO. 11			
GLoads 124	-.4374E+01	.1311E+03	.7213E+01	-.2004E+04	.4241E+03	.1246E+02
GLoads 126	-.4008E+01	-.1088E+03	.1169E+01	.2070E+04	-.4241E+03	-.8434E+01
LLoads 124	.1311E+03	-.4374E+01	-.7213E+01	.4241E+03	-.2004E+04	-.1246E+02
LLoads 126	-.1088E+03	-.4008E+01	-.1169E+01	-.4241E+03	.2070E+04	.8434E+01
			BEAM NO. 12			
GLoads 126	-.4246E+01	.1391E+03	.5188E+01	-.2549E+04	.2542E+03	.8434E+01
GLoads 128	-.4136E+01	-.1168E+03	.3194E+01	.2571E+04	-.2542E+03	-.7216E+01
LLoads 126	.1391E+03	-.4246E+01	-.5188E+01	.2542E+03	-.2549E+04	-.8434E+01
LLoads 128	-.1168E+03	-.4136E+01	-.3194E+01	-.2542E+03	.2571E+04	.7216E+01
			BEAM NO. 13			
GLoads 128	-.3604E+01	.1231E+03	.1974E+01	-.2361E+04	.1291E+03	.7216E+01
GLoads 130	-.4778E+01	-.1007E+03	.6408E+01	.2313E+04	-.1291E+03	-.2013E+02
LLoads 128	.1231E+03	-.3604E+01	-.1974E+01	.1291E+03	-.2361E+04	-.7216E+01
LLoads 130	-.1007E+03	-.4778E+01	-.6408E+01	-.1291E+03	.2313E+04	.2013E+02
			BEAM NO. 14			
GLoads 130	-.5970E+01	.8311E+02	.2962E+01	-.1298E+04	.1301E+02	.2013E+02
GLoads 132	-.4507E+01	-.5517E+02	.7515E+01	.1235E+04	-.1301E+02	-.8882E-13
LLoads 130	.8311E+02	-.5970E+01	-.2962E+01	.1301E+02	-.1298E+04	-.2013E+02
LLoads 132	-.5517E+02	-.4507E+01	-.7515E+01	-.1301E+02	.1235E+04	.8882E-13
			TRUSS NO. 15			
GLoads 132	.0000E+00	.3814E+01	.0000E+00	.0000E+00	.0000E+00	.0000E+00
GLoads 134	.0000E+00	-.3814E+01	.0000E+00	.0000E+00	.0000E+00	.0000E+00
LLoads 132	.3814E+01	.0000E+00	.0000E+00	.0000E+00	.0000E+00	.0000E+00
LLoads 134	-.3814E+01	.0000E+00	.0000E+00	.0000E+00	.0000E+00	.0000E+00
			BEAM NO. 16			
GLoads 123	-.9369E+01	.2825E+03	.8650E+01	-.8791E+03	.3842E+03	.9910E+02

========== I M A G E S 3 D ==========
= Copyright (c) 1984 Celestial Software Inc. =
==========

SOLVE BEAM LOADS/STRESSES Version 2.0 07/01/90

L

Load Case 5:UBC SEISMIC LOAD - NS & WE

GLoads Node LLoads Node Stress Node Stress Node	Fx Axial Axial Maximum	Fy Y-Shear Y-Shear Minimum	Fz Z-Shear Z-Shear Cmb. Shear	Mx Torsion Torsion	My Y-Bending Y-Bending	Mz Z-Bending Z-Bending
GLoads 125	.9875E+00	-.2602E+03	-.2681E+00	.9772E+03	-.3842E+03	.1482E+02
LLoads 123	.2825E+03	.9369E+01	.8650E+01	.3842E+03	.8791E+03	.9910E+02
LLoads 125	-.2602E+03	-.9875E+00	-.2681E+00	-.3842E+03	-.9772E+03	.1482E+02
			BEAM NO. 17			
GLoads 2	-.6387E+01	.1221E+03	.6190E+01	-.6869E+03	.6688E+03	.5257E+02
GLoads 19	-.1995E+01	-.9970E+02	.2192E+01	.7309E+03	-.6688E+03	-.4259E+01
LLoads 2	.1221E+03	-.6387E+01	-.6190E+01	.6688E+03	-.6869E+03	-.5257E+02
LLoads 19	-.9970E+02	-.1995E+01	-.2192E+01	-.6688E+03	.7309E+03	.4259E+01
			BEAM NO. 18			
GLoads 19	-.3918E+01	.1166E+03	.5293E+01	-.1780E+04	.5192E+03	.4259E+01
GLoads 35	-.4464E+01	-.9422E+02	.3089E+01	.1804E+04	-.5192E+03	-.1026E+02
LLoads 19	.1166E+03	-.3918E+01	-.5293E+01	.5192E+03	-.1780E+04	-.4259E+01
LLoads 35	-.9422E+02	-.4464E+01	-.3089E+01	-.5192E+03	.1804E+04	.1026E+02
			BEAM NO. 19			
GLoads 35	-.4384E+01	.1061E+03	.3821E+01	-.2168E+04	.2545E+03	.1026E+02
GLoads 51	-.3997E+01	-.8379E+02	.4561E+01	.2160E+04	-.2545E+03	-.6001E+01
LLoads 35	.1061E+03	-.4384E+01	-.3821E+01	.2545E+03	-.2168E+04	-.1026E+02
LLoads 51	-.8379E+02	-.3997E+01	-.4561E+01	-.2545E+03	.2160E+04	.6001E+01
			BEAM NO. 20			
GLoads 51	-.3617E+01	.8953E+02	.4235E+01	-.2046E+04	-.1015E+03	.6001E+01
GLoads 67	-.4765E+01	-.6718E+02	.4147E+01	.2047E+04	.1015E+03	-.1864E+02
LLoads 51	.8953E+02	-.3617E+01	-.4235E+01	-.1015E+03	-.2046E+04	-.6001E+01
LLoads 67	-.6718E+02	-.4765E+01	-.4147E+01	.1015E+03	.2047E+04	.1864E+02
			BEAM NO. 21			
GLoads 67	-.5445E+01	.7613E+02	.3158E+01	-.1058E+04	-.3707E+03	.1864E+02
GLoads 83	-.5033E+01	-.4819E+02	.7319E+01	.1000E+04	.3707E+03	-.1297E+02
LLoads 67	.7613E+02	-.5445E+01	-.3158E+01	-.3707E+03	-.1058E+04	-.1864E+02
LLoads 83	-.4819E+02	-.5033E+01	-.7319E+01	.3707E+03	.1000E+04	.1297E+02
			BEAM NO. 22			
GLoads 83	-.2154E+01	.7556E+02	-.5502E+01	.8943E+03	-.5279E+03	.1297E+02
GLoads 99	-.4133E+01	-.5880E+02	.1179E+02	-.1037E+04	.5279E+03	-.2930E+02
LLoads 83	.7556E+02	-.2154E+01	.5502E+01	-.5279E+03	.8943E+03	-.1297E+02
LLoads 99	-.5880E+02	-.4133E+01	-.1179E+02	.5279E+03	-.1037E+04	.2930E+02
			BEAM NO. 23			
GLoads 5	-.3672E+01	.7823E+02	.3224E+01	.4805E+02	.1679E+04	.4884E+02
GLoads 22	-.4710E+01	-.5588E+02	.5158E+01	-.6932E+02	-.1679E+04	-.6027E+02
LLoads 5	.7823E+02	.3672E+01	.3224E+01	.1679E+04	-.4805E+02	.4884E+02
LLoads 22	-.5588E+02	.4710E+01	.5158E+01	-.1679E+04	.6932E+02	-.6027E+02
			BEAM NO. 24			
GLoads 22	-.1759E+01	.6643E+02	.1687E+01	-.4299E+02	.1086E+04	-.6089E+02

========== I M A G E S 3 D ==========
= Copyright (c) 1984 Celestial Software Inc. =
==========

SOLVE BEAM LOADS/STRESSES Version 2.0 07/01/90

L

Load Case 5:UBC SEISMIC LOAD - NS & WE

GLoads Node LLoads Node Stress Node Stress Node	Fx Axial Axial Maximum	Fy Y-Shear Y-Shear Minimum	Fz Z-Shear Z-Shear Cmb. Shear	Mx Torsion Torsion	My Y-Bending Y-Bending	Mz Z-Bending Z-Bending
GLoads 38	-.6623E+01	-.4407E+02	.6695E+01	-.1209E+02	-.1086E+04	.7377E+01
LLoads 22	.6643E+02	.1759E+01	.1687E+01	.1086E+04	.4299E+02	-.6089E+02
LLoads 38	-.4407E+02	.6623E+01	.6695E+01	-.1086E+04	.1209E+02	.7377E+01
			BEAM NO. 25			
GLoads 38	-.4093E+01	.6341E+02	.4241E+01	.2846E+02	.3405E+03	.3728E+02
GLoads 54	-.4288E+01	-.4106E+02	.4141E+01	-.2736E+02	-.3405E+03	-.3942E+02
LLoads 38	.6341E+02	.4093E+01	.4241E+01	.3405E+03	-.2846E+02	.3728E+02
LLoads 54	-.4106E+02	.4288E+01	.4141E+01	-.3405E+03	.2736E+02	-.3942E+02
			BEAM NO. 26			
GLoads 54	-.5105E+01	.5604E+02	.4897E+01	-.2909E+01	-.5741E+03	-.1774E+02
GLoads 70	-.3276E+01	-.3369E+02	.3485E+01	.1844E+02	.5741E+03	.3786E+02
LLoads 54	.5604E+02	.5105E+01	.4897E+01	-.5741E+03	.2909E+01	-.1774E+02
LLoads 70	-.3369E+02	.3276E+01	.3485E+01	.5741E+03	-.1844E+02	.3786E+02
			BEAM NO. 27			
GLoads 70	-.5719E+01	.6756E+02	.6493E+01	.4714E+02	-.1383E+04	.5002E+02
GLoads 86	-.4758E+01	-.3962E+02	.3984E+01	-.1264E+02	.1383E+04	-.3681E+02
LLoads 70	.6756E+02	.5719E+01	.6493E+01	-.1383E+04	-.4714E+02	.5002E+02
LLoads 86	-.3962E+02	.4758E+01	.3984E+01	.1383E+04	.1264E+02	-.3681E+02
			BEAM NO. 28			
GLoads 86	.4329E+01	.5255E+02	-.1999E+01	-.5807E+02	-.4484E+03	-.2199E+02
GLoads 102	-.1062E+02	-.3578E+02	.8285E+01	-.2677E+02	.4484E+03	-.1013E+03
LLoads 86	.5255E+02	-.4329E+01	-.1999E+01	-.4484E+03	.5807E+02	-.2199E+02
LLoads 102	-.3578E+02	.1062E+02	.8285E+01	.4484E+03	.2677E+02	-.1013E+03
			BEAM NO. 29			
GLoads 11	-.6232E+01	.2559E+03	.8591E+01	.1456E+03	-.3973E+04	.1519E+03
GLoads 28	-.6819E+01	-.2211E+03	.4460E+01	-.1001E+03	.3973E+04	-.1583E+03
LLoads 11	.2559E+03	.8591E+01	-.6232E+01	-.3973E+04	.1519E+03	.1456E+03
LLoads 28	-.2211E+03	.4460E+01	-.6819E+01	.3973E+04	-.1583E+03	-.1001E+03
			BEAM NO. 30			
GLoads 28	-.2091E+01	.1744E+03	.1349E+01	-.1155E+03	-.2756E+04	-.6615E+02
GLoads 44	-.1096E+02	-.1395E+03	.1170E+02	.1665E+01	.2756E+04	-.3142E+02
LLoads 28	.1744E+03	.1349E+01	-.2091E+01	-.2756E+04	-.6615E+02	-.1155E+03
LLoads 44	-.1395E+03	.1170E+02	-.1096E+02	.2756E+04	-.3142E+02	.1665E+01
			BEAM NO. 31			
GLoads 44	-.5738E+01	.1382E+03	.7436E+01	.5412E+02	-.1093E+04	.1092E+02
GLoads 60	-.7314E+01	-.1034E+03	.5615E+01	-.3408E+02	.1093E+04	-.2825E+02
LLoads 44	.1382E+03	.7436E+01	-.5738E+01	-.1093E+04	.1092E+02	.5412E+02
LLoads 60	-.1034E+03	.5615E+01	-.7314E+01	.1093E+04	-.2825E+02	-.3408E+02
			BEAM NO. 32			
GLoads 60	-.7856E+01	.1082E+03	.6228E+01	-.5194E+01	.6936E+03	-.3807E+01

========== I M A G E S 3 D ==========
= Copyright (c) 1984 Celestial Software Inc. =
==========

SOLVE BEAM LOADS/STRESSES Version 2.0 07/01/90

L

Load Case 5:UBC SEISMIC LOAD - NS & WE

GLoads Node LLoads Node Stress Node Stress Node	Fx Axial Axial Maximum	Fy Y-Shear Y-Shear Minimum	Fz Z-Shear Z-Shear Cmb. Shear	Mx Torsion Torsion	My Y-Bending Y-Bending	Mz Z-Bending Z-Bending
GLoads 76	-.5195E+01	-.7344E+02	.6824E+01	-.1364E+01	-.6936E+03	.3309E+02
LLoads 60	.1082E+03	.6228E+01	-.7856E+01	.6936E+03	-.3807E+01	-.5194E+01
LLoads 76	-.7344E+02	.6824E+01	-.5195E+01	-.6936E+03	.3309E+02	-.1364E+01
			BEAM NO. 33			
GLoads 76	-.8558E+01	.9560E+02	.9713E+01	.5949E+02	.2168E+04	.8205E+02
GLoads 92	-.7756E+01	-.5209E+02	.6601E+01	-.1669E+02	-.2168E+04	-.7104E+02
LLoads 76	.9560E+02	.9713E+01	-.8558E+01	.2168E+04	.8205E+02	.5949E+02
LLoads 92	-.5209E+02	.6601E+01	-.7756E+01	-.2168E+04	-.7104E+02	-.1669E+02
			BEAM NO. 34			
GLoads 92	-.1108E+02	.5365E+02	.1910E+02	.1621E+03	.1016E+04	-.5704E+02
GLoads 108	.1296E+01	-.2755E+02	-.9309E+01	.7230E+02	-.1016E+04	.1592E+03
LLoads 92	.5365E+02	.1910E+02	-.1108E+02	.1016E+04	-.5704E+02	.1621E+03
LLoads 108	-.2755E+02	-.9309E+01	.1296E+01	-.1016E+04	.1592E+03	.7230E+02
			BEAM NO. 35			
GLoads 17	-.7553E+01	.1889E+03	.7788E+01	-.1049E+04	.6664E+03	.7638E+02
GLoads 34	-.8283E+00	-.1666E+03	.5935E+00	.1128E+04	-.6664E+03	-.2406E+01
LLoads 17	.1889E+03	.7553E+01	.7788E+01	.6664E+03	.1049E+04	.7638E+02
LLoads 34	-.1666E+03	.8283E+00	.5935E+00	-.6664E+03	-.1128E+04	-.2406E+01
			BEAM NO. 36			
GLoads 34	-.3923E+01	.1773E+03	.5611E+01	-.2628E+04	.4500E+03	.2406E+01
GLoads 50	-.4459E+01	-.1550E+03	.2770E+01	.2659E+04	-.4500E+03	-.8301E+01
LLoads 34	.1773E+03	.3923E+01	.5611E+01	.4500E+03	.2628E+04	.2406E+01
LLoads 50	-.1550E+03	.4459E+01	.2770E+01	-.4500E+03	-.2659E+04	-.8301E+01
			BEAM NO. 37			
GLoads 50	-.3542E+01	.1366E+03	.4020E+01	-.2996E+04	.1651E+03	.8301E+01
GLoads 66	-.4840E+01	-.1143E+03	.4362E+01	.2992E+04	-.1651E+03	-.2258E+02
LLoads 50	.1366E+03	.3542E+01	.4020E+01	.1651E+03	.2996E+04	.8301E+01
LLoads 66	-.1143E+03	.4840E+01	.4362E+01	-.1651E+03	-.2992E+04	-.2258E+02
			BEAM NO. 38			
GLoads 66	-.7047E+01	.9944E+02	.2899E+01	-.2321E+04	-.2958E+03	.2258E+02
GLoads 82	-.1335E+01	-.7709E+02	.5483E+01	.2293E+04	.2958E+03	.4025E+02
LLoads 66	.9944E+02	.7047E+01	.2899E+01	-.2958E+03	.2321E+04	.2258E+02
LLoads 82	-.7709E+02	.1335E+01	.5483E+01	.2958E+03	-.2293E+04	.4025E+02
			BEAM NO. 39			
GLoads 82	.4275E+01	.6996E+02	-.3426E+01	.1398E+04	-.3387E+03	-.4025E+02
GLoads 98	-.1475E+02	-.4202E+02	.1390E+02	-.1636E+04	.3387E+03	-.2214E+03
LLoads 82	.6996E+02	-.4275E+01	-.3426E+01	-.3387E+03	.1398E+04	-.4025E+02
LLoads 98	-.4202E+02	.1475E+02	.1390E+02	.3387E+03	.1636E+04	-.2214E+03
			BEAM NO. 40			
GLoads 98	-.3048E+02	.4926E+02	.3052E+02	.1785E+04	.2985E+03	-.8759E+01

========== I M A G E S 3 D ==========
= Copyright (c) 1984 Celestial Software Inc. =
==========

SOLVE BEAM LOADS/STRESSES Version 2.0 07/01/90

L

Load Case 5:UBC SEISMIC LOAD - NS & WE

GLoads Node LLoads Node Stress Node Stress Node	Fx Axial Axial Maximum	Fy Y-Shear Y-Shear Minimum	Fz Z-Shear Z-Shear Cmb. Shear	Mx Torsion Torsion	My Y-Bending Y-Bending	Mz Z-Bending Z-Bending
GLoads 114	.2419E+02	-.3250E+02	-.2423E+02	-.1333E+04	-.2985E+03	.4598E+03
LLoads 98	.4926E+02	.3048E+02	.3052E+02	.2985E+03	-.1785E+04	-.8759E+01
LLoads 114	-.3250E+02	-.2419E+02	-.2423E+02	-.2985E+03	.1333E+04	.4598E+03
			BEAM NO. 41			
GLoads 99	-.6684E+01	.1541E+01	.2849E+02	.7591E+03	-.1601E+04	-.3775E+02
GLoads 100	.1477E+01	.1234E+02	-.2328E+02	-.7591E+03	.1247E+04	-.3606E+02
LLoads 99	-.6684E+01	-.1541E+01	-.2849E+02	.7591E+03	.1601E+04	.3775E+02
LLoads 100	.1477E+01	-.1234E+02	.2328E+02	-.7591E+03	-.1247E+04	.3606E+02
			BEAM NO. 42			
GLoads 100	-.4519E+01	.8244E+01	.1835E+02	.1166E+04	-.6460E+02	.3606E+02
GLoads 101	-.6883E+00	.5641E+01	-.1314E+02	-.1166E+04	-.1506E+03	-.1828E+02
LLoads 100	-.4519E+01	-.8244E+01	-.1835E+02	.1166E+04	.6460E+02	-.3606E+02
LLoads 101	-.6883E+00	-.5641E+01	.1314E+02	-.1166E+04	.1506E+03	.1828E+02
			BEAM NO. 43			
GLoads 101	-.3361E+01	.1049E+01	.2462E+02	.9390E+03	.1172E+04	.1828E+02
GLoads 102	-.1846E+01	.1284E+02	-.1941E+02	-.9390E+03	-.1473E+04	-.9882E+02
LLoads 101	-.3361E+01	-.1049E+01	-.2462E+02	.9390E+03	-.1172E+04	-.1828E+02
LLoads 102	-.1846E+01	-.1284E+02	.1941E+02	-.9390E+03	.1473E+04	.9882E+02
			BEAM NO. 44			
GLoads 102	-.1689E+02	.9275E+01	.1118E+03	.5044E+02	.1503E+04	-.5626E+03
GLoads 103	.1099E+02	.6473E+01	-.1059E+03	-.2872E+02	-.1287E+04	.5626E+03
LLoads 102	-.1118E+03	-.9275E+01	.1689E+02	.5626E+03	-.1503E+04	-.5044E+02
LLoads 103	.1059E+03	-.6473E+01	-.1099E+02	-.5626E+03	.1287E+04	.2872E+02
			BEAM NO. 45			
GLoads 103	-.1938E+02	.8438E+01	.7537E+02	.2872E+02	-.1980E+03	-.5735E+03
GLoads 104	.1347E+02	.7310E+01	-.6946E+02	-.1998E+02	.4526E+03	.5735E+03
LLoads 103	-.7537E+02	-.8438E+01	.1938E+02	.5735E+03	.1980E+03	-.2872E+02
LLoads 104	.6946E+02	-.7310E+01	-.1347E+02	-.5735E+03	-.4526E+03	.1998E+02
			BEAM NO. 46			
GLoads 104	-.9117E+01	.7912E+01	.5994E+02	.1998E+02	-.1522E+04	-.1126E+03
GLoads 105	.3212E+01	.7836E+01	-.5403E+02	-.1940E+02	.1618E+04	.1126E+03
LLoads 104	-.5994E+02	-.7912E+01	.9117E+01	.1126E+03	.1522E+04	-.1998E+02
LLoads 105	.5403E+02	-.7836E+01	-.3212E+01	-.1126E+03	-.1618E+04	.1940E+02
			BEAM NO. 47			
GLoads 105	-.3150E+01	.7847E+01	.6303E+02	.1940E+02	-.1882E+04	.1861E+03
GLoads 106	-.2755E+01	.7900E+01	-.5712E+02	-.1981E+02	.1885E+04	-.1861E+03
LLoads 105	-.6303E+02	-.7847E+01	.3150E+01	-.1861E+03	.1882E+04	-.1940E+02
LLoads 106	.5712E+02	-.7900E+01	.2755E+01	.1861E+03	-.1885E+04	.1981E+02
			BEAM NO. 48			
GLoads 106	.5795E+01	.7514E+01	.8817E+02	.1981E+02	-.1411E+04	.5422E+03

========== I M A G E S 3 D ==========
= Copyright (c) 1984 Celestial Software Inc. =
==========

SOLVE BEAM LOADS/STRESSES Version 2.0 07/01/90

L

Load Case 5:UBC SEISMIC LOAD - NS & WE

GLoads Node LLoads Node Stress Node Stress Node	Fx Axial Axial Maximum	Fy Y-Shear Y-Shear Minimum	Fz Z-Shear Z-Shear Cmb. Shear	Mx Torsion Torsion	My Y-Bending Y-Bending	Mz Z-Bending Z-Bending
GLoads 107	-.1170E+02	.8233E+01	-.8226E+02	-.2538E+02	.1275E+04	-.5422E+03
LLoads 106	-.8817E+02	-.7514E+01	-.5795E+01	-.5422E+03	.1411E+04	-.1981E+02
LLoads 107	.8226E+02	-.8233E+01	.1170E+02	.5422E+03	-.1275E+04	.2538E+02
			BEAM NO. 49			
GLoads 107	.5344E+01	.6001E+01	.1492E+03	.2538E+02	-.3853E+03	.5056E+03
GLoads 108	-.1125E+02	.9747E+01	-.1433E+03	-.5441E+02	.2567E+03	-.5056E+03
LLoads 107	-.1492E+03	-.6001E+01	-.5344E+01	-.5056E+03	.3853E+03	-.2538E+02
LLoads 108	.1433E+03	-.9747E+01	.1125E+02	.5056E+03	-.2567E+03	.5441E+02
			BEAM NO. 50			
GLoads 108	.6263E+02	.7533E+01	.9515E+01	-.6020E+03	.3881E+03	.2031E+02
GLoads 109	-.6841E+02	.7876E+01	.3736E+01	.6020E+03	-.4886E+03	-.2291E+02
LLoads 108	.6263E+02	-.7533E+01	-.9515E+01	-.6020E+03	-.3881E+03	-.2031E+02
LLoads 109	-.6841E+02	-.7876E+01	.3736E+01	.6020E+03	.4886E+03	.2291E+02
			BEAM NO. 51			
GLoads 109	.3224E+02	.7939E+01	.1124E+02	-.6892E+03	.1277E+04	.2291E+02
GLoads 110	-.3802E+02	.7470E+01	-.5463E+01	.6892E+03	-.1404E+04	-.1935E+02
LLoads 109	.3224E+02	-.7939E+01	-.1124E+02	-.6892E+03	-.1277E+04	-.2291E+02
LLoads 110	-.3802E+02	-.7470E+01	.5463E+01	.6892E+03	.1404E+04	.1935E+02
			BEAM NO. 52			
GLoads 110	.1656E+02	.7541E+01	.2401E+01	-.3374E+03	.1867E+04	.1935E+02
GLoads 111	-.2233E+02	.7868E+01	.3377E+01	.3374E+03	-.1859E+04	-.2183E+02
LLoads 110	.1656E+02	-.7541E+01	-.2401E+01	-.3374E+03	-.1867E+04	-.1935E+02
LLoads 111	-.2233E+02	-.7868E+01	-.3377E+01	.3374E+03	.1859E+04	.2183E+02
			BEAM NO. 53			
GLoads 111	.5056E+01	.8451E+01	-.2981E+01	-.2841E+02	.1649E+04	.2183E+02
GLoads 112	-.1083E+02	.6958E+01	.8759E+01	.2841E+02	-.1560E+04	-.1051E+02
LLoads 111	.5056E+01	-.8451E+01	.2981E+01	-.2841E+02	-.1649E+04	-.2183E+02
LLoads 112	-.1083E+02	-.6958E+01	-.8759E+01	.2841E+02	.1560E+04	.1051E+02
			BEAM NO. 54			
GLoads 112	-.1235E+02	.1325E+01	-.1334E+02	.4913E+03	.5869E+03	.1051E+02
GLoads 113	.6575E+01	.1408E+02	.1912E+02	-.4913E+03	-.3408E+03	-.1073E+03
LLoads 112	-.1235E+02	-.1325E+01	.1334E+02	.4913E+03	-.5869E+03	-.1051E+02
LLoads 113	.6575E+01	-.1408E+02	-.1912E+02	-.4913E+03	.3408E+03	.1073E+03
			BEAM NO. 55			
GLoads 113	-.5816E+02	.4559E+02	-.4485E+01	.3526E+03	-.7627E+03	.1073E+03
GLoads 114	.5238E+02	-.3019E+02	.1026E+02	-.3526E+03	.8745E+03	.4674E+03
LLoads 113	-.5816E+02	-.4559E+02	.4485E+01	.3526E+03	.7627E+03	-.1073E+03
LLoads 114	.5238E+02	.3019E+02	-.1026E+02	-.3526E+03	-.8745E+03	-.4674E+03
			BEAM NO. 56			
GLoads 115	-.6426E+04	.1600E+05	.6426E+04	-.1371E+06	.9438E+01	-.1371E+06

========== I M A G E S 3 D ==========
= Copyright (c) 1984 Celestial Software Inc. =
==========

SOLVE BEAM LOADS/STRESSES Version 2.0 07/01/90

L

Load Case 5:UBC SEISMIC LOAD - NS & WE

GLoads Node LLoads Node Stress Node Stress Node	Fx Axial Axial Maximum	Fy Y-Shear Y-Shear Minimum	Fz Z-Shear Z-Shear Cmb. Shear	Mx Torsion Torsion	My Y-Bending Y-Bending	Mz Z-Bending Z-Bending
GLoads 120	.6228E+04	-.1547E+05	-.6228E+04	-.1982E+06	-.9438E+01	-.1982E+06
LLoads 115	-.1600E+05	-.3660E+04	-.8318E+04	-.9438E+01	.1775E+06	-.7813E+05
LLoads 120	.1547E+05	.3548E+04	.8062E+04	.9438E+01	.2566E+06	-.1129E+06
			BEAM NO. 57			
GLoads 120	.5022E+04	-.1453E+05	-.5022E+04	.1982E+06	.9438E+01	.1982E+06
GLoads 121	-.5256E+04	.1515E+05	.5255E+04	.1230E+06	-.9438E+01	.1230E+06
LLoads 120	.1453E+05	.2860E+04	.6501E+04	-.9438E+01	-.2566E+06	.1129E+06
LLoads 121	-.1515E+05	-.2993E+04	-.6803E+04	.9438E+01	-.1592E+06	.7003E+05
			BEAM NO. 58			
GLoads 116	-.2349E+04	.2745E+04	.4352E+03	.1882E+05	.2278E+03	.2379E+05
GLoads 121	.2271E+04	-.2536E+04	-.3567E+03	-.1882E+05	-.8542E+04	.3166E+05
LLoads 116	-.2349E+04	.2745E+04	.4352E+03	.1882E+05	.2278E+03	.2379E+05
LLoads 121	.2271E+04	-.2536E+04	-.3567E+03	-.1882E+05	-.8542E+04	.3166E+05
			BEAM NO. 59			
GLoads 117	-.4352E+03	.5247E+04	.2349E+04	.8981E+04	.2317E+03	.1882E+05
GLoads 121	.3567E+03	-.5038E+04	-.2270E+04	-.1170E+06	-.8547E+04	-.1882E+05
LLoads 117	.2349E+04	.5247E+04	.4352E+03	.1882E+05	.2317E+03	-.8981E+04
LLoads 121	-.2270E+04	-.5038E+04	-.3567E+03	-.1882E+05	-.8547E+04	.1170E+06
			BEAM NO. 60			
GLoads 118	-.2349E+04	.5247E+04	.4362E+03	.1881E+05	-.2115E+03	.8978E+04
GLoads 121	.2271E+04	-.5038E+04	-.3577E+03	-.1881E+05	.8547E+04	-.1170E+06
LLoads 118	.2349E+04	.5247E+04	-.4362E+03	-.1881E+05	-.2115E+03	-.8978E+04
LLoads 121	-.2271E+04	-.5038E+04	.3577E+03	.1881E+05	.8547E+04	.1170E+06
			BEAM NO. 61			
GLoads 119	-.4362E+03	.2745E+04	.2349E+04	.2379E+05	-.2154E+03	.1881E+05
GLoads 121	.3577E+03	-.2536E+04	-.2270E+04	.3166E+05	.8551E+04	-.1881E+05
LLoads 119	-.2349E+04	.2745E+04	-.4362E+03	-.1881E+05	-.2154E+03	.2379E+05
LLoads 121	.2270E+04	-.2536E+04	.3577E+03	.1881E+05	.8551E+04	.3166E+05
			BEAM NO. 62			
GLoads 125	-.2706E+01	.1719E+03	.6289E+01	-.2271E+04	.2562E+03	-.1482E+02
GLoads 127	-.5676E+01	-.1495E+03	.2092E+01	.2317E+04	-.2562E+03	-.1784E+02
LLoads 125	.1719E+03	.2706E+01	.6289E+01	.2562E+03	.2271E+04	-.1482E+02
LLoads 127	-.1495E+03	.5676E+01	.2092E+01	-.2562E+03	-.2317E+04	-.1784E+02
			BEAM NO. 63			
GLoads 127	-.4827E+01	.1147E+03	.2810E+01	-.2553E+04	-.3265E+01	.1784E+02
GLoads 129	-.3554E+01	-.9234E+02	.5571E+01	.2522E+04	.3265E+01	-.3841E+01
LLoads 127	.1147E+03	.4827E+01	.2810E+01	-.3265E+01	.2553E+04	.1784E+02
LLoads 129	-.9234E+02	.3554E+01	.5571E+01	.3265E+01	-.2522E+04	-.3841E+01
			BEAM NO. 64			
GLoads 129	-.3318E+01	.7754E+02	-.1833E+01	-.1427E+04	-.4708E+03	.3841E+01

========== I M A G E S 3 D ==========
= Copyright (c) 1984 Celestial Software Inc. =
==========

SOLVE BEAM LOADS/STRESSES Version 2.0 07/01/90

L

Load Case 5:UBC SEISMIC LOAD - NS & WE

GLoads Node LLoads Node Stress Node Stress Node	Fx Axial Axial Maximum	Fy Y-Shear Y-Shear Minimum	Fz Z-Shear Z-Shear Cmb. Shear	Mx Torsion Torsion	My Y-Bending Y-Bending	Mz Z-Bending Z-Bending
GLoads 131	-.5064E+01	-.5519E+02	.1021E+02	.1294E+04	.4708E+03	-.2305E+02
LLoads 129	.7754E+02	.3318E+01	-.1833E+01	-.4708E+03	.1427E+04	.3841E+01
LLoads 131	-.5519E+02	.5064E+01	.1021E+02	.4708E+03	-.1294E+04	-.2305E+02
			BEAM NO. 65			
GLoads 131	-.5427E+01	.8227E+02	.6384E+01	.3521E+03	-.1303E+03	.2305E+02
GLoads 133	-.5051E+01	-.5433E+02	.4093E+01	-.3206E+03	.1303E+03	-.1787E+02
LLoads 131	.8227E+02	.5427E+01	.6384E+01	-.1303E+03	-.3521E+03	.2305E+02
LLoads 133	-.5433E+02	.5051E+01	.4093E+01	.1303E+03	.3206E+03	-.1787E+02
			BEAM NO. 66			
GLoads 133	-.8243E+00	.3437E+02	-.5781E+01	.7598E+03	.6870E+03	.1787E+02
GLoads 135	-.5462E+01	-.1760E+02	.1207E+02	-.9071E+03	-.6870E+03	-.5613E+02
LLoads 133	.3437E+02	.8243E+00	-.5781E+01	.6870E+03	-.7598E+03	.1787E+02
LLoads 135	-.1760E+02	.5462E+01	.1207E+02	-.6870E+03	.9071E+03	-.5613E+02
			BEAM NO. 67			
GLoads 115	-.9648E+03	-.4049E+04	.9382E+02	.3331E+05	-.2407E+04	.3499E+05
GLoads 116	.5263E+03	.5219E+04	.3447E+03	-.1882E+05	-.2278E+03	-.2379E+05
LLoads 115	.4157E+04	-.2249E+03	.9382E+02	-.3591E+04	.3320E+05	.3499E+05
LLoads 116	-.5229E+04	-.4157E+03	.3447E+03	.3591E+04	-.1848E+05	-.2379E+05
			BEAM NO. 68			
GLoads 115	-.9327E+02	-.3994E+04	-.8275E+03	.3372E+05	-.2414E+04	.3337E+05
GLoads 117	-.3453E+03	.5164E+04	.1266E+04	-.8981E+04	-.2317E+03	-.1882E+05
LLoads 115	.4078E+04	-.9963E+02	.9327E+02	-.3595E+04	.3327E+05	-.3372E+05
LLoads 117	-.5307E+04	.3219E+03	.3453E+03	.3595E+04	-.1848E+05	.8981E+04
			BEAM NO. 69			
GLoads 115	.8281E+03	-.3994E+04	.9365E+02	.3332E+05	.2426E+04	.3379E+05
GLoads 118	-.1267E+04	.5164E+04	.3449E+03	-.1881E+05	.2115E+03	-.8978E+04
LLoads 115	.4078E+04	-.1002E+03	-.9365E+02	.3574E+04	-.3322E+05	-.3379E+05
LLoads 118	-.5307E+04	.3225E+03	-.3449E+03	-.3574E+04	.1847E+05	.8978E+04
			BEAM NO. 70			
GLoads 115	-.9311E+02	-.4049E+04	.9654E+03	.3493E+05	.2434E+04	.3338E+05
GLoads 119	-.3454E+03	.5219E+04	-.5268E+03	-.2379E+05	.2154E+03	-.1881E+05
LLoads 115	.4157E+04	-.2255E+03	-.9311E+02	.3577E+04	-.3328E+05	.3493E+05
LLoads 119	-.5229E+04	-.4152E+03	-.3454E+03	-.3577E+04	.1847E+05	-.2379E+05

KAISER ENGINEERS HANFORD S/N:801854 02/22/95
PAGE 165 Run ID=MN61973 08:51:11

```
============== I M A G E S  3 D ==============
= Copyright (c) 1984   Celestial Software Inc. =
===============================================
```

SOLVE BEAM LOADS/STRESSES Version 2.0 07/01/90

L

Load Case 5:UBC SEISMIC LOAD - NS & WE

MAXIMUM STRESS SUMMARY FOR BEAMS/TRUSSES
WITHIN SPECIFIED RANGE 1- 70

Maximum (absolute) Stress = .1380E+04 at BEAM 56

Beam	Axial	Y-Shear	Z-Shear	Torsion	Y-Bending	Z-Bending
56	.4396E+03	-.2016E+03	-.4580E+03	.5364E-03	.6533E+03	-.2874E+03

Maximum	Minimum	Cmb. Shear
.1380E+04	-.5011E+03	.6902E+03

KAISER ENGINEERS HANFORD S/N:801854 02/22/95
PAGE 166 Run ID=MN61973 08:51:11

```
============== I M A G E S  3 D ==============
= Copyright (c) 1984   Celestial Software Inc. =
===============================================
```

SOLVE PLATE LOADS/STRESSES Version 2.0 07/01/90

L

Load Case 5:UBC SEISMIC LOAD - NS & WE

PLATE LOADS AND/OR STRESSES

GLoads	Node	Fx	Fy	Fz	Mx	My	Mz
				PLATE 1			
GLoads	2	-.3233E+02	.5685E+02	.1916E+02	.1843E+02	.1673E+03	.0000E+00
GLoads	3	-.1616E+03	.3623E+03	.1388E+02	.1968E+03	.5553E+01	.0000E+00
GLoads	20	.6889E+02	-.5011E+02	-.1130E+02	.3489E+03	-.2138E+03	.0000E+00
GLoads	19	.1251E+03	-.3691E+03	-.2173E+02	.1626E+03	.7618E+02	.0000E+00
				PLATE 2			
GLoads	3	-.6176E+02	.1558E+01	.4767E+01	-.1968E+03	.2060E+03	.0000E+00
GLoads	4	-.1696E+03	.3641E+03	.9033E+01	.2393E+03	.6915E+02	.0000E+00
GLoads	21	.9613E+02	.8331E+01	-.3512E+01	.3213E+03	-.2280E+03	.0000E+00
GLoads	20	.1352E+03	-.3740E+03	-.1029E+02	-.6021E+02	.2838E+02	.0000E+00
				PLATE 3			
GLoads	4	-.9410E+02	-.5863E+02	-.8959E+01	-.2393E+03	.2148E+03	.0000E+00
GLoads	5	-.1700E+03	.3553E+03	.3674E+01	.1669E+03	.2103E+03	.0000E+00
GLoads	22	.1278E+03	.6980E+02	.2570E+02	.1674E+03	-.1239E+02	.0000E+00
GLoads	21	.1363E+03	-.3665E+03	-.2041E+02	-.2112E+03	-.1126E+02	.0000E+00
				PLATE 4			
GLoads	5	-.7560E+01	-.4279E+02	.9027E+02	.0000E+00	.2451E+03	.2015E+03
GLoads	6	.8304E+01	.3918E+03	.2069E+03	.0000E+00	.2502E+03	-.2359E+03
GLoads	23	.2308E+02	.3004E+02	-.1062E+03	.1896E+03	-.6555E+01	.0000E+00
GLoads	22	-.2382E+02	-.3791E+03	-.1910E+03	.0000E+00	-.2385E+01	.2076E+03
				PLATE 5			
GLoads	6	-.1329E+02	-.2605E+02	.8995E+02	.0000E+00	.6492E+02	.2359E+03
GLoads	7	-.1071E+02	.4417E+03	.2343E+03	.0000E+00	.2433E+03	-.1320E+03
GLoads	24	.1937E+02	.1851E+02	-.1063E+03	-.5726E+02	.8524E+02	.0000E+00
GLoads	23	.4633E+01	-.4342E+03	-.2180E+03	-.3669E+03	-.2592E+03	.0000E+00
				PLATE 6			
GLoads	7	-.1855E+02	-.2103E+02	.9396E+02	.0000E+00	-.5762E+02	.1320E+03
GLoads	8	-.1349E+02	.4774E+03	.2537E+03	.0000E+00	.1827E+03	.6219E+01
GLoads	25	.2031E+02	.1600E+02	-.1113E+03	-.2130E+03	.2229E+03	.0000E+00
GLoads	24	.1173E+02	-.4724E+03	-.2364E+03	-.3537E+03	-.2424E+03	.0000E+00
				PLATE 7			
GLoads	8	-.1306E+02	-.2113E+02	.1018E+03	.0000E+00	-.1922E+03	-.6219E+01
GLoads	9	-.1874E+02	.5083E+03	.2676E+03	.0000E+00	.4321E+02	.1477E+03
GLoads	26	.1088E+02	.1607E+02	-.1227E+03	-.3608E+03	.2419E+03	.0000E+00
GLoads	25	.2093E+02	-.5032E+03	-.2468E+03	-.1975E+03	-.2148E+03	.0000E+00
				PLATE 8			
GLoads	9	-.8164E+01	-.2460E+02	.1160E+03	.0000E+00	-.2451E+03	-.1477E+03
GLoads	10	-.1135E+02	.5434E+03	.2798E+03	.0000E+00	-.8598E+02	.2159E+03
GLoads	27	-.2239E+00	.1840E+02	-.1446E+03	-.3340E+03	.2284E+03	.0000E+00
GLoads	26	.1974E+02	-.5372E+03	-.2512E+03	-.2710E+02	-.7673E+02	.0000E+00

========== I M A G E S 3 D ==========
= Copyright (c) 1984 Celestial Software Inc. =
==========

SOLVE PLATE LOADS/STRESSES Version 2.0 07/01/90

L

Load Case 5:UBC SEISMIC LOAD - NS & WE

GLoads	Node	Fx	Fy	Fz	Mx	My	Mz
				PLATE 9			
GLoads	10	.9932E+01	.4391E+01	.1185E+03	.0000E+00	-.2231E+03	-.2159E+03
GLoads	11	-.1134E+02	.6071E+03	.2882E+03	.0000E+00	-.2615E+03	.2222E+03
GLoads	28	-.2283E+02	-.2981E+02	-.1638E+03	.0000E+00	-.7366E+02	.2140E+03
GLoads	27	.2424E+02	-.5816E+03	-.2429E+03	.1893E+03	.2863E+02	.0000E+00
				PLATE 10			
GLoads	11	.6552E+00	.1734E+03	.2393E+02	.3775E+03	-.3049E+03	.0000E+00
GLoads	12	-.2194E+03	.4798E+03	-.9812E+01	-.2146E+03	-.2153E+03	.0000E+00
GLoads	29	.3143E+02	-.1625E+03	-.2798E+02	-.2016E+03	.8275E+02	.0000E+00
GLoads	28	.1873E+03	-.4908E+03	.1386E+02	.3493E+03	-.1357E+03	.0000E+00
				PLATE 11			
GLoads	12	.6701E+01	.1521E+03	.6694E+01	.2146E+03	-.1427E+03	.0000E+00
GLoads	13	-.2318E+03	.4804E+03	.5184E+01	-.2316E+03	-.2707E+03	.0000E+00
GLoads	30	.1169E+02	-.1539E+03	-.1915E+02	-.4914E+02	-.1076E+02	.0000E+00
GLoads	29	.2134E+03	-.4786E+03	.7275E+01	.3274E+03	.2123E+03	.0000E+00
				PLATE 12			
GLoads	13	.7509E+01	.1497E+03	.2021E+02	.2316E+03	-.3302E+02	.0000E+00
GLoads	14	-.2483E+03	.5019E+03	.1167E+02	-.1146E+03	-.2513E+03	.0000E+00
GLoads	31	.6389E+01	-.1527E+03	-.2279E+02	.1220E+03	-.1382E+03	.0000E+00
GLoads	30	.2344E+03	-.4989E+03	-.9097E+01	.4624E+03	.2539E+03	.0000E+00
				PLATE 13			
GLoads	14	.7248E+01	.1528E+03	.1602E+02	.1146E+03	.9061E+02	.0000E+00
GLoads	15	-.2603E+03	.5245E+03	.2080E+02	.1965E+02	-.1503E+03	.0000E+00
GLoads	32	.6349E+01	-.1575E+03	-.1781E+02	.3074E+03	-.1597E+03	.0000E+00
GLoads	31	.2467E+03	-.5198E+03	-.1902E+02	.3684E+03	.2649E+03	.0000E+00
				PLATE 14			
GLoads	15	.6383E+01	.1612E+03	.1351E+02	-.1965E+02	.1440E+03	.0000E+00
GLoads	16	-.2718E+03	.5533E+03	.8539E+01	-.1822E+01	-.6187E+02	.0000E+00
GLoads	33	.9995E+01	-.1683E+03	-.4430E+01	.2486E+03	-.1808E+03	.0000E+00
GLoads	32	.2554E+03	-.5461E+03	-.1762E+02	.2579E+03	.1609E+03	.0000E+00
				PLATE 15			
GLoads	16	.4197E+01	.1768E+03	.1091E+02	.1822E+01	.1595E+03	.0000E+00
GLoads	17	-.2841E+03	.5944E+03	.4249E+02	.3876E+03	.6702E+02	.0000E+00
GLoads	34	.1942E+02	-.1883E+03	-.2235E+02	.5804E+03	-.1142E+02	.0000E+00
GLoads	33	.2605E+03	-.5828E+03	-.3105E+02	.2050E+03	.9043E+02	.0000E+00
				PLATE 16			
GLoads	19	-.9380E+02	.6926E+02	.8587E+01	-.1818E+03	.3205E+03	.0000E+00
GLoads	20	-.5857E+02	.3090E+03	.7557E+00	-.3468E+02	-.2058E+03	.0000E+00
GLoads	36	.9305E+02	-.6376E+02	-.4858E+01	.2583E+03	-.3937E+03	.0000E+00
GLoads	35	.5931E+02	-.3145E+03	-.4485E+01	.1637E+03	.2230E+03	.0000E+00
				PLATE 17			
GLoads	20	-.1137E+03	.3000E+02	-.1107E+02	-.2540E+03	.3913E+03	.0000E+00

========== I M A G E S 3 D ==========
= Copyright (c) 1984 Celestial Software Inc. =
==========

SOLVE PLATE LOADS/STRESSES Version 2.0 07/01/90

L

Load Case 5:UBC SEISMIC LOAD - NS & WE

GLoads	Node	Fx	Fy	Fz	Mx	My	Mz
GLoads	21	-.5919E+02	.2986E+03	.2030E+02	.1155E+03	-.4961E+02	.0000E+00
GLoads	37	.1171E+03	-.2042E+02	.1108E+02	.3399E+03	-.2035E+03	.0000E+00
GLoads	36	.5571E+02	-.3082E+03	-.2030E+02	.1533E+01	.2906E+03	.0000E+00
				PLATE 18			
GLoads	21	-.1413E+03	-.2561E+02	-.2828E+02	-.2255E+03	.2889E+03	.0000E+00
GLoads	22	-.5214E+02	.2691E+03	.9220E+01	-.5507E+02	.2672E+03	.0000E+00
GLoads	38	.1436E+03	.4234E+02	.4196E+02	-.2828E+02	.6391E+02	.0000E+00
GLoads	37	.4985E+02	-.2858E+03	-.2290E+02	-.1105E+03	.7942E+02	.0000E+00
				PLATE 19			
GLoads	22	-.1132E+02	-.6114E+02	.1152E+03	.0000E+00	.3404E+03	-.8642E+02
GLoads	23	.3345E+02	.3508E+03	.1662E+03	.2459E+03	.3552E+03	.0000E+00
GLoads	39	.2852E+02	.4854E+02	-.1034E+03	.1082E+03	.1386E+03	.0000E+00
GLoads	38	-.5066E+02	-.3382E+03	-.1779E+03	.0000E+00	.1264E+03	-.4643E+02
				PLATE 20			
GLoads	23	-.2497E+02	-.4314E+02	.1219E+03	-.6855E+02	-.8943E+02	.0000E+00
GLoads	24	.1207E+02	.3889E+03	.1781E+03	.2627E+03	.5042E+03	.0000E+00
GLoads	40	.2615E+02	.3681E+02	-.1184E+03	-.9603E+02	.4339E+03	.0000E+00
GLoads	39	-.1324E+02	-.3826E+03	-.1815E+03	-.3820E+03	-.2564E+03	.0000E+00
				PLATE 21			
GLoads	24	-.6980E+01	-.3154E+02	.1284E+03	.1482E+03	-.3470E+03	.0000E+00
GLoads	25	-.3131E+01	.4123E+03	.1800E+03	.2057E+03	.4756E+03	.0000E+00
GLoads	41	.9376E+01	.2540E+02	-.1317E+03	-.2835E+03	.4718E+03	.0000E+00
GLoads	40	.7351E+00	-.4062E+03	-.1767E+03	-.2929E+03	-.5036E+03	.0000E+00
				PLATE 22			
GLoads	25	-.1913E+01	-.2162E+02	.1418E+03	.2047E+03	-.4838E+03	.0000E+00
GLoads	26	-.9390E+01	.4326E+03	.1742E+03	.1273E+03	.3209E+03	.0000E+00
GLoads	42	-.6534E+00	.1596E+02	-.1506E+03	-.3024E+03	.4782E+03	.0000E+00
GLoads	41	.1196E+02	-.4269E+03	-.1654E+03	-.2783E+03	-.4710E+03	.0000E+00
				PLATE 23			
GLoads	26	.1496E+02	-.7928E+01	.1635E+03	.2606E+03	-.4861E+03	.0000E+00
GLoads	27	-.2381E+02	.4541E+03	.1556E+03	-.5301E+02	.4058E+02	.0000E+00
GLoads	43	-.1731E+02	-.1294E+01	-.1767E+03	-.3304E+03	.2107E+03	.0000E+00
GLoads	42	.2615E+02	-.4449E+03	-.1424E+03	-.7178E+02	-.4025E+03	.0000E+00
				PLATE 24			
GLoads	27	.3598E+02	.1260E+02	.1958E+03	.1978E+03	-.2976E+03	.0000E+00
GLoads	28	-.2240E+02	.4223E+03	.9794E+02	.0000E+00	-.4432E+03	.1046E+02
GLoads	44	-.4768E+02	-.5414E+01	-.2013E+03	.0000E+00	-.2554E+03	.4906E+01
GLoads	43	.3410E+02	-.4295E+03	-.9237E+02	.1164E+03	-.8999E+02	.0000E+00
				PLATE 25			
GLoads	28	-.9741E+02	.4959E+02	.1039E+02	-.1336E+03	-.5651E+03	.0000E+00
GLoads	29	-.1603E+03	.4382E+03	-.4460E+02	-.2483E+03	-.2296E+03	.0000E+00
GLoads	45	.7585E+02	-.6444E+02	-.3284E+02	-.1958E+03	.5182E+01	.0000E+00

========== I M A G E S 3 D ==========
= Copyright (c) 1984 Celestial Software Inc. =
==========

SOLVE PLATE LOADS/STRESSES Version 2.0 07/01/90

L

Load Case 5:UBC SEISMIC LOAD - NS & WE

GLoads	Node	Fx	Fy	Fz	Mx	My	Mz
GLoads	44	.1818E+03	-.4234E+03	.6705E+02	-.1750E+03	-.3850E+03	.0000E+00
			PLATE 26				
GLoads	29	-.4910E+02	.1084E+03	.2990E+02	.1225E+03	-.6548E+02	.0000E+00
GLoads	30	-.1765E+03	.4369E+03	-.1789E+02	-.2947E+03	-.4599E+03	.0000E+00
GLoads	46	.4888E+02	-.1097E+03	-.3020E+02	.4923E+02	-.3285E+03	.0000E+00
GLoads	45	.1767E+03	-.4356E+03	.1818E+02	.3872E+03	.1246E+03	.0000E+00
			PLATE 27				
GLoads	30	-.3416E+02	.1215E+03	.1072E+02	-.1186E+03	.2168E+03	.0000E+00
GLoads	31	-.1854E+03	.4443E+03	-.2729E+01	-.3097E+03	-.4931E+03	.0000E+00
GLoads	47	.3994E+02	-.1258E+03	-.1395E+02	.2564E+03	-.4017E+03	.0000E+00
GLoads	46	.1796E+03	-.4400E+03	.5953E+01	.3478E+03	.4251E+03	.0000E+00
			PLATE 28				
GLoads	31	-.3225E+02	.1338E+03	.9121E+01	-.1808E+03	.3664E+03	.0000E+00
GLoads	32	-.1893E+03	.4602E+03	.5818E+01	-.2694E+03	-.4077E+03	.0000E+00
GLoads	48	.4215E+02	-.1387E+03	-.9623E+01	.3494E+03	-.4526E+03	.0000E+00
GLoads	47	.1794E+03	-.4552E+03	-.5316E+01	.4294E+03	.4362E+03	.0000E+00
			PLATE 29				
GLoads	32	-.3698E+02	.1490E+03	-.5803E+01	-.2960E+03	.4065E+03	.0000E+00
GLoads	33	-.1854E+03	.4787E+03	.1167E+02	-.2364E+03	-.2253E+03	.0000E+00
GLoads	49	.5023E+02	-.1562E+03	.1082E+02	.3659E+03	-.2765E+03	.0000E+00
GLoads	48	.1721E+03	-.4716E+03	-.1669E+02	.2955E+03	.4363E+03	.0000E+00
			PLATE 30				
GLoads	33	-.4972E+02	.1780E+03	-.1160E+02	-.2172E+03	.3156E+03	.0000E+00
GLoads	34	-.1654E+03	.5035E+03	.3543E+02	-.8081E+01	.7765E+02	.0000E+00
GLoads	50	.6933E+02	-.1915E+03	.5586E+01	.4610E+03	-.7479E+01	.0000E+00
GLoads	49	.1458E+03	-.4900E+03	-.2942E+02	.2886E+03	.2363E+03	.0000E+00
			PLATE 31				
GLoads	35	-.5837E+02	.1079E+03	-.2287E+01	-.2488E+03	.4005E+03	.0000E+00
GLoads	36	-.2072E+02	.2289E+03	.7644E+01	-.1046E+03	-.3237E+03	.0000E+00
GLoads	52	.5105E+02	-.1016E+03	.6247E+01	.2905E+03	-.3049E+03	.0000E+00
GLoads	51	.2803E+02	-.2352E+03	-.1160E+02	.1807E+03	.4179E+03	.0000E+00
			PLATE 32				
GLoads	36	-.9614E+02	.5800E+02	-.1439E+02	-.1552E+03	.4268E+03	.0000E+00
GLoads	37	-.1121E+02	.2211E+03	.1689E+02	-.9187E+02	-.1263E+03	.0000E+00
GLoads	53	.9245E+02	-.4825E+02	.1329E+02	.1254E+03	-.2241E+03	.0000E+00
GLoads	52	.1490E+02	-.2308E+03	-.1579E+02	.1767E+03	.3361E+03	.0000E+00
			PLATE 33				
GLoads	37	-.1238E+03	.6531E-01	-.3698E+02	-.1376E+03	.2504E+03	.0000E+00
GLoads	38	-.1457E+02	.2119E+03	.2980E+02	.1191E+02	.2404E+03	.0000E+00
GLoads	54	.1217E+03	.1095E+02	.4430E+02	.2706E+02	.2485E+03	.0000E+00
GLoads	53	.1671E+02	-.2229E+03	-.3712E+02	-.5927E+02	.2735E+03	.0000E+00
			PLATE 34				
GLoads	38	-.3361E+02	-.2618E+02	.6117E+02	.0000E+00	.3150E+03	.1777E+01

========== I M A G E S 3 D ==========
= Copyright (c) 1984 Celestial Software Inc. =
==========

SOLVE PLATE LOADS/STRESSES Version 2.0 07/01/90

L

Load Case 5:UBC SEISMIC LOAD - NS & WE

GLoads	Node	Fx	Fy	Fz	Mx	My	Mz
GLoads	39	.4127E+02	.2777E+03	.1515E+03	.1418E+03	.3167E+03	.0000E+00
GLoads	55	.3812E+02	.2420E+02	-.5688E+02	.4967E+02	.3041E+03	.0000E+00
GLoads	54	-.4578E+02	-.2757E+03	-.1558E+03	.0000E+00	.2947E+03	.2119E+02
			PLATE 35				
GLoads	39	-.2036E+02	-.4014E+02	.9722E+02	.1320E+03	-.1989E+03	.0000E+00
GLoads	40	.1750E+02	.3050E+03	.1420E+03	.1943E+03	.5805E+03	.0000E+00
GLoads	56	.1734E+02	.3448E+02	-.9264E+02	-.2122E+03	.4808E+03	.0000E+00
GLoads	55	-.1447E+02	-.2993E+03	-.1465E+03	-.1772E+03	-.3224E+03	.0000E+00
			PLATE 36				
GLoads	40	-.8190E+01	-.3211E+02	.1170E+03	.1946E+03	-.5108E+03	.0000E+00
GLoads	41	.6035E+01	.3191E+03	.1276E+03	.2841E+03	.6040E+03	.0000E+00
GLoads	57	.7917E+01	.2809E+02	-.1109E+03	-.2152E+03	.6356E+03	.0000E+00
GLoads	56	-.5761E+01	-.3151E+03	-.1337E+03	-.3109E+03	-.5126E+03	.0000E+00
			PLATE 37				
GLoads	41	.8822E+01	-.1410E+02	.1332E+03	.2778E+03	-.6048E+03	.0000E+00
GLoads	42	-.9557E+01	.3251E+03	.1008E+03	.1996E+03	.4860E+03	.0000E+00
GLoads	58	-.8582E+01	.7142E+01	-.1267E+03	-.2804E+03	.4896E+03	.0000E+00
GLoads	57	.9318E+01	-.3181E+03	-.1073E+03	-.2131E+03	-.6519E+03	.0000E+00
			PLATE 38				
GLoads	42	.2024E+02	.7387E+01	.1560E+03	.1746E+03	-.5617E+03	.0000E+00
GLoads	43	-.2448E+02	.3185E+03	.6162E+02	.1009E+03	.1370E+03	.0000E+00
GLoads	59	-.1856E+02	-.9618E+01	-.1473E+03	-.1777E+03	.2437E+03	.0000E+00
GLoads	58	.2280E+02	-.3163E+03	-.7037E+02	-.1910E+03	-.4862E+03	.0000E+00
			PLATE 39				
GLoads	43	.4388E+02	.1576E+02	.1712E+03	.1131E+03	-.2577E+03	.0000E+00
GLoads	44	-.3634E+02	.3007E+03	.3138E+02	.0000E+00	-.4365E+03	.1559E+02
GLoads	60	-.4848E+02	-.1313E+02	-.1559E+03	.0000E+00	-.3923E+03	-.1510E+01
GLoads	59	.4094E+02	-.3033E+03	-.4673E+02	.6693E+02	-.2282E+03	.0000E+00
			PLATE 40				
GLoads	44	-.4532E+02	.3401E+02	.4798E+02	.1192E+03	-.5862E+03	.0000E+00
GLoads	45	-.1629E+03	.3443E+03	-.4667E+02	-.7215E+02	-.1570E+03	.0000E+00
GLoads	61	.3723E+02	-.4222E+02	-.4754E+02	-.6930E+02	-.1388E+03	.0000E+00
GLoads	60	.1710E+03	-.3361E+03	.4623E+02	.5121E+02	-.5469E+03	.0000E+00
			PLATE 41				
GLoads	45	-.5422E+02	.6129E+02	.2591E+02	-.1193E+03	.2719E+02	.0000E+00
GLoads	46	-.1470E+03	.3615E+03	-.2457E+02	-.1778E+03	-.4926E+03	.0000E+00
GLoads	62	.4530E+02	-.6957E+02	-.2515E+02	.1918E+03	-.4221E+03	.0000E+00
GLoads	61	.1560E+03	-.3532E+03	.2382E+02	.1347E+03	.1333E+03	.0000E+00
			PLATE 42				
GLoads	46	-.4607E+02	.9376E+02	.1340E+02	-.2192E+03	.3960E+03	.0000E+00
GLoads	47	-.1393E+03	.3673E+03	-.1305E+02	-.3117E+03	-.5556E+03	.0000E+00
GLoads	63	.4073E+02	-.9846E+02	-.1246E+02	.2489E+03	-.6181E+03	.0000E+00

========== I M A G E S 3 D ==========
= Copyright (c) 1984 Celestial Software Inc. =
==========

SOLVE PLATE LOADS/STRESSES Version 2.0 07/01/90

L

Load Case 5:UBC SEISMIC LOAD - NS & WE

GLoads	Node	Fx	Fy	Fz	Mx	My	Mz
GLoads	62	.1446E+03	-.3626E+03	.1211E+02	.2897E+03	.3906E+03	.0000E+00
			PLATE 43				
GLoads	47	-.4467E+02	.1193E+03	-.3091E+01	-.3741E+03	.5211E+03	.0000E+00
GLoads	48	-.1253E+03	.3721E+03	.6283E+00	-.3025E+03	-.4884E+03	.0000E+00
GLoads	64	.4081E+02	-.1256E+03	.4546E+01	.3875E+03	-.5031E+03	.0000E+00
GLoads	63	.1291E+03	-.3657E+03	-.2083E+01	.2349E+03	.5489E+03	.0000E+00
			PLATE 44				
GLoads	48	-.5363E+02	.1438E+03	-.9729E+01	-.3424E+03	.5047E+03	.0000E+00
GLoads	49	-.1012E+03	.3731E+03	.1001E+02	-.3083E+03	-.2749E+03	.0000E+00
GLoads	65	.5343E+02	-.1485E+03	.7050E+01	.3421E+03	-.3661E+03	.0000E+00
GLoads	64	.1014E+03	-.3684E+03	-.7335E+01	.3149E+03	.3951E+03	.0000E+00
			PLATE 45				
GLoads	49	-.5934E+02	.1786E+03	-.2683E+02	-.3462E+03	.3150E+03	.0000E+00
GLoads	50	-.5737E+02	.3494E+03	.1858E+02	-.2721E+03	.5883E+02	.0000E+00
GLoads	66	.4553E+02	-.1801E+03	.2709E+02	.2471E+03	.3797E+02	.0000E+00
GLoads	65	.7119E+02	-.3479E+03	-.1884E+02	.1897E+03	.2809E+03	.0000E+00
			PLATE 46				
GLoads	51	-.6584E+01	.1431E+03	-.9653E+01	-.2195E+03	.3453E+03	.0000E+00
GLoads	52	.5695E+01	.1393E+03	-.5442E+01	-.3094E+03	-.3161E+03	.0000E+00
GLoads	68	-.4633E+01	-.1378E+03	-.6612E+00	.2457E+02	-.3609E+03	.0000E+00
GLoads	67	.5522E+01	-.1445E+03	.1576E+02	.1722E+03	.2483E+03	.0000E+00
			PLATE 47				
GLoads	52	-.3974E+02	.1081E+03	-.1693E+02	-.1579E+03	.2849E+03	.0000E+00
GLoads	53	.1598E+02	.1440E+03	.1124E+02	-.1793E+03	-.2306E+03	.0000E+00
GLoads	69	.2600E+02	-.1058E+03	.1383E+02	.8275E+02	-.7809E+02	.0000E+00
GLoads	68	-.2239E+01	-.1463E+03	-.8144E+01	.1293E+03	.3664E+03	.0000E+00
			PLATE 48				
GLoads	53	-.9323E+02	.4202E+02	-.1932E+02	.1132E+03	.1812E+03	.0000E+00
GLoads	54	.1821E+02	.1491E+03	.3886E+02	.3202E+01	.1146E+03	.0000E+00
GLoads	70	.9356E+02	-.2830E+02	-.3657E+01	.4468E+02	.5497E+02	.0000E+00
GLoads	69	-.1854E+02	-.1628E+03	-.1588E+02	.2689E+03	.1302E+03	.0000E+00
			PLATE 49				
GLoads	54	-.5069E+02	.9888E+01	.2956E+02	.0000E+00	.2568E+03	.3597E+02
GLoads	55	.3140E+02	.1989E+03	.1033E+03	-.8487E+02	.2612E+03	.0000E+00
GLoads	71	.3857E+02	-.1026E+02	-.3734E+02	-.2310E+03	.2664E+03	.0000E+00
GLoads	70	-.1928E+02	-.1985E+03	-.9555E+02	.0000E+00	.3002E+03	.7257E+02
			PLATE 50				
GLoads	55	-.1886E+02	-.2024E+02	.6391E+02	.2124E+03	-.2429E+03	.0000E+00
GLoads	56	.2819E+02	.2140E+03	.1038E+03	.2286E+03	.5141E+03	.0000E+00
GLoads	72	.2715E+02	.2403E+02	-.6037E+02	-.1127E+03	.6314E+03	.0000E+00
GLoads	71	-.3649E+02	-.2178E+03	-.1073E+03	-.1230E+03	-.4473E+02	.0000E+00
			PLATE 51				
GLoads	56	-.3586E+01	-.2984E+02	.8637E+02	.2945E+03	-.4824E+03	.0000E+00

========== I M A G E S 3 D ==========
= Copyright (c) 1984 Celestial Software Inc. =
==========

SOLVE PLATE LOADS/STRESSES Version 2.0 07/01/90

L

Load Case 5:UBC SEISMIC LOAD - NS & WE

GLoads	Node	Fx	Fy	Fz	Mx	My	Mz
GLoads	57	.1024E+02	.2109E+03	.8126E+02	.2320E+03	.6514E+03	.0000E+00
GLoads	73	.7267E+01	.2704E+02	-.8382E+02	-.2366E+03	.6062E+03	.0000E+00
GLoads	72	-.1392E+02	-.2081E+03	-.8381E+02	-.1435E+03	-.5038E+03	.0000E+00
			PLATE 52				
GLoads	57	.8712E+01	-.1737E+02	.1008E+03	.1963E+03	-.6351E+03	.0000E+00
GLoads	58	-.5438E+01	.2055E+03	.5462E+02	.2876E+03	.5040E+03	.0000E+00
GLoads	74	-.9427E+01	.1519E+02	-.9464E+02	-.1412E+03	.5048E+03	.0000E+00
GLoads	73	.6153E+01	-.2033E+03	-.6082E+02	-.2706E+03	-.6042E+03	.0000E+00
			PLATE 53				
GLoads	58	.2741E+02	.7180E+01	.1063E+03	.1838E+03	-.5074E+03	.0000E+00
GLoads	59	-.2226E+02	.2058E+03	.2819E+02	.1803E+03	.2197E+03	.0000E+00
GLoads	75	-.3007E+02	-.1492E+02	-.9154E+02	-.1127E+03	.8859E+02	.0000E+00
GLoads	74	.2493E+02	-.1980E+03	-.4291E+02	-.1382E+03	-.6121E+03	.0000E+00
			PLATE 54				
GLoads	59	.3607E+02	.1070E+02	.1296E+03	-.6945E+02	-.2352E+03	.0000E+00
GLoads	60	-.4920E+02	.2159E+03	.1469E+02	.0000E+00	-.3664E+03	.3357E+02
GLoads	76	-.2932E+02	-.1109E+02	-.1287E+03	.0000E+00	-.3645E+03	.3373E+02
GLoads	75	.4245E+02	-.2155E+03	-.1558E+02	-.1521E+03	-.2510E+03	.0000E+00
			PLATE 55				
GLoads	60	-.2235E+02	.3293E+02	.4732E+02	-.1194E+02	-.4806E+03	.0000E+00
GLoads	61	-.1268E+03	.2566E+03	-.3895E+02	.9924E+02	-.1384E+03	.0000E+00
GLoads	77	.2581E+02	-.4032E+02	-.4295E+02	.1472E+03	-.1669E+03	.0000E+00
GLoads	76	.1233E+03	-.2492E+03	.3458E+02	-.5037E+02	-.4561E+03	.0000E+00
			PLATE 56				
GLoads	61	-.3104E+02	.4442E+02	.2726E+02	-.1646E+03	.1439E+03	.0000E+00
GLoads	62	-.1266E+03	.2760E+03	-.2936E+02	-.1399E+03	-.4200E+03	.0000E+00
GLoads	78	.2522E+02	-.4728E+02	-.2767E+02	.1588E+03	-.5746E+03	.0000E+00
GLoads	77	.1324E+03	-.2731E+03	.2976E+02	.9958E+02	-.1414E+02	.0000E+00
			PLATE 57				
GLoads	62	-.2791E+02	.6183E+02	.6988E+01	-.3416E+03	.4515E+03	.0000E+00
GLoads	63	-.1173E+03	.2748E+03	-.1181E+02	-.1570E+03	-.5580E+03	.0000E+00
GLoads	79	.1346E+02	-.6424E+02	-.7356E+01	.3166E+03	-.5978E+03	.0000E+00
GLoads	78	.1317E+03	-.2724E+03	.1218E+02	.7590E+02	.4136E+03	.0000E+00
			PLATE 58				
GLoads	63	-.1716E+02	.9494E+02	-.9054E+01	-.3268E+03	.6272E+03	.0000E+00
GLoads	64	-.9340E+02	.2593E+03	-.1445E+01	-.2740E+03	-.3982E+03	.0000E+00
GLoads	80	-.2787E+01	-.9891E+02	.1465E+02	.2050E+03	-.5391E+03	.0000E+00
GLoads	79	.1133E+03	-.2553E+03	-.4154E+01	.1648E+03	.5105E+03	.0000E+00
			PLATE 59				
GLoads	64	-.1344E+02	.1403E+03	-.3118E+02	-.4283E+03	.5063E+03	.0000E+00
GLoads	65	-.5386E+02	.2473E+03	.9692E+01	-.2522E+03	-.1353E+03	.0000E+00
GLoads	81	-.1069E+02	-.1497E+03	.4465E+02	.2257E+03	-.8226E+02	.0000E+00

========== I M A G E S 3 D ==========
= Copyright (c) 1984 Celestial Software Inc. =
==========

SOLVE PLATE LOADS/STRESSES Version 2.0 07/01/90

L

Load Case 5:UBC SEISMIC LOAD - NS & WE

GLoads	Node	Fx	Fy	Fz	Mx	My	Mz
GLoads	80	.7799E+02	-.2380E+03	-.2317E+02	-.1787E+02	.5356E+03	.0000E+00
			PLATE 60				
GLoads	65	-.3535E+02	.1546E+03	-.3331E+02	-.2796E+03	.2205E+03	.0000E+00
GLoads	66	-.1934E+02	.2290E+03	.1147E+02	-.3131E+03	.1792E+03	.0000E+00
GLoads	82	.3860E+02	-.1497E+03	.3935E+02	.3631E+02	.2518E+03	.0000E+00
GLoads	81	.1608E+02	-.2340E+03	-.1752E+02	.7610E+02	.1192E+03	.0000E+00
			PLATE 61				
GLoads	67	.3003E+02	.1352E+03	-.2231E+02	-.2779E+03	.1495E+03	.0000E+00
GLoads	68	-.4741E+01	.7173E+02	-.3918E+01	-.2530E+03	-.2681E+03	.0000E+00
GLoads	84	-.4980E+02	-.1226E+03	.3763E+02	-.1003E+03	.2012E+03	.0000E+00
GLoads	83	.2451E+02	-.8433E+02	-.1141E+02	-.8999E+02	.3782E+03	.0000E+00
			PLATE 62				
GLoads	68	.4751E+02	.1167E+03	-.2317E+02	.9919E+02	.2626E+03	.0000E+00
GLoads	69	-.1404E+02	.4282E+02	.8355E+01	-.4156E+03	-.1298E+03	.0000E+00
GLoads	85	-.1067E+03	-.1102E+03	.3451E+02	-.3486E+03	.3247E+02	.0000E+00
GLoads	84	.7323E+02	-.4933E+02	-.1969E+02	.2576E+03	.4206E+03	.0000E+00
			PLATE 63				
GLoads	69	.4247E+02	.1300E+03	-.4220E+02	.6401E+02	.7764E+02	.0000E+00
GLoads	70	.2723E+01	.5275E+02	.3760E+02	-.1103E+03	.1378E+03	.0000E+00
GLoads	86	-.1353E+03	-.1437E+03	.7686E+02	-.1289E+03	.7653E+03	.0000E+00
GLoads	85	.9014E+02	-.3909E+02	-.7225E+02	.4863E+02	.5834E+03	.0000E+00
			PLATE 64				
GLoads	70	-.2971E+02	.3804E+02	.1333E+02	.0000E+00	.3163E+03	-.1605E+03
GLoads	71	.4582E+02	.1319E+03	.5245E+02	-.1623E+02	-.2470E+02	.0000E+00
GLoads	87	.2239E+02	-.1516E+02	-.1009E+02	.5791E+02	.9056E+02	.0000E+00
GLoads	86	-.3850E+02	-.1547E+03	-.5568E+02	.0000E+00	.6750E+03	-.2408E+03
			PLATE 65				
GLoads	71	-.7189E+01	-.1240E+02	.5149E+02	.3703E+03	-.1969E+03	.0000E+00
GLoads	72	.2731E+02	.1007E+03	.1124E+02	.6069E+02	.4414E+03	.0000E+00
GLoads	88	-.2153E+02	.1060E+02	-.7733E+02	-.1292E+03	.2130E+03	.0000E+00
GLoads	87	.1409E+01	-.9890E+02	.1460E+02	.2515E+03	-.3679E+03	.0000E+00
			PLATE 66				
GLoads	72	.1773E+00	-.2522E+02	.9222E+02	.1954E+03	-.5689E+03	.0000E+00
GLoads	73	.1274E+02	.1122E+03	-.1588E+02	.2617E+03	.5665E+03	.0000E+00
GLoads	89	-.1064E+02	.2327E+02	-.1244E+03	-.2270E+02	.4892E+03	.0000E+00
GLoads	88	-.2277E+01	-.1102E+03	.4807E+02	-.7924E+02	-.4542E+03	.0000E+00
			PLATE 67				
GLoads	73	.1455E+02	-.4451E+02	.1198E+03	.2455E+03	-.5685E+03	.0000E+00
GLoads	74	.1278E+01	.1296E+03	-.2119E+02	.2600E+03	.5957E+03	.0000E+00
GLoads	90	-.1101E+02	.4537E+02	-.1495E+03	-.2309E+02	.4162E+03	.0000E+00
GLoads	89	-.4825E+01	-.1305E+03	.5089E+02	-.4702E+02	-.5943E+03	.0000E+00
			PLATE 68				
GLoads	74	.2393E+02	-.5534E+02	.1180E+03	.1943E+02	-.4885E+03	.0000E+00

========== I M A G E S 3 D ==========
= Copyright (c) 1984 Celestial Software Inc. =
==========

SOLVE PLATE LOADS/STRESSES Version 2.0 07/01/90

L

Load Case 5:UBC SEISMIC LOAD - NS & WE

GLoads	Node	Fx	Fy	Fz	Mx	My	Mz
GLoads	75	-.1470E+02	.1270E+03	-.1243E+02	.2938E+03	.2748E+03	.0000E+00
GLoads	91	-.2966E+01	.6034E+02	-.1336E+03	.1366E+03	.3337E+03	.0000E+00
GLoads	90	-.6270E+01	-.1320E+03	.2805E+02	-.1958E+03	-.3938E+03	.0000E+00
			PLATE 69				
GLoads	75	.4303E+02	-.5116E+01	.7884E+02	-.2898E+02	-.1124E+03	.0000E+00
GLoads	76	-.3276E+02	.1421E+03	-.7465E+01	.0000E+00	-.2897E+03	-.1489E+03
GLoads	92	-.3617E+02	-.1545E+02	-.2853E+02	.0000E+00	-.4335E+03	-.1792E+03
GLoads	91	.2590E+02	-.1215E+03	-.4285E+02	-.1682E+02	-.2329E+03	.0000E+00
			PLATE 70				
GLoads	76	-.7186E+01	-.1133E+02	.4481E+02	-.7751E+01	-.3640E+03	.0000E+00
GLoads	77	-.1251E+03	.2252E+03	-.4148E+02	.9877E+02	-.3911E+02	.0000E+00
GLoads	93	-.1572E+02	.1459E+02	-.3502E+02	.5851E+02	-.2294E+03	.0000E+00
GLoads	92	.1480E+03	-.2285E+03	.3169E+02	-.5802E+02	-.5277E+03	.0000E+00
			PLATE 71				
GLoads	77	.6657E+01	-.1800E+02	.1483E+02	-.3456E+03	.2201E+03	.0000E+00
GLoads	78	-.1382E+03	.2169E+03	-.2586E+02	.3961E+02	-.4181E+03	.0000E+00
GLoads	94	-.3786E+02	.2168E+02	.5005E+01	.2215E+03	-.3849E+03	.0000E+00
GLoads	93	.1694E+03	-.2205E+03	.6021E+01	-.2188E+03	.2667E+03	.0000E+00
			PLATE 72				
GLoads	78	.2111E+02	-.3388E+01	.1506E+01	-.2744E+03	.5791E+03	.0000E+00
GLoads	79	-.1270E+03	.1878E+03	-.1301E+02	-.1311E+03	-.4918E+03	.0000E+00
GLoads	95	-.4461E+02	.4283E+01	.2070E+01	.1140E+03	-.6026E+03	.0000E+00
GLoads	94	.1505E+03	-.1887E+03	.9435E+01	-.2492E+02	.3494E+03	.0000E+00
			PLATE 73				
GLoads	79	.4008E+02	.2552E+02	-.1532E+02	-.3502E+03	.5792E+03	.0000E+00
GLoads	80	-.1112E+03	.1532E+03	-.6500E+01	-.1668E+03	-.4888E+03	.0000E+00
GLoads	96	-.6594E+02	-.2420E+02	.1151E+02	.3176E+02	-.4605E+03	.0000E+00
GLoads	95	.1371E+03	-.1545E+03	.1031E+02	-.1146E+03	.4461E+03	.0000E+00
			PLATE 74				
GLoads	80	.7583E+02	.7748E+02	-.2482E+02	-.2035E+02	.4923E+03	.0000E+00
GLoads	81	-.8973E+02	.1019E+03	.3904E+02	.1980E+03	-.4756E+02	.0000E+00
GLoads	97	-.1297E+03	-.7670E+02	-.2418E+02	.1340E+03	-.3929E+03	.0000E+00
GLoads	96	.1436E+03	-.1027E+03	.9959E+01	.7938E+02	.1735E+03	.0000E+00
			PLATE 75				
GLoads	81	.1242E+03	.1755E+03	-.1060E+03	-.4999E+03	.1059E+02	.0000E+00
GLoads	82	-.5551E+02	.6702E+02	-.6187E+02	-.1458E+04	.8198E+03	.0000E+00
GLoads	98	-.2705E+03	-.1915E+03	.1980E+03	-.1829E+04	.1100E+04	.0000E+00
GLoads	97	.2019E+03	-.5106E+02	-.3007E+02	-.8298E+03	.1336E+03	.0000E+00
			PLATE 76				
GLoads	83	.8052E+01	.7764E+02	-.1180E+02	-.3122E+03	-.4795E+03	.0000E+00
GLoads	84	-.3537E+02	.7175E+02	-.8782E+02	-.3337E+03	-.3041E+03	.0000E+00
GLoads	100	-.6034E+01	-.3876E+02	-.9399E+02	-.5040E+03	-.7236E+03	.0000E+00

========== I M A G E S 3 D ==========
= Copyright (c) 1984 Celestial Software Inc. =
==========

SOLVE PLATE LOADS/STRESSES Version 2.0 07/01/90

L

Load Case 5:UBC SEISMIC LOAD - NS & WE

GLoads	Node	Fx	Fy	Fz	Mx	My	Mz
GLoads	99	.3336E+02	-.1106E+03	.1936E+03	-.4937E+03	-.9775E+03	.0000E+00
				PLATE 77			
GLoads	84	.4385E+02	.1511E+02	.3797E+02	.1765E+03	-.3177E+03	.0000E+00
GLoads	85	-.4271E+02	.8860E+01	-.1656E+02	.6135E+02	-.4360E+03	.0000E+00
GLoads	101	-.2218E+02	-.1024E+02	-.1084E+03	.1799E+02	-.4947E+03	.0000E+00
GLoads	100	.2104E+02	-.1373E+02	.8695E+02	.9750E+02	-.4590E+03	.0000E+00
				PLATE 78			
GLoads	85	.9119E+02	.5532E+02	.2240E+02	.2387E+03	-.1799E+03	.0000E+00
GLoads	86	-.6886E+02	.5751E+02	-.2472E+02	-.2420E+03	-.1198E+03	.0000E+00
GLoads	102	-.6052E+02	-.8447E+02	-.8260E+02	-.2436E+03	-.6399E+03	.0000E+00
GLoads	101	.3820E+02	-.2836E+02	.8493E+02	.2086E+03	-.5272E+03	.0000E+00
				PLATE 79			
GLoads	86	-.2739E+02	.7801E+02	.4730E+02	.0000E+00	.6277E+03	-.3064E+03
GLoads	87	.5847E+02	-.1111E+02	-.1135E+03	-.2201E+03	.1931E+03	.0000E+00
GLoads	103	.1056E+03	-.5933E+02	-.1269E+03	.0000E+00	.6916E+03	.2119E+02
GLoads	102	-.1366E+03	-.7578E+01	.1930E+03	.0000E+00	.1030E+04	-.4478E+03
				PLATE 80			
GLoads	87	-.4608E+02	.2866E+02	.7277E+02	-.8931E+02	.8420E+02	.0000E+00
GLoads	88	.4819E+02	-.6779E+01	-.1074E+03	-.1183E+02	.2636E+03	.0000E+00
GLoads	104	.8150E+02	-.3011E+02	-.1092E+03	.0000E+00	.8685E+03	-.1255E+03
GLoads	103	-.8360E+02	.8229E+01	.1438E+03	.0000E+00	.7938E+03	-.1034E+02
				PLATE 81			
GLoads	88	.1181E+02	.9913E+01	.1005E+03	.2203E+03	-.2245E+02	.0000E+00
GLoads	89	.3626E+02	.2224E+02	-.8980E+02	.5530E+02	.2982E+03	.0000E+00
GLoads	105	.2421E+02	-.1085E+02	-.1158E+03	.0000E+00	.4602E+03	-.1822E+03
GLoads	104	-.7228E+02	-.2130E+02	.1051E+03	.0000E+00	.2014E+03	-.3354E+03
				PLATE 82			
GLoads	89	.1539E+02	-.1156E+02	.1271E+03	.1442E+02	-.1932E+03	.0000E+00
GLoads	90	.1821E+02	.4034E+02	-.7775E+02	.1739E+03	.1915E+03	.0000E+00
GLoads	106	-.2290E+02	.1225E+02	-.1427E+03	.0000E+00	.1255E+03	-.2496E+03
GLoads	105	-.1070E+02	-.4102E+02	.9326E+02	.0000E+00	-.1965E+03	-.1165E+03
				PLATE 83			
GLoads	90	.3526E+02	-.5020E+02	.1630E+03	.4498E+02	-.2140E+03	.0000E+00
GLoads	91	-.1202E+02	.6304E+02	-.5588E+02	.1084E+03	.9986E+02	.0000E+00
GLoads	107	-.5666E+02	.5101E+02	-.2052E+03	.0000E+00	-.3508E+03	-.1236E+03
GLoads	106	.3343E+02	-.6385E+02	.9804E+02	.0000E+00	-.5997E+03	-.1064E+03
				PLATE 84			
GLoads	91	.2527E+02	-.9836E+02	.1962E+03	-.2281E+03	-.2006E+03	.0000E+00
GLoads	92	-.6132E+02	.1062E+03	-.8498E+01	.0000E+00	-.2934E+03	.1179E+03
GLoads	108	-.4054E+02	.9359E+02	-.3124E+03	.0000E+00	-.5459E+03	.8877E+02
GLoads	107	.7659E+02	-.1014E+03	.1247E+03	.0000E+00	-.5389E+03	.1601E+03
				PLATE 85			
GLoads	92	.2524E+02	-.2088E+00	.1021E+03	.4647E+03	-.2741E+03	.0000E+00

========== I M A G E S 3 D ==========
= Copyright (c) 1984 Celestial Software Inc. =
==========

SOLVE PLATE LOADS/STRESSES Version 2.0 07/01/90

L

Load Case 5:UBC SEISMIC LOAD - NS & WE

GLoads	Node	Fx	Fy	Fz	Mx	My	Mz
GLoads	93	-.1519E+03	.1211E+03	-.8949E+01	.3510E+03	-.1658E+03	.0000E+00
GLoads	109	-.6611E+02	.1666E+02	-.8074E+02	.2887E+03	-.4600E+03	.0000E+00
GLoads	108	.1928E+03	-.1376E+03	-.1243E+02	.4329E+03	-.4604E+03	.0000E+00
				PLATE 86			
GLoads	93	.3359E+02	-.9588E+01	.2538E+01	-.1907E+03	.1285E+03	.0000E+00
GLoads	94	-.1048E+03	.7077E+02	-.3394E+02	-.3086E+02	-.1739E+03	.0000E+00
GLoads	110	-.4435E+02	.6712E+01	-.2855E+02	-.9512E+02	-.5737E+03	.0000E+00
GLoads	109	.1156E+03	-.6789E+02	.5996E+02	-.2015E+03	-.3287E+03	.0000E+00
				PLATE 87			
GLoads	94	.2753E+02	.1821E+01	-.1591E+02	-.1658E+03	.2094E+03	.0000E+00
GLoads	95	-.7838E+02	.5757E+02	-.1493E+02	.2362E+02	-.1592E+03	.0000E+00
GLoads	111	-.2825E+02	-.2261E+01	.1250E+02	-.1099E+03	-.1980E+03	.0000E+00
GLoads	110	.7909E+02	-.5713E+02	.1833E+02	-.2567E+03	.1111E+03	.0000E+00
				PLATE 88			
GLoads	95	.2133E+02	-.1810E+01	-.3286E+02	-.2302E+02	.3158E+03	.0000E+00
GLoads	96	-.6847E+02	.4659E+02	-.2445E+00	-.6809E+02	.7957E+01	.0000E+00
GLoads	112	-.1167E+02	.4686E+01	.5928E+02	-.2560E+03	.1633E+03	.0000E+00
GLoads	111	.5880E+02	-.4947E+02	-.2618E+02	-.1991E+03	.4083E+03	.0000E+00
				PLATE 89			
GLoads	96	.2625E+02	-.1415E+02	-.5663E+02	-.4305E+02	.2790E+03	.0000E+00
GLoads	97	-.8372E+02	.4821E+02	.7261E+01	-.1539E+03	.7203E+02	.0000E+00
GLoads	113	.9340E+01	.1432E+02	.1174E+03	-.3541E+03	.7294E+03	.0000E+00
GLoads	112	.4813E+02	-.4838E+02	-.6798E+02	-.2636E+03	.8096E+03	.0000E+00
				PLATE 90			
GLoads	97	.4694E+02	-.1488E+02	.1158E+02	.8497E+03	.1873E+03	.0000E+00
GLoads	98	-.1612E+03	.1360E+03	.2396E+03	.1582E+04	.7343E+03	.0000E+00
GLoads	114	.5872E+02	-.1172E+02	-.1059E+03	.1221E+04	.7318E+03	.0000E+00
GLoads	113	.5553E+02	-.1094E+03	-.1453E+03	.4927E+03	.3741E+03	.0000E+00
				PLATE 91			
GLoads	122	-.3219E+02	.1744E+03	.8481E+02	.7412E+03	.9659E+02	.0000E+00
GLoads	2	-.1426E+03	.3907E+03	.5980E+02	.6685E+03	.1995E+02	.0000E+00
GLoads	19	.7024E+02	-.1985E+03	-.6454E+02	.8448E+03	-.1590E+03	.0000E+00
GLoads	124	.1045E+03	-.3666E+03	-.8008E+02	.9270E+03	-.5217E+02	.0000E+00
				PLATE 92			
GLoads	124	-.7385E+02	.2470E+03	.5064E+02	.2187E+03	.1360E+03	.0000E+00
GLoads	19	-.5628E+02	.3766E+03	.3089E+02	.2233E+03	-.8803E+02	.0000E+00
GLoads	35	.7138E+02	-.2335E+03	-.3680E+02	.6652E+03	-.2040E+03	.0000E+00
GLoads	126	.5875E+02	-.3901E+03	-.4473E+02	.6865E+03	.3790E+02	.0000E+00
				PLATE 93			
GLoads	126	-.2715E+02	.2975E+03	.1503E+02	-.2081E+03	.1320E+03	.0000E+00
GLoads	35	-.2417E+02	.3233E+03	-.2639E+01	.2159E+03	-.1547E+03	.0000E+00
GLoads	51	.2433E+02	-.2669E+03	-.9177E+01	.3234E+03	-.2502E+03	.0000E+00

```
KAISER ENGINEERS HANFORD  S/N:801854                                  02/22/95
PAGE  177                 Run ID=MN61973                              08:51:23
              ============== I M A G E S  3 D ==============
              = Copyright (c) 1984   Celestial Software Inc. =
              ================================================

           SOLVE PLATE LOADS/STRESSES   Version 2.0  07/01/90

      L

Load Case  5:UBC SEISMIC LOAD - NS & WE

GLoads Node     Fx          Fy          Fz          Mx          My          Mz
------ ---- ---------- ---------- ---------- ---------- ---------- ----------
GLoads  128  .2699E+02 -.3540E+03 -.3214E+01  .3731E+03  .3654E+02  .0000E+00
                                 ***PLATE   94***
GLoads  128  .4101E+01  .2854E+03 -.2530E+02 -.5825E+03  .8852E+02  .0000E+00
GLoads   51  .1133E+01  .2485E+03 -.1766E+02 -.3987E+03 -.1570E+03  .0000E+00
GLoads   67 -.1579E+02 -.2543E+03  .1741E+02  .9456E+02 -.6942E+02  .0000E+00
GLoads  130  .1056E+02 -.2797E+03  .2556E+02 -.5859E+02  .1328E+03  .0000E+00
                                 ***PLATE   95***
GLoads  130  .2646E+02  .2272E+03 -.6119E+02 -.9562E+03 -.1669E+02  .0000E+00
GLoads   67  .3466E+02  .1367E+03 -.6237E+02 -.9784E+03 -.5909E+02  .0000E+00
GLoads   83 -.2634E+02 -.2207E+03  .4484E+02 -.7576E+03 -.1069E+03  .0000E+00
GLoads  132 -.3478E+02 -.1432E+03  .7873E+02 -.7060E+03 -.1681E+03  .0000E+00
                                 ***PLATE   96***
GLoads  132  .6577E+02  .1239E+03 -.1127E+03 -.5292E+03  .1811E+03  .0000E+00
GLoads   83  .4027E+02  .9524E+02 -.6275E+02 -.7349E+03  .3655E+03  .0000E+00
GLoads   99 -.9904E+02 -.1827E+03  .1815E+03 -.9544E+03  .1011E+04  .0000E+00
GLoads  134 -.6996E+01 -.3641E+02 -.6006E+01 -.6771E+03  .8177E+03  .0000E+00
                                 ***PLATE   97***
GLoads   17 -.2362E+02  .4184E+03  .7360E+02  .6617E+03  .1187E+03  .0000E+00
GLoads  123 -.3363E+03  .9012E+03  .8569E+02  .8791E+03  .7859E+02  .0000E+00
GLoads  125  .8499E+02 -.5053E+03 -.7606E+02  .1082E+04  .4089E+01  .0000E+00
GLoads   34  .2750E+03 -.8143E+03 -.8322E+02  .8815E+03 -.8830E+01  .0000E+00
                                 ***PLATE   98***
GLoads   34 -.8321E+02  .3789E+03  .2288E+02  .4555E+02  .1590E+03  .0000E+00
GLoads  125 -.5992E+02  .5313E+03  .4670E+02  .2116E+03  .1239E+03  .0000E+00
GLoads  127  .6093E+02 -.3739E+03 -.2731E+02  .7013E+03  .5311E+02  .0000E+00
GLoads   50  .8220E+02 -.5364E+03 -.4227E+02  .5723E+03  .5180E+02  .0000E+00
                                 ***PLATE   99***
GLoads   50 -.4511E+02  .2874E+03 -.2973E+02 -.4246E+03  .1817E+03  .0000E+00
GLoads  127 -.2708E+02  .3464E+03 -.9438E+00 -.4657E+03  .2063E+03  .0000E+00
GLoads  129  .4142E+02 -.2670E+03  .4632E+02  .6302E+02  .2879E+03  .0000E+00
GLoads   66  .3077E+02 -.3668E+03 -.1565E+02  .1524E+03  .2316E+03  .0000E+00
                                 ***PLATE  100***
GLoads   66 -.4021E+01  .2232E+03 -.7123E+02 -.7572E+03  .1205E+02  .0000E+00
GLoads  129 -.1120E+02  .2196E+03 -.7341E+02 -.1159E+04  .1796E+03  .0000E+00
GLoads  131 -.3275E+02 -.2028E+03  .8131E+02 -.8839E+03  .8341E+02  .0000E+00
GLoads   82  .4797E+02 -.2399E+03  .6333E+02 -.3825E+03 -.1171E+03  .0000E+00
                                 ***PLATE  101***
GLoads   82  .1218E+02  .2066E+03 -.8905E+02 -.1886E+04 -.9116E+03  .0000E+00
GLoads  131  .6950E+02  .1057E+03 -.1242E+03 -.7623E+03 -.4239E+03  .0000E+00
GLoads  133  .8598E+02 -.2180E+03 -.3297E+02 -.9727E+03 -.6880E+03  .0000E+00
GLoads   98 -.1677E+03 -.9426E+02  .2462E+03 -.2243E+04 -.1119E+04  .0000E+00
                                 ***PLATE  102***
GLoads   98 -.1655E+03  .6165E+01  .2303E+03  .1774E+04 -.3544E+03  .0000E+00
```

```
KAISER ENGINEERS HANFORD  S/N:801854                                  02/22/95
PAGE  178                 Run ID=MN61973                              08:51:23
              ============== I M A G E S  3 D ==============
              = Copyright (c) 1984   Celestial Software Inc. =
              ================================================

           SOLVE PLATE LOADS/STRESSES   Version 2.0  07/01/90

      L

Load Case  5:UBC SEISMIC LOAD - NS & WE

GLoads Node     Fx          Fy          Fz          Mx          My          Mz
------ ---- ---------- ---------- ---------- ---------- ---------- ----------
GLoads  133 -.5676E+02  .1757E+03  .1132E+02  .5335E+03 -.1293E+03  .0000E+00
GLoads  135  .6877E+02  .7663E+01 -.2861E+02  .2530E+03  .1573E+03  .0000E+00
GLoads  114  .1535E+03 -.1895E+03 -.2130E+03  .1426E+04 -.1957E+02  .0000E+00
```

KAISER ENGINEERS HANFORD S/N:801854 02/22/95
PAGE 179 Run ID=MN61973 08:51:24

```
============== I M A G E S  3 D ==============
= Copyright (c) 1984   Celestial Software Inc. =
===============================================
```

SOLVE PLATE LOADS/STRESSES Version 2.0 07/01/90

L

Load Case 5:UBC SEISMIC LOAD - NS & WE

MAXIMUM STRESS SUMMARY FOR PLATES
WITHIN SPECIFIED RANGE 1- 102

Maximum (absolute) Stress = .3094E+03 at Plate 36

Plate	Sigma X	Sigma Y	Tau XY	Von Mises
36	-.3094E+03	-.2130E+03	.2512E+02	.2776E+03

KAISER ENGINEERS HANFORD S/N:801854 02/22/95
PAGE 180 Run ID=MN61973 08:51:24

```
============== I M A G E S  3 D ==============
= Copyright (c) 1984   Celestial Software Inc. =
===============================================
```

SOLVE REACTIONS Version 2.0 07/01/90

L

Load Case 5:UBC SEISMIC LOAD - NS & WE

REACTIONS

Node	Fx	Fy	Fz	Mx	My	Mz
1	-.1949E+02	-.6938E+02	.8238E+02	.0000E+00	.0000E+00	.0000E+00
2	-.2009E+03	.6220E+03	.1048E+03	.0000E+00	.8560E+03	.5257E+02
3	-.2393E+03	.4064E+03	.3460E+02	.0000E+00	.2115E+03	.0000E+00
4	-.2797E+03	.3480E+03	.1603E+02	.0000E+00	.2839E+03	.0000E+00
5	-.1982E+03	.4361E+03	.1142E+03	.2149E+03	.2134E+04	.2504E+03
6	-.2308E+02	.4140E+03	.3150E+03	.0000E+00	.3151E+03	.0000E+00
7	-.4735E+02	.4689E+03	.3463E+03	.0000E+00	.1856E+03	.0000E+00
8	-.4465E+02	.5045E+03	.3736E+03	.0000E+00	-.9475E+01	.0000E+00
9	-.4500E+02	.5319E+03	.4017E+03	.0000E+00	-.2019E+03	.0000E+00
10	-.1951E+02	.5961E+03	.4164E+03	.0000E+00	-.3091E+03	.0000E+00
11	-.3482E+02	.1084E+04	.3386E+03	.5231E+03	-.4540E+04	.3740E+03
12	-.2304E+03	.6791E+03	.1459E+02	.0000E+00	-.3580E+03	.0000E+00
13	-.2420E+03	.6773E+03	.4310E+02	.0000E+00	-.3037E+03	.0000E+00
14	-.2587E+03	.7019E+03	.4540E+02	.0000E+00	-.1607E+03	.0000E+00
15	-.2716E+03	.7329E+03	.5201E+02	.0000E+00	-.6314E+01	.0000E+00
16	-.2853E+03	.7772E+03	.3715E+02	.0000E+00	.9761E+02	.0000E+00
17	-.3358E+03	.1256E+04	.1444E+03	.0000E+00	.8521E+03	.7638E+02
18	-.2179E+02	.1337E+02	.9071E+01	.0000E+00	.0000E+00	.0000E+00
115	-.7963E+04	.0000E+00	.8068E+04	.0000E+00	.0000E+00	.0000E+00
116	-.1823E+04	.7963E+04	.7799E+03	.0000E+00	.0000E+00	.0000E+00
117	-.7804E+03	.1041E+05	.3615E+04	.0000E+00	.0000E+00	.0000E+00
118	-.3616E+04	.1041E+05	.7810E+03	.0000E+00	.0000E+00	.0000E+00
119	-.7816E+03	.7964E+04	.1822E+04	.0000E+00	.0000E+00	.0000E+00
122	-.4928E+02	.3016E+03	.1060E+03	.0000E+00	.6046E+03	.3947E+02
123	-.3574E+03	.1215E+04	.1060E+03	.0000E+00	.4628E+03	.9910E+02

W320-24-020

Intake Air Filter Pad and
Cooling Coil Support Frame Analysis

KAISER ENGINEERS HANFORD	CALCULATION IDENTIFICATION AND INDEX	Page i of iii Date 9-2-94

This sheet shows the status and description of the attached Design Analysis sheets.

Discipline Structural WO/Job No. ER4319/W-320 Calculation No. W320-24-020

Project No. & Name Project W-320, Tank 241-C-106 Sluicing

Calculation Item INTAKE AIR FILTER PAD AND COOLING COIL SUPPORT FRAME ANALYSIS

These calculations apply to:

Dwg. No. H-2-818458 sh. 3 Rev. No. 0

Dwg. No. H-2-818473 sh. 1 Rev. No. 0

Other (Study, CDR) N/A Rev. No. NA

The status of these calculations is:

[] Preliminary Calculations

[X] Final Calculations

[] Check Calculations (On Calculation Dated)

[] Void Calculation (Reason Voided)

Incorporated in Final Drawings? [X] Yes [] No

This calculation verified by independent "check" calculations? [] Yes [X] No

Original and Revised Calculation Approvals:

	Rev. 0 Signature/Date	Rev. 1 Signature/Date	Rev. 2 Signature/Date
Originator	James R. Booth 3-16-95	5/30/96	
Checked by	L.W. Fuch 3/17/95	G.J. Mayer 6/12/96	
Approved by	5/18/95	6/13/96	
Checked Against Approved Vendor Data		4/7/98	

INDEX

Design Analysis Page No.	Description
1-2	Objective, Criteria, Data, Assumptions, Method, References, and Conclusion.
3-10	Calculations
Attach. A	Sketches and Vendor Data
Attach. B	Tables for Equal Single Angles in Compression

REV 1: Revised Page 2 & 9 & Attach A-4, A-5.

CALCULATION CROSS INDEX (Typical)

Subject Calculation No. W320-24-020

Subject Calculation Revision No.	Superceded by Calculation No.	These interfacing calculation/documents provide input to the subject calculation, and if revised may require revision of the subject calculation.		Results and conclusions of the subject calculation are used in these interfacing calculations and/or documents.		Does the output interface calculation/ documents require revision?		Has the output interface calculation/ documents been revised?		Discipline manager's signature and date indicating evaluation complete.
		Calculation/Document No.	Revision No.	Calculation/Document No.	Revision No.	Yes	No	Yes	No	
Ø	N/A	N/A	—	H-2-818458 sh.3	Ø		✓		✓	5/18/95
Ø	N/A	N/A	—	H-2-818475 sh.2	Ø		✓		✓	

HNF-2467, Rev.0

DESIGN VERIFICATION SCREENING CRITERIA

Project/Document No. W-320/W320-24-020

When the design or design change affects hardware, formal design verification must be performed if one or more of the following questions must be answered affirmatively (YES).

YES	NO	
	✓	1. Does the design or design change involved meet the established criteria to be considered Safety Class 1 or 2?
	✓	2. Does this design or design change cause or permit changes to Safety Class 1 or 2 instrument or alarm setpoints outside of previously approved operational limits?
	✓	3. Does this design or design change significantly affect the nuclear safety consequences of a malfunction or failure of the structure, system, or component?
	✓	4. Does this design or design change involve or change design that has previously undergone formal design verification?

Assigned Lead Engineer — Date: 5/18/95

Responsible Discipline Manager — Date: 5/18/95

Original Design Package Distribution:

- Project Manager
- Design Verification Officer
- Engineering Document Control

Design Change Distribution:

- Attach to Engineering Change Notice

KEH-1981.00 (06/91)

KAISER ENGINEERS HANFORD

Calc. No. W320-24-020
Revision 0
Page No. 1 of 10

DESIGN ANALYSIS

Client WHC
WO/Job No. ER4319/W-320
Subject Intake Air Filter Pad and Cooling Coil Support Frame Analysis
Date 9-2-94 By J.R. Booth JRB
Checked 3/17/95 By J.W. Funk
Location C-Farm, Tank 241-C-106
Revised By

OBJECTIVE: The objective of this calculation is to design a SC3 structural concrete pad and analyze the expansion anchor bolt requirements to support and secure the Intake Air Filter and Cooling Coil located at riser 15 of C-106. Additionally, this calculation will size the support frame members required to support the Cooling Coil.

CRITERIA:

1. SDC 4.1, Rev. 11.
2. UCRL 15910, June 1990.
3. DOE order 6430.1a
4. Functional Design Criteria (FDC) for Tank 241-C-106 Waste Retrieval, Project W-320, DOC. NO. WHC-SD-W320-FDC-001, REV.2.

DATA:

1. f'c=4000 psi
2. fy=60 ksi for rebar
3. 3/8" dia. expansion anchor bolts with 1 5/8" minimum embedment.
4. A-36 Structural Steel.

ASSUMPTIONS: See body of calc.

METHOD: MATHCAD 4.0

REFERENCES:

1. American Concrete Institute (ACI). ACI 318-89 (Revised 1992).
2. American Concrete Institute (ACI). ACI SP-17(91).
3. American Society of Civil Engineers (ASCE). ASCE 7-88.
4. Standard Arch-Civil Design Criteria, SDC-4.1.Design Loads for Facilities. Rev. 11.
5. International Conference of Building Officials (ICBO). Report No. 4627. March 1989.
6. Uniform Building Code (UBC-91).
7. Design and Evaluation Guidelines for Department of Energy Facilities Subjected to Natural Phenomena Hazards. UCRL 15910, June 1990.
8. American Institute of Steel Construction (AISC). Manual of Steel Construction, Allowable Stress Design. 9th Edition.

KAISER ENGINEERS
HANFORD

Calc. No. W320-24-020
Revision ~~0~~ 1
Page No. 2 of 10

DESIGN ANALYSIS

Client WHC
Subject Intake Air Filter Pad and Cooling Coil Support Frame Analysis
Location C-Farm, Tank 241-C-106

WO/Job No. ER4319/W-320
Date 9-2-94 By J.R. Booth JRB
Checked 3/17/95 By J.K. Fuel
Revised 5/30/96 By [signature]

CONCLUSION:

Intake Air Filter pad & anchorage for cooling coil frame are adequate as detailed on Dwg H-2-818458, SH 3 and as modified by ECN's W-320-288, 351. For frame support details see Dwg H-2-818473, SH 1 (PS-205) and modifications provided in ECN W-320-225.

1
WJM
6/12/96

KAISER ENGINEERS
HANFORD

DESIGN ANALYSIS

Calc. No. W320-24-020
Revision 0
Page No. 3 of 10

Client: Westinghouse Hanford Company	WO/Job No. ER4319/W-320	
Subject: Intake Air Filter Pad and Cooling Coil	Date 9/2/94	By JR Booth JRB
Support Frame Analysis	Checked 3/17/95	By J.W. Fink
Location: C-Farm, Tank 241-C-106	Revised	By

SEE H-2-95451 SH. 5 FOR DETAIL IV OF AIR INTAKE FILTER

Determine Design Loads:

1. Snow (REF. ASCE 7-88, pg. 23-27)

$C_e := 0.9$

$C_t := 1.1$

$I := 1.2$

$p_g := 15 \cdot \frac{lb}{ft^2}$ Ref. SDC 4.1

$p_f := 0.7 \cdot C_e \cdot C_t \cdot I \cdot p_g$

$p_f = 12.474 \cdot \frac{lb}{ft^2}$ Use $p_f := 20 \cdot \frac{lb}{ft^2}$ (Minimum Snow Load per SDC 4.1)

$S := p_f (9 \cdot ft \cdot 9 \cdot ft)$ Include as Live Load to be conservative

$S = 1.62 \cdot 10^3 \cdot lb$

2. Wind: (Ref. SDC 4.1 and ASCE 7-88, section 6)
Dimensions: 9'-0" X 9'-0" X 6'-0" high, envelope dimensions (See H-2-95451, sh.5)
Exposure Class=C (SDC 4.1, pg.13)
Wind Speed=70 mph (SDC 4.1, pg.13)
Importance Factor=1.07 (SDC 4.1, pg.13)

$I := 1.07$

$V := 70$

$K_z := 0.80$ (Table 6 of ASCE 7-88)

$q_z := 0.00256 \cdot K_z \cdot (I \cdot V)^2 \cdot \frac{lb}{ft^2}$ (Velocity pressure, Eq.3 of ASCE 7-88)

$q_z = 11.489 \cdot \frac{lb}{ft^2}$

$G_h := 1.32$ (Gust response factor, Table 8 of ASCE 7-88)

$C_f := 1.2$ (Force Coeff. for Solid Signs, Table 13 of ASCE 7-88)

$A_f := 9 \cdot ft \cdot 6 \cdot ft$ (Projected area normal to wind in sq. ft)

$W := q_z \cdot G_h \cdot C_f A_f$ (Design Wind Force from Table 4, ASCE 7-88)

$W = 982.749 \cdot lb$

Note: Wind force acting on filter will be the same in both the N-S and E-W directions.

3. Live Floor Load. Use snow load.

$L := S$

$L = 1.62 \cdot 10^3 \cdot lb$

KAISER ENGINEERS
HANFORD

DESIGN ANALYSIS

Calc. No. W320-24-020
Revision 0
Page No. 4 of 10

Client: Westinghouse Hanford Company	WO/Job No. ER4319/W-320	
Subject: Intake Air Filter Pad and Cooling Coil Support Frame	Date 9/2/94	By JR Booth JRB
	Checked 3/17/95	By J. W. Fitzl
Location: C-Farm, Tank 241-C-106	Revised	By

4. Dead Loads: See H-2-95451 sh. 5, Detail IV and Section A-A of sh. 4.

Intake Ductwork

$$D_1 := (((5\cdot ft\cdot 8\cdot ft) + (5\cdot ft\cdot 2.17\cdot ft))\cdot 2 + (2.17\cdot ft\cdot 8\cdot ft))\cdot 2.66\cdot \frac{lb}{ft^2}$$

$$D_1 = 316.7\cdot lb$$

Transition Piece

$$D_2 := 2\cdot(2\cdot ft\cdot 8\cdot ft + 2\cdot ft\cdot 2\cdot ft)\cdot 3.28\cdot \frac{lb}{ft^2}$$

$$D_2 = 131.2\cdot lb$$

Round Duct (Estimated Weight)

$$D_3 := 4\cdot ft\cdot 9.6\cdot \frac{lb}{ft} + 10\cdot lb$$

Add 10 lb for Damper

$$D_3 = 48.4\cdot lb$$

Pre-Filter and Filter Housing Weight from vendor data and P. Langowski, see page A-3.

$$D_4 := 600\cdot lb$$

Angle Support Frame

$$L_1 := (2\cdot 3.25\cdot ft + 4\cdot 3\cdot ft + 8.4\cdot ft + 3.4\cdot ft + 2\cdot 3.53\cdot ft)\cdot 4.9\cdot \frac{lb}{ft}$$

$$L_2 := (3\cdot 8\cdot ft + 2\cdot 3\cdot ft)\cdot 6.6\cdot \frac{lb}{ft}$$

$$L_3 := (2\cdot 15.8\cdot ft)\cdot 2.75\cdot \frac{lb}{ft}$$

$$L_4 := (4\cdot 15.8\cdot ft)\cdot 1.863\cdot \frac{lb}{ft}$$

$$D_5 := L_1 + L_2 + L_3 + L_4$$

$$D_5 = 585.706\cdot lb$$

Steel Plates (1/4" Steel Plate)

$$D_6 := 6\cdot 0.34\cdot ft^2\cdot 10.21\cdot \frac{lb}{ft^2}$$

$$D_6 = 20.828\cdot lb$$

Weight of Cooling Coil

$$D_{cc} := 1500\cdot lb$$

(Vendor provided wet weight, see pg. A-1)

Total estimated weight of Air Inlet Filter & Cooling Coil

$$D := D_1 + D_2 + D_3 + D_4 + D_5 + D_6 + D_{cc}$$

$$D = 3.203\cdot 10^3\cdot lb$$

KAISER ENGINEERS
HANFORD

DESIGN ANALYSIS

Calc. No. W320-24-020
Revision 0
Page No. 5 of 10

Client: Westinghouse Hanford Company
Subject Intake Air Filter Pad and Cooling Coil Support Frame Analysis
Location: C-Farm, Tank 241-C-106

WO/Job No. ER4319/W-320
Date 9/2/94 By JR Booth
Checked 3/17/95 By
Revised By

5. Seismic: Ref. SDC 4.1, UCRL 15910, and UBC-91.

Ground motion shall be taken 100% in one perpendicular direction plus 30% in the other direction combined in a SRSS basis.

Critical Damping = 5% for Safety class 3 per SDC 4.1.

$Z := 0.2$ — Peak Ground Acceleration (UBC 91, Zone 2b)

$I := 1.25$ — Importance Factor (SDC 4.1)

$C_p := 2 \cdot (0.75)$ — Horizontal Force Factor (UBC 91, Table No. 23-P). Factor multiplied by 2 per UBC sec. 2336(b).

$W_p := D$ — Weight of filter acting on foundations.

$F_p := Z \cdot I \cdot C_p \cdot W_p$ — Lateral Force per UBC sec.2336(b).

$F_p = 1.201 \cdot 10^3 \cdot lbf$

$F_{p2} := 0.3 \cdot F_p$

$F_{p2} = 360.319 \cdot lb$

$E := \sqrt{F_p^2 + F_{p2}^2}$

$E = 1.254 \cdot 10^3 \cdot lb$

6. Load Combinations

a. UBC 91 load combinations, sec. 2609(c) and sec. 2625(c)4. The zero loads below are to make the MathCAD equations work.

$W_v := 0 \cdot lb$

$E_v := 0 \cdot lb$

1. $U_1 := 1.4 \cdot D + 1.7 \cdot L$

   $U_1 = 7.238 \cdot 10^3 \cdot lb$ — Controlling Load Case

2. $U_2 := 0.75 \cdot (1.4 \cdot D + 1.7 \cdot L + 1.7 \cdot W_v)$

   $U_2 = 5.428 \cdot 10^3 \cdot lb$

3. $U_3 := 0.9 \cdot D + 1.3 \cdot W_v$

   $U_3 = 2.883 \cdot 10^3 \cdot lb$

4. $U_4 := 0.75 \cdot (1.4 \cdot D + 1.7 \cdot L + 1.87 \cdot E_v)$

   $U_4 = 5.428 \cdot 10^3 \cdot lb$

5. $U_5 := 0.9 \cdot D + 1.43 \cdot E_v$

   $U_5 = 2.883 \cdot 10^3 \cdot lb$

6. $U_6 := 1.4 \cdot (D + L + E_v)$

   $U_6 = 6.752 \cdot 10^3 \cdot lb$

KAISER ENGINEERS
HANFORD

DESIGN ANALYSIS

Calc. No. W320-24-020
Revision 0
Page No. 6 of 10

Client: Westinghouse Hanford Company
Subject: Intake Air Filter Pad and Cooling Coil Support Frame Analysis
Location: C-Farm, Tank 241-C-106

WO/Job No. ER4319/W-320
Date 9/2/94 By JR Boeth
Checked 5/18/95 By
Revised By

7. $U_7 := 0.9 \cdot D + 1.4 \cdot E_v$

$U_7 = 2.883 \cdot 10^3 \cdot lb$

7. Check Soil Loading.

$q_a := 2000 \cdot \frac{lb}{ft^2}$ UBC-91, Table No. 29-B

$D_c := 150 \cdot \frac{lb}{ft^3} \cdot (9 \cdot ft \cdot 9 \cdot ft \cdot 0.5 \cdot ft)$ Weight of 9'-0" x 9'-0" x 0'-6" THK Concrete Pad

$D_c = 6.075 \cdot 10^3 \cdot lb$

$D_t := D + D_c$ Total Dead Load on Soil

$D_t = 9.278 \cdot 10^3 \cdot lb$

$q_{applied} := \frac{D_t}{9 \cdot ft \cdot 9 \cdot ft}$

$q_{applied} = 114.541 \cdot \frac{lb}{ft^2}$ Soil loading not a concern

8. Check overturning.

$M_{ot} := E \cdot (4.71 \cdot ft)$ Conservative. See page A1.

$M_{ot} = 5.906 \cdot 10^3 \cdot lb \cdot ft$

$M_r := D_t \cdot (3.79 \cdot ft)$ See page A5.

$M_r = 3.516 \cdot 10^4 \cdot lb \cdot ft$

$\frac{M_{ot}}{M_r} = 0.168$ Resistance to overturning OK.

9. Determine factored upward soil pressure.

$q_u := 1.7 \cdot q_a \cdot 1 \cdot ft$ Conservative

$q_u = 3.4 \cdot 10^3 \cdot \frac{lb}{ft}$ Net factored upward pressure per lineal foot

KAISER ENGINEERS
HANFORD

DESIGN ANALYSIS

Calc. No. W320-24-020
Revision 0
Page No. 7 of 10

Client: Westinghouse Hanford Company	WO/Job No. ER4319/W-320	
Subject Intake Air Filter Pad and Cooling Coil	Date 9/2/94	By JR Booth
Support Frame Analysis	Checked 5/18/95	By
Location: C-Farm, Tank 241-C-106	Revised	By

10. Determine Flexural Steel Requirements. Assume the distance from the outside edge of slab to the HVAC support will act as a cantilever beam. See page A-5.

$l := 1 \cdot ft$

$$M_u := \frac{\frac{q_u \cdot l^2}{2}}{1000 \cdot lb \cdot 1 \cdot ft}$$

$M_u = 1.7$ ft - kips

Using the design proceedures of ACI SP-17(91), Vol. 1, pg.29.

$f_c := 4000$ psi $\quad f_y := 60000$ psi

$b := 12$ Width of beam

$h := 6$

$d := h - 3 - 0.25$ Effective depth. Try #4 bars

$d = 2.75$

$F := \frac{d^2}{1000}$ $\quad F = 0.008$

$K_n := \frac{M_u}{F}$ $\quad K_n = 224.793$

$a_n := 4.31$

$$A_s := \left(\frac{M_u}{d \cdot a_n}\right) \cdot in^2$$

$A_s = 0.143 \cdot in^2$ Area of steel required, sq. in/ft. CONTROLS.

$\rho_{min} := 0.0018$ For grade 60 steel, per Ref. 1, sec. 7.12.2.1

$A_{smin} := \rho_{min} \cdot b \cdot h$

$A_{smin} = 0.13 \ in^2$

$S_{max} \le 18 \cdot in$ Max spacing per Ref. 1, sec. 7.12.2.2.

$$S := 0.2 \cdot in^2 \cdot \left(\frac{12}{A_s}\right)$$

$S = 16.733$

KAISER ENGINEERS
HANFORD

DESIGN ANALYSIS

Calc. No. W320-24-020
Revision 0
Page No. 8 of 10

Client: Westinghouse Hanford Company
Subject: Intake Air Filter Pad and Cooling Coil
Support Frame Analysis
Location: C-Farm, Tank 241-C-106

WO/Job No. ER4319/W-320
Date 9/2/94 By JR Booth
Checked 3/17/95 By
Revised By

Check Flexural Shear

$V_u := q_u \cdot l$

$V_u = 3.4 \cdot 10^3 \cdot lb$

$b_w := 12 \text{ in} \qquad \phi := 0.85$

$V_c := \phi \cdot \left(2 \cdot \sqrt{f_c}\right) \cdot b_w \cdot d$

$V_c = 3.548 \cdot 10^3 \text{ lb}$ Ok

Check Punching Shear

$V_u := \frac{U_1}{4}$ Conservative

$V_u = 1.809 \cdot 10^3 \cdot lb$

$b_o := 4 \cdot \left(7 + \frac{d}{2}\right)$

$b_o = 33.5$

$V_c := \phi \cdot 4 \cdot \sqrt{4000} \cdot b_o \cdot d$

$V_c = 1.981 \cdot 10^4 \text{ lb}$ OK

Provide #4 bars @ 12" O/C E.W.

10. Expansion Anchor Design: Check expansion anchors for seismic load perpendicular to cooling coil frame. Due to fit-up problems in field, the seismic loading is assumed to be resisted by only (2) expansion anchors in each baseplate.

Shear per bolt = E/(4 legs) * 2 bolts per plate
= 1254 lbs /8 = 157 lbs per exp anchor

Torsional shear = 157 lbs * 2 (3.25"/ (6.5")
= 157 lbs

Resultant shear per bolt = $\sqrt{(157^2 + 157^2)}$
= 222 lbs

Uplift = E(4.71')/ 2(3.58')2 - D(.85)/4(2)
= 1254 lbs (4.71')/(3.58')4 - 3203 lbs (.85)/8
= 72 lbs uplift per bolt

Tension due to prying action = 72 lbs * 3.25"/say 1"
= 234 lbs per bolt

Total tension per bolt = 72 lbs + 234 lbs = 306 lbs

Try: 3/8" dia exp anchors w/ 1-5/8" min emb

Shear allow = 710 lbs
Tension allow = 875 lbs

IF = 222/710 + 306/875 = .66 < 1.0 OK

1 WJH 6/12

11. Check L 3 x 3 x 3/8" angles for use on Cooling Coil Support Frame. See page A-4.

Assumptions
1. The support frame for the Air Inlet Filter will resist the seismic force in the direction parallel to the ducting.
2. The dimensions shown are approximate and are intended to envelope the dimensions of the actual support frame.

a. Check angle for bending. Assume simply supported beam with concentrated load at center. See page A-4, Section A.

$kip := 1000 \cdot lb$ $\quad ksi := \frac{1000 \cdot lb}{in^2}$ $\quad D_A := D_1 + D_2 + D_3 + D_{cc}$

$P := \frac{D_A}{2} + \left(20 \cdot \frac{lb}{ft^2}\right) \cdot 2 \cdot ft \cdot 4.5 \cdot ft$ Point load acting on angle

$P = 1.178 \cdot kip$

$L := 54 \cdot in$ Angle length

$M := \frac{P \cdot L}{4}$

$M = 15.905 \cdot kip \cdot in$

KAISER ENGINEERS
HANFORD

DESIGN ANALYSIS

Calc. No. W320-24-020
Revision 0
Page No. 10 of 10

Client: Westinghouse Hanford Company
Subject: Intake Air Filter Pad and Cooling Coil Support Frame Analysis
Location: C-Farm, Tank 241-C-106

WO/Job No. ER4319/W-320
Date 9/2/94 By JR Booth
Checked 3/17/95 By
Revised By

Use method on Ref. 8, pg. 5-311 section 5.1.1. Assume lateral-torsion restraint along length.

$F_y := 36 \cdot ksi$

Try: $F_b := 0.66 \cdot F_y$ $\quad F_b = 23.76 \cdot ksi$

$S := \frac{M}{F_b}$

$S = 0.669 \cdot in^3$ — Minimum required section modulus

$S_y := 0.833 \cdot in^3$ — Section modulus of L 3 x 3 x 3/8

$b := 3.0 \cdot in \quad t := \frac{3}{8} \cdot in$

$\frac{b}{t} = 8$

$\frac{b}{t} \le \frac{65}{\sqrt{F_y}}$

$\frac{65}{\sqrt{36}} = 10.833$

Therefore, assumption for allowable bending stress is good.

$f_b := \frac{M}{S_y} \quad f_b = 19.094 \cdot ksi$ — **OK**

b. Check angle under compression. See attachmet B.

$KL := 3.5 \cdot ft$ — Assume simply supported attachments, conservative.

$P_a := 10.3 \cdot kip$ — Allowable Axial Load for L 3 x 3 x 3/8 angles.

Since the allowable axial load far exceeds the weight of the Cooling Coil compression will not be a problem.

c. Determine allowable tensile load for L 3 x 3 x 3/8 angles.

$A_e := 0.88 \cdot in^2$ — Area of one leg of angle connected to support per Ref. 8, pg.5-310 section 2.c.

$F_u := 58 \cdot ksi$

$P_{at} := 0.5 \cdot F_u \cdot A_e$ — Ref. 8, pg. 5-310 section 2.

$P_{at} = 25.52 \cdot kip$ — By inspection it can be seen that tensile force in the diagonal member will be far less than the allowable.

12. Design weld adequate to support any load of this design:

$R_w := \frac{1}{4} \cdot in \cdot (0.707 \cdot 0.3 \cdot 70 \cdot ksi)$

$R_w = 3.712 \cdot \frac{kip}{in}$ — Welding along one leg of angle (MIN) will be suffient to support any load in this design.

7/95 FRI 13:54 FAX 6129204650 SUPER RADIATOR COILS TLR 11/MO580 W320-24-020 Page A-1 of A-5 001 001

Transmittal Memo 7672

Jim St. Martin

To Peter Langowski

No. of Pages 1 Today's Date 1-19-95 Time

Company

Location Dept. Charge

Telephone # Fax # Telephone #

Original Disposition: Destroy Return Call for pickup

Jim, thanks for your prompt reply. It looks good. Please verify/provide the following (at your leisure).

- That the 30×48-12R-58/168 is 12 fpi? I couldn't remember what the last number means in the model number.

- what is the dry and water-filled weight of the coil & casing?

Peter Langowski

APPROX. WEIGHTS

DRY 1,350 LBS

WET 1,500 LBS

SINCERELY,

Jim St. Martin

1-27-95

ICF KAISER HANFORD

Calc. No. W320-24-020
Revision: 0
Page No. A2 of A5

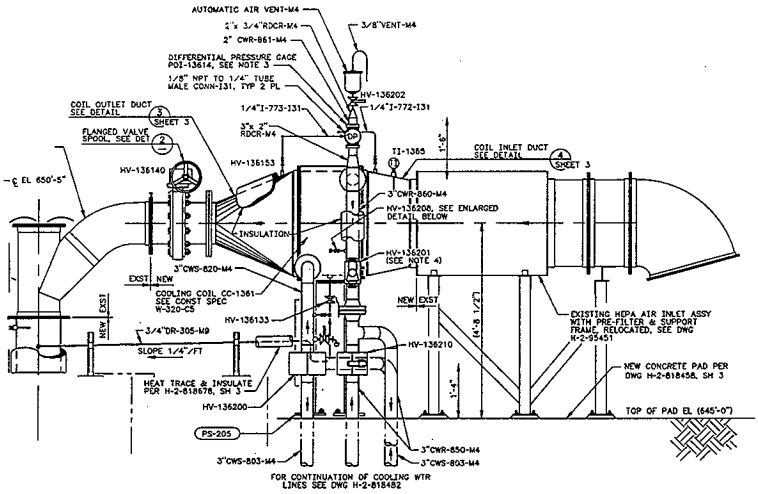

SECTION B OF H-2-818470, SH-2

KAISER ENGINEERS
HANFORD

Calc. No. W320-24-020
Page No. A-3 of A-5
Revision 0

DESIGN ANALYSIS

Client WHC	WO/Job No. ER4319/W-320		
Subject Intake Air Filter Foundation	Date	By JR Booth	
	Checked	By	
Location C-Farm	Revised	By	

Telecon with Air Commodities 1-206-766-4815

Bob Roy

1×3 Flanders E6-GG-F6
approximate weight: 600 lbs. max.

by Peter H Langowski 9-1-94

ICF KAISER HANFORD

Calc. No. W320-24-020
Revision: Ø 1
Page No. A4 of A5

ICF KAISER HANFORD COMPANY				ENGINEERING CHANGE NOTICE SKETCH		
Ref. Dwg.	Sh.	Rev.	Prepared By	Checked By 3/7/96	ECN No.	Page
H-2-818473	1	0	D NGUYEN	[signature]	W-320-225	3/

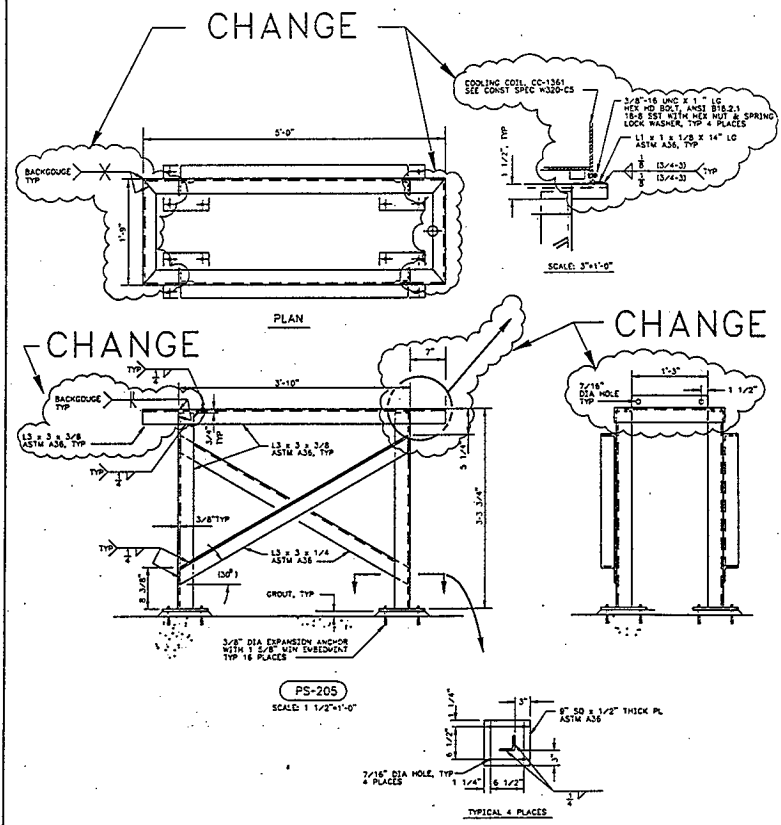

1
WJM
6/12/96

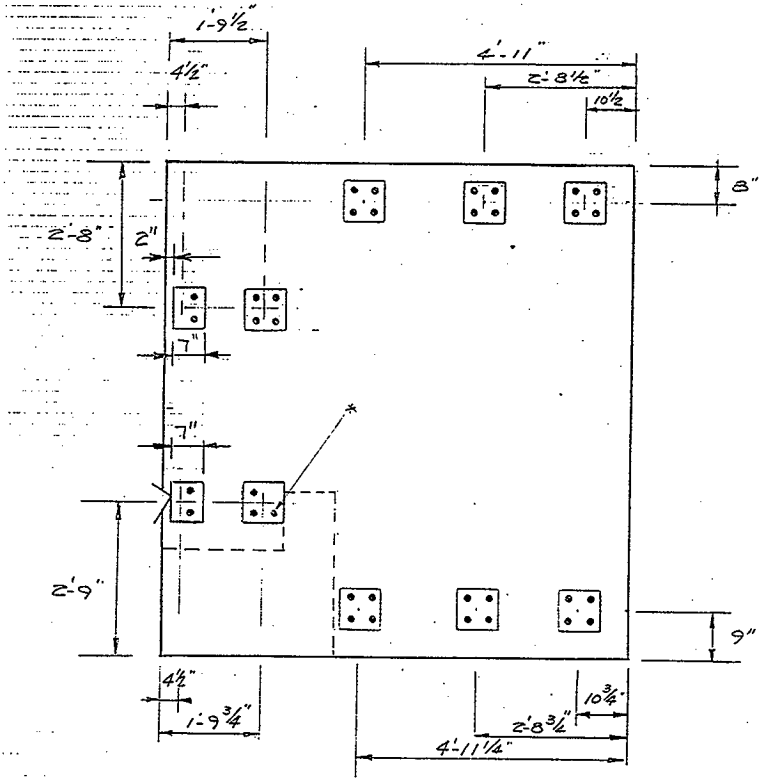

* THIS ANCHOR WILL BE SET AFTER BLOCKOUT POUR BACK

INTAKE PAD
PLAN
AS-BUILT
NTS

SS WOLD
6/3/96

WJA
6/12/

W320-24-020
Pg. B-1

Tables for Equal Single Angles in Compression

WAYNE W. WALKER

HNF-2467, Rev.0

The design of single angles in compression is a time consuming, iterative procedure. A computer program was developed to perform these time consuming calculations and generate tables for grades 36 ksi and 50 ksi equal leg angles. The program uses the recently published allowable stresses given in Reference 1.

The tables are generated using the following criteria:

1. The angle is pinned at the support points. ($K = 1.0$)
2. The common loading case where the axial load is applied on one side by a gusset plate. (See Fig. 1.)
3. No axial load is given when L/r exceeds 200.

The following example will illustrate the procedure used by the program:

Given:

Determine the maximum axial load that can be applied as shown in Fig. 1 for an L4×4×¼ grade 36 ksi with an unbraced length of 5 ft 0 in.

Angle Properties:

$A = 1.94$ in.^{2}
$I_z = 3.04$ in.^{4}
$Y = 1.09$ in.
$r_z = .795$ in.
$J = .0438$ in.^{4}
$r_w = 2.23$ in.
$H = .627$
$F_y = 36$ ksi
$E = 29{,}000$ ksi
$G = 11{,}200$ ksi
$t_g = ⅜$ in.

Solution:

Determine Q

$$\frac{b}{t} = \frac{4}{¼} = 16 \quad \frac{76}{\sqrt{F_y}} = \frac{76}{\sqrt{36}} = 12.7 \quad \frac{155}{\sqrt{F_y}} = \frac{155}{\sqrt{36}} = 25.8$$

since $12.7 < 16 < 25.8$, use $Q = 1.340 - .00447\left(\frac{b}{t}\right)\sqrt{F_y}$

$$Q = 1.340 - .00447(16)\sqrt{36} = .911$$

Determine angle properties with respect to the W and Z axes.

$$I_z = Ar_z^2 = 1.94(.795)^2 = 1.23 \text{ in.}^4$$

$$I_w = I_z + I_y - I_z = 2(3.04) - 1.23 = 4.85 \text{ in.}^4$$

$$r_w = \sqrt{\frac{I_w}{A}} = \sqrt{\frac{4.85}{1.94}} = 1.58 \text{ in.}$$

$$E_w = \frac{.7071}{2}(L_g + t_g) = \frac{.7071}{2}(4 + .375) = 1.55 \text{ in.}$$

$$E_z = y\sqrt{2} - \frac{.7071}{2}(L_g - t_g)$$

$$= 1.09\sqrt{2} - \frac{.7071}{2}(4 - .375) = .260 \text{ in.}$$

$$C_w = .7071(L_g) = .7071(4) = 2.83 \text{ in.}$$

$$C_z = y\sqrt{2} = 1.09\sqrt{2} = 1.54 \text{ in.}$$

$$S_w = \frac{I_w}{C_w} = \frac{4.85}{2.83} = 1.71 \text{ in.}^3$$

$$S_z = \frac{I_z}{C_z} = \frac{1.23}{1.54} = .799 \text{ in.}^3$$

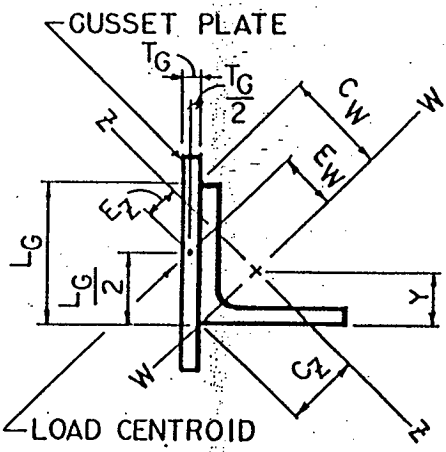

Fig. 1. Angle plan view.

Wayne W. Walker is structural engineer, Lockwood Greene Engineers, Atlanta, GA.

W320-24-020
Page B-2

Determine the Equivalent L/r for flexural-torsional buckling.

$$F_{ej} = \frac{GJ}{Ar_o^2} = \frac{11{,}200(.0438)}{1.94(2.23)^2} = 50.8 \text{ ksi}$$

$$F_{ew} = \frac{\pi^2 E}{\left(\frac{L}{r_w}\right)^2} = \frac{\pi^2(29{,}000)}{\left(\frac{5(12)}{1.58}\right)^2} = 198.5 \text{ ksi}$$

$$F_t = \frac{F_{ew} + F_{ej}}{2H}\left(1 - \sqrt{1 - \frac{4(F_{ew})(F_{ej})H}{(F_{ew} + F_{ej})^2}}\right)$$

$$F_t = \frac{198.5+50.8}{2(.627)}\left(1-\sqrt{1-\frac{4(198.5)(50.8)(.627)}{(198.5 + 50.8)^2}}\right) = 45.7 \text{ ksi}$$

$$\left(\frac{L}{r}\right)_{equiv} = \pi\sqrt{\frac{E}{F_t}} = \pi\sqrt{\frac{29{,}000}{45.7}} = 79.1$$

$$\frac{L}{r_t} = \frac{5(12)}{.795} = 75.5$$

since 79.1 > 75.5, flexural-torsional buckling controls.

Determine F_a.

$$C_c' = \sqrt{\frac{2\pi^2 E}{QF_y}} = \sqrt{\frac{2\pi^2(29{,}000)}{.911(36)}} = 132.1$$

$$\frac{L/r}{C_c'} = \frac{79.1}{132.1} = .60 \text{ using Ref. 1 Table 3} \quad C_a = .440$$

$$F_a = C_a Q F_y = .440(.911)36 = 14.4 \text{ ksi}$$

Determine F_{bw}.

$$F_{cb} = \frac{28{,}250}{\frac{L}{t}} = \frac{28{,}250}{\frac{5(12)}{.25}} = 117.7 \text{ ksi}$$

since 117.7 ksi > 36 ksi, use $F_{bw} = (0.95 - .50\sqrt{\frac{F_y}{F_{cb}}})F_y \leq .66\ F_y$

$$F_{bw} = (0.95 - .50\sqrt{\frac{36}{117.7}})36 = 24.2 \text{ ksi}$$

$$.66(36) = 23.8 \text{ ksi}$$

Check b/t provisions.

since $b/t > \frac{76}{\sqrt{F_y}}$, use $F_{bw} = .60QF_y$

$$F_{bw} = .60(.911)36 = 19.7 \text{ ksi} - \text{governs}$$

Determine F_{bt}.

since $b/t > \frac{76}{\sqrt{F_y}}$ use $F_{bt} = .60QF_y = 19.7$ ksi

Solve for the maximum allowable axial load using:

$$\frac{P}{AF_a} + \frac{PE_w}{\left(1 - \frac{P}{AF_{ew}'}\right)S_w F_{bw}} + \frac{PE_t}{\left(1 - \frac{P}{AF_{et}'}\right)S_t F_{bt}} \leq 1.0$$

$F_{ew}' = 103.4$ ksi $F_{et}' = 26.2$ ksi using Ref. 1 Table 8

$$\frac{P}{1.94(14.4)} + \frac{P(1.55)}{\left(1 - \frac{P}{1.94(103.4)}\right)1.71(19.7)} + \frac{P(.260)}{\left(1 - \frac{P}{1.94(26.2)}\right).799(19.7)} \leq 1.0$$

$P = 9.6$ kips

REFERENCES

1. American Institute of Steel Construction, *Manual of Steel Construction*, 9th ed., (Chicago: AISC, 1989).

Allowable Axial Load in Kips

L8.0×8.0

KL (ft)	Grade 36.0 ksi 1 1/8	1	7/8	3/4	5/8	9/16	1/2	Grade 50.0 ksi 1 1/8	1	7/8	3/4	5/8	9/16	1/2
1	99.9	92.0	83.7	73.8	59.2	51.7	43.9	137.7	128.6	114.8	94.7	75.8	65.3	54.4
2	99.6	91.8	83.4	73.6	59.0	51.6	43.8	137.3	128.1	114.4	94.4	75.6	65.2	54.3
3	99.2	91.3	83.1	73.2	58.9	51.4	43.6	136.4	125.3	113.7	93.8	75.2	64.9	54.1
4	98.5	90.7	82.6	72.8	58.5	51.2	43.5	135.0	124.2	112.7	93.2	74.6	64.5	53.8
5	97.3	89.9	81.9	72.3	58.1	50.9	43.2	132.9	122.7	111.5	92.2	74.0	63.9	53.4
6	95.4	88.3	81.1	71.6	57.6	50.4	42.8	129.5	119.8	109.8	91.0	73.2	63.3	52.9
7	93.4	86.4	79.2	70.7	57.0	49.9	42.5	125.6	116.2	106.6	89.6	72.1	62.5	52.3
8	91.0	84.3	77.3	69.0	56.2	49.4	42.1	121.4	112.2	102.9	86.6	71.0	61.6	51.6
9	88.5	81.9	75.1	67.1	55.2	48.7	41.6	116.7	108.0	99.1	83.6	69.2	60.5	50.9
10	85.8	79.3	72.8	65.0	53.6	47.7	41.0	111.8	103.3	94.8	80.3	66.5	59.0	50.0
11	82.9	76.6	70.3	62.8	51.8	46.3	40.2	106.6	98.4	90.2	76.5	63.7	56.6	48.8
12	79.8	73.7	67.6	60.5	49.9	44.7	38.9	101.0	93.1	85.4	72.7	60.7	54.1	46.8
13	76.6	70.7	64.9	58.0	48.0	43.0	37.5	95.0	87.6	80.3	68.5	57.4	51.4	44.5
14	73.2	67.6	62.0	55.4	45.9	41.2	36.1	88.6	81.6	74.8	64.0	54.0	48.5	42.3
15	69.6	64.2	58.8	52.7	43.6	39.3	34.5	82.4	75.8	69.1	59.4	50.3	45.3	39.7
16	65.7	60.6	55.6	49.7	41.3	37.3	32.9	76.6	70.4	63.9	55.3	46.7	42.2	37.2
17	61.8	56.9	52.2	46.6	38.9	35.2	31.1	71.4	65.3	59.2	51.5	43.6	39.4	34.6
18	58.1	53.5	48.9	43.5	36.4	33.1	29.3	66.5	60.7	55.0	47.9	40.5	36.6	32.4
19	54.6	50.2	46.0	40.7	34.2	31.1	27.5	62.0	56.5	51.2	44.6	37.7	34.2	30.3
20	51.5	47.2	43.1	38.1	32.2	29.2	25.9	57.9	52.7	47.8	41.5	35.2	31.9	28.2
21	48.5	44.5	40.5	35.8	30.2	27.5	24.5	54.2	49.3	44.6	38.8	32.8	29.8	26.4
22	45.8	42.0	38.1	33.7	28.4	25.8	23.0	50.8	46.2	41.8	36.3	30.7	27.9	24.7
23	43.2	39.5	35.8	31.6	26.7	24.3	21.6	47.6	43.3	39.1	34.0	28.8	26.1	23.1
24	40.8	37.3	33.8	29.9	25.2	22.9	20.3	44.7	40.7	36.8	32.0	27.1	24.5	21.7
25	38.6	35.3	31.9	28.2	23.7	21.6	19.2	42.1	38.4	34.6	30.1	25.4	23.0	20.3
26	36.6	33.3	30.1	26.6	22.4	20.4	18.1	39.8	36.1	32.6	28.3	23.9	21.7	19.1

L6.0×6.0

KL (ft)	Grade 36.0 ksi 1	7/8	3/4	5/8	9/16	1/2	7/16	3/8	5/16	Grade 50.0 ksi 1	7/8	3/4	5/8	9/16	1/2	7/16	3/8	5/16
1	61.3	56.2	50.5	44.4	40.6	34.7	29.9	24.2	18.2	84.7	77.5	69.5	57.0	52.1	45.5	37.9	30.0	21.8
2	61.0	55.9	50.3	44.1	40.5	34.5	29.8	24.1	18.2	84.1	77.0	69.0	56.6	51.8	45.2	37.8	29.9	21.7
3	60.3	55.5	49.9	43.7	40.1	34.3	29.6	24.0	18.1	82.9	76.0	68.2	56.1	51.3	44.8	37.5	29.7	21.6
4	59.0	54.3	49.2	43.3	39.7	33.9	29.3	23.7	17.9	80.5	74.0	67.0	55.2	50.5	44.2	37.0	29.3	21.4
5	57.5	52.9	47.8	42.5	39.1	33.4	29.0	23.5	17.8	77.6	71.4	64.6	54.0	49.6	43.5	36.5	28.9	21.1
6	55.7	51.2	46.3	41.1	38.0	32.8	28.5	23.2	17.6	74.3	68.4	61.7	51.6	47.8	42.4	35.8	28.4	20.9
7	53.6	49.3	44.6	39.6	36.8	31.7	27.9	22.8	17.3	70.6	64.9	58.6	49.1	45.4	40.4	34.8	27.9	20.5
8	51.4	47.2	42.6	37.9	35.0	30.3	26.8	22.3	17.1	66.6	61.1	55.1	46.4	42.8	38.1	33.0	27.2	20.2
9	49.1	45.0	40.6	36.1	33.2	29.0	25.6	21.4	16.7	62.2	57.0	51.4	43.4	39.9	35.7	31.1	25.7	19.7
10	46.4	42.6	38.4	34.1	31.4	27.4	24.3	20.4	16.2	57.4	52.5	47.3	40.0	36.9	33.1	28.9	24.2	18.9
11	43.6	40.0	36.0	32.0	29.4	25.7	22.9	19.2	15.5	52.3	47.8	42.9	36.4	33.5	30.2	26.6	22.4	17.8
12	40.7	37.2	33.4	29.7	27.4	23.9	21.4	18.1	14.8	47.7	43.4	38.9	33.1	30.5	27.4	24.2	20.5	16.5
13	37.5	34.3	30.7	27.3	25.1	22.0	19.7	16.8	13.7	43.5	39.6	35.2	30.1	27.7	24.9	22.1	18.7	15.2
14	34.7	31.7	28.3	25.1	22.9	20.3	18.1	15.4	12.7	39.8	36.2	32.0	27.5	25.2	22.7	20.1	17.1	13.9
15	32.1	29.2	26.1	23.0	21.0	18.7	16.7	14.3	11.8	36.5	33.0	29.2	25.1	22.9	20.6	18.3	15.6	12.9
16	29.7	27.1	24.1	21.2	19.3	17.2	15.4	13.2	10.9	33.6	30.3	26.7	23.0	20.9	18.8	16.7	14.2	11.7
17	27.6	25.0	22.4	19.5	17.8	15.9	14.2	12.1	10.2	30.8	27.6	24.6	21.1	19.2	17.3	15.3	13.0	10.7
18	25.7	23.3	20.7	18.0	16.4	14.7	13.1	11.2	9.4	28.5	25.6	22.6	19.4	17.6	15.9	14.0	12.0	9.9
19	23.9	21.7	19.2	16.8	15.3	13.6	12.2	10.4	8.7	26.3	23.7	20.9	18.0	16.3	14.6	13.0	11.0	9.1
20									8.0									8.4

L5.0×5.0

KL (ft)	Grade 36.0 ksi 7/8	3/4	5/8	1/2	7/16	3/8	5/16	Grade 50.0 ksi 7/8	3/4	5/8	1/2	7/16	3/8	5/16
1	42.8	39.1	34.6	29.5	24.6	21.0	16.4	59.2	54.0	47.6	37.8	32.9	26.9	20.5
2	42.5	38.8	34.4	29.2	24.4	21.0	16.4	58.5	53.5	47.1	37.5	32.6	26.7	20.3
3	41.6	38.2	33.9	28.9	24.2	20.7	16.3	56.9	52.3	46.4	36.9	32.1	26.3	20.1
4	40.3	37.1	33.0	28.4	23.7	20.4	16.0	54.6	50.2	44.6	36.1	31.4	25.9	19.8
5	38.8	35.6	31.7	27.4	23.2	20.1	15.6	51.9	47.7	42.3	34.4	30.4	25.3	19.4
6	37.2	34.1	30.3	26.1	22.2	19.4	15.4	48.9	44.7	39.8	32.4	28.7	24.2	18.9
7	35.3	32.4	28.8	24.8	21.1	18.5	14.9	45.4	41.6	36.9	30.1	26.7	22.6	18.1
8	33.2	30.4	27.0	23.2	19.8	17.4	14.2	41.6	38.0	33.6	27.5	24.5	20.8	16.8
9	31.0	28.3	25.0	21.6	18.4	16.2	13.3	37.4	34.1	30.1	24.7	22.0	19.0	15.5
10	28.6	26.0	23.0	19.7	17.0	14.9	12.3	33.5	30.4	26.8	22.1	19.6	17.0	13.9
11	26.0	23.6	20.8	17.9	15.4	13.6	11.2	30.1	27.3	23.8	19.7	17.6	15.2	12.5
12	23.6	21.5	18.9	16.0	14.0	12.3	10.2	27.1	24.5	21.3	17.6	15.6	13.6	11.2
13	21.6	19.6	17.2	14.5	12.6	11.2	9.3	24.5	22.1	19.1	15.8	14.0	12.2	10.1
14	19.8	17.8	15.6	13.2	11.6	10.1	8.5	22.2	19.9	17.2	14.2	12.6	11.0	9.1
15	18.2	16.3	14.3	12.0	10.6	9.1	7.7	20.2	18.0	15.7	12.9	11.4	9.8	8.2
16	16.7	15.0	13.1	11.0	9.7	8.4	7.0	18.4	16.5	14.3	11.7	10.4	9.0	7.4

W320-24-020
Pg. B-4

Allowable Axial Load in Kips (cont.)

L4.0×4.0

(ft)	Grade 36.0 ksi							Grade 50.0 ksi						
	3/4	5/8	1/2	7/16	3/8	5/16	1/4	3/4	5/8	1/2	7/16	3/8	5/16	1/4
1	27.7	24.9	21.6	19.5	17.2	13.7	10.3	38.4	34.4	29.7	26.9	22.1	17.6	12.8
	27.3	24.5	21.4	19.3	17.1	13.6	10.2	37.6	33.8	29.3	26.4	21.8	17.4	12.7
	26.5	23.8	20.8	18.9	16.7	13.4	10.1	36.0	32.2	28.3	25.8	21.3	17.0	12.5
	25.3	22.7	19.9	18.1	16.2	13.0	9.9	33.6	30.4	26.5	24.1	20.3	16.5	12.2
5	23.9	21.4	18.7	17.1	15.2	12.4	9.6	31.3	28.1	24.5	22.3	18.8	15.5	11.8
6	22.4	20.0	17.5	15.9	14.2	11.6	9.1	28.5	25.4	22.2	20.2	17.1	14.1	11.0
7	20.7	18.4	16.1	14.6	13.0	10.6	8.5	25.2	22.5	19.5	17.7	15.1	12.6	10.0
8	18.7	16.7	14.4	13.2	11.7	9.7	7.7	22.1	19.6	16.9	15.2	13.1	11.0	8.8
9	16.6	14.8	12.8	11.6	10.3	8.6	7.0	19.3	17.1	14.6	13.2	11.4	9.6	7.7
10	14.9	13.2	11.3	10.2	9.0	7.6	6.2	17.0	15.0	12.7	11.4	9.9	8.4	6.7
11	13.4	11.8	10.1	9.1	8.0	6.7	5.4	15.1	13.2	11.2	10.1	8.7	7.3	5.9
12	12.0	10.5	9.0	8.1	7.1	6.0	4.9	13.5	11.7	9.9	8.9	7.6	6.5	5.2
13			8.1	7.2	6.3	5.4	4.3			8.8	7.9	6.8	5.7	4.6

L3.5×3.5

KL (ft)	Grade 36.0 ksi					Grade 50.0 ksi				
	1/2	7/16	3/8	5/16	1/4	1/2	7/16	3/8	5/16	1/4
1	17.7	16.1	14.5	11.7	9.3	24.3	22.1	19.6	15.7	11.7
2	17.4	15.8	14.3	11.5	9.1	23.8	21.7	18.3	15.5	11.6
3	16.7	15.2	13.8	11.2	8.9	22.5	20.6	17.5	15.0	11.3
4	15.7	14.3	13.0	10.6	8.7	20.7	18.9	16.2	14.0	10.9
5	14.6	13.3	12.1	9.9	8.1	18.7	17.0	14.6	12.6	9.9
6	13.3	12.1	11.0	9.1	7.4	16.3	14.9	12.8	11.1	8.8
7	11.9	10.8	9.8	8.1	6.7	14.0	12.6	10.9	9.4	7.6
8	10.4	9.4	8.5	7.1	5.9	12.0	10.7	9.4	8.1	6.6
9	9.0	8.3	7.4	6.2	5.1	10.2	9.3	8.1	6.9	5.5
10	8.0	7.2	6.4	5.5	4.5	8.9	7.9	7.0	6.0	4.9
11	7.1	6.3	5.6	4.7	3.9	7.8	6.9	6.0	5.2	4.2

L3.0×3.0

KL (ft)	Grade 36.0 ksi						Grade 50.0 ksi					
	1/2	7/16	3/8	5/16	1/4	3/16	1/2	7/16	3/8	5/16	1/4	3/16
1	14.0	12.8	11.6	10.1	7.9	5.5	19.2	17.7	15.9	13.0	10.3	6.9
2	13.5	12.4	11.3	9.9	7.7	5.4	18.5	17.0	15.4	12.6	10.1	6.8
3	12.8	11.8	10.7	9.4	7.5	5.3	17.2	15.7	14.3	11.9	9.6	6.5
4	11.8	10.9	9.9	8.7	7.0	5.1	15.4	14.2	12.8	10.6	8.8	6.2
5	10.8	9.9	8.9	7.8	6.3	4.7	13.3	12.2	11.1	9.2	7.6	5.5
6	9.5	8.6	7.8	6.9	5.5	4.1	11.2	10.2	9.2	7.7	6.3	4.7
7	8.1	7.4	6.7	5.9	4.7	3.6	9.4	8.6	7.6	6.5	5.3	4.0
8	7.0	6.4	5.7	4.9	4.0	3.1	8.0	7.2	6.4	5.4	4.4	3.3
9	6.0	5.5	4.9	4.2	3.5	2.6	6.8	6.1	5.4	4.6	3.8	2.8

L2.5×2.5

KL (ft)	Grade 36.0 ksi					Grade 50.0 ksi				
	1/2	3/8	5/16	1/4	3/16	1/2	3/8	5/16	1/4	3/16
1	10.4	8.8	7.7	6.5	4.7	14.3	12.1	10.6	8.4	6.0
2	9.8	8.4	7.4	6.3	4.6	13.4	11.4	10.1	8.0	5.8
3	9.1	7.8	6.8	5.9	4.4	12.1	10.2	9.1	7.2	5.4
4	8.3	6.9	6.1	5.2	3.9	10.5	8.7	7.7	6.2	4.7
5	7.2	6.0	5.3	4.5	3.4	8.5	7.0	6.2	5.0	3.9
6	6.0	5.0	4.3	3.7	2.8	7.0	5.8	4.9	4.1	3.1
7	5.0	4.1	3.6	3.1	2.3	5.7	4.6	4.0	3.4	2.5
8	4.3	3.5	3.1	2.6	2.0	4.8	3.9	3.3	2.7	2.1

L2.0×2.0

KL (ft)	Grade 36.0 ksi					Grade 50.0 ksi				
	3/8	5/16	1/4	3/16	1/8	3/8	5/16	1/4	3/16	1/8
1	6.0	5.4	4.7	3.7	2.2	8.3	7.5	6.5	4.8	2.8
2	5.6	5.1	4.4	3.5	2.2	7.6	6.8	5.9	4.5	2.7
3	5.0	4.5	3.9	3.1	2.0	6.4	5.7	5.0	3.8	2.4
4	4.3	3.8	3.2	2.6	1.7	5.1	4.5	3.8	3.0	2.0
5	3.4	3.0	2.6	2.1	1.4	3.9	3.5	3.0	2.3	1.5
6	2.8	2.5	2.1	1.7	1.1	3.1	2.7	2.3	1.8	1.2

HNF-2467, Rev.0

Page B-22

W320-24-021

Misc. Mechanical (HVAC) Equipment Foundation
Exhaust Air Cleanup Train Skid

KAISER ENGINEERS
HANFORD

	CALCULATION IDENTIFICATION AND INDEX	Page i of iii Date 07/21/94

This sheet shows the status and description of the attached Design Analysis sheets.

Discipline Civil WO/Job No. W-320/ER-4319 Calculation No. W320-24-021

Project No. & Name PROJECT W-320, TANK 241-C-106 WASTE RETRIEVAL

Calculation Item Miscellaneous Mechanical (HVAC) Equipment Foundation - Exhaust Air Cleanup Train

These calculations apply to:

Dwg. No. H-2-818458, SHT. 2 Rev. No. 0

Dwg. No. Rev. No.

Other (Study, CDR) Rev. No.

The status of these calculations is:

[ ] Preliminary Calculations

[X] Final Calculations

[ ] Check Calculations (On Calculation Dated)

[ ] Void Calculation (Reason Voided)

Incorporated in Final Drawings? [X] Yes [ ] No

This calculation verified by independent "check" calculations? [ ] Yes [X] No

Original and Revised Calculation Approvals:

	Rev. 0 Signature/Date	Rev. 1 Signature/Date	Rev. 2 Signature/Date
Originator	Michael R Custer 7/27/94	R.W. Davidson 2/13/96	Ann Shangevin 2/5/98
Checked by	James R Booth 9/27/94	Michael R Custer 5/13/96	Michael R Custer 2/6/98
Approved by	R.W. Davidson 4/14/95	R.W. Davidson 5/13/96	Ann Shangevin 2/6/98
Checked Against Approved Vendor Data			Ann Shangevin 4/7/98

INDEX

Design Analysis Page No.	Description
i	Calculation Identification and Index
ii	Calculation Cross Index
iii	Design Verification Screening Criteria
1,2	OBJECTIVES; CRITERIA; DATA; ASSUMPTIONS; METHODS; REFERENCES; CALCULATIONS; CONCLUSIONS
3 - 18	DESIGN CALCULATIONS
APPENDICES	None

13/96

1 REV 1: ALTERNATE ANCHOR BOLT DESIGN ADDED ON PAGE 15.
SEE ECN W-320-182, ITEM 2A.

2 Rev 2: Add pages 19-22 for the addition of the vacuum

CALCULATION CROSS INDEX (Typical)

Subject Calculation No. W320-24-021, REV. 0

Subject Calculation Revision No.	Superceded by Calculation No.	These interfacing calculation/documents provide input to the subject calculation, and if revised may require revision of the subject calculation.		Results and conclusions of the subject calculation are used in these interfacing calculations and/or documents.		Does the output interface calculation/ documents require revision?		Has the output interface calculation/ documents been revised?		Discipline manager's signature and date indicating evaluation complete.
		Calculation/Document No.	Revision No.	Calculation/Document No.	Revision No.	Yes	No	Yes	No	
0	—			H-2-818458 (SHT. 2)	0					[illegible] 4/14/95
2	—			ECN W320-692	—					ASLangevin 2/5/98

DESIGN VERIFICATION SCREENING CRITERIA

Project/Document No. W320/CALCULATION, W320-24-021, REV. 0

When the design or design change affects hardware, formal design verification must be performed if one or more of the following questions must be answered affirmatively (YES).

YES	NO		
	✓	1.	Does the design or design change involved meet the established criteria to be considered Safety Class 1 or 2?
	✓	2.	Does this design or design change cause or permit changes to Safety Class 1 or 2 instrument or alarm setpoints outside of previously approved operational limits?
	✓	3.	Does this design or design change significantly affect the nuclear safety consequences of a malfunction or failure of the structure, system, or component?
	✓	4.	Does this design or design change involve or change design that has previously undergone formal design verification?

R W Davidson — 6/16/95
Assigned Lead Engineer — Date

R W Davidson — 6/16/95
Responsible Discipline Manager — Date

Original Design Package Distribution:
- Project Engineer
- Chief Design Engineer
- Engineering Document Control

Design Change Distribution:
- Attach to Engineering Change Notice

KAISER ENGINEERS HANFORD

Calc. No. W320-24-021
Revision 0
Page No. 1 of 18

DESIGN ANALYSIS

Client WHC
Subject Miscellaneous Mechanical (HVAC) Equipment Foundations - Exhaust Air Cleanup Train Skid
Location TANK 241-C-106

WO/Job No. W-320/ER-4319
Date 07/21/94 By M.R Custer
Checked 9/27/94 By JRB
Revised By

OBJECTIVE:

The objective of this calculation is to provide the detailed design for the Exhaust Air Cleanup Train foundation. The design of the foundation shall be performed in accordance with ACI-318 (Strength Design) and the Uniform Building Code (1991), as required by the project design criteria, SDC-4.4, Rev.11. Since definitive information regarding the weights and geometry of the equipment will not be available, due to long lead time for purchase, conservative estimates of the weights and equipment geometry will be used to perform the analysis and design. The foundation for the Exhaust Air Cleanup Train Skid is located inside the tank farm.

CRITERIA:

1. DOE ORDER 6430.1A (04/06/89)
2. HANFORD PLANT STANDARDS, STANDARD ARCH./CIVIL DESIGN CRITERIA, SDC-4.1, REV.11
3. FUNCTIONAL DESIGN CRITERIA, WHC-SD-W320-FDC-001, REV.2
4. LETTERS OF INSTRUCTION:
5. ASCE 7-88

DATA:

1. The equipment and foundations for the equipment in this calculation are Safety Class 3 per Reference 4.

ASSUMPTIONS: Weights and equipment geometry will be conservatively assumed and will be verified on receipt and review of the vendor drawings.

METHODS: Hand calculations

REFERENCES:

1. ACI 318-91, Building Code Requirements for Reinforced Concrete.
2. Uniform Building Code (UBC), (1991 Edition).
3. HANFORD PLANT STANDARDS, STANDARD ARCH./ CIVIL DESIGN CRITERIA, SDC-4.1, REV.11.
4. WHC-SD-WM-SEL-033, REV.0-C, Interm Safety Equipment List for 241-C-106 WASTE RETRIEVAL.
5. Foundation Analysis and Design, Joesph E. Bowles (1st Edition).
6. ASCE 7-88 (American Society of Civil Engineers Standard), Minimum Design Loads for Buildings and Other Structures.

KAISER ENGINEERS HANFORD

Calc. No. W320-24-021
Revision 0
Page No. 2 of 18

DESIGN ANALYSIS

Client WHC

Subject Miscellaneous Mechanical (HVAC) Equipment Foundations - Exhaust Air Cleanup Train Skid

Location TANK 241-C-106

WO/Job No. W-320/ER-4319
Date 07/21/94 By M.R Custer
Checked 9/27/94 By JRB
Revised By

CALCULATIONS:

Refer to Design Calculation section

CONCLUSIONS:

The foundation for the Exhaust Skid is designed as a slab on grade. The loads developed in the calculation, while conservative are minimal, based on the physical area required by the piping and equipment configuration. The design satisfies the design requirements for the foundation.

KAISER ENGINEERS HANFORD

Calc. No. W320-24-021
Revision 0
Page No. 3 of 18

DESIGN ANALYSIS

Client WHC

Subject Miscellaneous Mechanical (HVAC) Equipment Foundations - Exhaust Air Cleanup Train Skid

WO/Job No. W-320/ER-4319

Date 07/21/94 By M.R Custer MRC

Checked 9/27/94 By JRB

Location TANK 241-C-106

Revised By

DESIGN CALCULATIONS:

The design and analysis of the Exhaust skid foundation consists of developing conservative estimates for the weights of the major equipment, determine relative locations for each equipment on the foundation and design of the concrete foundation to support the load configuration. All equipment supported on the foundation is Safety Class 3 per Reference 4, therefore the design of the foundation is Safety Class 3.

DESIGN REQUIREMENTS:

- Allowable soil pressure for foundation design, 2000 lb/sq.ft. (Reference 2)
- Coefficient of Sliding = 0.25 (Reference 2)
- Minimum footing dimensions, (Reference 2)
  - Thickness of foundation wall, 6"
  - Width of footing, 12"
  - Thickness of footing, 6" (Above the reinforcement)
  - Depth of footing below undisturbed ground, 12"
  - Minimum slab thickness (plain concrete), 3 1/2"
- Snow/Roof Live Load, 20 lbs/sq.ft. (Reference 3)
- Wind Load, (Reference 3)
  - Basic wind speed, 70 mph
  - Importance Factor, 1.07
  - Exposure Category, C

KAISER ENGINEERS HANFORD

Calc. No. W320-24-021
Revision 0
Page No. 4 of 18

DESIGN ANALYSIS

Client WHC

Subject Miscellaneous Mechanical (HVAC) Equipment Foundations - Exhaust Air Cleanup Train Skid

WO/Job No. W-320/ER-4319
Date 07/21/94 By M.R Custer MRC

Checked 9/27/94 By JRB

Location TANK 241-C-106

Revised By

DESIGN LOADS:

DEAD LOADS

- Mechanical equipment (i.e the exhaust fan, stack, HVAC duct/ filters, duct supports, electrical panels and structural skid. Estimated weights for each equipment are:

EQUIPMENT	WEIGHT
a) Exhaust Fan	800 lbs
b) Exhaust Stack	800 lbs
c) (3) Elect.Panels	1200 lbs
d) HVAC Filter Assembly	3200 lbs
e) Equipment Container and Structural framing	2800 lbs
f) Structural Skid	10000 lbs
Total Equipment Weight =	**18800 lbs**

- Dead Load - Foundation (assume 12 " thick slab):

  Wt. slab = 7.5 ft x 27.0 ft x 1.0 ft x 150 lbs/ft^3 =

  Total Concrete Weight = 30375 lbs = 30.4 Kips

EQUIPMENT LIVE LOAD:

- Equipment Live Load, LLr = Equip. Live Load x 1.5 (Reference 2)

  The equipment live load for this design is considered negligible due to the extremely, small magnitude of the loads transmitted by the rotating equipment (fan unit). An accepted, simplified approach to determine adequacy of a foundation is a comparison of the masses (mass ratio). The mass of the foundation should be 3 to 5 times the weight of the rotating equipment. For this case the ratio is: (Reference 5, page 601)

  Mass Ratio = 30.4/ 4.0 (equipment contributing) = 7.6 (conservative)

KAISER ENGINEERS
HANFORD

Calc. No. W320-24-021
Revision 0
Page No. 5 of 18

DESIGN ANALYSIS

Client WHC

Subject Miscellaneous Mechanical (HVAC) Equipment Foundations - Exhaust Air Cleanup Train Skid

WO/Job No. W-320/ER-4319
Date 07/21/94 By M.R Custer MRC

Checked 9/27/94 By JRB

Location TANK 241-C-106

Revised By

WIND LOAD:

- Determine wind load (general):

$qz = 0.00256\ Kz\ (IV)^2$, where (Reference 6)

Kz = 0.80 (Exposure C) (Reference 3)

I = 1.07

V = 70 mph

$qz = 0.00256\ (0.80)[(1.07)70]^2 = 11.5\ lb/\ ft^2$

F = qz Gh Cf Af, where: (Reference 6)

Gh = 1.32 (Ref. 6, Table 8)

Cf = 2.0 (Ref. 6, Table 12)

F = 11.5 (1.32) (2.0) Af,

$Fw = 30.4\ lbs/\ ft^2 \times Af$

$Fw = 30.4\ lbs/\ ft^2\ (4.0\ ft \times 26.0\ ft) = 3162\ lbs = 3.2\ k$

SNOW LOAD: 20 lbs/sf. ft. (Reference 3)

- Equipment:

$S = 6.5\ ft \times 26.0\ ft \times 20\ lbs/\ ft^2 =$
S = 3380 lbs = 3.4 k

- Foundation:

$S = 7.5\ ft \times 27.0\ ft \times 20\ lbs/ft^2 = 4050\ lbs$
S = 4050 lbs = 4.1 k <***** Governs

KAISER ENGINEERS HANFORD

Calc. No. W320-24-021
Revision 0
Page No. 6 of 18

DESIGN ANALYSIS

Client WHC

Subject Miscellaneous Mechanical (HVAC) Equipment Foundations - Exhaust Air Cleanup Train Skid

WO/Job No. W-320/ER-4319
Date 07/21/94 By M.R Custer MRC

Checked 9/27/94 By JRB

Location TANK 241-C-106

Revised By

EARTHQUAKE LOADS:

- Lateral Seismic Force, Fp = ZICp Wp, where: (Reference 2)

Z = 0.20 (Reference 2)

I = 1.25 (Reference 3)

Cp = .75 x 2 = 1.5 (Reference 3)

Fp = (0.20)(1.25)(1.5) Wp = 0.375 Wp

E n-s = Vn-s (100% max.) (Reference 2)

E e-w = Ve-w (30% max.) (Reference 2)

E n-s = Vn-s = 0.375 Wp = 0.375 (18800) = 7050 lbs = **7.1 Kips**

E e-w = Vn-s = 0.375 Wp (0.3) = 0.375 (18800)(0.3)= 2115 lbs = **2.1 Kips**

$E\ (SRSS) = [7.1^2 + 2.1^2]^{1/2} =$ (Reference 2 & 3)

E (SRSS) = 7.4 Kips (Apply force in direction providing maximum load conditions)

- Distribution of seismic forces by component:

LOAD IDENTIFIER	VERTICAL COMP.* RATIO	HORIZ. COMPONENT
a) Exhaust Fan	800 (7400/18800)	315 lbs
b) Exhaust Stack	800 "	315 lbs
c) (3) Elect. Panels	1200 "	472 lbs
d) HVAC Filter Assembly	3200 "	1260 lbs
e) Equip. Container	2800 "	1102 lbs
f) Structural Skid	10000 "	3936 lbs
TOTAL WEIGHT =	18800 lbs	7400 lbs

KAISER ENGINEERS HANFORD

Calc. No. W320-24-021
Revision 0
Page No. 7 of 18

DESIGN ANALYSIS

Client WHC

Subject Miscellaneous Mechanical (HVAC) Equipment Foundations - Exhaust Air Cleanup Train Skid

WO/Job No. W-320/ER-4319
Date 07/21/94 By M.R Custer MRC

Checked 9/27/94 By JRB

Location TANK 241-C-106

Revised By

LOCATE THE CENTER OF GRAVITY/CENTER OF MASS FOR THE EQUIPMENT/COMPONENTS:

Component Description	Weight,lbs	[X-distance,	Z-Distance,	H-Distance,(ft.)
a) Exhaust Fan	800 lbs	23.5 ft	3.5 ft	3.0 ft
b) Exhaust Stack	800 lbs	22.5 ft	4.0 ft	11.0 ft
c) (3) Elect. Panels	1200 lbs	16.5 ft	4.5 ft	4.0 ft
d) HVAC Filter Assembly	3200 lbs	13.5 ft	3.5 ft	4.5 ft
e) Equip. Container	2800 lbs	13.5 ft	3.8 ft	5.0 ft
f) Structural Skid	10000 lbs	13.5 ft	3.8 ft	0.5 ft

Reference points for the x, z, and h distances are as follows:

1) x-distance, dimension from the west edge of the slab to the approximate center of mass of the component in the east-west direction.

2) z-distance, dimension from the south edge of the slab to the approximate center of mass of the component in the north-south direction.

3) h-distance, dimension from the top of the slab to the approximate center of mass of the component in the vertical direction.

CENTER OF GRAVITY: (Ref. sketch, Figure 1, page 16)

- Center Gravity, East-West direction

$\bar{x} = \Sigma P(x)/ \Sigma P = 272600$ ft-lb/ 18800 lbs

$\bar{x} = 14.5$ ft

- Center of Gravity, North-South direction

$\bar{z} = \Sigma P(z)/ \Sigma P = 71240$ ft-lbs/ 18800 lbs

$\bar{z} = 3.8$ ft

KAISER ENGINEERS HANFORD

Calc. No. W320-24-021
Revision 0
Page No. 8 of 18

DESIGN ANALYSIS

Client WHC

Subject Miscellaneous Mechanical (HVAC) Equipment Foundations - Exhaust Air Cleanup Train Skid

WO/Job No. W-320/ER-4319
Date 07/21/94 By M.R Custer MRC
Checked 9/27/94 By JRB

Location TANK 241-C-106
Revised By

CENTER OF MASS: (Above the top of the foundation) (Ref. sketch, Figure 1, page 16)

- Eccentricity ($\bar{h}$):

$\bar{h} = \Sigma P(h)/ \Sigma P = 19446$ lb-ft/ 7400 lbs

$\bar{h} = 2.6$ ft, (Center of mass above the top of the foundation)

DETERMINE GOVERNING LOAD COMBINATION: (Equipment support design)

- Load Combinations:

(Reference 2)

1) U = D + L + (LLr or S)
2) U = D + L + W or E
3) U = D + L + W + S/2
4) U = D + L + S + W/2
5) U = D + L + S + E

Abbreviations:

D = Dead Load
L = Live Load (floor)
W = Wind Load
S = Snow Load
E = Earthquake Load
LLr = Roof Live Load

- The evaluation of each load combination is required to determine the maximum reactions for each equipment/ component for design of the supports:

- L is constant; LLr = 0.0
- **BOLD** - designates load combination governing support design

ITEM:	D	W	S	E	Load Combination: 1)	2)	3)	4)	5)
a)	0.8	0.0	0.0	0.3	0.80	**1.10**	0.80	0.80	**1.10**
b)	0.8	0.0	0.0	0.3	0.08	**1.10**	0.80	0.80	**1.10**
c)	1.2	0.0	0.0	0.5	1.20	**1.70**	1.20	1.20	**1.70**
d)	3.2	0.0	0.0	1.3	3.20	**4.50**	3.20	3.20	**4.50**
e)	2.8	3.2	3.4	1.1	6.20	6.00	7.70	**7.80**	7.30
f)	10.0	0.0	0.0	3.9	10.0	**13.9**	10.0	10.0	**13.9**

KAISER ENGINEERS HANFORD

Calc. No. W320-24-021
Revision 0
Page No. 9 of 18

DESIGN ANALYSIS

Client WHC

Subject Miscellaneous Mechanical (HVAC) Equipment Foundations - Exhaust Air Cleanup Train Skid

WO/Job No. W-320/ER-4319

Date 07/21/94 By M.R Custer MRC

Checked 9/27/94 By JRB

Location TANK 241-C-106

Revised By

DETERMINE THE GOVERNING LOAD COMBINATION: (Foundation design)

• Load Combinations: (Reference 1,2 & 3)

D = DEAD LOAD, L = LIVE LOAD, W = WIND LOAD, E = EARTHQUAKE LOAD

1) U = 1.4D + 1.7L (Minimum design requirements)
2) U = 0.75 (1.4D + 1.7L + 1.7W)
3) U = 0.9D + 1.3 W

In addition, if earthquake loads are included in the design, load combinations of section 2609(c)(2),(Reference 3) apply, except (1.1E) is substituted for (W), as follows:

4) U = 0.75 (1.4D + 1.7L + 1.87E)
5) U = 0.9D + 1.43E

also for earthquake loading, use the following:

6) U = 1.4 (D + L+ E)
7) U = 0.9D +/- 1.4E

• Evaluate Load Combinations:

1) U = 1.4 (18.8) + 1.7 (4.1) = 33.3 kips

2) U = 0.75 [1.4 (18.8) + 1.7 (4.1) + 1.7 (3.2)2.5/6.5] = 26.5 kips

3) U = 0.9 (18.8) + 1.3 [(3.2)(2.5)/6.5] = 18.5 kips

4) U = 0.75 [1.4 (18.8) + 1.7 (4.1) + 1.87 (7.4)(2.5)/6.5]= 28.9 kips

5) U = 0.9 (18.8) + [1.43 (7.4)(2.5)/6.5] = 21.0 kips

6) **U = 1.4 (18.8 + 4.1 + [(7.4)(2.5)/6.5)] = 36.1 kips <****

7) U = 0.9 (18.8) +/- 1.4 [(7.4)(2.5)/6.5] = 20.9 kips

KAISER ENGINEERS HANFORD

Calc. No. W320-24-021
Revision 0
Page No. 10 of 18

DESIGN ANALYSIS

Client WHC

Subject Miscellaneous Mechanical (HVAC) Equipment Foundations - Exhaust Air Cleanup Train Skid

WO/Job No. W-320/ER-4319

Date 07/21/94 By M.R Custer MRC

Checked 9/27/94 By JRB

Location TANK 241-C-106

Revised By

FOUNDATION DESIGN:

The foundation required is a mat type on grade. The size of foundation has been predetermined by the physical layout required for the equipment and components.

The foundation dimensions are: 7.5 ft x 27.0 ft, estimated 12" thick
(Reference Figures 1,2 & 3 for loads and locations)

- Check foundation size: (Reference sketch, Figures 2,3 page 17)

  $qe(\text{effective}) = 2\ k/ft^2 - 12/12\ (150\ lb/\ ft^3)\ (1\ k/\ 1000\ lb) = 1.85\ k/ft^2$

  $A\ req = (D.L + L.L)/\ qe = (22.8)/\ 1.85\ k/ft^2$

  $A\ req = 12\ ft^2 < 169\ ft^2$ .....OK

- Check foundation stability:

  Safety Factor (Overturning):

  S.F (ot) = [3.75 ft (30.4 k) + 3.75 ft (18.8 k)]/ 2.6 ft (7.4 k)

  S.F (ot) = 9.6 > 1.5 ....OK

  Safety Factor (Sliding):

  S.F (sliding) = [.25 (30.4 + 18.8)]/ 7.4 = 1.7 > 1.5 ....OK (Loads were doubled)

- Determine the center of gravity of the loads relative to the kern:

  e (x),(length) = 27.0 ft/ 6 = 4.5 ft

  e (z),(width) = 7.5 ft/ 6 = 1.3 ft

  $\bar{x}$ = 14.5 ft and $\bar{z}$ = 3.8 ft (per page 7):

  e(x) = 14.5 - 13.5 = 1.0 ft. < 4.5/ 2 = 2.25 ft.
  Load in middle 1/3 of slab)....OK

  e(z) = 3.8 ft. - 3.75 ft. = 0.05 ft < 0.65 ft.,
  Load in the middle 1/3 of slab....OK

Use q = P/A (+/-) Mc/I approach (two directions) to determine maximum soil bearing p pressures

KAISER ENGINEERS HANFORD

Calc. No. W320-24-021
Revision 0
Page No. 11 of 18

DESIGN ANALYSIS

Client WHC

Subject Miscellaneous Mechanical (HVAC) Equipment Foundations - Exhaust Air Cleanup Train Skid

WO/Job No. W-320/ER-4319
Date 07/21/94 By M.R Custer MRC
Checked 9/27/94 By JRB

Location TANK 241-C-106
Revised By

- Determine maximum soil bearing pressure:

Mx(e)(n-s) = 3.6 ft (7.1 k) = 25.6 k-ft

P1 = 18.8 k (Load eccentric with foundation centerline x-direction)

P2 = 4.1 k

Mz(ex) = 18.8 k (1.0 ft) = 18.8 k-ft

Mz(e)(n-s) = 3.6 ft (2.1 k) = 7.56 k-ft

Maximum soil pressures:

q = P/A (+/-) ΣMx e(z)/ Ix (+/-) ΣMz e(x)/ Iz, where:

$Ix = bd^3/12 = [7.5\ (27.0)^3]/12 = 12302\ ft^4$

$Iz = bd^3/12 = [27.0\ (7.5)^3]/12 = 949\ ft^4$

$q = (18.8\ k + 4.1\ k)/\ 7.5\ ft\ (27.0\ ft)$ +/- $[(25.6\ k\text{-}ft)(0.05\ ft)]/\ 12302\ ft^4$

+/- $[(18.8\ k\text{-}ft + 7.56\ k\text{-}ft)(1.0\ ft)]/\ 949\ ft^4$

$q = 0.11\ k/ft^2$ (+/-) $0.0001\ k/ft^2$ (+/-) .028 k/ft, q(Mx) = 0

$q = (+)\ 0.11\ (+)\ 0.028 = +\ 0.138\ k/ft^2$ (maximum)

$q = (+)\ 0.11\ (-)\ 0.028 = +\ 0.082\ k/ft^2$ (minimum)

$q\ (maximum) = 0.138\ k/ft^2 + 0.15\ (conc.) = 0.29\ k/ft^2$

$q\ (minimum) = 0.082\ k/ft^2 + 0.15\ (conc.) = 0.23\ k/ft^2$

$q\ (average) = (0.29\ k/ft^2 + 0.23\ k\text{-}ft^2)/\ 2 = 0.26\ k/ft^2$

$q\ (average) = 0.26\ k/ft^2 < q\ (allow.) = 2.0\ k/ft^2$ ..... ok

KAISER ENGINEERS HANFORD

Calc. No. W320-24-021
Revision 0
Page No. 12 of 18

DESIGN ANALYSIS

Client WHC

Subject Miscellaneous Mechanical (HVAC) Equipment Foundations - Exhaust Air Cleanup Train Skid

WO/Job No. W-320/ER-4319

Date 07/21/94 By M.R Custer MRC

Checked 9/27/94 By JRB

Location TANK 241-C-106

Revised By

- Check slab two way shear:

The critical area for punching shear on the foundation will be at the equipment skid, embedded baseplates, located at each corner of the foundation. The equipment loads are conservatively assumed concentrated at these locations.

Assumed depth of slab, d =12 ", then d effective = (12 " - 3 " - 0.5) = 8.5 "

bo, (punching shear) = (12" + 12" + 8.5"/2) = 28.25 " = 2.35 ft

$qu = 1.7 \times 0.26\ k/ft^2 = 0.44\ k/ft^2$

$Vu = [(7.5\ ft)(27.0\ ft) - (2.35\ ft)(4)]\ (0.44\ k/ft^2) = 85.0\ k$

$d(req'd) = 85000/\ 0.85\ (4)\ (4000)^{1/2}\ 2(28.25)(8.5) = 0.82$ "

d = 0.82 " + 3 " + 0.5 " = 4.32" < 12 ".... ok

- Check slab one way shear:

$Vu = (7.5\ ft)\ (12.8\ ft)\ (\ 0.44\ k/ft^2\ ) = 42.2\ k$

$d = 42200\ lbs\ /\ (.85)\ (2)\ (4000)^{1/2}\ (90\ ") = 4.36$ "

d = 4.36" + 3 " + 0.5 " = 7.86" < 12 ....ok

- Determine slab flexural reinforcement requirements: (Long Direction)

$Mu = (7.5\ ft)\ (6.75\ ft)\ (0.44\ k/ft^2\ )\ (6.75\ ft/\ 2) = 75.2\ k\text{-}ft$

$Mu = 75.2\ k\text{-}ft = 75200\ lb\text{-}ft$

$Mu/\ 0.90\ b\ d^2 = 12\ (75200)/\ 0.90\ (90)\ (8.5)^2 = 154$, $p < p\ min = 0.0033$ (flexural)

p(max) = 0.0285, p(min) = 0.0018 (slab of uniform thickness on grade),

Use p min = 0.0018

$As = 0.0018\ (90"\ )(8.5") = 1.38\ in^2$, $As = 0.21\ in^2/\ ft$ (Use width of 6.5 ft.)

Use #5 @ 12" o.c, $As = 0.31\ in^2/\ ft$ .... ok

KAISER ENGINEERS HANFORD

Calc. No. W320-24-021
Revision 0
Page No. 13 of 18

DESIGN ANALYSIS

Client WHC

Subject Miscellaneous Mechanical (HVAC) Equipment Foundations - Exhaust Air Cleanup Train Skid

WO/Job No. W-320/ER-4319
Date 07/21/94 By M.R Custer MRC
Checked 9/27/94 By JRB

Location TANK 241-C-106 Revised By

- Determine slab flexural reinforcement requirements: (Short Direction)

$Mu = (3.75\ ft)\ (27\ ft)\ (0.44\ k/\ ft^2)\ (3.75\ ft/\ 2) = 83.5\ k\text{-}ft$

$Mu = 83500\ lb\text{-}ft$

$Mu/\ 0.90\ b\ d^2 = 12\ (83500\ lb\text{-}ft)/\ (0.90)\ (324")\ (8.5)^2 = 47.6,$

p design < p min = 0.0033 (flexural), Use p min = 0.0018 (slab of uniform thickness on grade)

$As = 0.0018\ (324")(8.5") = 5.0\ in^2,\ As = 0.19\ in^2/\ ft$ (Use length of 26.0 ft)

Use # 5 @ 12" o.c, $As = 0.31\ in^2/\ ft$ .... ok

- Check reinforcement bar development length requirements:

$l(db) = [0.04\ Ab\ f(y)]/\ (f'c)^{1/2}$ (Reference 2, section 2612(c), page 469)

$l(db) = 0.04\ (0.44)\ (60000)/\ (4000)^{1/2} = 16.7"\ (1.0)(0.8) = 13.4\ ",$

but not $< 0.03\ (db)(fy)/\ fc' = 0.03\ (0.75)(60000)/4000^{1/2} = 21.3\ "$

ld (provided) = 12" + 12" - 2" = 22" > 21.3 ....ok

The critical section for both the long and short spans is 24" from the section to the free edge of the slab.

ld (min), per UBC = 12 " < 22" .....ok

KAISER ENGINEERS HANFORD

Calc. No. W320-24-021
Revision 0
Page No. 14 of 18

DESIGN ANALYSIS

Client WHC
Subject Miscellaneous Mechanical (HVAC) Equipment Foundations - Exhaust Air Cleanup Train Skid
WO/Job No. W-320/ER-4319
Date 07/21/94 By M.R Custer MRC
Checked 9/27/94 By JRB
Location TANK 241-C-106
Revised By

- Determine equipment anchorage requirements: (Loads multiplied by a factor of 2.25 to address the equipment live load for rotating equipment and a conservatism adder.

Equipment	Horizontal Force/ Type	Shear Force	Tension Force
a) Exhaust Fan	0.3 k / E	0.30(2.25)/4 = 0.17 k	0.30(2.25)(24) /24 = 0.68 k
b) Exhaust Stack	0.30 k / E	0.30(2.25)/4 = 0.17 k	0.30 (2.25)(96) /(24) = 2.7 k
c) Elect. Panel/ea.	0.20 k / E	0.20(2.25)/4 = 0.11 k	0.20(2.25)(36) /(18) = 0.9 k
d) HVAC Filter Assembly	1.30 k / E	1.3(2.25)/4 = 0.73 k	1.3 (2.25)(42) /(24) = 5.1 k
e) Equipment Container	3.20 k / W	3.2(2.25)/4 = 1.8 k	3.2 (2.25)(30) /(72) = 3.0 k
f) Structural Skid	7.4 k / E	7.4(2.25)/10 = 1.7 k	7.4 (2.25)(30) /(78) = 6.4 k

LEGEND:

(E), Indicates earthquake load governs horizontal loading
(W), Indicates wind load governs horizontal loading

NOTES:

1) Shear loads are assuming a minimum of (4) bolts per each equipment or as indicated.

2) Tension Loads indicated are total reactions per side of each equipment. Anchorage shall be uniformly distributed along each side of each equipment.

KAISER ENGINEERS HANFORD

Calc. No. W320-24-021
Revision ~~0~~ 1
Page No. 15 of 18

DESIGN ANALYSIS

Client WHC
Subject Miscellaneous Mechanical (HVAC) Equipment Foundations - Exhaust Air Cleanup Train Skid

WO/Job No. W-320/ER-4319
Date 07/21/94 By M.R Custer MRC
Checked 9/27/94 By JRB
Revised 2/13/96 By RW Douglas

Location TANK 241-C-106

Anchor Bolt requirements:

The use of anchor bolts with sleeves requires a thickened slab at each anchor bolt location, with a minimum of 12" beyond the bolt centerlines in all directions.

- Determine size and number of anchor bolts required for the structural skid attachment to the foundation:

BOLT LOADS:

Tension load = 6.4 kips/ 5 bolts = 1.3 k/ anchor bolt
Shear load = 1.7 kips/ 1 bolt = 1.7 k/ anchor bolt

Try 3/4" dia. anchor w/ 5" embedment:

Allowable tension load = 4500 lbs = 4.50 k (Reference 2, Table No. 26-E)
Allowable shear load = 3560 lbs = 3.56 k (Reference 2, Table No. 26-E)

Check unity equation: 1.3/ 4.50 + 1.7/3.56 (<) or (=) to 1.0
0.29 + 0.48 = 0.77 < 1.0 .....ok

Provide a minimum of 5 - 3/4" dia. A 307 anchor bolts w/ 5" embedment, evenly spaced starting 2" from the edge of the equipment skid. Provide a minimum of 1.25 " from the edge of the steel base, typical each side of the skid.

Provide (2), 1/4 " stiffener plates between the flanges of the skid beams at each anchor bolt location.

Alternate Anchor Bolt Design:

Provide a minimum of (10) 1/2" dia. expansion anchors w/ 3-1/2" minimum embedment.

Per GC-ANCR-01, Rev 0, Table 21:

Allow. shear = 1,470 lbs > 7,400 lbs /10 bolts = 740 lbs/bolt
Allow. tension = 2,250 lbs No Uplift (See Below)

Net uplift(+) = -18,800 * 0.85/ 10 bolts + 7,400 *30/78*5bolts
= -1,589 + 573 = -1016 lbs down

MRC 5/13/96 1

KAISER ENGINEERS
HANFORD

DESIGN ANALYSIS

Calc. No. W320-24-021
Revision 0
Page No. 16 of 18

Client WHC
WO/Job No. W320/ER-4319
Subject MISC. MECHANICAL (HVAC) EQUIP. FOUNDATION - EXHAUST AIR CLEANUP TRAIN
Date 7/27/94 By M.R. CUSTER MRC
Checked 9/27/94 By RLB
Location TANK 241-C-106
Revised By

SUMMARY - FOUNDATION LOADS & LOCATIONS:

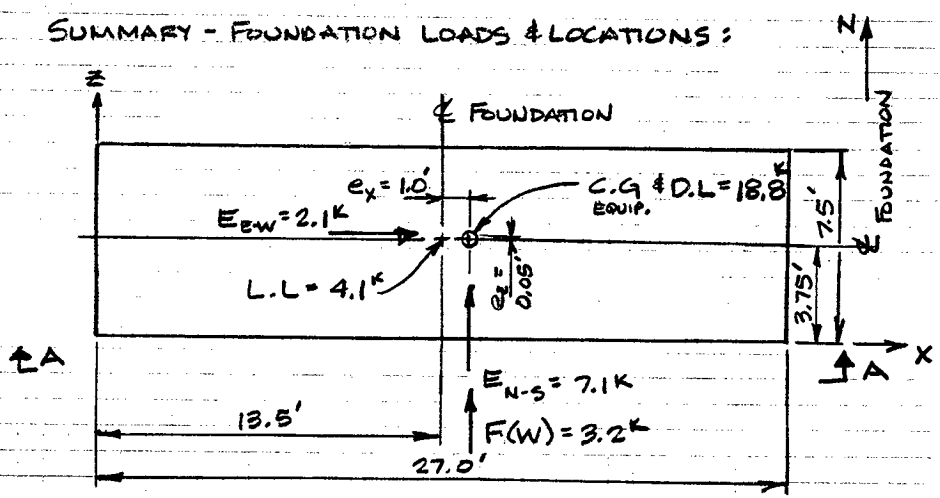

FIGURE 1

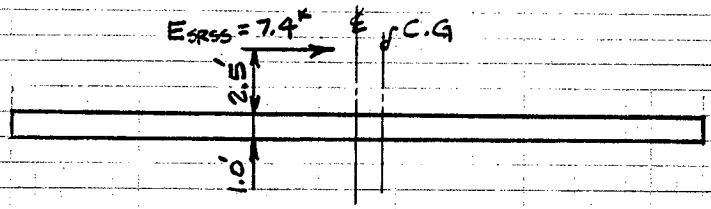

SECTION A-A

KAISER ENGINEERS
HANFORD

DESIGN ANALYSIS

Calc. No. W320-24-021
Revision 0
Page No. 17 of 18

Client WHC
WO/Job No. W320/ER-4319
Subject MISC. MECHANICAL (HVAC) EQUIP. FOUNDATION - EXHAUST AIR CLEANUP TRAIN
Date 7/27/94 By M.R. CUSTER MRC
Checked 9/27/94 By JRB
Location TANK 241-C-106
Revised By

LOADS ON FOUNDATION:

DEAD, LIVE AND SEISMIC LOADS

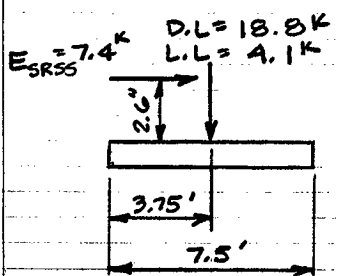

FIGURE 2

DEAD, LIVE AND WIND LOADS

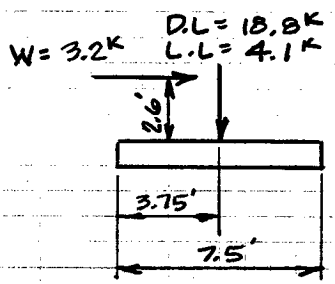

FIGURE 3

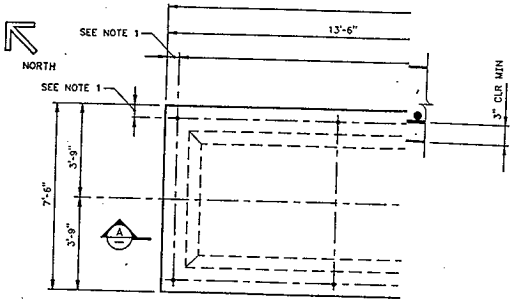

PLAN - 1

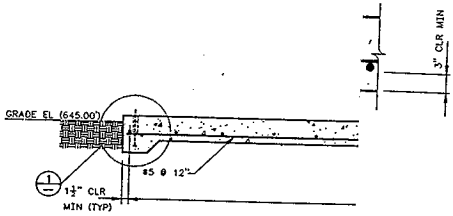

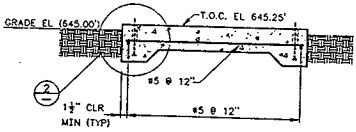

B SECTION
SCALE: 1/2"=1'-0"

NOTES:

1. VERIFY FOUNDATION SIZE WITH VENDOR EQUIPMENT DRAWINGS AND PROVIDE A MINIMUM 6" CLEARANCE FROM EDGE OF CONCRETE.
2. VERIFY LOCATION/ANCHOR BOLT SIZE W/ VENDOR INFORMATION/DRAWINGS PRIOR TO CONCRETE PLACEMENT.

EXPIRES 03-03-96

DESIGNED PC BRINKMAN DATE	SAFETY CLASS 3		USE PRELIMINARY
DRAWN CHGR			EDT
CHECKED	U.S. DEPARTMENT OF ENERGY RICHLAND OPERATIONS OFFICE ICF KAISER HANFORD COMPANY		
SAFETY SEE DR/AT FORM			
CNTR SEE DR/AT FORM	STRUCTURAL MISC HVAC, ELECT CONC PADS PLANS, SECTS & DETS		
QUAL CHKR SEE DR/AT FORM			
LEAD ENGR			
REVISION NO. 17 DATE 12/28/95	PROJECT W-320 TANK 241-C-106 SLUICING		
APPROVALS FOR IMPLEMENTATION	DSGN F	DWG NO. 200E	SHEET NO. 0900	DWG NO. H-2-818458	REV NO. 0
BY FOR WHC DATE	SCALE SHOWN	JOB NO. ER4319	SHEET 2 OF 3

FLUOR DANIEL NORTHWEST, INC.

DESIGN ANALYSIS

Calc. No. W320-24-021
Revision 2
Page No. 19 of —

Client Numatec
WO/Job No. W-320
Subject Misc Mechanical (HVAC)
Date 2/5/98 By Ann Slangerin
Equip Fdn - Vacuum Pump Cabinet
Checked 2/6/98 By Michael Rusty
Location Tank 241-C-106
Revised By

The Vacuum Pump Cabinet Pad was added at the end of the exhaust air cleanup pad by ECN W-320-692, due to insufficient space on the main slab.
Analyze the foundation and anchorage.

Equipment
Dead load = 600 lb Air Monitor Corp. Sketch W31912AA

Slab DL = $(3.5')(4.5')(0.67')(150\ lb/ft^3)$ = 1583 lb

Seismic = $0.375(W_p) = 0.375(600) = 225$ lb (see p. 6)
Factor for SRSS $225\left(\frac{7.4}{7.1}\right) = 235$ lb (See p. 6)

Wind = $30.4\ lb/ft^2\ (44")(28.5")/144 = 264$ lb

Wind Controls.

Snow = $20\ lbs/ft^2\ (36")(30")/144 = 150$ lb.

Worst case load combination for anchorage and foundation design is

DL + WL

FLUOR DANIEL NORTHWEST, INC.

DESIGN ANALYSIS

Calc. No. W320-24-021
Revision 2
Page No. 20 of –

Client Numatec
WO/Job No. W-320
Subject Misc Mechanical (HVAC)
Date 2/5/98 By AS Langevin
Equip Fdn - Vacuum Pump Cabinet
Checked 2/6/98 By Michael R Curtis
Location
Revised By

Vacuum Pump Cabinet - Check Anchorage due to Wind in Worst Case Direction.

Anchorage -

Neglect DL - conservative

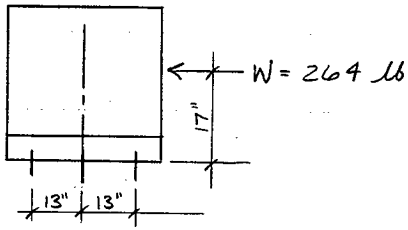

$$T = \frac{264\ lb\,(17")}{(26")(2\ bolts)}$$

$$T = 86\ lb/bolt$$

$$V = 264\ lb/6\ bolt = 44\ lb/bolt.$$

Bolts are ½"ϕ w/ 2¼" min embedment

$T_a = 1358\ lb$
$V_a = 1468\ lb$ → GC-ANCR-01 Table 21

$$\frac{T}{T_a} + \frac{V}{V_a} = \frac{86}{1358} + \frac{44}{1468} = 0.09 < 1.0$$

Loads on anchor bolts are very small
∴ Anchorage OK
(6) ½"ϕ exp anchors with 2¼" min emb.

FLUOR DANIEL NORTHWEST, INC.

Calc. No. W320-24-021
Revision 2
Page No. 21 of —

DESIGN ANALYSIS

Client Numatec WO/Job No. W-320
Subject Misc Mechanical (HVAC) Equip Fdn - Vacuum Pump Cabinet Date 2/5/98 By Ann Shangerin
Checked 2/6/98 By Michael R Custer
Location Tank 241-C-106 Revised By

Vacuum Pump Cabinet Slab

Check for overturning

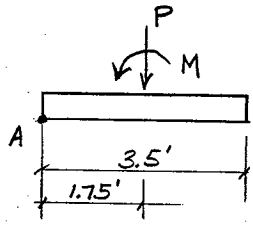

$M = 264\ lb\left(\frac{17''}{12}\right) = 374\ lb\text{-}ft$

$P = (600\ lb + 1583\ lb)$

$P = 2183\ lb$

Overturning about pt. A:

$SF = \frac{(0.85)P(1.75')}{M} = \frac{1855(1.75)}{374} = 8.7 > 1.5$ OK

$e = \frac{M}{P} = \frac{374}{2183} = 0.17' = 2''$ ∴ Result is within the middle third OK

Max Soil Pressure:

$p_{max} = \frac{M}{S} + \frac{P}{A} = \frac{374\ lb\text{-}ft}{(4.5)(3.5)^2/6} + \frac{2183\ lb + 150\ lb}{(3.5)(4.5)}$ → include snow

$= 41 + 148$

$p_{max} = 190\ psf$ soil pressure very small - OK

Slab Bending Moment:

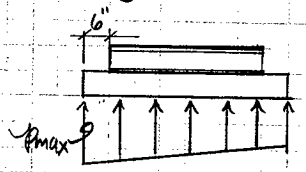

$M_1 = (190psf)(0.5')^2/2$

$= 24$ ft-lb very small

In other direction - (use same p_{max})

$M_2 = (190)(3')^2/12 = 143$ ft-lb - also very small

→ span between supports

Use min steel #4@12 $\rho = \frac{(0.20)}{12(8)} = 0.002 > 0.0018$ OK

FLUOR DANIEL NORTHWEST, INC.				ENGINEERING CHANGE NOTICE SKETCH	
Dwg	Sh	Rev	Prepared By	Checked By	ECN No	Page
-2-818458	2	1	BA MEYER		W-320-692	8/7/13

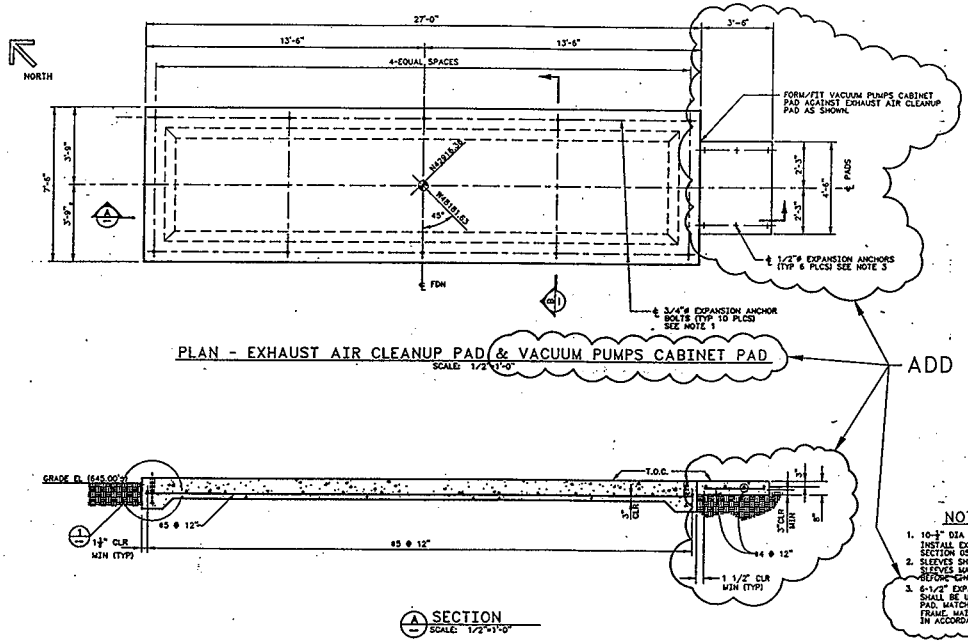

NOTES:

1. 10-$\frac{3}{4}$" DIA EXP. ANCHORS W/3$\frac{3}{4}$" MIN EMBEDMENT INSTALL EXP ANCHORS IN ACCORDANCE WITH SPEC. SECTION 05055.
2. SLEEVES SHALL BE 16 GA. MINIMUM SHEET METAL OR PLASTIC SLEEVES MANUFACTURED FOR THE PURPOSE. FILL WITH GROUT BEFORE GRAU PRACTICAL.
3. 6-1/2" EXPANSION ANCHORS W/ 2 1/4" MIN EMBEDMENT SHALL BE USED TO INSTALL VACUUM PUMPS CABINET SKID ON PAD. MATCH HOLE LOCATIONS ON VACUUM PUMPS CABINET SKID FRAME. MAINTAIN ℄ 3/4" MIN EDGE DISTANCE. INSTALL ANCHORS IN ACCORDANCE WITH SPEC. SECTION 05055.

Originator: Allongerman
Checker: Michael Scutty
2/5/98
2/6/98

HNF-2467, Rev.0

W320-24-021
Rev. 2
Page 22

T SCALE: 1=12 CAD FILE: C018

W320-24-022

Service Building Foundation

KAISER ENGINEERS
HANFORD

	CALCULATION IDENTIFICATION AND INDEX	Page i of iii Date 03/28/94

This sheet shows the status and description of the attached Design Analysis sheets.

Discipline Civil WO/Job No. W-320/ER4319 Calculation No. W320-24-022

Project No. & Name PROJECT W-320, TANK 241-C-106 WASTE RETRIEVAL

Calculation Item Service Building Foundation

These calculations apply to:

Dwg. No. H-2-818452 (2 SH) Rev. No. 0

Dwg. No. Rev. No.

Other (Study, CDR) Rev. No.

RONALD W. DAVIDSON STATE OF WASHINGTON 24180 REGISTERED PROFESSIONAL ENGINEER

The status of these calculations is:

[ ] Preliminary Calculations

[X] Final Calculations

[ ] Check Calculations (On Calculation Date)

[ ] Void Calculation (Reason Void) EXPIRES 03/03/94

Incorporated in Final Drawings? [X] Yes [ ] No

This calculation verified by independent "check" calculations? [ ] Yes [X] No

Original and Revised Calculation Approvals:

	Rev. 0 Signature/Date	Rev. 1 Signature/Date	Rev. 2 Signature/Date
Originator	Michael R Carter 4/19/94	R W Davidson 8/3/95	
Checked by	James R Booth 4/26/94	James R Booth 8/3/95	
Approved by	R W Davidson 4/29/94	R W Davidson 8/3/95	
Checked Against Approved Vendor Data	R W Davidson 4/29/94	R W Davidson 8/3/95	

INDEX

Design Analysis Page No.	Description
i	Calculation Identification and Index
ii	Calculation Cross Index
iii	Design Verification Screening Criteria
1-2	OBJECTIVES; CRITERIA; DATA; ASSUMPTIONS; METHODS; REFERENCES; CALCULATIONS; CONCLUSIONS
3-16	DESIGN CALCULATIONS
APPENDICES	Attachment A- BUTLER, Panel Line Bldg Base Channel Install.

REV 1: CONCLUSION REVISED FOR FDN MODS BASED ON VENDOR APPROVAL DATA FOR BUILDING FRAME INSTALLATION. ATTACHMENT "A" ADDED. REPLACED SH 16 SEE ECN # W-320-103.

CALCULATION CROSS INDEX (Typical)

Subject Calculation No. W320-24-022

Subject Calculation Revision No.	Superceded by Calculation No.	These interfacing calculation/documents provide input to the subject calculation, and if revised may require revision of the subject calculation.		Results and conclusions of the subject calculation are used in these interfacing calculations and/or documents.		Does the output interface calculation/ documents require revision?		Has the output interface calculation/ documents been revised?		Discipline manager's signature and date indicating evaluation complete.
		Calculation/Document No.	Revision No.	Calculation/Document No.	Revision No.	Yes	No	Yes	No	
0	—			H-2-818452	0		✓		✓	[signature] 4/29/94

HNF-2467, Rev.0

KEH 1975.00 (12/88)

DESIGN VERIFICATION SCREENING CRITERIA

Project/Document No. W-320, CALCULATION W320-24-022

When the design or design change affects hardware, formal design verification must be performed if one or more of the following questions must be answered affirmatively (YES).

YES	NO		
	✓	1.	Does the design or design change involved meet the established criteria to be considered Safety Class 1 or 2?
	✓	2.	Does this design or design change cause or permit changes to Safety Class 1 or 2 instrument or alarm setpoints outside of previously approved operational limits?
	✓	3.	Does this design or design change significantly affect the nuclear safety consequences of a malfunction or failure of the structure, system, or component?
	✓	4.	Does this design or design change involve or change design that has previously undergone formal design verification?

Assigned Lead Engineer — Date: 4/29/94

Responsible Discipline Manager — Date: 4/29/94

Original Design Package Distribution:
- Project Engineer
- Chief Design Engineer
- Engineering Document Control

Design Change Distribution:
- Attach to Engineering Change Notice

KAISER ENGINEERS HANFORD

Calc. No. W320-24-022
Revision 0
Page No. 1 of 16

DESIGN ANALYSIS

Client WHC
Subject Service Building Foundation
Location TANK 241-C-106

WO/Job No. W-320/ER-4319
Date 03/28/94 By M.R Custer MRC
Checked 4/26/94 By JR Booth JRB
Revised By

OBJECTIVE:

The objective of this calculation is to provide the detailed design of the building foundation for the Service Building. The design of the foundation shall be performed in accordance with ACI-318 (strength design) and the Uniform Building Code (1991), as required by the project design criteria, SDC-4.1, Rev. 11. In order for the foundation design to proceed, a conservative estimate of the building loads and reactions will be developed, since the building enclosure will be provided later, under a separate purchase specification.

CRITERIA:

1. DOE ORDER 6430.1A (04/06/89)
2. HANFORD PLANT STANDARDS, STANDARD ARCH./CIVIL DESIGN CRITERIA, SDC-4.1, REV.11
3. FUNCTIONAL DESIGN CRITERIA, WHC-SD-W320-FDC-001, REV.2
4. LETTERS OF INSTRUCTION:
5. ASCE 7-88

DATA:

1. The equipment, structure and foundation for the Service Building is Safety Class 3 per Reference 7.

ASSUMPTIONS: NONE

METHODS:

Hand calculations

REFERENCES:

1. ACI 318-91, Building Code Requirements for Reinforced Concrete
2. Uniform Building Code (UBC), (1991 Edition)
3. ASTM A36-91
4. HANFORD PLANT STANDARDS, STANDARD ARCH./ CIVIL DESIGN CRITERIA, SDC-4.1, REV.11.
5. WHC-SD-WM-SEL-033, REV.0-C, Interm Safety Equipment List for 241-C-106 WASTE RETRIEVAL
6. AWS D1.1-92
7. Foundation Analysis and Design, Joesph E. Bowles (1st Edition)
8. ASCE 7-88 (American Society of Civil Engineers Standard), Minimum Design Loads for Buildings and Other Structures

KAISER ENGINEERS HANFORD

Calc. No. W320-24-022
Revision 01
Page No. 2 of 16

DESIGN ANALYSIS

Client WHC
Subject Service Building Foundation
Location TANK 241-C-106

WO/Job No. W-320/ER
Date 03/28/94 By M.R Custer MRC
Checked 4/26/94 By JR Booth JRB
Revised 8/3/95 By Rick Davidson RD

CALCULATIONS:

Refer to the Design Calculations section

CONCLUSIONS:

The foundation for the Service Building is designed as a mat type foundation, however, the UBC code as well as the Hanford Plant Standards (SDC-4.1) requires that a foundation wall be provided, which extends below the frost line to a minimum depth of 30 inches. This requirement has been incorporated in the final design. The foundation loads developed in the calculation are minimal, based on the large, physical area required by the piping and equipment, housed inside the building enclosure. The design satisfies the design requirements for the structure.

⚠ JRB 8/3/95

Based on a review of vendor approval data of building erection instructions, the current fdn design does not match vendor proposed pre-engineered bldg type. Fdn calculations were based on use of a Butler Panel Frame building system. Vendor has discontinued this line and proposes use of a Panel Line-1 self-framing building system.
Fdn dimensions will match ouside dimensions of building footprint. Width of fdn now 9'-4" was 8'-6" and length now 10'-8" was 10'-0". Other modifications to fdn design require deletion of base plate pedestal and anchor bolts.
Panel frame system is to be attached with vendor supplied hardware to fdn curb with 3/8" dia x 2 1/2 " long expansion anchors at 1'-6" intervals along top face of 8" curb using a base channnel/flashing system.
Calculations provided adequately envelope above changes to fdn design. No further analysis is required.

KAISER ENGINEERS
HANFORD

Calc. No. W320-24-022
Revision 0
Page No. 3 of 16

DESIGN ANALYSIS

Client WHC
WO/Job No. W320/ER-4319
Subject SERVICE BUILDING FOUNDATION
Date 4/11/94 By MICHAEL R. CUSTER MRC
Checked 4/26/94 By JRB
Location TANK 241-C-106
Revised By

FOUNDATION DESIGN REQUIREMENTS

- MINIMUM DEPTH TO THE BOTTOM OF FOUNDATION OF PERMANENT STRUCTURES BELOW FINISHED GRADE IS 2'-6". (REFERENCE 4)
- ALLOWABLE SOIL PRESSURE PER CHAPTER 29 UBC, (REFERENCE 2), 1500 lb/FT^2
- COEFFICIENT OF SLIDING = 0.25 (REFERENCE 2)
- MINIMUM FOOTING DIMENSIONS PER REFERENCE 2 AS FOLLOWS:
  - THICKNESS OF CONCRETE FOUNDATION WALL, 6"
  - WIDTH OF FOOTING, 12"
  - THICKNESS OF FOOTING, 6"
  - DEPTH BELOW UNDISTURBED GROUND, 12"
  - MINIMUM SLAB THICKNESS (PLAIN CONCRETE), 3½" REFERENCE 2.
- LOAD COMBINATIONS: (REFERENCE 2 & 4)

$U = 1.4D + 1.7L$ (MINIMUM DESIGN REQUIREMENTS)

$U = 0.75(1.4D + 1.7L + 1.7W)$ (WIND)

$U = 0.9D + 1.3W$

$U = 0.75(1.4D + 1.7L + 1.87E)$ (SEISMIC)

IN ADDITION: IF EARTHQUAKE LOADS INCLUDED IN DESIGN, LOAD COMBINATIONS OF SECTION 2609(c)(2), REFERENCE 2, APPLY EXCEPT (1.1E) IS SUBSTITUTED FOR (W).

$U = 0.75(1.4D + 1.7L + 1.87E)$

$U = 0.9D + 1.43E$

54-4300-037 KEH-0037.00 (06/92)

KAISER ENGINEERS
HANFORD

DESIGN ANALYSIS

Calc. No. W320-24-022
Revision 0
Page No. 4 of 16

Client WHC
Subject SERVICE BUILDING FOUNDATION
Location TANK 241-C-106

WO/Job No. W320/ER-4319
Date 4/11/94 By MICHAEL R. CUSTER MRC
Checked 4/26/94 By JRB
Revised By

ALSO, FOR EARTHQUAKE LOADING, USE THE FOLLOWING:

$U = 1.4(D+L+E)$

$U = 0.9D \pm 1.4E$

BUILDING DESIGN REQUIREMENTS/LOADS

- ROOF DEAD LOAD, 20 lb/ft² (REFERENCE 4)
  - ROOF COVERING, 50 lb/ft² OR 200 lb CONCENTRATED LOAD.
  - PRIMARY FRAMING AND PURLINS, 20 lb/ft²
- SNOW / LIVE LOAD, 20 lb/ft² (REFERENCE 4)
- WIND LOAD,

BASIC WIND SPEED, 70 mi/h
IMPORTANCE FACTOR, 1.07
EXPOSURE CATEGORY, C

$q_z = 0.00256 K_z (IV)^2$ (REFERENCE 8)

$q_z = 0.00256 (0.80)[1.07(70)]^2$

$q_z = 11.5$,

CONSERVATIVELY,

$F = q_z G_h C_f A_f$ { NORMALLY, FORCES DETERMINED USING $p = q_z G_h C_p - q_h (GCP_i)$, HOWEVER SINCE ROOF PITCH IS NEGLIGIBLE RESULTS ARE BASICALLY THE SAME AS REQ'D BY THIS

$= 11.5(1.32)(1.4)A_f$

$F = 21.3 A_f$, $F_V = 21.3(8' \times 10') = \underline{1704}^{\#}$, $F_H = 21.3(10 \times 10') = \underline{2130}^{\#}$

ESTIMATE DEAD LOAD OF BUILDING ENCLOSURE:

$W_{DL(BLDG)} = [30(2)(5\,lb/ft)] + [(8)(10')(2\,lb/ft) + (8)(8')(2\,lb/ft)] + [(5)(10')(2\,lb/ft)] + [2(10')(10') + 2(10')(8') + (8)(10')]1.5\,lb/ft^2 =$

(2) MAIN FRAMES (GIRTS) PURLINS

$W_{DL(BLDG)} = 1348^{\#}$, SAY $\underline{1.5^K}$

ROOF LIVE LOAD:

$L_R = 20\,lb/ft^2(10 \times 8) = 1600\,lb$ OR $\underline{1.6K}$

KAISER ENGINEERS
HANFORD

DESIGN ANALYSIS

Calc. No. W320-24-022
Revision 0
Page No. 5 of 16

Client WHC
Subject SERVICE BUILDING FOUNDATION
Location TANK 241-C-106

WO/Job No. W320/ER-4319
Date 4/11/94 By MICHAEL K. CUSTER
Checked 4/26/94 By QRB
Revised By

DEAD LOAD, EQUIPMENT & PIPING:

- AIR COMPRESSOR, 780 lb
- AIR DRYER, 70 lb

$W_{DL} = W_{AC} + W_{AD} + W_{PIPE} =$

$W_{DL} = 780 + 70 + (4\ lb/ft \times 14) = 906\ lb$ SAY 1K

DEAD LOAD, FOUNDATION (BASED ON 8'x10' BLDG DIM.)

$t_c = 3''$ COVER $+ 5'' = 8''$ (MIN. THICKNESS 3½, PER REFERENCE 2)

$W_{C_{SLAB}} = 8''/12 \times 8 \times 10 \times 150\ lb/ft^3 =$

$W_{C_{SLAB}} = 8000\ lb = 8.0K$

$W_{C_{WALL}} = 2[(2.3' \times 1.0' \times 10') + (2.3 \times 1.0' \times 6.0')]\ 150\ lb/ft^3 =$

$W_{C_{WALL}} = 11{,}040\#$, SAY 11K

$W_{TC} = 8K + 11K = 19K$

TOTAL DEAD LOADS

$W_T = W_{BLDG} + W_{FOUND} + W_{EQUIP} =$

$= 1.5K + 19.0K + 1K$

$W_T = 21.5K$, SAY 22K

KAISER ENGINEERS
HANFORD

DESIGN ANALYSIS

Calc. No. W320-24-022
Revision 0
Page No. 6 of 16

Client WHC
Subject SERVICE BUILDING FOUNDATION
Location TANK 241-C-106

WO/Job No. W320/ER-4319
Date 4/11/94 By MICHAEL R. CUSTER
Checked 4/26/94 By
Revised By

EARTHQUAKE LOADS (BLDG)

BUILDING, SAFETY CLASS 3

BASE SHEAR, $V = \frac{ZIC}{R_W} W$ WHERE,

$Z = 0.20$ (REFERENCE 2)
$I = 1.25$ (REFERENCE 4)
$C = 2.12$ (REFERENCE 4)
$R_W = 6$ (REFERENCE 2)

$E_{N-S} = V_{N-S}$ (100% MAX.)
$E_{E-W} = V_{EW}$ (30% MAX.)
} (REFERENCE 2)

$SRSS = \sqrt{E_{N-S}^2 + E_{E-W}^2}$

WEIGHT OF BLDG = 1.5^K

$E_{N-S} = V_{N-S} = \left[0.20(1.25)(2.12)/6\right] W_{BLDG} = 0.13^K$

$E_{E-W} = V_{E-W} = \left[0.20(1.25)(2.12)/6\right] W_{BLDG}(.3) = 0.03^K$

$E_{BLDG\ SRSS} = \sqrt{0.13^2 + 0.03^2} = 0.13^K$

EARTHQUAKE LOADS (BLDG & FOUND.)

$E_{N-S} = V_{N-S} = \left[0.20(1.25)(2.12)/6\right] W_{BLDG\ \&\ FOUND} = 2.0^K$

$E_{E-W} = V_{N-S} = \left[0.20(1.25)(2.12)/6\right] W_{BLDG\ \&\ FOUND.}(.3) = 0.60^K$

$E_{SRSS} = \sqrt{2.0^2 + 0.60^2} = 2.1^K$

KAISER ENGINEERS
HANFORD

Calc. No. W320-24-022
Revision 0
Page No. 7 of 16

DESIGN ANALYSIS

Client	WHC	WO/Job No. W320/ER-4319	
Subject	SERVICE BUILDING FOUNDATIONS	Date 4/11/94 By MICHAEL R. CUSTER	MRC
		Checked 4/26/94 By GLB	
Location	TANK 241-C-106	Revised By	

DETERMINE GOVERNING LOAD COMBINATION FOR BLDG:

1) D + L + (ROOF LIVE LOAD OR SNOW LOAD)
2) D + L + W OR E
3) D + L + W + SNOW/2
4) D + L + SNOW + W/2
5) D + L + SNOW + E

1) U = 1.7 + 1.6 = 3.3
2) U = 1.7 + 1.7 + 2.1 (10/8) OR .13 (10/10) = 6.0 OR 3.5
3) U = 1.7 + 1.7 + 2.1 (10/8) + 1.6/2 = 6.8 ←
4) U = 1.7 + 1.6 + [1.7 + 2.1 (10/8)/2] = 6.3
5) U = 1.7 + 1.6 + 0.16 (10/10) = 3.5

MAX. BUILDING REACTIONS. LOAD COMBINATION (3)

FOUNDATION DESIGN:

THE BUILDING LOADS MAY BE SUPPORTED AT THE FOUR CORNERS ON INDEPENDENT FOUNDATIONS OR ON A MAT FOUNDATION. DUE TO THE MAGNITUDE AND SYMMETRY OF THE LOADS AND REQUIRED CONFIGURATION BY UBC. THE MINIMUM SIZE OF THE FOUNDATION SLAB HAS BEEN DEFINED, BASED ON THE REQUIRED PHYSICAL AREA, 8'×10'. (EAVE HEIGHT OF BLDG. 10 FT)

THE FOUNDATION DESIGN WILL BE A MAT DESIGN WITH A PERIMETER WALL TO A DEPTH OF 2'-6" (FIG. 1)

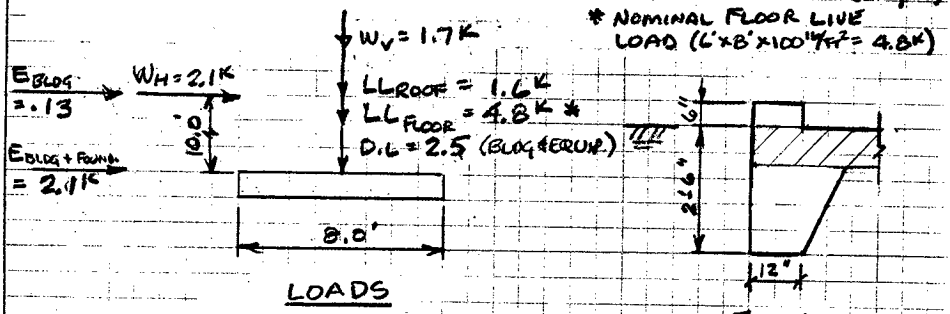

KAISER ENGINEERS
HANFORD

DESIGN ANALYSIS

Calc. No. W320-24-022
Revision 0
Page No. 8 of 16

Client	WHC	WO/Job No. W320/ER-4319	MRC
Subject	SERVICE BUILDING FOUNDATION	Date 4/11/94 By MICHAEL R. CUSTER	
		Checked 4/26/94 By JRB	
Location	TANK 241-C-106	Revised By	

FOUNDATION DESIGN (CONT.)

FOUNDATION STABILITY:

A) SLIDING: COEFFICIENT = 0.25 (REFERENCE 2, pg 590)

$$SF_{\substack{SLIDING\\(WIND)}} = \frac{R_{LS}}{F_H} = \frac{.25(22)}{2.1} = 2.6 > 1.5 \ldots \text{O.K}$$

OR

$$SF_{\substack{SLIDING\\(SEISMIC)}} = \frac{.25(22)}{2.1} = 2.6 > 1.5 \ldots \text{O.K}$$

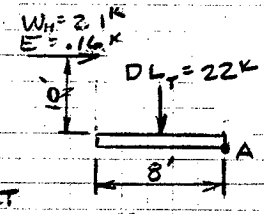

Fig. 2

NOTE: FOUNDATION WALL PORTION NOT REQUIRED FOR LATERAL SUPPORT

B) OVERTURNING (OT):

$$S.F_{OT} = \frac{22^K(4')}{2.1^K(10')} = 4.2 > 1.5 \ldots \text{O.K}$$

OR

$$S.F_{OT} = \frac{22^K(4')}{.16^K(10')} = 55.0 > 1.5 \ldots\ldots \text{NEGLIGIBLE}$$

LOAD COMBINATIONS (FACTORED LOADS): FOUNDATION DESIGN

1) $U = 1.4D + 1.7L$
2) $U = 0.75(1.4D + 1.7L + 1.7W)$
3) $U = 0.9D + 1.3W$
4) MODIFIED FORMULA 9-2, PER REFERENCE 2, SECTION 2609.C.3

$$U = 0.75(1.4D + 1.7L + 1.1E)$$

5) MODIFIED FORMULA 9-2, PER REFERENCE 2, SECTION 2625.4, pg. 522.

$$U = 1.4(D + L + E)$$

KAISER ENGINEERS
HANFORD

DESIGN ANALYSIS

Calc. No. W320-24-022
Revision 0
Page No. 9 of 16

Client	WHC	WO/Job No. W320/ER-4319	MRC
Subject	SERVICE BUILDING FOUNDATION	Date 4/11/94 By MICHAEL R. CUSTER	
		Checked 4/26/94 By JCB	
Location	TANK 241-C-106	Revised By	

FOUNDATION LOADS: (CONT.)

6) MODIFIED 9-3, PER REFERENCE 2, SECTION 2625.4, PG. 522

$U = 0.9D \pm 1.4E$

$W_1 = \frac{2.1^K(10)}{8} + 1.7^K$

$W = 4.3^K$

$E = \frac{.13^K(10')}{8} = 0.16^K$

DETERMINE MAXIMUM DESIGN VALUE FOR "U":

$D.L = (8''/12)(8')(10')(150^{lb}/ft^3) + 1.5 + 1.0 = 10.5^K$, SAY 11^K

EVALUATE:

1) $U = 1.4(11) + 1.7(1.6 + 4.8) = 26.3^K$ ← GOVERNS
2) $U = 0.75[1.4(11) + 1.7(6.4) + 1.7(4.3)] = 25.2^K$
3) $U = 0.9(11) + 1.3(4.3) = 15.5^K$
4) $U = 0.75[1.4(11) + 1.7(6.4) + 1.1(.16)] = 19.8^K$
5) $U = 1.4(11 + 6.4 + .16) = 24.6^K$
6) $U = 0.9(11) \pm 1.4(.16) = 10.1^K$

DETERMINE FOUNDATION SIZE (CHECK):

$q_e = 2^K/ft^2 - 8''/12(150^{lb}/ft^3)(1^K/1000^{lb}) = 1.9$ KSF

$A_{REQ'D} = \frac{D.L + L.L}{q_e} = \frac{(1.0 + 1.5) + (1.6 + 4.8)}{1.9} = 4.7\ ft^2 < 80\ ft^2$ ... OK

$M = 2.1 \times 10 = 21^{K-1}$ (WIND MOMENT)
$P = 8.9^K$ (D+L) FROM PG. 7

DETERMINE BEARING PRESSURE CONSIDERING LOCATION OF KERN:

$e = \frac{M}{V} = \frac{21^{K-1}}{8.9^K} = 2.36\ FT$, $\frac{W}{6} = \frac{8}{6} = 1.3'$ (LOCATION OF KERN)

SINCE $e = 2.36' > 1.3'$, RESULTANT IS OUTSIDE KERN

KAISER ENGINEERS
HANFORD

Calc. No. W320-24-07
Revision 0
Page No. 10 of 16

DESIGN ANALYSIS

Client	WHC	WO/Job No. W320/ER-4319	MKC
Subject	SERVICE BUILDING FOUNDATION	Date 4/11/94 By MICHAEL E. CUSTER	
		Checked 4/26/94 By JRB	
Location	TANK 241-C-106	Revised By	

DETERMINE q_{MAX} FROM THE FOLLOWING (SEE FIG. 3)

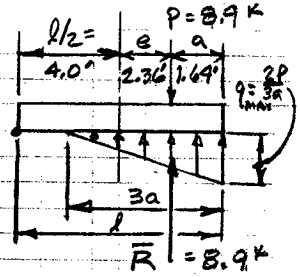

FIG. 3

$$R(l/2+e) = 8.9^{K}(4^{FT}) + 21^{K\text{-}I}$$

$$R(4+2.36') = 56.6^{K\text{-}I}$$

$$R = 8.9^{K} \text{ @ } 6.36^{FT} \text{ FROM POINT A}$$

$$q_{MAX} = \frac{2P}{3ab} = \frac{2(8.9^{K})}{3(1.64)(10')} = 0.36^{KSF} < 1.9\ KSF \quad \ldots OK$$

CHECK BEAM AND PUNCHING SHEARS AND DESIGN REINFORCING REQUIREMENTS: (REF. FIG. 4)

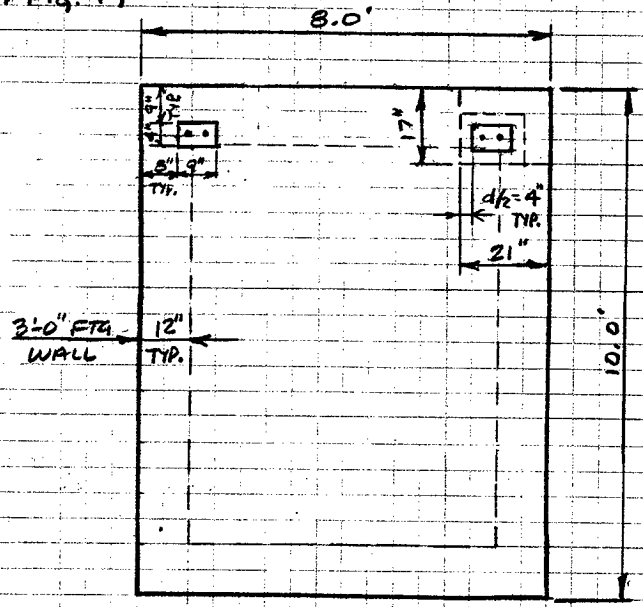

FIG. 4

KAISER ENGINEERS
HANFORD

Calc. No. W320-24-022
Revision 0
Page No. 11 of 16

DESIGN ANALYSIS

Client	WHC	WO/Job No. W320/ER-4319	MKC
Subject	SERVICE BUILDING FOUNDATION	Date 4/11/94 By MICHAEL R. CUSTER	
		Checked 4/26/94 By JRB	
Location	TANK 241-C-106	Revised By	

CHECK PUNCHING SHEAR: (TYP., SEE FIG.5)

DEPTH OF SLAB = 8" - (3" COVER) = 5"
PERIMETER AT EACH CORNER = $2b_1 + 2b_2$

$b_1 = 2[2(5''/2) + 9''] = 28'' = 2.3\ FT$

$b_2 = 2[2(5''/2) + 4''] = 18'' = 1.5\ FT$

$A_{PUNCHING} = 2.3 \times 1.5 = 3.45\ FT^2$

$q_u = \frac{26.3^K}{8 \times 10} = 0.33\ KSF$

$V_u = (80.0 - 3.45 FT^2)(0.33\ KSF) = 25.3^K$

$d_{REQ'D} = \frac{V_u}{\phi 4 \sqrt{f'_c}\, b_o} = \frac{25{,}300^{lb}}{.85(4)\sqrt{4000}(46'')} =$

$d_{REQ'D} = 2.6'' < 5.0'', \ldots, OK$

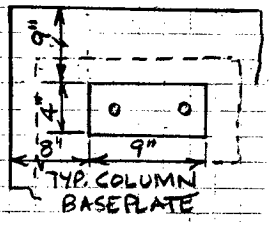

FIG. 5

CHECK BEAM SHEAR: (SEE FIG.6)

WIDTH OF FOUNDATION = 8'
LENGTH OF FOUNDATION = 10'

$V_u = (8.0')(3.2')(0.33\ KSF) = 8.5^K$

$d = \frac{V_u}{\phi 2 \sqrt{f'_c}\, b_o} = \frac{8500^{lb}}{.85(2)\sqrt{4000}(96'')}$

$d = 0.82'' < 5.0'', \ldots OK$

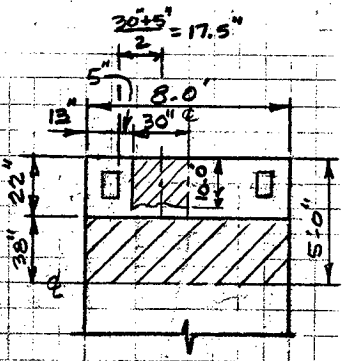

FIG. 6

DETERMINE SLAB REINFORCEMENT REQUIREMENTS:

M_u; SHORT DIMENSION

$M_u = 38''/12\,(8.0')(.33\ KSF)[38''/12(2)] = 13.2\ K\text{-}'$

OR $M_u = \frac{w_u l^2}{8} = \frac{1.65\ K/FT\ (8.0')^2}{8} = 13.2\ K\text{-}'$

BASED SHEAR / MOMENT DIAGRAMS: (FIG.7)

$M_u = 1/2(3.17')(5.23^K) - 1/2(1.36^K)(.83') =$

$M_u = 7.73\ K\text{-}'$

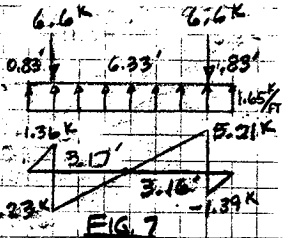

FIG. 7

KAISER ENGINEERS HANFORD

DESIGN ANALYSIS

Calc. No. W320-24-07? Revision 0 Page No. 12 of 16

Client	WHC	WO/Job No. W320/ER-4319	MRC
Subject	SERVICE BUILDING FOUNDATION	Date 4/11/94 By MICHAEL R. CUSTER	
		Checked 4/26/94 By JRB	
Location	TANK 241-C-106	Revised By	

M_u, LONG DIMENSION:

$$M_u = \frac{w\ell^2}{8} = \frac{1.32^{K/FT}(8')^2}{8} = 13.2^{K-1}$$

where $w_u = q_{max}(A)$
$\omega_u = (30+5+13/12)(.33\ KSF)$
$w_u = 1.32\ K/FT$

$$M_u = \frac{(30''+5'')}{12}(10.0')(.33^{KSF})\left(\frac{35''}{12(2)}\right) = 14.0^{K-1}$$

SEE FIG. 6, MOMENT "d" FROM FACE OF SUPPORT

$$\frac{M_u}{\phi bd^2} = \frac{14{,}000(12)}{0.9(120)(2.5)^2} = 248 \quad \left(\frac{M_u}{\phi bd^2} = 248,\ \rho = 0.0043\right)$$

1) IF $A_{s\,DESIGN}$ < REQ'D BY ρ_{min}, MAY PROVIDE $1.33A_{s\,DESIGN}$ ($\rho_{min} = .0033$)

2) $\rho = 0.0043(2.5'')(96'') = 1.0\ in^2$ / WIDTH OF 8 FT
OR $0.13\ in^2/FT$, (#5 @ 18" PROVIDES $0.21\ in^2/FT$)

3) TEMP/SHRINKAGE, $\rho = 0.0018$, $A_s = 0.43\ in^2$ / WIDTH 8.0 FT

USE #5 @ 18", 0.21 in^2/FT

WALL REINFORCEMENT: (FIG. 8) (WALL REIN. NOT REQ'D FOR HORIZONTAL LOADS, HOWEVER MINIMAL A_s WILL BE PROVIDED)

$M_E = 2.1^K(4'') = 8.4^{K-11}$

$R(\ell/2 + e) = 8.4''$

$R(15'' + 5) = 8.4^{K-11}$

$R = 0.42^K$

$$q_{max} = \frac{2(.42^K)}{3(10)(120)} =$$

$q_{max} = 0.0002\ KSI$

$q_{max} = 0.03^{KSF} < 1.9$, OK

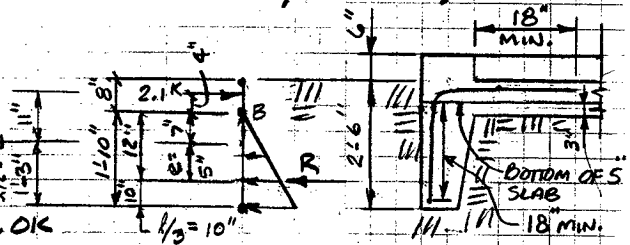

FIG. 8

$M_N = 0.03^{KSF}(1.83\ FT)(10.0\ FT)(1.0\ FT) = 0.55^{K-1}$ / 10 FT LENGTH

$M_u = 0.55^{K-1}(1.4) = 0.77^{K-1}$, $\frac{M_u}{\phi bd^2} = \frac{770(12)}{0.9(96)(6)^2} = 2.97$, $\rho < \rho_{min}$

USE $A_s = \rho bd$, where $\rho = 0.0012$
$A_s = (22'')(8'')(.0012) = 0.21\ in^2/FT$, #5 @ 18", $A_s \approx .21\ in^2/FT$ ... OK

KAISER ENGINEERS
HANFORD

DESIGN ANALYSIS

Calc. No. W320-24-002
Revision 0
Page No. 13 of 16

Client	WHC	WO/Job No. W320/ER-4319	MKC
Subject	SERVICE BUILDING FOUNDATION	Date 4/11/94 By MICHAEL R. CUSTER	
		Checked 4/26/94 By JRB	
Location	TANK 241-C-106	Revised By	

DETERMINE DEVELOPMENT LENGTH OF SLAB REINF. FOR BOTH POSITIVE AND NEGATIVE MOMENTS:

$$l_{db} = \frac{0.04 A_b f_y}{\sqrt{f'_c}}$$

(REFERENCE 2, SECTION 2612(C) pg. 469)

$$l_{db} = \frac{0.04(.307)(60{,}000)}{\sqrt{4000}}$$

$M_u = 16.5^{K\text{-}FT} = 198^{K\text{-}''}$

$M_n = \frac{M_u}{0.9} = 220^{K\text{-}''}$

$l_{db} = 11.6''$, providing $22''$

$l_{db_{min}} = 12''$

$l_d \le \frac{M_n}{V_u} + l_a,\ l_a = 12 d_b$

$l_{db} = 11.6$, provided $22 < 33''$ ... OK

$l_d = \frac{220^{K\text{-}''}}{8.5^K} + 12(.625)$

$l_d = 33''$ {REFERENCE 2 FORMULA 12-2

$l_{d_b} = 0.0004\, d_b f_y =$

$= 0.0004(.625)(60{,}000) = 15''$

$l_{d_{bmin}} = 15'' < 22'' < l_{d_{max}} = 33''$ .... OK, PROVIDE $l_{d_{min}} = 22''$

DESIGN GRADE BEAM:

W_u (WT. OF BEAM) $= 3.5FT(1FT)(150^{lb}/FT^3)/1000\,(1.4) = 0.7\ K/FT$

$M_u = 14.0^{K\text{-}'} + \frac{wl^2}{8} = 14.0^{K\text{-}'} + \frac{0.7(10')^2}{8} = 22.8\ K\text{-}FT$

$\rho_{min} = 200/f_y = 0.0033,\ \rho_{max} = 0.0214$

$\frac{M_u}{\phi b d^2} = \frac{22{,}800^{K\text{-}'}(12)}{0.90(6'')(19)^2} = 140 < 192.2,\ \rho_{min} = 0.0033$

$A_s = 0.0033(8)(19) = 0.50\ in^2,\ 2\text{-}\#5,\ A_s = 0.62\ in^2$

REMAINING AREA, DISTRIBUTE $A_s = .1A_s = .1(0.88) = 0.09\ in^2$
(PROVIDE 2-#4s @ TOP & MID-DEPTH)

KAISER ENGINEERS
HANFORD

DESIGN ANALYSIS

Calc. No. W320-24-022
Revision 0
Page No. 14 of 16

Client	WHC	WO/Job No.	W320/ER-4319
Subject	SERVICE BUILDING FOUNDATION	Date 4/11/94	By MICHAEL R. CUSTER
		Checked 4/26/94	By JRB
Location	TANK 241-C-106	Revised	By

BUILDING ANCHORAGE

REQUIREMENTS: (REFERENCE 2, TABLE 26E, pg. 547)

- ANCHOR TYPE, A-307
- MINIMUM EDGE DISTANCE, 6" (W/O REDUCTION)
- 3/4"Ø, SHEAR = 3560 lbs (W/O INSPECTION), TENSION = 2250 lbs (W/O INSPECTION)
- SPACING, 12 X DIA. = 12(.75) = 9" (W/O REDUCTION)
- MINIMUM EMBEDMENT, 5" + 2" = 7"

ALLOWABLES WITH INSPECTION:

$V = 3560^{\#} \times 2 = 7120^{\#}$ (W/INSPECTION)
$T = 2250^{\#} \times 2 = 4500^{\#}$ (W/INSPECTION)

FOR SPACING OF 3":

$V_{REDUCED} = \frac{3}{9} \times 7120^{\#} = 2373^{\#}$
$T_{REDUCED} = \frac{3}{9} \times 4500^{\#} = 1500^{\#}$

PROVIDE 12" EMBEDMENT

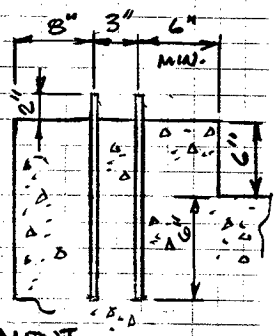

DESIGN REACTIONS:

VERTICAL, $T = 6.8^K/2(2) = 1.7^K$
HORIZONTAL, $V = 2.1^K/2(2) = 0.5^K$

$V_{ACT} = 0.5^K < V_{ALLOW} = 2.3^K \times 2 = 4.6^K$
$T_{ACT} = 1.7^K < T_{ALLOW} = 1.5^K \times 2 = 3.0^K$

USE 2-3/4"Ø ANCHORS W/ 12 EMBEDMENT AT EACH OF (4) CORNERS OF THE FOUNDATION. BOLT TYPE, A-307.

KAISER ENGINEERS
HANFORD

Calc. No. W320-24-07
Revision 0
Page No. 15 of 16

DESIGN ANALYSIS

Client	WHC	WO/Job No.	W320/ER-4319 MKC
Subject	SERVICE BUILDING FOUNDATION	Date	4/11/94 By MICHAEL R. CUSTER
		Checked	4/26/94 By DRB
Location	TANK 241-C-106	Revised	By

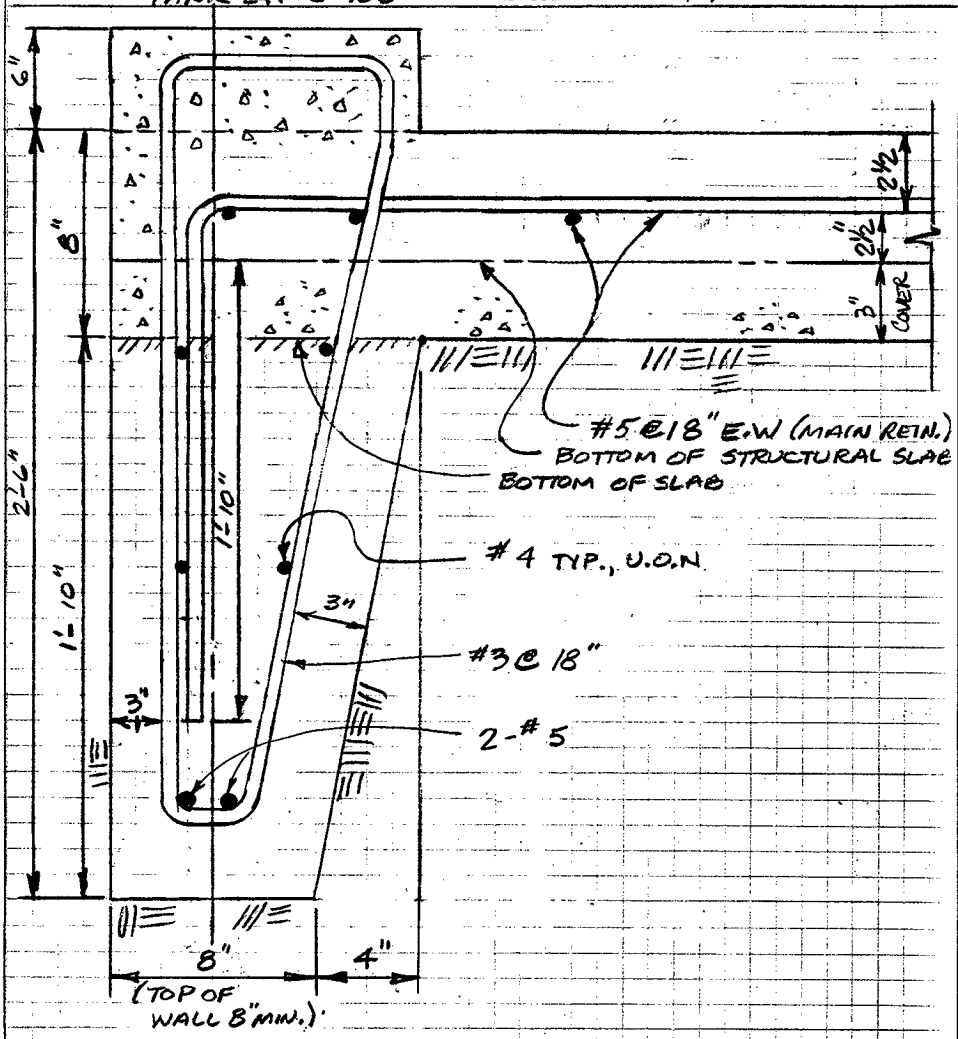

ICF KAISER HANFORD COMPANY	ENGINEERING CHANGE NOTICE SKETCH				
Ref. Dwg. H-2-818452	Sh. 1	Rev. 0	Prepared By PB	Checked By James R Booth 7/13/95	ECN No. W-320-103	Page 9/11

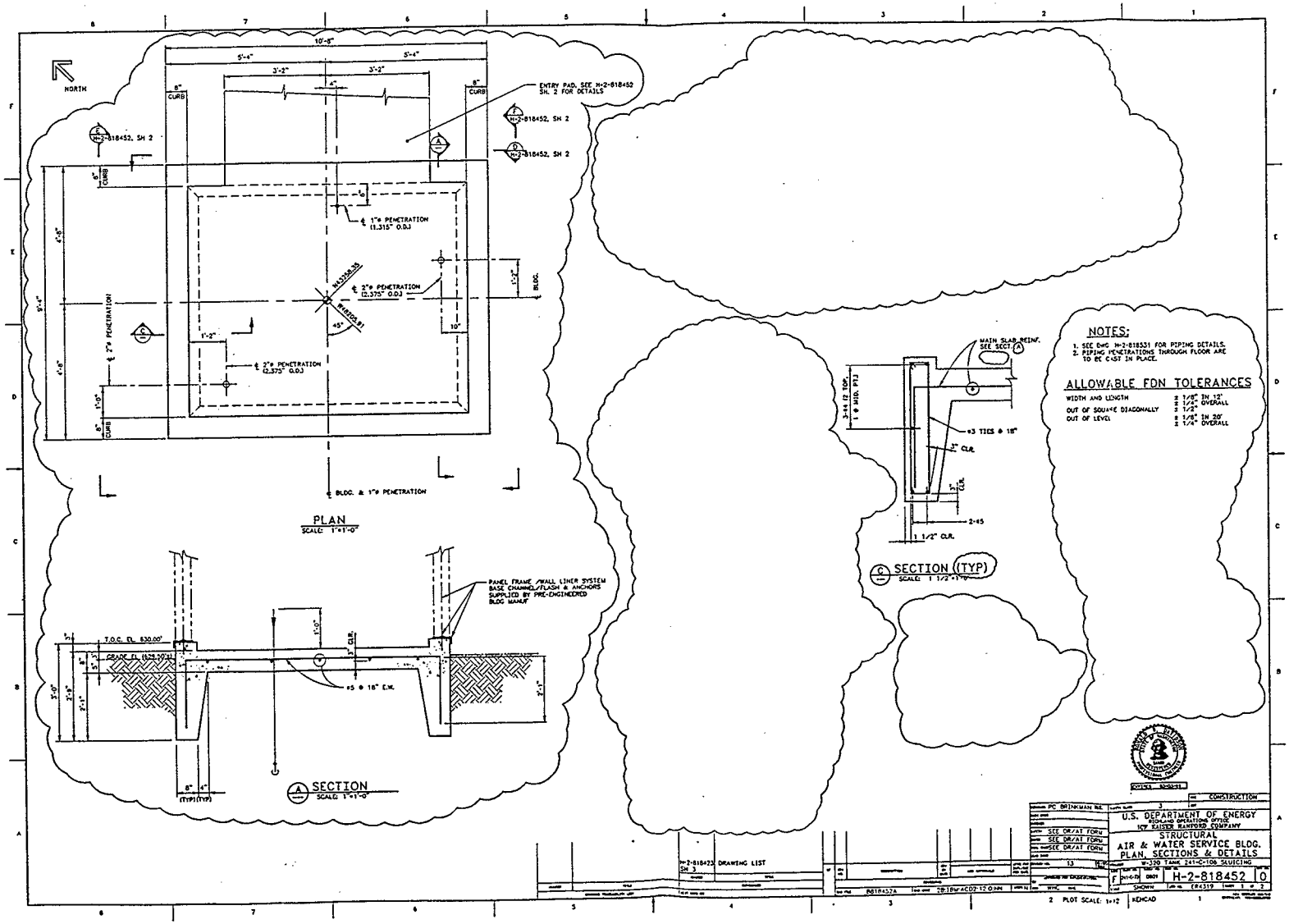

CALCULATION:
W320-24-022, REV 1
PAGE 16 OF 16

ATTACHMENT A

DJRB
7/13/95

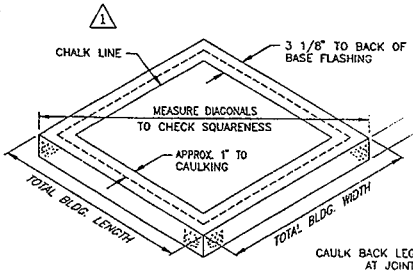

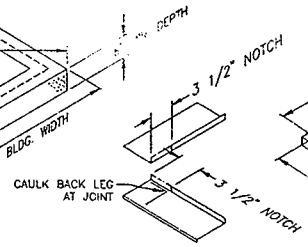

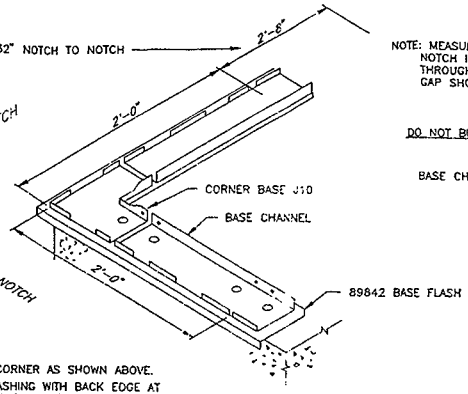

NOTE: MEASURE 32" C/C OF PANEL NOTCH IN BASE CHANNEL THROUGH BASE CHANNEL JOINT. GAP SHOULD OCCUR AT JOINT.

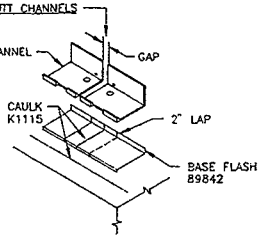

ERECTION PROCEDURE

1. CHECK FOUNDATION SQUARENESS.
2. SNAP CHALKLINE AS SHOWN. CAULK AS SHOWN ABOVE, OMITTING CAULK AT ALL OVERHEAD DOOR OPENINGS.

NOTE:
CONCRETE MUST BE CLEAN AND DRY BEFORE APPLYING K1115 CAULKING.

3. NOTCH FLASHING CORNER AS SHOWN ABOVE.
4. POSITION BASE FLASHING WITH BACK EDGE AT CHALKLINE, OMIT FLASHING AT OVERHEAD DOOR OPENINGS. CAULK LAPS IN FLASHING AS SHOWN.
5. ANCHOR CORNER BASE USING HOLE AS TEMPLATE AND DRILLING THROUGH FLASHING. SEE ABOVE DETAIL FOR POSITIONING.

NOTE: USE HAMMER DRILL FOR DRILLING OF ANCHOR HOLES. USE BASE CHANNELS AS TEMPLATES AND DRILL THROUGH FLASHING.

6. CONTINUE AROUND PERIMETER OF SLAB. BASE CHANNEL REQUIRES AN ANCHOR AT EACH END. SEE CHART "A" FOR MAXIMUM SPACE BETWEEN ANCHORS
7. PLACE SHIMS UNDER BASE FLASHING WHERE NECESSARY TO KEEP BASE CHANNEL LEVEL.

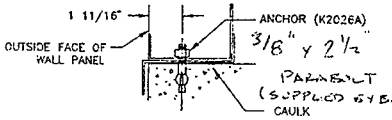

SEE FLYER WITH ANCHORS FOR INSTALLATION PROCEDURE (RECOMMENDED EMBEDMENT IN CONCRETE : 3/4")

BASE CHANNEL PARTS	
PART NO.	LENGTH
J1	1'-3 7/8"
J2	2'-7 7/8"
J3	3'-11 7/8"
J4	5'-3 7/8"
J5	6'-7 7/8"
J6	7'-11 7/8"
J7	9'-3 7/8"
J8	10'-7 7/8"
J9	11'-11 7/8"

ALLOWABLE FOUNDATION TOLERANCES

WIDTH AND LENGTH	± 1/8" in 12' ± 1/4" OVERALL
OUT OF SQUARE DIAGONALLY	± 1/2"
OUT OF LEVEL	± 1/8" in 20' ± 1/4" OVERALL

CHART 'A'
4'-0" MAX. ANCHOR SPACING
2'-8" MAX. ANCHOR SPACING
1'-4" MAX. ANCHOR SPACING

HNF-2467, Rev.0

REVISION NO. 1	REVISION NO. 2	REDRAWN :	BUTLER® Butler Manufacturing Company Kansas City, MO. USA Burlington, ONT. Canada	PANL - LINE BUILDING	DRAWING TITLE BASE CHANNEL INSTALLATION	GROUP :	DATE :
DATE 11-18-92	DATE 3-4-93	SCALE :				DRAWING NUMBER : B-002	REV. 2
DRAWN BY : DC	DRAWN BY : RLJ						
CHECKED LW	CHECKED						

W320-24-023

Misc. Mechanical (HVAC) Equipment Foundation
Chiller and Pumps

	CALCULATION IDENTIFICATION AND INDEX	Page i of iii Date 06/27/94

This sheet shows the status and description of the attached Design Analysis sheets.

Discipline Civil WO/Job No. W-320/ER-4319 Calculation No. W320-24-023

Project No. & Name PROJECT W-320, TANK 241-C-106 WASTE RETRIEVAL

Calculation Item Miscellaneous Mechanical (HVAC) Equipment Foundation - Chiller and Pumps

These calculations apply to:

Dwg. No. H-2-818458, sht. 1 Rev. No. 0

Dwg. No. Rev. No.

Other (Study, CDR) Rev. No.

The status of these calculations is:

[ ] Preliminary Calculations

[X] Final Calculations

[ ] Check Calculations (On Calculation Dated)

[ ] Void Calculation (Reason Voided)

Incorporated in Final Drawings? [X] Yes [ ] No

This calculation verified by independent "check" calculations? [ ] Yes [X] No

Original and Revised Calculation Approvals:

	Rev. 0 Signature/Date	Rev. 1 Signature/Date	Rev. 2 Signature/Date
Originator	Michael R Custer 7/18/94		
Checked by	MICHAEL B. LASOTA 10/14/94		
Approved by	10/20/94		
Checked Against Approved Vendor Data	4/7/98		

INDEX

Design Analysis Page No.	Description
i	Calculation Identification and Index
ii	Calculation Cross Index
iii	Design Verification Screening Criteria
1,2	OBJECTIVES; CRITERIA; DATA; ASSUMPTIONS; METHODS; REFERENCES; CALCULATIONS; CONCLUSIONS
3 - 20	DESIGN CALCULATIONS
APPENDICES	None

CALCULATION CROSS INDEX (Typical)

Subject Calculation No. W320-24-023, REV.0

Subject Calculation Revision No.	Superceded by Calculation No.	These interfacing calculation/documents provide input to the subject calculation, and if revised may require revision of the subject calculation.		Results and conclusions of the subject calculation are used in these interfacing calculations and/or documents.		Does the output interface calculation/ documents require revision?		Has the output interface calculation/ documents been revised?		Discipline manager's signature and date indicating evaluation complete.
		Calculation/Document No.	Revision No.	Calculation/Document No.	Revision No.	Yes	No	Yes	No	
0	—			H-2-818458 SHT.1	0		✓		✓	10/20/99

DESIGN VERIFICATION SCREENING CRITERIA

Project/Document No. W-320 / CALCULATION W320-24-023, REV. 0

When the design or design change affects hardware, formal design verification must be performed if one or more of the following questions must be answered affirmatively (YES).

YES	NO		
	✓	1.	Does the design or design change involved meet the established criteria to be considered Safety Class 1 or 2?
	✓	2.	Does this design or design change cause or permit changes to Safety Class 1 or 2 instrument or alarm setpoints outside of previously approved operational limits?
	✓	3.	Does this design or design change significantly affect the nuclear safety consequences of a malfunction or failure of the structure, system, or component?
	✓	4.	Does this design or design change involve or change design that has previously undergone formal design verification?

Assigned Lead Engineer — Date: 10/20/94

Responsible Discipline Manager — Date: 10/20/94

Original Design Package Distribution:
- Project Engineer
- Chief Design Engineer
- Engineering Document Control

Design Change Distribution:
- Attach to Engineering Change Notice

KEH-1981.00 (02/90)

KAISER ENGINEERS HANFORD

Calc. No. W320-24-023
Revision 0
Page No. 1 of 20

DESIGN ANALYSIS

Client WHC
Subject Miscellaneous Mechancial (HVAC) Equipment Foundations
Location TANK 241-C-106

WO/Job No. W-320/ER-4319
Date 06/27/94 By M.R Custer MRC
Checked 10/14/94 By M.B. LASOTA
Revised By

OBJECTIVE:

The objective of this calculation is to provide the detailed design for the Chiller and Pump, equipment foundation. The design of the foundation shall be performed in accordance with ACI-318 (Strength Design) and the Uniform Building Code (1991), as required by the project design criteria, SDC-4.4, Rev.11. Since definitive information regarding the weights and geometry of the equipment will not be available, due to long lead time for purchase, conservative estimates of the weights and equipment geometry will be used to perform the analysis and design. This calculation provides the Chiller and Pump foundation part of the active ventilation system (Outside tank farm).

CRITERIA:

1. DOE ORDER 6430.1A (04/06/89)
2. HANFORD PLANT STANDARDS, STANDARD ARCH./CIVIL DESIGN CRITERIA, SDC-4.1, REV.11
3. FUNCTIONAL DESIGN CRITERIA, WHC-SD-W320-FDC-001, REV.2
4. WHC-SD-WM-SEL-033, REV.0-C, Interim Safety Equipment List for 241-C-106 WASTE RETRIEVAL
5. ASCE 7-88

DATA:

1. The equipment and foundation for the equipment in this calculation are Safety Class 3 per Criteria 4. (See Active Ventilation System classification)

ASSUMPTIONS: Weights and equipment geometry will be conservatively assumed and will be verified on receipt and review of the vendor drawings.

METHODS: Hand calculations

REFERENCES:

1. ACI 318-91, Building Code Requirements for Reinforced Concrete.
2. Uniform Building Code (UBC), (1991 Edition).
3. HANFORD PLANT STANDARDS, STANDARD ARCH./ CIVIL DESIGN CRITERIA, SDC-4.1, REV.11.
4. Foundation Analysis and Design, Joesph E. Bowles (1st Edition).
5. ASCE 7-88 (American Society of Civil Engineers Standard), Minimum Design Loads for Buildings and Other Structures.

KAISER ENGINEERS HANFORD

Calc. No. W320-24-023
Revision 0
Page No. 2 of 20

DESIGN ANALYSIS

Client WHC
WO/Job No. W-320/ER-4319
Subject Miscellaneous Mechanical (HVAC) Equipment Foundations
Date 06/27/94 By M.R Custer MRC
Checked 10/14/94 By M.B. LASOTA MJL
Location TANK 241-C-106
Revised By

CALCULATIONS:

Refer to Design Calculation Section

CONCLUSIONS:

The foundation for the chiller and pumps is designed as a slab on grade. The loads developed in the calculation, while conservative are minimal, based on the extensive, physical area required by the piping and equipment configuration. The design satisfies the design requirements for the foundation.

KAISER ENGINEERS HANFORD

Calc. No. W320-24-023
Revision 0
Page No. 3 of 20

DESIGN ANALYSIS

Client WHC
WO/Job No. W-320/ER-4319
Subject Miscellaneous Mechanical (HVAC) Equipment Foundations
Date 06/27/94 By M.R Custer MRC
Checked 10/14/94 By M. B. LASOTA
Location TANK 241-C-106
Revised By

DESIGN CALCULATIONS:

The design and analysis of the chiller and pump foundation consists of developing conservative estimates for the weights of the major equipment, determine relative locations for each equipment on the foundation and design of the concrete foundation to support the load configuration. All equipment supported on the foundation is Safety Class 3 per Reference 4, therefore the design of the foundation is Safety Class 3.

DESIGN REQUIREMENTS:

- Soil Category reference drawings: H-2-70495 and H-2-70498

  Soil slightly silty, very coarse to coarse sand

- Allowable soil pressure (foundation design), 1500 lb/ft^2. (Reference 2, Table 29-B)

- Coefficient of Sliding = 0.25 (Reference 2, Table 29-B)

- Minimum footing dimensions, (Reference 2, Table 29-B)

- Snow/Roof Live Load, 20 lbs/ ft^2 (Reference 3)

- Wind Load, (Reference 3)

  - Basic wind speed, 70 mph

  - Importance Factor, 1.07

  - Exposure Category, C

KAISER ENGINEERS HANFORD

Calc. No. W320-24-023
Revision 0
Page No. 4 of 20

DESIGN ANALYSIS

Client WHC
Subject Miscellaneous Mechanical (HVAC) Equipment Foundations

WO/Job No. W-320/ER-4319
Date 06/27/94 By M.R Custer MRC

Checked 10/14/94 By M.B. LASOTA

Location TANK 241-C-106 Revised By

DESIGN LOADS:

DEAD LOADS

- Mechanical equipment (i.e the chiller, expansion tanks, air separator and pumps), piping/supports and an electrical distribution panel. Estimated weights for each equipment are:

EQUIPMENT	WEIGHT	AREA (sf.ft)	LOAD/(lb/sf.ft)
a) Chiller (CH-1)	10,000 lbs	54	185
b) Expansion Tank (ET-1)	1000 lbs	100	35
c) Expansion Tank (ET-2)	500 lbs	Totaled in (b)	Totaled in (b)
d) Pump (P-1)	500 lbs	"	"
e) Pump (P-2)	500 lbs	"	"
f) Air Separator Tank	200 lbs	"	"
g) Elect. Dist. Panel	300 lbs	"	"
h) Piping/Supports	500 lbs	N/A	N/A

Total Equipment Weight = 13500 lbs

NOTE: Slab critical area for loading is located under the Chiller

- Dead Load - Foundation (assume 12 " thick slab):

Wt. slab = 10.0 ft x 25.5 ft x 1.0 ft x 150 lbs/ft^3 =

Total Concrete Weight = 38250 lbs/ 38.3 Kips

KAISER ENGINEERS HANFORD

Calc. No. W320-24-023
Revision 0
Page No. 5 of 20

DESIGN ANALYSIS

Client WHC
Subject Miscellaneous Mechanical (HVAC) Equipment Foundations
WO/Job No. W-320/ER-4319
Date 06/27/94 By M.R Custer MRC
Checked 10/14/94 By M. B. LASOTA
Location TANK 241-C-106
Revised By

LIVE LOAD: L.L = 60 psf

L.L = 0.06 (10 ft.) (25.5 ft.) = 15.3 k (Reference 5)

EQUIPMENT LIVE LOAD:

- Equipment Live Load, LL_e = Equip. Live Load x 1.5 (Reference 2)

The equipment live load for this design is considered negligible due to the extremely, small magnitude of the loads transmitted by the rotating equipment (pumps) and chiller unit in addition to consideration of the orientation of the fan units of the chiller. An accepted, simplified approach to determine adequacy of a foundation is a comparison of the masses (mass ratio). The weight of the foundation should be 3 to 5 times the weight of the rotating equipment. For this case the ratio is: (Reference 5, page 601)
Mass Ratio = 40.6/ 11.2 (equipment contributing) = 3.6 (conservative)
Actual equipment loads transmitted to the foundation are considered in addition to the other loads on the equipment to design the equipment supports.

WIND LOAD:

- Determine wind load (general):

$q_z = 0.00256\ K_z\ (IV)^2$, where (Reference 6)

$K_z = 0.80$ (Exposure C) (Reference 3)

$I = 1.07$

$V = 70$ mph

$q_z = 0.00256\ (0.80)[(1.07)70]^2 = 11.5$ lb/ ft^2

$F = q_z\ G_h\ C_f\ A_f$, where: (Reference 5)

$G_h = 1.32$ (Ref. 5, Table 8)

$C_f = 1.4$ (Ref. 5, Table 12)

$F = 11.5\ (1.32)\ (1.4)\ A_f$,

$F = 21.25$ lbs/ft^2 x A_f

KAISER ENGINEERS HANFORD

Calc. No. W320-24-023
Revision 0
Page No. 6 of 20

DESIGN ANALYSIS

Client WHC
WO/Job No. W-320/ER-4319
Subject Miscellaneous Mechanical (HVAC) Equipment Foundations
Date 06/27/94 By M.R Custer MRC
Checked 10/14/94 By M.B. LASOTA
Location TANK 241-C-106
Revised By

- Wind forces on major equipment:

Equipment Item	Projected Area	Wind Force
Chiller	6.5 ft x 7.5 ft = 48.8 sq.ft	1036 lbs
Tank, TK-1	4.2 ft x 2.0 ft = 8.3 sq.ft	177 lbs
Tank, TK-2	1.0 ft x 2.0 ft = 2.0 sq.ft	43 lbs
Pumps (similiar to TK-2), x (2)		86 lbs
Elect.Distr.Pnl	4.0 ft x 6.0 ft = 24 sf.ft	510 lbs
	Total	= 1852 lbs or 1.9 k

The location of the lateral wind force is reasonably close to the center of gravity of the equipment, therefore the wind forces will coincide with the seismic forces.
NOTE: C-CW-TK-3 not considered since it is sheltered by TK-1 in the critical wind direction.

SNOW LOAD: 20 lbs/ ft^2 (Reference 3)

S = 10.0 ft x 25.5 ft x 20 lbs/ ft^2
S = 5100 lbs = **5.1 k**

EARTHQUAKE LOADS:

- Lateral Seismic Force, $F_p = ZIC_p W_p$, where: (Reference 2, Eq.36-1)

Z = 0.20 (Reference 2, Table 23-I)
I = 1.25 (Reference 3)
C_p = .75 x 2 = 1.5, (for non-rigid equipment) (Reference 3, Table 23-P)
$F_p = (0.20)(1.25)(1.5)\ W_p = 0.375\ W_p$
$E_{n-s} = V_{n-s}$ (100% max.) (Reference 2)

$E_{e-w} = V_{e-w}$ (30% max.) (Reference 2)

$E_{n-s} = V_{n-s} = 0.375\ W_p = 0.375\ (13500) = 5063$ lbs = **5.1 Kips**

$E_{e-w} = V_{n-s} = 0.375\ W_p\ (0.3) = 0.375\ (13500)(0.3) = 1518$ lbs = **1.5 Kips**

$E_{(SRSS)} = [5.1^2 + 1.5^2]^{1/2} =$ (Reference 2 & 3)

$E_{(SRSS)}$ = 5.3 Kips (Apply force in direction providing maximum load conditions)

KAISER ENGINEERS HANFORD

Calc. No. W320-24-023
Revision 0
Page No. 7 of 20

DESIGN ANALYSIS

Client WHC
Subject Miscellaneous Mechanical (HVAC) Equipment Foundations
WO/Job No. W-320/ER-4319
Date 06/27/94 By M.R Custer MRC
Checked 10/14/94 By M.B. LASOTA
Location TANK 241-C-106
Revised By

• Distribution of seismic forces by component:

LOAD IDENTIFIER	VERTICAL COMP./ RATIO	HORIZ. COMPONENT
a) Chiller (R-1)	10,000 (5300/13500)	3925 lbs/ 3.90 Kips
b) Expansion Tank (TK-1)	1000 "	393 " 0.39
c) Expansion Tank (TK-2)	500 "	196 " 0.20
d) Pump (P-1)	500 "	196 " 0.20
e) Pump (P-2)	500 "	196 " 0.20
f) Air Separator Tank (TK-3)	200 "	79 " 0.08
g) Elect. Dist. Panel	300 "	118 " 0.12
h) Piping/Supports	500 "	196 " 0.20
TOTAL WEIGHT =	13,500 lbs	5300 lbs/ 5.3 Kips

LOCATE THE CENTER OF GRAVITY/CENTER OF MASS FOR THE EQUIPMENT/COMPONENTS:

Component Description	Weight,lbs	[X-distance,	Z-Distance,	H-Distance,(ft.)
a) Chiller, R-1	10000 lbs	5.67 ft	5.83 ft	4.0 ft
b) Tank, TK-1	1000 lbs	14.42 ft	5.25 ft	2.0 ft
c) Tank, TK-2	500 lbs	17.58 ft	3.25 ft	1.5 ft
d) Pump, P-1	500 lbs	18.83 ft	6.50 ft	1.5 ft
e) Pump, P-2	500 lbs	22.33 ft	6.50 ft	1.5 ft
f) Air Sep.Tank TK-3	200 lbs	14.42 ft	1.25 ft	2.0 ft
g) Elect.Panel	300 lbs	15.58 ft	7.42 ft	3.5 ft
h) Pipe/Supports	500 lbs	16.25 ft	3.00 ft	3.0 ft

KAISER ENGINEERS HANFORD

Calc. No. W320-24-023
Revision 0
Page No. 8 of 20

DESIGN ANALYSIS

Client WHC
Subject Miscellaneous Mechanical (HVAC) Equipment Foundations

WO/Job No. W-320/ER-4319
Date 06/27/94 By M.R Custer MRC

Checked 10/14/94 By M.B. LASOTA MBL

Location TANK 241-C-106

Revised By

Reference points for the x, z, and h distances are as follows:

1) x-distance, dimension from the west edge of the slab to the approximate center of mass of the component in the east-west direction.

2) z-distance, dimension from the south edge of the slab to the approximate center of mass of the component in the north-south direction.

3) h-distance, dimension from the top of the slab to the approximate center of mass of the component in the vertical direction.

CENTER OF GRAVITY: (Ref. sketch, Figure 1, page 16)

- Center Gravity, East-West direction

$\bar{x} = \Sigma P_x / \Sigma P$ = 116273 ft-lb/ 13500 lbs

$\bar{x}$ = 8.61 ft, eccentricity, e(x) = 25.5/2 - 8.61 = 4.14

- Center of Gravity, North-South direction

$\bar{z} = \Sigma P_z / \Sigma P$ = 75651 ft-lbs/ 13500 lbs

$\bar{z}$ = 5.60 ft, eccentricity, e(z) = 10.0/2 - 5.60 = -0.60

CENTER OF GRAVITY: (Above the top of the foundation) (Ref. sketch, Figure 1, page 16)

- Eccentricity ($\bar{h}$):

$\bar{h} = \Sigma P_h / \Sigma P$ = 47200 ft-lbs/ 13500 lbs

$\bar{h}$ = 3.50 ft, Center of Gravity above the top of the foundation

KAISER ENGINEERS
HANFORD

Calc. No. W320-24-023
Revision 0
Page No. 9 of 20

DESIGN ANALYSIS

Client WHC
WO/Job No. W-320/ER-4319
Subject Miscellaneous Mechanical (HVAC) Equipment Foundations
Date 06/27/94 By M.R Custer MRC
Checked 10/14/94 By M.B. LASOTA
Location TANK 241-C-106
Revised By

DETERMINE GOVERNING LOAD COMBINATION: (Equipment support design)

- Load Combinations: (Reference 2)

1) U = D + L + (LLr or S)
2) U = D + L + W or E
3) U = D + L + W + S/2
4) U = D + L + S + W/2
5) U = D + L + S + E

Abbreviations:

D = Dead Load
L = Live Load (floor)
W = Wind Load
S = Snow Load
E = Earthquake Load
LLr = Roof Live Load

- The evaluation of each load combination is required to determine the maximum reactions for each equipment/ component for design of the supports:
- L is constant; LL_r = 0.0
- UNDERLINE - designates load combination governing support design

ITEM:	SQ FT	D	W	S	E	L	Load Combination: 1)	2)	3)	4)	5)
a)	115	10.0	1.04	2.30	3.90	6.90	19.20/ 0.00	16.90/ 3.90	18.05/ 1.04	19.20/ 0.52	19.20/ 3.90
b)	21	1.0	0.18	0.42	0.39	1.26	2.68/ 0.00	2.26/ 0.39	2.47/ 0.18	2.68/ 0.09	2.68/ 0.39
c)	12	0.5	0.04	0.24	0.20	0.72	1.46/ 0.00	1.22/ 0.20	1.34/ 0.04	1.46/ 0.02	1.46/ 0.20
d)	21	0.5	0.04	0.42	0.20	1.26	2.18/ 0.00	1.76/ 0.20	1.97/ 0.04	2.18/ 0.02	2.18/ 0.20
e)	21	0.5	0.04	0.42	0.20	1.26	2.18/ 0.00	1.76/ 0.20	1.97/ 0.04	2.18/ 0.02	2.18/ 0.20
f)	14	0.2	0.00	0.28	0.08	0.84	1.32/ 0.00	1.04/ 0.08	1.18/ 0.00	1.32/ 0.00	1.32/ 0.08
g)	21	0.3	0.51	0.42	0.12	1.26	1.98/ 0.00	1.56/ 0.51	1.77/ 0.51	1.98/ 0.26	1.98/ 0.12
h)	30	0.5	0.20	0.60	0.20	1.80	2.90/ 0.00	2.30/ 0.20	2.60/ 0.20	2.90/ 0.10	2.90/ 0.20
										TOTAL =	33.9/ 5.29

KAISER ENGINEERS HANFORD

Calc. No. W320-24-023
Revision 0
Page No. 10 of 20

DESIGN ANALYSIS

Client WHC
Subject Miscellaneous Mechanical (HVAC) Equipment Foundations

WO/Job No. W-320/ER-4319
Date 06/27/94 By M.R Custer MRC

Checked 10/14/94 By M.B. LASOTA

Location TANK 241-C-106 Revised By

DETERMINE THE GOVERNING LOAD COMBINATION: (Foundation design)

- Load Combinations: (Reference 1)

(D = DEAD LOAD, L = LIVE LOAD, W = WIND LOAD, E = EARTHQUAKE LOAD)

1) U = 1.4D + 1.7L (Minimum design requirements)
2) U = 0.75 (1.4D + 1.7L + 1.7W)
3) U = 0.9D + 1.3 W

In addition, if earthquake loads are included in the design, load combinations of section 2609(c)(2),(Reference 3) apply, except (1.1E) is substituted for (W), as follows:

4) U = 0.75 (1.4D + 1.7L + 1.87E)
5) U = 0.9D + 1.43E
also for earthquake loading, use the following:

6) U = 1.4 (D + L+ E)
7) U = 0.9D +/- 1.4E

- Evaluate Load Combinations:

1) U = 1.4 (13.5) + 1.7 (15.3) = 44.9 kips

2) $U_{(VERT.)}$ = 0.75 [1.4 (13.5) + 1.7 (15.3)] = 33.7 kips
$U_{(HORIZ.)}$ = 0.75 [1.7 (1.9)] = 2.4 kips

3) $U_{(VERT.)}$ = 0.9 (13.5) = 12.2 kips
$U_{(HORIZ.)}$ = 1.3 (1.9) = 2.5 kips

4) $U_{(VERT.)}$ = 0.75 [1.4 (13.5) + 1.7 (15.3) = 33.7 kips
$U_{(HORIZ.)}$ = 0.75 [1.87 (5.3)] = 7.4 kips

5) $U_{(VERT.)}$ = 0.9 (13.5) = 12.2 kips
$U_{(HORIZ.)}$ = 1.43 (5.3) = 7.6 kips

6) $U_{(VERT.)}$ = 1.4 (13.5 + 15.3) = 40.3 kips
$U_{(HORIZ.)}$ = 1.4 (5.3) = 7.4 kips

7) $U_{(HORIZ.)}$ = 0.9 (13.5) (SEE EQUATION 5) = 12.2 kips
$U_{(HORIZ.)}$ = (+/-) 1.4 (5.3) = (+/-)7.4 kips

Equation 6: Maximum design load value to be applied to develop foundation design.

KAISER ENGINEERS HANFORD

Calc. No. W320-24-023
Revision 0
Page No. 11 of 20

DESIGN ANALYSIS

Client WHC
Subject Miscellaneous Mechanical (HVAC) Equipment Foundations

WO/Job No. W-320/ER-4319
Date 06/27/94 By M.R Custer MRC

Checked 10/14/94 By M. B. LASOTA

Location TANK 241-C-106 Revised By

FOUNDATION DESIGN:

The foundation required is a mat type on grade. The size of foundation has been predetermined by the physical layout required for the equipment and components.

The foundation dimensions are: 10.0 ft x 25.5 ft, estimated 12" thick (Reference Figures 1,2 & 3 for loads and locations)

- Check foundation size: (Reference sketch, Figures 2,3 page 17)

q_e(effective) = 1.5 k/ft^2 - 12"/ 12" (150 lb/ ft^3 (1 k/ 1000 lb) = 1.35 k/ft^2

A req = (D.L + L.L)/ q_e = (13.5 + 15.3)/ 1.35 k/ft^2

A req = 21 ft^2 < 255 ft^2 .....OK

- Check foundation stability:

Safety Factor (Overturning):

S.F (ot) = [5.0 ft (38.3 k)(0.85) + 4.5 ft (13.5 k)(0.85)]/ (Ref.2, Section 2337)
4.5 ft (5.3 k)

S.F (ot) = 8.99 > 1.5 ....ok

Safety Factor (Sliding):

S.F (sliding) = [.25(0.85)(38.3 + 13.5)]/ 5.3 = 2.08 > 1.5 ....ok

- Determine the center of gravity of the loads relative to the kern:

k_x, (length) = 25.5 ft/ 6 = 4.25 ft

k_z, (width) = 10.0 ft/ 6 = 1.67 ft

e_x = 4.14 ft and e(z) = 0.60 ft (per page 8),

k_x = 4.25 ft > $\bar{x}$ = 4.14 ft., Load in middle 1/3 of slab....OK

k_z = 1.67 ft > $\bar{z}$ = 0.60 ft., Load in the middle 1/3 of slab....OK

Use q = P/A (+/-) M_c/I approach (two directions) to determine maximum soil bearing p pressures.

KAISER ENGINEERS HANFORD

Calc. No. W320-24-023
Revision 0
Page No. 12 of 20

DESIGN ANALYSIS

Client WHC
WO/Job No. W-320/ER-4319
Subject Miscellaneous Mechanical (HVAC) Equipment Foundations
Date 06/27/94 By M.R Custer MRC
Checked 10/14/94 By M.B. LASOTA
Location TANK 241-C-106
Revised By

- Determine maximum soil bearing pressure:

P_1 = 13.5 k (Equipment load, eccentric with foundation centerlines, n-s/e-w)
P_2 = 15.3 k (Live load at centerline of foundation)
P_3 = 38.3 k (Dead weight of concrete at centerline of foundation)
M_x = 13.5 k (0.60 ft) = 8.1 k-ft (Moment due to eccentric equipment load)
M_z = 13.5 k (4.14 ft) = 55.9 k-ft (Moment due to eccentric equipment load)
$M_{e(x)}$ = 4.5 ft (5.1 k) = 23.0 k-ft (Moment due to n-s seismic load)
$M_{e(z)}$ = 4.5 ft (1.5 k) = 6.8 k-ft (Moment due to e-w seismic load)

Maximum soil pressures:

$q = \Sigma P/A$ (+/-) ΣM_x (c)/ I_x (+/-) ΣM_z (c)/ I_z , where:

$I_x = bd^3/12 = [25.5\ (10)^3]/12 = 2125\ ft^4$

$I_z = bd^3/12 = [10\ (25.5)]^3/12 = 13818\ ft^4$

q = (13.5 k + 15.3 k + 38.3 k)/ 10 ft (25.5 ft)

+/- [(55.9 k-ft + 6.8 k-ft)] (12.75 ft)/ 13818 ft^4

+/- [(8.1 k-ft + 23.0 k-ft)] (5.0 ft)/ 2125 ft^4

q = 0.263 k/ft^2 (+/-) 0.058 k/ft^2 (+/-) 0.073 k/ft^2

q_a = (+) 0.263 (+) 0.058 (+) 0.073 = + 0.394 k/ft^2 (maximum)

q_b = (+) 0.263 (-) 0.058 (+) 0.073 = + 0.278 k/ft^2

q_c = (+) 0.263 (+) 0.058 (-) 0.073 = + 0.248 k/ft^2

q_d = (+) 0.263 (-) 0.058 (-) 0.073 = + 0.132 k/ft^2 (minimum)

q (maximum) = 0.394 k/ft^2

q (minimum) = 0.132 k/ft^2

q (maximum) = 0.394 k/ft^2 < q (allow.) = 1.5 k/ft^2 ..... ok

KAISER ENGINEERS HANFORD

Calc. No. W320-24-023
Revision 0
Page No. 13 of 20

DESIGN ANALYSIS

Client WHC
Subject Miscellaneous Mechanical (HVAC) Equipment Foundations

WO/Job No. W-320/ER-4319
Date 06/27/94 By M.R Custer MRC
Checked 10/14/94 By M. B. LASOTA
Location TANK 241-C-106
Revised By

- Check slab two way shear:

The critical area for punching shear is located at the Chiller unit, since this equipment represents approximately 80 % of the load on the foundation.

q(ultimate) = 1.7 (0.394 k/ft)^2 = 0.67 k/ ft^2

Assumed depth of slab, d =12 ", then d effective = 12 " - 3 "= 9"

b_o, (punching shear) = 4(7.33 + d/2) = 4(7.33 ft + 9"/2 (12") ft) = 30.8 ft

V_u = [(10.0 ft) (25.5 ft) - 7.7 ft^2] (0.67 k/ft^2) = 131 k

d = 131000 lbs/ [0.85 (4) (4000)$^{1/2}$ (30.8 ft x 12")] = 1.65 "

d = 1.65 " + 3" + 1" = 5.65" < 12 ".... ok

- Check slab one way shear:

Vu = (10.0 ft) (2.0 ft) (0.67 k/ft^2) = 13.4 k

d = 13400 lbs / (.85) (2) (4000)$^{1/2}$ (120") = 1.04"

d = 1.04" + 3" + 1" = 5.04" < 12 ....ok

- Determine slab flexural reinforcement requirements: (Long Dimension)

Mu = (2.00 ft) (10.0 ft) (0.67 k/ft^2) (2.00 ft/2) = 13.4 k-ft

Mu = 13.4 k-ft = 13400 lb-ft

Mu/ 0.90 b d2 = 12 (13400)/ 0.90 (120) (8.5)^2 = 20.6, Use p(min) = 0.0018

As = 0.0018 (120")(8.5") = 1.84 in^2 , 1.84 in^2 /10 ft = 0.18 in^2 / 1 ft width

Use #4 @ 12" o.c, (0.20 in^2/ 1 ft. width), ...ok

KAISER ENGINEERS HANFORD

Calc. No. W320-24-023
Revision 0
Page No. 14 of 20

DESIGN ANALYSIS

Client WHC
Subject Miscellaneous Mechanical (HVAC) Equipment Foundations

WO/Job No. W-320/ER-4319
Date 06/27/94 By M.R Custer MRC

Checked 10/14/94 By M.B. LASOTA

Location TANK 241-C-106 Revised By

- Determine slab flexural reinforcement requirements: (Short dimension)

$Mu = (2.17\ ft)\ (25.5\ ft)\ (0.67\ k/\ ft^2)\ (2.17\ ft/2) = 40.2\ k\text{-}ft$

$Mu = 40200\ lb\text{-}ft$

$Mu/\ 0.90\ b\ d^2 = 12\ (40200\ lb\text{-}ft)/\ (0.90)\ (306")\ (8.5)^2 = 24.2$, Use p(min) = 0.0018

$As = 0.0018\ (306")(8.5") = 4.7\ in^2$, $4.7\ in^2\ /\ 25.5\ ft = 0.18\ in^2/\ 1\ ft\ width$

Use # 4 @ 12" o.c, $(0.20\ in^2/\ 1\ ft.\ width)$, ...ok

- Check reinforcement bar development length requirements:

$l(db) = [0.04\ Ab\ f(y)]/\ (f'c)^{1/2}$ (Reference 2, section 2612(c), page 469)

$l(db) = 0.04\ (.20)\ (60000)/\ (4000)^{1/2} = 7.6"$

ld (provided) = (2.17 ft x 12") - 3" = 23" > 7.6" ....ok

ld (min), per UBC = 12" < 23" ....ok

KAISER ENGINEERS HANFORD

Calc. No. W320-24-023
Revision 0
Page No. 15 of 20

DESIGN ANALYSIS

Client WHC
WO/Job No. W-320/ER-4319
Subject Miscellaneous Mechanical (HVAC) Equipment Foundations
Date 06/27/94 By M.R Custer MRC
Checked 10/14/94 By H. B. LASOTA
Location TANK 241-C-106
Revised By

• Determine individual equipment anchorage requirements (equipment to skid): (Loads are multiplied by a factor of 2.5 to address equipment Live Load and an increase factor of 1.5 for rotating equipment).

Equipment	Horizontal Force/Type	Shear Force	Tension Force
a) Chiller (R-1)	3.9 k / E	3.9 (2.5)/4 = **2.4 k**	3.9 (2.5)(3.5)/ (7.3)(2) = **2.3 k**
b) Exp. Tank (TK-1)	0.39 k / E	0.39 (2.5)/4 = **0.24 k**	0.39 (2.5)(2.0)/ (2)(2) = **0.49 k**
c) Exp. Tank (TK-2)	0.20 k / E	0.20 (2.5)/4 = **0.125 k**	0.20 (2.5)(1.0)/ (0.75)(2) = **0.33 k**
d) Pump (P-1)	0.20 k / E	"	"
e) Pump (P-2)	0.20 k / E	"	"
f) Air Separator Tank	0.08 k / E	0.08 (2.5)/4 = **0.05 k**	0.08 (2.5)(2)/ (2)(0.75) = **0.27 k**
g) Elect. Dist. Panel	0.51 k / W	0.51 (2.5)/ 4 = **0.32 k**	0.51 (2.5)(3.5)/ (2)(1.25) = **1.79 k**

(E), Earthquake load governs; (W), Wind load governs

• Anchorage requirements: Cast-in-place anchor bolts or an equivalent capacity embedded plate w/welded studs, as required by the equipment vendor.

Anchor Bolt requirements (Skid to Foundation): The anchor bolts will be located 9.0 ft center to center (6" from the edge of the foundation). The shear and tension loads on the anchors are: (Special inspection of the anchor bolts required)

• Shear, V = 5.3 kips (total), providing 10 anchors; 5.3 k/ 10 = 0.53 k/ anchor
• Tension, T = (5.3 k)(3.5 ft.)/ 9.0 ft = 2.1 k, or 2.1 k/ 5 = 0.42 k/ anchor

Try 1/2 dia. cast-in-place anchors, ASTM A 307 w/ 4"min. embedment:
(Reference 2, Table No. 26-E), Allowable loads: Shear, V_a = 2 k, Tension, T_a = 1.9 k

$V/ V_a + T/ T_a < 1.0$,

0.53/ 2.0 + 0.42/ 1.9 =
0.26 k + 0.22 k = 0.48 < 1.0 .....ok

Provide 10 - 1/2" dia. A 307 anchor bolts, 5 bolts each side along the 25.5 ft dimension w/ 6" min. edge distance and 4" min. embedment depth, beyond the bottom of the anchor sleeve.

KAISER ENGINEERS
HANFORD

Calc. No. W320-24-023
Revision 0
Page No. 16 of 20

DESIGN ANALYSIS

Client	WHC	WO/Job No.	W-320/ER-4319
Subject	MISC. MECHANICAL (HVAC) EQUIPMENT FOUNDATIONS	Date	6/29/94 By M.R. CUSTER MRC
		Checked	10/14/94 By K.B. LASOTA KBL
Location	TANK 241-C-106	Revised	By

SUMMARY - FOUNDATION LOADS/LOCATIONS

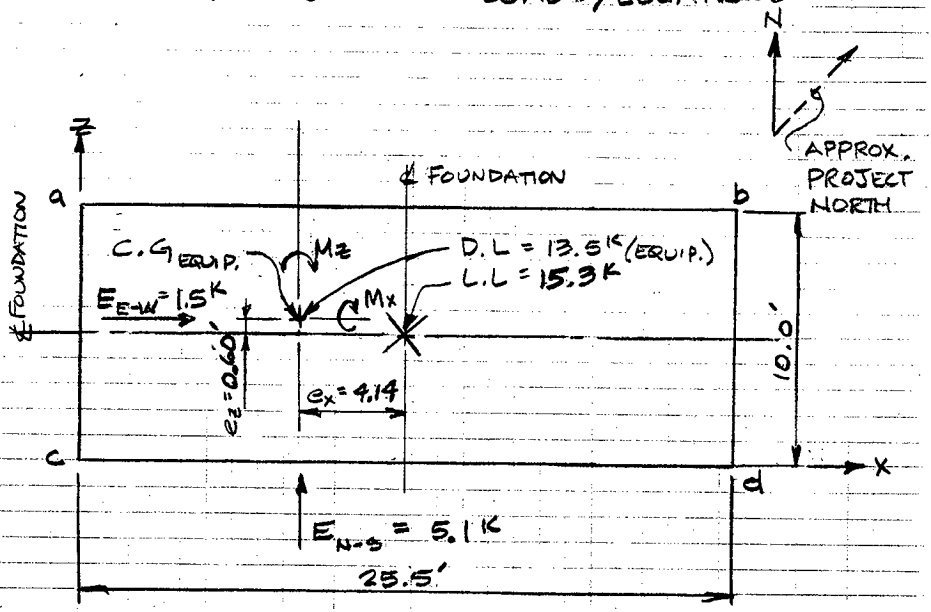

FIGURE 1

$E_{SRSS} = 5.3^K$ (DIRECTION OF MAXIMUM LOADS)

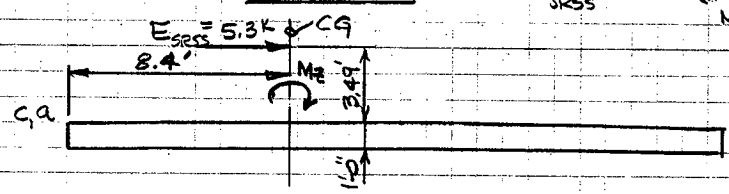

KAISER ENGINEERS
HANFORD

DESIGN ANALYSIS

Calc. No. W320-24-023
Revision 0
Page No. 17 of 20

Client	WHC	WO/Job No.	
Subject	MISCELLANEOUS MECHANICAL (HVAC) EQUIPMENT FOUNDATIONS	Date 6/29/94 By M.R CUSTER MRC	Checked 10/14/94 By M.B. LASOTA
Location	TANK 241-C-106	Revised	By

LOADS ON FOUNDATION:

DEAD, LIVE & SEISMIC LOADS

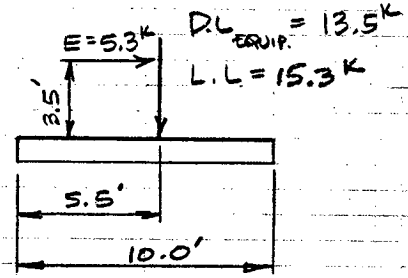

FIGURE 2

DEAD, LIVE & WIND LOADS

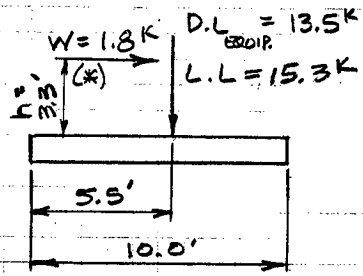

FIGURE 3

(*) LOCATION OF THE RESULTANT WIND FORCES IS DETERMINED AS FOLLOWS:

$$\Sigma F_W h = [4.0'(.912^K) + 1.0'(.12^K) + 1.0'(.06^K) + 3.0'(.73^K)]$$

$$\Sigma F_W h = 6.02, \text{ IF } \Sigma F_W = 1.8^K$$

$$h = \frac{6.02}{1.8} = 3.3 \text{ FT.}$$

ICF KAISER HANFORD

DESIGN ANALYSIS

Calc. No. W320-24-023
Revision 0
Page No. 18 of 20

Client WHC
Subject Miscellaneous Mechanical (HVAC) Equipment Foundations
Location: Tank Farm 241-C

WO/Job No. ER-4319
Date 9/28/94 By M.R. CUSTER MRC
Checked 10/14/94 By M.B. LASOTA MBL
Revised By

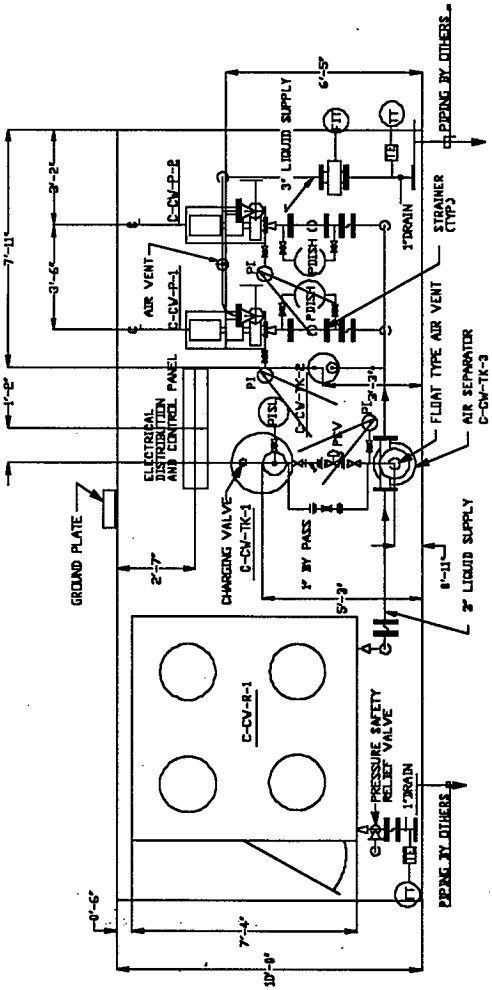

ICF KAISER HANFORD

DESIGN ANALYSIS

Calc. No. W320-24-023
Revision 0
Page No. 19 of 20

Client WHC
Subject Miscellaneous Mechanical (HVAC)
Equipment Foundations
Location: Tank Farm 241-C

WO/Job No. ER-4319
Date 9/28/94 By M.R. CUSTER MRC
Checked 10/14/94 By H.B. LASOTA HBL
Revised By

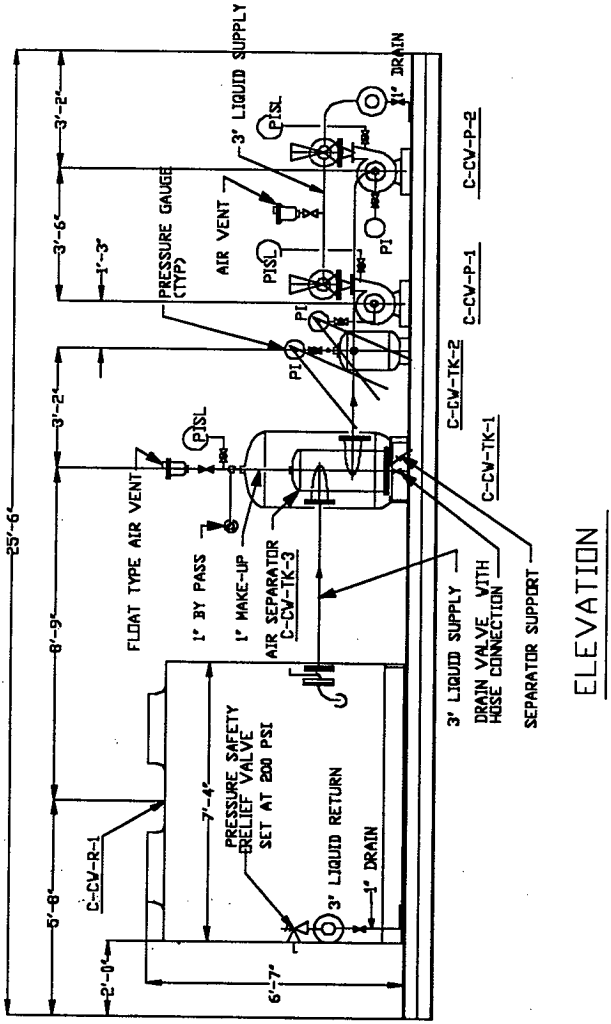

ELEVATION

CALC. W320-24-023
REVISION 0
PAGE 20 OF 20

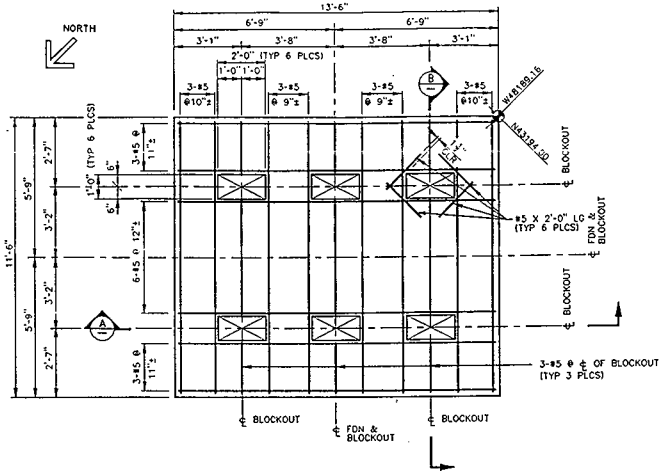

PLAN - MCC SLAB
SCALE: 1/2"=1'-0"

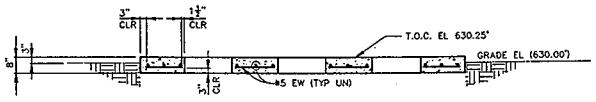

SECTION A-A
SCALE: 1/2"=1'-0"

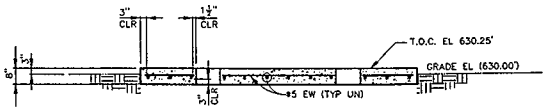

SECTION B-B
SCALE: 1/2"=1'-0"

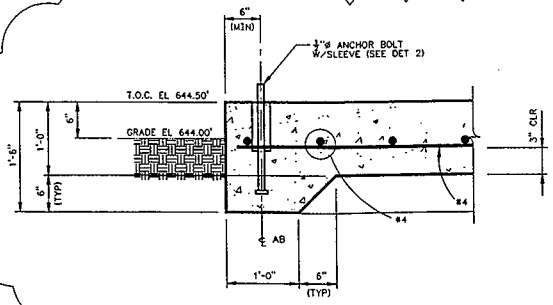

1 DETAIL
SCALE: 1 1/2"=1'-0"

HOLD 1

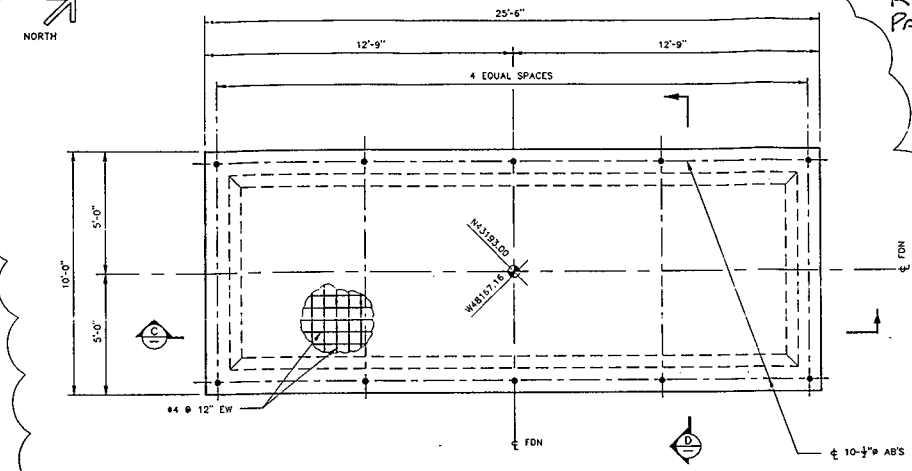

PLAN - CHILLER SLAB
SCALE: 1/2"=1'-0"

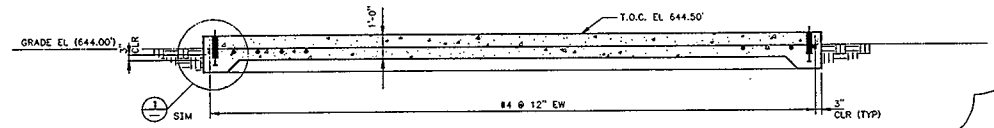

SECTION C-C
SCALE: 1/2"=1'-0"

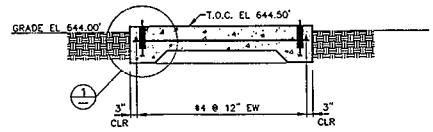

D SECTION
SCALE: 1/2"=1'-0"

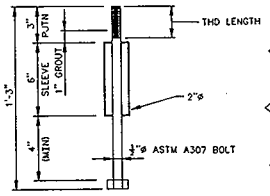

2 DETAIL-ANCHOR BOLT
SCALE: 3"=1'-0"
(10 REQ'D.)

HOLD TABLE		
HOLD NO.	DESCRIPTION	EXPECTED RLSE DATE
1	VERIFY LOCATION AND ANCHOR SIZE WITH VENDOR INFORMATION/DRAWINGS PRIOR TO CONCRETE PLACEMENT.	

NOTES:

1. CONCRETE SHALL BE F'c = 4000 PSI.
2. ANCHOR/EMBEDDED PLATE LOCATIONS PER EQUIPMENT VENDOR DRAWINGS.
3. FIELD TO LOCATE & INSTALL 4-½"ø HKB II ANCHOR BOLTS.

EXPIRES 03-03-95

H-2-818423 DRAWING LIST SH 7

NUMBER	TITLE	NUMBER	TITLE
DRAWING TRACEABILITY LIST		HOT LIST ON	REFERENCED

REV NO.	DESCRIPTION	REV BY DATE	FOR APPROVALS	APVD FOR SUPL/CNC FOR DATE
	REVISIONS			

APVD FOR IMPLEMENTATION
BY WHC DATE

CAD FILE B818458A CAD CODE 2J:JBM:ACD2:12.0:NN SHEET N

DESIGNED PC BRINKMAN DATE
DRAN CHKR
CHECKED
SAFETY SEE DR/AT FORM
ENVIR SEE DR/AT FORM
DSIGN ENGR SEE DR/AT FORM
CAD CHKR
REVIEW NO. 14 10/19/94

SAFETY CLASS 3 USE PRELIMINARY

U.S. DEPARTMENT OF ENERGY
RICHLAND OPERATIONS OFFICE
ICF KAISER HANFORD COMPANY

STRUCTURAL
MISC HVAC, ELECT CONC PADS
PLANS, SECTS & DETS

PROJECT W-320 TANK 241-C-106 SLUICING

SIZE	BLDG NO.	DWGS NO.	DWG NO.	REV NO.
F	200E	0900	H-2-818458	0

SCALE SHOWN JOB NO. ER4319 SHEET 1 OF 3

PLOT SCALE: 1=12 KEHCAD

JOHN TUNISON
STRUCTURAL ENGINEER

PHONE (509) 926-4345
SOUTH 4122 CONIFER COURT
SPOKANE, WASH. 99206

PROJECT CHILLER SKID BY JST DATE 7/29/9[illegible]

MC GOWAN CONST. SERVICES CHKD. BY _____ DATE _____

BASE SUMMARY JOB NO. 9532 SHT. 11

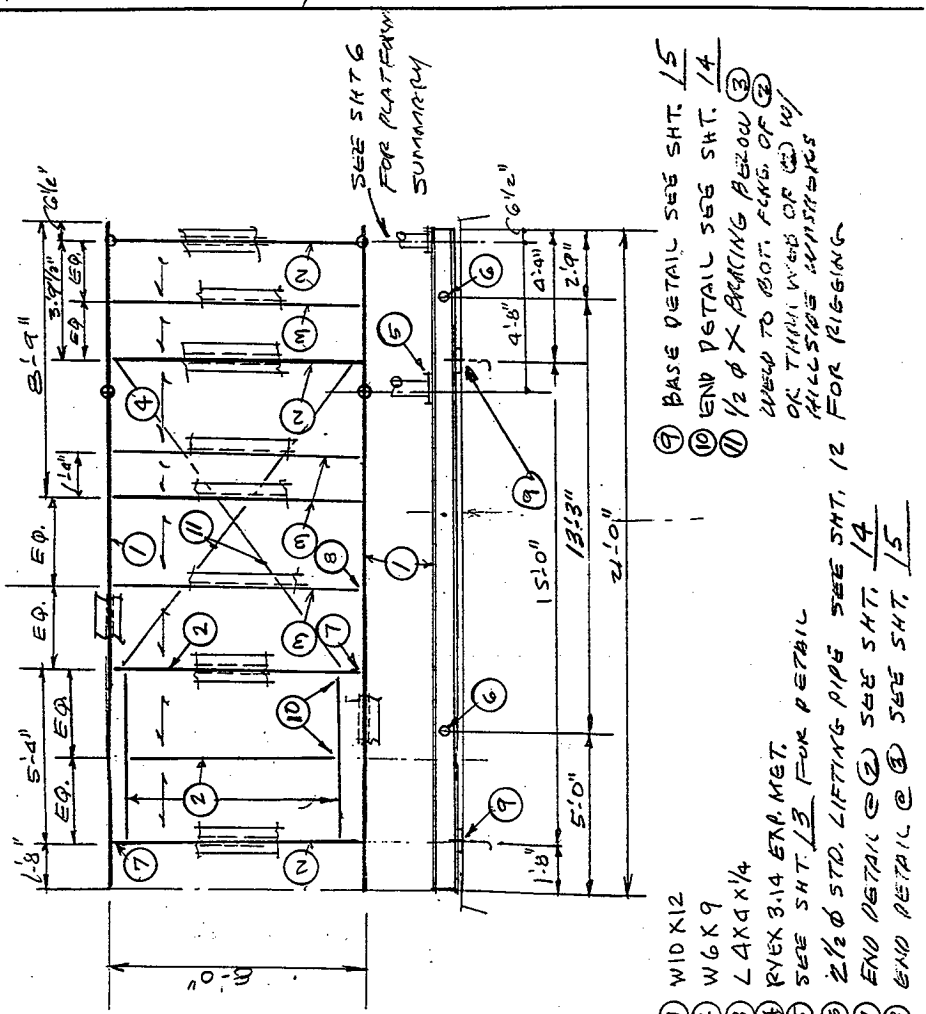

JOHN TUNISON
STRUCTURAL ENGINEER

PHONE (509) 926-4345
SOUTH 4122 CONIFER COURT
SPOKANE, WASH. 99206

PROJECT CHILLER SKID. BY JST DATE 7/30/95
MC FOWLER CONST. SERVICES CHKD. BY _____ DATE _____
DETAILS JOB NO. 9532 SHT. 1ST

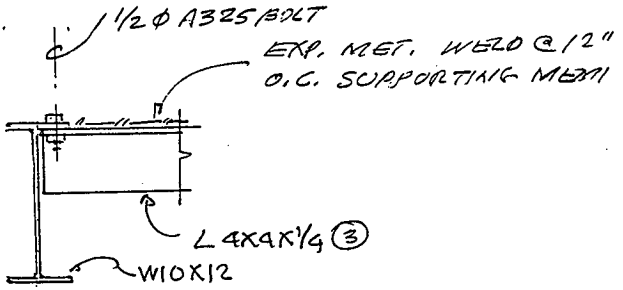

END CONN. FOR (3)

$V = \sqrt{1.06^2 + (.33 \times 1.46)^2} = 1.54^K$
USE 5/8 Ø MIN. BOLT.

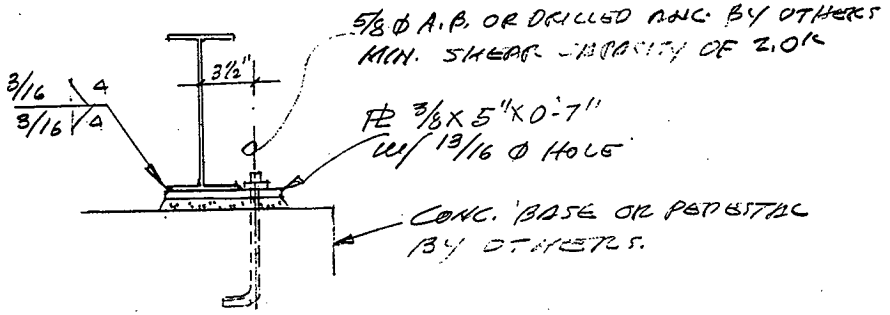

BASE CONNECTION

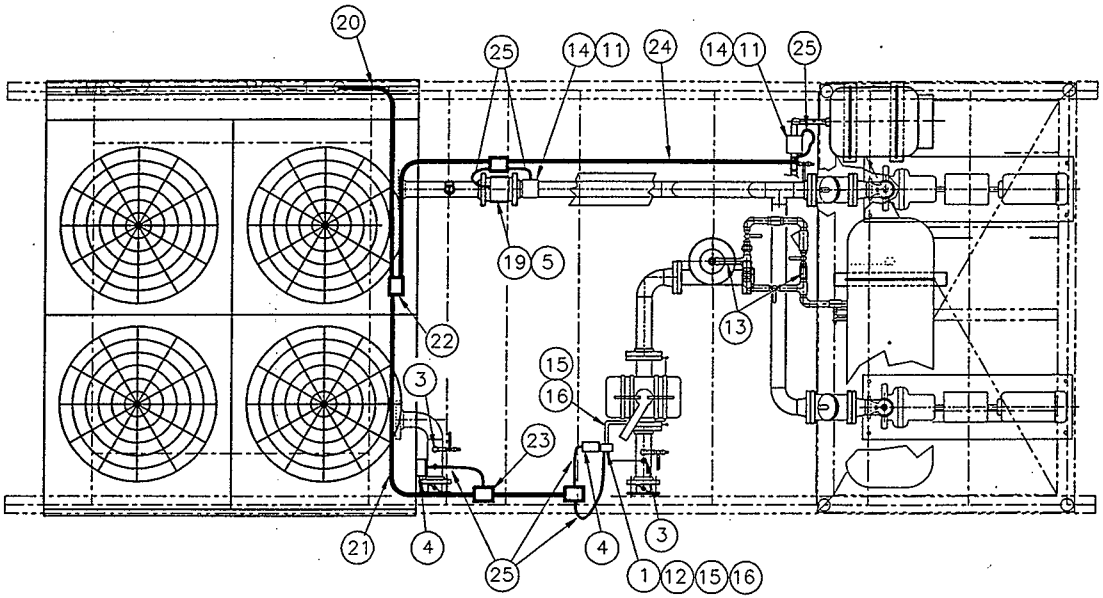

BILL OF MATERIALS

ITEM	QTY	DESCRIPTION	REMARKS
1	1	DIFFERENTIAL PRESSURE SWITCH DWYER CAPSU PHOTO HELIC	SERIES 43000 PDISH 1369
2			
3	2	CHROMOLOX CPWC-1 PROTECTIVE WELL	TSH 13618,13619
4	2	CHROMOLOX PIT-15 TEMPERATURE CONTROLLER	TSH 13618,13619
5	1	MAGNETIC FLOW METER FM625-03-4-8-1-0-0 (120 VOLT POWER SUPPLY)	SPARLING PRODUCTS FT 1364 FE 1364
6	40	1/2" RGD CONDUIT	WW GRAINGER 5XC30
7	1	1/2" TEE	WW GRAINGER 5XC70
8	21	1/2" SEALTIGHT CONNECTION	WW GRAINGER
9	QTY	#14 THHN/THWN MTW STRANDED COPPER CONDUCTOR	WW GRAINGER 5XC21
10	QTY	1/2" JIFFY STRAP	WW GRAINGER 5XC41
11	4	2 VALVE MANIFOLD M507-CMT ASSEMBLY	PRECISION GENERAL
12	1	5 VALVE MANIFOLD M2 573CDT ASSEMBLY	PRECISION GENERAL
13	2	PRESSURE GUAGE (PI 1368) PGS-25L-100 (PI 1367)	OMEGA VOL.29 PG G-15 0-100 PSIG
14	2	LOW PRESSURE SWITCH PSL 1366 SERIES PSW 108 (PSL 13610)	OMEGA VOL.29 PG H-14
15	2	ø1/2" NPT TO ø.375" COMP. FIT ASTM A269 TYPE 304	
16	2	ø.375" SS TUBING ASTM A269 TYPE 304	
17			
18			
19	QTY	8000 SERIES TWISTED SHEILDED PAIR	BELDEN INDUSTRIES
20	QTY	1" RIGID CONDUIT	WW GRAINGER
21	QTY	3/4" RIGID CONDUIT	WW GRAINGER
22	1	1 X 3/4 X 1/2 LB TEE	WW GRAINGER
23	2	3/4 X 1/2 LB TEE	WW GRAINGER
24	QTY	1/2" RIGID CONDUIT	WW GRAINGER
25	QTY	1/2" SEALTIGHT FLEX	WW GRAINGER
26	QTY	--	--
27	QTY	--	--

NOTE: SEE DWG. DIAGRAM-WIRING ACDR45B 200,230,460 V. DWG. No 593440101 SHT 1 THROUGH 4 FOR WIRING DIAGRAM.

REV NO	DESCRIPTION	REV BY DATE	CHK BY DATE	APVD DATE	APVD DATE
B	REVISED PER FIELD CONDITIONS "AS BUILT"				

REVISIONS

CADFILE S1E-AB CADCODE 1E:IBM:ACD2:12:SS

DRAWN RLN 08-08-95
CHECKED W. PYKUS 11-17-95
APPROVED X x
APPROVED X x

McGowan Construction Services
Richland, WA 99352

CHILLER SKID INSTRUMENTATION CONDUIT RUN

PROJECT NO. 9503

SIZE B DWG NO 9503-SKID-INST REV B

SCALE NONE SHEET 1E OF 15

DRAWING NO	DRAWING TITLE
REFERENCE DRAWINGS	

DS16

NOTE: INSULATE PIPING WITH 2" GLASS-FIBER (ASTM C547) R=.24 BTU•IN/H•FT•FT °F @ 75°F. OPERATING SURFACE TEMPERATURE OF -20° TO 115°F. UL LISTED VAPOR RETARDING JACKETING: REINFORCED WHITE KRAFT AND ALUMINUM FOIL LAMINATE. 0.02 PERM/IN. BEACH PUNCTURE RESISTANCE OF 50 UNITS. EXTERIOR SUITABLE FOR PAINTING WITH LATEX. METAL JACKET: ASTM B209, 0.020" THICK. INSULATION BANDS: 3/4-IN WIDE, 0.015-IN THICK GALVANIZED STEEL. METAL JACKET BANDS: 3/8" WIDE, 0.015" THICK ALUMINUM. INSULATING CEMENT: ASTM C195 HYDRAULIC-SETTING MINERAL WOOL. FINISHING CEMENT: ASTM C449. FIBROUS GLASS CLOTH: UNTREATED, 9 OZ/YD•YD WEIGHT. ADHESIVES: COMPATIBLE WITH INSULATION. EXPANSION TANK AND STORAGE TANK INSULATION AND JACKET. INSULATION ASTM C553, UL LISTED. JACKET: ASTM B209, 0.020" THICK. BEDDING COMPOUNDS: NONSHRINKING, PERMANENTLY FLEXIBLE. VAPOR-BARRIER COATING: NONFLAMMABLE, FIRE RESISTANT, POLYMERIC RESIN. INSULATING CEMEDNT: ASTM C195, HYDRAULIC-SETTING MINERAL WOOL. WIRE MESH: CORROSION-RESISTANT METAL; HEXAGONAL PATTERN.

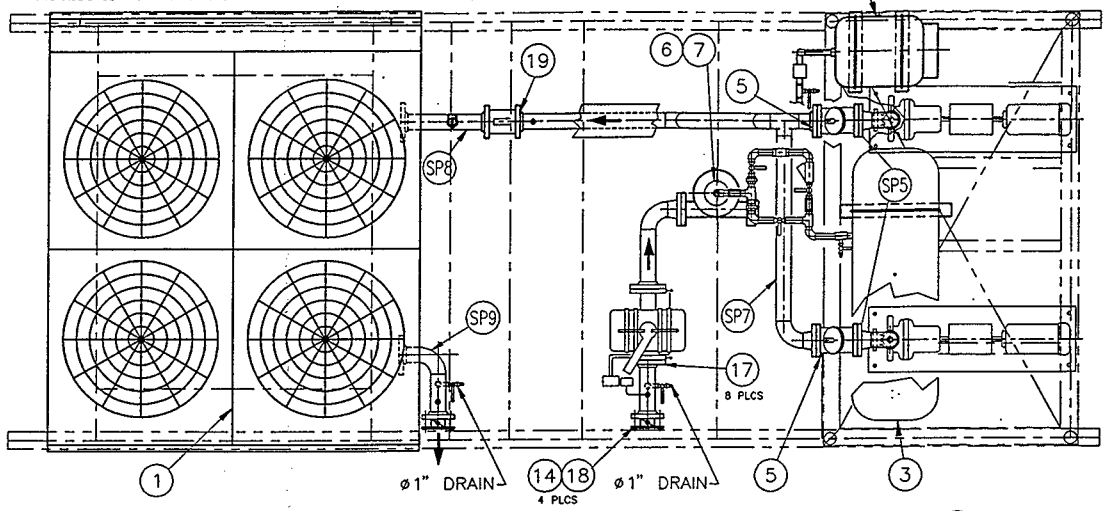

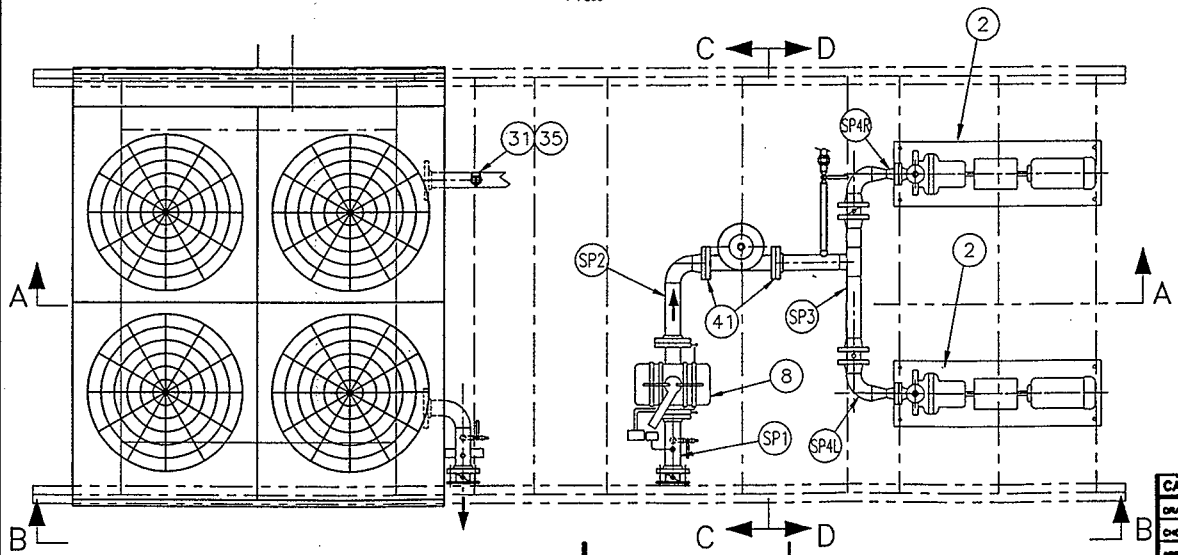

BILL OF MATERIALS				
ITEM	QTY	DESCRIPTION	REMARKS	EQUIP NOS
1	1	DUNHAM-BUSH/MCS ACDR 045	DB/MCS	R1361
2	2	PUMPS 734 PLUS 15 HP	ITT AC	P1364, P1365
3	1	80 GAL BYPASS FEEDER ø20"X62.5"	BRONNER ASME #412006200007	TK-1361
4	1	17.5 GAL EXP TANK	AMTROL ST-42VC	TK-1362
5	2	3" TRIPLEDUTY VALVE	BELLAGOSSET NO 305-35	HV13622,13624
6	1	AIR RELEASE VALVE	BELLAGOSSET NO 107A	HV13630
7	1	AIR SEPARATOR	BELLAGOSSET NO RL-3	TK-1363
8	1	3" DUPLEX STRAINER 125# C.I. 20 MESH SS	PECONY STRAIN MODEL 120	F-1364
9	6	3" SO RF FLANGE CS	ANSI B16.5	
10	7	3" 90° LR ELBOW CS BW	ANSI B16.9	
11	2	3" 45° LR ELBOW CS BW	ANSI B16.9	
12	8	3" WN RF FLANGE CS	ANSI B16.5	
13	30	3" SCH 40 PIPE CS	ASTM A53 GLB TYPE S OR E	
14	4	3" BUTTERFLY VALVE LUG	NIBCO FIG LD 3010	HV13620-13625
15	2	3" TEE CS BW	ANSI B16.9	
16	2	3" RF FLANGE 300# CS	ANSI B16.5	
17	10	3" NBG SETS FLG TO FLG	ASTM A307	
18	4	3" NBG SETS FLG TO VALVE	ASTM A325	
19	1	3" NBG SETS FLG TO FLW MTR	ASTM A307	
20	2	1 1/2" NBG SETS FLG TO FLG	ASTM A307	
21	2	1" NBG SETS FLG TO FLG	ASTM A307	
22	2	3"X1-1/2"CS SCH40 ECC RDR	ANSI B16.9	
23	2	1-1/2" WN RF FLG CS	ANSI B16.5	
24	2	1" WN RF FLG CS	ANSI B16.5	
25	2	3"X1" CS SCH 40 CONC RDR	ANSI B16.9	
26	4	1" 3000# THREDOLET	ANSI B16.3 FRG'D STL	
27	4	1/2" 3000# THREDOLET	ANSI B16.3 FRG'D STL	
28	5	1" UNION	ASTM A105	
29	5	1"x1"x1" THRD TEE MI 150#	ANSI B16.11	
30	9	1" 90 ELL MI 150# BLK	ANSI B16.11	
31	1	1" CS SCH 40 NIPPLES	ASTM A53 GR B	
32	2	1/2" BALL VALVE	WATTS B6000	
33	8	1" BALL VALVE	WATTS B6000	HV13627-13630 13634,136115,-16
34	1	1" WYE STRAINER (777S)	WW GRAINGER CAT NO 3P849	HV 13631
35	1	1" SAFETY RELIEF VALVE SET @ 83 PSI	KUNKLE 913 BDEM 01	PSV 1362
36	4	1"x1"x1/2" THRD TEE MI 150#	ANSI B16.11	
37	1	1" PRESSURE REDUCING VALVE ADJ. RANGE 0-35 PSI SET AT 18 PSIG	WATTS U5LP	PCV 1368
38	1	1" x 1-1/4" RED. BUSHING	ANSI B16.11	
39	11	ø1/2" CS SCH 40 NIPPLES	ASTM A53 GR B	
40	5	ø1/2" 90 ELL MI 150# BLK	ANSI B16.11	
41	2	ø3" THREAD 150# RF FLANGE MI	ANSI B16.11	
42	2	ø3/8" U-BOLT, 16" ID	-	
43	2	ø3/8" U-BOLT, 20" ID	-	
44	8	ø3/8" HEX NUTS	-	
45	2	6" x 3" ST x .120 WALL x 22" L	ASTM A500	
46	2	6" x 3" ST x .120 WALL x 18" L	ASTM A500	
47	2	1" X 3/4" RED. 150# MI	ANSI B16.11	
48	1	3/4" 90 ELL 150# MI	ANSI B16.11	
49	2	4"X3" REDUCING FLANGE 150#	ANSI B16.5	

REV NO	DESCRIPTION	REV BY DATE	CHK BY DATE	APVD DATE
B	REVISED PER FIELD CONDITIONS "AS BUILT"			

REVISIONS

DRAWING NO	DRAWING TITLE
	REFERENCE DRAWINGS

CADFILE S1A-AB CADCODE 1E:IBM:ACD2:12:SS

		DATE
DRAWN	RLN	08-08-95
CHECKED	W. PYKUS	11-17-95
APPROVED	X	x
APPROVED	X	x

PROJECT NO. 9503

McGowan Construction Services
Richland, WA 99352

CHILLER SKID
CHILLER PIPING
PLAN VIEWS

SIZE B | DWG NO 9503-SKID-EQUIP-A | REV B

SCALE NONE | SHEET 1A OF 15

HNF-2467, Rev.0

DS16

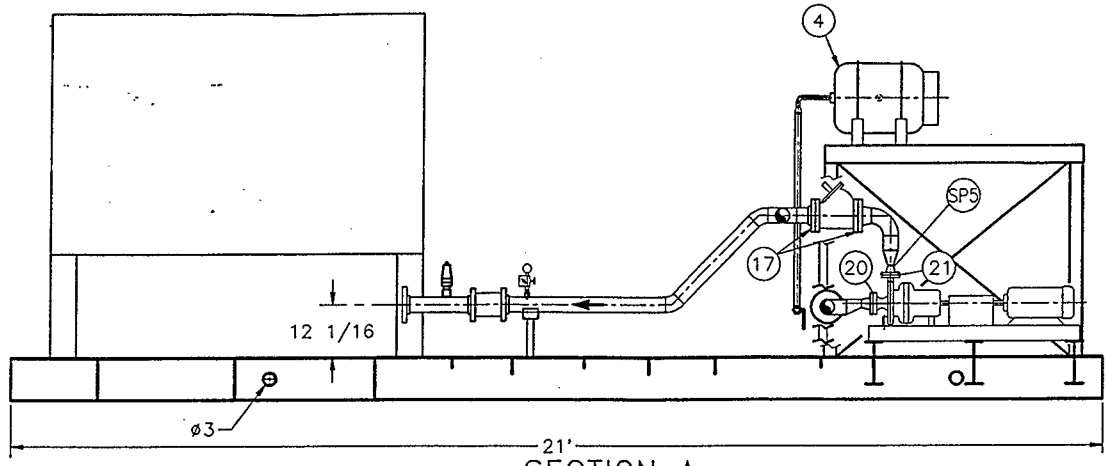

SECTION A

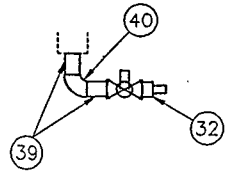

ø1/2" DRAIN DETAIL TYP.

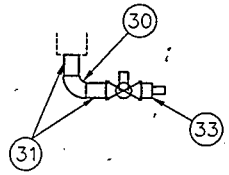

ø1" DRAIN DETAIL TYP.

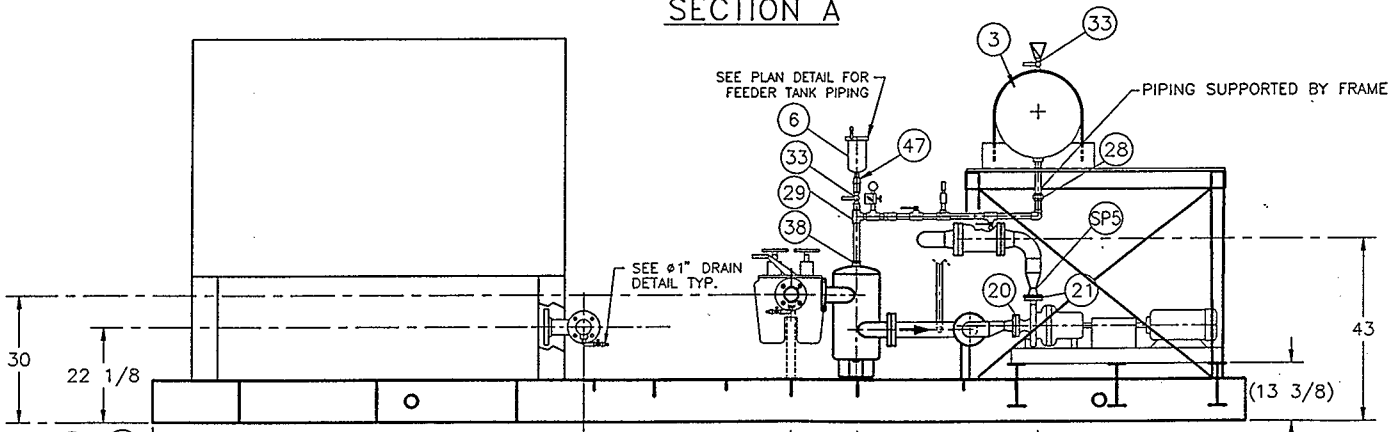

SECTION B

NOTE: SEE DWG 9503-SKID-EQUIP-A FOR BILL OF MATERIALS.

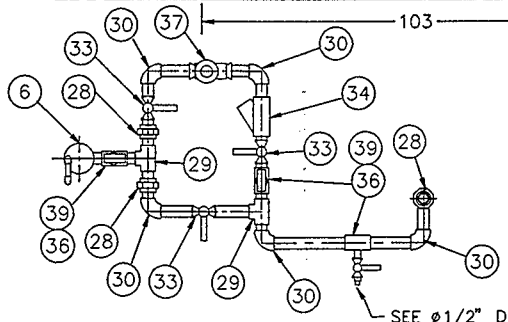

PLAN VIEW
1" FEEDER TANK PIPING

REV NO	DESCRIPTION	REV BY DATE	CHK BY DATE	APVD DATE	APVD DATE
B	REVISED PER FIELD CONDITIONS "AS BUILT"				

REVISIONS

CADFILE S1B-AB — CADCODE 1E:IBM:ACD2:12:SS

DRAWN RLN	DATE 08-08-95	McGowan Construction Services, Richland, WA 99352
CHECKED W. PYKUS	11-17-95	
APPROVED X	x	CHILLER SKID CHILLER PIPING ELEVATIONS
APPROVED X	x	

PROJECT NO. 9503

SIZE B — DWG NO 9503-SKID-EQUIP-B — REV B

SCALE NONE — SHEET 1B OF 15

DRAWING NO	DRAWING TITLE

REFERENCE DRAWINGS

DS16

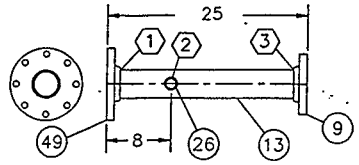

SP_8
QTY 1

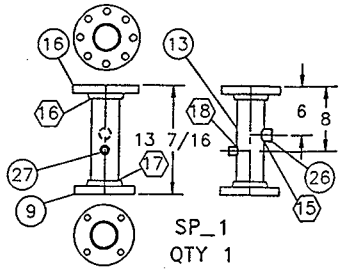

SP_1
QTY 1

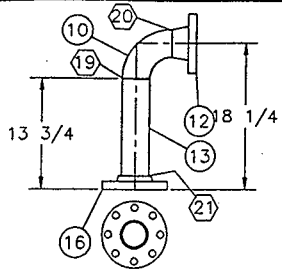

SP_2
QTY 1

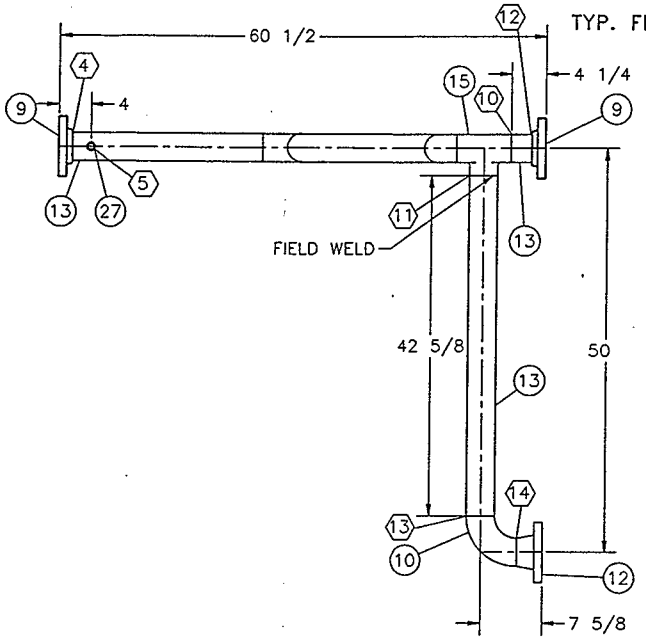

TYP. FLANGE

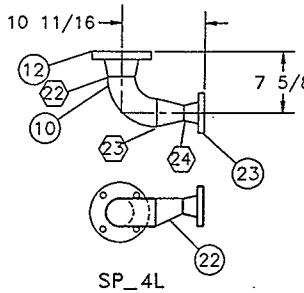

SP_4L
QTY 1

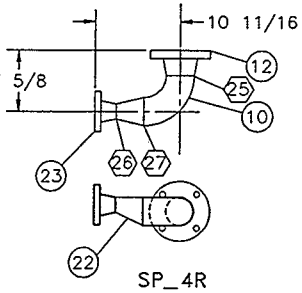

SP_4R
QTY 1

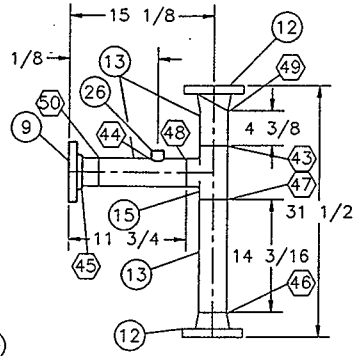

SP_3
QTY 1

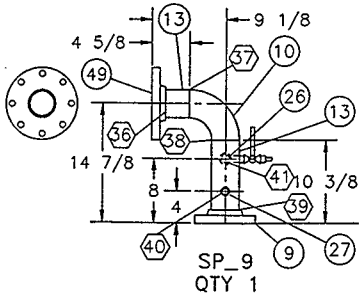

SP_9
QTY 1

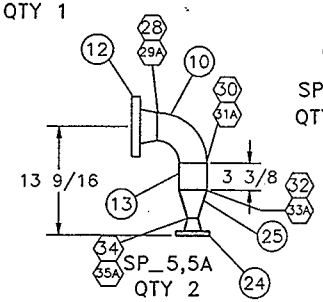

SP_5,5A
QTY 2

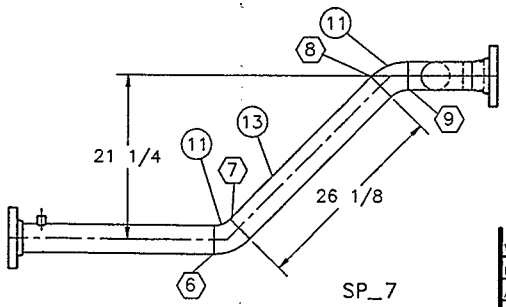

SP_7
QTY 1

NOTE: SEE DWG. 9503-SKID-EQUIP-A FOR BILL OF MATERIALS.

WELD PROCEDURE	WELD PER MCS-001
INSPECTION PROCEDURE	INSPECT PER ASME B31.3
ACCEPTANCE CRITERIA	100% VISUAL - FINAL WELD
DRAWING NO	DRAWING TITLE

REFERENCE DRAWINGS

REV NO	DESCRIPTION	REV BY DATE	CHK BY DATE	APVD DATE	APVD DATE
B	REVISED PER FIELD CONDITIONS "AS BUILT"				

REVISIONS

CADFILE S1C-AB
CADCODE 1E:IBM:ACD2:12:SS

		DATE
DRAWN	W. PYKUS	11/04/95
CHECKED	W. PYKUS	11/16/95
APPROVED	X	x
APPROVED	X	x

McGowan Construction Services
Richland, WA 99352

CHILLER SKID
LARGE BORE
PIPING SPOOL

PROJECT NO. 9503

SIZE B | DWG NO 9503-SKID-SPOOLS | REV B

SCALE NONE | SHEET 1C OF 15

DS8

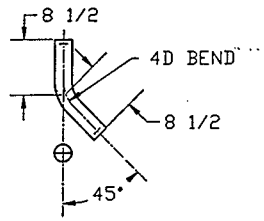

SPECIAL Ø2" CONDUIT SPOOL

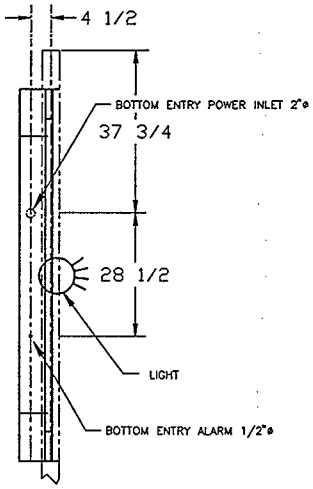

CONDUIT OPENINGS FOR POWER AND ALARM

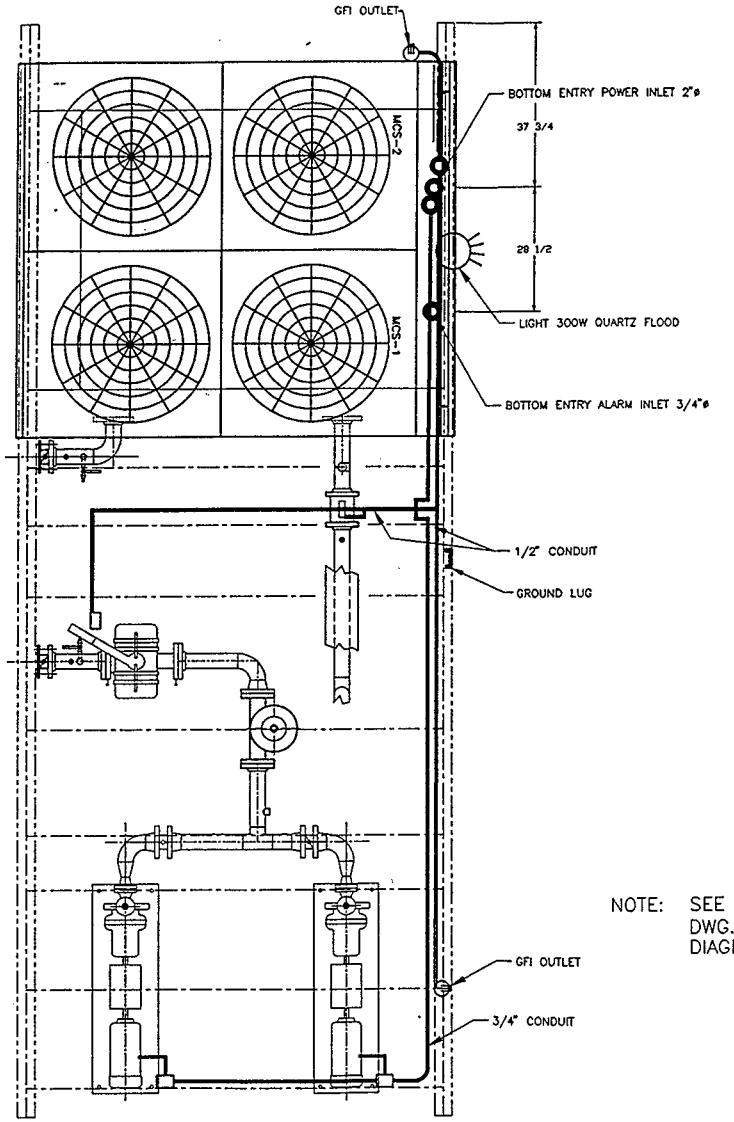

BILL OF MATERIALS

ITEM	QTY	DISCRIPTION	REMARKS
1	30	1/2" RGD,CONDUIT	WW GRAINGER 6XC30
2	30	3/4" RGD,CONDUIT	WW GRAINGER 6XC31
3	3	1/2" TEE	WW GRAINGER 5XC70
4	1	3/4" TEE	WW GRAINGER 5XC71
5	11	1/2" FLEX X THRD CONNECTOR	WW GRAINGER 5XC18
6	5	3/4" FLEX X THRD CONNECTOR	WW GRAINGER 5XC19
7	3	1/2" COUPLING	WW GRAINGER 5XC21
8	3	3/4" COUPLING	WW GRAINGER 5XC22
9	2	RECT SAL GANG BOX (5758)	WW GRAINGER CAT NO 384
10	2	VERT RAINPROOF GFCI COVER (5738)	WW GRAINGER PG 510
11	QTY	1/2" JIFFY STRAP	WW GRAINGER 6XC41
12	QTY	3/4" JIFFY STRAP	WW GRAINGER 6XC42
13	2	GFCI OUTLETS (DUPLEX) (52752)	WW GRAINGER PG 514
14	350LF	#10 THHN/TWN STRANDED COPPER CONDUCTOR	WW GRAINGER
15	140LF	#14 MTW/TWN STRANDED COPPER CONDUCTOR	WW GRAINGER
16	20LF	#8THHN/STRANDED COPPER WIRE	WW GRAINGER
17	QTY	GROUND LUGS	WW GRAINGER
18	1	300 WATT QUARTZ FLOOD LIGHT W/OPTIONAL SURFACE ADAPTER	STONCO EQ500L
19	QTY	1/2" SEALTIGHT FLEX	WW GRAINGER
20	QTY	3/4" SEALTIGHT FLEX	WW GRAINGER
21	1	2" CONDUIT SPOOL – (TBE)	–

NOTE: SEE DWG. DIAGRAM–WIRING ACDR45B 200,230,460 V. DWG. No 593440101 SHT 1 THROUGH 4 FOR WIRING DIAGRAM.

REV NO	DESCRIPTION	REV BY DATE	CHK BY DATE	APVD DATE	APVD DATE
B	REVISED PER FIELD CONDITIONS "AS BUILT"				

REVISIONS

CADFILE S1D–AB CADCODE 1E:IBM:ACD2:12:SS

		DATE
DRAWN	RLN	08-08-95
CHECKED	W. PYKUS	11-15-95
APPROVED	X	x
APPROVED	X	x

McGowan Construction Services
Richland, WA 99352

CHILLER SKID
POWER
CONDUIT RUN

PROJECT NO. 9503

SIZE B DWG NO 9503–SKID–ELECT REV B

SCALE NONE SHEET 1D OF 15

DRAWING NO	DRAWING TITLE

REFERENCE DRAWINGS

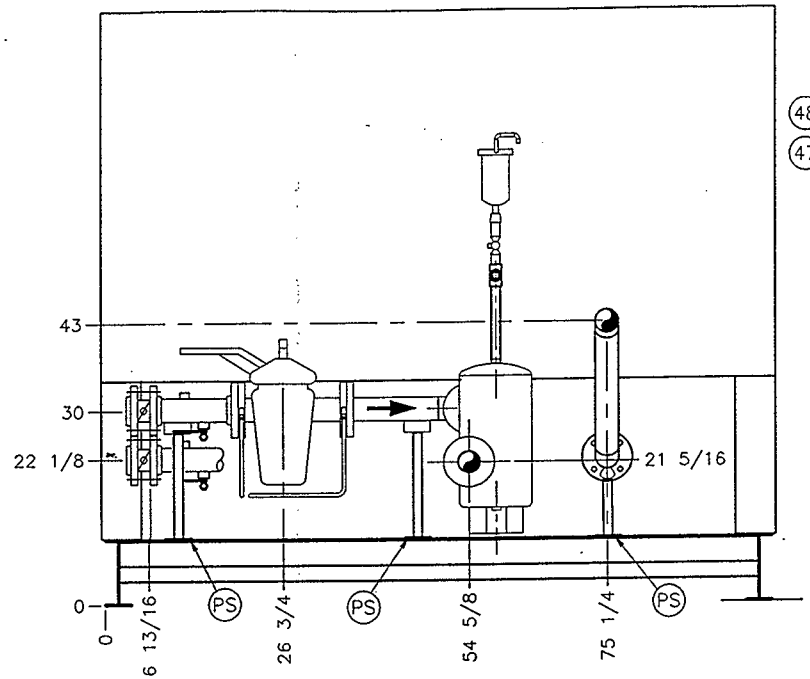

SECTION C

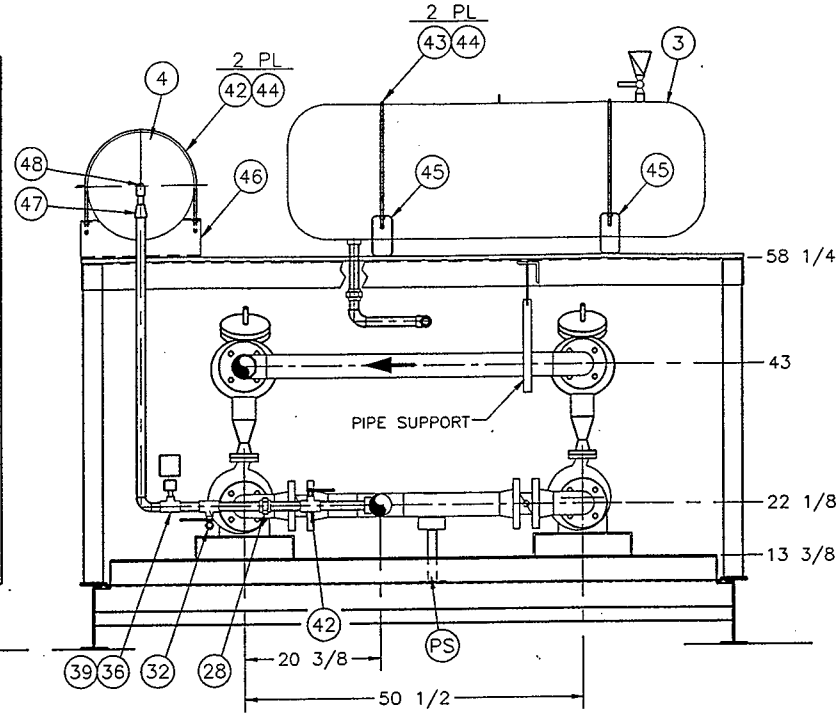

SECTION D

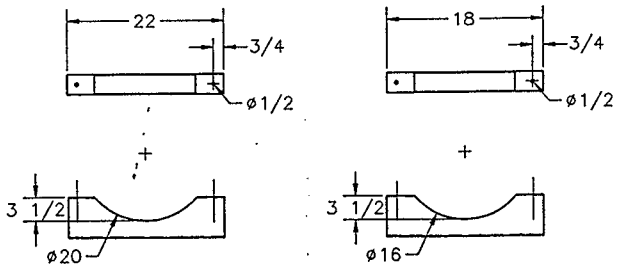

45 TANK SUPPORT

46 TANK SUPPORT

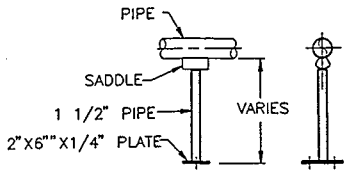

PS TYPICAL PIPE SUPPORT

(4 PLACES)

NOTE: SEE DWG. 9503-SKID-EQUIP-A FOR BILL OF MATERIALS.

REV NO	DESCRIPTION	REV BY DATE	CHK BY DATE	APVD DATE	APVD DATE
B	REVISED PER FIELD CONDITIONS "AS BUILT"				

REVISIONS

CADFILE S1F-AB | CADCODE 1E:IBM:ACD2:12:SS

DRAWN W. PYKUS	DATE 10-23-95	McGowan Construction Services, Richland, WA 99352
CHECKED W. PYKUS	11-17-95	CHILLER SKID ... CHILLER PIPING SECTIONS & DETAILS
APPROVED X	x	
APPROVED X	x	

PROJECT NO. 9503

SIZE B | DWG NO 9503-SKID-EQUIP-C | REV B

SCALE NONE | SHEET 1F OF 15

DRAWING NO	DRAWING TITLE

REFERENCE DRAWINGS

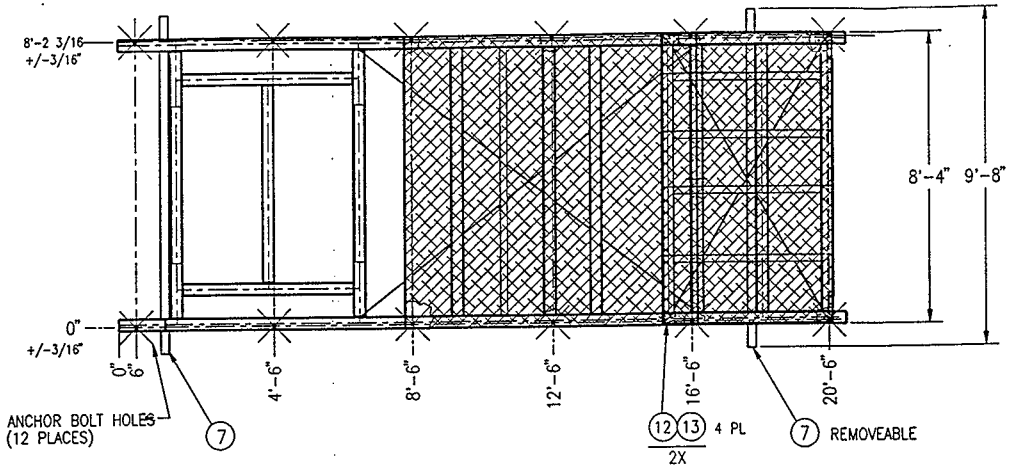

PLAN VIEW

AS BUILT
(ALL DIM. +/- 3/16")

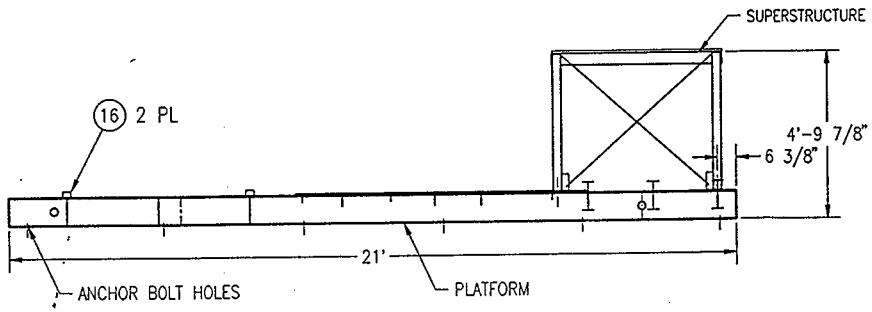

CHILLER SKID

PLATFORM ASEMBLY & ANCHOR BOLT LOCATION

NOTE: USE WILSON SLEEVE ON ALL ANCHOR BOLTS

BILL OF MATERIALS

ITEM	QTY	DESCRIPTION	
1	2	W10 x 12# x 21'-0" LONG	ASTM A36
2	3	W10 x 12# x 7'-11 5/16" LONG, COPE AS SHOWN	ASTM A36
3	2	W10 x 12# x 7'-11 5/16" LONG, COPE TO FIT W10 x 12#	ASTM A36
4	1	W10 x 12# x 5'-11 5/16" LONG, COPE TO FIT W10 x 12#	ASTM A36
5	2	W10 x 12# x 5'-3 5/16" LONG, COPE TO FIT W10 x 12#	ASTM A36
6	3	ANGLE 4" x 4" x 1/4" x 7'-11 5/16"	ASTM A36
7	2	PIPE ø2 1/2" SCH 40 x 9'-8" L	ASTM A53 TYPE F
8	16	ANGLE 3" x 3" x 3/8" x 5" LONG, W/4 ø9/16" HOLES	ASTM A36
9	2	ROD ø1/2" x 12'-4" LONG	ASTM A36
10	6	ANGLE 3" x 3" x 3/8" x 3 1/2" LONG, W/4 ø9/16" HOLES	ASTM A36
11	–	EXPANDED METAL FLOORING	ASTM A36
12	126	BOLT, HEX HD ø1/2"-12 NC x 1 1/2" L	ASTM A325
13	126	NUT, HEX ø1/2"-12 NC	ASTM A325
14	4	ANGLE 2 1/2" x 2 1/2" x 1/4" x 7'-11 5/16"	ASTM A36
15	8	ANGLE CLIP 2 1/2" x 2 1/2" x 1/4" x 2 1/2" LONG	ASTM A36
16	2	SPECIAL CHANNEL 3" x 2" x .180" WALL x 54" LONG	ASTM A36

ANCHOR POINT REACTIONS IN LBS.

CONSTRUCTION POINT	CASE (I) (2)		CASE (II) (2)		CASE (III) (2)	
	VERT	SHEAR (1)	VERT	SHEAR (1)	VERT	SHEAR (1)
1	1330	–	2076	586	584	586
2	1330	–	2076	586	584	586
3	1732	–	2454	546	1010	546
4	1330	–	584	586	2076	586
5	1330	–	584	586	2076	586
6	1732	–	1010	546	2454	546

1) SHEAR FORCES ARE THE RESULTANT OF THE TRANSVERSE FORCE COMBINED WITH 30% LONGITUDINAL FORCE

2) LOAD CASES– P= VERTICAL WEIGHT
$F^{(S1)}$ =TRANSVERSE FORCE
$F^{(S2)}$ =OPPOSITE DIRECTED TRANSVERSE FORCE

CASE (I)= P
CASE (II)= $P+F^{(S1)}$
CASE (III)= $P+F^{(S2)}$

3) INCREASING NUMBER OF ANCHOR POINTS FROM THOSE SHOWN WILL REDUCE ALL REACTIONS

REV NO	DESCRIPTION	REV BY DATE	CHK BY DATE	APVD DATE	APVD DATE
B	REVISED PER FIELD CONDITIONS "AS BUILT"				

REVISIONS

CADFILE S1J-AB | CADCODE 1E:IBM:ACD2:12:SS

		DATE
DRAWN	W. PYKUS	10-25-95
CHECKED	W. PYKUS	11-16-95
APPROVED	X	x
APPROVED	X	x

McGowan Construction Services
Richland, WA 99352

CHILLER SKID
PLATFORM ASSEMBLY
& BOM

SIZE B | DWG NO 9503-SKID-BASE | REV B

SCALE NONE | SHEET 1J OF 15

PROJECT NO. 9503

WELD PROCEDURE	WELD PER MCS-001
INSPECTION PROCEDURE	INSPECT PER AWS D1.1
ACCEPTANCE CRITERIA	100% VISUAL – FINAL WELD

DRAWING NO | DRAWING TITLE

REFERENCE DRAWINGS

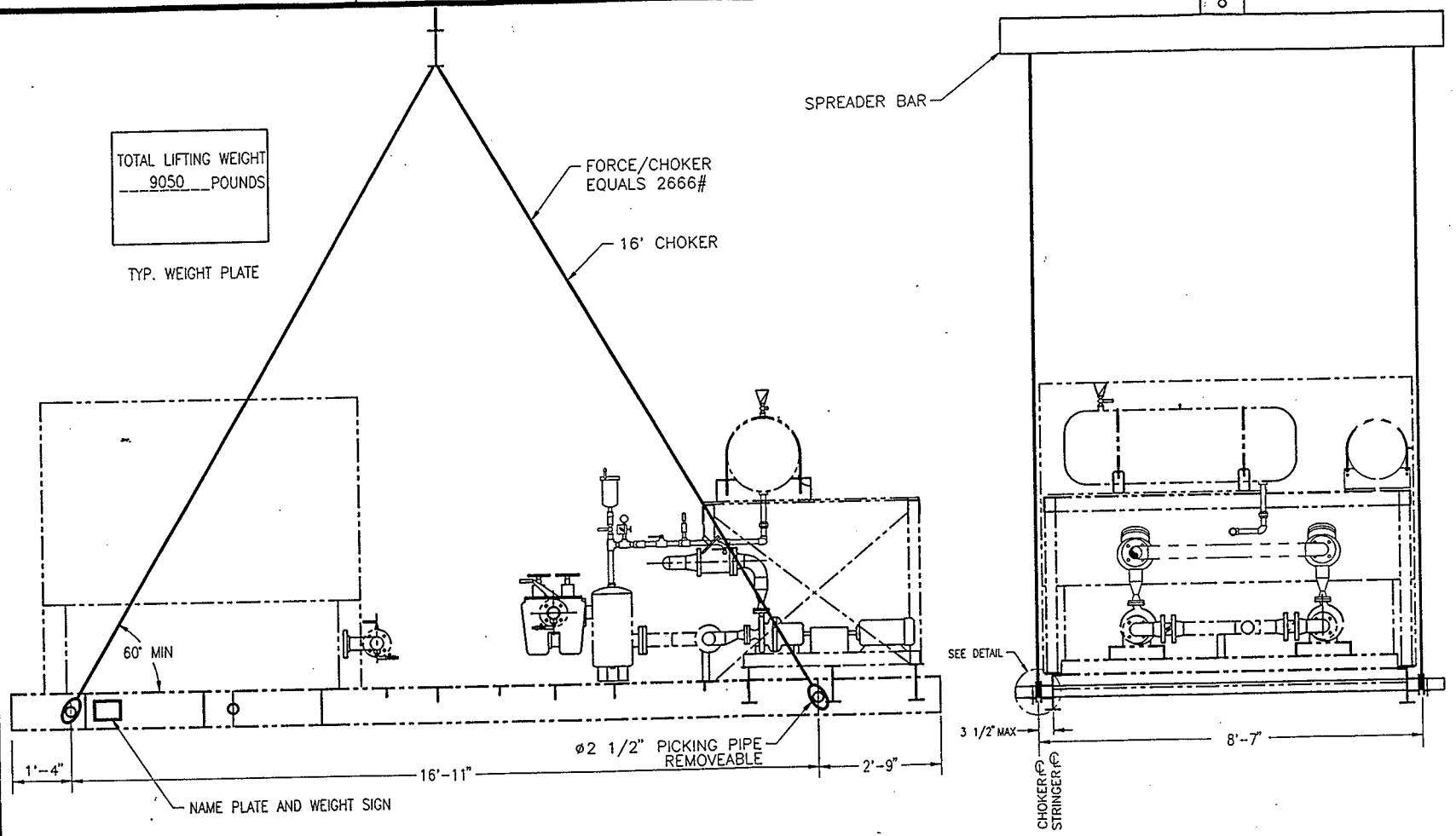

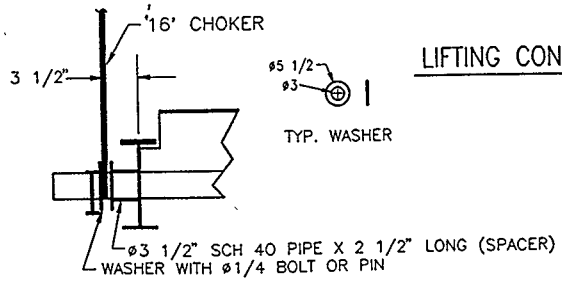

LIFTING CONFIGURATION

REV NO	DESCRIPTION	REV BY DATE	CHK BY DATE	APVD DATE	APVD DATE
B	REVISED PER FIELD CONDITIONS "AS BUILT"				

REVISIONS

CADFILE S1G-AB | CADCODE 1E:IBM:ACD2:12:SS

DRAWN W. PYKUS	DATE 11-03-95	McGowan Construction Services, Richland, WA 99352
CHECKED W. PYKUS	11-17-95	CHILLER SKID LIFTING & RIGGING DETAILS
APPROVED X	x	
APPROVED X	x	

PROJECT NO. 9503

SIZE B | DWG NO 9503-SKID-LIFTING | REV B

SCALE NONE | SHEET 1G OF 15

DRAWING NO | DRAWING TITLE

REFERENCE DRAWINGS

W320-24-024

Electrical Equipment Pad (241-C-51)

KAISER ENGINEERS HANFORD	CALCULATION IDENTIFICATION AND INDEX	Page i of iii Date 7-29-94

This sheet shows the status and description of the attached Design Analysis sheets.

Discipline Structural WO/Job No. ER4319/W-320 Calculation No. W320-24-024

Project No. & Name Project W-320, Tank 241-C-106 Sluicing

Calculation Item Electrical Equipment Pad (241-C-51)

These calculations apply to:

Dwg. No. H-2-818458 sh. 1 & H-2-818461 Rev. No. 0

Dwg. No. N/A Rev. No.

Other (Study, CDR) N/A Rev. No.

The status of these calculations is:

[] Preliminary Calculations

[X] Final Calculations

[] Check Calculations (On Calculation Dated)

[] Void Calculation (Reason Voided)

Incorporated in Final Drawings? [X] Yes [] No

This calculation verified by independent "check" calculations? [] Yes [X] No

Original and Revised Calculation Approvals:

	Rev. 0 Signature/Date	Rev. 1 Signature/Date	Rev. 2 Signature/Date
Originator	8-17-94	3/25/96	
Checked by	2/10/95 8/23/94	5/13/96	
Approved by	2/10/95	5/13/96	
Checked Against Approved Vendor Data		4/7/96	

INDEX

Design Analysis Page No.	Description
1-2	Objective, Criteria, Data, Assumptions, Method, References, and Conclusion.
3-9 ,9a	Calculations
Attach 1	H-2-818458, STRUCTURAL C-FARM MISC. CONCRETE PADS & H-2-818461 (AY -Farm)
Attach 2	Ref 9- Original Design Justification Calcs
Attach 3	AY-Farm Skid Floor Frame Mods (ECN W-320-230)
Attach 4	Vendor Data - VSD

REV 1: Add Page 9a, Attach 2,3,4; Revise Page 1, 2 , 4, 9

CALCULATION CROSS INDEX (Typical)

Subject Calculation No. W320-24-024

Subject Calculation Revision No.	Superceded by Calculation No.	These interfacing calculation/documents provide input to the subject calculation, and if revised may require revision of the subject calculation.		Results and conclusions of the subject calculation are used in these interfacing calculations and/or documents.		Does the output interface calculation/ documents require revision?		Has the output interface calculation/ documents been revised?		Discipline manager's signature and date indicating evaluation complete.
		Calculation/Document No.	Revision No.	Calculation/Document No.	Revision No.	Yes	No	Yes	No	
0	–	H-2-818458 SH. 1	0	N/A	–		✓		N/A	2/10/95
0	–	H-2-818461	0	N/A	–		✓		N/A	

HNF-2467, Rev.0

DESIGN VERIFICATION SCREENING CRITERIA

iii of iii

Project/Document No. W-320/W320-24-024

When the design or design change affects hardware, formal design verification must be performed if one or more of the following questions must be answered affirmatively (YES).

YES	NO	
	✓	1. Does the design or design change involved meet the established criteria to be considered Safety Class 1 or 2?
	✓	2. Does this design or design change cause or permit changes to Safety Class 1 or 2 instrument or alarm setpoints outside of previously approved operational limits?
	✓	3. Does this design or design change significantly affect the nuclear safety consequences of a malfunction or failure of the structure, system, or component?
	✓	4. Does this design or design change involve or change design that has previously undergone formal design verification?

Assigned Lead Engineer — Date: 2/10/95

Responsible Discipline Manager — Date: 2/10/95

Original Design Package Distribution:

- Project Manager
- Design Verification Officer
- Engineering Document Control

Design Change Distribution:

- Attach to Engineering Change Notice

KEH-1981.00 (06/91)

KAISER ENGINEERS HANFORD

Calc. No. W320-24-024
Revision ~~0~~ 1
Page No. 1 of 9

DESIGN ANALYSIS

Client WHC
Subject Electrical Equipment Pad (241-C-51)
Location 200E

WO/Job No. ER4319/W-320
Date 7-29-94
Checked
Revised 3-25-96

By J.R. Booth JRB
By
By

OBJECTIVE: The objective of this calculation is to design SC3 structural concrete pads and determine expansion anchor requirements to support and secure SC3 Electrical Enclosures.

CRITERIA:

1. Functional Design Criteria for Tank 241-C-106 Waste Retrieval, Project W-320; Document No. WHC-W320-FDC-001, Rev.2.

2. SDC 4.1, Rev. 11.

3. DOE order 6430.1a

DATA:

1. f'c=4000 psi

2. fy=60 ksi for rebar

3. 1/2" dia. expansion anchors with 2 1/4" minimum embedment. Values for tension and shear assumed from SDC 4.2 are conservative.

ASSUMPTIONS: See body of calc.

METHOD: MATHCAD 4.0

REFERENCES:

1. American Concrete Institute (ACI). ACI 318-89 (Revised 1992).

2. American Concrete Institute (ACI). ACI SP-17(91).

3. American Society of Civil Engineers (ASCE). ASCE 7-88.

4. Standard ARCH-Civil Design Criteria, SDC-4.1. Design Loads for Facilities. Rev. 11.

5. Standard Arch-Civil Design Criteria, SDC-4.2. Design and Installation of Expansion Anchors. Rev. 0.

6. Uniform Building Code (UBC-91).

7. Design and Evaluation Guidelines for Department of Energy Facilities Subjected to Natural Phenomena Hazards. UCRL 15910, June 1990.

8. Final Report of Geotechnical Engineering Studies, W-320 Waste Retrieval and Sluicing System, 200 East Area, Hanford Site. Prepared by Shannon and Wilson, Inc. for Kaiser Engineers Hanford Company. April 1994.

WJM 5/13/96 ⚠

9. Vendor Information File: Olympic Tool & Engineering (AY-Farm Electrical Equipment Skid/Enclosure- Dwgs 51001, Sht 1-3 & Calculations.

KAISER ENGINEERS HANFORD

Calc. No. W320-24-024
Revision ~~0~~ 1
Page No. 2 of 9

DESIGN ANALYSIS

Client WHC
Subject Electrical Equipment Pad (241-C-51)
Location 200E

WO/Job No. ER4319/W-320
Date 7-29-94
Checked
Revised 3-25-94

By J.R. Booth JRB
By
By

CONCLUSION:

The concrete slab~~s~~ will be 8" thick and be reinforced with #5 rebar distributed as shown on H-2-818458, sh. 1 (Equivalent to 0.31 sq.in./ft). ~~Four 1/2" dia. expansion anchors with 2 1/4" min. embed, one at each corner, will be sufficient to anchor the skid to the slab.~~ Two 1/2" dia. exp anchors with 2 1/4" min embed. on all (4) sides will be used to anchor skid to the slab.
~~A smaller Electrical Equipment Pad will be located outside AY Farm (See Dwg's H-2-818461 and H-2-818695 SH. 3). The design is similar and the loads are smaller; therefore, a Pad with the same rebar requirement will be adequate by inspection. The new Electrical Equipment Pad for AY Farm is shown on H-2-818461.~~

LWJM 5/13/96 1

A similar Electrical Equipment Pad will be required outside AY-Farm (See Dwg's H-2-818461 and H-2-818695 SH 3) Loading conditions are similar. Calculations for C-Farm Electrical Equipment Pad adequately envelope loads for AY-Farm Pad. Provide same pad thickness and rebar size/pattern as C-farm.

See page 9a for an evaluation of required field modifications to the AY-Farm Electrical Equipment Skid floor framing. The Ay-Farm Electrical Equipment Skid/Enclosure design/fabrication was provided by Olympic Tool & Engineering.

KAISER ENGINEERS
HANFORD

DESIGN ANALYSIS

Calc. No. W320-24-024
Revision 0
Page No. 3 of 9

Client: Westinghouse Hanford Company | WO/Job No. ER4319/W-320
Subject Electrical Equipment Pad (241-C-51) | Date 6/24/94 | By JR Booth
Checked 8/23/94 | By
Location: 200E | Revised | By

DESIGN MCC CONCRETE PAD

Determine Design Loads:

1. Snow (REF. ASCE 7-88, pg. 23-27)

$C_e := 0.9$

$C_t := 1.1$

$I := 1.2$

$p_g := 15 \cdot \frac{lb}{ft^2}$ Ref. SDC 4.1

$p_f := 0.7 \cdot C_e \cdot C_t \cdot I \cdot p_g$

$p_f = 12.474 \cdot \frac{lb}{ft^2}$ Use $p_f := 20 \cdot \frac{lb}{ft^2}$ (Minimum Snow Load per SDC 4.1)

$S := p_f (10 \cdot ft \cdot 12 \cdot ft)$

2. Wind: (Ref. SDC 4.1 and ASCE 7-88, section 6)
Gross dimensions: 12' wide X 10' wide X 10' Eve height.
Exposure Class=C (SDC 4.1, pg.13)
Wind Speed=70 mph (SDC 4.1, pg.13)
Importance Factor=1.07 (SDC 4.1, pg.13)
Sign convention: + pressure acting on surface, - pressure acting away from surface.
qz=qh

$I := 1.07$

$V := 70$

$K_z := 0.80$ (Table 6 of ASCE 7-88)

$q_z := 0.00256 \cdot K_z \cdot (I \cdot V)^2 \cdot \frac{lb}{ft^2}$ (Velocity pressure, Eq.3 of ASCE 7-88)

$q_z = 11.489 \cdot \frac{lb}{ft^2}$

$G_h := 1.32$ (Gust Response Factor, Table 8)

$C_{pw} := 0.8$ Windward (External Pressure Coeff., Fig. 2)

$C_{pl} := -0.5$ Leeward

$C_{ps} := -0.7$ Sidewall

$GC_{piw} := 0.75$ (Internal Pressure Coeff., Table 9 windward)

$GC_{pil} := -0.25$ (Internal Pressure Coeff., Table 9 leeward)

Wall Pressure

$W_{ww1} := q_z \cdot G_h \cdot C_{pw} - q_z \cdot GC_{piw}$ (Windward Wall Pressure, Table 4)

$W_{ww1} = 3.516 \cdot \frac{lb}{ft^2}$

$W_{ww2} := q_z \cdot G_h \cdot C_{pw} - q_z \cdot GC_{pil}$

$W_{ww2} = 15.005 \cdot \frac{lb}{ft^2}$

KAISER ENGINEERS
HANFORD

DESIGN ANALYSIS

Calc. No. W320-24-024
Revision 01
Page No. 4 of 9

Client: Westinghouse Hanford Company | WO/Job No. ER4319/W-320
Subject Electrical Equipment Pad (241-C-51) | Date 7/29/94 | By JR Booth JRB
Checked | By
Location: 200E | Revised 3-25-96 | By

$W_{lw1} := q_z \cdot G_h \cdot C_{pl} - q_z \cdot GC_{piw}$ $\quad W_{lw1} = -16.2 \cdot \frac{lb}{ft^2}$ (Leeward Wall Pressure)

$W_{lw2} := q_z \cdot G_h \cdot C_{pl} - q_z \cdot GC_{pil}$ $\quad W_{lw2} = -4.711 \cdot \frac{lb}{ft^2}$

$W_{sw} := q_z \cdot G_h \cdot C_{ps} - q_z \cdot GC_{piw}$ $\quad W_{sw} = -19.233 \cdot \frac{lb}{ft^2}$ (Sidewall Pressure)

$W := W_{ww2} - W_{lw2}$ $\quad W = 19.716 \cdot \frac{lb}{ft^2}$ (Windload in either direction)

Roof Pressure

$h := 10 \cdot ft$ Eave HT.
$L := 12 \cdot ft$ Length
$\frac{h}{L} = 0.833$

$C_{pr} := -0.7$ Roof pressure coeff. same for both directions since roof slope = 0 deg.

$W_r := q_z \cdot G_h \cdot C_{pr} - q_z \cdot GC_{piw}$

$W_r = -19.233 \cdot \frac{lb}{ft^2}$ Pressure acting away from surface

3. Live Floor Load

$L := \left(100 \cdot \frac{lb}{ft^2}\right) \cdot (10 \cdot ft \cdot 12 \cdot ft)$ (Nominal floor load)

$L = 1.2 \cdot 10^4 \cdot lb$

4. Dead Loads.

a. C-Farm: Slab dimensions 13'-6" x 11'-6" x 0'-8" (H-2-818458, sh)

$Wc := 150 \cdot \frac{lb}{ft^3} \cdot \left(13.5 \cdot ft \cdot 11.5 \cdot ft \cdot \frac{8}{12} \cdot ft\right)$ $\quad Wc = 1.552 \cdot 10^4 \cdot lb$ (Weight of concrete slab)

$We := 3073 \cdot lb$ (Weight of electrical equipment in enclosure per electrical estimated weights)

$Ws := 3425 \cdot lb$ (Weight of skid and attached enclosure, estimated)

$D := We + Ws$ (Total dead load acting on slab at C-Farm controls dead loading and shall be used for load cases)

$D = 6.498 \cdot 10^3 \cdot lb$

b. AY-Farm: Slab dimensions 15'-0" ~~x 6'-0"~~ 9'-0" x 0'-8" (H-2-818461)

$W_{ay} := 150 \cdot \frac{lb}{ft^3} \cdot \left(15 \cdot ft \cdot \cancel{6}\,9 \cdot ft \cdot \frac{8}{12} \cdot ft\right)$ $\quad W_{ay}$ ~~$= 9 \cdot 10^3 \cdot lb$~~ 13,500 lbs (Weight of concrete slab)

W_{eay} ~~$:= 1000 \cdot lb$~~ 2800 lbs (Weight of electrical equipment in enclosure per electrical estimated weights)

$W_{say} := 3200 \cdot lb$ (Weight of skid and attached enclosure, estimated. Reduced based on smaller overall dimensions)

$D_{ay} := W_{eay} + W_{say}$

D_{ay} ~~$= 4.2 \cdot 10^3 \cdot lb$~~ 6000 lbs

5/13/96

KAISER ENGINEERS
HANFORD

DESIGN ANALYSIS

Calc. No. W320-24-024
Revision 0
Page No. 5 of 9

Client: Westinghouse Hanford Company
WO/Job No. ER4319/W-320
Subject Electrical Equipment Pad (241-C-51)
Date 7/29/94 By JR Booth JRB
Checked 8/23/94 By J.S. Rapert
Location: 200E
Revised By

5. Seismic: Ref. SDC 4.1, UCRL 15910, and UBC-91.

Ground motion shall be taken 100% in one perpendicular direction plus 30% in the other direction combined in a SRSS basis.

Critical Damping = 5% for Safety class 3 per SDC 4.1.

$Z := 0.12$ Peak Ground Acceleration (SDC 4.1)
$I := 1.25$ Importance Factor (SDC 4.1)
$C := 2.12$ Spectral amplification factor (SCD 4.1)

$Ws := D$ Weight of enclosure acting on slab.

$R_w := 6$ Reduction Factor (UBC 91, Table No. 23-O)

$V := \frac{Z \cdot I \cdot C \cdot Ws}{R_w}$ Base Shear

$V_{ew} := V$

$V_{ew} = 344.394 \cdot lb$

$V_{ns} := 0.3 \cdot V$

$V_{ns} = 103.318 \cdot lb$

$E := \sqrt{V_{ew}^2 + V_{ns}^2}$

$E = 359.558 \cdot lb$ Earthquake Load

6. Load Combinations
a. UBC 91 load combinations, pg. 148. The zero loads below are to make the MathCAD equations work.

$D = 6.498 \cdot 10^3 \cdot lb$ Dead Load
$D_1 := 0 \cdot lb$ Dead Load (horizontal)

$L_r := 0 \cdot lb$ Snow Load and Ashfall-Roof Live Load

$L_r = 0 \cdot lb$

$L_1 := 0 \cdot lb$ Horizontal live load

$E_1 := 0 \cdot lb$ Vertical seismic

$S_1 := 0 \cdot lb$ 0 snow load horizontal

1. $U := D + L + L_r$

$U = 1.85 \cdot 10^4 \cdot lb$

2. $U := D + L + W_r \cdot (10 \cdot ft \cdot 12 \cdot ft)$

$U = 1.619 \cdot 10^4 \cdot lb$

$U_{11} := D_1 + L_1 + W \cdot (10 \cdot ft \cdot 10 \cdot ft)$ (Wind controls horizontal loading)

$U_{11} = 1.972 \cdot 10^3 \cdot lb$

$U_{12} := D_1 + L_1 + W \cdot (10 \cdot ft \cdot 12 \cdot ft)$

$U_{12} = 2.366 \cdot 10^3 \cdot lb$

$U := D_1 + L_1 + E$

$U = 359.558 \cdot lb$

3. $U := D + L + W_r \cdot (12 \cdot ft \cdot 10 \cdot ft) + \frac{S}{2}$

   $U = 1.739 \cdot 10^4 \cdot lb$

4. $U_{13} := D + L + S + \frac{W_r \cdot (12 \cdot ft \cdot 10 \cdot ft)}{2}$ (Controls vertical loading)

   $U_{13} = 1.974 \cdot 10^4 \cdot lb$

5. $U := D_1 + L_1 + S + E_1$

   $U = 2.4 \cdot 10^3 \cdot lb$

b. Strength Design load cases. ASCE 7-88.

1. $U := 1.4 \cdot D$

   $U = 9.097 \cdot 10^3 \cdot lb$

2. $U_{21} := 1.2 \cdot D + 1.6 \cdot L + 0.5 \cdot S$ (Controlling vertical case)

   $U_{21} = 2.82 \cdot 10^4 \cdot lb$

3. $U := 1.2 \cdot D + 1.6 \cdot S + 0.5 \cdot L$

   $U = 1.764 \cdot 10^4 \cdot lb$

4. $U_{22} := 1.2 \cdot D_1 + 1.3 \cdot W \cdot (12 \cdot ft \cdot 10 \cdot ft) + 0.5 \cdot L_1 + 0.5 \cdot S_1$ (Controlling side loads)

   $U_{22} = 3.076 \cdot 10^3 \cdot lb$

   $U_{23} := 1.2 \cdot D_1 + 1.3 \cdot W \cdot (10 \cdot ft \cdot 10 \cdot ft) + 0.5 \cdot L_1 + 0.5 \cdot S_1$

   $U_{23} = 2.563 \cdot 10^3 \cdot lb$

5. $U := 1.2 \cdot D_1 + 1.5 \cdot E + 0.5 \cdot L$

   $U = 6.539 \cdot 10^3 \cdot lb$

6. $U := 0.9 \cdot D_1 - 1.3 \cdot W \cdot (12 \cdot ft \cdot 10 \cdot ft)$

   $U = -3.076 \cdot 10^3 \cdot lb$

c. Determine controlling vertical ACI load case.

1. $U_{31} := 1.4 \cdot D + 1.7 \cdot L$

   $U_{31} = 2.95 \cdot 10^4 \cdot lb$

7. Check Soil Bearing Properties

a. Check Qmax against Qapplied.

$Q_{max} := 4000 \cdot \frac{lb}{ft^2}$ (Shannon an Wilson Report pg. 10)

$Q_{applied} := \frac{U_{13} + Wc}{(13.5 \cdot ft \cdot 11.5 \cdot ft)}$

$Q_{applied} = 227.176 \cdot \frac{lb}{ft^2}$ Foundation Bearing pressure OK.

Note: Due to the low bearing pressure and minimal overturning moment, eccentric fondation loading is not considered.

b. Check longitudinal sliding.

$F_f := 0.35 \cdot (D + Wc)$ (Lateral Sliding coefficient given in UBC, pg. 590)

$F_f = 7.708 \cdot 10^3 \cdot lb$ Resistance to sliding by friction is sufficient in both directions.

8. Check overturning moment (See figure below)

$M_{ot} := (W \cdot 12 \cdot ft \cdot 10 \cdot ft) \cdot 5 \cdot ft$ Overturning moment applied at the estimated mid-height of the enclosure.

$M_{ot} = 1.183 \cdot 10^4 \cdot lb \cdot ft$

$M_r := D \cdot 5.75 \cdot ft$ Resisting moment to overturning

$M_r = 3.736 \cdot 10^4 \cdot lb \cdot ft$

$\frac{M_{ot}}{M_r} = 0.317$ OK, since less than 2/3.

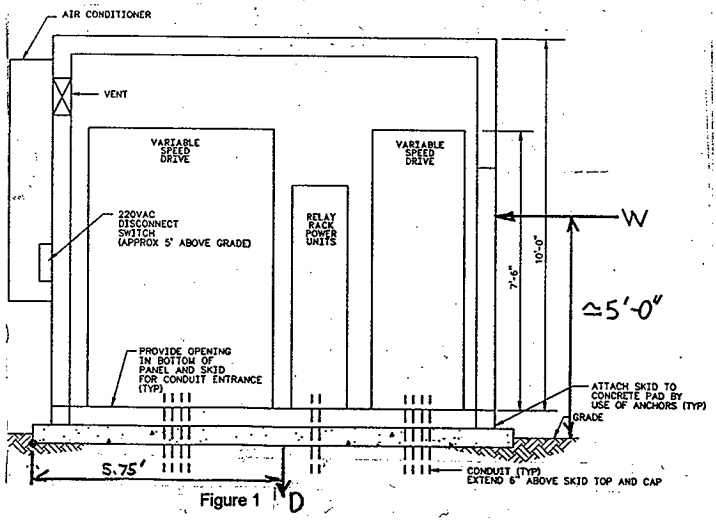

Figure 1

9. Concrete Slab Design. Using the design proceedures of ACI SP-17(91).

$kip := 1000 \cdot lb$ $f_c := 4000$ psi $f_y := 60000$ psi

$l := 11.5 \cdot ft$ Length of slab in ft

$w_u := 1.4 \cdot \left(150 \cdot \frac{lb}{ft^3} \cdot \frac{8}{12} \cdot ft \cdot 1 \cdot ft\right)$

$w_u = 140 \cdot \frac{lb}{ft}$

KAISER ENGINEERS
HANFORD

DESIGN ANALYSIS

Calc. No. W320-24-024
Revision 0
Page No. 8 of 9

Client: Westinghouse Hanford Company
Subject Electrical Equipment Pad (241-C-51)
Location: 200E

WO/Job No. ER4319/W-320
Date 7/29/94 By JR Booth
Checked 8/23/94 By L.A. Rupert
Revised By

$$M_u := \frac{\left(\frac{U_{31}}{8}\cdot\frac{9}{12}\cdot ft\right)+\frac{w_u\cdot(l)^2}{8}}{1000\cdot lb\cdot l\cdot ft}$$

The skid will rest on a total of 8 plates welded along the bottom of the skids to distribute the weight throughout the slab.

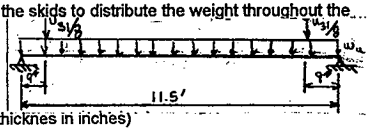

$M_u = 5.08$

$h := 8$ (Estimated Slab thicknes in inches)

$d := h - 3 - 0.625$ $d = 4.375$ (Effective depth of slab with 3" min. cover for rebar)

$b := 12$ (Unit width of slab in inches)

$\rho_{max} := 0.0214$ SP17, Flexure 2.2

$$F := \frac{d^2}{1000}$$

$F = 0.019$

$K_n := \frac{M_u}{F}$ $K_n = 265.39$

$a_n := 4.29$

$$A_s := \frac{M_u}{d\cdot a_n}$$ Area of steel required per 12" strip of concrete, sq. in

$A_s = 0.271 \ in^2$

$\rho_{min} := 0.0018$ For grade 60 steel

$A_{smin} := \rho_{min}\cdot b\cdot h$ Required steel area is greater than minimum required.

$A_{smin} = 0.173 \ in^2$

Check shear

$$V_u := \frac{U_{13}}{8} + w_u\cdot\frac{l}{2}$$

$V_u = 3.273\cdot 10^3 \cdot lb$

$b_w := 12 \ in$ $\phi := 0.85$

$V_c := \phi\cdot\left(2\cdot\sqrt{f_c}\right)\cdot b_w\cdot d$

$V_c = 5.645\cdot 10^3 \ lb$ Ok

Use #5 bars spaced 12" O.C. See H-2-818458 for sketch of reinforcing.

KAISER ENGINEERS
HANFORD

DESIGN ANALYSIS

Calc. No. W320-24-024
Revision 0 1
Page No. 9 of 9

Client: Westinghouse Hanford Company
Subject Electrical Equipment Pad (241-C-51)
Location: 200E

WO/Job No. ER4319/W-320
Date 7/29/94 By JR Booth
Checked 8/23/94 By
Revised 3/25/94 By

10. Expansion Anchor Design. Per SDC 4.2, Rev. 0

$$V_{applied} := \frac{\sqrt{U_{11}^2 + U_{12}^2}}{4}$$

Factored shear force per corner of enclosure.(conservative)

$$V_{applied} = 0.77 \cdot kip$$

$$T_{applied} := \frac{U_{12} \cdot 5 \cdot ft}{11.5 \cdot ft} \cdot 0.5$$

Tension couple divided by 2 caused from overturning.

$$T_{applied} = 0.514 \cdot kip$$

Try 1/2" HILTI KWIK-BOLT II with min. embed of 2 1/4".

$T := 1.36 \cdot kip$ (Allowable)
$V := 1.47 \cdot kip$ (Allowable)

$$\frac{V_{applied}}{V} + \frac{T_{applied}}{T} \le 1.0$$

$$\frac{V_{applied}}{V} + \frac{T_{applied}}{T} = 0.902$$

ok

VJM 5/13/94

Final: Provide a minimum of 2-1/2" exp anchors on all (4) sides of each skid.

KAISER ENGINEERS HANFORD

Calc. No. W320-24-024
Revision 1
Page No. 9a of 9

DESIGN ANALYSIS

Client WHC
WO/Job No. ER6159/W-320
Subject AY-Farm Electrical Equipment Pad/Skid Modifications
Date 03-11-96 By RW Davidson
Checked By
Location 200E/ 241-AY
Revised By

AY -Farm Electrical Equipment Pad Mods:

a. Reinforcement details modified to add diagonal rebars at blockouts and clarify rebar configuration. (See ECN No. W-320-123)

b. Expansion anchoring requirements for skid increased and overall dimensions of pad increased by 6-inches in each direction to satisfy expansion anchor edge distances. (See ECN No. W-320-125)

The structural integrity of AY-farm Electrical Equipment Pad not affected by these changes. No further calculations required.

AY-Farm Electrical Equipment Skid Modifications:

Modifications to floor framing are needed to clear conduit stub-up's through equipment pad blockouts.(See ECN W-320-230)
Additionally the weight of the VSD has gone from 1300 lbs to 3000 lbs.
Assume 80% of the weight is contained in cabinets A & B. Cabinet C is separate for AY Farm.
Ref 9: (See Attach 2 for Original Design Justification Calc, Page 5)

Chk floor loading: Assume max equip load over 3 beams due to framing mods

M max = 3000*.8 * 2 * 6/8 * 12 = 43,200 in-lbs

fb = 43,200/ 3 * 1.02 = 14,118 psi > 12,667 <NG> using SF = 3, Fy= 38ksi

Try load distributed over 3.5 beams:

fb = 43,200/ 3.5 * 1.02 = 12,590 < 12,667 <OK>

Chk shear @ coped formed channel: Use max shear, conserv.

Cross-section, 14 ga = .0747 * 6 = .45 sq in

v = 3000 * .8 /3 * 6/8 = 600 lbs

fv = 600/.45 = 1333 psi OK

Notes:
1. Provide C6 x 8.2 cross braces @ coped formed channels, both sides.
2. Provide C6 x 8.2 beams/braces @ cut formed channels, both sides.
3. Provide 1/2" dia plug weld between perimeter top plate and formed channels (5 plcs)
4. Use min 1/8" fillet weld for beam/brace connections
5. Perform all work per Constr Spec W-320-C7, Section 05500.
6. See Attach 3 for required mods.
7. As a precaution, add a nameplate on bldg. to remove VSD cabinets before lifting skid/housing enclosure.

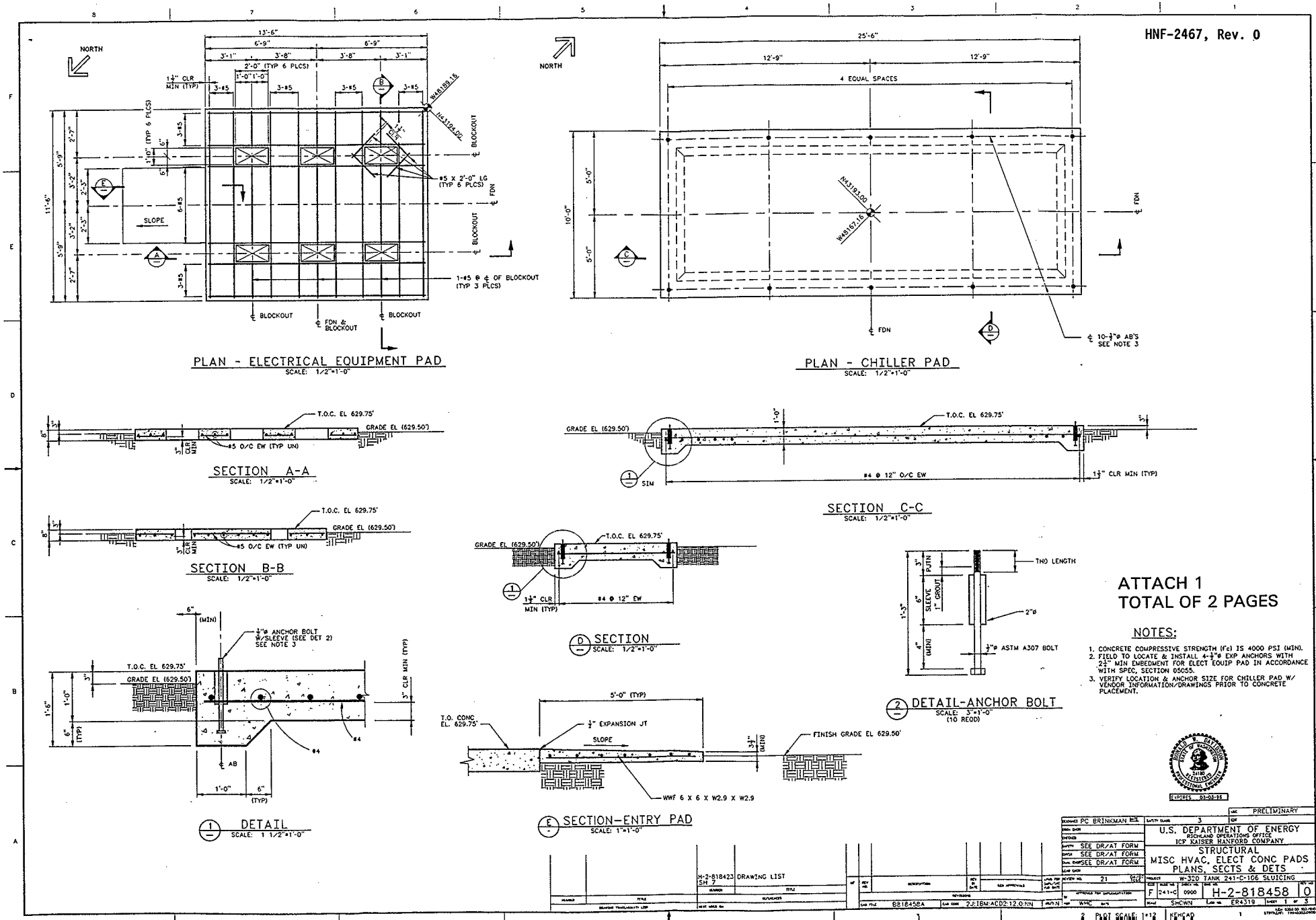
PLAN - ELECTRICAL EQUIPMENT PAD
SCALE: 1/2"=1'-0"
PLAN - CHILLER PAD
SCALE: 1/2"=1'-0"
SECTION A-A
SCALE: 1/2"=1'-0"
SECTION B-B
SCALE: 1/2"=1'-0"
SECTION C-C
SCALE: 1/2"=1'-0"
SECTION
SCALE: 1/2"=1'-0"
DETAIL
SCALE: 1 1/2"=1'-0"
DETAIL-ANCHOR BOLT
SCALE: 3"=1'-0"
(10 REQD)
SECTION-ENTRY PAD
SCALE: 1"=1'-0"
NORTH
4 EQUAL SPACES
T.O.C. EL 629.75'
GRADE EL (629.50')
#5 O/C EW (TYP UN)
#4 @ 12" O/C EW
1½" CLR MIN (TYP)
SLOPE
BLOCKOUT
FDN
FDN & BLOCKOUT
1-#5 @ ℄ OF BLOCKOUT (TYP 3 PLCS)
#5 X 2'-0" LG (TYP 6 PLCS)
W48189.16
N43194.00
N43193.00
W48167.16
10-½"ø AB'S SEE NOTE 3
½"ø ANCHOR BOLT W/SLEEVE (SEE DET 2) SEE NOTE 3
T.O. CONC EL. 629.75'
½" EXPANSION JT
FINISH GRADE EL 629.50'
WWF 6 X 6 X W2.9 X W2.9
THD LENGTH
½"ø ASTM A307 BOLT
2"ø
1" GROUT
SLEEVE
PJTN
ATTACH 1
TOTAL OF 2 PAGES
NOTES:
1. CONCRETE COMPRESSIVE STRENGTH (f'c) IS 4000 PSI (MIN).
2. FIELD TO LOCATE & INSTALL 4-½"ø EXP ANCHORS WITH 2¼" MIN EMBEDMENT FOR ELECT EQUIP PAD IN ACCORDANCE WITH SPEC, SECTION 05055.
3. VERIFY LOCATION & ANCHOR SIZE FOR CHILLER PAD W/ VENDOR INFORMATION/DRAWINGS PRIOR TO CONCRETE PLACEMENT.
EXPIRES 03-03-96
PRELIMINARY
PC BRINKMAN
SEE DR/AT FORM
SEE DR/AT FORM
SEE DR/AT FORM
U.S. DEPARTMENT OF ENERGY
RICHLAND OPERATIONS OFFICE
ICF KAISER HANFORD COMPANY
STRUCTURAL
MISC HVAC, ELECT CONC PADS
PLANS, SECTS & DETS
W-320 TANK 241-C-106 SLUICING
H-2-818458
SHCWN
ER4319
H-2-818423 DRAWING LIST
SH 7
818458A
2J:IBM:ACD2:12.0:NN

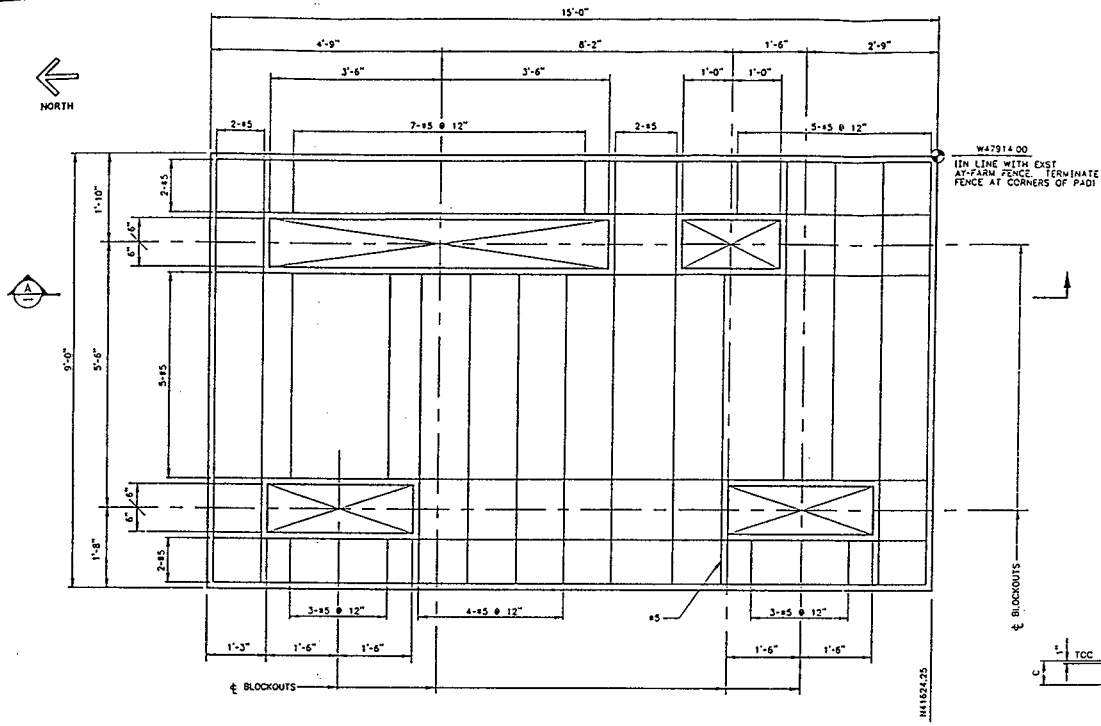

PLAN - ELECTRICAL EQUIPMENT PAD (FOR BLDG 241-AY-51)
SCALE: 1"=1'-0"

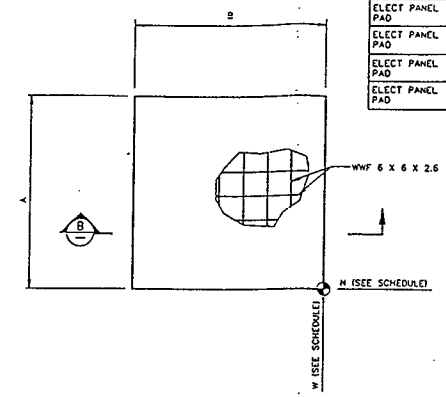

PLAN - TYPICAL EQUIPMENT PAD
SCALE: 1"=1'-0"

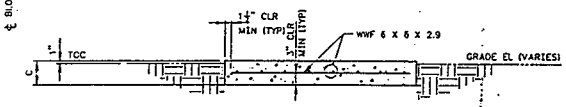

B SECTION
SCALE: 1" = 1'-0"

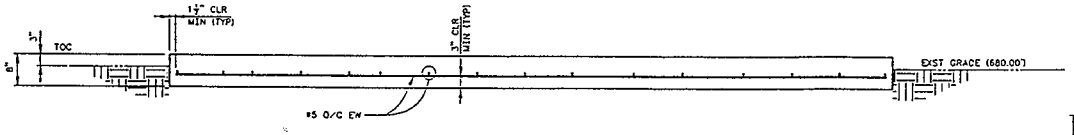

A SECTION
SCALE: 1" = 1'-0"

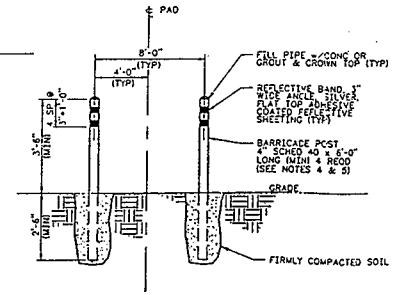

BARRICADE POST DETAIL
SCALE: NTS
(CATHODIC PROTECTION PAD ONLY)

MISC. PAD SCHEDULE

PAD TITLE	COORDINATES NORTH	COORDINATES WEST	ORIENTATION	DIMENSIONS A	DIMENSIONS B	DIMENSIONS C
RECTIFIER PAD	42291.00	47975.00	↑	4'-0"	4'-0"	5"
PIT COOLING CHILLER PAD	41620.50	47868.54	↑	6'-0"	4'-0"	5"
ELECT PANEL PAD	41623.25	47927.00	↑	3'-0"	3'-0"	8"
ELECT PANEL PAD	41630.50	47854.50	↑	3'-0"	3'-0"	8"
ELECT PANEL PAD	41630.50	47858.00	↑	3'-0"	3'-0"	8"
ELECT PANEL PAD	41626.50	47864.50	↑	3'-0"	3'-0"	8"

HNF-2467, Rev. 0

4

W-320
PLE-1

NOTES:

1. CONCRETE COMPRESSIVE STRENGTH (f'c) IS 4000 psi (MIN).
2. FIELD TO LOCATE & INSTALL A MIN OF 4-½"Ø EXP ANCHORS WITH 2¾"-MIN EMBED FOR ALL EQUIP/SKID ATTACHMENTS TO PADS. INSTALL IN ACCORDANCE WITH SPEC. SECTION 05055.
3. APPLY CONCRETE SEALER/HARDENER TO TOP SURFACE OF CONCRETE PADS IN ACCORDANCE WITH SPEC. SECTION 09900.
4. PRIOR TO PAINTING BARRICADE POST, PIPE SHALL BE THOROUGHLY WIRE BRUSHED TO REMOVE ALL DIRT, RUST AND OTHER FOREIGN MAT'L. OIL, GREASE, AND SIMILAR SUBSTANCES SHALL BE REMOVED WITH SOLVENTS PRIOR TO WIRE BRUSHING.
5. PAINT ENTIRE LENGTH OF EACH BARRICADE POST WITH PRIMER AND ABOVE GRADE PORTION WITH 2 COATS OF YELLOW ENAMEL. COLOR IN ACCORDANCE WITH ANSI Z535.1:

   PRIMER - FS TT-P-645, NATIONAL LEAD #200-41.

   PAINT - FS TT-E-489, CLASS A, COMPOSITION G.

EXPIRES 02-02-96

PC BRINKMAN	CONSTRUCTION
SEE DR/AT FORM	U.S. DEPARTMENT OF ENERGY RICHLAND OPERATIONS OFFICE ICF KAISER HANFORD COMPANY
SEE DR/AT FORM	STRUCTURAL
SEE DR/AT FORM	MISC ELEC CONCRETE PADS PLANS & SECTIONS
	W-320 TANK 241-C-106 SLUICING
	F 241-AY 0900 H-2-818461 0
	SCALE SHOWN ER4319

H-2-818423 DRAWING LIST SH 6

8818461A 28:IBM:AC02:12.0 NN

2 PLOT SCALE: 1=12 KEYCAD 1

AL SMITH P E
6341 50th Ave SW
Seattle, WA 98136
(206)937 8557

DESIGN JUSTIFICATION CALCULATIONS

REF: KAISER HANFORD SPEC W 320 P33 REV 1

INDEX

PAGE	CONTENTS
2	WIND LOADING, WIND OVERTURNING
3	WIND SHEAR STRESSES
4	ROOF STRUCTURAL STRESSES & DEFLECTION
5	FLOOR LOADING, STRESSES
6	SEISMIC LOADS
7	HEAT LOAD CHECK
8	WEIGHT CALCULATION

ATTACH 2
TOTAL OF 8 PAGES

CONCLUSIONS:

1. STRUCTURE WILL EXCEED THE SPEC REQUIREMENTS
2. HEAT PUMP SYSTEM WILL BE ADEQUATE

Total of 8 pages.

ALBERT SMITH
STATE OF WASHINGTON
25461
REGISTERED
PROFESSIONAL ENGINEER

10,13,95

EXPIRES 7/9/97

AL SMITH P E
6341 50th Ave SW
Seattle, WA 98136
(206)937 8557

WIND LOADING. (UBC method)

By examination worst case is full face exposure to 70 mph wind.

$$P(\text{pressure psf}) = C_e C_q q_s I$$

$C_e = 1.06$ (0-15 ft high)
$C_q = .8$ worst case
Stag. pressure $q_s = 12.6$ psf @ 70 mph
$I = 1.07$ constant

Then $P = 11.4$ psf.

Exposed area $= 10.5 \times 14$
$= 147$ ft^2.

Total wind load $= 147 \times 11.4$
$= 1675$ lbs.

WIND OVERTURNING.

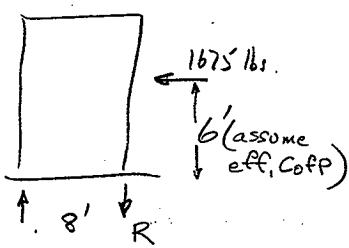

$R_{\text{front 2 corners}} = \frac{1675 \times 6}{2 \times 8}$

$R = 628$

$\therefore R < \frac{wt}{4}$ (wt = 4000 lbs)

will not lift

Al

AL SMITH P E
6341 50th Ave SW
Seattle, WA 98136
(206)937 8557

WIND SHEAR.

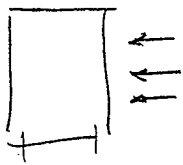

1675 lbs.

4 tie-down $\frac{1}{2}$" bolts.

$$f_s = \frac{1675}{4 \times \pi .25^2}$$

$$= 2132 \text{ psi}$$ — OK

AH.

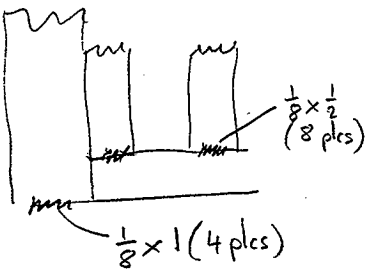

Total weld in shear $\simeq$ 2 inch^2

$$f_s = 837 \text{ psi}$$ — OK

AH.

AL SMITH P E
6341 50th Ave SW
Seattle, WA 98136
(206)937 8557

ROOF STRUCTURE

8x14 Area.

LOADING. $50\ lb/ft^2 + 20\ lb/ft^2 + 10\ lb/ft^2$
live snow aux.
$= 80\ lb/ft^2$.

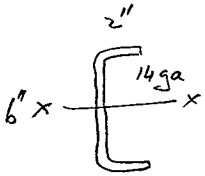

JOIST
$S = 1.07\ in^3$
Material: A569 OR BETTER
$f_y = 38{,}000\ psi$.

If S.F. ≥ 3.
$f_{allowable} = 12000\ psi$.

Max. B.M. $= f_{al} \times S$
$= 12840\ lb\ in$.

If span $= 8'$ B.M. $= 80\ lb/ft^2 \times \frac{4}{3} \times \frac{8^2}{8} \times 12$ (16" o.c)
$= 10{,}240\ lb.in.$ — OK ($10{,}240 < 12{,}840$.)

Deflection.

$$y_{max} = \frac{5wl^3}{384\ EI}$$

$E - 29\ 10^6$
$I \simeq 1.07 \times 3$
$W = wl$.

$$= \frac{5 \times 80 \times \frac{4}{3} \times 8^4 \times 12^3}{384 \times 3 \times 29 \times 10^6 \times 1.07 \times 3}$$

$= .1056\ in.$

$= \frac{1}{900} \times$ span. — OK

($y_{max} < \frac{1}{180}$)

AL SMITH P E
6341 50th Ave SW
Seattle, WA 98136
(206)937 8557

FLOOR LOADING.

Worst case — sling into position.

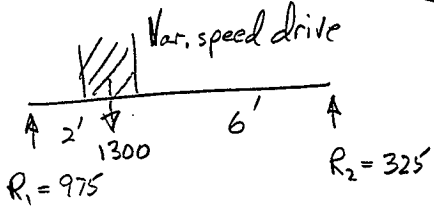

Max BM $= 975 \times 2 \times 12$
$= 23\,400$ lb. ins.

Carried on 4 joists.

Section in bending

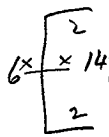

$S_x = 1.02 \text{ in}^3$

$f_b = \dfrac{23\,400}{4 \times 1.02}$

$= 5735$ psi. — OK

Al.

lengthwise channel.

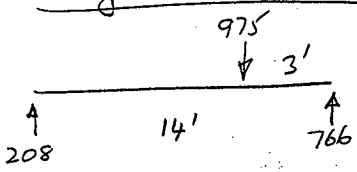

$BM_{(max)} = 27576$ lb. ins.

$S_x = 4.38 \text{ in}^3$ (C6×8.2)

$f_b = 6295$ psi. — OK

Al.

AL SMITH P E
6341 50th Ave SW
Seattle, WA 98136
(206)937 8557

SEISMIC LOADING. (SEA (California) 1988)

STATIC LATERAL EQUIV FORCE PROCEDURE

LATERAL SHEAR $V = \frac{ZIC}{R_W} W$

Z = zone factor .2
I = str. importance 1.
C = 2.75 max value
W = dead load ≈ 4500 lb
R_W = construction factor use 6 (light-stl)

Then V lbs $= \frac{.2 \times 1 \times 2.75 \times 4500}{6}$

$= 410$ lbs.

negligible AL.

Seismic Shear < Wind Shear

∴ no structural problem.

CUSTOMER MUST EXAMINE CAPABILITY OF CABINET FASTENERS – NOT LIKELY TO BE A PROBLEM.

AL.

AL SMITH P E
6341 50th Ave SW
Seattle, WA 98136
(206)937 8557

Heat Load.

Check of Customer Spec

$U = \frac{1}{R}$ BTU/ft²/°F/hr.

Total Area $\simeq (8+14+16)\times 10 + 8\times 14$
$\cong 500\,ft^2$ insulated wall.

Therefore. $U = \frac{500}{19}$ + loss thru door + loss thru studs + joists.

$$U_{S+J} = \underbrace{\frac{.12}{6}\times 26}_{\text{Coeff } U} \times \underbrace{\frac{.075}{12}(25\times 10 + 24\times 8)}_{\text{Area of steel webs.}} \quad \text{(no wind)}$$

$= 1.44$ BTU/hr/°F

$\Sigma U = 27.8$ + door loss BTU/hr/°F

Heating

load $= (50-2)\times(27.8 + U_{dl})$
$= 1332$ BTU/hr + door losses + wind.
(8,000 available)

Cooling

load $= (101-85)(27.8 + U_{dl})$
$= 444$ + BTU/hr. (16,000 available)

→ Performance margin looks OK AL.

AL SMITH P E
6341 50th Ave SW
Seattle, WA 98136
(206)937 8557

WEIGHT CALCULATION.

use bill of material - see dwg S1001. sht 1.

F/N		
1	channel	230 lbs.
2-4	channels.	1370
5	girts.	60
6	floor	974
7	tie-downs	10
11	heat pump	300
15	roofing.	120
16	wall kit	300
22	liner	375
17	door	150 est.
	misc	150 (grounding pads, wiring, paint, etc)
		4039 lbs. bare.

AL

ICF KAISER HANFORD			ENGINEERING CHANGE NOTICE SKETCH			
Ref Dwg	Sh	Rev	Prepared By	Checked By	ECN No	Page
H-2-818695	5	1	DA MORASCH	RW DAVIDSON	W320-230	3/

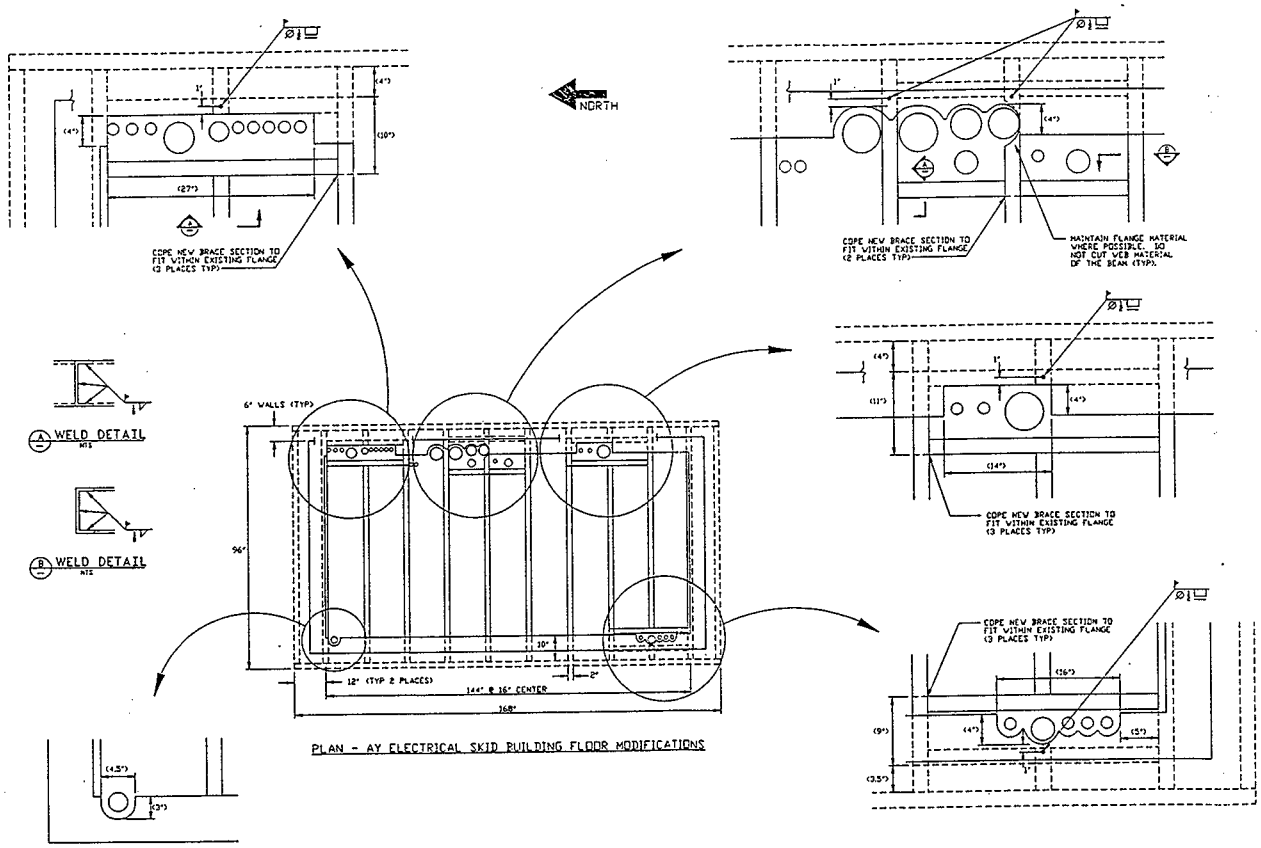

NOTES:

1. DIMENSIONS IN PARENTHESIS DENOTE REFERENCE ONLY.
2. MODIFY 18" x 28" FLOOR PANELS AS REQUIRED TO FIT AROUND CONDUIT PROTRUSIONS.
3. USE C6 x 8.2 CHANNEL FOR NEW BRACING MATERIAL.
4. ALL ELECTRICAL EQUIPMENT SKID FLOOR MODIFICATIONS SHALL BE IN ACCORDANCE WITH SPEC SECTION 05500.

ATTACH 3
PAGE 1 OF 1

CAD FILE: W320-230 PLOT SCALE: 1=1

800181-43

FLOOR MOUNTED CONTROL UNIT - 2FD86-R (VGI) + 1FD86R

ATTACH 4
PAGE 1 OF 1

CAUTION - LIFTING INSTRUCTIONS
FOR EYEBOLT PICKUP: SLING IN A MANNER THAT WILL EQUALIZE LOAD AT ALL PICKUP POINTS. USE SPREADER BARS WHEN REQ'D. MINIMUM ANGLE OF SLING TO BE 45°. DO NOT JOLT WHEN LIFTING.

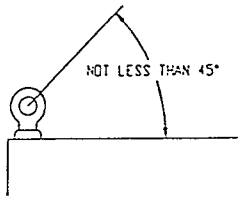

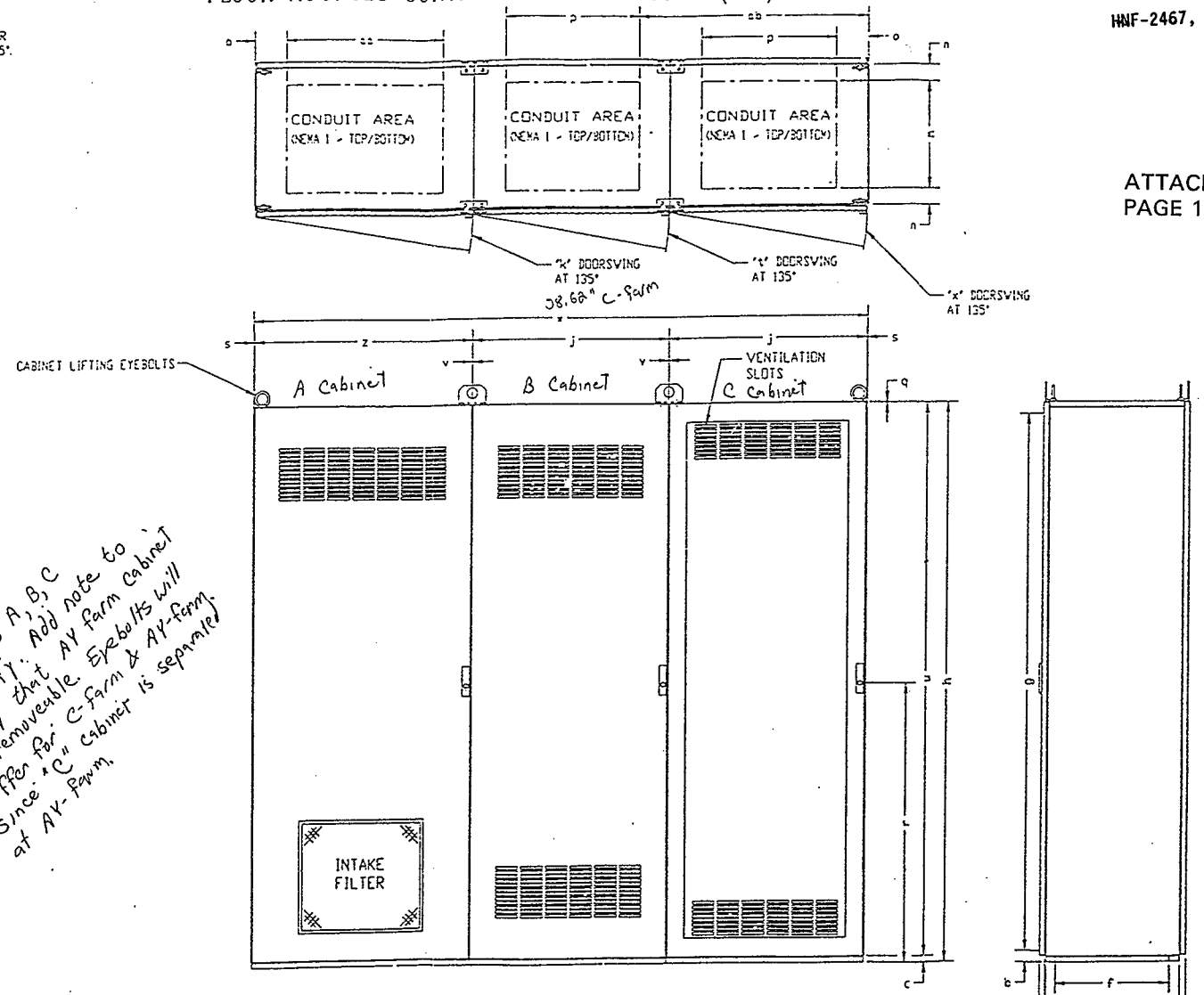

Please label cabinets as A, B, C to clarify. Add note to clarify that AY farm cabinet is removeable. Eyebolts will differ for C-farm & AY-farm since "C" cabinet is separated at AY-farm.

THESE DIMENSIONS SUBJECT TO CHANGE UNLESS CERTIFIED.

DIMENSIONS

	a	b	c	d	e	f	g	h	i	j	k	m	n	o	p	q	r	s	t	u	v	w	x	y	z
INCHES	23.70	1.76	1.00	0.78	21.62	18.46	83.14	86.76		31.46	35.12	16.62	2.50	5.12	21.46	0.12	43.22	0.12	31.18	85.62	0.04	98.62	31.18		35.40
MM	602.00	45.00	25.50	20.00	549.00	469.00	2112.00	2203.50		799.00	892.00	422.00	63.50	130.00	545.00	3.00	1098.00	3.00	792.00	2175.00	1.00	2505.00	792.00		899.00
	aa	ah																						WEIGHT	
INCHES	25.40	36.62																						LBS.	3,000.00
MM	645.00	930.00																						KG.	1,360.80

DIMENSIONS ARE IN ENGLISH - INCHES / METRIC - (MILLIMETERS)
INCHES x 25.4 = MILLIMETERS
APPROX. WEIGHT IN ENGLISH - POUNDS / METRIC - (KILOGRAMS)
POUNDS x .453 = KILOGRAMS

RELIANCE ELECTRIC INDUSTRIAL Co. ATHENS PLANT ATHENS, GEORGIA 30613

/AC 800181-43

11-541-21

DISTRIBUTION SHEET

To	From	Page 1 of 1
Distribution	JW Bailey	Date 19 July 1998
Project Title/Work Order		EDT No. 622225
Project W-320 Tank 106-C, HNF-2467, Civil/Structural Calculations, Vol. 7		ECN No. n/a

Name	MSIN	Text With All Attach.	Text Only	Attach./ Appendix Only	EDT/ECN Only
JW Bailey	S2-48				
W-320 Project Files	R1-29				