JUL 2 4 1998
Sta. 4 58

ENGINEERING DATA TRANSMITTAL

Page 1 of 1

1. EDT 622224

2. To: (Receiving Organization) Distribution	3. From: (Originating Organization) TWRS Projects/SST Retrieval	4. Related EDT No.: n/a
5. Proj./Prog./Dept./Div.: D2991 W-320 TWRS/TCPN # ~~D2MA1~~	6. Design Authority/ Design Agent/Cog. Engr.: JW Bailey, NHC	7. Purchase Order No.: n/a
8. Originator Remarks: For approval and release of a new supporting document. This document has been generated to ensure retrievability of the Project W-320 "Civil/Structural Calculations, Vol. 6".		9. Equip./Component No.: n/a
		10. System/Bldg./Facility: 241-C-106
11. Receiver Remarks: 11A. Design Baseline Document? [X] Yes [] No		12. Major Assm. Dwg. No.: n/a
		13. Permit/Permit Application No.: n/a
		14. Required Response Date:

15. DATA TRANSMITTED

(A) Item No.	(B) Document/Drawing No.	(C) Sheet No.	(D) Rev. No.	(E) Title or Description of Data Transmitted	(F) Approval Designator	(G) Reason for Transmittal	(H) Originator Disposition	(I) Receiver Disposition
1	HNF-2466	-	0	Project W-320, 241-C-106 Sluicing, Civil/Structural Calculations, Vol. 6	NA			-

16. KEY

Approval Designator (F)	Reason for Transmittal (G)		Disposition (H) & (I)	
E, S, Q, D or N/A (see WHC-CM-3-5, Sec.12.7)	1. Approval 2. Release 3. Information	4. Review 5. Post-Review 6. Dist. (Receipt Acknow. Required)	1. Approved 2. Approved w/comment 3. Disapproved w/comment	4. Reviewed no/comment 5. Reviewed w/comment 6. Receipt acknowledged

17. SIGNATURE/DISTRIBUTION
(See Approval Designator for required signatures)

(G) Reason	(H) Disp.	(J) Name	(K) Signature	(L) Date	(M) MSIN	(G) Reason	(H) Disp.	(J) Name	(K) Signature	(L) Date	(M) MSIN
2	1	Design Authority	JW Bailey	7/20/98	S2-48						
		Design Agent	MC Davenport	7/19/98							
2	1	Cog.Eng.	~~CE Graves~~		S2-48						
2	1	Cog. Mgr	JW Bailey	7/20/98	S2-48						
		QA									
		Safety									
		Env.									

18. MC Davenport ~~C.E. Graves~~ ~~3/24/98~~ 7/19/98 Signature of EDT Originator Date	19. Authorized Representative for Receiving Organization Date	20. J.W. Bailey ~~3/24/98~~ 7/20/98 Design Authority/ Cognizant Manager Date	21. DOE APPROVAL (if required) Ctrl. No. ☐ Approved ☐ Approved w/comments ☐ Disapproved w/comments

BD-7400-172-2 (05/96) GEF097

BD-7400-172-1

Project W-320, 241-C-106 Sluicing Civil/Structural Calculations, Vol. 6

John W. Bailey
Numatec Hanford Co., Richland, WA 99352
U.S. Department of Energy Contract DE-AC09-96RL13200

EDT/ECN: 622224 UC: 506
Org Code: 8C452 Charge Code: D2991/HANA0600
B&R Code: EW3130010 Total Pages: 267

Key Words: W-320, Sluicing, Tank 241-C-106, Tank 241-AY-102, WRSS, calculations, civil/structural.

Abstract: This supporting document has been prepared to make the FDNW calculations for Project W-320, readily retrievable.

TRADEMARK DISCLAIMER. Reference herein to any specific commercial product, process, or service by trade name, trademark, manufacturer, or otherwise, does not necessarily constitute or imply its endorsement, recommendation, or favoring by the United States Government or any agency thereof or its contractors or subcontractors.

Printed in the United States of America. To obtain copies of this document, contact: Document Control Services, P.O. Box 950, Mailstop H6-08, Richland WA 99352, Phone (509) 372-2420; Fax (509) 376-4989.

Kara J Broz 7/24/98
Release Approval Date

DATE HANFORD RELEASE ID: 58
STA: 4
JUL 24 1998
Release Stamp

Approved for Public Release

Project W-320, 241-C-106 Sluicing Civil/Structural Calculations, Vol. 6

TABLE OF CONTENTS

Calc. No.	Title	Page
W320-24-015	241-C-106, Dome Load Summary Report	A-i
W320-24-016	Sluice Pit AY-02E Analysis	B-i
W320-24-017	Pump Pit AY-02A Analysis and Cover Block Design	C-i
W320-24-018	241-AY-102, Dome Load Summary Report	D-i

W320-24-015

241-C-106, Dome Load Summary Report

KAISER ENGINEERS HANFORD	CALCULATION IDENTIFICATION AND INDEX	Page i of iii Date 6-1-94

This sheet shows the status and description of the attached Design Analysis sheets.

Discipline Structural WO/Job No. ER4319/W-320 Calculation No. W320-24-015

Project No. & Name Project W-320, Tank 241-C-106 Sluicing

Calculation Item 241-C-106, Dome Load Summary Report

These calculations apply to:

Dwg. No. N/A Rev. No.

Dwg. No. N/A Rev. No.

Other (Study, CDR) N/A Rev. No.

The status of these calculations is:

[] Preliminary Calculations

[X] Final Calculations

[] Check Calculations (On Calculation Dated)

[] Void Calculation (Reason Voided)

Incorporated in Final Drawings? [] Yes [X] No

This calculation verified by independent "check" calculations? [] Yes [X] No

Original and Revised Calculation Approvals:

	Rev. 0 Signature/Date	Rev. 1 Signature/Date	Rev. 2 Signature/Date
Originator	James R. Booth/6-1-94	6/25/96	
Checked by	7/25/95	6/25/96	
Approved by	7/28/95	6/25/96	
Checked Against Approved Vendor Data		N/A	

WJM 1 6/25/96

REV 1: REVISED PAGES 2 THRU 5 & 9 THRU 11.

INDEX

Design Analysis Page No.	Description
1-2	Objective, Criteria, Data, Assumptions, Method, References, and Conclusion.
3-10	Dome Load Summary Calculations
11	Dome Load Table
Attach. 1	Calculation No. ER4086-C001

KEH 0378.00 (06/92) KEF072

CALCULATION CROSS INDEX (Typical)

Subject Calculation No. W320-24-015

Page ii of iii

Subject Calculation Revision No.	Superceded by Calculation No.	These interfacing calculation/documents provide input to the subject calculation, and if revised may require revision of the subject calculation.		Results and conclusions of the subject calculation are used in these interfacing calculations and/or documents.		Does the output interface calculation/ documents require revision?		Has the output interface calculation/ documents been revised?		Discipline manager's signature and date indicating evaluation complete.
		Calculation/Document No.	Revision No.	Calculation/Document No.	Revision No.	Yes	No	Yes	No	
0		ER4086-C001	0	N/A			✓		✓	[illegible] 7/28/99

DESIGN VERIFICATION SCREENING CRITERIA

Project/Document No. W-320 / W320-24-015

When the design or design change affects hardware, formal design verification must be performed if one or more of the following questions must be answered affirmatively (YES).

YES	NO	
	✓	1. Does the design or design change involved meet the established criteria to be considered Safety Class 1 or 2?
	✓	2. Does this design or design change cause or permit changes to Safety Class 1 or 2 instrument or alarm setpoints outside of previously approved operational limits?
	✓	3. Does this design or design change significantly affect the nuclear safety consequences of a malfunction or failure of the structure, system, or component?
	✓	4. Does this design or design change involve or change design that has previously undergone formal design verification?

Assigned Lead Engineer — Date: 7/28/95

Responsible Discipline Manager — Date: 7/28/95

Original Design Package Distribution:

- Project Manager
- Design Verification Officer
- Engineering Document Control

Design Change Distribution:

- Attach to Engineering Change Notice

KEH-1981.00 (06/91)

DESIGN ANALYSIS

Client WHC
Subject 241-C-106, Dome Load Summary Report
Location Tank 241-C-106, C-Farm, 200E

WO/Job No. ER4319/W-320
Date 6-1-94 By J.R. Booth JRB
Checked 7/25/95 By
Revised By

OBJECTIVE:

The purpose of this calculation is to conservatively estimate the weight of equipment and structures being added over Tank 241-C-106 as a result of Project W-320 and combine these weights with the estimated weights of existing structures and equipment as calculated in Attachment 1 (Calc. No. ER4086-C001). The combined weights will be compared to the allowable live load limit set in the OSD of 200,000 lbf to provide a preliminary assesment of loading conditions above Tank 241-C-106. This calculation is not intended as a structural analysis or evaluation of the tank dome.

CRITERIA:

1. Functional Design Criteria for Tank 241-C-106 Waste Retrieval, Project W-320; Document No. WHC-SD-W320-FDC-001, Rev. 2.
2. Operating Specification for Single-Shell Tanks; Document No. OSD-T-151-00013, Rev. D-1.

GIVEN DATA:

1. Weight of existing Pits over Tank C-106 per Calc. No. ER-4086-C001.
2. Design input from calculations prepared by the W-320 staff and summarized on the spreadsheet.
3. Surface elevation = 645.00'.

ASSUMPTIONS:

1. Soil Weight = 120 pcf.
2. Concrete Weight = 150 pcf.
3. Only loads on or within a 20' perimeter around the tank C-106 will be included to act on the dome.

METHOD USED:

Hand Calculation

REFERENCES:

1. American Institute of Steel Construction, Load and Resistance Factor Design (LRFD), First Edition.
2. Calc. No. ER4086-C001, Net Weight Determination Above Tank Dome, Project W-320.
3. Report, "Tank 241-C-106 Sluicing Dome Loads and Civil Utility Interface Tanks 241-C-106 and 241-AY-102". Prepared by Kaiser Engineers Hanford (ICF KH), Document No. W302-LR-TD-291, September 1993.
4. Tank 241-SY-101 Dome Loading Control Document. Doc. No. WHC-SD-WM-TA-141.
5. Calc. No. W320-24-014, Process Building and Equipment Skid Foundation.

DESIGN ANALYSIS

Client WHC
Subject 241-C-106, Dome Load Summary Report
Location Tank 241-C-106, C-Farm, 200E

WO/Job No. ER4319/W-320
Date 6-1-94 By J.R. Booth JRB
Checked 7/25/95 By
Revised 6/14/96 By

CONCLUSION:

The total cummulative net live load on the dome of C-106 tank based on existing systems/structures, sluicing project systems/structures and maximum expected construction surcharge is not expected to exceed approx 92% of the existing program/administrative controls for dome loading which is currently set at 100 tons maximum concentrated over a 10-ft radius. The live loads imposed on C-106 are not concentrated within a 10-ft radius on the surface, but are distributed over a 57.5 -ft radius, thus the uniform live load as a result of approching 92% of the live load limit is considerably less than the program/administrative limit of approx. 0.32 ton/sq ft. The maximum concentrated live load on the dome is expected from the Process building which yields a uniform live load effect in the range of 0.1 tons/sq ft, which is approx 1/3 of the limit.

wjh 6/2

DESIGN ANALYSIS

Client WHC
Subject 241-C-106, Dome Load Summary Report
Location Tank 241-C-106, C-Farm, 200E

WO/Job No. ER4319/W-320
Date 6-1-94 By J. R. Booth JRB
Checked 7/25/95 By
Revised 6/14/96 By

Weight of Sluicing Pit, Covers, and Equipment

1. Sluicing Pit:
   146298+397+83-144210=2568 lbs (Attach. 1, pg. A-6)

2. **New Cover Blocks: An average of 7-1/2" additional thickness of concrete is required. To account for higher ratio of steel embedments a 10% weight increase factor is used.**
   [(12 ft)(12.5)(.625)](150 pcf)(1.10) = 15469 lbs (H-2-818450, SH 2)

   WJh 6/2

3. Approximate weight of Jumper Assemblys:
   C-06C-6-A = 325 lbs (H-2-818515)
   C-06C-8-B = 185 lbs (H-2-818516)
   C-06C-7-(DRAIN)=120 lbs (H-2-818513)
   Total = 325+185+120 = 630 lbs

   WJh 6/25/

4. Weight of Sluicer Assembly and Drive Assembly:
   Sluicer Drive Assembly = 1600 lbs (H-2-818550, SH-5)
   Sluicer Assembly = 1700 lbs (H-2-818551, SH-1)
   Total=1600+1700=3300 lbs

5. **Plug Weight Adjustments:** H-2-818450 SH3

   Slot,approx = [1.83*.67*.5]cu ft*150 lb/cu ft = -92 lbs
   Slot Plug = 460 lbs
   Total = [460] lb - [92] lb = 368 lbs

   WJh 6/25

6. **Total for Sluice Pit:**
   2568+15469+630+3300+368 = 22335 lbs

DESIGN ANALYSIS

Client WHC
Subject 241-C-106, Dome Load Summary Report
Location Tank 241-C-106, C-Farm, 200E

WO/Job No. ER4319/W-320
Date 6-1-94 By J.R. Booth JRB
Checked 7/25/95 By Ru Donalson
Revised 6/14/96 By Ru Donalson

Weight of Pump Pit, Covers, and Equipment

1. Pump Pit:
   235455+769+397+86-269870= -33163 lbs (Attach. 1, pg. A-8)

2. New Cover Blocks: An average of 7-1/2" additional thickness of concrete is required. To account for higher ratio of steel embedments a 10% weight increase factor is used.
   [(16 ft)(18.5)(.625)](150 pcf)(1.10) = 30525 lbs (H-2-818448, SH 2)

3. Approximate weight of Jumper Assemblies in pit:
   06A-A-9 = 675 lbs (H-2-818505, SH-1)
   C-06A-8 -(DRAIN) = 122 lbs (H-2-818512)
   Total: 675 + 122 = 797 lbs

4. Equipment:
   Booster Pump: 1000 lbs(pump) +2250 lbs(motor)+500 lbs(misc) = 3750 lbs (H-2-818508, SH1)
   Winch/Imersible Pump: 5480 lbs (H-2-818495)
   Total: 3750 + 5480 = 9230 lbs

5. Plug /Penetration Weight Adjustments: H-2-818448 SH 2
   Pump Penetration,approx = $\pi/4[3.7^2 avg*1.0 + 2.875^2*1.56]$cu ft*150lb/cu ft
   = -3132 lbs
   Slots,approx = [2.75*.67*.67 + 2.33*.67*.5]cu ft*150 lb/cu ft = -302 lbs

   Riser slot,approx = [1.75*2.125*.58]cu ft*150 lb/cu ft = -324 lbs
   Slot Plugs = [653 + 590] lb = 1243 lbs
   Pump Penetration Plug = 7000 lbs
   Total = [7000 + 1243] lb - [3132 + 302 +324] lb = 4485 lbs

6. Toal for Pump Pit:

   -33163+30525+797+9230+4485 = 11874 lbs

JRM 6/25

DESIGN ANALYSIS

Client WHC
Subject 241-C-106, Dome Load Summary Report
Location Tank 241-C-106, C-Farm, 200E

WO/Job No. ER4319/W-320
Date 6-1-94 By J.R. Booth JRB
Checked 7/25/95 By
Revised 6/14/96 By

Weight of Heel Pit, Replacement Covers, and Equipment

1. Heel Pit: (W/O covers - displaced soil, Attachment 1, Pg A-7
   [12 x 9 x 6.11 - 9.75 x 6.75 x 2 - 9 x 6 x 2.25 - π/4(26/12)^2 x 1.86]150 pcf - [50026] = 9959 lbs

2. Replacement Covers, ERS
   H-2-820725, 5600 lbs + H-2-820729, 3750 lbs = 9350 lbs

3. Exst Equip:
   Heel Jet Pump, est 1000 lbs + riser, 238 lbs = 1238 lbs

Total = 9959 + 9350 + 1238 = 20547 lbs

RWJ 6/25/

Weight of Instrument Enclosure Foundation

1. Weight of Filled in Concrete Foundation - Displace Soil: (H-2-41918).
   a. [(7.33' x 3.33' x 3.17') 150 pcf = 11607 lbs
   b. (7.33' x 3.33' x 2.5') 120 pcf = 7323 lbs
   c. Total: 11607 - 7323 = 4284 lbs

Note: From observation of a photo dated June 1991, the Instrument Enclosure is no longer present and the Foundation has been filled. It is conservatively assumed to be filled with concrete.

DESIGN ANALYSIS

Client WHC
Subject 241-C-106, Dome Load Summary Report
Location Tank 241-C-106, C-Farm, 200E

WO/Job No. ER4319/W-320
Date 6-1-94 By J.R. Booth JRB
Checked 7/25/95 By Ken Donahoe
Revised By

Weight of Existing 16" Diameter Exhaust Duct and Footing

1. 16" Dia. Duct Spool: (H-2-93797, sh. 2)
   a. From half way between footing of Detail 4 to footing adjacent to Sluice Pit:
      ((27 + 7)/2) + 6 = 23 ft
      (23 ft)(62.6 lb/ft) = 1440 lbs

2. Weight of Pipe Support Footing: (H-2-93797, sh. 2 & H-2-93800)
   Detail F: Concrete pad next to Sluice Pit
      (7' x 7' x 4')150 pcf = 29400 lbs
      Displaced Soil: (7' x 7' x 2.5')120 pcf = 14700 lbs

3. Total
   29400 - 14700 + 1440 = 16140 lbs

DESIGN ANALYSIS

Client WHC
Subject 241-C-106, Dome Load Summary Report
Location Tank 241-C-106, C-Farm, 200E

WO/Job No. ER4319/W-320
Date 6-1-94 By J.R. Booth JRB
Checked 7/25/95 By Ken Donaldson
Revised By

Weight of Existing Hatchway (DWG File 73550)

1. Weight of Hatchway Concrete: Weight of concrete minus pit and trunk opening.
   [(7.75' x 5.25' x 13.69') + (0.5 x 4.25' x 1.73' x 7.25') + (0.5 x 7.25' x 2.94' x 4') + (3.02 x 7.25 x 4) - (3.25 x 5.75 x 10.75) - (π/4 x 2^2 x 6.5)]150 pcf = 73885 lbs.

2. Weight of Weather Cover: (H-2-41785) Insignificant.

3. Weight of displaced soil:
   [(7.75' x 5.25' x 13.69') + (0.5 x 4.25' x 1.73' x 7.25') + (0.5 x 7.25' x 2.94' x 4') + (3.02 x 7.25 x 4)] 120 pcf = 85665 lbs

4. Weight of adjacent Exhaust Foundation (H-2-41828)
   a. Concrete Weight: (4.625' x 2.542' x 4.5') 150 pcf = 7936 lbs
   b. Displaced Soil: (3.5' x 2.542 x 4.625) 120 pcf = 4938 lbs
   c. Exhaust stack has been removed, only the foundation remains.

5. Total
   73885 - 85665 + 7936 - 4938 = -8782 lbs

DESIGN ANALYSIS

Client WHC
Subject 241-C-106, Dome Load Summary Report
Location Tank 241-C-106, C-Farm, 200E

WO/Job No. ER4319/W-320
Date 6-1-94 By J.R. Booth JRB
Checked 7/25/95 By
Revised 6/14/96 By

Weight of Process Building

1. Weight of bldg (5000 lbs) + Skid(55,000 lbs) + Fdn(86,250 lbs) =146,250 lbs (Ref 5) | WJM 6/25/96

2. Weight of Displaced Soil:
   6" Curb: [2(0.5' x 0.83' x 15.0') + 2(0.5 x 0.83 x 23.3')]120pcf = 3815 lbs
   Slab: (1' x 15' x 25') 120pcf = 45000 lbs
   Foundation Wall: [2(2.5' x 1' x 15') + 2(2.5' x 1' x 23.33')] 120pcf = 22998 lbs
   Total: 3815 + 45000 + 22998 = 71,813 lbs

3. Total: 146,250 - 71,813 = 74,437 lbs | WJM 6/25/96

Note: Skid wt above is based on the as-built lifted weight as reflected in ECN W-320-351. An additional 1000 lbs is expected to be added (misc. equip) when skid is in place. Crane surcharge load envelopes this additional load not accounted for in summary table.

Weight of Miscellaneous Pads Over C-106

1. (H-2-818427 & H-2-818458, SH-3)
   a. **Instr TB Pad: 2(3' x 3' x 0.667)150 pcf = 1801 lbs**
      Displaced Soil: 2(3' x 3' x0.5)120 pcf = 1080 lbs
      Sub-Total = 1801 - 1080 =721 lbs
   b. Hydraulic Power Supply Pad: (4' x 4' x 0.42')150 pcf = 1008 lbs
      Displaced Soil: (4' x 4' x 0.25)120 pcf = 480 lbs
      Sub-Total: 1008 - 480 = 528 lbs
   c. Purgemeter Pad: (2' x 2' x 0.42')150 pcf = 252 lbs
      Displaced Soil: (2' x 2' x 0.25)120 pcf = 120 lbs
      Sub-Total: 252 - 120 = 132 lbs
   d. **CCTV Pad: (6.5' x 4' x 0.667)150 pcf = 2601 lbs**
      Displaced Soil: (6.5' x 4' x 0.5)120 pcf = 1560 lbs
      Sub-Total: 2601 - 1560 = 1041 lbs
   e. Intake Air Filter Pad: 9278 lbs (Calc. No. W320-24-020, pg. 6)
      Displaced Soil: (8.5' x 9' x 0.5)120 pcf = 4590 lbs
      Sub-Total: 9278 - 4590 = 4688 lbs
   f. **Power TB Pad: (4.5' x 3' x 0.667)150 pcf = 1351 lbs**
      Displaced Soil: (4.5' x 3' x 0.5)120 pcf = 810 lbs
      Sub-Total: 1351 - 810 = 541 lbs

   Net Pad Wt: 721+528+132+1041+4688+541 = 7651 lbs
   Misc Equip/Panel Wt: est 1000 lbs
   Total = 7651 + 1000 = 8651 lbs

WJM 6/25/96

DESIGN ANALYSIS

Client WHC
Subject 241-C-106, Dome Load Summary Report
Location Tank 241-C-106, C-Farm, 200E

WO/Job No. ER4319/W-320
Date 6-1-94 By J.R. Booth JRB
Checked 7/25/95 By
Revised 6/14/96 By

Weight of Transfer Lines

Determine weight of Transfer Lines over tank: (See dwg. H-2-818427, sh-1)

Length of Line to Sluice Pit = 76 ft

WT./ft of 4" steel line = 10.79 lb/ft

WT./ft of 6" encasement = 18.97 lb/ft

76 ft*(10.79 lb/ft + 18.97 lb/ft) = 2262 lb

Length of Line to Pump Pit = 62 ft

WT./ft of 4" steel line = 10.79 lb/ft

WT./ft of 6" encasement = 18.97 lb/ft

62 ft*(10.79 lb/ft + 18.97 lb/ft) = 1846 lb

Total = 2262 + 1846 = 4108 lb

Note: Weight of liquids in Transfer Lines not included since weight of displaced soil more than balances the difference.

Weight of Crane Load Surcharge: At 20 ft Boundary

A surcharge will be added to the dome load summary as recommended in Ref. 3. Instead of adding a 28 Ton crane load acting directly over the tank, a 150 Ton Linkbelt crane, with its inside track loading the tank dome at a 90 degree orientation, with the closet track to the tank centered on the 20 ft LCEA boundary around the tank will be added similar to Ref. 3, page 7.

Based on an expected maximum lifted load of 55,000 lbs for the Process Bldg skid, the surcharge load imposed on the dome using the same methodology in Ref 4 (Page A-11, A-17) would be approx 330,690/295,190 x 13,892 lbs = 15,563 lbs .

RJH
1
6/25/96

Transfer Line Berm Weight: Profile A, ECN W-320-217

Soil: approx (1.2 sq ft x 62')120 pcf = 8928 lbs
Stabilization: approx (3.75' x .25' x 62')100 pcf = 5,813 lbs

Total: 8928 + 5,813 = 14,741 lbs

DESIGN ANALYSIS

Client WHC
Subject 241-C-106, Dome Load Summary Report
Location Tank 241-C-106, C-Farm, 200E

WO/Job No. ER4319/W-320
Date 6-1-94 By J.R. Booth
Checked 7/25/95 By
Revised 6/14/96 By

TANK 241-C-106 DOME LOAD SUMMARY

	lbf
Weight of Sluicing Pit, Covers, and Equipment	
Weight of Sluice Pit - displaced soil (ref. calc. ER-4086-C001)	2568
Additional weight of New Concrete Cover Blocks (H-2-818450 sh2)	15469
Weight of Piping Arrangement in pit (H-2-818526 sh1)	630
Weight of New Sluicer Assembly and Drive Assembly (H-2-818549)	3300
Plug Weight Adjustments	368
Total for Sluice Pit	22335
Weight of Pump Pit, Covers, and Equipment	
Weight of Pump Pit - displced soil(ref. calc. ER-4086-C001)	-33163
Additional weight of New Concrete Cover Blocks (H-2-818448 sh2)	30525
Weight of Piping Arrangement in pit (H-2-818524 sh1)	797
Weight of Equipment:	9230
Plug/Penetration Weight Adjustments	4485
Total for Pump Pit	11874
Weight of Heel Pit and Equipment	
Weight of Heel Pit - displaced soil(ref. calc. ER-4086-C001)	9959
Replacement Covers (H-2-820725,H-2-820729)	9350
Exst. Equipment	1238
Total for Heel Pit	20547
Weight of Instrument Enclosure(H-2-42262)	4284
Weight of existing Concrete Pipe Trench (ref. calc. ER-4086-C001) (Displaced soil weight exceeds enclosure weight)	neglect
Weight of existing 16" Dia. Exhaust Dust, see pg. 7 of calc. (H-2-93797 sh2)	16140
Weight of existing Hatch Way & Exhaust Stack FDN (H-2-41828)	-8782
Weight of New Process Building (H-2-818451) (Including full wt. of Process Building Conservative)	74437
Miscellaneous Concrete Pads (H-2-818427)	8651
Weight of Transfer Lines	4108
Weight of Transfer Line Berm	14,741
Weight of Crane Surcharge Load	15563
Total Live Load on Tank Dome & Exclusion Area (lbs)	183,898

with 6/

KAISER ENGINEERS HANFORD	CALCULATION IDENTIFICATION AND INDEX	Page i of iii Date 8-12-93

is sheet shows the status and description of the attached Design Analysis sheets.

Discipline Civil WO/Job No. ER4086/W320 Calculation No. ER4086-C001

Project No. & Name W320 Tank 241-C-106 Sluicing

Calculation Item Net Weight Determination Above Tank Dome

These calculations apply to:

Dwg. No. _____ Rev. No. _____

Dwg. No. _____ Rev. No. _____

Other (Study, CDR) Phase III Advanced Engineering Study on Dome Loads/ Civil Utility Interface Rev. No. 0

Calc. No. W320-24-015
Attachment 1
Page A1 of A10

The status of these calculations is:

X Preliminary Calculations

☐ Final Calculations

☐ Check Calculations (On Calculation Dated _____)

☐ Void Calculation (Reason Voided _____)

ncorporated in Final Drawings? ☐ Yes X No

This calculation verified by independent "check" calculations? ☐ Yes X No

Original and Revised Calculation Approvals:

	Rev. 0 Signature/Date	Rev. 1 Signature/Date	Rev. 2 Signature/Date
Originator	[illegible] 8/12/93		
Checked by	James R Booth 8/25/93		
Approved by			
Checked Against Approved Vendor Data			

INDEX

Design Analysis Page No.	Description
1-2	Objective, Design Inputs
3-7	Calculations

CALCULATION CROSS INDEX (Typical)

Subject Calculation No. ER4086-C001

Subject Calculation Revision No.	Superceded by Calculation No.	These interfacing calculation/documents provide input to the subject calculation, and if revised may require revision of the subject calculation.		Results and conclusions of the subject calculation are used in these interfacing calculations and/or documents.		Does the output interface calculation/ documents require revision?		Has the output interface calculation/ documents been revised?		Discipline manager's signature and date indicating evaluation complete.
		Calculation/Document No.	Revision No.	Calculation/Document No.	Revision No.	Yes	No	Yes	No	
0		W320-24-001(ER3799)	R0	W320LR_	0		X		X	
0		W320-24-002(ER3799)	R0	W320LR_	0		X		X	

DESIGN VERIFICATION SCREENING CRITERIA

Project/Document No. W320/ER4086-C001

When the design or design change affects hardware, formal design verification must be performed if one or more of the following questions must be answered affirmatively (YES).

YES	NO	
	X	1. Does the design or design change involved meet the established criteria to be considered Safety Class 1 or 2?
	X	2. Does this design or design change cause or permit changes to Safety Class 1 or 2 instrument or alarm setpoints outside of previously approved operational limits?
	X	3. Does this design or design change significantly affect the nuclear safety consequences of a malfunction or failure of the structure, system, or component?
	X	4. Does this design or design change involve or change design that has previously undergone formal design verification?

Assigned Lead Engineer — Date: 8/12/93

Responsible Discipline Manager — Date

Original Design Package Distribution:

- Project Manager
- Design Verification Officer
- Engineering Document Control

Design Change Distribution:

- Attach to Engineering Change Notice

KEH-1981.00 (06/91)

DESIGN ANALYSIS

Client WHC
Subject NET WEIGHT DETERMINATION ABOVE TANK DOME
Location 241-C-106

WO/Job No. ER4086
Date 8-12-93 By RW DAVIDSON
Checked 8/25/93 By JR Booth
Revised By

OBJECTIVE:

To determine the net weight of existing/new equipment and structures located above and around the tank dome of 241-C-106.

DESIGN INPUTS:

Criteria:

- Functional Design Criteria " Tank 241-C-106 Waste Retrieval, Project W-320" Document No. WHC-SD-W320-FDC-001, Rev 0, June 1993.
- Operating Specification for Single-Shell Tanks Document No. OSD-T-151-00013, Rev D-1

Known Data:

- Preliminary Calculation for Concrete Cover Blocks & Anchors, Calc. No. W320-24-001(ER3799)
- Preliminary Calculation for Enclosure Footings, Calc No. W320-24-002. (ER3799)
- Surface Elevation 645'-0"
- Soil cover 5.67 ft

Assumptions:

- Soil weight 120 pcf
- Concrete weight 150 pcf
- Heavy equipment access and location of new pits/heavy shielded skids around perimete of tank will be limited to insure excessive surcharge loads are not transferred to tank dome and walls. (20-ft exclusion area to be used)
- New equipment loads are estimated.
- Liner plate thickness 1/2" (Conserv.), however, WHC has indicated that a pit coating will be used in place of liner plates

Method Used:

- Determine net load of existing pits, encasements and new structures, footings resulting from displaced soil above dome.

DESIGN ANALYSIS

'ient WHC
Subject NET WEIGHT DETERMINATION ABOVE TANK DOME
Location 241-C-106

WO/Job No. ER4086
Date 8-12-93
Checked 8/25/93
Revised

By RW DAVIDSON
By JR Booth
By

References:

1. Report, "Tank 241-C-106 Sluicing, Project W-320,"prepared by Kaiser Engineers Hanford, Document No. WHC-SD-WM-234, Rev 2, May 1993.

2. Engineering Study, "Single Tank Interim Cover Study,"prepared by Whestinghouse Hanford Company, Document No. WHC-SD-ES-165, Rev 0, Jan 1992.

3. Report, " Tank Farm Riser Usage & Pit Modifications, 241-C-106 & 241-AY-102," prepared by Kaiser Enginers Hanford, Document No. W320ER1, September 1993.

Uncertainties:

- Some of the equipment weights have been estimated. During definitive design a final load summary table will be prepared.

Conclusion:

Net dome loading for existing pits, enclosures, new structures, footings & equipment has been determined.

DESIGN ANALYSIS

Client WHC
Subject NET WEIGHT DETERMINATION ABOVE TANK DOME
Location 241-C-106

WO/Job No. ER4086
Date 8-12-93
Checked 8/25/93
Revised

By RW DAVIDSON
By JR Booth
By

SLUICING PIT WEIGHT DETERMINATION: REF H-2-41344, H-2-41369, H-2-41318

The sluicing pit floor, walls and cover slabs form a reinforced concrete structure 12 ft long, 11.5 ft wide and approximately 10.96 ft tall. There is a central cavity 9 ft long and 8.5 ft wide and approximately 7 ft tall.
There is a hole 12 inch in diameter and a hole 4 inch in diameter through the pit floor. Both holes extend from a average finish floor elevation of 638'-2 1/4" to a bottom excavation elevation of 636'-3 1/2"(1.9 ft). The finish grade elevation and bottom of tank elevation for C-106 are 2 ft lower than what dwgs show, thus the elevations have been adjusted accordingly.
The risers extend approximately 8'-0" below finish pit floor.
Concrete weighs 150 pcf. The weight of the pit structure is thus:

$$150[12*11.5*10.96 - 9*8.5*7 - \pi/4*1^2*1.9 - \pi/4*(4/12)^2*1.9] = 146,298 \text{ lbf.}$$

The weight of the displaced soil is:

Note: Fin Grade = 645 ft & Bot of Excav = 636'-3 1/2"

$$120[12*11.5*8.708] = 144,210 \text{ lbf.}$$

The weight of other pit equip. is:

Risers, 12 inch dia. = 8 ft*49.56 plf = 396.5 lbf.
4 inch dia. = 8 ft*10.29 plf = 82.3 lbf.

New sluicer, est 2000 lbf

New Liner Plate, est 1/2 inch thk w/ 1 ft space btwn pit walls all round

$$\text{Liner Plate Wt} = 20.4[7*7*2 + 6.5*7*2 + 7*6.5] = 4,784 \text{ lbf.}$$

Total Wt, est = 7263 lbf.

The Net Loading on the Tank is:

$$146,298 \text{ lbf} + 7263 \text{ lbf} - 144,210 \text{ lbf} = 9351 \text{ lbf}$$

Model the (sluicer + vault) effect as a soil pressure plus a concentrated load of 10,000 lbf.

KAISER ENGINEERS HANFORD

Calc. No. ER4086-C001
Revision 0
Page No. 4 of 7

DESIGN ANALYSIS

ient WHC
Subject NET WEIGHT DETERMINATION ABOVE TANK DOME
Location 241-C-106

WO/Job No. ER4086
Date 8-12-93
Checked 8/25/93
Revised

By RW DAVIDSON
By JR Booth
By

HEEL PIT WEIGHT DETERMINATION: REF H-2-41345, H-2-41368

The heel pit floor, walls and cover slabs form a reinforced concrete structure 12 ft long, 9 ft wide and approximately 6.11 ft tall. Project W-320 waste retrieval will modify height of pit cavity by adding an estimated 3 ft to wall height. The modified central cavity will be 9 ft long, 6 ft wide and 5.25 ft tall ← NA
There is a hole 26 inches in diameter through the pit floor. The hole extends from an average finish floor elevation of 643'-0" to a bottom excavation elevation of 641'-1 5/8". (1.86 ft) The finish grade elevation and bottom of tank elevation for C-106 are 2 ft lower than what dwgs show, thus the elevations have been adjusted accordingly.
The riser extends through the pit floor to top of tank dome, approximately 3.42 ft.
Concrete weighs 150 pcf.
The weight of the modified pit structure is:

$150[12*9*9.11 - 9*6*5.25 - \pi/4(26/12)^2*1.86] = 104{,}028$ lbf.

he weight of the displaced soil is:

Fin. Grade = 645'-0" & Bot. of Excavation = 641'-1 5/8"

$120[12*9*3.86] = 50{,}026$ lbf.

The weight of other pit equipment is:

Riser, 26 inch dia. 3.42 * 69.43 plf (1/4" plate) = 237.5 lbf.

New Heel Pump, est = 1000 lbf.

Liner Plate, est 1/2 inch thk w/ 1 ft separation around pit walls,

Plate wt. = $20.4[7*5.25*2 + 4*5.25*2 + 7*4] = 2927$ lbf.

Total,est = 237.5 + 1000 + 2927 = 4165 lbf.

The Net Loading on the Tank is:

104,028 lbf + 4165 lbf - 50,026 lbf = 58,167 lbf.

Model (Heel Pump + Vault) as a soil pressure plus a concentrated load of 58, 500 lbf.

DESIGN ANALYSIS

Client WHC
Subject NET WEIGHT DETERMINATION ABOVE TANK DOME
Location 241-C-106

WO/Job No. ER4086
Date 8-12-93 By RW DAVIDSON
Checked 8/25/93 By JR Booth
Revised By

PUMP PIT WEIGHT DETERMINATION: REF H-2-41343, H-2-41370, REFERENCE 3 - APPENDIX A

The pump pit floor, walls and cover slabs form a reinforced concrete structure 18 ft long, 14 ft wide and approximately 9.71 ft tall. The central cavity is 14.54 ft long and 11 ft wide and approximately 5.84 ft tall.
There is a hole 42 inch in diameter, 12 inch and 4 inch through the pit floor.
These holes extend from an average finish floor elevation of 638.156' to a bottom excavation elevation of 636'-3 1/2"(1.86 ft) The risers extend approximately 8 ft below the finished pit floor. The finish grade elevation and bottom of tank elevation for C-106 are 2 ft lower than what dwg show, thus the appropriate elevations have been adjusted accordingly.
The bracket extension on the north wall is 18 ft long, 0.583 ft wide and approx. 3 ft deep. The bracket extension on the south wall is 18 ft long, 0.92 ft wide and approx 3.17 ft deep.
The riser port cavity in the west wall is 12 inch diameter and 9.71 ft tall.
Concrete weighs 150 pcf. The weight of the pit structure is:

$$150[18*14*9.71 + 18*.583*3 + 18*.92*3.17 - 14.54*11*5.84 - \pi/4(42/12)^2*1.86 - \pi/4(1)^2*1.86 - \pi/4(4/12)^2*1.86 - \pi/4(1)^2*9.71] = 235{,}455 \text{ lbf.}$$

The weight of displaced soil is:

Fin. Grade = 645' & Bot. of Excav. = 636'-3 1/2"

$$120[18*14*8.71 + 1.5*18*2] = 269{,}870 \text{ lbf.}$$

The weight of other pit equip. is:

Risers, 42 inch dia. = 8 * 96.13 plf(1/4" plate) = 769 lbf. (36 in)
12 inch dia. = 8 * 49.56 plf = 397 lbf.
4 inch dia. = 8 * 10.79 plf = 86 lbf

New Sluicer, est 2000 lbf.

New Submersible Pump, est 7000 lbf.

Dipleg,est 500 lbf

New Liner, 20.4[12.54*5.84*2 + 9*5.84*2 + 12.54*9] = 7438 lbf

Total wt. = 18,190 lbf

Net Loading on Tank = 235,455 lbf + 18,190 lbf - 269,870 lbf = - 16,225 lbf

KAISER ENGINEERS HANFORD

Calc. No. ER4086-C001
Revision 0
Page No. 6 of 7

DESIGN ANALYSIS

Client WHC
Subject NET WEIGHT DETERMINATION ABOVE TANK DOME
Location 241-C-106

WO/Job No. ER4086
Date 8-12-93 By RW DAVIDSON
Checked 8/25/93 By JR Booth
Revised By

SHIELDING ENCLOSURE WEIGHT DETERMINATION: REF CALC W320-24-001 REV 1/W320-24-002 REV 0

The above grade enclosure at 241-C-106 is assumed to run from the east wall of pump pit 06A ,at perimeter of tank, to the new valve pit, which will be located on boundary of a 20 ft load exclusion zone around the perimeter of the tank. The weight of a 20 ft section of the enclosure will be used and applied as a concentrated load on the dome of the tank.

Similarily, the above grade enclosure at 241-AY-102 is assumed terminate at the perimeter of the tank near sluice pit 02B.
The enclosure is 15 ft long, 6.833 ft wide and 3.333 ft tall. The central cavity is 15 ft long, 2.5 ft wide and 1.167 ft tall. The footings are 8.5 ft long, 4.5 ft wide and 2.5 ft thk and are located at 15 ft intervals. Top of footings are assumed to be at grade.

The enclosure weight is:

150[15*6.833*3.333 -15*2.5*1.167] = 44,678 lbf. (15 ft length)

The footing weight is:

150[8.5*4.5*2.5] = 14,344 lbf. (each footing)

The weight of displaced soil is:

120[8.5*4.5*2.5] = 11,475 lbf. (for each footing)

Determine net weight on tank dome:

Use weight of a 15 ft enclosure section and 50% of adjoining section since two footings are located within a 20-ft length

The contributing load on dome is:

= 44,678*1.5 + 14,344*2 - 11,475*2 = 72,755 lbf

KAISER ENGINEERS
HANFORD

Calc. No. ER4086-C001
Revision 0
Page No. 7 of 7

DESIGN ANALYSIS

Client WHC
Subject NET WEIGHT DETERMINATION ABOVE TANK DOME
Location 241-C-106

WO/Job No. ER4086
Date 8-12-93
Checked 8/25/93
Revised

By RW DAVIDSON
By JR Booth
By

EXISTING PIPE ENCASEMENT WEIGHT DETERMINATION: REF H-2-41283, H-2-41286

Section 101-101:

The overall dimensions of encasement are 3.333 ft wide and 2.375 ft tall. The cavity is 2 ft wide and 1.0417 ft tall. The approximate length of encasement is 139.4 ft. ie [50.5 + 10.599 +19.08 +36 +23.22]. Displaced soil is based on a 3.333 ft width and a estimated submerged depth of 1.7083 ft. The finished grade elevation is 645 ft.

Enclosure Wt. = 150[(3.333 * 2.375) - (2 * 1.0417)] = 875 lb/ft length

Displaced Soil Wt. = 120[3.333 * 1.7083] = 683 lbf/ft length

Net Dome Load on Tank Dome = 139.4[875 - 683] = 26,765 lbf

Section 103-103:

The overall dimensions of the encasement are 5.167 ft wide and 2.375 ft tall. The cavity is 3.833 ft wide and 1.0417 ft tall. The approximate length of encasement is 4.71 ft. Displaced soil is based on a 5.167 ft width and a submerged depth of 1.7083 ft. Finished grade is 645 ft.

Enclosure Wt. = 150[5.167 * 2.375 - 3.833 * 1.0417] = 1242 lb/ft length

Displaced Soil Wt. = 120[5.167 * 1.7083] = 1059 lb/ft length

Net Dome Load on Tank Dome = 4.71[1242 - 1059] = 862 lbf

Section 104-104:

The overall dimensions of encasement are 8.5 ft wide and 2.7083 ft tall. The cavity is 7.167 ft wide and 1.0417 ft tall. The approximate length of encasement is 3.792 ft. Displaced soil is based on a 8.5 ft width and a estimated submerged depth of 1.875 ft. Finished grade elevation is 645 ft.

Enclosure Wt. = 150[8.5 * 2.7083 - 7.167 * 1.0417] = 2333 lb/ft length

Displaced soil Wt. = 120[8.5 * 1.875] = 1913 lb/ft length

Net Dome Load on Tank Dome = 3.792[2333 - 1913] = 1593 lbf

Total Load on Dome = [26,765 + 862 + 1593] = 29,220 lbf

W320-24-016

Sluice Pit AY-02E Analysis

ICF Kaiser Hanford Company

INTEROFFICE MEMORANDUM

TO C. B. Organ E6-01
Design Verification Officer

DATE August 14, 1995

FROM G. L. Hopkins G3-17

COPIES TO R. W. Davidson S3-07
M. A. Haq G3-17
M. S. Ruben E6-46
Eng Doc Control G3-11

JOB NO. ER4319

SUBJECT REVISION OF STRUCTURAL ANALYSIS OF SLUICING PIT AY-02E

REFERENCES
1. Design Calculation Numbers W320-24-016 and -017, Rev. 1.0
2. InterOffice Memo to C. B. Organ from G. L. Hopkins, "Structural Analysis of Sluicing Pit AY-02E," dated March 31, 1995.

This memo and attached form KEH 1980.00 (16/91) are to perform a design verification of revised subject calculations. This design verification is in accordance with "Design Review Method" as defined by ICF Kaiser Hanford Company (ICF KH) Procedure ES 7, Rev. 3, Section 6.2.

Responses to the questions of Section 6.2.1.4 of Procedure ES 7 are as follows:

1) Were the design inputs correctly selected?

   YES This conclusion is based on the review of the original calculations.

2) Were all necessary conditions considered in the design?

   YES

3) Are required assumptions adequately described? Are sources identified reasonable for the design?

   YES

4) Was appropriate design method used?

   YES

5) Where necessary, are the assumptions reverified when the design is complete?

   YES

WORKING TOWARD VPP "STAR" STATUS THROUGH EMPLOYEE INVOLVEMENT

KEH 0008.00 (12/94) KEF065

6) Were the design inputs correctly incorporated?

YES

7) Is the design output reasonable compared to the design input?

YES

8) Are necessary design input and verification requirements for interfacing organizations specified in design documents or in supporting procedures or instructions?

YES

9) Was the applicable Hanford Plant Standards (HPS) followed? If not, is documented approval included from DOE-RL?

YES SDC 4.1, Rev. 12 was followed.

FLUOR DANIEL NOTRHWEST INC	CALCULATION IDENTIFICATION AND INDEX	Page i of iii Date: 02/22/1995

This sheet shows the status and description of the attached Design Analysis sheets.

Discipline *Civil/Structural* WO/Job No. *ER 4319/W320* Calculation No. *W320-24-016*

Project No. & Name *W320 Tank 241-C-106 Sluicing*

Calculation Item *Sluice Pit AY-02E Analysis.*

These calculations apply to:

Dwg. No. *H-2-818454 shts 1,2,3 and 4.* Rev. No. *1/1/1/1*

Dwg. No. Rev. No.

Other (Study, CDR) N/A Rev. No. *N/A*

The status of these calculations is:

[] Preliminary Calculations

[X] Final Calculations

[] Check Calculations (On Calculation Dated)

[] Void Calculation (Reason Voided)

Incorporated in Final Drawings? [X] Yes [] No

This calculation verified by independent "check" calculations? [] Yes [X] No

Original and Revised Calculation Approvals:

	Rev. 0 Signature/Date	Rev. 1 Signature/Date	Rev. 2 Signature/Date
Originator	*John W. Funk 02/22/95*	*James R. Booth 8/8/95*	*Ronald W. Davidson 3/1/96* *Michael B. Lasota 3/14/97*
Checked by	*James R. Booth 3/8/95*	*Ronald W. Davidson 8/9/95*	*William J. Magruder 4/2/96* *Ronald W. Davidson 3/25/97*
Approved by	*Ronald W. Davidson 3/10/95*	*Ronald W. Davidson 8/9/95*	*Ronald W. Davidson 3/25/97*
Checked Against Approved Vendor Data			3/25/97

INDEX

Design Analysis Page No.	Description
1	*Objective, Criteria, Methods, References, Assumptions, Conclusions.*
2-17	*Calculation.*
ATTACH 1	*Pipe Loads.*
ATTACH 2	*Seismic Computer Analysis*
ATTACH 3	*Static Computer Analysis.*
ATTACH 4	*CGI for Nonshrinnk Epoxy Grout.*
ATTACH 5	*Verification of frequency (rigid range).*
ATTACH 6	*Revised Encasement, Pipe and Jumper loads.*

FLUOR DANIEL NOTRHWEST INC	CALCULATION IDENTIFICATION AND INDEX Continuation Sheet	Page ii of iii Date 02/22/1995

Discipline *Civil/Structural* WO/Job No. *ER 4319/W320* Calculation No. *W320-24-016*

	Rev. 0 Signature/Date	Rev. 1 Signature/Date	Rev. 2 Signature/Date
Originator	*John W. Funk 02/22/95*	*James R. Booth 8/8/95*	*Ronald W. Davidson 3/1/96* *Michael B. Lasota 3/14/97*
Checked by	*James R. Booth 3/8/95*	*Ronald W. Davidson 8/9/95*	*William J. Magruder 4/2/96* *Ronald W. Davidson 3/25/97*

INDEX

Design Analysis Page No.	Description

REVISION

Revision No.	Description
0	*Initial issue*
1	*Added sheet 5a and Attachment 2.*
2	*Conclusion expanded on page 15 to provide reference to calc W320-24-032 for re-analysis of cover blocks based on ECN-W320-173 and address final piping/jumper loads. Added pages 3a and 4a in Attachment 6. Revised pages 9 thru 12, replaced page 5, added page 4b in Attachment 6.*

DESIGN VERIFICATION RECORD

Project/Document Number W320 TANK SLUICING PIT AY-02E CALCS W320-24-016, 017 REV 1.0

Prepared By G. L. HOPKINS (Print); _____ (Print); _____ (Print)

Verifier Name G. L. HOPKINS (Print) Initial GLH Date 8-14-95

Verifier Name _____ (Print) Initial _____ Date _____

Verifier Name _____ (Print) Initial _____ Date _____

Formal Design Verification is determined to be necessary per the Design Verification Screening Criteria and was performed by the following method(s).

1. Alternate Calculation Method YES (NO) (Circle One)
   Calculation Number _____ Revision _____
2. Testing Method YES (NO) (Circle One)
   Test Number _____ Revision _____
   Test Title _____
3. Identical Method YES (NO) (Circle One)
   Document Number _____ Revision _____
   Title _____ Date _____
4. Design Review Method (YES) NO (Circle One)
   Design Review Chairman G. L. HOPKINS
   Finding or Attached Memo Report Number SEE ATTACHED TOM & F 8-14-95 FROM G. L. HOPKINS TO C. B. ORGAN.
   _____ Date _____

Formal design verification is complete and acceptable:

Design Verification Officer C B Organ Date 8/14/95

ATTACH ALL DOCUMENTATIO VERIFICATION CONDUCTED.

KEH-1980.00 (06/91)

ICF Kaiser Hanford Company

INTEROFFICE MEMORANDUM

TO C. B. Organ E6-01
Design Verification Officer

DATE March 31, 1995

FROM G. L. Hopkins G3-17

COPIES TO
J. R. Booth S3-07
R. W. Davidson S3-07
M. A. Haq G3-17
M. S. Ruben E6-46
Eng Doc Control G3-11

JOB NO. ER4319

SUBJECT STRUCTURAL ANALYSIS OF SLUICING PIT AY-02E

REFERENCES
1. Design Calculation Number W320-24-016
2. H-2-818454 Sht 1/2, H-2-818453 Sht 1/2 Plans, Sect & Details

This memo and attached form KEH 1980.00 (06/91) are in response to your IOM of February 9, 1995, to perform a design verification for the subject project. This design verification is in accordance with "Design Review Method" as define by ICF Kaiser (ICF KH) procedure ES 7, Rev. 3, Section 6.2.

Responses to the questions of Section 6.2.1.4 of procedure ES 7 are as follows:

1) Were the design inputs correctly selected?

YES This conclusion is based on the review of the following document: FDC Rev 2 Tank 241-C-106 Sluicing, Definitive Design.

2) Were all necessary conditions considered in the design?

YES

3) Are required assumptions adequately described? Are sources identified reasonable for the design?

YES

4) Was appropriate design method used?

YES

5) Where necessary, are the assumptions reverified when the design is complete?

YES

6) Were the design inputs correctly incorporated?

YES

7) Is the design output reasonable compared to the design input?

YES

8) Are necessary design input and verification requirements for interfacing organizations specified in design documents or in supporting procedures or instructions?

YES

9) Was the applicable Hanford Plant Standards (HPS) followed? If not, is documented approval included from DOE-RL?

YES SDC 4.1, Rev. 12 was followed.

DESIGN VERIFICATION RECORD

Project/Document Number W320 TANK SLURRING - CALC # W-320-24-016

Prepared By G.L. HOPKINS (Print) ; _____ (Print) ; _____ (Print)

Verifier Name G.L. HOPKINS (Print) Initial GLH Date 3-31-95

Verifier Name _____ (Print) Initial _____ Date _____

Verifier Name _____ (Print) Initial _____ Date _____

Formal Design Verification is determined to be necessary per the Design Verification Screening Criteria and was performed by the following method(s).

1. Alternate Calculation Method YES (NO) (Circle One)
   Calculation Number _____ Revision _____
2. Testing Method YES (NO) (Circle One)
   Test Number _____ Revision _____
   Test Title _____
3. Identical Method YES (NO) (Circle One)
   Document Number _____ Revision _____
   Title _____ Date _____
4. Design Review Method (YES) NO (Circle One)
   Design Review Chairman G.L. HOPKINS
   Finding or Attached Memo Report Number SEE ATTACHED IOM OF 3-31-95 FROM G.L. HOPKINS TO C.B. ORGAN
   Date 3-31-95

Formal design verification is complete and acceptable:

Design Verification Officer [signature] Date 3/31/95

ATTACH ALL DOCUMENTATION REI RIFICATION CONDUCTED.

KEH-1980.00 (06/91)

CALCULATION CROSS INDEX (Typical)

Subject Calculation No. _____

Page ii of iii

Subject Calculation Revision No.	Superceded by Calculation No.	These interfacing calculation/documents provide input to the subject calculation, and if revised may require revision of the subject calculation.		Results and conclusions of the subject calculation are used in these interfacing calculations and/or documents.		Does the output interface calculation/ documents require revision?		Has the output interface calculation/ documents been revised?		Discipline manager's signature and date indicating evaluation complete.
		Calculation/Document No.	Revision No.	Calculation/Document No.	Revision No.	Yes	*No	Yes	No	
—	—	H-2-818454 sh 1,2	0	H-2-818454 sh 1,2	0					[illegible] 3/10/95

DESIGN VERIFICATION SCREENING CRITERIA

Project/Document No. W320 - 24-016

When the design or design change affects hardware, formal design verification must be performed if one or more of the following questions must be answered affirmatively (YES).

YES	NO	
✓		1. Does the design or design change involved meet the established criteria to be considered Safety Class 1 or 2?
	✓	2. Does this design or design change cause or permit changes to Safety Class 1 or 2 instrument or alarm setpoints outside of previously approved operational limits?
	✓	3. Does this design or design change significantly affect the nuclear safety consequences of a malfunction or failure of the structure, system, or component?
	✓	4. Does this design or design change involve or change design that has previously undergone formal design verification?

Assigned Lead Engineer — Date: 3/10/95

Responsible Discipline Manager — Date: 3/10/95

Original Design Package Distribution:

Project Manager

Design Verification Officer

Engineering Document Control

Design Change Distribution:

Attach to Engineering Change Notice

KEH-1981.00 (06/91

DESIGN VERIFICATION SCREENING CRITERIA

Project/Document No. Calculation W320-24-016 Rev 2 (Rev 2 changes only)

When the design or design change affects hardware, independent design verification must be performed if one or more of the following questions must be answered affirmatively (YES).

Revision 2 added references to another calculation for the coverblocks and incorporated final piping loads which did not change the original analysis. See conclusion on page 15.

YES	NO	
	✓	1. Does the design or design change involved meet the established criteria to be considered Safety Class?
	✓	2. Does this design or design change cause or permit changes to Safety Class instrument or alarm setpoints outside of previously approved operational limits?
	✓	3. Does this design or design change significantly affect the nuclear or environmental safety consequences of a malfunction or failure of the structure, system, or component?
	✓	4. Does this design or design change involve or change design that has previously undergone formal design verification?

Ann L. Langevin — Assigned Lead Engineer — 4/20/98 Date

J. Klaasen PLE — Engineering Manager — 4/20/98 Date

Original Design Package Distribution:

Project Manager

Engineering Manager

Technical Document Control

Design Change Distribution:

Attach to Design Change Notice

A-6002-330 (04/97)

DESIGN ANALYSIS

Client: WHC
Subject: Sluice Pit Ay-02E Analysis

Location: 241-AY-102 Tank

WO/Job No. W-320 /ER4319
Date: 02/22/95 By: JW FUNK
Checked: 3/8/95 By: JRB
Revised: By:

OBJECTIVE: The purpose of this evaluation is to determine that the existing walls of 241-AY-102 Sluice Pit are adequately designed to take the new pipe loads, jumper loads, seismic loads and also existing soil loads without affecting the structural integrity of the pit. The loads will be divided into two cases; static plus sluicing operation and static plus sluicing operation plus design base earthquake. The two cases will be analyzed to determine the worst condition. These pit walls will be analyzed as the worst case at AY-102 Tank. The cover blocks will also be evaluated for adequate reinforcement for equipment weight, self weight, snow load, seismic loads and hole penetrations.

CRITERIA: The criteria for evaluation of pit walls is outlined in SDC 4.1 Rev 11. The walls and cover blocks will be analyzed as Safety Class 1 structures.

Functional Design Criteria(FDC) for Tank 241-C-106 Waste Retrieval, Project W-320 Rev2

METHODS: MATHCAD 4.0 (A474) was used for load case calculations, modulus of elasticity calculations and evaluation of the pit walls.

IMAGES 3D Rev 2.0 was used for analysis of the pit walls.

REFERENCES:

1. SDC 4.1 REV 11
2. UBC 1994
3. ASCE 7-93, Minimum Design Loads for Buildings and Other Structures
4. ACI 318-94
5. ACI 349-94
6. ASCE 4-86, Seismic Analysis of Safety Related Nuclear Structures
7. Foundation Engineering Handbook, Yang and Fang, 2nd Edition
8. Reinforced Concrete Design, Wang and Salmon, 2nd Edition
9. U.S. Nuclear Regulatory Commission NUREG-0800, 3.7.2-Seismic System Analysis
10. UCRL-15910
11. Soils Report W320, Shannon and Wilson, April 1994
12. H-2-64322, SH-1 FOR (F'_c) & (f_y).

ASSUMPTIONS:

1. Due to relatively small overall dimensions of the pit, and a thick (12") reinforced concrete walls, rigid response of the pit is assumed. As a consequence the ground acceleration is used as a seismic input.
2. FLUID PRESSURE NOT ADDRESSED SINCE WATER TABLE DEPTH AT 200 FT BELOW THE GROUND SURFACE. (REF. 11, pg. 11)

CONCLUSION: See page 12 and 15 of this calculation.

DESIGN ANALYSIS

Client: WHC
Subject: Sluice Pit AY-02E Analysis

Location: 241-AY-102 Tank

WO/Job No. W-320 /ER4319
Date: 02/22/95 By: JW FUNK
Checked: 3/8/95 By: JRB
Revised: By:

***** An evaluation will be performed on the south wall of the sluice pit. This wall was determined ***** to be the most critical wall of the sluice and pump pits. This was determined by pipe loads being greatest on this pit wall (SEE pg 5 this calc).

The existing walls are Safety Class 1 therefore this analysis on the walls must be equivalent. An equivalent static evaluation will be used in lieu of a dynamic anlysis for a simplified but conservative approach. For the equivalent static force method use a 1.5 coefficient for the seismic loads (REF 9). This factor will be applied in the static analysis(ATTACHMENT 2) when load factors are used to combine plate stresses. The factor is applied there to increase all seismic forces by 1.5 coefficient. Since the concrete pit is a rigid unit, the peak ground response of 0.2g will be used for the pit. Since the cover blocks are not rigidly attached to the pit, the peak response spectra acceleration at 10% damping was used.

SLUICE PIT SOUTH WALL ANALYSIS

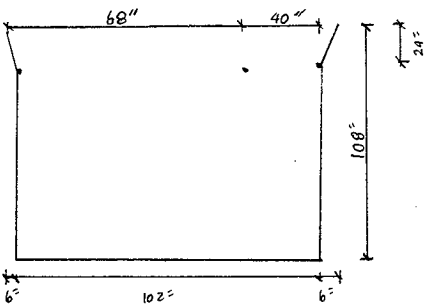

HNF-2466, Rev. 0
Page B-13

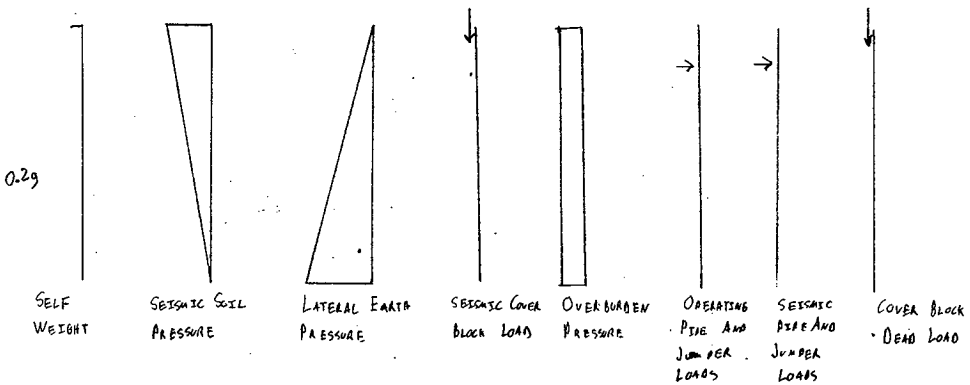

DESIGN ANALYSIS

Client: WHC
Subject: Sluice Pit AY-02E Analysis

Location: 241-AY-102 Tank

WO/Job No. W-320 /ER4319
Date: 02/22/95 By: JW FUNK
Checked: 3/8/95 By: JRB
Revised: By:

LOAD CASE 1 -Self Weight

For calculations use lateral acceleration of 0.2g. (REF 1)

LOAD CASE 2 -Seismic Soil Pressure (REF 6, pg.38)

$\alpha_H := 0.2$ $C_v := 0.87$ For Poisson's ratio = 0.2

$H := 8.00 \cdot ft$ $\gamma := 132 \cdot \frac{lbf}{ft^3}$ (REF 11, TBL 2)

$F_r := \alpha_H C_v \cdot \gamma \cdot H^2$

$F_r = 1469.95 \cdot \frac{lbf}{ft}$

$F_r = \frac{p_e \cdot H}{2}$ $p_e := \frac{2 \cdot F_r}{H}$ $p_e = 2.55 \cdot psi$

LOAD CASE 3 -Lateral Earth Pressure (REF 7, pg. 452)

$K_a := 0.22$ (REF 11 , TBL 2)

$p := K_a \cdot \gamma \cdot H$ $p = 1.61 \cdot psi$

LOAD CASE 4 -Seismic Cover Block Load

Weight of Cover Blocks (See pg 16 and 17)

$z := 0.33$ Response Spectra Acceleration (REF 1, pg. 23) @ 10% Damping (REF 10, pg 4-13)

$w_1 := 10635$ lbs $w_2 := 7825$ lbs

$F_{H1} := z \cdot w_1$ $F_{H1} = 3509.55$ lbs $F_{H2} := z \cdot w_2$ $F_{H2} = 2582.25$ lbs

$F_{V1} := \frac{2}{3} \cdot F_{H1}$ $F_{V1} = 2339.7$ lbs $F_{V2} := \frac{2}{3} \cdot F_{H2}$ $F_{V2} = 1721.5$ lbs

DESIGN ANALYSIS

Client: WHC
Subject: Sluice Pit AY-02E Analysis

Location: 241-AY-102 Tank

WO/Job No. W-320 /ER4319
Date: 02/22/95 By: JW FUNK
Checked: 3/8/95 By: JRB / Rev 3/30/95
Revised: By:

Horizontal seismic loads from the cover blocks will be disregarded since the combination of the self weight, seismic soil pressure, lateral earth pressure, overburden pressure and pipe and jumper loads are more conservative than the combination of the reactive earth pressure and the horizontal cover block loads during a seismic event. The wall acts as a plate fixed on three sides under soil and pipe loads which is also more conservative than the wall acting as a plate fixed on three sides and pinned on the other side under the cover block loads and reactive earth pressure.

Assume that the vertical cover block loads will act as three concentrated loads on the wall. The load will act half at each end of the cover block.

LOAD CASE 5 - Overburden Pressure

Surcharge: $f = 200 \cdot \frac{psf}{ft \cdot depth}$ (REF 2, TBL 29-B)

$f = 1.389 \cdot \frac{psi}{in \cdot depth}$

LOAD CASE 6 -Operating Pipe and Jumper Loads See pg 5.

LOAD CASE 7 -Seismic Pipe and Jumper Loads See pg 5.

LOAD CASE 8 -Cover Block Dead Load See pg 16 and 17.

Load at node 109: $\frac{10634.38}{4} = 2658.59$ Say 2660 lbs

Load at node 115: $\frac{10634.38}{4} + \frac{7824.48}{4} = 4614.72$ Say 4620 lbs

Load at node 120: $\frac{7824.48}{4} = 1956.12$ Say 1960 lbs

Rev 3/30/95

FINAL STATEMENT FOR LOAD CASES 3 & 5:

Using the value of active pressure (Ka= 0.22) based on reference 11 to determine the lateral earth pressure on the pit wall versus values in SDC 4.1 R11 is offset by load case 5 which assumes a UBC maximum value of 200 psf/ft of depth for lateral surcharge effects on pit wall. In fact, the allowable uniform live loading on AY -102 is limited to a maximum of q= 40 psf, which would add (Ka*q) additional pressure in the active case on the pit wall. The combined effect of load case 3 and 5 as defined is approximately equivalent to specifying a Ko value of 0.7 for the static case combined with allowable surcharge at Ay-Farm.

FLUOR DANIEL NORTHWEST INC.

DESIGN ANALYSIS

Calc. No. *W320-24-016*
Revision No.: 2
Page No. *5* of

Client *NHC*
Subject *Sluice Pit AY-02E Analysis*
Location *241-AY-102 Tank*

WO/Job No. *W320/ER4319*
Date: 3/14/97 By: *M.B. Lasota*
Checked: By: *R.W. Davidson*
Revised: By:

U-2 OPERATING LOADS
241-AY-02E Sluice Pit

	F_x lbf	F_y lbf	F_z lbf	M_x in-lbf	M_y in-lbf	M_z in-lbf
Pipe rev. 0	499	77	859	1284	28656	60
Pipe rev. 1	67	633	964	972	33396	36
Encasement	0	0	2782	0	0	0
Jumper rev. 0	266	852	208	6156	972	4620
Jumper rev. 1	116	1222	300	6912	1164	1308
Jumper rev. 2	125	865	157	5388	756	4644
Total rev. 0	765	929	3849	7440	29628	4680
Total rev. 1	183	1855	4046	7884	34560	1344
Total rev. 2	192	1498	3903	6360	34152	4680
Total rev1/rev0	0.24	2.00	1.05	1.06	1.17	0.29
Total rev2/rev0	0.25	1.61	1.01	0.85	1.15	1.00

U-2 SEISMIC LOADS
241-AY-02E Sluice Pit

	F_x lbf	F_y lbf	F_z lbf	M_x in-lbf	M_y in-lbf	M_z in-lbf
Encasement	0	0	2938	0	0	0
Jumper rev. 0	756	973	1249	6072	7320	5556
Jumper rev. 1	102	373	148	2280	1308	1032
Jumper rev. 2	102	86	125	1128	636	816
Total rev. 0	756	973	4187	6072	7320	5556
Total IMAGES	765	929	3849	7440	29630	4680
Total rev. 1	102	373	3086	2280	1308	1032
Total rev. 2	102	86	3063	1128	636	816
Total rev1/IMAGES	0.13	0.40	0.80	0.31	0.04	0.22
Total rev2/IMAGES	0.13	0.09	0.80	0.15	0.02	0.17

3202416.XLS

DESIGN ANALYSIS

Client: WHC
Subject: Sluice Pit AY-02E Analysis

Location: 241-AY-102 Tank

WO/Job No. W-320 /ER4319
Date: 02/22/95 By: JW FUNK
Checked: 3/8/95 By: JRB
Revised: By:

MODULUS OF ELASTICITY FOR CRACKED TRANSFORMED SECTION (h=7.63")

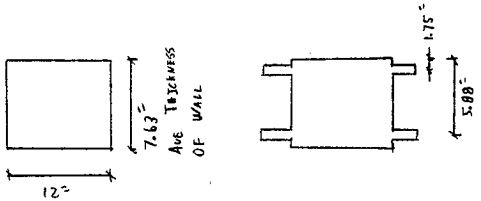

#4 Bar at 12" O.C.
#5 Bar ar 12" O.C.
A_s=0.20 in^2/ft
A_s=0.31 in^2/ft

From dwg H-2-64322, sht 1, rev 3, f_c' = 3000 psi, therefore use 2800 psi conservatively.

$A_{s4} := 0.2$ in^2 $A_{s5} := 0.31$ in^2

$E_s := 29 \cdot 10^6$ $A_{sav} := \frac{A_{s4} + A_{s5}}{2}$ $A_{sav} = 0.26$ in^2 $f_c := 2800$ psi

$E_c := 57000 \cdot \sqrt{f_c}$ $E_c = 3.02 \cdot 10^6$ psi

$n := \frac{E_s}{E_c}$ $n = 9.61$

$A_{stp} := (n - 1) \cdot A_{sav}$ $A_{sbt} := (n) \cdot A_{sav}$

$A_{stp} = 2.2$ in^2 $A_{sbt} = 2.45$ in^2

Locate Neutral Axis

$$12 \cdot \frac{x^2}{2} + 2.2 \cdot (x - 1.75) = 2.45(5.88 - x)$$

$$6 \cdot x^2 + 4.65 \cdot x - 18.26 = 0$$ Guess $x := 2$

$$\text{root}\left[\left(6 \cdot x^2 + 4.65 \cdot x\right) - 18.26, x\right] = 1.4 \text{ in}$$

DESIGN ANALYSIS

Client: WHC
Subject: Sluice Pit AY-02E Analysis

Location: 241-AY-102 Tank

WO/Job No. W-320 /ER4319
Date: 02/22/95 By: JW FUNK
Checked: 3/8/95 By: JRB
Revised: By:

Determine Moment of Inertia

$$I_e = \frac{b \cdot h^3}{3} + A \cdot d^2 \qquad t := 7.63 \text{ in} \qquad \text{(Wall Thickness)}$$

$$I_e := \frac{1}{3} \cdot 12 \cdot 1.4^3 + 2.2 \cdot (1.4 - 1.75)^2 + 2.45 \cdot (5.88 - 1.4)^2$$

$$I_e = 60.42 \quad \text{in}^4$$

$$E_c \cdot I_e = E_{eq} \cdot I_s \qquad I_s = \frac{b \cdot h^3}{12} \qquad b = 12 \qquad I_s = t^3$$

$$E_{eq} := \frac{E_c \cdot I_e}{t^3}$$

$$E_{eq} = 4.1 \cdot 10^5 \quad \text{psi} \qquad \text{for h=7.63"}$$

MODULUS OF ELASTICITY FOR CRACKED TRANSFORMED SECTION (h=12")

Steel area is same as 7.63" wall

Locate Neutral Axis

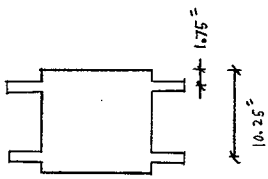

$$\frac{12 \cdot x^2}{2} + 2.2 \cdot (x - 1.75) = 2.45 \cdot (10.25 - x)$$

$$6 \cdot x^2 + 4.65 \cdot x - 28.96 = 0$$

$$\text{root}\left[\left(6 \cdot x^2 + 4.65 \cdot x\right) - 28.96, x\right] = 1.84 \qquad \text{in}$$

Determine Moment of Inertia

$$I_e = \frac{b \cdot h^3}{3} + A \cdot d^2 \qquad t_2 := 12 \text{ in} \qquad \text{(Wall Thickness)}$$

$$I_e := \frac{1}{3} \cdot 12 \cdot 1.84^3 + 2.2 \cdot (1.84 - 1.75)^2 + 2.45 \cdot (10.25 - 1.84)^2$$

$$I_e = 198.22 \quad \text{in}^4$$

$$E_{eq} := \frac{E_c \cdot I_e}{t_2^{\,3}}$$

$$E_{eq} = 3.46 \cdot 10^5 \quad \text{psi} \qquad \text{for h=12.0"}$$

DESIGN ANALYSIS

Client: WHC
Subject: Sluice Pit AY-02E Analysis

Location: 241-AY-102 Tank

WO/Job No. W-320 /ER4319
Date: 02/22/95 By: JW FUNK
Checked: 3/8/95 By: JRB
Revised: By:

COMPUTER ANALYSIS

An equivalent static analysis will be performed on the critical sluice pit wall using the following load combinations:

1. $U = 1.4\,D + 1.7\,H + 1.7\,R_o$ (REF 5, pg 31)

2. $U = D + H + R_o + E_{ss}$ (REF 5, pg 31)

*****The loads that were used were the transfer pipe load at nozzle U-2 and the jumper load at ***** nozzle U-2. The pipe and jumper loads acting on the wall were broken up into two classifications operating(thermal) and seismic loads(See pg 5). The operating load component acts with the lateral earth pressure, overburden pressure and cover block loads in a static case. The seismic component acts with the amplified self weight, seismic soil pressure, lateral earth pressure, operating reactions, cover block loads and overburden pressure in a seismic case. The two cases were analyzed on IMAGES 3D Rev 2.0 (ATTACHMENT 2 and ATTACHMENT 3) and the seismic case generated the highest stresses in the wall and will be analyzed in this calculation.

DESIGN ANALYSIS

Client: WHC
Subject: Sluice Pit AY-02E Analysis
Location: 241-AY-102 Tank

WO/Job No.: W-320/ER4319
Date: 02/22/95 By: JW FUNK
Checked: By: R.W. Davidson
Revised: 3/17/97 By: M.B. Lasota

EVALUATION OF STRESS IN WALL (h=7.63")

$\sigma_x := 199.8 \cdot psi$ Plate # 110 from ATTACH 2, pg 64.

$\sigma_y := 61.4 \cdot psi$ Plate # 110 from ATTACH 2, pg 64.

$\tau_{xz} := 50.3 \cdot psi$ Plate # 110 from ATTACH 2, pg 64.

Bending moments for 1' wide strip of wall.

$b := 12 \cdot in$ $h := 7.63 \cdot in$

$S_x := \frac{b \cdot h^2}{6}$ $S_x = 116.43 \cdot in^3$ $S_y := S_x$ $S_y = 116.43 \cdot in^3$

$M_x := \sigma_x \cdot S_x$ $M_x = 23263.47 \cdot in \cdot lbf$ $M_y := \sigma_y \cdot S_y$ $M_y = 7149.04 \cdot in \cdot lbf$

$V := \tau_{xz} \cdot b \cdot h$ $V = 4605.47 \cdot lbf$

The wall was analyzed utilizing IMAGES 3D program. Both runs i.e. NY36220 - Seismic Analysis of Pit Wall and ON43317 - Static Analysis of Pit Wall are based on linear stress-strain dependence hence analyses are linear-elastic. Stresses in the wall are therefore proportional to the load magnitude. As a result of the revision 2, loads resulting in plate Membrane stress and Bending stress increased by a maximum factor of 1.61 (see page 5 of the calculations - Fy component) whereas the loads resulting in shear stress icreased by a maximum factor of 1.153. The next step in simplified evaluation is to increase ultimate loads by respective factors and compare them to section capacity. Δ2

Check Horizontal Reinforcement.

$M_u := M_x$ $M_u = 1.94 \cdot ft \cdot kips$ $f_c := 2800 \cdot psi$ $f_y := 40000 \cdot psi$ Δ2

$M_{uadj} := 1.61 \cdot M_u$ $M_{uadj} = 3.12 \cdot ft \cdot kips$

From dwg H-2-64322, sht 1, rev 3, f_y = 40000 psi.

$d := h - 1.5 \cdot in - 0.5 \cdot in \cdot \frac{1}{2}$ $d = 5.88 \cdot in$ $\beta_1 := 0.85$

$A_s := 0.31 \cdot in^2$ $a := \frac{A_s \cdot f_y}{0.85 \cdot f_c \cdot b}$ $a = 0.43 \cdot in$ $\phi := .0.9$

$M_{max} := \phi A_s \cdot f_y \cdot \left(d - \frac{a}{2}\right)$ $M_{max} = 5.27 \cdot ft \cdot kips$ > $M_{uadj} = 3.12 \cdot ft \cdot kips$ ∴ OK Δ2

Reinforcement is adequate in one face therefore a doubly reinforced analysis is not necessary.

DESIGN ANALYSIS

Client: WHC
Subject: Sluice Pit AY-02E Analysis

Location: 241-AY -102 Tank

WO/Job No.: W-320/ER4319
Date: 02/22/95 By: JW FUNK
Checked: By: R.W. Davidson
Revised: 3/17/97 By: M.B. Lasota

Check Vertical Reinforcement

$M_u := M_y \qquad M_u = 0.6 \cdot ft \cdot kips \qquad f_c = 2800 \cdot psi \qquad f_y = 40000 \cdot psi$

$M_{uadj} := 1.61 \cdot M_u \qquad M_{uadj} = 0.96 \cdot ft \cdot kips$

From dwg H-2-64322, sht 1, rev 3, f_y = 40000 psi.

$d := h - 1.5 \cdot in - 0.5 \cdot in \cdot \frac{1}{2} \qquad d = 5.88 \cdot in \qquad \beta_1 := 0.85$

$A_s := 0.20 \cdot in^2 \qquad a := \frac{A_s \cdot f_y}{0.85 \cdot f_c \cdot b} \qquad a = 0.28 \cdot in \qquad \phi := 0.9$

$M_{max} := \phi \cdot A_s \cdot f_y \cdot \left(d - \frac{a}{2}\right) \qquad M_{max} = 3.44 \cdot ft \cdot kips > M_{uadj} = 0.96 \cdot ft \cdot kips$ ∴ **OK**

Reinforcement is adequate in one face therefore a doubly reinforced analysis is not necessary.

Check Wall Shear

$b = 12 \cdot in \qquad d = 5.88 \cdot in \qquad f_c = 2800 \cdot psi$

$V_{adj} := 1.153 \cdot V \qquad V_{adj} = 5310.1 \cdot lbf$

$V_c := 0.85 \cdot 2 \cdot \sqrt{f_c \cdot psi} \cdot b \cdot d \qquad V_c = 6347.26 \cdot lbf > V_{adj} = 5310.1 \cdot lbf$ ∴ **OK**

EVALUATION OF STRESS IN WALL (h=12")

$\sigma_x := 252.0 \cdot psi$ Plate # 99 from ATTACH 2, pg 64.

$\sigma_y := 78.2 \cdot psi$ Plate # 6 from ATTACH 2, pg 57.

$\tau_{xz} := 68.0 \cdot psi$ Plate # 99 from ATTACH 2, pg 64.

DESIGN ANALYSIS

Client: WHC
Subject: Sluice Pit AY-02E Analysis

Location: 241-AY-102 Tank

WO/Job No.: W-320/ER4319
Date: 02/22/95 By: JW FUNK
Checked: By: R.W. Davidson
Revised: 3/17/97 By: M.B. Lasota

Bending moments for 1' wide strip of wall.

$b := 12 \cdot in$ $\quad h := 12 \cdot in$

$S_x := \frac{b \cdot h^2}{6}$ $\quad S_x = 288 \cdot in^3$ $\quad S_y := S_x$ $\quad S_y = 288 \cdot in^3$

$M_x := \sigma_x \cdot S_x$ $\quad M_x = 72576 \cdot in \cdot lbf$ $\quad M_y := \sigma_y \cdot S_y$ $\quad M_y = 22521.6 \cdot in \cdot lbf$

$V := \tau_{xz} \cdot b \cdot h$ $\quad V = 9792 \cdot lbf$

Check Horizontal Reinforcement.

$M_u := M_x$ $\quad M_u = 6.05 \cdot ft \cdot kips$ $\quad f_c = 2800 \cdot psi$ $\quad f_y = 40000 \cdot psi$

$M_{uadj} := 1.61 \cdot M_u$ $\quad M_{uadj} = 9.74 \cdot ft \cdot kips$ Δ2

From dwg H-2-64322, sht 1, rev 3, $f_y = 40000$ psi.

$d := h - 1.5 \cdot in - 0.5 \cdot in \cdot \frac{1}{2}$ $\quad d = 10.25 \cdot in$ $\quad \beta_1 := 0.85$

$A_s := 0.31 \cdot in^2$ $\quad a := \frac{A_s \cdot f_y}{0.85 \cdot f_c \cdot b}$ $\quad a = 0.43 \cdot in$ $\quad \phi := 0.9$

$M_{max} := \phi A_s \cdot f_y \cdot \left(d - \frac{a}{2}\right)$ $\quad M_{max} = 9.33 \cdot ft \cdot kips$

$\frac{M_{uadj}}{M_{max}} = 1.04$ Δ2

The adjusted ultimate moment is about 4% higher than the maximum permissible moment at the section, however the adjusted moment was obtained by increase of the all loads uniformly by the factor of 1.61. Exclusive of the increase are: Self Weight, Seismic Soil Pressure, Lateral Earth Pressure, Seismic Cover Block Load and Overburden Pressure, which are a significant contributors to the Ultimate Moment. Based on the above and the fact that the compression reinforcement has been ignored the Wall is capable of safely resisting Design Loads. Δ2

Check Vertical Reinforcement

$M_u := M_y$ $\quad M_u = 1.88 \cdot ft \cdot kips$ $\quad f_c = 2800 \cdot psi$ $\quad f_y = 40000 \cdot psi$

$M_{uadj} := 1.61 \cdot M_u$ $\quad M_{uadj} = 3.02 \cdot ft \cdot kips$

AYSLUPIT.KC

DESIGN ANALYSIS

Client: WHC
Subject: Sluice Pit AY-02E Analysis

Location: 241-AY-102 Tank

WO/Job No.: W-320/ER4319
Date: 02/22/95 By: JW FUNK
Checked: By: R.W. Davidson
Revised: 3/17/97 By: M.B. Lasota

From dwg H-2-64322, sht 1, rev 3, $f_y = 40000$ psi.

$d := h - 1.5 \cdot in - 0.5 \cdot in \cdot \frac{1}{2}$ $\quad d = 10.25 \cdot in$ $\quad \beta_1 := 0.85$

$A_s := 0.2 \cdot in^2$ $\quad a := \frac{A_s \cdot f_y}{0.85 \cdot f_c \cdot b}$ $\quad a = 0.28 \cdot in$

$M_{max} := \phi \cdot A_s \cdot f_y \cdot \left(d - \frac{a}{2}\right)$ $\quad M_{max} = 6.07 \cdot ft \cdot kips$ > $M_{uadj} = 3.02 \cdot ft \cdot kips$ ∴ **OK**

Δ2

Reinforcement is adequate in one face therefore a doubly reinforced analysis is not necessary.

<u>Check Wall Shear</u>

$b := 12 \cdot in$ $\quad d := 12 \cdot in$ $\quad f_c = 2800 \cdot psi$

$V_{adj} := 1.153 \cdot V$ $\quad V_{adj} = 11290 \cdot lbf$

$V_c := 0.85 \cdot 2 \cdot \sqrt{f_c \cdot psi} \cdot b \cdot d$ $\quad V_c = 12954 \cdot lbf$ > $V_{adj} = 11290 \cdot lbf$ ∴ **OK**

Δ2

Conclusion: The walls of the Sluicing Pit are capable to carry all additional loads from the piping and jumper loads when subjected to a earthquake.

DESIGN ANALYSIS

Client: WHC
Subject: Sluice Pit AY-02E Analysis

Location: 241-AY -102 Tank

WO/Job No. W-320/ER4319
Date: 8/1/95 By: J.R. Booth
Checked: 8/9/95 By: [illegible]
Revised: By:

Revision 1 Objective: The purpose of this revision is to perform an analysis of the new concrete cover blocks required as a result of the size of the Booster Pump. This portion of the calculation supports the Cover Block drawings shown on H-2-818454, Sh. 2-4.

DESIGN LOADS

Dead Load:

$w_d := (4.5 \cdot ft \cdot 2.6 \cdot ft) \cdot 150 \cdot \frac{lb}{ft^3}$

Assumed weight per lineal foot of cover block. (Conservative)

$w_d = 1.76 \cdot \frac{kip}{ft}$

Live Load:

$w_l := (4.5 \cdot ft) \cdot 50 \cdot \frac{lb}{ft^2}$

$w_l = 0.23 \cdot \frac{kip}{ft}$

Seismic Load:

An equivalent static evaluation will be used in lieu of of a dynamic analysis for a simplified but conservative approach. The lateral cover block load must be multiplied by 1.5 per reference 9. In the equivalent static evaluation the fundamental frequency is not calculated but is assumed to be such that the response acceleration is the peak of the response spectrum.

$z := 0.33$

Response Spectra Acceleration (REF 1, pg 35) @ 10% Damping (Conservative)

$F := 1.5 \cdot z \cdot w_d$

$F = 0.87 \cdot \frac{kip}{ft}$

The vertical seismic load is 2/3 of the horizontal load(REF 1).

$w_e := \frac{2}{3} \cdot F$

$w_e = 0.58 \cdot \frac{kip}{ft}$

Environmental Loads: Ashfall loading and snow loading will be combined as stated in SDC 4.1, Rev. 11, page 8 and substituted for tornado loads as stated in the SDC and ACI 349, sec 9.2.1, load case 5. By inspection, a wind blown object as described in SDC 4.1 will not penetrate the cover block.

Ashfall loading = 24 psf
Snow loading = 20 psf

$w_a := \left[(24 + 20) \cdot \frac{lb}{ft^2}\right] \cdot 4.5 \cdot ft$

$w_a = 0.2 \cdot \frac{kip}{ft}$

Combined distributed load from ashfall and snow.

DESIGN ANALYSIS

Client: WHC
Subject: Sluice Pit AY-02E Analysis

Location: 241-AY-102 Tank

WO/Job No. W-320/ER4319
Date: 8/1/95 By: J.R. Booth
Checked: 8/4/95 By: [illegible]
Revised: By:

Combined Loading: The following load cases were determined to be valid load combinations from ACI 349, sec 9.2.1 which will be compared to determine the highest Ultimate Moment.

$L := 8.5 \cdot ft$

$$M_{u1} := 1.4 \cdot \left(\frac{w_d \cdot L^2}{8}\right) + 1.7 \cdot \left(\frac{w_l \cdot L^2}{8}\right)$$

Controls

$M_{u1} = 25.64 \cdot kip \cdot ft$

$$M_{u2} := \frac{w_d \cdot L^2}{8} + \frac{w_l \cdot L^2}{8} + \frac{w_e \cdot L^2}{8}$$

$M_{u2} = 23.11 \cdot kip \cdot ft$

$$M_{u3} := \frac{w_d \cdot L^2}{8} + \frac{w_l \cdot L^2}{8} + \frac{w_a \cdot L^2}{8}$$

$M_{u3} = 19.67 \cdot kip \cdot ft$

$$M_u := \frac{M_{u1}}{kip \cdot ft}$$

Unitless numbers required for using ACI SP-17 Design Handbook.

$M_u = 25.64 \quad kip \cdot ft$

Cover block will be designed as a simply supported beam supported only on two sides.

Determine required flexural reinforcement:

$f_c := 4000 \quad psi$ $\qquad f_y := 60000 \quad psi$

$h := 15.5 \quad in$ $\qquad d := h - (1.5 + 0.375)$

$d = 13.63 \quad in$

Assume #6 bars and take depth of beam at blockout. See H-2-818454, sh. 4.

$b := 4.5 \cdot 12$ $\qquad b = 54 \quad in$

Width of beam

$$F := \frac{b \cdot d^2}{12000}$$

$F = 0.84$

$$K_n := \frac{M_u}{F}$$

$K_n = 30.7$ $\qquad$ Use $K_n := 175$

$a_n := 4.37$

$$A_s := \frac{M_u}{d \cdot a_n}$$

$A_s = 0.43$

DESIGN ANALYSIS

Client: WHC
Subject: Cover Block Design

Location: 241-AY-102 Tank

WO/Job No. W-320/ER4319
Date: 8/1/95 By: J.R. Booth
Checked: 8/9/95 By: [illegible]
Revised: 3/1/96 By: [illegible]

$A_{smin} := .0033 \cdot b \cdot d$

$A_{smin} = 2.43 \quad in^2$ Controls. Use 8-#5 bars.

$A_s := 2.45 \cdot in^2$ Area of flexural reinforcement of 8-#5 bars.

Determine reinforcing requirements for shear.

$$V_u := 1.4 \cdot \frac{w_d \cdot L}{2} + 1.7 \cdot \frac{w_l \cdot L}{2}$$

$V_u = 12.07 \cdot kip$

Allowable Shear:

$V_c := 2 \cdot \sqrt{f_c} \cdot b \cdot d$ $\quad V_c = 93065.83 \quad lbs$ $\quad \phi := 0.85$

$$V_n := \frac{\phi \cdot V_c}{1000}$$

$V_n = 79.11 \quad kip$

$0.5 \cdot V_n = 39.55$

Since $V_u < 0.5 \cdot V_n$ Design for shear reinforcement not required per ACI 349, sec. 11.5.5.1.

Development Length: Development length for number 5 bars in tension is 12 inches. Bars will be extended at least 12 inches past critical sections over the blockout on the key block of pit AY-02E.

Conclusion: Bar sizes and spacing will be similar for both new cover blocks at the Sluice Pit AY-02E since the design presented here represents the worst case of the two cover blocks. Reference H-2-818454, Sh. 2,3, 4, &5.

2 WJM 4/2/96

See Calculation W320-24-032 for re-analysis of SC 3 cover blocks for Sluice Pit AY-02E based on top hat modifications provided in ECN W-320-173. Calculation W320-24-016, Rev 0 for Sluice Pit AY-02E adequately envelopes changes provided in ECN W-320-173.
The final piping/jumper loads provided in Attachment 6, Page 3a & 4a are also adequately enveloped by Rev. 0 of this analysis. No further analysis is required.

2 RW 10/21/96

DESIGN ANALYSIS

Client: WHC
Subject: Sluice Pit AY-02E Analysis

Location: 241-AY-102 Tank

WO/Job No. W-320 /ER4319
Date: 8/1/95 By: J.R. Booth
Checked: 8/9/95 By:
Revised: By:

WEIGHT OF COVER BLOCKS

KEY BLOCK

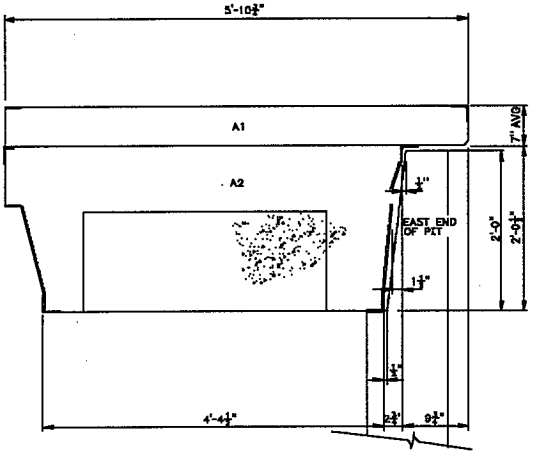

SAY CONCRETE WEIGHS 150 LBS PER CUBIC FOOT.

$A_1 := (5.9 \cdot ft) \cdot (0.6 \cdot ft) \cdot (8.5 \cdot ft)$

$A_1 = 30.09 \cdot ft^3 ft^3$

$WT_1 := A_1 \cdot 150 \cdot \frac{lb}{ft^3}$

$WT_1 = 4513.5 \cdot lb$

$A_2 := (4.4 \cdot ft) \cdot (2 \cdot ft) \cdot (7.5 \cdot ft)$

$A_2 = 66 \cdot ft^3$

$WT_2 := A_2 \cdot 150 \cdot \frac{lb}{ft^3}$

$WT_2 = 9900 \cdot lb$

$WT_{key} := WT_1 + WT_2$

$WT_{key} = 14413.5 \cdot lb$

DESIGN ANALYSIS

Client: WHC
Subject: Sluice Pit Ay-02E Analysis

Location: 241-AY-102 Tank

WO/Job No. W-320 /ER4319
Date: 8/1/95 By: J.R. Booth
Checked: 8/9/95 By:
Revised: By:

BLOCK 2

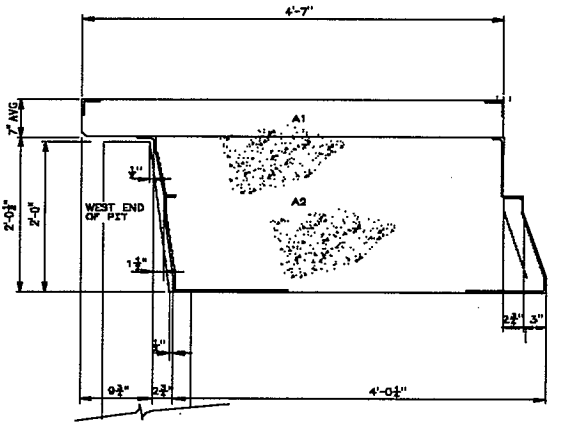

$A_1 := (4.6 \cdot ft) \cdot (0.6 \cdot ft) \cdot (8.5 \cdot ft)$

$A_1 = 23.46 \cdot ft^3$

$WT_1 := A_1 \cdot 150 \cdot \frac{lb}{ft^3}$

$WT_1 = 3519 \cdot lb$

$A_2 := (2 \cdot ft) \cdot (4 \cdot ft) \cdot (6.5 \cdot ft)$

$A_2 = 52 \cdot ft^3$

$WT_2 := A_2 \cdot 150 \cdot \frac{lb}{ft^3}$

$WT_2 = 7800 \cdot lb$

$WT_{block} := WT_1 + WT_2$

$WT_{block} = 11319 \cdot lb$

Client: WHC
Subject: Sluice Pit AY-02E Analysis

Location: 241-AY-102 Tank

WO/Job No. W-320 /ER4319
Date: 02/22/95 By: JW FUNK
Checked: 3/9/95 By: QRB
Revised: By:

ATTACHMENT 1

Pipe and Jumper Loads

2 pgs including this pg

ICF KAISER
HANFORD COMPANY

DESIGN ANALYSIS

Calc. No. W-320-27-029
Revision No. 0
Page No. 2 of 2

Client	WESTINGHOUSE HANFORD CO.	WO/Job No.	ER4319	Filename	U9-A.xls
Subject	AY FARM JUMPER STRESS ANALYSIS	Date	2/23/95	By	D. L. STONE
PROJECT W-320 WASTE RETRIEVAL for TANK 241-C-106		Checked		By	M. M. AHMED
Location	C TANK FARM 200 EAST AREA	Revised		By	

ANCHOR LOADS AT PIT WALLS

Nozzle: U8 U-2 Location: 241-AY-02E SluicePit	Pipe Loads	Pipe Length (*2) (in.)	Friction Force (*3) (lb/in)	Fx (lbs)	Fy (lbs)	Fz (lbs)	Mx (in-lb)	My (in-lb)	Mz (in-lb)
(Outside Pit)	**Inner Pipe**								
Identification: W-320 Supernate Transfer Line Nozzle	(Seismic) (*1)			0	0	0	0	0	0
	(Thermal) (*1)			-499	-77	859	-1284	28656	-60
Node #: A168	**Encasement**								
Orientation: 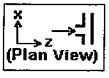	(Seismic) (*4)	L = 120	F1 = 24.48			2938			
	(Thermal) (*5)	L = 120	F2 = 23.18			2782			
	Absolute Sum			6218	77	6578	1284	28656	60

(Inside Pit)	Jumper Loads								
Identification: Jumper U8-A U-2	(Seismic) (*6)			756	973	1249	6072	7320	5556
Dwg. H-2-818503	(Thermal) (*6)			266	-852	208	-6156	-972	4620
Node #: B11									
Orientation: 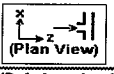	**Absolute Sum**			1022	1825	1457	12228	8292	10176

(*1) (Ref. Autopipe Calc. # W-320-27-013)
(*2) Length of pipe immediately preceding anchor . (Ref. DWG # ES-320-M07)
(*3) For underground pipe. (Ref. STAB Calc. # W-320-27-014)
(*4) LOAD=F1 x L
(*5) LOAD=F2 x L
(*6) (Ref. Autopipe Calc. # W-320-27-029) Filename: A02E-JS

Client: WHC
Subject: Sluice Pit AY-02E Analysis

Location: 241-AY-102 Tank

WO/Job No. W-320 /ER4319
Date: 02/22/95 By: JW FUNK
Checked: By:
Revised: By:

ATTACHMENT 2

Seismic Analysis of Pit Wall

71 pgs including this pg

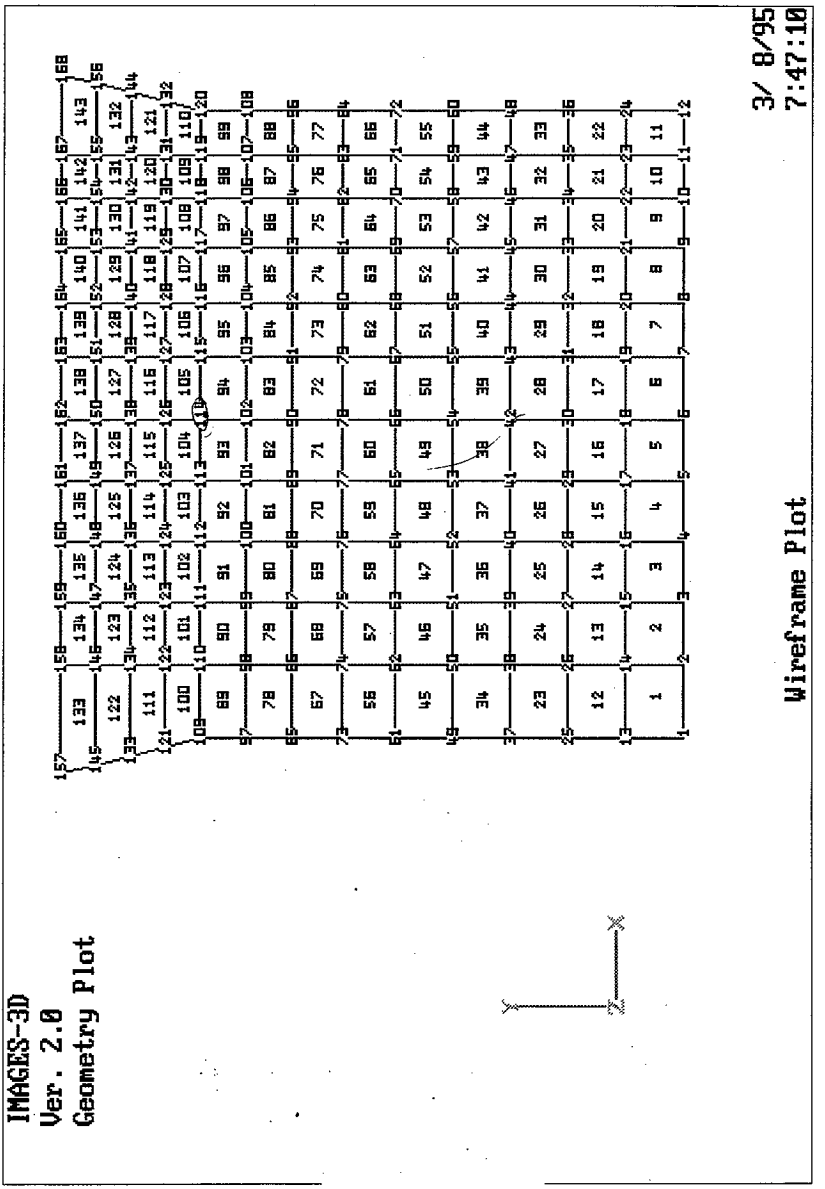
IMAGES-3D
Ver. 2.0
Geometry Plot
3/ 8/95
7:47:10
Wireframe Plot

========== I M A G E S 3 D ==========
= Copyright (c) 1984 Celestial Software Inc. =
==========

CHECK GEOMETRY Version 2.0 07/01/90

MATERIAL PROPERTIES

Material No	Modulus of Elasticity	Weight Density	Coeff of Thermal Exp.	Poisson's Ratio	Shear Web Modulus
1	3.46000E+05	8.68000E-02	5.50000E-06	2.50E-01	0.00000E+00
2	4.10000E+05	8.68000E-02	5.50000E-06	2.50E-01	0.00000E+00

NODE COORDINATES

Node	X-Coord.	Y-Coord.	Z-Coord.
1	6.00000E+00	0.00000E+00	0.00000E+00
2	1.80000E+01	0.00000E+00	0.00000E+00
3	2.80000E+01	0.00000E+00	0.00000E+00
4	3.80000E+01	0.00000E+00	0.00000E+00
5	4.80000E+01	0.00000E+00	0.00000E+00
6	5.80000E+01	0.00000E+00	0.00000E+00
7	6.80000E+01	0.00000E+00	0.00000E+00
8	7.70000E+01	0.00000E+00	0.00000E+00
9	8.60000E+01	0.00000E+00	0.00000E+00
10	9.40000E+01	0.00000E+00	0.00000E+00
11	1.01000E+02	0.00000E+00	0.00000E+00
12	1.08000E+02	0.00000E+00	0.00000E+00
13	6.00000E+00	1.00000E+01	0.00000E+00
14	1.80000E+01	1.00000E+01	0.00000E+00
15	2.80000E+01	1.00000E+01	0.00000E+00
16	3.80000E+01	1.00000E+01	0.00000E+00
17	4.80000E+01	1.00000E+01	0.00000E+00
18	5.80000E+01	1.00000E+01	0.00000E+00
19	6.80000E+01	1.00000E+01	0.00000E+00
20	7.70000E+01	1.00000E+01	0.00000E+00
21	8.60000E+01	1.00000E+01	0.00000E+00
22	9.40000E+01	1.00000E+01	0.00000E+00
23	1.01000E+02	1.00000E+01	0.00000E+00
24	1.08000E+02	1.00000E+01	0.00000E+00
25	6.00000E+00	2.00000E+01	0.00000E+00
26	1.80000E+01	2.00000E+01	0.00000E+00
27	2.80000E+01	2.00000E+01	0.00000E+00
28	3.80000E+01	2.00000E+01	0.00000E+00
29	4.80000E+01	2.00000E+01	0.00000E+00

========== I M A G E S 3 D ==========
= Copyright (c) 1984 Celestial Software Inc. =
==========

CHECK GEOMETRY Version 2.0 07/01/90

Node	X-Coord.	Y-Coord.	Z-Coord.
30	5.80000E+01	2.00000E+01	0.00000E+00
31	6.80000E+01	2.00000E+01	0.00000E+00
32	7.70000E+01	2.00000E+01	0.00000E+00
33	8.60000E+01	2.00000E+01	0.00000E+00
34	9.40000E+01	2.00000E+01	0.00000E+00
35	1.01000E+02	2.00000E+01	0.00000E+00
36	1.08000E+02	2.00000E+01	0.00000E+00
37	6.00000E+00	3.00000E+01	0.00000E+00
38	1.80000E+01	3.00000E+01	0.00000E+00
39	2.80000E+01	3.00000E+01	0.00000E+00
40	3.80000E+01	3.00000E+01	0.00000E+00
41	4.80000E+01	3.00000E+01	0.00000E+00
42	5.80000E+01	3.00000E+01	0.00000E+00
43	6.80000E+01	3.00000E+01	0.00000E+00
44	7.70000E+01	3.00000E+01	0.00000E+00
45	8.60000E+01	3.00000E+01	0.00000E+00
46	9.40000E+01	3.00000E+01	0.00000E+00
47	1.01000E+02	3.00000E+01	0.00000E+00
48	1.08000E+02	3.00000E+01	0.00000E+00
49	6.00000E+00	4.00000E+01	0.00000E+00
50	1.80000E+01	4.00000E+01	0.00000E+00
51	2.80000E+01	4.00000E+01	0.00000E+00
52	3.80000E+01	4.00000E+01	0.00000E+00
53	4.80000E+01	4.00000E+01	0.00000E+00
54	5.80000E+01	4.00000E+01	0.00000E+00
55	6.80000E+01	4.00000E+01	0.00000E+00
56	7.70000E+01	4.00000E+01	0.00000E+00
57	8.60000E+01	4.00000E+01	0.00000E+00
58	9.40000E+01	4.00000E+01	0.00000E+00
59	1.01000E+02	4.00000E+01	0.00000E+00
60	1.08000E+02	4.00000E+01	0.00000E+00
61	6.00000E+00	5.00000E+01	0.00000E+00
62	1.80000E+01	5.00000E+01	0.00000E+00
63	2.80000E+01	5.00000E+01	0.00000E+00
64	3.80000E+01	5.00000E+01	0.00000E+00
65	4.80000E+01	5.00000E+01	0.00000E+00
66	5.80000E+01	5.00000E+01	0.00000E+00
67	6.80000E+01	5.00000E+01	0.00000E+00
68	7.70000E+01	5.00000E+01	0.00000E+00
69	8.60000E+01	5.00000E+01	0.00000E+00
70	9.40000E+01	5.00000E+01	0.00000E+00
71	1.01000E+02	5.00000E+01	0.00000E+00

========== I M A G E S 3 D ==========
= Copyright (c) 1984 Celestial Software Inc. =
==========

CHECK GEOMETRY Version 2.0 07/01/90

Node	X-Coord.	Y-Coord.	Z-Coord.
72	1.08000E+02	5.00000E+01	0.00000E+00
73	6.00000E+00	5.90000E+01	0.00000E+00
74	1.80000E+01	5.90000E+01	0.00000E+00
75	2.80000E+01	5.90000E+01	0.00000E+00
76	3.80000E+01	5.90000E+01	0.00000E+00
77	4.80000E+01	5.90000E+01	0.00000E+00
78	5.80000E+01	5.90000E+01	0.00000E+00
79	6.80000E+01	5.90000E+01	0.00000E+00
80	7.70000E+01	5.90000E+01	0.00000E+00
81	8.60000E+01	5.90000E+01	0.00000E+00
82	9.40000E+01	5.90000E+01	0.00000E+00
83	1.01000E+02	5.90000E+01	0.00000E+00
84	1.08000E+02	5.90000E+01	0.00000E+00
85	6.00000E+00	6.80000E+01	0.00000E+00
86	1.80000E+01	6.80000E+01	0.00000E+00
87	2.80000E+01	6.80000E+01	0.00000E+00
88	3.80000E+01	6.80000E+01	0.00000E+00
89	4.80000E+01	6.80000E+01	0.00000E+00
90	5.80000E+01	6.80000E+01	0.00000E+00
91	6.80000E+01	6.80000E+01	0.00000E+00
92	7.70000E+01	6.80000E+01	0.00000E+00
93	8.60000E+01	6.80000E+01	0.00000E+00
94	9.40000E+01	6.80000E+01	0.00000E+00
95	1.01000E+02	6.80000E+01	0.00000E+00
96	1.08000E+02	6.80000E+01	0.00000E+00
97	6.00000E+00	7.60000E+01	0.00000E+00
98	1.80000E+01	7.60000E+01	0.00000E+00
99	2.80000E+01	7.60000E+01	0.00000E+00
100	3.80000E+01	7.60000E+01	0.00000E+00
101	4.80000E+01	7.60000E+01	0.00000E+00
102	5.80000E+01	7.60000E+01	0.00000E+00
103	6.80000E+01	7.60000E+01	0.00000E+00
104	7.70000E+01	7.60000E+01	0.00000E+00
105	8.60000E+01	7.60000E+01	0.00000E+00
106	9.40000E+01	7.60000E+01	0.00000E+00
107	1.01000E+02	7.60000E+01	0.00000E+00
108	1.08000E+02	7.60000E+01	0.00000E+00
109	6.00000E+00	8.40000E+01	0.00000E+00
110	1.80000E+01	8.40000E+01	0.00000E+00
111	2.80000E+01	8.40000E+01	0.00000E+00
112	3.80000E+01	8.40000E+01	0.00000E+00
113	4.80000E+01	8.40000E+01	0.00000E+00

========== I M A G E S 3 D ==========
= Copyright (c) 1984 Celestial Software Inc. =
==========

CHECK GEOMETRY Version 2.0 07/01/90

Node	X-Coord.	Y-Coord.	Z-Coord.
114	5.80000E+01	8.40000E+01	0.00000E+00
115	6.80000E+01	8.40000E+01	0.00000E+00
116	7.70000E+01	8.40000E+01	0.00000E+00
117	8.60000E+01	8.40000E+01	0.00000E+00
118	9.40000E+01	8.40000E+01	0.00000E+00
119	1.01000E+02	8.40000E+01	0.00000E+00
120	1.08000E+02	8.40000E+01	0.00000E+00
121	4.50000E+00	9.00000E+01	0.00000E+00
122	1.80000E+01	9.00000E+01	0.00000E+00
123	2.80000E+01	9.00000E+01	0.00000E+00
124	3.80000E+01	9.00000E+01	0.00000E+00
125	4.80000E+01	9.00000E+01	0.00000E+00
126	5.80000E+01	9.00000E+01	0.00000E+00
127	6.80000E+01	9.00000E+01	0.00000E+00
128	7.70000E+01	9.00000E+01	0.00000E+00
129	8.60000E+01	9.00000E+01	0.00000E+00
130	9.40000E+01	9.00000E+01	0.00000E+00
131	1.01000E+02	9.00000E+01	0.00000E+00
132	1.09500E+02	9.00000E+01	0.00000E+00
133	3.00000E+00	9.60000E+01	0.00000E+00
134	1.80000E+01	9.60000E+01	0.00000E+00
135	2.80000E+01	9.60000E+01	0.00000E+00
136	3.80000E+01	9.60000E+01	0.00000E+00
137	4.80000E+01	9.60000E+01	0.00000E+00
138	5.80000E+01	9.60000E+01	0.00000E+00
139	6.80000E+01	9.60000E+01	0.00000E+00
140	7.70000E+01	9.60000E+01	0.00000E+00
141	8.60000E+01	9.60000E+01	0.00000E+00
142	9.40000E+01	9.60000E+01	0.00000E+00
143	1.01000E+02	9.60000E+01	0.00000E+00
144	1.11000E+02	9.60000E+01	0.00000E+00
145	1.50000E+00	1.02000E+02	0.00000E+00
146	1.80000E+01	1.02000E+02	0.00000E+00
147	2.80000E+01	1.02000E+02	0.00000E+00
148	3.80000E+01	1.02000E+02	0.00000E+00
149	4.80000E+01	1.02000E+02	0.00000E+00
150	5.80000E+01	1.02000E+02	0.00000E+00
151	6.80000E+01	1.02000E+02	0.00000E+00
152	7.70000E+01	1.02000E+02	0.00000E+00
153	8.60000E+01	1.02000E+02	0.00000E+00
154	9.40000E+01	1.02000E+02	0.00000E+00
155	1.01000E+02	1.02000E+02	0.00000E+00

========== I M A G E S 3 D ==========
= Copyright (c) 1984 Celestial Software Inc. =
==========

CHECK GEOMETRY Version 2.0 07/01/90

Node	X-Coord.	Y-Coord.	Z-Coord.
156	1.12500E+02	1.02000E+02	0.00000E+00
157	0.00000E+00	1.08000E+02	0.00000E+00
158	1.80000E+01	1.08000E+02	0.00000E+00
159	2.80000E+01	1.08000E+02	0.00000E+00
160	3.80000E+01	1.08000E+02	0.00000E+00
161	4.80000E+01	1.08000E+02	0.00000E+00
162	5.80000E+01	1.08000E+02	0.00000E+00
163	6.80000E+01	1.08000E+02	0.00000E+00
164	7.70000E+01	1.08000E+02	0.00000E+00
165	8.60000E+01	1.08000E+02	0.00000E+00
166	9.40000E+01	1.08000E+02	0.00000E+00
167	1.01000E+02	1.08000E+02	0.00000E+00
168	1.14000E+02	1.08000E+02	0.00000E+00

PLATE ELEMENT CONNECTIVITY

	Plate No.	Nodes I	J	K	L	Mat No.	Thickness	Area	Shear Web Thickness	Aspect Ratio	Plate Type
QUAD	1	1	2	14	13	1	1.200E+01	1.200E+02		1.200E+00	M+B
QUAD	2	2	3	15	14	1	1.200E+01	1.000E+02		1.000E+00	M+B
QUAD	3	3	4	16	15	1	1.200E+01	1.000E+02		1.000E+00	M+B
QUAD	4	4	5	17	16	1	1.200E+01	1.000E+02		1.000E+00	M+B
QUAD	5	5	6	18	17	1	1.200E+01	1.000E+02		1.000E+00	M+B
QUAD	6	6	7	19	18	1	1.200E+01	1.000E+02		1.000E+00	M+B
QUAD	7	7	8	20	19	1	1.200E+01	9.000E+01		9.000E-01	M+B
QUAD	8	8	9	21	20	1	1.200E+01	9.000E+01		9.000E-01	M+B
QUAD	9	9	10	22	21	1	1.200E+01	8.000E+01		8.000E-01	M+B
QUAD	10	10	11	23	22	1	1.200E+01	7.000E+01		7.000E-01	M+B
QUAD	11	11	12	24	23	1	1.200E+01	7.000E+01		7.000E-01	M+B
QUAD	12	13	14	26	25	1	1.200E+01	1.200E+02		1.200E+00	M+B
QUAD	13	14	15	27	26	1	1.200E+01	1.000E+02		1.000E+00	M+B
QUAD	14	15	16	28	27	1	1.200E+01	1.000E+02		1.000E+00	M+B
QUAD	15	16	17	29	28	1	1.200E+01	1.000E+02		1.000E+00	M+B
QUAD	16	17	18	30	29	1	1.200E+01	1.000E+02		1.000E+00	M+B
QUAD	17	18	19	31	30	1	1.200E+01	1.000E+02		1.000E+00	M+B
QUAD	18	19	20	32	31	1	1.200E+01	9.000E+01		9.000E-01	M+B
QUAD	19	20	21	33	32	1	1.200E+01	9.000E+01		9.000E-01	M+B
QUAD	20	21	22	34	33	1	1.200E+01	8.000E+01		8.000E-01	M+B
QUAD	21	22	23	35	34	1	1.200E+01	7.000E+01		7.000E-01	M+B

========== I M A G E S 3 D ==========
= Copyright (c) 1984 Celestial Software Inc. =
==========

CHECK GEOMETRY Version 2.0 07/01/90

	Plate No.	Nodes I	J	K	L	Mat No.	Thickness	Area	Shear Web Thickness	Aspect Ratio	Plate Type
QUAD	22	23	24	36	35	1	1.200E+01	7.000E+01		7.000E-01	M+B
QUAD	23	25	26	38	37	1	1.200E+01	1.200E+02		1.200E+00	M+B
QUAD	24	26	27	39	38	1	1.200E+01	1.000E+02		1.000E+00	M+B
QUAD	25	27	28	40	39	1	1.200E+01	1.000E+02		1.000E+00	M+B
QUAD	26	28	29	41	40	1	1.200E+01	1.000E+02		1.000E+00	M+B
QUAD	27	29	30	42	41	1	1.200E+01	1.000E+02		1.000E+00	M+B
QUAD	28	30	31	43	42	1	1.200E+01	1.000E+02		1.000E+00	M+B
QUAD	29	31	32	44	43	1	1.200E+01	9.000E+01		9.000E-01	M+B
QUAD	30	32	33	45	44	1	1.200E+01	9.000E+01		9.000E-01	M+B
QUAD	31	33	34	46	45	1	1.200E+01	8.000E+01		8.000E-01	M+B
QUAD	32	34	35	47	46	1	1.200E+01	7.000E+01		7.000E-01	M+B
QUAD	33	35	36	48	47	1	1.200E+01	7.000E+01		7.000E-01	M+B
QUAD	34	37	38	50	49	1	1.200E+01	1.200E+02		1.200E+00	M+B
QUAD	35	38	39	51	50	1	1.200E+01	1.000E+02		1.000E+00	M+B
QUAD	36	39	40	52	51	1	1.200E+01	1.000E+02		1.000E+00	M+B
QUAD	37	40	41	53	52	1	1.200E+01	1.000E+02		1.000E+00	M+B
QUAD	38	41	42	54	53	1	1.200E+01	1.000E+02		1.000E+00	M+B
QUAD	39	42	43	55	54	1	1.200E+01	1.000E+02		1.000E+00	M+B
QUAD	40	43	44	56	55	1	1.200E+01	9.000E+01		9.000E-01	M+B
QUAD	41	44	45	57	56	1	1.200E+01	9.000E+01		9.000E-01	M+B
QUAD	42	45	46	58	57	1	1.200E+01	8.000E+01		8.000E-01	M+B
QUAD	43	46	47	59	58	1	1.200E+01	7.000E+01		7.000E-01	M+B
QUAD	44	47	48	60	59	1	1.200E+01	7.000E+01		7.000E-01	M+B
QUAD	45	49	50	62	61	1	1.200E+01	1.200E+02		1.200E+00	M+B
QUAD	46	50	51	63	62	1	1.200E+01	1.000E+02		1.000E+00	M+B
QUAD	47	51	52	64	63	1	1.200E+01	1.000E+02		1.000E+00	M+B
QUAD	48	52	53	65	64	1	1.200E+01	1.000E+02		1.000E+00	M+B
QUAD	49	53	54	66	65	1	1.200E+01	1.000E+02		1.000E+00	M+B
QUAD	50	54	55	67	66	1	1.200E+01	1.000E+02		1.000E+00	M+B
QUAD	51	55	56	68	67	1	1.200E+01	9.000E+01		9.000E-01	M+B
QUAD	52	56	57	69	68	1	1.200E+01	9.000E+01		9.000E-01	M+B
QUAD	53	57	58	70	69	1	1.200E+01	8.000E+01		8.000E-01	M+B
QUAD	54	58	59	71	70	1	1.200E+01	7.000E+01		7.000E-01	M+B
QUAD	55	59	60	72	71	1	1.200E+01	7.000E+01		7.000E-01	M+B
QUAD	56	61	62	74	73	1	1.200E+01	1.080E+02		1.333E+00	M+B
QUAD	57	62	63	75	74	1	1.200E+01	9.000E+01		1.111E+00	M+B
QUAD	58	63	64	76	75	1	1.200E+01	9.000E+01		1.111E+00	M+B
QUAD	59	64	65	77	76	1	1.200E+01	9.000E+01		1.111E+00	M+B
QUAD	60	65	66	78	77	1	1.200E+01	9.000E+01		1.111E+00	M+B
QUAD	61	66	67	79	78	1	1.200E+01	9.000E+01		1.111E+00	M+B
QUAD	62	67	68	80	79	1	1.200E+01	8.100E+01		1.000E+00	M+B

========== I M A G E S 3 D ==========
= Copyright (c) 1984 Celestial Software Inc. =
==========

CHECK GEOMETRY Version 2.0 07/01/90

	Plate No.	Nodes I	J	K	L	Mat No.	Thickness	Area	Shear Web Thickness	Aspect Ratio	Plate Type
QUAD	63	68	69	81	80	1	1.200E+01	8.100E+01		1.000E+00	M+B
QUAD	64	69	70	82	81	1	1.200E+01	7.200E+01		8.889E-01	M+B
QUAD	65	70	71	83	82	1	1.200E+01	6.300E+01		7.778E-01	M+B
QUAD	66	71	72	84	83	1	1.200E+01	6.300E+01		7.778E-01	M+B
QUAD	67	73	74	86	85	1	1.200E+01	1.080E+02		1.333E+00	M+B
QUAD	68	74	75	87	86	1	1.200E+01	9.000E+01		1.111E+00	M+B
QUAD	69	75	76	88	87	1	1.200E+01	9.000E+01		1.111E+00	M+B
QUAD	70	76	77	89	88	1	1.200E+01	9.000E+01		1.111E+00	M+B
QUAD	71	77	78	90	89	1	1.200E+01	9.000E+01		1.111E+00	M+B
QUAD	72	78	79	91	90	1	1.200E+01	9.000E+01		1.111E+00	M+B
QUAD	73	79	80	92	91	1	1.200E+01	8.100E+01		1.000E+00	M+B
QUAD	74	80	81	93	92	1	1.200E+01	8.100E+01		1.000E+00	M+B
QUAD	75	81	82	94	93	1	1.200E+01	7.200E+01		8.889E-01	M+B
QUAD	76	82	83	95	94	1	1.200E+01	6.300E+01		7.778E-01	M+B
QUAD	77	83	84	96	95	1	1.200E+01	6.300E+01		7.778E-01	M+B
QUAD	78	85	86	98	97	1	1.200E+01	9.600E+01		1.500E+00	M+B
QUAD	79	86	87	99	98	1	1.200E+01	8.000E+01		1.250E+00	M+B
QUAD	80	87	88	100	99	1	1.200E+01	8.000E+01		1.250E+00	M+B
QUAD	81	88	89	101	100	1	1.200E+01	8.000E+01		1.250E+00	M+B
QUAD	82	89	90	102	101	1	1.200E+01	8.000E+01		1.250E+00	M+B
QUAD	83	90	91	103	102	1	1.200E+01	8.000E+01		1.250E+00	M+B
QUAD	84	91	92	104	103	1	1.200E+01	7.200E+01		1.125E+00	M+B
QUAD	85	92	93	105	104	1	1.200E+01	7.200E+01		1.125E+00	M+B
QUAD	86	93	94	106	105	1	1.200E+01	6.400E+01		1.000E+00	M+B
QUAD	87	94	95	107	106	1	1.200E+01	5.600E+01		8.750E-01	M+B
QUAD	88	95	96	108	107	1	1.200E+01	5.600E+01		8.750E-01	M+B
QUAD	89	97	98	110	109	1	1.200E+01	9.600E+01		1.500E+00	M+B
QUAD	90	98	99	111	110	1	1.200E+01	8.000E+01		1.250E+00	M+B
QUAD	91	99	100	112	111	1	1.200E+01	8.000E+01		1.250E+00	M+B
QUAD	92	100	101	113	112	1	1.200E+01	8.000E+01		1.250E+00	M+B
QUAD	93	101	102	114	113	1	1.200E+01	8.000E+01		1.250E+00	M+B
QUAD	94	102	103	115	114	1	1.200E+01	8.000E+01		1.250E+00	M+B
QUAD	95	103	104	116	115	1	1.200E+01	7.200E+01		1.125E+00	M+B
QUAD	96	104	105	117	116	1	1.200E+01	7.200E+01		1.125E+00	M+B
QUAD	97	105	106	118	117	1	1.200E+01	6.400E+01		1.000E+00	M+B
QUAD	98	106	107	119	118	1	1.200E+01	5.600E+01		8.750E-01	M+B
QUAD	99	107	108	120	119	1	1.200E+01	5.600E+01		8.750E-01	M+B
QUAD	100	109	110	122	121	2	7.630E+00	7.650E+01		2.109E+00	M+B
QUAD	101	110	111	123	122	2	7.630E+00	6.000E+01		1.667E+00	M+B
QUAD	102	111	112	124	123	2	7.630E+00	6.000E+01		1.667E+00	M+B
QUAD	103	112	113	125	124	2	7.630E+00	6.000E+01		1.667E+00	M+B

========== I M A G E S 3 D ==========
= Copyright (c) 1984 Celestial Software Inc. =
==========

CHECK GEOMETRY Version 2.0 07/01/90

	Plate No.	Nodes I	J	K	L	Mat No.	Thickness	Area	Shear Web Thickness	Aspect Ratio	Plate Type
QUAD	104	113	114	126	125	2	7.630E+00	6.000E+01		1.667E+00	M+B
QUAD	105	114	115	127	126	2	7.630E+00	6.000E+01		1.667E+00	M+B
QUAD	106	115	116	128	127	2	7.630E+00	5.400E+01		1.500E+00	M+B
QUAD	107	116	117	129	128	2	7.630E+00	5.400E+01		1.500E+00	M+B
QUAD	108	117	118	130	129	2	7.630E+00	4.800E+01		1.333E+00	M+B
QUAD	109	118	119	131	130	2	7.630E+00	4.200E+01		1.167E+00	M+B
QUAD	110	119	120	132	131	2	7.630E+00	4.650E+01		1.282E+00	M+B
QUAD	111	121	122	134	133	2	7.630E+00	8.550E+01		2.357E+00	M+B
QUAD	112	122	123	135	134	2	7.630E+00	6.000E+01		1.667E+00	M+B
QUAD	113	123	124	136	135	2	7.630E+00	6.000E+01		1.667E+00	M+B
QUAD	114	124	125	137	136	2	7.630E+00	6.000E+01		1.667E+00	M+B
QUAD	115	125	126	138	137	2	7.630E+00	6.000E+01		1.667E+00	M+B
QUAD	116	126	127	139	138	2	7.630E+00	6.000E+01		1.667E+00	M+B
QUAD	117	127	128	140	139	2	7.630E+00	5.400E+01		1.500E+00	M+B
QUAD	118	128	129	141	140	2	7.630E+00	5.400E+01		1.500E+00	M+B
QUAD	119	129	130	142	141	2	7.630E+00	4.800E+01		1.333E+00	M+B
QUAD	120	130	131	143	142	2	7.630E+00	4.200E+01		1.167E+00	M+B
QUAD	121	131	132	144	143	2	7.630E+00	5.550E+01		1.530E+00	M+B
QUAD	122	133	134	146	145	2	7.630E+00	9.450E+01		2.605E+00	M+B
QUAD	123	134	135	147	146	2	7.630E+00	6.000E+01		1.667E+00	M+B
QUAD	124	135	136	148	147	2	7.630E+00	6.000E+01		1.667E+00	M+B
QUAD	125	136	137	149	148	2	7.630E+00	6.000E+01		1.667E+00	M+B
QUAD	126	137	138	150	149	2	7.630E+00	6.000E+01		1.667E+00	M+B
QUAD	127	138	139	151	150	2	7.630E+00	6.000E+01		1.667E+00	M+B
QUAD	128	139	140	152	151	2	7.630E+00	5.400E+01		1.500E+00	M+B
QUAD	129	140	141	153	152	2	7.630E+00	5.400E+01		1.500E+00	M+B
QUAD	130	141	142	154	153	2	7.630E+00	4.800E+01		1.333E+00	M+B
QUAD	131	142	143	155	154	2	7.630E+00	4.200E+01		1.167E+00	M+B
QUAD	132	143	144	156	155	2	7.630E+00	6.450E+01		1.778E+00	M+B
QUAD	133	145	146	158	157	2	7.630E+00	1.035E+02		2.853E+00	M+B
QUAD	134	146	147	159	158	2	7.630E+00	6.000E+01		1.667E+00	M+B
QUAD	135	147	148	160	159	2	7.630E+00	6.000E+01		1.667E+00	M+B
QUAD	136	148	149	161	160	2	7.630E+00	6.000E+01		1.667E+00	M+B
QUAD	137	149	150	162	161	2	7.630E+00	6.000E+01		1.667E+00	M+B
QUAD	138	150	151	163	162	2	7.630E+00	6.000E+01		1.667E+00	M+B
QUAD	139	151	152	164	163	2	7.630E+00	5.400E+01		1.500E+00	M+B
QUAD	140	152	153	165	164	2	7.630E+00	5.400E+01		1.500E+00	M+B
QUAD	141	153	154	166	165	2	7.630E+00	4.800E+01		1.333E+00	M+B
QUAD	142	154	155	167	166	2	7.630E+00	4.200E+01		1.167E+00	M+B
QUAD	143	155	156	168	167	2	7.630E+00	7.350E+01		2.026E+00	M+B

========== I M A G E S 3 D ==========
= Copyright (c) 1984 Celestial Software Inc. =
==========

CHECK GEOMETRY Version 2.0 07/01/90

RESTRAINTS

Node No	Global/Local	Restraint Directions
1	GLOBAL	X Y Z RX RY RZ
2	GLOBAL	X Y Z RX RY RZ
3	GLOBAL	X Y Z RX RY RZ
4	GLOBAL	X Y Z RX RY RZ
5	GLOBAL	X Y Z RX RY RZ
6	GLOBAL	X Y Z RX RY RZ
7	GLOBAL	X Y Z RX RY RZ
8	GLOBAL	X Y Z RX RY RZ
9	GLOBAL	X Y Z RX RY RZ
10	GLOBAL	X Y Z RX RY RZ
11	GLOBAL	X Y Z RX RY RZ
12	GLOBAL	X Y Z RX RY RZ
13	GLOBAL	X Y Z RX RY RZ
24	GLOBAL	X Y Z RX RY RZ
25	GLOBAL	X Y Z RX RY RZ
36	GLOBAL	X Y Z RX RY RZ
37	GLOBAL	X Y Z RX RY RZ
48	GLOBAL	X Y Z RX RY RZ
49	GLOBAL	X Y Z RX RY RZ
60	GLOBAL	X Y Z RX RY RZ
61	GLOBAL	X Y Z RX RY RZ
72	GLOBAL	X Y Z RX RY RZ
73	GLOBAL	X Y Z RX RY RZ
84	GLOBAL	X Y Z RX RY RZ
85	GLOBAL	X Y Z RX RY RZ
96	GLOBAL	X Y Z RX RY RZ
97	GLOBAL	X Y Z RX RY RZ
108	GLOBAL	X Y Z RX RY RZ
109	GLOBAL	X Y Z RX RY RZ
120	GLOBAL	X Y Z RX RY RZ
121	GLOBAL	X Y Z RX RY RZ
132	GLOBAL	X Y Z RX RY RZ
133	GLOBAL	X Y Z RX RY RZ
144	GLOBAL	X Y Z RX RY RZ
145	GLOBAL	X Y Z RX RY RZ
156	GLOBAL	X Y Z RX RY RZ
157	GLOBAL	X Y Z RX RY RZ
168	GLOBAL	X Y Z RX RY RZ

```
=============== I M A G E S  3 D ===============
= Copyright (c) 1984   Celestial Software Inc. =
================================================
```

SOLVE DISPLACEMENTS Version 2.0 07/01/90

L O A D C A S E 1

SELF WEIGHT

GRAVITY LOADING

Direction	Gravity Factor	Load Factor
X	.0000E+00	.1000E+01
Y	.0000E+00	.1000E+01
Z	.2000E+00	.1000E+01

INERTIA LOADING

Direction	Translational Accel.	Rotational Accel.	Rotational Velocity	Origin
X	.0000E+00	.0000E+00	.0000E+00	.0000E+00
Y	.0000E+00	.0000E+00	.0000E+00	.0000E+00
Z	.0000E+00	.0000E+00	.0000E+00	.0000E+00

Gravity Acceleration = .3864E+03

REFERENCE TEMPERATURE = .0000E+00

========== I M A G E S 3 D ==========
= Copyright (c) 1984 Celestial Software Inc. =
==========

SOLVE DISPLACEMENTS Version 2.0 07/01/90

L O A D C A S E 2

SEISMIC SOIL PRESSURE

GRAVITY LOADING

Direction	Gravity Factor	Load Factor
X	.0000E+00	.1000E+01
Y	.0000E+00	.1000E+01
Z	.0000E+00	.1000E+01

INERTIA LOADING

Direction	Translational Accel.	Rotational Accel.	Rotational Velocity	Origin
X	.0000E+00	.0000E+00	.0000E+00	.0000E+00
Y	.0000E+00	.0000E+00	.0000E+00	.0000E+00
Z	.0000E+00	.0000E+00	.0000E+00	.0000E+00

Gravity Acceleration = .3864E+03

REFERENCE TEMPERATURE = .0000E+00

PLATE TEMPERATURES/PRESSURES

Plate/Temp Plate/Pressure Plate/Lat. load	Node1 Node1 Side	Node2 Node2 Dir.	Node3 Node3 Node1	Node4 Node4 Node2
1	.0000E+00	.0000E+00	.0000E+00	.0000E+00
	.0000E+00	.0000E+00	.2656E+00	.2656E+00
2	.0000E+00	.0000E+00	.0000E+00	.0000E+00
	.0000E+00	.0000E+00	.2656E+00	.2656E+00
3	.0000E+00	.0000E+00	.0000E+00	.0000E+00
	.0000E+00	.0000E+00	.2656E+00	.2656E+00
4	.0000E+00	.0000E+00	.0000E+00	.0000E+00
	.0000E+00	.0000E+00	.2656E+00	.2656E+00
5	.0000E+00	.0000E+00	.0000E+00	.0000E+00
	.0000E+00	.0000E+00	.2656E+00	.2656E+00
6	.0000E+00	.0000E+00	.0000E+00	.0000E+00
	.0000E+00	.0000E+00	.2656E+00	.2656E+00

========== I M A G E S 3 D ==========
= Copyright (c) 1984 Celestial Software Inc. =
==========

SOLVE DISPLACEMENTS Version 2.0 07/01/90

L O A D C A S E 2

SEISMIC SOIL PRESSURE

Plate/Temp Plate/Pressure Plate/Lat. load	Node1 Node1 Side	Node2 Node2 Dir.	Node3 Node3 Node1	Node4 Node4 Node2
7	.0000E+00	.0000E+00	.0000E+00	.0000E+00
	.0000E+00	.0000E+00	.2656E+00	.2656E+00
8	.0000E+00	.0000E+00	.0000E+00	.0000E+00
	.0000E+00	.0000E+00	.2656E+00	.2656E+00
9	.0000E+00	.0000E+00	.0000E+00	.0000E+00
	.0000E+00	.0000E+00	.2656E+00	.2656E+00
10	.0000E+00	.0000E+00	.0000E+00	.0000E+00
	.0000E+00	.0000E+00	.2656E+00	.2656E+00
11	.0000E+00	.0000E+00	.0000E+00	.0000E+00
	.0000E+00	.0000E+00	.2656E+00	.2656E+00
12	.0000E+00	.0000E+00	.0000E+00	.0000E+00
	.2656E+00	.2656E+00	.5313E+00	.5313E+00
13	.0000E+00	.0000E+00	.0000E+00	.0000E+00
	.2656E+00	.2656E+00	.5313E+00	.5313E+00
14	.0000E+00	.0000E+00	.0000E+00	.0000E+00
	.2656E+00	.2656E+00	.5313E+00	.5313E+00
15	.0000E+00	.0000E+00	.0000E+00	.0000E+00
	.2656E+00	.2656E+00	.5313E+00	.5313E+00
16	.0000E+00	.0000E+00	.0000E+00	.0000E+00
	.2656E+00	.2656E+00	.5313E+00	.5313E+00
17	.0000E+00	.0000E+00	.0000E+00	.0000E+00
	.2656E+00	.2656E+00	.5313E+00	.5313E+00
18	.0000E+00	.0000E+00	.0000E+00	.0000E+00
	.2656E+00	.2656E+00	.5313E+00	.5313E+00
19	.0000E+00	.0000E+00	.0000E+00	.0000E+00
	.2656E+00	.2656E+00	.5313E+00	.5313E+00
20	.0000E+00	.0000E+00	.0000E+00	.0000E+00
	.2656E+00	.2656E+00	.5313E+00	.5313E+00
21	.0000E+00	.0000E+00	.0000E+00	.0000E+00
	.2656E+00	.2656E+00	.5313E+00	.5313E+00
22	.0000E+00	.0000E+00	.0000E+00	.0000E+00
	.2656E+00	.2656E+00	.5313E+00	.5313E+00
23	.0000E+00	.0000E+00	.0000E+00	.0000E+00
	.5313E+00	.5313E+00	.7969E+00	.7969E+00
24	.0000E+00	.0000E+00	.0000E+00	.0000E+00
	.5313E+00	.5313E+00	.7969E+00	.7969E+00
25	.0000E+00	.0000E+00	.0000E+00	.0000E+00
	.5313E+00	.5313E+00	.7969E+00	.7969E+00
26	.0000E+00	.0000E+00	.0000E+00	.0000E+00
	.5313E+00	.5313E+00	.7969E+00	.7969E+00

========== I M A G E S 3 D ==========
= Copyright (c) 1984 Celestial Software Inc. =
==========

SOLVE DISPLACEMENTS Version 2.0 07/01/90

L O A D C A S E 2

SEISMIC SOIL PRESSURE

Plate/Temp Plate/Pressure Plate/Lat. load	Node1 Node1 Side	Node2 Node2 Dir.	Node3 Node3 Node1	Node4 Node4 Node2
27	.0000E+00	.0000E+00	.0000E+00	.0000E+00
	.5313E+00	.5313E+00	.7969E+00	.7969E+00
28	.0000E+00	.0000E+00	.0000E+00	.0000E+00
	.5313E+00	.5313E+00	.7969E+00	.7969E+00
29	.0000E+00	.0000E+00	.0000E+00	.0000E+00
	.5313E+00	.5313E+00	.7969E+00	.7969E+00
30	.0000E+00	.0000E+00	.0000E+00	.0000E+00
	.5313E+00	.5313E+00	.7969E+00	.7969E+00
31	.0000E+00	.0000E+00	.0000E+00	.0000E+00
	.5313E+00	.5313E+00	.7969E+00	.7969E+00
32	.0000E+00	.0000E+00	.0000E+00	.0000E+00
	.5313E+00	.5313E+00	.7969E+00	.7969E+00
33	.0000E+00	.0000E+00	.0000E+00	.0000E+00
	.5313E+00	.5313E+00	.7969E+00	.7969E+00
34	.0000E+00	.0000E+00	.0000E+00	.0000E+00
	.7969E+00	.7969E+00	.1063E+01	.1063E+01
35	.0000E+00	.0000E+00	.0000E+00	.0000E+00
	.7969E+00	.7969E+00	.1063E+01	.1063E+01
36	.0000E+00	.0000E+00	.0000E+00	.0000E+00
	.7969E+00	.7969E+00	.1063E+01	.1063E+01
37	.0000E+00	.0000E+00	.0000E+00	.0000E+00
	.7969E+00	.7969E+00	.1063E+01	.1063E+01
38	.0000E+00	.0000E+00	.0000E+00	.0000E+00
	.7969E+00	.7969E+00	.1063E+01	.1063E+01
39	.0000E+00	.0000E+00	.0000E+00	.0000E+00
	.7969E+00	.7969E+00	.1063E+01	.1063E+01
40	.0000E+00	.0000E+00	.0000E+00	.0000E+00
	.7969E+00	.7969E+00	.1063E+01	.1063E+01
41	.0000E+00	.0000E+00	.0000E+00	.0000E+00
	.7969E+00	.7969E+00	.1063E+01	.1063E+01
42	.0000E+00	.0000E+00	.0000E+00	.0000E+00
	.7969E+00	.7969E+00	.1063E+01	.1063E+01
43	.0000E+00	.0000E+00	.0000E+00	.0000E+00
	.7969E+00	.7969E+00	.1063E+01	.1063E+01
44	.0000E+00	.0000E+00	.0000E+00	.0000E+00
	.7969E+00	.7969E+00	.1063E+01	.1063E+01
45	.0000E+00	.0000E+00	.0000E+00	.0000E+00
	.1063E+01	.1063E+01	.1328E+01	.1328E+01
46	.0000E+00	.0000E+00	.0000E+00	.0000E+00
	.1063E+01	.1063E+01	.1328E+01	.1328E+01

========== I M A G E S 3 D ==========
= Copyright (c) 1984 Celestial Software Inc. =
==========

SOLVE DISPLACEMENTS Version 2.0 07/01/90

L O A D C A S E 2

SEISMIC SOIL PRESSURE

Plate/Temp Plate/Pressure Plate/Lat. load	Node1 Node1 Side	Node2 Node2 Dir.	Node3 Node3 Node1	Node4 Node4 Node2
47	.0000E+00	.0000E+00	.0000E+00	.0000E+00
	.1063E+01	.1063E+01	.1328E+01	.1328E+01
48	.0000E+00	.0000E+00	.0000E+00	.0000E+00
	.1063E+01	.1063E+01	.1328E+01	.1328E+01
49	.0000E+00	.0000E+00	.0000E+00	.0000E+00
	.1063E+01	.1063E+01	.1328E+01	.1328E+01
50	.0000E+00	.0000E+00	.0000E+00	.0000E+00
	.1063E+01	.1063E+01	.1328E+01	.1328E+01
51	.0000E+00	.0000E+00	.0000E+00	.0000E+00
	.1063E+01	.1063E+01	.1328E+01	.1328E+01
52	.0000E+00	.0000E+00	.0000E+00	.0000E+00
	.1063E+01	.1063E+01	.1328E+01	.1328E+01
53	.0000E+00	.0000E+00	.0000E+00	.0000E+00
	.1063E+01	.1063E+01	.1328E+01	.1328E+01
54	.0000E+00	.0000E+00	.0000E+00	.0000E+00
	.1063E+01	.1063E+01	.1328E+01	.1328E+01
55	.0000E+00	.0000E+00	.0000E+00	.0000E+00
	.1063E+01	.1063E+01	.1328E+01	.1328E+01
56	.0000E+00	.0000E+00	.0000E+00	.0000E+00
	.1328E+01	.1328E+01	.1567E+01	.1567E+01
57	.0000E+00	.0000E+00	.0000E+00	.0000E+00
	.1328E+01	.1328E+01	.1567E+01	.1567E+01
58	.0000E+00	.0000E+00	.0000E+00	.0000E+00
	.1328E+01	.1328E+01	.1567E+01	.1567E+01
59	.0000E+00	.0000E+00	.0000E+00	.0000E+00
	.1328E+01	.1328E+01	.1567E+01	.1567E+01
60	.0000E+00	.0000E+00	.0000E+00	.0000E+00
	.1328E+01	.1328E+01	.1567E+01	.1567E+01
61	.0000E+00	.0000E+00	.0000E+00	.0000E+00
	.1328E+01	.1328E+01	.1567E+01	.1567E+01
62	.0000E+00	.0000E+00	.0000E+00	.0000E+00
	.1328E+01	.1328E+01	.1567E+01	.1567E+01
63	.0000E+00	.0000E+00	.0000E+00	.0000E+00
	.1328E+01	.1328E+01	.1567E+01	.1567E+01
64	.0000E+00	.0000E+00	.0000E+00	.0000E+00
	.1328E+01	.1328E+01	.1567E+01	.1567E+01
65	.0000E+00	.0000E+00	.0000E+00	.0000E+00
	.1328E+01	.1328E+01	.1567E+01	.1567E+01
66	.0000E+00	.0000E+00	.0000E+00	.0000E+00
	.1328E+01	.1328E+01	.1567E+01	.1567E+01

========== I M A G E S 3 D ==========
= Copyright (c) 1984 Celestial Software Inc. =
==========

SOLVE DISPLACEMENTS Version 2.0 07/01/90

L O A D C A S E 2

SEISMIC SOIL PRESSURE

Plate/Temp Plate/Pressure Plate/Lat. load	Node1 Node1 Side	Node2 Node2 Dir.	Node3 Node3 Node1	Node4 Node4 Node2
67	.0000E+00	.0000E+00	.0000E+00	.0000E+00
	.1567E+01	.1567E+01	.1806E+01	.1806E+01
68	.0000E+00	.0000E+00	.0000E+00	.0000E+00
	.1567E+01	.1567E+01	.1806E+01	.1806E+01
69	.0000E+00	.0000E+00	.0000E+00	.0000E+00
	.1567E+01	.1567E+01	.1806E+01	.1806E+01
70	.0000E+00	.0000E+00	.0000E+00	.0000E+00
	.1567E+01	.1567E+01	.1806E+01	.1806E+01
71	.0000E+00	.0000E+00	.0000E+00	.0000E+00
	.1567E+01	.1567E+01	.1806E+01	.1806E+01
72	.0000E+00	.0000E+00	.0000E+00	.0000E+00
	.1567E+01	.1567E+01	.1806E+01	.1806E+01
73	.0000E+00	.0000E+00	.0000E+00	.0000E+00
	.1567E+01	.1567E+01	.1806E+01	.1806E+01
74	.0000E+00	.0000E+00	.0000E+00	.0000E+00
	.1567E+01	.1567E+01	.1806E+01	.1806E+01
75	.0000E+00	.0000E+00	.0000E+00	.0000E+00
	.1567E+01	.1567E+01	.1806E+01	.1806E+01
76	.0000E+00	.0000E+00	.0000E+00	.0000E+00
	.1567E+01	.1567E+01	.1806E+01	.1806E+01
77	.0000E+00	.0000E+00	.0000E+00	.0000E+00
	.1567E+01	.1567E+01	.1806E+01	.1806E+01
78	.0000E+00	.0000E+00	.0000E+00	.0000E+00
	.1806E+01	.1806E+01	.2019E+01	.2019E+01
79	.0000E+00	.0000E+00	.0000E+00	.0000E+00
	.1806E+01	.1806E+01	.2019E+01	.2019E+01
80	.0000E+00	.0000E+00	.0000E+00	.0000E+00
	.1806E+01	.1806E+01	.2019E+01	.2019E+01
81	.0000E+00	.0000E+00	.0000E+00	.0000E+00
	.1806E+01	.1806E+01	.2019E+01	.2019E+01
82	.0000E+00	.0000E+00	.0000E+00	.0000E+00
	.1806E+01	.1806E+01	.2019E+01	.2019E+01
83	.0000E+00	.0000E+00	.0000E+00	.0000E+00
	.1806E+01	.1806E+01	.2019E+01	.2019E+01
84	.0000E+00	.0000E+00	.0000E+00	.0000E+00
	.1806E+01	.1806E+01	.2019E+01	.2019E+01
85	.0000E+00	.0000E+00	.0000E+00	.0000E+00
	.1806E+01	.1806E+01	.2019E+01	.2019E+01
86	.0000E+00	.0000E+00	.0000E+00	.0000E+00
	.1806E+01	.1806E+01	.2019E+01	.2019E+01

========== I M A G E S 3 D ==========
= Copyright (c) 1984 Celestial Software Inc. =
==========

SOLVE DISPLACEMENTS Version 2.0 07/01/90

L O A D C A S E 2

SEISMIC SOIL PRESSURE

Plate/Temp Plate/Pressure Plate/Lat. load	Node1 Node1 Side	Node2 Node2 Dir.	Node3 Node3 Node1	Node4 Node4 Node2
87	.0000E+00	.0000E+00	.0000E+00	.0000E+00
	.1806E+01	.1806E+01	.2019E+01	.2019E+01
88	.0000E+00	.0000E+00	.0000E+00	.0000E+00
	.1806E+01	.1806E+01	.2019E+01	.2019E+01
89	.0000E+00	.0000E+00	.0000E+00	.0000E+00
	.2019E+01	.2019E+01	.2231E+01	.2231E+01
90	.0000E+00	.0000E+00	.0000E+00	.0000E+00
	.2019E+01	.2019E+01	.2231E+01	.2231E+01
91	.0000E+00	.0000E+00	.0000E+00	.0000E+00
	.2019E+01	.2019E+01	.2231E+01	.2231E+01
92	.0000E+00	.0000E+00	.0000E+00	.0000E+00
	.2019E+01	.2019E+01	.2231E+01	.2231E+01
93	.0000E+00	.0000E+00	.0000E+00	.0000E+00
	.2019E+01	.2019E+01	.2231E+01	.2231E+01
94	.0000E+00	.0000E+00	.0000E+00	.0000E+00
	.2019E+01	.2019E+01	.2231E+01	.2231E+01
95	.0000E+00	.0000E+00	.0000E+00	.0000E+00
	.2019E+01	.2019E+01	.2231E+01	.2231E+01
96	.0000E+00	.0000E+00	.0000E+00	.0000E+00
	.2019E+01	.2019E+01	.2231E+01	.2231E+01
97	.0000E+00	.0000E+00	.0000E+00	.0000E+00
	.2019E+01	.2019E+01	.2231E+01	.2231E+01
98	.0000E+00	.0000E+00	.0000E+00	.0000E+00
	.2019E+01	.2019E+01	.2231E+01	.2231E+01
99	.0000E+00	.0000E+00	.0000E+00	.0000E+00
	.2019E+01	.2019E+01	.2231E+01	.2231E+01
100	.0000E+00	.0000E+00	.0000E+00	.0000E+00
	.2231E+01	.2231E+01	.2391E+01	.2391E+01
101	.0000E+00	.0000E+00	.0000E+00	.0000E+00
	.2231E+01	.2231E+01	.2391E+01	.2391E+01
102	.0000E+00	.0000E+00	.0000E+00	.0000E+00
	.2231E+01	.2231E+01	.2391E+01	.2391E+01
103	.0000E+00	.0000E+00	.0000E+00	.0000E+00
	.2231E+01	.2231E+01	.2391E+01	.2391E+01
104	.0000E+00	.0000E+00	.0000E+00	.0000E+00
	.2231E+01	.2231E+01	.2391E+01	.2391E+01
105	.0000E+00	.0000E+00	.0000E+00	.0000E+00
	.2231E+01	.2231E+01	.2391E+01	.2391E+01
106	.0000E+00	.0000E+00	.0000E+00	.0000E+00
	.2231E+01	.2231E+01	.2391E+01	.2391E+01

```
============== I M A G E S  3 D ==============
= Copyright (c) 1984   Celestial Software Inc. =
===============================================
```

SOLVE DISPLACEMENTS Version 2.0 07/01/90

L O A D C A S E 2

SEISMIC SOIL PRESSURE

Plate/Temp Plate/Pressure Plate/Lat. load	Node1 Node1 Side	Node2 Node2 Dir.	Node3 Node3 Node1	Node4 Node4 Node2
107	.0000E+00	.0000E+00	.0000E+00	.0000E+00
	.2231E+01	.2231E+01	.2391E+01	.2391E+01
108	.0000E+00	.0000E+00	.0000E+00	.0000E+00
	.2231E+01	.2231E+01	.2391E+01	.2391E+01
109	.0000E+00	.0000E+00	.0000E+00	.0000E+00
	.2231E+01	.2231E+01	.2391E+01	.2391E+01
110	.0000E+00	.0000E+00	.0000E+00	.0000E+00
	.2231E+01	.2231E+01	.2391E+01	.2391E+01
111	.0000E+00	.0000E+00	.0000E+00	.0000E+00
	.2391E+01	.2391E+01	.2550E+01	.2550E+01
112	.0000E+00	.0000E+00	.0000E+00	.0000E+00
	.2391E+01	.2391E+01	.2550E+01	.2550E+01
113	.0000E+00	.0000E+00	.0000E+00	.0000E+00
	.2391E+01	.2391E+01	.2550E+01	.2550E+01
114	.0000E+00	.0000E+00	.0000E+00	.0000E+00
	.2391E+01	.2391E+01	.2550E+01	.2550E+01
115	.0000E+00	.0000E+00	.0000E+00	.0000E+00
	.2391E+01	.2391E+01	.2550E+01	.2550E+01
116	.0000E+00	.0000E+00	.0000E+00	.0000E+00
	.2391E+01	.2391E+01	.2550E+01	.2550E+01
117	.0000E+00	.0000E+00	.0000E+00	.0000E+00
	.2391E+01	.2391E+01	.2550E+01	.2550E+01
118	.0000E+00	.0000E+00	.0000E+00	.0000E+00
	.2391E+01	.2391E+01	.2550E+01	.2550E+01
119	.0000E+00	.0000E+00	.0000E+00	.0000E+00
	.2391E+01	.2391E+01	.2550E+01	.2550E+01
120	.0000E+00	.0000E+00	.0000E+00	.0000E+00
	.2391E+01	.2391E+01	.2550E+01	.2550E+01
121	.0000E+00	.0000E+00	.0000E+00	.0000E+00
	.2391E+01	.2391E+01	.2550E+01	.2550E+01

```
============== I M A G E S  3 D ==============
= Copyright (c) 1984   Celestial Software Inc. =
===============================================
```

SOLVE DISPLACEMENTS Version 2.0 07/01/90

L O A D C A S E 3

LATERAL EARTH PRESSURE

GRAVITY LOADING

Direction	Gravity Factor	Load Factor
X	.0000E+00	.1000E+01
Y	.0000E+00	.1000E+01
Z	.0000E+00	.1000E+01

INERTIA LOADING

Direction	Translational Accel.	Rotational Accel.	Rotational Velocity	Origin
X	.0000E+00	.0000E+00	.0000E+00	.0000E+00
Y	.0000E+00	.0000E+00	.0000E+00	.0000E+00
Z	.0000E+00	.0000E+00	.0000E+00	.0000E+00

Gravity Acceleration = .3864E+03

REFERENCE TEMPERATURE = .0000E+00

PLATE TEMPERATURES/PRESSURES

Plate/Temp Plate/Pressure Plate/Lat. load	Node1 Node1 Side	Node2 Node2 Dir.	Node3 Node3 Node1	Node4 Node4 Node2
1	.0000E+00	.0000E+00	.0000E+00	.0000E+00
	.1610E+01	.1610E+01	.1442E+01	.1442E+01
2	.0000E+00	.0000E+00	.0000E+00	.0000E+00
	.1610E+01	.1610E+01	.1442E+01	.1442E+01
3	.0000E+00	.0000E+00	.0000E+00	.0000E+00
	.1610E+01	.1610E+01	.1442E+01	.1442E+01
4	.0000E+00	.0000E+00	.0000E+00	.0000E+00
	.1610E+01	.1610E+01	.1442E+01	.1442E+01
5	.0000E+00	.0000E+00	.0000E+00	.0000E+00
	.1610E+01	.1610E+01	.1442E+01	.1442E+01
6	.0000E+00	.0000E+00	.0000E+00	.0000E+00
	.1610E+01	.1610E+01	.1442E+01	.1442E+01

```
============== I M A G E S  3 D ===============
= Copyright (c) 1984   Celestial Software Inc. =
================================================
```

SOLVE DISPLACEMENTS Version 2.0 07/01/90

L O A D C A S E 3

LATERAL EARTH PRESSURE

Plate/Temp Plate/Pressure Plate/Lat. load	Nodel Nodel Side	Node2 Node2 Dir.	Node3 Node3 Nodel	Node4 Node4 Node2
7	.0000E+00	.0000E+00	.0000E+00	.0000E+00
	.1610E+01	.1610E+01	.1442E+01	.1442E+01
8	.0000E+00	.0000E+00	.0000E+00	.0000E+00
	.1610E+01	.1610E+01	.1442E+01	.1442E+01
9	.0000E+00	.0000E+00	.0000E+00	.0000E+00
	.1610E+01	.1610E+01	.1442E+01	.1442E+01
10	.0000E+00	.0000E+00	.0000E+00	.0000E+00
	.1610E+01	.1610E+01	.1442E+01	.1442E+01
11	.0000E+00	.0000E+00	.0000E+00	.0000E+00
	.1610E+01	.1610E+01	.1442E+01	.1442E+01
12	.0000E+00	.0000E+00	.0000E+00	.0000E+00
	.1442E+01	.1442E+01	.1275E+01	.1275E+01
13	.0000E+00	.0000E+00	.0000E+00	.0000E+00
	.1442E+01	.1442E+01	.1275E+01	.1275E+01
14	.0000E+00	.0000E+00	.0000E+00	.0000E+00
	.1442E+01	.1442E+01	.1275E+01	.1275E+01
15	.0000E+00	.0000E+00	.0000E+00	.0000E+00
	.1442E+01	.1442E+01	.1275E+01	.1275E+01
16	.0000E+00	.0000E+00	.0000E+00	.0000E+00
	.1442E+01	.1442E+01	.1275E+01	.1275E+01
17	.0000E+00	.0000E+00	.0000E+00	.0000E+00
	.1442E+01	.1442E+01	.1275E+01	.1275E+01
18	.0000E+00	.0000E+00	.0000E+00	.0000E+00
	.1442E+01	.1442E+01	.1275E+01	.1275E+01
19	.0000E+00	.0000E+00	.0000E+00	.0000E+00
	.1442E+01	.1442E+01	.1275E+01	.1275E+01
20	.0000E+00	.0000E+00	.0000E+00	.0000E+00
	.1442E+01	.1442E+01	.1275E+01	.1275E+01
21	.0000E+00	.0000E+00	.0000E+00	.0000E+00
	.1442E+01	.1442E+01	.1275E+01	.1275E+01
22	.0000E+00	.0000E+00	.0000E+00	.0000E+00
	.1442E+01	.1442E+01	.1275E+01	.1275E+01
23	.0000E+00	.0000E+00	.0000E+00	.0000E+00
	.1275E+01	.1275E+01	.1107E+01	.1107E+01
24	.0000E+00	.0000E+00	.0000E+00	.0000E+00
	.1275E+01	.1275E+01	.1107E+01	.1107E+01
25	.0000E+00	.0000E+00	.0000E+00	.0000E+00
	.1275E+01	.1275E+01	.1107E+01	.1107E+01
26	.0000E+00	.0000E+00	.0000E+00	.0000E+00
	.1275E+01	.1275E+01	.1107E+01	.1107E+01

```
============== I M A G E S  3 D ==============
= Copyright (c) 1984   Celestial Software Inc. =
===============================================
```

SOLVE DISPLACEMENTS Version 2.0 07/01/90

L O A D C A S E 3

LATERAL EARTH PRESSURE

Plate/Temp Plate/Pressure Plate/Lat. load	Node1 Node1 Side	Node2 Node2 Dir.	Node3 Node3 Node1	Node4 Node4 Node2
27	.0000E+00	.0000E+00	.0000E+00	.0000E+00
	.1275E+01	.1275E+01	.1107E+01	.1107E+01
28	.0000E+00	.0000E+00	.0000E+00	.0000E+00
	.1275E+01	.1275E+01	.1107E+01	.1107E+01
29	.0000E+00	.0000E+00	.0000E+00	.0000E+00
	.1275E+01	.1275E+01	.1107E+01	.1107E+01
30	.0000E+00	.0000E+00	.0000E+00	.0000E+00
	.1275E+01	.1275E+01	.1107E+01	.1107E+01
31	.0000E+00	.0000E+00	.0000E+00	.0000E+00
	.1275E+01	.1275E+01	.1107E+01	.1107E+01
32	.0000E+00	.0000E+00	.0000E+00	.0000E+00
	.1275E+01	.1275E+01	.1107E+01	.1107E+01
33	.0000E+00	.0000E+00	.0000E+00	.0000E+00
	.1275E+01	.1275E+01	.1107E+01	.1107E+01
34	.0000E+00	.0000E+00	.0000E+00	.0000E+00
	.1107E+01	.1107E+01	.9392E+00	.9392E+00
35	.0000E+00	.0000E+00	.0000E+00	.0000E+00
	.1107E+01	.1107E+01	.9392E+00	.9392E+00
36	.0000E+00	.0000E+00	.0000E+00	.0000E+00
	.1107E+01	.1107E+01	.9392E+00	.9392E+00
37	.0000E+00	.0000E+00	.0000E+00	.0000E+00
	.1107E+01	.1107E+01	.9392E+00	.9392E+00
38	.0000E+00	.0000E+00	.0000E+00	.0000E+00
	.1107E+01	.1107E+01	.9392E+00	.9392E+00
39	.0000E+00	.0000E+00	.0000E+00	.0000E+00
	.1107E+01	.1107E+01	.9392E+00	.9392E+00
40	.0000E+00	.0000E+00	.0000E+00	.0000E+00
	.1107E+01	.1107E+01	.9392E+00	.9392E+00
41	.0000E+00	.0000E+00	.0000E+00	.0000E+00
	.1107E+01	.1107E+01	.9392E+00	.9392E+00
42	.0000E+00	.0000E+00	.0000E+00	.0000E+00
	.1107E+01	.1107E+01	.9392E+00	.9392E+00
43	.0000E+00	.0000E+00	.0000E+00	.0000E+00
	.1107E+01	.1107E+01	.9392E+00	.9392E+00
44	.0000E+00	.0000E+00	.0000E+00	.0000E+00
	.1107E+01	.1107E+01	.9392E+00	.9392E+00
45	.0000E+00	.0000E+00	.0000E+00	.0000E+00
	.9392E+00	.9392E+00	.7715E+00	.7715E+00
46	.0000E+00	.0000E+00	.0000E+00	.0000E+00
	.9392E+00	.9392E+00	.7715E+00	.7715E+00

========== I M A G E S 3 D ==========
= Copyright (c) 1984 Celestial Software Inc. =
==========

SOLVE DISPLACEMENTS Version 2.0 07/01/90

L O A D C A S E 3

LATERAL EARTH PRESSURE

Plate/Temp Plate/Pressure Plate/Lat. load	Node1 Node1 Side	Node2 Node2 Dir.	Node3 Node3 Node1	Node4 Node4 Node2
47	.0000E+00	.0000E+00	.0000E+00	.0000E+00
	.9392E+00	.9392E+00	.7715E+00	.7715E+00
48	.0000E+00	.0000E+00	.0000E+00	.0000E+00
	.9392E+00	.9392E+00	.7715E+00	.7715E+00
49	.0000E+00	.0000E+00	.0000E+00	.0000E+00
	.9392E+00	.9392E+00	.7715E+00	.7715E+00
50	.0000E+00	.0000E+00	.0000E+00	.0000E+00
	.9392E+00	.9392E+00	.7715E+00	.7715E+00
51	.0000E+00	.0000E+00	.0000E+00	.0000E+00
	.9392E+00	.9392E+00	.7715E+00	.7715E+00
52	.0000E+00	.0000E+00	.0000E+00	.0000E+00
	.9392E+00	.9392E+00	.7715E+00	.7715E+00
53	.0000E+00	.0000E+00	.0000E+00	.0000E+00
	.9392E+00	.9392E+00	.7715E+00	.7715E+00
54	.0000E+00	.0000E+00	.0000E+00	.0000E+00
	.9392E+00	.9392E+00	.7715E+00	.7715E+00
55	.0000E+00	.0000E+00	.0000E+00	.0000E+00
	.9392E+00	.9392E+00	.7715E+00	.7715E+00
56	.0000E+00	.0000E+00	.0000E+00	.0000E+00
	.7715E+00	.7715E+00	.6205E+00	.6205E+00
57	.0000E+00	.0000E+00	.0000E+00	.0000E+00
	.7715E+00	.7715E+00	.6205E+00	.6205E+00
58	.0000E+00	.0000E+00	.0000E+00	.0000E+00
	.7715E+00	.7715E+00	.6205E+00	.6205E+00
59	.0000E+00	.0000E+00	.0000E+00	.0000E+00
	.7715E+00	.7715E+00	.6205E+00	.6205E+00
60	.0000E+00	.0000E+00	.0000E+00	.0000E+00
	.7715E+00	.7715E+00	.6205E+00	.6205E+00
61	.0000E+00	.0000E+00	.0000E+00	.0000E+00
	.7715E+00	.7715E+00	.6205E+00	.6205E+00
62	.0000E+00	.0000E+00	.0000E+00	.0000E+00
	.7715E+00	.7715E+00	.6205E+00	.6205E+00
63	.0000E+00	.0000E+00	.0000E+00	.0000E+00
	.7715E+00	.7715E+00	.6205E+00	.6205E+00
64	.0000E+00	.0000E+00	.0000E+00	.0000E+00
	.7715E+00	.7715E+00	.6205E+00	.6205E+00
65	.0000E+00	.0000E+00	.0000E+00	.0000E+00
	.7715E+00	.7715E+00	.6205E+00	.6205E+00
66	.0000E+00	.0000E+00	.0000E+00	.0000E+00
	.7715E+00	.7715E+00	.6205E+00	.6205E+00

========== I M A G E S 3 D ==========
= Copyright (c) 1984 Celestial Software Inc. =
==========

SOLVE DISPLACEMENTS Version 2.0 07/01/90

L O A D C A S E 3

LATERAL EARTH PRESSURE

Plate/Temp Plate/Pressure Plate/Lat. load	Node1 Node1 Side	Node2 Node2 Dir.	Node3 Node3 Node1	Node4 Node4 Node2
67	.0000E+00	.0000E+00	.0000E+00	.0000E+00
	.6205E+00	.6205E+00	.4696E+00	.4696E+00
68	.0000E+00	.0000E+00	.0000E+00	.0000E+00
	.6205E+00	.6205E+00	.4696E+00	.4696E+00
69	.0000E+00	.0000E+00	.0000E+00	.0000E+00
	.6205E+00	.6205E+00	.4696E+00	.4696E+00
70	.0000E+00	.0000E+00	.0000E+00	.0000E+00
	.6205E+00	.6205E+00	.4696E+00	.4696E+00
71	.0000E+00	.0000E+00	.0000E+00	.0000E+00
	.6205E+00	.6205E+00	.4696E+00	.4696E+00
72	.0000E+00	.0000E+00	.0000E+00	.0000E+00
	.6205E+00	.6205E+00	.4696E+00	.4696E+00
73	.0000E+00	.0000E+00	.0000E+00	.0000E+00
	.6205E+00	.6205E+00	.4696E+00	.4696E+00
74	.0000E+00	.0000E+00	.0000E+00	.0000E+00
	.6205E+00	.6205E+00	.4696E+00	.4696E+00
75	.0000E+00	.0000E+00	.0000E+00	.0000E+00
	.6205E+00	.6205E+00	.4696E+00	.4696E+00
76	.0000E+00	.0000E+00	.0000E+00	.0000E+00
	.6205E+00	.6205E+00	.4696E+00	.4696E+00
77	.0000E+00	.0000E+00	.0000E+00	.0000E+00
	.6205E+00	.6205E+00	.4696E+00	.4696E+00
78	.0000E+00	.0000E+00	.0000E+00	.0000E+00
	.4696E+00	.4696E+00	.3354E+00	.3354E+00
79	.0000E+00	.0000E+00	.0000E+00	.0000E+00
	.4696E+00	.4696E+00	.3354E+00	.3354E+00
80	.0000E+00	.0000E+00	.0000E+00	.0000E+00
	.4696E+00	.4696E+00	.3354E+00	.3354E+00
81	.0000E+00	.0000E+00	.0000E+00	.0000E+00
	.4696E+00	.4696E+00	.3354E+00	.3354E+00
82	.0000E+00	.0000E+00	.0000E+00	.0000E+00
	.4696E+00	.4696E+00	.3354E+00	.3354E+00
83	.0000E+00	.0000E+00	.0000E+00	.0000E+00
	.4696E+00	.4696E+00	.3354E+00	.3354E+00
84	.0000E+00	.0000E+00	.0000E+00	.0000E+00
	.4696E+00	.4696E+00	.3354E+00	.3354E+00
85	.0000E+00	.0000E+00	.0000E+00	.0000E+00
	.4696E+00	.4696E+00	.3354E+00	.3354E+00
86	.0000E+00	.0000E+00	.0000E+00	.0000E+00
	.4696E+00	.4696E+00	.3354E+00	.3354E+00

========== I M A G E S 3 D ==========
= Copyright (c) 1984 Celestial Software Inc. =
==========

SOLVE DISPLACEMENTS Version 2.0 07/01/90

L O A D C A S E 3

LATERAL EARTH PRESSURE

Plate/Temp Plate/Pressure Plate/Lat. load	Node1 Node1 Side	Node2 Node2 Dir.	Node3 Node3 Node1	Node4 Node4 Node2
87	.0000E+00	.0000E+00	.0000E+00	.0000E+00
	.4696E+00	.4696E+00	.3354E+00	.3354E+00
88	.0000E+00	.0000E+00	.0000E+00	.0000E+00
	.4696E+00	.4696E+00	.3354E+00	.3354E+00
89	.0000E+00	.0000E+00	.0000E+00	.0000E+00
	.3354E+00	.3354E+00	.2013E+00	.2013E+00
90	.0000E+00	.0000E+00	.0000E+00	.0000E+00
	.3354E+00	.3354E+00	.2013E+00	.2013E+00
91	.0000E+00	.0000E+00	.0000E+00	.0000E+00
	.3354E+00	.3354E+00	.2013E+00	.2013E+00
92	.0000E+00	.0000E+00	.0000E+00	.0000E+00
	.3354E+00	.3354E+00	.2013E+00	.2013E+00
93	.0000E+00	.0000E+00	.0000E+00	.0000E+00
	.3354E+00	.3354E+00	.2013E+00	.2013E+00
94	.0000E+00	.0000E+00	.0000E+00	.0000E+00
	.3354E+00	.3354E+00	.2013E+00	.2013E+00
95	.0000E+00	.0000E+00	.0000E+00	.0000E+00
	.3354E+00	.3354E+00	.2013E+00	.2013E+00
96	.0000E+00	.0000E+00	.0000E+00	.0000E+00
	.3354E+00	.3354E+00	.2013E+00	.2013E+00
97	.0000E+00	.0000E+00	.0000E+00	.0000E+00
	.3354E+00	.3354E+00	.2013E+00	.2013E+00
98	.0000E+00	.0000E+00	.0000E+00	.0000E+00
	.3354E+00	.3354E+00	.2013E+00	.2013E+00
99	.0000E+00	.0000E+00	.0000E+00	.0000E+00
	.3354E+00	.3354E+00	.2013E+00	.2013E+00
100	.0000E+00	.0000E+00	.0000E+00	.0000E+00
	.2013E+00	.2013E+00	.1006E+00	.1006E+00
101	.0000E+00	.0000E+00	.0000E+00	.0000E+00
	.2013E+00	.2013E+00	.1006E+00	.1006E+00
102	.0000E+00	.0000E+00	.0000E+00	.0000E+00
	.2013E+00	.2013E+00	.1006E+00	.1006E+00
103	.0000E+00	.0000E+00	.0000E+00	.0000E+00
	.2013E+00	.2013E+00	.1006E+00	.1006E+00
104	.0000E+00	.0000E+00	.0000E+00	.0000E+00
	.2013E+00	.2013E+00	.1006E+00	.1006E+00
105	.0000E+00	.0000E+00	.0000E+00	.0000E+00
	.2013E+00	.2013E+00	.1006E+00	.1006E+00
106	.0000E+00	.0000E+00	.0000E+00	.0000E+00
	.2013E+00	.2013E+00	.1006E+00	.1006E+00

```
============== I M A G E S  3 D ==============
= Copyright (c) 1984   Celestial Software Inc. =
===============================================
```

SOLVE DISPLACEMENTS Version 2.0 07/01/90

L O A D C A S E 3

LATERAL EARTH PRESSURE

Plate/Temp Plate/Pressure Plate/Lat. load	Nodel Nodel Side	Node2 Node2 Dir.	Node3 Node3 Nodel	Node4 Node4 Node2
107	.0000E+00	.0000E+00	.0000E+00	.0000E+00
	.2013E+00	.2013E+00	.1006E+00	.1006E+00
108	.0000E+00	.0000E+00	.0000E+00	.0000E+00
	.2013E+00	.2013E+00	.1006E+00	.1006E+00
109	.0000E+00	.0000E+00	.0000E+00	.0000E+00
	.2013E+00	.2013E+00	.1006E+00	.1006E+00
110	.0000E+00	.0000E+00	.0000E+00	.0000E+00
	.2013E+00	.2013E+00	.1006E+00	.1006E+00
111	.0000E+00	.0000E+00	.0000E+00	.0000E+00
	.1006E+00	.1006E+00	.1110E-15	.1110E-15
112	.0000E+00	.0000E+00	.0000E+00	.0000E+00
	.1006E+00	.1006E+00	.1110E-15	.1110E-15
113	.0000E+00	.0000E+00	.0000E+00	.0000E+00
	.1006E+00	.1006E+00	.1110E-15	.1110E-15
114	.0000E+00	.0000E+00	.0000E+00	.0000E+00
	.1006E+00	.1006E+00	.1110E-15	.1110E-15
115	.0000E+00	.0000E+00	.0000E+00	.0000E+00
	.1006E+00	.1006E+00	.1110E-15	.1110E-15
116	.0000E+00	.0000E+00	.0000E+00	.0000E+00
	.1006E+00	.1006E+00	.1110E-15	.1110E-15
117	.0000E+00	.0000E+00	.0000E+00	.0000E+00
	.1006E+00	.1006E+00	.1110E-15	.1110E-15
118	.0000E+00	.0000E+00	.0000E+00	.0000E+00
	.1006E+00	.1006E+00	.1110E-15	.1110E-15
119	.0000E+00	.0000E+00	.0000E+00	.0000E+00
	.1006E+00	.1006E+00	.1110E-15	.1110E-15
120	.0000E+00	.0000E+00	.0000E+00	.0000E+00
	.1006E+00	.1006E+00	.1110E-15	.1110E-15
121	.0000E+00	.0000E+00	.0000E+00	.0000E+00
	.1006E+00	.1006E+00	.1110E-15	.1110E-15

========== I M A G E S 3 D ==========
= Copyright (c) 1984 Celestial Software Inc. =
==========

SOLVE DISPLACEMENTS Version 2.0 07/01/90

L O A D C A S E 4

SEISMIC COVER BLOCK LOAD

GRAVITY LOADING

Direction	Gravity Factor	Load Factor
X	.0000E+00	.1000E+01
Y	.0000E+00	.1000E+01
Z	.0000E+00	.1000E+01

INERTIA LOADING

Direction	Translational Accel.	Rotational Accel.	Rotational Velocity	Origin
X	.0000E+00	.0000E+00	.0000E+00	.0000E+00
Y	.0000E+00	.0000E+00	.0000E+00	.0000E+00
Z	.0000E+00	.0000E+00	.0000E+00	.0000E+00

Gravity Acceleration = .3864E+03

CONCENTRATED LOADS

Node	Fx	Fy	Fz	Mx	My	Mz
109	.0000E+00	-.5850E+03	.0000E+00	.0000E+00	.0000E+00	.0000E+00
115	.0000E+00	-.1016E+04	.0000E+00	.0000E+00	.0000E+00	.0000E+00
120	.0000E+00	-.4310E+03	.0000E+00	.0000E+00	.0000E+00	.0000E+00

REFERENCE TEMPERATURE = .0000E+00

========== I M A G E S 3 D ==========
= Copyright (c) 1984 Celestial Software Inc. =
==========

SOLVE DISPLACEMENTS Version 2.0 07/01/90

L O A D C A S E 5

OVERBURDEN PRESSURE

GRAVITY LOADING

Direction	Gravity Factor	Load Factor
X	.0000E+00	.1000E+01
Y	.0000E+00	.1000E+01
Z	.0000E+00	.1000E+01

INERTIA LOADING

Direction	Translational Accel.	Rotational Accel.	Rotational Velocity	Origin
X	.0000E+00	.0000E+00	.0000E+00	.0000E+00
Y	.0000E+00	.0000E+00	.0000E+00	.0000E+00
Z	.0000E+00	.0000E+00	.0000E+00	.0000E+00

Gravity Acceleration = .3864E+03

REFERENCE TEMPERATURE = .0000E+00

PLATE TEMPERATURES/PRESSURES

Plate/Temp Plate/Pressure Plate/Lat. load	Node1 Node1 Side	Node2 Node2 Dir.	Node3 Node3 Node1	Node4 Node4 Node2
1	.0000E+00	.0000E+00	.0000E+00	.0000E+00
	.1389E+01	.1389E+01	.1389E+01	.1389E+01
2	.0000E+00	.0000E+00	.0000E+00	.0000E+00
	.1389E+01	.1389E+01	.1389E+01	.1389E+01
3	.0000E+00	.0000E+00	.0000E+00	.0000E+00
	.1389E+01	.1389E+01	.1389E+01	.1389E+01
4	.0000E+00	.0000E+00	.0000E+00	.0000E+00
	.1389E+01	.1389E+01	.1389E+01	.1389E+01
5	.0000E+00	.0000E+00	.0000E+00	.0000E+00
	.1389E+01	.1389E+01	.1389E+01	.1389E+01
6	.0000E+00	.0000E+00	.0000E+00	.0000E+00
	.1389E+01	.1389E+01	.1389E+01	.1389E+01

========== I M A G E S 3 D ==========
= Copyright (c) 1984 Celestial Software Inc. =
==========

SOLVE DISPLACEMENTS Version 2.0 07/01/90

L O A D C A S E 5

OVERBURDEN PRESSURE

Plate/Temp Plate/Pressure Plate/Lat. load	Node1 Node1 Side	Node2 Node2 Dir.	Node3 Node3 Node1	Node4 Node4 Node2
7	.0000E+00	.0000E+00	.0000E+00	.0000E+00
	.1389E+01	.1389E+01	.1389E+01	.1389E+01
8	.0000E+00	.0000E+00	.0000E+00	.0000E+00
	.1389E+01	.1389E+01	.1389E+01	.1389E+01
9	.0000E+00	.0000E+00	.0000E+00	.0000E+00
	.1389E+01	.1389E+01	.1389E+01	.1389E+01
10	.0000E+00	.0000E+00	.0000E+00	.0000E+00
	.1389E+01	.1389E+01	.1389E+01	.1389E+01
11	.0000E+00	.0000E+00	.0000E+00	.0000E+00
	.1389E+01	.1389E+01	.1389E+01	.1389E+01
12	.0000E+00	.0000E+00	.0000E+00	.0000E+00
	.1389E+01	.1389E+01	.1389E+01	.1389E+01
13	.0000E+00	.0000E+00	.0000E+00	.0000E+00
	.1389E+01	.1389E+01	.1389E+01	.1389E+01
14	.0000E+00	.0000E+00	.0000E+00	.0000E+00
	.1389E+01	.1389E+01	.1389E+01	.1389E+01
15	.0000E+00	.0000E+00	.0000E+00	.0000E+00
	.1389E+01	.1389E+01	.1389E+01	.1389E+01
16	.0000E+00	.0000E+00	.0000E+00	.0000E+00
	.1389E+01	.1389E+01	.1389E+01	.1389E+01
17	.0000E+00	.0000E+00	.0000E+00	.0000E+00
	.1389E+01	.1389E+01	.1389E+01	.1389E+01
18	.0000E+00	.0000E+00	.0000E+00	.0000E+00
	.1389E+01	.1389E+01	.1389E+01	.1389E+01
19	.0000E+00	.0000E+00	.0000E+00	.0000E+00
	.1389E+01	.1389E+01	.1389E+01	.1389E+01
20	.0000E+00	.0000E+00	.0000E+00	.0000E+00
	.1389E+01	.1389E+01	.1389E+01	.1389E+01
21	.0000E+00	.0000E+00	.0000E+00	.0000E+00
	.1389E+01	.1389E+01	.1389E+01	.1389E+01
22	.0000E+00	.0000E+00	.0000E+00	.0000E+00
	.1389E+01	.1389E+01	.1389E+01	.1389E+01
23	.0000E+00	.0000E+00	.0000E+00	.0000E+00
	.1389E+01	.1389E+01	.1389E+01	.1389E+01
24	.0000E+00	.0000E+00	.0000E+00	.0000E+00
	.1389E+01	.1389E+01	.1389E+01	.1389E+01
25	.0000E+00	.0000E+00	.0000E+00	.0000E+00
	.1389E+01	.1389E+01	.1389E+01	.1389E+01
26	.0000E+00	.0000E+00	.0000E+00	.0000E+00
	.1389E+01	.1389E+01	.1389E+01	.1389E+01

========== I M A G E S 3 D ==========
= Copyright (c) 1984 Celestial Software Inc. =
==========

SOLVE DISPLACEMENTS Version 2.0 07/01/90

L O A D C A S E 5

OVERBURDEN PRESSURE

Plate/Temp Plate/Pressure Plate/Lat. load	Node1 Node1 Side	Node2 Node2 Dir.	Node3 Node3 Node1	Node4 Node4 Node2
27	.0000E+00	.0000E+00	.0000E+00	.0000E+00
	.1389E+01	.1389E+01	.1389E+01	.1389E+01
28	.0000E+00	.0000E+00	.0000E+00	.0000E+00
	.1389E+01	.1389E+01	.1389E+01	.1389E+01
29	.0000E+00	.0000E+00	.0000E+00	.0000E+00
	.1389E+01	.1389E+01	.1389E+01	.1389E+01
30	.0000E+00	.0000E+00	.0000E+00	.0000E+00
	.1389E+01	.1389E+01	.1389E+01	.1389E+01
31	.0000E+00	.0000E+00	.0000E+00	.0000E+00
	.1389E+01	.1389E+01	.1389E+01	.1389E+01
32	.0000E+00	.0000E+00	.0000E+00	.0000E+00
	.1389E+01	.1389E+01	.1389E+01	.1389E+01
33	.0000E+00	.0000E+00	.0000E+00	.0000E+00
	.1389E+01	.1389E+01	.1389E+01	.1389E+01
34	.0000E+00	.0000E+00	.0000E+00	.0000E+00
	.1389E+01	.1389E+01	.1389E+01	.1389E+01
35	.0000E+00	.0000E+00	.0000E+00	.0000E+00
	.1389E+01	.1389E+01	.1389E+01	.1389E+01
36	.0000E+00	.0000E+00	.0000E+00	.0000E+00
	.1389E+01	.1389E+01	.1389E+01	.1389E+01
37	.0000E+00	.0000E+00	.0000E+00	.0000E+00
	.1389E+01	.1389E+01	.1389E+01	.1389E+01
38	.0000E+00	.0000E+00	.0000E+00	.0000E+00
	.1389E+01	.1389E+01	.1389E+01	.1389E+01
39	.0000E+00	.0000E+00	.0000E+00	.0000E+00
	.1389E+01	.1389E+01	.1389E+01	.1389E+01
40	.0000E+00	.0000E+00	.0000E+00	.0000E+00
	.1389E+01	.1389E+01	.1389E+01	.1389E+01
41	.0000E+00	.0000E+00	.0000E+00	.0000E+00
	.1389E+01	.1389E+01	.1389E+01	.1389E+01
42	.0000E+00	.0000E+00	.0000E+00	.0000E+00
	.1389E+01	.1389E+01	.1389E+01	.1389E+01
43	.0000E+00	.0000E+00	.0000E+00	.0000E+00
	.1389E+01	.1389E+01	.1389E+01	.1389E+01
44	.0000E+00	.0000E+00	.0000E+00	.0000E+00
	.1389E+01	.1389E+01	.1389E+01	.1389E+01
45	.0000E+00	.0000E+00	.0000E+00	.0000E+00
	.1389E+01	.1389E+01	.1389E+01	.1389E+01
46	.0000E+00	.0000E+00	.0000E+00	.0000E+00
	.1389E+01	.1389E+01	.1389E+01	.1389E+01

========== I M A G E S 3 D ==========
= Copyright (c) 1984 Celestial Software Inc. =
==========

SOLVE DISPLACEMENTS Version 2.0 07/01/90

L O A D C A S E 5

OVERBURDEN PRESSURE

Plate/Temp Plate/Pressure Plate/Lat. load	Node1 Node1 Side	Node2 Node2 Dir.	Node3 Node3 Node1	Node4 Node4 Node2
47	.0000E+00	.0000E+00	.0000E+00	.0000E+00
	.1389E+01	.1389E+01	.1389E+01	.1389E+01
48	.0000E+00	.0000E+00	.0000E+00	.0000E+00
	.1389E+01	.1389E+01	.1389E+01	.1389E+01
49	.0000E+00	.0000E+00	.0000E+00	.0000E+00
	.1389E+01	.1389E+01	.1389E+01	.1389E+01
50	.0000E+00	.0000E+00	.0000E+00	.0000E+00
	.1389E+01	.1389E+01	.1389E+01	.1389E+01
51	.0000E+00	.0000E+00	.0000E+00	.0000E+00
	.1389E+01	.1389E+01	.1389E+01	.1389E+01
52	.0000E+00	.0000E+00	.0000E+00	.0000E+00
	.1389E+01	.1389E+01	.1389E+01	.1389E+01
53	.0000E+00	.0000E+00	.0000E+00	.0000E+00
	.1389E+01	.1389E+01	.1389E+01	.1389E+01
54	.0000E+00	.0000E+00	.0000E+00	.0000E+00
	.1389E+01	.1389E+01	.1389E+01	.1389E+01
55	.0000E+00	.0000E+00	.0000E+00	.0000E+00
	.1389E+01	.1389E+01	.1389E+01	.1389E+01
56	.0000E+00	.0000E+00	.0000E+00	.0000E+00
	.1389E+01	.1389E+01	.1389E+01	.1389E+01
57	.0000E+00	.0000E+00	.0000E+00	.0000E+00
	.1389E+01	.1389E+01	.1389E+01	.1389E+01
58	.0000E+00	.0000E+00	.0000E+00	.0000E+00
	.1389E+01	.1389E+01	.1389E+01	.1389E+01
59	.0000E+00	.0000E+00	.0000E+00	.0000E+00
	.1389E+01	.1389E+01	.1389E+01	.1389E+01
60	.0000E+00	.0000E+00	.0000E+00	.0000E+00
	.1389E+01	.1389E+01	.1389E+01	.1389E+01
61	.0000E+00	.0000E+00	.0000E+00	.0000E+00
	.1389E+01	.1389E+01	.1389E+01	.1389E+01
62	.0000E+00	.0000E+00	.0000E+00	.0000E+00
	.1389E+01	.1389E+01	.1389E+01	.1389E+01
63	.0000E+00	.0000E+00	.0000E+00	.0000E+00
	.1389E+01	.1389E+01	.1389E+01	.1389E+01
64	.0000E+00	.0000E+00	.0000E+00	.0000E+00
	.1389E+01	.1389E+01	.1389E+01	.1389E+01
65	.0000E+00	.0000E+00	.0000E+00	.0000E+00
	.1389E+01	.1389E+01	.1389E+01	.1389E+01
66	.0000E+00	.0000E+00	.0000E+00	.0000E+00
	.1389E+01	.1389E+01	.1389E+01	.1389E+01

========== I M A G E S 3 D ==========
= Copyright (c) 1984 Celestial Software Inc. =
==========

SOLVE DISPLACEMENTS Version 2.0 07/01/90

L O A D C A S E 5

OVERBURDEN PRESSURE

Plate/Temp Plate/Pressure Plate/Lat. load	Node1 Node1 Side	Node2 Node2 Dir.	Node3 Node3 Node1	Node4 Node4 Node2
67	.0000E+00	.0000E+00	.0000E+00	.0000E+00
	.1389E+01	.1389E+01	.1389E+01	.1389E+01
68	.0000E+00	.0000E+00	.0000E+00	.0000E+00
	.1389E+01	.1389E+01	.1389E+01	.1389E+01
69	.0000E+00	.0000E+00	.0000E+00	.0000E+00
	.1389E+01	.1389E+01	.1389E+01	.1389E+01
70	.0000E+00	.0000E+00	.0000E+00	.0000E+00
	.1389E+01	.1389E+01	.1389E+01	.1389E+01
71	.0000E+00	.0000E+00	.0000E+00	.0000E+00
	.1389E+01	.1389E+01	.1389E+01	.1389E+01
72	.0000E+00	.0000E+00	.0000E+00	.0000E+00
	.1389E+01	.1389E+01	.1389E+01	.1389E+01
73	.0000E+00	.0000E+00	.0000E+00	.0000E+00
	.1389E+01	.1389E+01	.1389E+01	.1389E+01
74	.0000E+00	.0000E+00	.0000E+00	.0000E+00
	.1389E+01	.1389E+01	.1389E+01	.1389E+01
75	.0000E+00	.0000E+00	.0000E+00	.0000E+00
	.1389E+01	.1389E+01	.1389E+01	.1389E+01
76	.0000E+00	.0000E+00	.0000E+00	.0000E+00
	.1389E+01	.1389E+01	.1389E+01	.1389E+01
77	.0000E+00	.0000E+00	.0000E+00	.0000E+00
	.1389E+01	.1389E+01	.1389E+01	.1389E+01
78	.0000E+00	.0000E+00	.0000E+00	.0000E+00
	.1389E+01	.1389E+01	.1389E+01	.1389E+01
79	.0000E+00	.0000E+00	.0000E+00	.0000E+00
	.1389E+01	.1389E+01	.1389E+01	.1389E+01
80	.0000E+00	.0000E+00	.0000E+00	.0000E+00
	.1389E+01	.1389E+01	.1389E+01	.1389E+01
81	.0000E+00	.0000E+00	.0000E+00	.0000E+00
	.1389E+01	.1389E+01	.1389E+01	.1389E+01
82	.0000E+00	.0000E+00	.0000E+00	.0000E+00
	.1389E+01	.1389E+01	.1389E+01	.1389E+01
83	.0000E+00	.0000E+00	.0000E+00	.0000E+00
	.1389E+01	.1389E+01	.1389E+01	.1389E+01
84	.0000E+00	.0000E+00	.0000E+00	.0000E+00
	.1389E+01	.1389E+01	.1389E+01	.1389E+01
85	.0000E+00	.0000E+00	.0000E+00	.0000E+00
	.1389E+01	.1389E+01	.1389E+01	.1389E+01
86	.0000E+00	.0000E+00	.0000E+00	.0000E+00
	.1389E+01	.1389E+01	.1389E+01	.1389E+01

========== I M A G E S 3 D ==========
= Copyright (c) 1984 Celestial Software Inc. =
==========

SOLVE DISPLACEMENTS Version 2.0 07/01/90

L O A D C A S E 5

OVERBURDEN PRESSURE

Plate/Temp Plate/Pressure Plate/Lat. load	Node1 Node1 Side	Node2 Node2 Dir.	Node3 Node3 Node1	Node4 Node4 Node2
87	.0000E+00	.0000E+00	.0000E+00	.0000E+00
	.1389E+01	.1389E+01	.1389E+01	.1389E+01
88	.0000E+00	.0000E+00	.0000E+00	.0000E+00
	.1389E+01	.1389E+01	.1389E+01	.1389E+01
89	.0000E+00	.0000E+00	.0000E+00	.0000E+00
	.1389E+01	.1389E+01	.1389E+01	.1389E+01
90	.0000E+00	.0000E+00	.0000E+00	.0000E+00
	.1389E+01	.1389E+01	.1389E+01	.1389E+01
91	.0000E+00	.0000E+00	.0000E+00	.0000E+00
	.1389E+01	.1389E+01	.1389E+01	.1389E+01
92	.0000E+00	.0000E+00	.0000E+00	.0000E+00
	.1389E+01	.1389E+01	.1389E+01	.1389E+01
93	.0000E+00	.0000E+00	.0000E+00	.0000E+00
	.1389E+01	.1389E+01	.1389E+01	.1389E+01
94	.0000E+00	.0000E+00	.0000E+00	.0000E+00
	.1389E+01	.1389E+01	.1389E+01	.1389E+01
95	.0000E+00	.0000E+00	.0000E+00	.0000E+00
	.1389E+01	.1389E+01	.1389E+01	.1389E+01
96	.0000E+00	.0000E+00	.0000E+00	.0000E+00
	.1389E+01	.1389E+01	.1389E+01	.1389E+01
97	.0000E+00	.0000E+00	.0000E+00	.0000E+00
	.1389E+01	.1389E+01	.1389E+01	.1389E+01
98	.0000E+00	.0000E+00	.0000E+00	.0000E+00
	.1389E+01	.1389E+01	.1389E+01	.1389E+01
99	.0000E+00	.0000E+00	.0000E+00	.0000E+00
	.1389E+01	.1389E+01	.1389E+01	.1389E+01
100	.0000E+00	.0000E+00	.0000E+00	.0000E+00
	.1389E+01	.1389E+01	.1389E+01	.1389E+01
101	.0000E+00	.0000E+00	.0000E+00	.0000E+00
	.1389E+01	.1389E+01	.1389E+01	.1389E+01
102	.0000E+00	.0000E+00	.0000E+00	.0000E+00
	.1389E+01	.1389E+01	.1389E+01	.1389E+01
103	.0000E+00	.0000E+00	.0000E+00	.0000E+00
	.1389E+01	.1389E+01	.1389E+01	.1389E+01
104	.0000E+00	.0000E+00	.0000E+00	.0000E+00
	.1389E+01	.1389E+01	.1389E+01	.1389E+01
105	.0000E+00	.0000E+00	.0000E+00	.0000E+00
	.1389E+01	.1389E+01	.1389E+01	.1389E+01
106	.0000E+00	.0000E+00	.0000E+00	.0000E+00
	.1389E+01	.1389E+01	.1389E+01	.1389E+01

```
================ I M A G E S  3 D ================
= Copyright (c) 1984   Celestial Software Inc. =
==================================================
```

SOLVE DISPLACEMENTS Version 2.0 07/01/90

L O A D C A S E 5

OVERBURDEN PRESSURE

Plate/Temp Plate/Pressure Plate/Lat. load	Node1 Node1 Side	Node2 Node2 Dir.	Node3 Node3 Node1	Node4 Node4 Node2
107	.0000E+00	.0000E+00	.0000E+00	.0000E+00
	.1389E+01	.1389E+01	.1389E+01	.1389E+01
108	.0000E+00	.0000E+00	.0000E+00	.0000E+00
	.1389E+01	.1389E+01	.1389E+01	.1389E+01
109	.0000E+00	.0000E+00	.0000E+00	.0000E+00
	.1389E+01	.1389E+01	.1389E+01	.1389E+01
110	.0000E+00	.0000E+00	.0000E+00	.0000E+00
	.1389E+01	.1389E+01	.1389E+01	.1389E+01
111	.0000E+00	.0000E+00	.0000E+00	.0000E+00
	.1389E+01	.1389E+01	.1389E+01	.1389E+01
112	.0000E+00	.0000E+00	.0000E+00	.0000E+00
	.1389E+01	.1389E+01	.1389E+01	.1389E+01
113	.0000E+00	.0000E+00	.0000E+00	.0000E+00
	.1389E+01	.1389E+01	.1389E+01	.1389E+01
114	.0000E+00	.0000E+00	.0000E+00	.0000E+00
	.1389E+01	.1389E+01	.1389E+01	.1389E+01
115	.0000E+00	.0000E+00	.0000E+00	.0000E+00
	.1389E+01	.1389E+01	.1389E+01	.1389E+01
116	.0000E+00	.0000E+00	.0000E+00	.0000E+00
	.1389E+01	.1389E+01	.1389E+01	.1389E+01
117	.0000E+00	.0000E+00	.0000E+00	.0000E+00
	.1389E+01	.1389E+01	.1389E+01	.1389E+01
118	.0000E+00	.0000E+00	.0000E+00	.0000E+00
	.1389E+01	.1389E+01	.1389E+01	.1389E+01
119	.0000E+00	.0000E+00	.0000E+00	.0000E+00
	.1389E+01	.1389E+01	.1389E+01	.1389E+01
120	.0000E+00	.0000E+00	.0000E+00	.0000E+00
	.1389E+01	.1389E+01	.1389E+01	.1389E+01
121	.0000E+00	.0000E+00	.0000E+00	.0000E+00
	.1389E+01	.1389E+01	.1389E+01	.1389E+01

```
=============== I M A G E S  3 D ===============
= Copyright (c) 1984   Celestial Software Inc. =
================================================
```

SOLVE DISPLACEMENTS Version 2.0 07/01/90

L O A D C A S E 6

OPERATING PIPE AND JUMPER LOADS

GRAVITY LOADING

Direction	Gravity Factor	Load Factor
X	.0000E+00	.1000E+01
Y	.0000E+00	.1000E+01
Z	.0000E+00	.1000E+01

INERTIA LOADING

Direction	Translational Accel.	Rotational Accel.	Rotational Velocity	Origin
X	.0000E+00	.0000E+00	.0000E+00	.0000E+00
Y	.0000E+00	.0000E+00	.0000E+00	.0000E+00
Z	.0000E+00	.0000E+00	.0000E+00	.0000E+00

Gravity Acceleration = .3864E+03

CONCENTRATED LOADS

Node	Fx	Fy	Fz	Mx	My	Mz
94	.7650E+03	.9290E+03	.3849E+04	.7440E+04	.2963E+05	.4680E+04

REFERENCE TEMPERATURE = .0000E+00

```
============== I M A G E S  3 D ==============
= Copyright (c) 1984   Celestial Software Inc. =
===============================================
```

SOLVE DISPLACEMENTS Version 2.0 07/01/90

L O A D C A S E 7

SEISMIC PIPE AND JUMPER LOADS

GRAVITY LOADING

Direction	Gravity Factor	Load Factor
X	.0000E+00	.1000E+01
Y	.0000E+00	.1000E+01
Z	.0000E+00	.1000E+01

INERTIA LOADING

Direction	Translational Accel.	Rotational Accel.	Rotational Velocity	Origin
X	.0000E+00	.0000E+00	.0000E+00	.0000E+00
Y	.0000E+00	.0000E+00	.0000E+00	.0000E+00
Z	.0000E+00	.0000E+00	.0000E+00	.0000E+00

Gravity Acceleration = .3864E+03

CONCENTRATED LOADS

Node	Fx	Fy	Fz	Mx	My	Mz
94	.7560E+03	.9730E+03	.4187E+04	.6072E+04	.7320E+04	.5556E+04

REFERENCE TEMPERATURE = .0000E+00

```
============== I M A G E S  3 D ==============
= Copyright (c) 1984   Celestial Software Inc. =
===============================================
```

SOLVE DISPLACEMENTS Version 2.0 07/01/90

L O A D C A S E 8

COVER BLOCK DEAD LOAD

GRAVITY LOADING

Direction	Gravity Factor	Load Factor
X	.0000E+00	.1000E+01
Y	.0000E+00	.1000E+01
Z	.0000E+00	.1000E+01

INERTIA LOADING

Direction	Translational Accel.	Rotational Accel.	Rotational Velocity	Origin
X	.0000E+00	.0000E+00	.0000E+00	.0000E+00
Y	.0000E+00	.0000E+00	.0000E+00	.0000E+00
Z	.0000E+00	.0000E+00	.0000E+00	.0000E+00

Gravity Acceleration = .3864E+03

CONCENTRATED LOADS

Node	Fx	Fy	Fz	Mx	My	Mz
109	.0000E+00	.2660E+04	.0000E+00	.0000E+00	.0000E+00	.0000E+00
115	.0000E+00	.4620E+04	.0000E+00	.0000E+00	.0000E+00	.0000E+00
120	.0000E+00	.1960E+04	.0000E+00	.0000E+00	.0000E+00	.0000E+00

REFERENCE TEMPERATURE = .0000E+00

========== I M A G E S 3 D ==========
= Copyright (c) 1984 Celestial Software Inc. =
==========

SOLVE DISPLACEMENTS Version 2.0 07/01/90

L O A D C A S E 1

SELF WEIGHT

APPLIED LOAD VECTOR

Node	Fx	Fy	Fz	Mx	My	Mz
1	.0000E+00	.0000E+00	.6250E+01	.0000E+00	.0000E+00	.0000E+00
2	.0000E+00	.0000E+00	.1146E+02	.0000E+00	.0000E+00	.0000E+00
3	.0000E+00	.0000E+00	.1042E+02	.0000E+00	.0000E+00	.0000E+00
4	.0000E+00	.0000E+00	.1042E+02	.0000E+00	.0000E+00	.0000E+00
5	.0000E+00	.0000E+00	.1042E+02	.0000E+00	.0000E+00	.0000E+00
6	.0000E+00	.0000E+00	.1042E+02	.0000E+00	.0000E+00	.0000E+00
7	.0000E+00	.0000E+00	.9895E+01	.0000E+00	.0000E+00	.0000E+00
8	.0000E+00	.0000E+00	.9374E+01	.0000E+00	.0000E+00	.0000E+00
9	.0000E+00	.0000E+00	.8854E+01	.0000E+00	.0000E+00	.0000E+00
10	.0000E+00	.0000E+00	.7812E+01	.0000E+00	.0000E+00	.0000E+00
11	.0000E+00	.0000E+00	.7291E+01	.0000E+00	.0000E+00	.0000E+00
12	.0000E+00	.0000E+00	.3646E+01	.0000E+00	.0000E+00	.0000E+00
13	.0000E+00	.0000E+00	.1250E+02	.0000E+00	.0000E+00	.0000E+00
14	.0000E+00	.0000E+00	.2292E+02	.0000E+00	.0000E+00	.0000E+00
15	.0000E+00	.0000E+00	.2083E+02	.0000E+00	.0000E+00	.0000E+00
16	.0000E+00	.0000E+00	.2083E+02	.0000E+00	.0000E+00	.0000E+00
17	.0000E+00	.0000E+00	.2083E+02	.0000E+00	.0000E+00	.0000E+00
18	.0000E+00	.0000E+00	.2083E+02	.0000E+00	.0000E+00	.0000E+00
19	.0000E+00	.0000E+00	.1979E+02	.0000E+00	.0000E+00	.0000E+00
20	.0000E+00	.0000E+00	.1875E+02	.0000E+00	.0000E+00	.0000E+00
21	.0000E+00	.0000E+00	.1771E+02	.0000E+00	.0000E+00	.0000E+00
22	.0000E+00	.0000E+00	.1562E+02	.0000E+00	.0000E+00	.0000E+00
23	.0000E+00	.0000E+00	.1458E+02	.0000E+00	.0000E+00	.0000E+00
24	.0000E+00	.0000E+00	.7291E+01	.0000E+00	.0000E+00	.0000E+00
25	.0000E+00	.0000E+00	.1250E+02	.0000E+00	.0000E+00	.0000E+00
26	.0000E+00	.0000E+00	.2292E+02	.0000E+00	.0000E+00	.0000E+00
27	.0000E+00	.0000E+00	.2083E+02	.0000E+00	.0000E+00	.0000E+00
28	.0000E+00	.0000E+00	.2083E+02	.0000E+00	.0000E+00	.0000E+00
29	.0000E+00	.0000E+00	.2083E+02	.0000E+00	.0000E+00	.0000E+00
30	.0000E+00	.0000E+00	.2083E+02	.0000E+00	.0000E+00	.0000E+00
31	.0000E+00	.0000E+00	.1979E+02	.0000E+00	.0000E+00	.0000E+00
32	.0000E+00	.0000E+00	.1875E+02	.0000E+00	.0000E+00	.0000E+00
33	.0000E+00	.0000E+00	.1771E+02	.0000E+00	.0000E+00	.0000E+00
34	.0000E+00	.0000E+00	.1562E+02	.0000E+00	.0000E+00	.0000E+00
35	.0000E+00	.0000E+00	.1458E+02	.0000E+00	.0000E+00	.0000E+00

========== I M A G E S 3 D ==========
= Copyright (c) 1984 Celestial Software Inc. =
==========

SOLVE DISPLACEMENTS Version 2.0 07/01/90

L O A D C A S E 1

SELF WEIGHT

APPLIED LOAD VECTOR

Node	Fx	Fy	Fz	Mx	My	Mz
36	.0000E+00	.0000E+00	.7291E+01	.0000E+00	.0000E+00	.0000E+00
37	.0000E+00	.0000E+00	.1250E+02	.0000E+00	.0000E+00	.0000E+00
38	.0000E+00	.0000E+00	.2292E+02	.0000E+00	.0000E+00	.0000E+00
39	.0000E+00	.0000E+00	.2083E+02	.0000E+00	.0000E+00	.0000E+00
40	.0000E+00	.0000E+00	.2083E+02	.0000E+00	.0000E+00	.0000E+00
41	.0000E+00	.0000E+00	.2083E+02	.0000E+00	.0000E+00	.0000E+00
42	.0000E+00	.0000E+00	.2083E+02	.0000E+00	.0000E+00	.0000E+00
43	.0000E+00	.0000E+00	.1979E+02	.0000E+00	.0000E+00	.0000E+00
44	.0000E+00	.0000E+00	.1875E+02	.0000E+00	.0000E+00	.0000E+00
45	.0000E+00	.0000E+00	.1771E+02	.0000E+00	.0000E+00	.0000E+00
46	.0000E+00	.0000E+00	.1562E+02	.0000E+00	.0000E+00	.0000E+00
47	.0000E+00	.0000E+00	.1458E+02	.0000E+00	.0000E+00	.0000E+00
48	.0000E+00	.0000E+00	.7291E+01	.0000E+00	.0000E+00	.0000E+00
49	.0000E+00	.0000E+00	.1250E+02	.0000E+00	.0000E+00	.0000E+00
50	.0000E+00	.0000E+00	.2292E+02	.0000E+00	.0000E+00	.0000E+00
51	.0000E+00	.0000E+00	.2083E+02	.0000E+00	.0000E+00	.0000E+00
52	.0000E+00	.0000E+00	.2083E+02	.0000E+00	.0000E+00	.0000E+00
53	.0000E+00	.0000E+00	.2083E+02	.0000E+00	.0000E+00	.0000E+00
54	.0000E+00	.0000E+00	.2083E+02	.0000E+00	.0000E+00	.0000E+00
55	.0000E+00	.0000E+00	.1979E+02	.0000E+00	.0000E+00	.0000E+00
56	.0000E+00	.0000E+00	.1875E+02	.0000E+00	.0000E+00	.0000E+00
57	.0000E+00	.0000E+00	.1771E+02	.0000E+00	.0000E+00	.0000E+00
58	.0000E+00	.0000E+00	.1562E+02	.0000E+00	.0000E+00	.0000E+00
59	.0000E+00	.0000E+00	.1458E+02	.0000E+00	.0000E+00	.0000E+00
60	.0000E+00	.0000E+00	.7291E+01	.0000E+00	.0000E+00	.0000E+00
61	.0000E+00	.0000E+00	.1187E+02	.0000E+00	.0000E+00	.0000E+00
62	.0000E+00	.0000E+00	.2177E+02	.0000E+00	.0000E+00	.0000E+00
63	.0000E+00	.0000E+00	.1979E+02	.0000E+00	.0000E+00	.0000E+00
64	.0000E+00	.0000E+00	.1979E+02	.0000E+00	.0000E+00	.0000E+00
65	.0000E+00	.0000E+00	.1979E+02	.0000E+00	.0000E+00	.0000E+00
66	.0000E+00	.0000E+00	.1979E+02	.0000E+00	.0000E+00	.0000E+00
67	.0000E+00	.0000E+00	.1880E+02	.0000E+00	.0000E+00	.0000E+00
68	.0000E+00	.0000E+00	.1781E+02	.0000E+00	.0000E+00	.0000E+00
69	.0000E+00	.0000E+00	.1682E+02	.0000E+00	.0000E+00	.0000E+00
70	.0000E+00	.0000E+00	.1484E+02	.0000E+00	.0000E+00	.0000E+00
71	.0000E+00	.0000E+00	.1385E+02	.0000E+00	.0000E+00	.0000E+00
72	.0000E+00	.0000E+00	.6927E+01	.0000E+00	.0000E+00	.0000E+00
73	.0000E+00	.0000E+00	.1125E+02	.0000E+00	.0000E+00	.0000E+00
74	.0000E+00	.0000E+00	.2062E+02	.0000E+00	.0000E+00	.0000E+00
75	.0000E+00	.0000E+00	.1875E+02	.0000E+00	.0000E+00	.0000E+00

========== I M A G E S 3 D ==========
= Copyright (c) 1984 Celestial Software Inc. =
==========

SOLVE DISPLACEMENTS Version 2.0 07/01/90

L O A D C A S E 1

SELF WEIGHT

APPLIED LOAD VECTOR

Node	Fx	Fy	Fz	Mx	My	Mz
76	.0000E+00	.0000E+00	.1875E+02	.0000E+00	.0000E+00	.0000E+00
77	.0000E+00	.0000E+00	.1875E+02	.0000E+00	.0000E+00	.0000E+00
78	.0000E+00	.0000E+00	.1875E+02	.0000E+00	.0000E+00	.0000E+00
79	.0000E+00	.0000E+00	.1781E+02	.0000E+00	.0000E+00	.0000E+00
80	.0000E+00	.0000E+00	.1687E+02	.0000E+00	.0000E+00	.0000E+00
81	.0000E+00	.0000E+00	.1594E+02	.0000E+00	.0000E+00	.0000E+00
82	.0000E+00	.0000E+00	.1406E+02	.0000E+00	.0000E+00	.0000E+00
83	.0000E+00	.0000E+00	.1312E+02	.0000E+00	.0000E+00	.0000E+00
84	.0000E+00	.0000E+00	.6562E+01	.0000E+00	.0000E+00	.0000E+00
85	.0000E+00	.0000E+00	.1062E+02	.0000E+00	.0000E+00	.0000E+00
86	.0000E+00	.0000E+00	.1948E+02	.0000E+00	.0000E+00	.0000E+00
87	.0000E+00	.0000E+00	.1771E+02	.0000E+00	.0000E+00	.0000E+00
88	.0000E+00	.0000E+00	.1771E+02	.0000E+00	.0000E+00	.0000E+00
89	.0000E+00	.0000E+00	.1771E+02	.0000E+00	.0000E+00	.0000E+00
90	.0000E+00	.0000E+00	.1771E+02	.0000E+00	.0000E+00	.0000E+00
91	.0000E+00	.0000E+00	.1682E+02	.0000E+00	.0000E+00	.0000E+00
92	.0000E+00	.0000E+00	.1594E+02	.0000E+00	.0000E+00	.0000E+00
93	.0000E+00	.0000E+00	.1505E+02	.0000E+00	.0000E+00	.0000E+00
94	.0000E+00	.0000E+00	.1328E+02	.0000E+00	.0000E+00	.0000E+00
95	.0000E+00	.0000E+00	.1240E+02	.0000E+00	.0000E+00	.0000E+00
96	.0000E+00	.0000E+00	.6198E+01	.0000E+00	.0000E+00	.0000E+00
97	.0000E+00	.0000E+00	.9999E+01	.0000E+00	.0000E+00	.0000E+00
98	.0000E+00	.0000E+00	.1833E+02	.0000E+00	.0000E+00	.0000E+00
99	.0000E+00	.0000E+00	.1667E+02	.0000E+00	.0000E+00	.0000E+00
100	.0000E+00	.0000E+00	.1667E+02	.0000E+00	.0000E+00	.0000E+00
101	.0000E+00	.0000E+00	.1667E+02	.0000E+00	.0000E+00	.0000E+00
102	.0000E+00	.0000E+00	.1667E+02	.0000E+00	.0000E+00	.0000E+00
103	.0000E+00	.0000E+00	.1583E+02	.0000E+00	.0000E+00	.0000E+00
104	.0000E+00	.0000E+00	.1500E+02	.0000E+00	.0000E+00	.0000E+00
105	.0000E+00	.0000E+00	.1417E+02	.0000E+00	.0000E+00	.0000E+00
106	.0000E+00	.0000E+00	.1250E+02	.0000E+00	.0000E+00	.0000E+00
107	.0000E+00	.0000E+00	.1167E+02	.0000E+00	.0000E+00	.0000E+00
108	.0000E+00	.0000E+00	.5833E+01	.0000E+00	.0000E+00	.0000E+00
109	.0000E+00	.0000E+00	.7483E+01	.0000E+00	.0000E+00	.0000E+00
110	.0000E+00	.0000E+00	.1364E+02	.0000E+00	.0000E+00	.0000E+00
111	.0000E+00	.0000E+00	.1231E+02	.0000E+00	.0000E+00	.0000E+00
112	.0000E+00	.0000E+00	.1231E+02	.0000E+00	.0000E+00	.0000E+00
113	.0000E+00	.0000E+00	.1231E+02	.0000E+00	.0000E+00	.0000E+00
114	.0000E+00	.0000E+00	.1231E+02	.0000E+00	.0000E+00	.0000E+00
115	.0000E+00	.0000E+00	.1169E+02	.0000E+00	.0000E+00	.0000E+00

========== I M A G E S 3 D ==========
= Copyright (c) 1984 Celestial Software Inc. =
==========

SOLVE DISPLACEMENTS Version 2.0 07/01/90

L O A D C A S E 1

SELF WEIGHT

APPLIED LOAD VECTOR

Node	Fx	Fy	Fz	Mx	My	Mz
116	.0000E+00	.0000E+00	.1108E+02	.0000E+00	.0000E+00	.0000E+00
117	.0000E+00	.0000E+00	.1046E+02	.0000E+00	.0000E+00	.0000E+00
118	.0000E+00	.0000E+00	.9230E+01	.0000E+00	.0000E+00	.0000E+00
119	.0000E+00	.0000E+00	.8714E+01	.0000E+00	.0000E+00	.0000E+00
120	.0000E+00	.0000E+00	.4407E+01	.0000E+00	.0000E+00	.0000E+00
121	.0000E+00	.0000E+00	.5365E+01	.0000E+00	.0000E+00	.0000E+00
122	.0000E+00	.0000E+00	.9338E+01	.0000E+00	.0000E+00	.0000E+00
123	.0000E+00	.0000E+00	.7947E+01	.0000E+00	.0000E+00	.0000E+00
124	.0000E+00	.0000E+00	.7947E+01	.0000E+00	.0000E+00	.0000E+00
125	.0000E+00	.0000E+00	.7947E+01	.0000E+00	.0000E+00	.0000E+00
126	.0000E+00	.0000E+00	.7947E+01	.0000E+00	.0000E+00	.0000E+00
127	.0000E+00	.0000E+00	.7550E+01	.0000E+00	.0000E+00	.0000E+00
128	.0000E+00	.0000E+00	.7153E+01	.0000E+00	.0000E+00	.0000E+00
129	.0000E+00	.0000E+00	.6755E+01	.0000E+00	.0000E+00	.0000E+00
130	.0000E+00	.0000E+00	.5961E+01	.0000E+00	.0000E+00	.0000E+00
131	.0000E+00	.0000E+00	.6159E+01	.0000E+00	.0000E+00	.0000E+00
132	.0000E+00	.0000E+00	.3378E+01	.0000E+00	.0000E+00	.0000E+00
133	.0000E+00	.0000E+00	.5961E+01	.0000E+00	.0000E+00	.0000E+00
134	.0000E+00	.0000E+00	.9934E+01	.0000E+00	.0000E+00	.0000E+00
135	.0000E+00	.0000E+00	.7947E+01	.0000E+00	.0000E+00	.0000E+00
136	.0000E+00	.0000E+00	.7947E+01	.0000E+00	.0000E+00	.0000E+00
137	.0000E+00	.0000E+00	.7947E+01	.0000E+00	.0000E+00	.0000E+00
138	.0000E+00	.0000E+00	.7947E+01	.0000E+00	.0000E+00	.0000E+00
139	.0000E+00	.0000E+00	.7550E+01	.0000E+00	.0000E+00	.0000E+00
140	.0000E+00	.0000E+00	.7153E+01	.0000E+00	.0000E+00	.0000E+00
141	.0000E+00	.0000E+00	.6755E+01	.0000E+00	.0000E+00	.0000E+00
142	.0000E+00	.0000E+00	.5961E+01	.0000E+00	.0000E+00	.0000E+00
143	.0000E+00	.0000E+00	.6755E+01	.0000E+00	.0000E+00	.0000E+00
144	.0000E+00	.0000E+00	.3974E+01	.0000E+00	.0000E+00	.0000E+00
145	.0000E+00	.0000E+00	.6557E+01	.0000E+00	.0000E+00	.0000E+00
146	.0000E+00	.0000E+00	.1053E+02	.0000E+00	.0000E+00	.0000E+00
147	.0000E+00	.0000E+00	.7947E+01	.0000E+00	.0000E+00	.0000E+00
148	.0000E+00	.0000E+00	.7947E+01	.0000E+00	.0000E+00	.0000E+00
149	.0000E+00	.0000E+00	.7947E+01	.0000E+00	.0000E+00	.0000E+00
150	.0000E+00	.0000E+00	.7947E+01	.0000E+00	.0000E+00	.0000E+00
151	.0000E+00	.0000E+00	.7550E+01	.0000E+00	.0000E+00	.0000E+00
152	.0000E+00	.0000E+00	.7153E+01	.0000E+00	.0000E+00	.0000E+00
153	.0000E+00	.0000E+00	.6755E+01	.0000E+00	.0000E+00	.0000E+00
154	.0000E+00	.0000E+00	.5961E+01	.0000E+00	.0000E+00	.0000E+00
155	.0000E+00	.0000E+00	.7351E+01	.0000E+00	.0000E+00	.0000E+00

========== I M A G E S 3 D ==========
= Copyright (c) 1984 Celestial Software Inc. =
==========

SOLVE DISPLACEMENTS Version 2.0 07/01/90

L O A D C A S E 1

SELF WEIGHT

APPLIED LOAD VECTOR

Node	Fx	Fy	Fz	Mx	My	Mz
156	.0000E+00	.0000E+00	.4570E+01	.0000E+00	.0000E+00	.0000E+00
157	.0000E+00	.0000E+00	.3477E+01	.0000E+00	.0000E+00	.0000E+00
158	.0000E+00	.0000E+00	.5464E+01	.0000E+00	.0000E+00	.0000E+00
159	.0000E+00	.0000E+00	.3974E+01	.0000E+00	.0000E+00	.0000E+00
160	.0000E+00	.0000E+00	.3974E+01	.0000E+00	.0000E+00	.0000E+00
161	.0000E+00	.0000E+00	.3974E+01	.0000E+00	.0000E+00	.0000E+00
162	.0000E+00	.0000E+00	.3974E+01	.0000E+00	.0000E+00	.0000E+00
163	.0000E+00	.0000E+00	.3775E+01	.0000E+00	.0000E+00	.0000E+00
164	.0000E+00	.0000E+00	.3576E+01	.0000E+00	.0000E+00	.0000E+00
165	.0000E+00	.0000E+00	.3378E+01	.0000E+00	.0000E+00	.0000E+00
166	.0000E+00	.0000E+00	.2980E+01	.0000E+00	.0000E+00	.0000E+00
167	.0000E+00	.0000E+00	.3874E+01	.0000E+00	.0000E+00	.0000E+00
168	.0000E+00	.0000E+00	.2484E+01	.0000E+00	.0000E+00	.0000E+00

```
============== I M A G E S  3 D ==============
= Copyright (c) 1984   Celestial Software Inc. =
===============================================
```

SOLVE DISPLACEMENTS Version 2.0 07/01/90

L O A D C A S E 2

SEISMIC SOIL PRESSURE

APPLIED LOAD VECTOR

Node	Fx	Fy	Fz	Mx	My	Mz
1	.0000E+00	.0000E+00	.2656E+01	.0000E+00	.0000E+00	.0000E+00
2	.0000E+00	.0000E+00	.4870E+01	.0000E+00	.0000E+00	.0000E+00
3	.0000E+00	.0000E+00	.4427E+01	.0000E+00	.0000E+00	.0000E+00
4	.0000E+00	.0000E+00	.4427E+01	.0000E+00	.0000E+00	.0000E+00
5	.0000E+00	.0000E+00	.4427E+01	.0000E+00	.0000E+00	.0000E+00
6	.0000E+00	.0000E+00	.4427E+01	.0000E+00	.0000E+00	.0000E+00
7	.0000E+00	.0000E+00	.4206E+01	.0000E+00	.0000E+00	.0000E+00
8	.0000E+00	.0000E+00	.3984E+01	.0000E+00	.0000E+00	.0000E+00
9	.0000E+00	.0000E+00	.3763E+01	.0000E+00	.0000E+00	.0000E+00
10	.0000E+00	.0000E+00	.3320E+01	.0000E+00	.0000E+00	.0000E+00
11	.0000E+00	.0000E+00	.3099E+01	.0000E+00	.0000E+00	.0000E+00
12	.0000E+00	.0000E+00	.1549E+01	.0000E+00	.0000E+00	.0000E+00
13	.0000E+00	.0000E+00	.1594E+02	.0000E+00	.0000E+00	.0000E+00
14	.0000E+00	.0000E+00	.2922E+02	.0000E+00	.0000E+00	.0000E+00
15	.0000E+00	.0000E+00	.2656E+02	.0000E+00	.0000E+00	.0000E+00
16	.0000E+00	.0000E+00	.2656E+02	.0000E+00	.0000E+00	.0000E+00
17	.0000E+00	.0000E+00	.2656E+02	.0000E+00	.0000E+00	.0000E+00
18	.0000E+00	.0000E+00	.2656E+02	.0000E+00	.0000E+00	.0000E+00
19	.0000E+00	.0000E+00	.2523E+02	.0000E+00	.0000E+00	.0000E+00
20	.0000E+00	.0000E+00	.2391E+02	.0000E+00	.0000E+00	.0000E+00
21	.0000E+00	.0000E+00	.2258E+02	.0000E+00	.0000E+00	.0000E+00
22	.0000E+00	.0000E+00	.1992E+02	.0000E+00	.0000E+00	.0000E+00
23	.0000E+00	.0000E+00	.1859E+02	.0000E+00	.0000E+00	.0000E+00
24	.0000E+00	.0000E+00	.9297E+01	.0000E+00	.0000E+00	.0000E+00
25	.0000E+00	.0000E+00	.3188E+02	.0000E+00	.0000E+00	.0000E+00
26	.0000E+00	.0000E+00	.5844E+02	.0000E+00	.0000E+00	.0000E+00
27	.0000E+00	.0000E+00	.5313E+02	.0000E+00	.0000E+00	.0000E+00
28	.0000E+00	.0000E+00	.5313E+02	.0000E+00	.0000E+00	.0000E+00
29	.0000E+00	.0000E+00	.5313E+02	.0000E+00	.0000E+00	.0000E+00
30	.0000E+00	.0000E+00	.5313E+02	.0000E+00	.0000E+00	.0000E+00
31	.0000E+00	.0000E+00	.5047E+02	.0000E+00	.0000E+00	.0000E+00
32	.0000E+00	.0000E+00	.4781E+02	.0000E+00	.0000E+00	.0000E+00
33	.0000E+00	.0000E+00	.4516E+02	.0000E+00	.0000E+00	.0000E+00
34	.0000E+00	.0000E+00	.3984E+02	.0000E+00	.0000E+00	.0000E+00
35	.0000E+00	.0000E+00	.3719E+02	.0000E+00	.0000E+00	.0000E+00

========== I M A G E S 3 D ==========
= Copyright (c) 1984 Celestial Software Inc. =
==========

SOLVE DISPLACEMENTS Version 2.0 07/01/90

L O A D C A S E 2

SEISMIC SOIL PRESSURE

APPLIED LOAD VECTOR

Node	Fx	Fy	Fz	Mx	My	Mz
36	.0000E+00	.0000E+00	.1859E+02	.0000E+00	.0000E+00	.0000E+00
37	.0000E+00	.0000E+00	.4781E+02	.0000E+00	.0000E+00	.0000E+00
38	.0000E+00	.0000E+00	.8766E+02	.0000E+00	.0000E+00	.0000E+00
39	.0000E+00	.0000E+00	.7969E+02	.0000E+00	.0000E+00	.0000E+00
40	.0000E+00	.0000E+00	.7969E+02	.0000E+00	.0000E+00	.0000E+00
41	.0000E+00	.0000E+00	.7969E+02	.0000E+00	.0000E+00	.0000E+00
42	.0000E+00	.0000E+00	.7969E+02	.0000E+00	.0000E+00	.0000E+00
43	.0000E+00	.0000E+00	.7570E+02	.0000E+00	.0000E+00	.0000E+00
44	.0000E+00	.0000E+00	.7172E+02	.0000E+00	.0000E+00	.0000E+00
45	.0000E+00	.0000E+00	.6773E+02	.0000E+00	.0000E+00	.0000E+00
46	.0000E+00	.0000E+00	.5977E+02	.0000E+00	.0000E+00	.0000E+00
47	.0000E+00	.0000E+00	.5578E+02	.0000E+00	.0000E+00	.0000E+00
48	.0000E+00	.0000E+00	.2789E+02	.0000E+00	.0000E+00	.0000E+00
49	.0000E+00	.0000E+00	.6375E+02	.0000E+00	.0000E+00	.0000E+00
50	.0000E+00	.0000E+00	.1169E+03	.0000E+00	.0000E+00	.0000E+00
51	.0000E+00	.0000E+00	.1063E+03	.0000E+00	.0000E+00	.0000E+00
52	.0000E+00	.0000E+00	.1063E+03	.0000E+00	.0000E+00	.0000E+00
53	.0000E+00	.0000E+00	.1063E+03	.0000E+00	.0000E+00	.0000E+00
54	.0000E+00	.0000E+00	.1063E+03	.0000E+00	.0000E+00	.0000E+00
55	.0000E+00	.0000E+00	.1009E+03	.0000E+00	.0000E+00	.0000E+00
56	.0000E+00	.0000E+00	.9563E+02	.0000E+00	.0000E+00	.0000E+00
57	.0000E+00	.0000E+00	.9031E+02	.0000E+00	.0000E+00	.0000E+00
58	.0000E+00	.0000E+00	.7969E+02	.0000E+00	.0000E+00	.0000E+00
59	.0000E+00	.0000E+00	.7438E+02	.0000E+00	.0000E+00	.0000E+00
60	.0000E+00	.0000E+00	.3719E+02	.0000E+00	.0000E+00	.0000E+00
61	.0000E+00	.0000E+00	.7520E+02	.0000E+00	.0000E+00	.0000E+00
62	.0000E+00	.0000E+00	.1379E+03	.0000E+00	.0000E+00	.0000E+00
63	.0000E+00	.0000E+00	.1253E+03	.0000E+00	.0000E+00	.0000E+00
64	.0000E+00	.0000E+00	.1253E+03	.0000E+00	.0000E+00	.0000E+00
65	.0000E+00	.0000E+00	.1253E+03	.0000E+00	.0000E+00	.0000E+00
66	.0000E+00	.0000E+00	.1253E+03	.0000E+00	.0000E+00	.0000E+00
67	.0000E+00	.0000E+00	.1191E+03	.0000E+00	.0000E+00	.0000E+00
68	.0000E+00	.0000E+00	.1128E+03	.0000E+00	.0000E+00	.0000E+00
69	.0000E+00	.0000E+00	.1065E+03	.0000E+00	.0000E+00	.0000E+00
70	.0000E+00	.0000E+00	.9400E+02	.0000E+00	.0000E+00	.0000E+00
71	.0000E+00	.0000E+00	.8773E+02	.0000E+00	.0000E+00	.0000E+00
72	.0000E+00	.0000E+00	.4387E+02	.0000E+00	.0000E+00	.0000E+00
73	.0000E+00	.0000E+00	.8463E+02	.0000E+00	.0000E+00	.0000E+00
74	.0000E+00	.0000E+00	.1552E+03	.0000E+00	.0000E+00	.0000E+00
75	.0000E+00	.0000E+00	.1410E+03	.0000E+00	.0000E+00	.0000E+00

========== I M A G E S 3 D ==========
= Copyright (c) 1984 Celestial Software Inc. =
==========

SOLVE DISPLACEMENTS Version 2.0 07/01/90

L O A D C A S E 2
SEISMIC SOIL PRESSURE

APPLIED LOAD VECTOR

Node	Fx	Fy	Fz	Mx	My	Mz
76	.0000E+00	.0000E+00	.1410E+03	.0000E+00	.0000E+00	.0000E+00
77	.0000E+00	.0000E+00	.1410E+03	.0000E+00	.0000E+00	.0000E+00
78	.0000E+00	.0000E+00	.1410E+03	.0000E+00	.0000E+00	.0000E+00
79	.0000E+00	.0000E+00	.1340E+03	.0000E+00	.0000E+00	.0000E+00
80	.0000E+00	.0000E+00	.1269E+03	.0000E+00	.0000E+00	.0000E+00
81	.0000E+00	.0000E+00	.1199E+03	.0000E+00	.0000E+00	.0000E+00
82	.0000E+00	.0000E+00	.1058E+03	.0000E+00	.0000E+00	.0000E+00
83	.0000E+00	.0000E+00	.9873E+02	.0000E+00	.0000E+00	.0000E+00
84	.0000E+00	.0000E+00	.4937E+02	.0000E+00	.0000E+00	.0000E+00
85	.0000E+00	.0000E+00	.9167E+02	.0000E+00	.0000E+00	.0000E+00
86	.0000E+00	.0000E+00	.1681E+03	.0000E+00	.0000E+00	.0000E+00
87	.0000E+00	.0000E+00	.1528E+03	.0000E+00	.0000E+00	.0000E+00
88	.0000E+00	.0000E+00	.1528E+03	.0000E+00	.0000E+00	.0000E+00
89	.0000E+00	.0000E+00	.1528E+03	.0000E+00	.0000E+00	.0000E+00
90	.0000E+00	.0000E+00	.1528E+03	.0000E+00	.0000E+00	.0000E+00
91	.0000E+00	.0000E+00	.1451E+03	.0000E+00	.0000E+00	.0000E+00
92	.0000E+00	.0000E+00	.1375E+03	.0000E+00	.0000E+00	.0000E+00
93	.0000E+00	.0000E+00	.1299E+03	.0000E+00	.0000E+00	.0000E+00
94	.0000E+00	.0000E+00	.1146E+03	.0000E+00	.0000E+00	.0000E+00
95	.0000E+00	.0000E+00	.1069E+03	.0000E+00	.0000E+00	.0000E+00
96	.0000E+00	.0000E+00	.5347E+02	.0000E+00	.0000E+00	.0000E+00
97	.0000E+00	.0000E+00	.9690E+02	.0000E+00	.0000E+00	.0000E+00
98	.0000E+00	.0000E+00	.1776E+03	.0000E+00	.0000E+00	.0000E+00
99	.0000E+00	.0000E+00	.1615E+03	.0000E+00	.0000E+00	.0000E+00
100	.0000E+00	.0000E+00	.1615E+03	.0000E+00	.0000E+00	.0000E+00
101	.0000E+00	.0000E+00	.1615E+03	.0000E+00	.0000E+00	.0000E+00
102	.0000E+00	.0000E+00	.1615E+03	.0000E+00	.0000E+00	.0000E+00
103	.0000E+00	.0000E+00	.1534E+03	.0000E+00	.0000E+00	.0000E+00
104	.0000E+00	.0000E+00	.1453E+03	.0000E+00	.0000E+00	.0000E+00
105	.0000E+00	.0000E+00	.1373E+03	.0000E+00	.0000E+00	.0000E+00
106	.0000E+00	.0000E+00	.1211E+03	.0000E+00	.0000E+00	.0000E+00
107	.0000E+00	.0000E+00	.1130E+03	.0000E+00	.0000E+00	.0000E+00
108	.0000E+00	.0000E+00	.5652E+02	.0000E+00	.0000E+00	.0000E+00
109	.0000E+00	.0000E+00	.9470E+02	.0000E+00	.0000E+00	.0000E+00
110	.0000E+00	.0000E+00	.1722E+03	.0000E+00	.0000E+00	.0000E+00
111	.0000E+00	.0000E+00	.1549E+03	.0000E+00	.0000E+00	.0000E+00
112	.0000E+00	.0000E+00	.1549E+03	.0000E+00	.0000E+00	.0000E+00
113	.0000E+00	.0000E+00	.1549E+03	.0000E+00	.0000E+00	.0000E+00
114	.0000E+00	.0000E+00	.1549E+03	.0000E+00	.0000E+00	.0000E+00
115	.0000E+00	.0000E+00	.1472E+03	.0000E+00	.0000E+00	.0000E+00

========== I M A G E S 3 D ==========
= Copyright (c) 1984 Celestial Software Inc. =
==========

SOLVE DISPLACEMENTS Version 2.0 07/01/90

L O A D C A S E 2
SEISMIC SOIL PRESSURE

APPLIED LOAD VECTOR

Node	Fx	Fy	Fz	Mx	My	Mz
116	.0000E+00	.0000E+00	.1395E+03	.0000E+00	.0000E+00	.0000E+00
117	.0000E+00	.0000E+00	.1317E+03	.0000E+00	.0000E+00	.0000E+00
118	.0000E+00	.0000E+00	.1162E+03	.0000E+00	.0000E+00	.0000E+00
119	.0000E+00	.0000E+00	.1102E+03	.0000E+00	.0000E+00	.0000E+00
120	.0000E+00	.0000E+00	.5596E+02	.0000E+00	.0000E+00	.0000E+00
121	.0000E+00	.0000E+00	.9694E+02	.0000E+00	.0000E+00	.0000E+00
122	.0000E+00	.0000E+00	.1687E+03	.0000E+00	.0000E+00	.0000E+00
123	.0000E+00	.0000E+00	.1434E+03	.0000E+00	.0000E+00	.0000E+00
124	.0000E+00	.0000E+00	.1434E+03	.0000E+00	.0000E+00	.0000E+00
125	.0000E+00	.0000E+00	.1434E+03	.0000E+00	.0000E+00	.0000E+00
126	.0000E+00	.0000E+00	.1434E+03	.0000E+00	.0000E+00	.0000E+00
127	.0000E+00	.0000E+00	.1363E+03	.0000E+00	.0000E+00	.0000E+00
128	.0000E+00	.0000E+00	.1291E+03	.0000E+00	.0000E+00	.0000E+00
129	.0000E+00	.0000E+00	.1219E+03	.0000E+00	.0000E+00	.0000E+00
130	.0000E+00	.0000E+00	.1076E+03	.0000E+00	.0000E+00	.0000E+00
131	.0000E+00	.0000E+00	.1113E+03	.0000E+00	.0000E+00	.0000E+00
132	.0000E+00	.0000E+00	.6108E+02	.0000E+00	.0000E+00	.0000E+00
133	.0000E+00	.0000E+00	.5433E+02	.0000E+00	.0000E+00	.0000E+00
134	.0000E+00	.0000E+00	.9178E+02	.0000E+00	.0000E+00	.0000E+00
135	.0000E+00	.0000E+00	.7491E+02	.0000E+00	.0000E+00	.0000E+00
136	.0000E+00	.0000E+00	.7491E+02	.0000E+00	.0000E+00	.0000E+00
137	.0000E+00	.0000E+00	.7491E+02	.0000E+00	.0000E+00	.0000E+00
138	.0000E+00	.0000E+00	.7491E+02	.0000E+00	.0000E+00	.0000E+00
139	.0000E+00	.0000E+00	.7116E+02	.0000E+00	.0000E+00	.0000E+00
140	.0000E+00	.0000E+00	.6742E+02	.0000E+00	.0000E+00	.0000E+00
141	.0000E+00	.0000E+00	.6367E+02	.0000E+00	.0000E+00	.0000E+00
142	.0000E+00	.0000E+00	.5618E+02	.0000E+00	.0000E+00	.0000E+00
143	.0000E+00	.0000E+00	.6182E+02	.0000E+00	.0000E+00	.0000E+00
144	.0000E+00	.0000E+00	.3560E+02	.0000E+00	.0000E+00	.0000E+00

========== I M A G E S 3 D ==========
= Copyright (c) 1984 Celestial Software Inc. =
==========

SOLVE DISPLACEMENTS Version 2.0 07/01/90

L O A D C A S E 3
LATERAL EARTH PRESSURE

APPLIED LOAD VECTOR

Node	Fx	Fy	Fz	Mx	My	Mz
1	.0000E+00	.0000E+00	.4662E+02	.0000E+00	.0000E+00	.0000E+00
2	.0000E+00	.0000E+00	.8548E+02	.0000E+00	.0000E+00	.0000E+00
3	.0000E+00	.0000E+00	.7770E+02	.0000E+00	.0000E+00	.0000E+00
4	.0000E+00	.0000E+00	.7770E+02	.0000E+00	.0000E+00	.0000E+00
5	.0000E+00	.0000E+00	.7770E+02	.0000E+00	.0000E+00	.0000E+00
6	.0000E+00	.0000E+00	.7770E+02	.0000E+00	.0000E+00	.0000E+00
7	.0000E+00	.0000E+00	.7382E+02	.0000E+00	.0000E+00	.0000E+00
8	.0000E+00	.0000E+00	.6993E+02	.0000E+00	.0000E+00	.0000E+00
9	.0000E+00	.0000E+00	.6605E+02	.0000E+00	.0000E+00	.0000E+00
10	.0000E+00	.0000E+00	.5828E+02	.0000E+00	.0000E+00	.0000E+00
11	.0000E+00	.0000E+00	.5439E+02	.0000E+00	.0000E+00	.0000E+00
12	.0000E+00	.0000E+00	.2720E+02	.0000E+00	.0000E+00	.0000E+00
13	.0000E+00	.0000E+00	.8654E+02	.0000E+00	.0000E+00	.0000E+00
14	.0000E+00	.0000E+00	.1587E+03	.0000E+00	.0000E+00	.0000E+00
15	.0000E+00	.0000E+00	.1442E+03	.0000E+00	.0000E+00	.0000E+00
16	.0000E+00	.0000E+00	.1442E+03	.0000E+00	.0000E+00	.0000E+00
17	.0000E+00	.0000E+00	.1442E+03	.0000E+00	.0000E+00	.0000E+00
18	.0000E+00	.0000E+00	.1442E+03	.0000E+00	.0000E+00	.0000E+00
19	.0000E+00	.0000E+00	.1370E+03	.0000E+00	.0000E+00	.0000E+00
20	.0000E+00	.0000E+00	.1298E+03	.0000E+00	.0000E+00	.0000E+00
21	.0000E+00	.0000E+00	.1226E+03	.0000E+00	.0000E+00	.0000E+00
22	.0000E+00	.0000E+00	.1082E+03	.0000E+00	.0000E+00	.0000E+00
23	.0000E+00	.0000E+00	.1010E+03	.0000E+00	.0000E+00	.0000E+00
24	.0000E+00	.0000E+00	.5048E+02	.0000E+00	.0000E+00	.0000E+00
25	.0000E+00	.0000E+00	.7647E+02	.0000E+00	.0000E+00	.0000E+00
26	.0000E+00	.0000E+00	.1402E+03	.0000E+00	.0000E+00	.0000E+00
27	.0000E+00	.0000E+00	.1275E+03	.0000E+00	.0000E+00	.0000E+00
28	.0000E+00	.0000E+00	.1275E+03	.0000E+00	.0000E+00	.0000E+00
29	.0000E+00	.0000E+00	.1275E+03	.0000E+00	.0000E+00	.0000E+00
30	.0000E+00	.0000E+00	.1275E+03	.0000E+00	.0000E+00	.0000E+00
31	.0000E+00	.0000E+00	.1211E+03	.0000E+00	.0000E+00	.0000E+00
32	.0000E+00	.0000E+00	.1147E+03	.0000E+00	.0000E+00	.0000E+00
33	.0000E+00	.0000E+00	.1083E+03	.0000E+00	.0000E+00	.0000E+00
34	.0000E+00	.0000E+00	.9559E+02	.0000E+00	.0000E+00	.0000E+00
35	.0000E+00	.0000E+00	.8922E+02	.0000E+00	.0000E+00	.0000E+00

========== I M A G E S 3 D ==========
= Copyright (c) 1984 Celestial Software Inc. =
==========

SOLVE DISPLACEMENTS Version 2.0 07/01/90

L O A D C A S E 3

LATERAL EARTH PRESSURE

APPLIED LOAD VECTOR

Node	Fx	Fy	Fz	Mx	My	Mz
36	.0000E+00	.0000E+00	.4461E+02	.0000E+00	.0000E+00	.0000E+00
37	.0000E+00	.0000E+00	.6641E+02	.0000E+00	.0000E+00	.0000E+00
38	.0000E+00	.0000E+00	.1218E+03	.0000E+00	.0000E+00	.0000E+00
39	.0000E+00	.0000E+00	.1107E+03	.0000E+00	.0000E+00	.0000E+00
40	.0000E+00	.0000E+00	.1107E+03	.0000E+00	.0000E+00	.0000E+00
41	.0000E+00	.0000E+00	.1107E+03	.0000E+00	.0000E+00	.0000E+00
42	.0000E+00	.0000E+00	.1107E+03	.0000E+00	.0000E+00	.0000E+00
43	.0000E+00	.0000E+00	.1052E+03	.0000E+00	.0000E+00	.0000E+00
44	.0000E+00	.0000E+00	.9962E+02	.0000E+00	.0000E+00	.0000E+00
45	.0000E+00	.0000E+00	.9408E+02	.0000E+00	.0000E+00	.0000E+00
46	.0000E+00	.0000E+00	.8302E+02	.0000E+00	.0000E+00	.0000E+00
47	.0000E+00	.0000E+00	.7748E+02	.0000E+00	.0000E+00	.0000E+00
48	.0000E+00	.0000E+00	.3874E+02	.0000E+00	.0000E+00	.0000E+00
49	.0000E+00	.0000E+00	.5635E+02	.0000E+00	.0000E+00	.0000E+00
50	.0000E+00	.0000E+00	.1033E+03	.0000E+00	.0000E+00	.0000E+00
51	.0000E+00	.0000E+00	.9392E+02	.0000E+00	.0000E+00	.0000E+00
52	.0000E+00	.0000E+00	.9392E+02	.0000E+00	.0000E+00	.0000E+00
53	.0000E+00	.0000E+00	.9392E+02	.0000E+00	.0000E+00	.0000E+00
54	.0000E+00	.0000E+00	.9392E+02	.0000E+00	.0000E+00	.0000E+00
55	.0000E+00	.0000E+00	.8922E+02	.0000E+00	.0000E+00	.0000E+00
56	.0000E+00	.0000E+00	.8453E+02	.0000E+00	.0000E+00	.0000E+00
57	.0000E+00	.0000E+00	.7983E+02	.0000E+00	.0000E+00	.0000E+00
58	.0000E+00	.0000E+00	.7044E+02	.0000E+00	.0000E+00	.0000E+00
59	.0000E+00	.0000E+00	.6574E+02	.0000E+00	.0000E+00	.0000E+00
60	.0000E+00	.0000E+00	.3287E+02	.0000E+00	.0000E+00	.0000E+00
61	.0000E+00	.0000E+00	.4429E+02	.0000E+00	.0000E+00	.0000E+00
62	.0000E+00	.0000E+00	.8120E+02	.0000E+00	.0000E+00	.0000E+00
63	.0000E+00	.0000E+00	.7382E+02	.0000E+00	.0000E+00	.0000E+00
64	.0000E+00	.0000E+00	.7382E+02	.0000E+00	.0000E+00	.0000E+00
65	.0000E+00	.0000E+00	.7382E+02	.0000E+00	.0000E+00	.0000E+00
66	.0000E+00	.0000E+00	.7382E+02	.0000E+00	.0000E+00	.0000E+00
67	.0000E+00	.0000E+00	.7013E+02	.0000E+00	.0000E+00	.0000E+00
68	.0000E+00	.0000E+00	.6644E+02	.0000E+00	.0000E+00	.0000E+00
69	.0000E+00	.0000E+00	.6275E+02	.0000E+00	.0000E+00	.0000E+00
70	.0000E+00	.0000E+00	.5536E+02	.0000E+00	.0000E+00	.0000E+00
71	.0000E+00	.0000E+00	.5167E+02	.0000E+00	.0000E+00	.0000E+00
72	.0000E+00	.0000E+00	.2584E+02	.0000E+00	.0000E+00	.0000E+00
73	.0000E+00	.0000E+00	.3351E+02	.0000E+00	.0000E+00	.0000E+00
74	.0000E+00	.0000E+00	.6143E+02	.0000E+00	.0000E+00	.0000E+00
75	.0000E+00	.0000E+00	.5585E+02	.0000E+00	.0000E+00	.0000E+00

========== I M A G E S 3 D ==========
= Copyright (c) 1984 Celestial Software Inc. =
==========

SOLVE DISPLACEMENTS Version 2.0 07/01/90

L O A D C A S E 3
LATERAL EARTH PRESSURE

APPLIED LOAD VECTOR

Node	Fx	Fy	Fz	Mx	My	Mz
76	.0000E+00	.0000E+00	.5585E+02	.0000E+00	.0000E+00	.0000E+00
77	.0000E+00	.0000E+00	.5585E+02	.0000E+00	.0000E+00	.0000E+00
78	.0000E+00	.0000E+00	.5585E+02	.0000E+00	.0000E+00	.0000E+00
79	.0000E+00	.0000E+00	.5305E+02	.0000E+00	.0000E+00	.0000E+00
80	.0000E+00	.0000E+00	.5026E+02	.0000E+00	.0000E+00	.0000E+00
81	.0000E+00	.0000E+00	.4747E+02	.0000E+00	.0000E+00	.0000E+00
82	.0000E+00	.0000E+00	.4189E+02	.0000E+00	.0000E+00	.0000E+00
83	.0000E+00	.0000E+00	.3909E+02	.0000E+00	.0000E+00	.0000E+00
84	.0000E+00	.0000E+00	.1955E+02	.0000E+00	.0000E+00	.0000E+00
85	.0000E+00	.0000E+00	.2423E+02	.0000E+00	.0000E+00	.0000E+00
86	.0000E+00	.0000E+00	.4443E+02	.0000E+00	.0000E+00	.0000E+00
87	.0000E+00	.0000E+00	.4039E+02	.0000E+00	.0000E+00	.0000E+00
88	.0000E+00	.0000E+00	.4039E+02	.0000E+00	.0000E+00	.0000E+00
89	.0000E+00	.0000E+00	.4039E+02	.0000E+00	.0000E+00	.0000E+00
90	.0000E+00	.0000E+00	.4039E+02	.0000E+00	.0000E+00	.0000E+00
91	.0000E+00	.0000E+00	.3837E+02	.0000E+00	.0000E+00	.0000E+00
92	.0000E+00	.0000E+00	.3635E+02	.0000E+00	.0000E+00	.0000E+00
93	.0000E+00	.0000E+00	.3433E+02	.0000E+00	.0000E+00	.0000E+00
94	.0000E+00	.0000E+00	.3029E+02	.0000E+00	.0000E+00	.0000E+00
95	.0000E+00	.0000E+00	.2827E+02	.0000E+00	.0000E+00	.0000E+00
96	.0000E+00	.0000E+00	.1414E+02	.0000E+00	.0000E+00	.0000E+00
97	.0000E+00	.0000E+00	.1610E+02	.0000E+00	.0000E+00	.0000E+00
98	.0000E+00	.0000E+00	.2952E+02	.0000E+00	.0000E+00	.0000E+00
99	.0000E+00	.0000E+00	.2683E+02	.0000E+00	.0000E+00	.0000E+00
100	.0000E+00	.0000E+00	.2683E+02	.0000E+00	.0000E+00	.0000E+00
101	.0000E+00	.0000E+00	.2683E+02	.0000E+00	.0000E+00	.0000E+00
102	.0000E+00	.0000E+00	.2683E+02	.0000E+00	.0000E+00	.0000E+00
103	.0000E+00	.0000E+00	.2549E+02	.0000E+00	.0000E+00	.0000E+00
104	.0000E+00	.0000E+00	.2415E+02	.0000E+00	.0000E+00	.0000E+00
105	.0000E+00	.0000E+00	.2281E+02	.0000E+00	.0000E+00	.0000E+00
106	.0000E+00	.0000E+00	.2013E+02	.0000E+00	.0000E+00	.0000E+00
107	.0000E+00	.0000E+00	.1878E+02	.0000E+00	.0000E+00	.0000E+00
108	.0000E+00	.0000E+00	.9392E+01	.0000E+00	.0000E+00	.0000E+00
109	.0000E+00	.0000E+00	.9035E+01	.0000E+00	.0000E+00	.0000E+00
110	.0000E+00	.0000E+00	.1647E+02	.0000E+00	.0000E+00	.0000E+00
111	.0000E+00	.0000E+00	.1487E+02	.0000E+00	.0000E+00	.0000E+00
112	.0000E+00	.0000E+00	.1487E+02	.0000E+00	.0000E+00	.0000E+00
113	.0000E+00	.0000E+00	.1487E+02	.0000E+00	.0000E+00	.0000E+00
114	.0000E+00	.0000E+00	.1487E+02	.0000E+00	.0000E+00	.0000E+00
115	.0000E+00	.0000E+00	.1413E+02	.0000E+00	.0000E+00	.0000E+00

```
============== I M A G E S  3 D ==============
= Copyright (c) 1984   Celestial Software Inc. =
===============================================
```

SOLVE DISPLACEMENTS Version 2.0 07/01/90

L O A D C A S E 3

LATERAL EARTH PRESSURE

APPLIED LOAD VECTOR

Node	Fx	Fy	Fz	Mx	My	Mz
116	.0000E+00	.0000E+00	.1338E+02	.0000E+00	.0000E+00	.0000E+00
117	.0000E+00	.0000E+00	.1264E+02	.0000E+00	.0000E+00	.0000E+00
118	.0000E+00	.0000E+00	.1115E+02	.0000E+00	.0000E+00	.0000E+00
119	.0000E+00	.0000E+00	.1052E+02	.0000E+00	.0000E+00	.0000E+00
120	.0000E+00	.0000E+00	.5318E+01	.0000E+00	.0000E+00	.0000E+00
121	.0000E+00	.0000E+00	.4000E+01	.0000E+00	.0000E+00	.0000E+00
122	.0000E+00	.0000E+00	.7019E+01	.0000E+00	.0000E+00	.0000E+00
123	.0000E+00	.0000E+00	.6038E+01	.0000E+00	.0000E+00	.0000E+00
124	.0000E+00	.0000E+00	.6038E+01	.0000E+00	.0000E+00	.0000E+00
125	.0000E+00	.0000E+00	.6038E+01	.0000E+00	.0000E+00	.0000E+00
126	.0000E+00	.0000E+00	.6038E+01	.0000E+00	.0000E+00	.0000E+00
127	.0000E+00	.0000E+00	.5736E+01	.0000E+00	.0000E+00	.0000E+00
128	.0000E+00	.0000E+00	.5434E+01	.0000E+00	.0000E+00	.0000E+00
129	.0000E+00	.0000E+00	.5132E+01	.0000E+00	.0000E+00	.0000E+00
130	.0000E+00	.0000E+00	.4528E+01	.0000E+00	.0000E+00	.0000E+00
131	.0000E+00	.0000E+00	.4604E+01	.0000E+00	.0000E+00	.0000E+00
132	.0000E+00	.0000E+00	.2490E+01	.0000E+00	.0000E+00	.0000E+00
133	.0000E+00	.0000E+00	.7170E+00	.0000E+00	.0000E+00	.0000E+00
134	.0000E+00	.0000E+00	.1220E+01	.0000E+00	.0000E+00	.0000E+00
135	.0000E+00	.0000E+00	.1006E+01	.0000E+00	.0000E+00	.0000E+00
136	.0000E+00	.0000E+00	.1006E+01	.0000E+00	.0000E+00	.0000E+00
137	.0000E+00	.0000E+00	.1006E+01	.0000E+00	.0000E+00	.0000E+00
138	.0000E+00	.0000E+00	.1006E+01	.0000E+00	.0000E+00	.0000E+00
139	.0000E+00	.0000E+00	.9559E+00	.0000E+00	.0000E+00	.0000E+00
140	.0000E+00	.0000E+00	.9056E+00	.0000E+00	.0000E+00	.0000E+00
141	.0000E+00	.0000E+00	.8553E+00	.0000E+00	.0000E+00	.0000E+00
142	.0000E+00	.0000E+00	.7547E+00	.0000E+00	.0000E+00	.0000E+00
143	.0000E+00	.0000E+00	.8176E+00	.0000E+00	.0000E+00	.0000E+00
144	.0000E+00	.0000E+00	.4654E+00	.0000E+00	.0000E+00	.0000E+00

```
============== I M A G E S  3 D ==============
= Copyright (c) 1984   Celestial Software Inc. =
===============================================
```

SOLVE DISPLACEMENTS Version 2.0 07/01/90

L O A D C A S E 4

SEISMIC COVER BLOCK LOAD

APPLIED LOAD VECTOR

Node	Fx	Fy	Fz	Mx	My	Mz
109	.0000E+00	-.5850E+03	.0000E+00	.0000E+00	.0000E+00	.0000E+00
115	.0000E+00	-.1016E+04	.0000E+00	.0000E+00	.0000E+00	.0000E+00
120	.0000E+00	-.4310E+03	.0000E+00	.0000E+00	.0000E+00	.0000E+00

```
============== I M A G E S  3 D ==============
= Copyright (c) 1984   Celestial Software Inc. =
===============================================
```

SOLVE DISPLACEMENTS Version 2.0 07/01/90

L O A D C A S E 5

OVERBURDEN PRESSURE

APPLIED LOAD VECTOR

Node	Fx	Fy	Fz	Mx	My	Mz
1	.0000E+00	.0000E+00	.4167E+02	.0000E+00	.0000E+00	.0000E+00
2	.0000E+00	.0000E+00	.7640E+02	.0000E+00	.0000E+00	.0000E+00
3	.0000E+00	.0000E+00	.6945E+02	.0000E+00	.0000E+00	.0000E+00
4	.0000E+00	.0000E+00	.6945E+02	.0000E+00	.0000E+00	.0000E+00
5	.0000E+00	.0000E+00	.6945E+02	.0000E+00	.0000E+00	.0000E+00
6	.0000E+00	.0000E+00	.6945E+02	.0000E+00	.0000E+00	.0000E+00
7	.0000E+00	.0000E+00	.6598E+02	.0000E+00	.0000E+00	.0000E+00
8	.0000E+00	.0000E+00	.6251E+02	.0000E+00	.0000E+00	.0000E+00
9	.0000E+00	.0000E+00	.5903E+02	.0000E+00	.0000E+00	.0000E+00
10	.0000E+00	.0000E+00	.5209E+02	.0000E+00	.0000E+00	.0000E+00
11	.0000E+00	.0000E+00	.4862E+02	.0000E+00	.0000E+00	.0000E+00
12	.0000E+00	.0000E+00	.2431E+02	.0000E+00	.0000E+00	.0000E+00
13	.0000E+00	.0000E+00	.8334E+02	.0000E+00	.0000E+00	.0000E+00
14	.0000E+00	.0000E+00	.1528E+03	.0000E+00	.0000E+00	.0000E+00
15	.0000E+00	.0000E+00	.1389E+03	.0000E+00	.0000E+00	.0000E+00
16	.0000E+00	.0000E+00	.1389E+03	.0000E+00	.0000E+00	.0000E+00
17	.0000E+00	.0000E+00	.1389E+03	.0000E+00	.0000E+00	.0000E+00
18	.0000E+00	.0000E+00	.1389E+03	.0000E+00	.0000E+00	.0000E+00
19	.0000E+00	.0000E+00	.1320E+03	.0000E+00	.0000E+00	.0000E+00
20	.0000E+00	.0000E+00	.1250E+03	.0000E+00	.0000E+00	.0000E+00
21	.0000E+00	.0000E+00	.1181E+03	.0000E+00	.0000E+00	.0000E+00
22	.0000E+00	.0000E+00	.1042E+03	.0000E+00	.0000E+00	.0000E+00
23	.0000E+00	.0000E+00	.9723E+02	.0000E+00	.0000E+00	.0000E+00
24	.0000E+00	.0000E+00	.4862E+02	.0000E+00	.0000E+00	.0000E+00
25	.0000E+00	.0000E+00	.8334E+02	.0000E+00	.0000E+00	.0000E+00
26	.0000E+00	.0000E+00	.1528E+03	.0000E+00	.0000E+00	.0000E+00
27	.0000E+00	.0000E+00	.1389E+03	.0000E+00	.0000E+00	.0000E+00
28	.0000E+00	.0000E+00	.1389E+03	.0000E+00	.0000E+00	.0000E+00
29	.0000E+00	.0000E+00	.1389E+03	.0000E+00	.0000E+00	.0000E+00
30	.0000E+00	.0000E+00	.1389E+03	.0000E+00	.0000E+00	.0000E+00
31	.0000E+00	.0000E+00	.1320E+03	.0000E+00	.0000E+00	.0000E+00
32	.0000E+00	.0000E+00	.1250E+03	.0000E+00	.0000E+00	.0000E+00
33	.0000E+00	.0000E+00	.1181E+03	.0000E+00	.0000E+00	.0000E+00
34	.0000E+00	.0000E+00	.1042E+03	.0000E+00	.0000E+00	.0000E+00
35	.0000E+00	.0000E+00	.9723E+02	.0000E+00	.0000E+00	.0000E+00

========== I M A G E S 3 D ==========
= Copyright (c) 1984 Celestial Software Inc. =
==========

SOLVE DISPLACEMENTS Version 2.0 07/01/90

L O A D C A S E 5

OVERBURDEN PRESSURE

APPLIED LOAD VECTOR

Node	Fx	Fy	Fz	Mx	My	Mz
36	.0000E+00	.0000E+00	.4862E+02	.0000E+00	.0000E+00	.0000E+00
37	.0000E+00	.0000E+00	.8334E+02	.0000E+00	.0000E+00	.0000E+00
38	.0000E+00	.0000E+00	.1528E+03	.0000E+00	.0000E+00	.0000E+00
39	.0000E+00	.0000E+00	.1389E+03	.0000E+00	.0000E+00	.0000E+00
40	.0000E+00	.0000E+00	.1389E+03	.0000E+00	.0000E+00	.0000E+00
41	.0000E+00	.0000E+00	.1389E+03	.0000E+00	.0000E+00	.0000E+00
42	.0000E+00	.0000E+00	.1389E+03	.0000E+00	.0000E+00	.0000E+00
43	.0000E+00	.0000E+00	.1320E+03	.0000E+00	.0000E+00	.0000E+00
44	.0000E+00	.0000E+00	.1250E+03	.0000E+00	.0000E+00	.0000E+00
45	.0000E+00	.0000E+00	.1181E+03	.0000E+00	.0000E+00	.0000E+00
46	.0000E+00	.0000E+00	.1042E+03	.0000E+00	.0000E+00	.0000E+00
47	.0000E+00	.0000E+00	.9723E+02	.0000E+00	.0000E+00	.0000E+00
48	.0000E+00	.0000E+00	.4862E+02	.0000E+00	.0000E+00	.0000E+00
49	.0000E+00	.0000E+00	.8334E+02	.0000E+00	.0000E+00	.0000E+00
50	.0000E+00	.0000E+00	.1528E+03	.0000E+00	.0000E+00	.0000E+00
51	.0000E+00	.0000E+00	.1389E+03	.0000E+00	.0000E+00	.0000E+00
52	.0000E+00	.0000E+00	.1389E+03	.0000E+00	.0000E+00	.0000E+00
53	.0000E+00	.0000E+00	.1389E+03	.0000E+00	.0000E+00	.0000E+00
54	.0000E+00	.0000E+00	.1389E+03	.0000E+00	.0000E+00	.0000E+00
55	.0000E+00	.0000E+00	.1320E+03	.0000E+00	.0000E+00	.0000E+00
56	.0000E+00	.0000E+00	.1250E+03	.0000E+00	.0000E+00	.0000E+00
57	.0000E+00	.0000E+00	.1181E+03	.0000E+00	.0000E+00	.0000E+00
58	.0000E+00	.0000E+00	.1042E+03	.0000E+00	.0000E+00	.0000E+00
59	.0000E+00	.0000E+00	.9723E+02	.0000E+00	.0000E+00	.0000E+00
60	.0000E+00	.0000E+00	.4862E+02	.0000E+00	.0000E+00	.0000E+00
61	.0000E+00	.0000E+00	.7917E+02	.0000E+00	.0000E+00	.0000E+00
62	.0000E+00	.0000E+00	.1452E+03	.0000E+00	.0000E+00	.0000E+00
63	.0000E+00	.0000E+00	.1320E+03	.0000E+00	.0000E+00	.0000E+00
64	.0000E+00	.0000E+00	.1320E+03	.0000E+00	.0000E+00	.0000E+00
65	.0000E+00	.0000E+00	.1320E+03	.0000E+00	.0000E+00	.0000E+00
66	.0000E+00	.0000E+00	.1320E+03	.0000E+00	.0000E+00	.0000E+00
67	.0000E+00	.0000E+00	.1254E+03	.0000E+00	.0000E+00	.0000E+00
68	.0000E+00	.0000E+00	.1188E+03	.0000E+00	.0000E+00	.0000E+00
69	.0000E+00	.0000E+00	.1122E+03	.0000E+00	.0000E+00	.0000E+00
70	.0000E+00	.0000E+00	.9897E+02	.0000E+00	.0000E+00	.0000E+00
71	.0000E+00	.0000E+00	.9237E+02	.0000E+00	.0000E+00	.0000E+00
72	.0000E+00	.0000E+00	.4618E+02	.0000E+00	.0000E+00	.0000E+00
73	.0000E+00	.0000E+00	.7501E+02	.0000E+00	.0000E+00	.0000E+00
74	.0000E+00	.0000E+00	.1375E+03	.0000E+00	.0000E+00	.0000E+00
75	.0000E+00	.0000E+00	.1250E+03	.0000E+00	.0000E+00	.0000E+00

========== I M A G E S 3 D ==========
= Copyright (c) 1984 Celestial Software Inc. =
==========

SOLVE DISPLACEMENTS Version 2.0 07/01/90

L O A D C A S E 5

OVERBURDEN PRESSURE

APPLIED LOAD VECTOR

Node	Fx	Fy	Fz	Mx	My	Mz
76	.0000E+00	.0000E+00	.1250E+03	.0000E+00	.0000E+00	.0000E+00
77	.0000E+00	.0000E+00	.1250E+03	.0000E+00	.0000E+00	.0000E+00
78	.0000E+00	.0000E+00	.1250E+03	.0000E+00	.0000E+00	.0000E+00
79	.0000E+00	.0000E+00	.1188E+03	.0000E+00	.0000E+00	.0000E+00
80	.0000E+00	.0000E+00	.1125E+03	.0000E+00	.0000E+00	.0000E+00
81	.0000E+00	.0000E+00	.1063E+03	.0000E+00	.0000E+00	.0000E+00
82	.0000E+00	.0000E+00	.9376E+02	.0000E+00	.0000E+00	.0000E+00
83	.0000E+00	.0000E+00	.8751E+02	.0000E+00	.0000E+00	.0000E+00
84	.0000E+00	.0000E+00	.4375E+02	.0000E+00	.0000E+00	.0000E+00
85	.0000E+00	.0000E+00	.7084E+02	.0000E+00	.0000E+00	.0000E+00
86	.0000E+00	.0000E+00	.1299E+03	.0000E+00	.0000E+00	.0000E+00
87	.0000E+00	.0000E+00	.1181E+03	.0000E+00	.0000E+00	.0000E+00
88	.0000E+00	.0000E+00	.1181E+03	.0000E+00	.0000E+00	.0000E+00
89	.0000E+00	.0000E+00	.1181E+03	.0000E+00	.0000E+00	.0000E+00
90	.0000E+00	.0000E+00	.1181E+03	.0000E+00	.0000E+00	.0000E+00
91	.0000E+00	.0000E+00	.1122E+03	.0000E+00	.0000E+00	.0000E+00
92	.0000E+00	.0000E+00	.1063E+03	.0000E+00	.0000E+00	.0000E+00
93	.0000E+00	.0000E+00	.1004E+03	.0000E+00	.0000E+00	.0000E+00
94	.0000E+00	.0000E+00	.8855E+02	.0000E+00	.0000E+00	.0000E+00
95	.0000E+00	.0000E+00	.8265E+02	.0000E+00	.0000E+00	.0000E+00
96	.0000E+00	.0000E+00	.4132E+02	.0000E+00	.0000E+00	.0000E+00
97	.0000E+00	.0000E+00	.6667E+02	.0000E+00	.0000E+00	.0000E+00
98	.0000E+00	.0000E+00	.1222E+03	.0000E+00	.0000E+00	.0000E+00
99	.0000E+00	.0000E+00	.1111E+03	.0000E+00	.0000E+00	.0000E+00
100	.0000E+00	.0000E+00	.1111E+03	.0000E+00	.0000E+00	.0000E+00
101	.0000E+00	.0000E+00	.1111E+03	.0000E+00	.0000E+00	.0000E+00
102	.0000E+00	.0000E+00	.1111E+03	.0000E+00	.0000E+00	.0000E+00
103	.0000E+00	.0000E+00	.1056E+03	.0000E+00	.0000E+00	.0000E+00
104	.0000E+00	.0000E+00	.1000E+03	.0000E+00	.0000E+00	.0000E+00
105	.0000E+00	.0000E+00	.9445E+02	.0000E+00	.0000E+00	.0000E+00
106	.0000E+00	.0000E+00	.8334E+02	.0000E+00	.0000E+00	.0000E+00
107	.0000E+00	.0000E+00	.7778E+02	.0000E+00	.0000E+00	.0000E+00
108	.0000E+00	.0000E+00	.3889E+02	.0000E+00	.0000E+00	.0000E+00
109	.0000E+00	.0000E+00	.5938E+02	.0000E+00	.0000E+00	.0000E+00
110	.0000E+00	.0000E+00	.1080E+03	.0000E+00	.0000E+00	.0000E+00
111	.0000E+00	.0000E+00	.9723E+02	.0000E+00	.0000E+00	.0000E+00
112	.0000E+00	.0000E+00	.9723E+02	.0000E+00	.0000E+00	.0000E+00
113	.0000E+00	.0000E+00	.9723E+02	.0000E+00	.0000E+00	.0000E+00
114	.0000E+00	.0000E+00	.9723E+02	.0000E+00	.0000E+00	.0000E+00
115	.0000E+00	.0000E+00	.9237E+02	.0000E+00	.0000E+00	.0000E+00

========== I M A G E S 3 D ==========
= Copyright (c) 1984 Celestial Software Inc. =
==========

SOLVE DISPLACEMENTS Version 2.0 07/01/90

L O A D C A S E 5

OVERBURDEN PRESSURE

APPLIED LOAD VECTOR

Node	Fx	Fy	Fz	Mx	My	Mz
116	.0000E+00	.0000E+00	.8751E+02	.0000E+00	.0000E+00	.0000E+00
117	.0000E+00	.0000E+00	.8265E+02	.0000E+00	.0000E+00	.0000E+00
118	.0000E+00	.0000E+00	.7292E+02	.0000E+00	.0000E+00	.0000E+00
119	.0000E+00	.0000E+00	.6910E+02	.0000E+00	.0000E+00	.0000E+00
120	.0000E+00	.0000E+00	.3507E+02	.0000E+00	.0000E+00	.0000E+00
121	.0000E+00	.0000E+00	.5625E+02	.0000E+00	.0000E+00	.0000E+00
122	.0000E+00	.0000E+00	.9792E+02	.0000E+00	.0000E+00	.0000E+00
123	.0000E+00	.0000E+00	.8334E+02	.0000E+00	.0000E+00	.0000E+00
124	.0000E+00	.0000E+00	.8334E+02	.0000E+00	.0000E+00	.0000E+00
125	.0000E+00	.0000E+00	.8334E+02	.0000E+00	.0000E+00	.0000E+00
126	.0000E+00	.0000E+00	.8334E+02	.0000E+00	.0000E+00	.0000E+00
127	.0000E+00	.0000E+00	.7917E+02	.0000E+00	.0000E+00	.0000E+00
128	.0000E+00	.0000E+00	.7501E+02	.0000E+00	.0000E+00	.0000E+00
129	.0000E+00	.0000E+00	.7084E+02	.0000E+00	.0000E+00	.0000E+00
130	.0000E+00	.0000E+00	.6251E+02	.0000E+00	.0000E+00	.0000E+00
131	.0000E+00	.0000E+00	.6459E+02	.0000E+00	.0000E+00	.0000E+00
132	.0000E+00	.0000E+00	.3542E+02	.0000E+00	.0000E+00	.0000E+00
133	.0000E+00	.0000E+00	.3021E+02	.0000E+00	.0000E+00	.0000E+00
134	.0000E+00	.0000E+00	.5105E+02	.0000E+00	.0000E+00	.0000E+00
135	.0000E+00	.0000E+00	.4167E+02	.0000E+00	.0000E+00	.0000E+00
136	.0000E+00	.0000E+00	.4167E+02	.0000E+00	.0000E+00	.0000E+00
137	.0000E+00	.0000E+00	.4167E+02	.0000E+00	.0000E+00	.0000E+00
138	.0000E+00	.0000E+00	.4167E+02	.0000E+00	.0000E+00	.0000E+00
139	.0000E+00	.0000E+00	.3959E+02	.0000E+00	.0000E+00	.0000E+00
140	.0000E+00	.0000E+00	.3750E+02	.0000E+00	.0000E+00	.0000E+00
141	.0000E+00	.0000E+00	.3542E+02	.0000E+00	.0000E+00	.0000E+00
142	.0000E+00	.0000E+00	.3125E+02	.0000E+00	.0000E+00	.0000E+00
143	.0000E+00	.0000E+00	.3438E+02	.0000E+00	.0000E+00	.0000E+00
144	.0000E+00	.0000E+00	.1979E+02	.0000E+00	.0000E+00	.0000E+00

```
============== I M A G E S  3 D ==============
= Copyright (c) 1984   Celestial Software Inc. =
===============================================
```

SOLVE DISPLACEMENTS Version 2.0 07/01/90

L O A D C A S E 6

OPERATING PIPE AND JUMPER LOADS

APPLIED LOAD VECTOR

Node	Fx	Fy	Fz	Mx	My	Mz
94	.7650E+03	.9290E+03	.3849E+04	.7440E+04	.2963E+05	.4680E+04

========== I M A G E S 3 D ==========
= Copyright (c) 1984 Celestial Software Inc. =
==========

SOLVE DISPLACEMENTS Version 2.0 07/01/90

L O A D C A S E 7
SEISMIC PIPE AND JUMPER LOADS

APPLIED LOAD VECTOR

Node	Fx	Fy	Fz	Mx	My	Mz
94	.7560E+03	.9730E+03	.4187E+04	.6072E+04	.7320E+04	.5556E+04

========== I M A G E S 3 D ==========
= Copyright (c) 1984 Celestial Software Inc. =
==========

SOLVE DISPLACEMENTS Version 2.0 07/01/90

L O A D C A S E 8

COVER BLOCK DEAD LOAD

APPLIED LOAD VECTOR

Node	Fx	Fy	Fz	Mx	My	Mz
109	.0000E+00	.2660E+04	.0000E+00	.0000E+00	.0000E+00	.0000E+00
115	.0000E+00	.4620E+04	.0000E+00	.0000E+00	.0000E+00	.0000E+00
120	.0000E+00	.1960E+04	.0000E+00	.0000E+00	.0000E+00	.0000E+00

========== I M A G E S 3 D ==========
= Copyright (c) 1984 Celestial Software Inc. =
==========
COMBINE RESULTS Version 2.0 07/01/90

Combined Plate Stresses

Load Combination Method
1.5*(f[1,1]+f[1,2]+f[1,4]+f[1,7])+f[1,3]+f[1,5]+f[1,6]+f[1,8]

Plate		Sigma-X	Sigma-Y	Tau-XY	Tau-XZ	Tau-YZ
1	T	-1.020E+01	-1.193E+01	-6.588E+00		
1	M	3.824E-01	4.722E-01	2.524E-01	3.651E-01	8.608E-01
1	B	1.096E+01	1.287E+01	7.093E+00		
2	T	-8.967E+00	-2.980E+01	-1.105E+01		
2	M	3.774E-01	1.047E+00	3.799E-01	-8.489E-01	5.279E+00
2	B	9.721E+00	3.190E+01	1.181E+01		
3	T	-1.034E+01	-4.833E+01	-1.119E+01		
3	M	3.951E-01	1.437E+00	4.348E-01	-1.275E+00	1.170E+01
3	B	1.113E+01	5.120E+01	1.206E+01		
4	T	-1.232E+01	-6.483E+01	-7.842E+00		
4	M	4.033E-01	1.782E+00	4.209E-01	-1.079E+00	1.644E+01
4	B	1.312E+01	6.840E+01	8.684E+00		
5	T	-1.361E+01	-7.413E+01	-2.598E+00		
5	M	3.960E-01	2.046E+00	3.383E-01	-4.164E-01	1.891E+01
5	B	1.440E+01	7.822E+01	3.275E+00		
6	T	-1.351E+01	-7.389E+01	3.316E+00		
6	M	3.733E-01	2.177E+00	1.921E-01	3.969E-01	1.876E+01
6	B	1.426E+01	7.824E+01	-2.932E+00		
7	T	-1.225E+01	-6.490E+01	8.431E+00		
7	M	3.457E-01	2.135E+00	1.568E-02	1.018E+00	1.619E+01
7	B	1.294E+01	6.916E+01	-8.400E+00		
8	T	-1.061E+01	-4.982E+01	1.160E+01		
8	M	3.199E-01	1.900E+00	-1.516E-01	1.221E+00	1.171E+01
8	B	1.125E+01	5.362E+01	-1.191E+01		
9	T	-9.529E+00	-3.310E+01	1.203E+01		
9	M	3.091E-01	1.507E+00	-2.701E-01	9.317E-01	6.323E+00
9	B	1.015E+01	3.611E+01	-1.257E+01		
10	T	-9.611E+00	-1.961E+01	9.549E+00		
10	M	3.191E-01	1.028E+00	-3.062E-01	3.289E-01	1.526E+00
10	B	1.025E+01	2.166E+01	-1.016E+01		
11	T	-1.113E+01	-8.585E+00	5.831E+00		
11	M	3.653E-01	4.379E-01	-2.697E-01	-5.709E-01	-2.759E-01
11	B	1.186E+01	9.461E+00	-6.371E+00		
12	T	-2.538E+01	-1.002E+01	-1.153E+01		
12	M	7.654E-01	4.678E-01	4.007E-01	4.085E+00	-6.109E-01
12	B	2.691E+01	1.096E+01	1.233E+01		

========== I M A G E S 3 D ==========
= Copyright (c) 1984 Celestial Software Inc. =
==========
COMBINE RESULTS Version 2.0 07/01/90

Combined Plate Stresses

Plate		Sigma-X	Sigma-Y	Tau-XY	Tau-XZ	Tau-YZ
13	T	-8.368E+00	-1.316E+01	-1.745E+01		
13	M	5.969E-01	9.569E-01	4.272E-01	1.303E+00	2.095E+00
13	B	9.562E+00	1.507E+01	1.831E+01		
14	T	8.544E-01	-1.848E+01	-1.802E+01		
14	M	4.909E-01	1.413E+00	4.822E-01	-1.137E-01	7.722E+00
14	B	1.274E-01	2.131E+01	1.899E+01		
15	T	6.250E+00	-2.406E+01	-1.286E+01		
15	M	3.813E-01	1.823E+00	4.824E-01	-5.646E-01	1.154E+01
15	B	-5.488E+00	2.770E+01	1.383E+01		
16	T	8.769E+00	-2.767E+01	-4.605E+00		
16	M	2.629E-01	2.160E+00	4.081E-01	-3.045E-01	1.354E+01
16	B	-8.243E+00	3.199E+01	5.421E+00		
17	T	8.934E+00	-2.803E+01	4.895E+00		
17	M	1.585E-01	2.359E+00	2.538E-01	1.538E-01	1.343E+01
17	B	-8.618E+00	3.275E+01	-4.388E+00		
18	T	6.547E+00	-2.527E+01	1.324E+01		
18	M	9.646E-02	2.351E+00	4.320E-02	3.038E-01	1.134E+01
18	B	-6.354E+00	2.998E+01	-1.315E+01		
19	T	1.023E+00	-2.051E+01	1.855E+01		
19	M	1.188E-01	2.106E+00	-1.806E-01	-1.681E-01	7.651E+00
19	B	-7.856E-01	2.472E+01	-1.891E+01		
20	T	-7.712E+00	-1.559E+01	1.944E+01		
20	M	2.221E-01	1.655E+00	-3.726E-01	-1.300E+00	3.088E+00
20	B	8.156E+00	1.890E+01	-2.019E+01		
21	T	-1.835E+01	-1.218E+01	1.563E+01		
21	M	4.080E-01	1.085E+00	-4.982E-01	-2.776E+00	-1.229E+00
21	B	1.917E+01	1.436E+01	-1.663E+01		
22	T	-3.143E+01	-1.035E+01	1.110E+01		
22	M	6.601E-01	4.910E-01	-5.896E-01	-4.686E+00	-1.590E+00
22	B	3.275E+01	1.133E+01	-1.228E+01		
23	T	-4.471E+01	-1.171E+01	-1.390E+01		
23	M	9.715E-01	4.751E-01	5.533E-01	1.059E+01	-1.642E+00
23	B	4.665E+01	1.266E+01	1.501E+01		
24	T	-1.085E+01	-4.448E+00	-2.136E+01		
24	M	8.053E-01	9.092E-01	5.797E-01	6.820E+00	-2.798E-01
24	B	1.246E+01	6.266E+00	2.252E+01		
25	T	9.432E+00	-9.895E-01	-2.227E+01		
25	M	6.309E-01	1.375E+00	6.269E-01	4.240E+00	4.615E+00
25	B	-8.170E+00	3.740E+00	2.352E+01		
26	T	2.223E+01	3.510E-01	-1.627E+01		
26	M	4.465E-01	1.852E+00	6.384E-01	2.274E+00	7.735E+00
26	B	-2.133E+01	3.354E+00	1.755E+01		

========== I M A G E S 3 D ==========
= Copyright (c) 1984 Celestial Software Inc. =
==========
COMBINE RESULTS Version 2.0 07/01/90

Combined Plate Stresses

Plate		Sigma-X	Sigma-Y	Tau-XY	Tau-XZ	Tau-YZ
27	T	2.877E+01	3.589E-01	-6.344E+00		
27	M	2.565E-01	2.282E+00	5.664E-01	6.883E-01	9.412E+00
27	B	-2.826E+01	4.206E+00	7.476E+00		
28	T	2.936E+01	-5.936E-01	5.279E+00		
28	M	7.660E-02	2.580E+00	3.750E-01	-9.114E-01	9.432E+00
28	B	-2.921E+01	5.753E+00	-4.529E+00		
29	T	2.376E+01	-2.168E+00	1.583E+01		
29	M	-1.971E-02	2.655E+00	8.359E-02	-2.762E+00	7.808E+00
29	B	-2.380E+01	7.477E+00	-1.566E+01		
30	T	1.102E+01	-4.319E+00	2.288E+01		
30	M	-1.621E-02	2.432E+00	-2.722E-01	-4.946E+00	4.721E+00
30	B	-1.106E+01	9.183E+00	-2.343E+01		
31	T	-8.150E+00	-7.158E+00	2.447E+01		
31	M	1.553E-01	1.942E+00	-6.146E-01	-7.331E+00	6.404E-01
31	B	8.461E+00	1.104E+01	-2.570E+01		
32	T	-3.128E+01	-1.092E+01	1.998E+01		
32	M	3.992E-01	1.300E+00	-8.649E-01	-9.558E+00	-3.370E+00
32	B	3.208E+01	1.352E+01	-2.171E+01		
33	T	-5.794E+01	-1.559E+01	1.412E+01		
33	M	7.196E-01	5.947E-01	-1.008E+00	-1.192E+01	-2.596E+00
33	B	5.938E+01	1.678E+01	-1.613E+01		
34	T	-6.672E+01	-1.576E+01	-1.381E+01		
34	M	1.113E+00	4.655E-01	6.812E-01	1.638E+01	-2.215E+00
34	B	6.895E+01	1.669E+01	1.517E+01		
35	T	-1.563E+01	-1.389E+00	-2.157E+01		
35	M	9.690E-01	8.473E-01	7.421E-01	1.149E+01	-1.793E+00
35	B	1.757E+01	3.084E+00	2.305E+01		
36	T	1.586E+01	7.718E+00	-2.283E+01		
36	M	7.923E-01	1.323E+00	8.210E-01	7.785E+00	2.455E+00
36	B	-1.427E+01	-5.073E+00	2.448E+01		
37	T	3.620E+01	1.359E+01	-1.707E+01		
37	M	5.738E-01	1.873E+00	8.535E-01	4.587E+00	5.127E+00
37	B	-3.505E+01	-9.847E+00	1.878E+01		
38	T	4.691E+01	1.615E+01	-7.403E+00		
38	M	3.417E-01	2.411E+00	7.760E-01	1.642E+00	6.678E+00
38	B	-4.623E+01	-1.133E+01	8.955E+00		
39	T	4.848E+01	1.511E+01	4.046E+00		
39	M	1.324E-01	2.865E+00	5.700E-01	-1.450E+00	7.029E+00
39	B	-4.822E+01	-9.379E+00	-2.906E+00		
40	T	4.042E+01	1.048E+01	1.479E+01		
40	M	-8.136E-02	3.084E+00	1.757E-01	-5.044E+00	5.975E+00
40	B	-4.059E+01	-4.311E+00	-1.444E+01		

========== I M A G E S 3 D ==========
= Copyright (c) 1984 Celestial Software Inc. =
==========
COMBINE RESULTS Version 2.0 07/01/90

Combined Plate Stresses

Plate		Sigma-X	Sigma-Y	Tau-XY	Tau-XZ	Tau-YZ
41	T	2.130E+01	3.265E+00	2.307E+01		
41	M	-8.499E-02	2.966E+00	-3.447E-01	-9.073E+00	3.353E+00
41	B	-2.147E+01	2.666E+00	-2.376E+01		
42	T	-9.575E+00	-5.457E+00	2.590E+01		
42	M	-1.233E-02	2.446E+00	-9.073E-01	-1.314E+01	-5.975E-01
42	B	9.550E+00	1.035E+01	-2.772E+01		
43	T	-4.685E+01	-1.434E+01	2.193E+01		
43	M	3.561E-01	1.669E+00	-1.337E+00	-1.656E+01	-4.728E+00
43	B	4.756E+01	1.768E+01	-2.460E+01		
44	T	-9.063E+01	-2.370E+01	1.591E+01		
44	M	7.185E-01	7.213E-01	-1.541E+00	-1.956E+01	-3.306E+00
44	B	9.207E+01	2.515E+01	-1.900E+01		
45	T	-8.855E+01	-2.103E+01	-1.286E+01		
45	M	1.187E+00	4.257E-01	7.692E-01	2.123E+01	-2.418E+00
45	B	9.092E+01	2.188E+01	1.440E+01		
46	T	-2.169E+01	-2.082E+00	-2.030E+01		
46	M	1.097E+00	7.426E-01	8.771E-01	1.549E+01	-2.556E+00
46	B	2.388E+01	3.567E+00	2.205E+01		
47	T	2.049E+01	1.089E+01	-2.164E+01		
47	M	9.527E-01	1.226E+00	1.013E+00	1.080E+01	1.097E+00
47	B	-1.858E+01	-8.442E+00	2.366E+01		
48	T	4.792E+01	2.011E+01	-1.638E+01		
48	M	7.415E-01	1.870E+00	1.097E+00	6.563E+00	3.391E+00
48	B	-4.644E+01	-1.637E+01	1.857E+01		
49	T	6.243E+01	2.515E+01	-7.713E+00		
49	M	4.843E-01	2.583E+00	1.019E+00	2.617E+00	4.824E+00
49	B	-6.146E+01	-1.999E+01	9.751E+00		
50	T	6.516E+01	2.521E+01	2.137E+00		
50	M	2.874E-01	3.141E+00	7.358E-01	-1.353E+00	5.591E+00
50	B	-6.459E+01	-1.893E+01	-6.656E-01		
51	T	5.667E+01	2.007E+01	1.163E+01		
51	M	1.982E-01	3.629E+00	4.421E-01	-5.870E+00	5.849E+00
51	B	-5.628E+01	-1.281E+01	-1.075E+01		
52	T	3.268E+01	8.189E+00	1.948E+01		
52	M	-2.785E-01	3.764E+00	-2.834E-01	-1.249E+01	4.235E+00
52	B	-3.324E+01	-6.612E-01	-2.004E+01		
53	T	-7.080E+00	-6.179E+00	2.546E+01		
53	M	-3.700E-02	3.319E+00	-1.199E+00	-1.930E+01	4.173E-01
53	B	7.006E+00	1.282E+01	-2.786E+01		
54	T	-6.368E+01	-2.085E+01	2.326E+01		
54	M	3.483E-02	2.258E+00	-1.883E+00	-2.532E+01	-4.654E+00
54	B	6.375E+01	2.537E+01	-2.703E+01		

========== I M A G E S 3 D ==========
= Copyright (c) 1984 Celestial Software Inc. =
==========
COMBINE RESULTS Version 2.0 07/01/90

Combined Plate Stresses

Plate		Sigma-X	Sigma-Y	Tau-XY	Tau-XZ	Tau-YZ
55	T	-1.275E+02	-3.432E+01	1.834E+01		
55	M	7.230E-01	9.979E-01	-2.322E+00	-2.923E+01	-3.762E+00
55	B	1.290E+02	3.632E+01	-2.298E+01		
56	T	-1.084E+02	-2.650E+01	-1.206E+01		
56	M	1.163E+00	3.618E-01	8.055E-01	2.523E+01	-2.404E+00
56	B	1.107E+02	2.723E+01	1.367E+01		
57	T	-2.769E+01	-4.659E+00	-1.882E+01		
57	M	1.137E+00	5.980E-01	9.428E-01	1.880E+01	-2.755E+00
57	B	2.996E+01	5.855E+00	2.071E+01		
58	T	2.392E+01	1.091E+01	-1.981E+01		
58	M	1.096E+00	1.064E+00	1.145E+00	1.321E+01	4.452E-01
58	B	-2.173E+01	-8.778E+00	2.210E+01		
59	T	5.739E+01	2.254E+01	-1.475E+01		
59	M	9.223E-01	1.812E+00	1.335E+00	8.124E+00	2.331E+00
59	B	-5.554E+01	-1.891E+01	1.742E+01		
60	T	7.491E+01	2.997E+01	-6.864E+00		
60	M	6.401E-01	2.780E+00	1.290E+00	3.491E+00	3.514E+00
60	B	-7.363E+01	-2.441E+01	9.444E+00		
61	T	7.824E+01	3.271E+01	1.366E+00		
61	M	4.269E-01	3.636E+00	8.281E-01	-8.778E-01	4.332E+00
61	B	-7.738E+01	-2.544E+01	2.906E-01		
62	T	6.986E+01	2.981E+01	8.176E+00		
62	M	6.007E-01	3.719E+00	2.580E-01	-5.006E+00	5.700E+00
62	B	-6.866E+01	-2.237E+01	-7.660E+00		
63	T	4.920E+01	2.265E+01	1.573E+01		
63	M	1.007E+00	4.736E+00	6.290E-01	-1.072E+01	9.385E+00
63	B	-4.718E+01	-1.318E+01	-1.448E+01		
64	T	-4.099E+00	-1.348E+00	1.847E+01		
64	M	-1.324E+00	4.875E+00	-1.145E+00	-2.819E+01	6.035E+00
64	B	1.452E+00	1.110E+01	-2.076E+01		
65	T	-6.662E+01	-2.596E+01	2.417E+01		
65	M	-8.634E-03	3.401E+00	-2.821E+00	-3.499E+01	-1.871E+00
65	B	6.660E+01	3.276E+01	-2.981E+01		
66	T	-1.719E+02	-4.710E+01	2.409E+01		
66	M	3.629E-01	1.145E+00	-3.222E+00	-4.481E+01	-1.869E+00
66	B	1.726E+02	4.939E+01	-3.054E+01		
67	T	-1.264E+02	-3.165E+01	-1.178E+01		
67	M	9.996E-01	2.721E-01	7.921E-01	2.905E+01	-2.151E+00
67	B	1.284E+02	3.219E+01	1.337E+01		
68	T	-3.277E+01	-7.469E+00	-1.772E+01		
68	M	1.043E+00	4.591E-01	9.440E-01	2.159E+01	-2.368E+00
68	B	3.485E+01	8.387E+00	1.961E+01		

========== I M A G E S 3 D ==========
= Copyright (c) 1984 Celestial Software Inc. =
==========
COMBINE RESULTS Version 2.0 07/01/90

Combined Plate Stresses

Plate		Sigma-X	Sigma-Y	Tau-XY	Tau-XZ	Tau-YZ
69	T	2.689E+01	9.582E+00	-1.813E+01		
69	M	1.089E+00	8.339E-01	1.123E+00	1.498E+01	3.996E-01
69	B	-2.471E+01	-7.915E+00	2.038E+01		
70	T	6.550E+01	2.235E+01	-1.280E+01		
70	M	1.206E+00	1.579E+00	1.490E+00	9.180E+00	1.694E+00
70	B	-6.308E+01	-1.919E+01	1.578E+01		
71	T	8.519E+01	3.148E+01	-4.844E+00		
71	M	7.977E-01	3.000E+00	1.715E+00	4.116E+00	2.428E+00
71	B	-8.360E+01	-2.548E+01	8.274E+00		
72	T	8.860E+01	3.708E+01	2.942E+00		
72	M	3.657E-01	4.446E+00	9.266E-01	-4.121E-01	2.956E+00
72	B	-8.787E+01	-2.819E+01	-1.089E+00		
73	T	7.898E+01	3.905E+01	8.564E+00		
73	M	7.523E-01	4.708E+00	-4.768E-01	-4.087E+00	3.615E+00
73	B	-7.747E+01	-2.964E+01	-9.518E+00		
74	T	6.262E+01	3.852E+01	1.348E+01		
74	M	2.275E+00	2.498E+00	-7.312E-01	-4.989E+00	8.236E+00
74	B	-5.807E+01	-3.352E+01	-1.494E+01		
75	T	6.699E+01	3.682E+01	3.004E+01		
75	M	4.804E+00	8.352E+00	3.697E+00	6.878E+00	2.613E+01
75	B	-5.738E+01	-2.012E+01	-2.265E+01		
76	T	-1.072E+02	-6.719E+00	4.992E+01		
76	M	-4.609E+00	6.571E+00	-3.985E+00	-5.925E+01	1.667E+01
76	B	9.801E+01	1.986E+01	-5.789E+01		
77	T	-2.258E+02	-4.424E+01	2.245E+01		
77	M	-2.842E+00	-2.846E-01	-3.329E+00	-5.783E+01	-3.235E+00
77	B	2.201E+02	4.367E+01	-2.910E+01		
78	T	-1.429E+02	-3.526E+01	-1.165E+01		
78	M	6.858E-01	1.818E-01	7.505E-01	3.339E+01	-1.306E+00
78	B	1.443E+02	3.562E+01	1.315E+01		
79	T	-3.677E+01	-8.364E+00	-1.743E+01		
79	M	7.727E-01	3.181E-01	8.765E-01	2.382E+01	-1.029E+00
79	B	3.832E+01	9.000E+00	1.918E+01		
80	T	3.032E+01	8.602E+00	-1.731E+01		
80	M	9.237E-01	7.154E-01	1.040E+00	1.601E+01	8.489E-01
80	B	-2.847E+01	-7.171E+00	1.939E+01		
81	T	7.238E+01	2.023E+01	-1.156E+01		
81	M	1.107E+00	1.068E+00	1.205E+00	9.743E+00	1.253E+00
81	B	-7.017E+01	-1.809E+01	1.397E+01		
82	T	9.490E+01	2.946E+01	-2.440E+00		
82	M	1.651E+00	2.769E+00	2.275E+00	4.405E+00	1.403E+00
82	B	-9.160E+01	-2.393E+01	6.990E+00		

========== I M A G E S 3 D ==========
= Copyright (c) 1984 Celestial Software Inc. =
==========
COMBINE RESULTS Version 2.0 07/01/90

Combined Plate Stresses

Plate		Sigma-X	Sigma-Y	Tau-XY	Tau-XZ	Tau-YZ
83	T	9.753E+01	3.750E+01	6.501E+00		
83	M	-2.127E-02	6.218E+00	1.787E+00	-2.900E-01	1.421E+00
83	B	-9.758E+01	-2.507E+01	-2.928E+00		
84	T	8.702E+01	4.128E+01	1.222E+01		
84	M	1.683E-01	6.147E+00	-2.013E+00	-4.002E+00	1.306E+00
84	B	-8.668E+01	-2.899E+01	-1.625E+01		
85	T	7.132E+01	3.963E+01	1.960E+01		
85	M	2.621E+00	3.341E+00	-3.028E+00	-3.849E+00	-2.771E+00
85	B	-6.608E+01	-3.294E+01	-2.565E+01		
86	T	7.599E+01	6.220E+01	-2.506E+00		
86	M	3.710E+00	-4.347E+00	-1.557E+00	8.172E+00	-3.619E+01
86	B	-6.857E+01	-7.090E+01	-6.087E-01		
87	T	-1.119E+02	1.730E+01	-1.166E+01		
87	M	-6.246E+00	-5.891E+00	-9.926E+00	-6.794E+01	-3.270E+01
87	B	9.942E+01	-2.908E+01	-8.192E+00		
88	T	-2.508E+02	-4.950E+01	-2.265E+00		
88	M	-4.546E+00	6.788E-01	-5.334E+00	-6.779E+01	1.068E-01
88	B	2.417E+02	5.085E+01	-8.402E+00		
89	T	-1.588E+02	-3.485E+01	-1.109E+01		
89	M	1.505E-01	8.486E-02	6.777E-01	3.750E+01	5.638E-01
89	B	1.591E+02	3.502E+01	1.245E+01		
90	T	-3.582E+01	-4.042E+00	-1.897E+01		
90	M	3.836E-01	2.602E-01	7.366E-01	2.614E+01	1.452E+00
90	B	3.659E+01	4.562E+00	2.045E+01		
91	T	3.391E+01	7.787E+00	-1.582E+01		
91	M	5.750E-01	4.809E-01	8.895E-01	1.796E+01	1.478E+00
91	B	-3.276E+01	-6.825E+00	1.760E+01		
92	T	7.782E+01	1.804E+01	-1.002E+01		
92	M	7.387E-01	1.230E+00	1.109E+00	1.108E+01	1.029E+00
92	B	-7.634E+01	-1.558E+01	1.224E+01		
93	T	1.014E+02	2.306E+01	-2.183E+00		
93	M	1.120E+00	5.495E-01	1.173E+00	4.597E+00	7.318E-01
93	B	-9.919E+01	-2.196E+01	4.529E+00		
94	T	1.067E+02	3.537E+01	1.083E+01		
94	M	1.615E+00	9.485E+00	4.824E+00	-1.659E+00	3.759E-01
94	B	-1.035E+02	-1.640E+01	-1.177E+00		
95	T	9.665E+01	3.622E+01	1.027E+01		
95	M	1.555E+00	9.707E+00	-5.539E+00	-7.057E+00	-8.620E-01
95	B	-9.354E+01	-1.681E+01	-2.135E+01		
96	T	7.268E+01	2.789E+01	1.921E+01		
96	M	6.534E-01	2.191E-01	-1.595E+00	-1.291E+01	-6.629E+00
96	B	-7.137E+01	-2.745E+01	-2.240E+01		

========== I M A G E S 3 D ==========
= Copyright (c) 1984 Celestial Software Inc. =
==========
COMBINE RESULTS Version 2.0 07/01/90

Combined Plate Stresses

Plate		Sigma-X	Sigma-Y	Tau-XY	Tau-XZ	Tau-YZ
97	T	7.841E+00	1.016E+01	2.224E+01		
97	M	6.350E-03	-1.033E+00	-1.739E+00	-3.289E+01	-9.065E+00
97	B	-7.828E+00	-1.222E+01	-2.571E+01		
98	T	-8.921E+01	-1.589E+01	1.038E+01		
98	M	1.924E-01	-2.448E+00	-3.669E+00	-5.206E+01	-4.861E+00
98	B	8.959E+01	1.100E+01	-1.771E+01		
99	T	-2.520E+02	-5.680E+01	-6.069E+00		
99	M	-3.513E+00	-1.964E+00	-5.888E+00	-6.804E+01	-1.480E+00
99	B	2.449E+02	5.287E+01	-5.708E+00		
100	T	-1.340E+02	-4.037E+01	-1.965E+01		
100	M	-4.180E-01	2.557E-01	7.544E-01	3.422E+01	6.001E+00
100	B	1.332E+02	4.088E+01	2.116E+01		
101	T	-2.372E+01	-7.916E+00	-2.235E+01		
101	M	-1.214E-02	1.883E-01	9.437E-01	2.322E+01	3.192E+00
101	B	2.369E+01	8.293E+00	2.424E+01		
102	T	3.279E+01	2.032E+01	-1.768E+01		
102	M	2.978E-01	7.074E-01	1.183E+00	1.653E+01	2.006E+00
102	B	-3.220E+01	-1.890E+01	2.004E+01		
103	T	7.074E+01	3.737E+01	-1.089E+01		
103	M	5.488E-01	1.020E+00	1.644E+00	1.039E+01	8.763E-01
103	B	-6.964E+01	-3.533E+01	1.418E+01		
104	T	9.120E+01	4.993E+01	-1.201E+00		
104	M	2.693E-01	3.649E+00	1.735E+00	4.220E+00	4.632E-01
104	B	-9.066E+01	-4.263E+01	4.670E+00		
105	T	9.605E+01	4.352E+01	1.519E+01		
105	M	2.915E-01	-6.718E+00	6.513E+00	-1.974E+00	-3.005E-01
105	B	-9.547E+01	-5.695E+01	-2.162E+00		
106	T	8.689E+01	4.109E+01	1.170E+01		
106	M	-1.727E-02	-6.924E+00	-7.094E+00	-8.210E+00	-2.350E+00
106	B	-8.693E+01	-5.494E+01	-2.589E+01		
107	T	5.796E+01	3.501E+01	2.248E+01		
107	M	-3.578E-01	2.665E+00	-2.139E+00	-1.764E+01	-3.935E+00
107	B	-5.868E+01	-2.968E+01	-2.676E+01		
108	T	6.042E+00	1.745E+00	1.932E+01		
108	M	6.837E-02	-8.807E-01	-2.958E+00	-2.954E+01	-1.560E+00
108	B	-5.906E+00	-3.507E+00	-2.523E+01		
109	T	-7.762E+01	-3.669E+01	1.570E+01		
109	M	-8.693E-01	-1.651E+00	-3.884E+00	-4.034E+01	4.128E+00
109	B	7.588E+01	3.339E+01	-2.347E+01		
110	T	-1.998E+02	-6.095E+01	1.251E+01		
110	M	-2.005E+00	2.444E-01	-4.933E+00	-5.033E+01	9.969E+00
110	B	1.958E+02	6.144E+01	-2.237E+01		

========== I M A G E S 3 D ==========
= Copyright (c) 1984 Celestial Software Inc. =
==========
COMBINE RESULTS Version 2.0 07/01/90

Combined Plate Stresses

Plate		Sigma-X	Sigma-Y	Tau-XY	Tau-XZ	Tau-YZ
111	T	-1.306E+02	-3.230E+01	-1.178E+01		
111	M	-9.755E-01	1.269E-01	5.391E-01	2.067E+01	4.230E+00
111	B	1.286E+02	3.255E+01	1.286E+01		
112	T	-2.083E+01	3.247E-01	-7.149E+00		
112	M	-5.048E-01	1.152E-01	7.109E-01	1.292E+01	1.011E+00
112	B	1.982E+01	-9.436E-02	8.571E+00		
113	T	3.462E+01	1.814E+01	-8.658E+00		
113	M	-7.639E-02	3.796E-01	1.007E+00	9.483E+00	-1.821E+00
113	B	-3.478E+01	-1.738E+01	1.067E+01		
114	T	7.477E+01	3.105E+01	-5.452E+00		
114	M	3.277E-01	1.194E+00	1.352E+00	6.107E+00	-2.670E+00
114	B	-7.411E+01	-2.866E+01	8.155E+00		
115	T	9.652E+01	3.757E+01	2.428E+00		
115	M	-1.240E-01	1.126E+00	2.899E+00	2.701E+00	-3.204E+00
115	B	-9.676E+01	-3.532E+01	3.370E+00		
116	T	1.036E+02	3.485E+01	1.048E+01		
116	M	2.196E+00	-3.245E+00	3.304E+00	-7.121E-01	-3.878E+00
116	B	-9.917E+01	-4.133E+01	-3.873E+00		
117	T	9.094E+01	2.960E+01	9.347E+00		
117	M	2.072E+00	-3.596E+00	-3.254E+00	-4.902E+00	-4.736E+00
117	B	-8.680E+01	-3.679E+01	-1.586E+01		
118	T	5.515E+01	2.068E+01	8.598E+00		
118	M	-5.084E-01	3.727E-01	-3.305E+00	-1.066E+01	-4.550E+00
118	B	-5.617E+01	-1.993E+01	-1.521E+01		
119	T	-6.913E-01	7.330E-01	3.000E+00		
119	M	-3.160E-01	6.093E-02	-2.552E+00	-1.668E+01	-1.867E+00
119	B	5.940E-02	-6.111E-01	-8.103E+00		
120	T	-7.182E+01	-2.067E+01	-2.677E+00		
120	M	-7.535E-01	-9.015E-01	-3.347E+00	-2.159E+01	4.314E+00
120	B	7.031E+01	1.887E+01	-4.016E+00		
121	T	-1.807E+02	-4.615E+01	7.321E+00		
121	M	-2.050E+00	4.020E-01	-3.623E+00	-2.676E+01	7.554E+00
121	B	1.766E+02	4.696E+01	-1.457E+01		
122	T	-1.193E+02	-2.434E+01	-9.253E+00		
122	M	-1.646E+00	2.076E-02	3.335E-01	1.549E+01	3.774E+00
122	B	1.160E+02	2.438E+01	9.920E+00		
123	T	-2.626E+01	2.016E+00	-7.444E+00		
123	M	-1.137E+00	1.828E-02	4.477E-01	1.129E+01	1.405E-01
123	B	2.399E+01	-1.979E+00	8.339E+00		
124	T	3.281E+01	1.029E+01	-9.676E+00		
124	M	-5.187E-01	2.274E-01	6.126E-01	8.946E+00	-3.451E+00
124	B	-3.384E+01	-9.835E+00	1.090E+01		

========== I M A G E S 3 D ==========
= Copyright (c) 1984 Celestial Software Inc. =
==========
COMBINE RESULTS Version 2.0 07/01/90

Combined Plate Stresses

Plate		Sigma-X	Sigma-Y	Tau-XY	Tau-XZ	Tau-YZ
125	T	7.512E+01	1.692E+01	-6.049E+00		
125	M	7.725E-02	5.760E-01	1.277E+00	5.744E+00	-3.887E+00
125	B	-7.497E+01	-1.577E+01	8.603E+00		
126	T	9.965E+01	2.024E+01	1.774E+00		
126	M	1.297E+00	3.232E-01	2.322E+00	2.456E+00	-4.492E+00
126	B	-9.705E+01	-1.959E+01	2.870E+00		
127	T	1.054E+02	1.888E+01	8.778E+00		
127	M	2.950E+00	-1.265E+00	1.704E+00	-1.077E+00	-4.862E+00
127	B	-9.950E+01	-2.141E+01	-5.371E+00		
128	T	9.001E+01	1.514E+01	1.050E+01		
128	M	2.998E+00	-1.429E+00	-1.432E+00	-5.223E+00	-4.896E+00
128	B	-8.401E+01	-1.800E+01	-1.337E+01		
129	T	5.072E+01	9.081E+00	8.878E+00		
129	M	1.294E+00	-7.535E-02	-2.471E+00	-1.002E+01	-4.129E+00
129	B	-4.813E+01	-9.232E+00	-1.382E+01		
130	T	-7.748E+00	-6.227E-02	3.698E+00		
130	M	-2.103E-01	8.962E-02	-2.257E+00	-1.415E+01	-2.143E+00
130	B	7.327E+00	2.415E-01	-8.213E+00		
131	T	-7.355E+01	-9.971E+00	-6.731E-01		
131	M	-1.391E+00	-3.993E-01	-2.522E+00	-1.597E+01	3.764E+00
131	B	7.077E+01	9.173E+00	-4.370E+00		
132	T	-1.537E+02	-3.195E+01	5.486E+00		
132	M	-2.928E+00	2.283E-01	-2.569E+00	-1.801E+01	6.424E+00
132	B	1.478E+02	3.240E+01	-1.063E+01		
133	T	-1.077E+02	-1.539E+01	-4.684E+00		
133	M	-2.430E+00	-7.260E-02	1.408E-01	9.623E+00	2.839E+00
133	B	1.029E+02	1.524E+01	4.965E+00		
134	T	-3.261E+01	3.262E+00	-8.118E+00		
134	M	-1.831E+00	1.783E-02	1.205E-01	1.726E+01	6.465E-01
134	B	2.895E+01	-3.226E+00	8.359E+00		
135	T	3.045E+01	2.401E+00	-8.335E+00		
135	M	-1.261E+00	4.163E-02	2.161E-01	1.403E+01	-1.661E+00
135	B	-3.297E+01	-2.318E+00	8.767E+00		
136	T	7.491E+01	4.742E+00	-5.508E+00		
136	M	-6.386E-02	1.145E-01	5.395E-01	9.019E+00	-1.692E+00
136	B	-7.504E+01	-4.513E+00	6.587E+00		
137	T	1.009E+02	5.583E+00	1.708E-01		
137	M	2.262E+00	5.624E-02	9.905E-01	3.037E+00	-2.134E+00
137	B	-9.639E+01	-5.470E+00	1.810E+00		
138	T	1.072E+02	5.270E+00	5.489E+00		
138	M	4.818E+00	-2.313E-01	6.918E-01	-3.602E+00	-2.200E+00
138	B	-9.754E+01	-5.733E+00	-4.106E+00		

========== I M A G E S 3 D ==========
= Copyright (c) 1984 Celestial Software Inc. =
==========
COMBINE RESULTS Version 2.0 07/01/90

Combined Plate Stresses

Plate		Sigma-X	Sigma-Y	Tau-XY	Tau-XZ	Tau-YZ
139	T	9.032E+01	4.085E+00	8.133E+00		
139	M	5.131E+00	-2.662E-01	-5.188E-01	-9.899E+00	-1.950E+00
139	B	-8.005E+01	-4.617E+00	-9.171E+00		
140	T	4.873E+01	2.194E+00	8.185E+00		
140	M	3.003E+00	-2.809E-02	-1.001E+00	-1.500E+01	-1.290E+00
140	B	-4.272E+01	-2.250E+00	-1.019E+01		
141	T	-1.201E+01	-8.501E-01	5.623E+00		
141	M	4.657E-01	1.231E-02	-9.244E-01	-1.819E+01	-7.338E-01
141	B	1.294E+01	8.747E-01	-7.472E+00		
142	T	-7.644E+01	-8.809E-01	3.777E+00		
142	M	-1.782E+00	-6.848E-02	-9.678E-01	-1.778E+01	2.727E+00
142	B	7.287E+01	7.440E-01	-5.712E+00		
143	T	-1.328E+02	-1.761E+01	1.100E+00		
143	M	-5.146E+00	-5.956E-02	-1.236E+00	-7.258E+00	3.942E+00
143	B	1.225E+02	1.750E+01	-3.572E+00		

ATTACHMENT 3

Static Analysis of Pit Wall

50 pgs including this pg

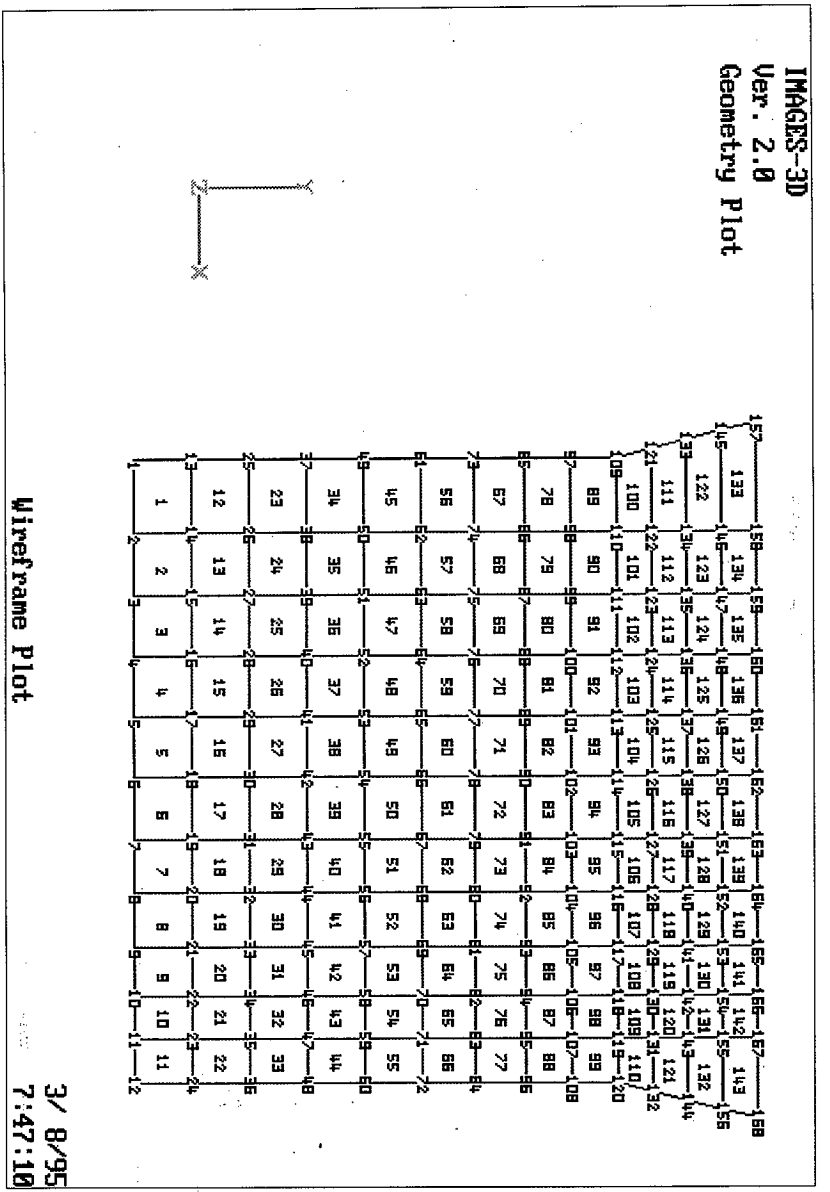
IMAGES-3D
Ver. 2.0
Geometry Plot
Wireframe Plot
3/ 8/95
7:47:10

```
=============== I M A G E S  3 D ===============
= Copyright (c) 1984   Celestial Software Inc. =
================================================
```

CHECK GEOMETRY Version 2.0 07/01/90

MATERIAL PROPERTIES

Material No	Modulus of Elasticity	Weight Density	Coeff of Thermal Exp.	Poisson's Ratio	Shear Web Modulus
1	3.46000E+05	8.68000E-02	5.50000E-06	2.50E-01	0.00000E+00
2	4.10000E+05	8.68000E-02	5.50000E-06	2.50E-01	0.00000E+00

NODE COORDINATES

Node	X-Coord.	Y-Coord.	Z-Coord.
1	6.00000E+00	0.00000E+00	0.00000E+00
2	1.80000E+01	0.00000E+00	0.00000E+00
3	2.80000E+01	0.00000E+00	0.00000E+00
4	3.80000E+01	0.00000E+00	0.00000E+00
5	4.80000E+01	0.00000E+00	0.00000E+00
6	5.80000E+01	0.00000E+00	0.00000E+00
7	6.80000E+01	0.00000E+00	0.00000E+00
8	7.70000E+01	0.00000E+00	0.00000E+00
9	8.60000E+01	0.00000E+00	0.00000E+00
10	9.40000E+01	0.00000E+00	0.00000E+00
11	1.01000E+02	0.00000E+00	0.00000E+00
12	1.08000E+02	0.00000E+00	0.00000E+00
13	6.00000E+00	1.00000E+01	0.00000E+00
14	1.80000E+01	1.00000E+01	0.00000E+00
15	2.80000E+01	1.00000E+01	0.00000E+00
16	3.80000E+01	1.00000E+01	0.00000E+00
17	4.80000E+01	1.00000E+01	0.00000E+00
18	5.80000E+01	1.00000E+01	0.00000E+00
19	6.80000E+01	1.00000E+01	0.00000E+00
20	7.70000E+01	1.00000E+01	0.00000E+00
21	8.60000E+01	1.00000E+01	0.00000E+00
22	9.40000E+01	1.00000E+01	0.00000E+00
23	1.01000E+02	1.00000E+01	0.00000E+00
24	1.08000E+02	1.00000E+01	0.00000E+00
25	6.00000E+00	2.00000E+01	0.00000E+00
26	1.80000E+01	2.00000E+01	0.00000E+00
27	2.80000E+01	2.00000E+01	0.00000E+00
28	3.80000E+01	2.00000E+01	0.00000E+00
29	4.80000E+01	2.00000E+01	0.00000E+00

========== I M A G E S 3 D ==========
= Copyright (c) 1984 Celestial Software Inc. =
==========

CHECK GEOMETRY Version 2.0 07/01/90

Node	X-Coord.	Y-Coord.	Z-Coord.
30	5.80000E+01	2.00000E+01	0.00000E+00
31	6.80000E+01	2.00000E+01	0.00000E+00
32	7.70000E+01	2.00000E+01	0.00000E+00
33	8.60000E+01	2.00000E+01	0.00000E+00
34	9.40000E+01	2.00000E+01	0.00000E+00
35	1.01000E+02	2.00000E+01	0.00000E+00
36	1.08000E+02	2.00000E+01	0.00000E+00
37	6.00000E+00	3.00000E+01	0.00000E+00
38	1.80000E+01	3.00000E+01	0.00000E+00
39	2.80000E+01	3.00000E+01	0.00000E+00
40	3.80000E+01	3.00000E+01	0.00000E+00
41	4.80000E+01	3.00000E+01	0.00000E+00
42	5.80000E+01	3.00000E+01	0.00000E+00
43	6.80000E+01	3.00000E+01	0.00000E+00
44	7.70000E+01	3.00000E+01	0.00000E+00
45	8.60000E+01	3.00000E+01	0.00000E+00
46	9.40000E+01	3.00000E+01	0.00000E+00
47	1.01000E+02	3.00000E+01	0.00000E+00
48	1.08000E+02	3.00000E+01	0.00000E+00
49	6.00000E+00	4.00000E+01	0.00000E+00
50	1.80000E+01	4.00000E+01	0.00000E+00
51	2.80000E+01	4.00000E+01	0.00000E+00
52	3.80000E+01	4.00000E+01	0.00000E+00
53	4.80000E+01	4.00000E+01	0.00000E+00
54	5.80000E+01	4.00000E+01	0.00000E+00
55	6.80000E+01	4.00000E+01	0.00000E+00
56	7.70000E+01	4.00000E+01	0.00000E+00
57	8.60000E+01	4.00000E+01	0.00000E+00
58	9.40000E+01	4.00000E+01	0.00000E+00
59	1.01000E+02	4.00000E+01	0.00000E+00
60	1.08000E+02	4.00000E+01	0.00000E+00
61	6.00000E+00	5.00000E+01	0.00000E+00
62	1.80000E+01	5.00000E+01	0.00000E+00
63	2.80000E+01	5.00000E+01	0.00000E+00
64	3.80000E+01	5.00000E+01	0.00000E+00
65	4.80000E+01	5.00000E+01	0.00000E+00
66	5.80000E+01	5.00000E+01	0.00000E+00
67	6.80000E+01	5.00000E+01	0.00000E+00
68	7.70000E+01	5.00000E+01	0.00000E+00
69	8.60000E+01	5.00000E+01	0.00000E+00
70	9.40000E+01	5.00000E+01	0.00000E+00
71	1.01000E+02	5.00000E+01	0.00000E+00

========== I M A G E S 3 D ==========
= Copyright (c) 1984 Celestial Software Inc. =
==========

CHECK GEOMETRY Version 2.0 07/01/90

Node	X-Coord.	Y-Coord.	Z-Coord.
72	1.08000E+02	5.00000E+01	0.00000E+00
73	6.00000E+00	5.90000E+01	0.00000E+00
74	1.80000E+01	5.90000E+01	0.00000E+00
75	2.80000E+01	5.90000E+01	0.00000E+00
76	3.80000E+01	5.90000E+01	0.00000E+00
77	4.80000E+01	5.90000E+01	0.00000E+00
78	5.80000E+01	5.90000E+01	0.00000E+00
79	6.80000E+01	5.90000E+01	0.00000E+00
80	7.70000E+01	5.90000E+01	0.00000E+00
81	8.60000E+01	5.90000E+01	0.00000E+00
82	9.40000E+01	5.90000E+01	0.00000E+00
83	1.01000E+02	5.90000E+01	0.00000E+00
84	1.08000E+02	5.90000E+01	0.00000E+00
85	6.00000E+00	6.80000E+01	0.00000E+00
86	1.80000E+01	6.80000E+01	0.00000E+00
87	2.80000E+01	6.80000E+01	0.00000E+00
88	3.80000E+01	6.80000E+01	0.00000E+00
89	4.80000E+01	6.80000E+01	0.00000E+00
90	5.80000E+01	6.80000E+01	0.00000E+00
91	6.80000E+01	6.80000E+01	0.00000E+00
92	7.70000E+01	6.80000E+01	0.00000E+00
93	8.60000E+01	6.80000E+01	0.00000E+00
94	9.40000E+01	6.80000E+01	0.00000E+00
95	1.01000E+02	6.80000E+01	0.00000E+00
96	1.08000E+02	6.80000E+01	0.00000E+00
97	6.00000E+00	7.60000E+01	0.00000E+00
98	1.80000E+01	7.60000E+01	0.00000E+00
99	2.80000E+01	7.60000E+01	0.00000E+00
100	3.80000E+01	7.60000E+01	0.00000E+00
101	4.80000E+01	7.60000E+01	0.00000E+00
102	5.80000E+01	7.60000E+01	0.00000E+00
103	6.80000E+01	7.60000E+01	0.00000E+00
104	7.70000E+01	7.60000E+01	0.00000E+00
105	8.60000E+01	7.60000E+01	0.00000E+00
106	9.40000E+01	7.60000E+01	0.00000E+00
107	1.01000E+02	7.60000E+01	0.00000E+00
108	1.08000E+02	7.60000E+01	0.00000E+00
109	6.00000E+00	8.40000E+01	0.00000E+00
110	1.80000E+01	8.40000E+01	0.00000E+00
111	2.80000E+01	8.40000E+01	0.00000E+00
112	3.80000E+01	8.40000E+01	0.00000E+00
113	4.80000E+01	8.40000E+01	0.00000E+00

========== I M A G E S 3 D ==========
= Copyright (c) 1984 Celestial Software Inc. =
==========

CHECK GEOMETRY Version 2.0 07/01/90

Node	X-Coord.	Y-Coord.	Z-Coord.
114	5.80000E+01	8.40000E+01	0.00000E+00
115	6.80000E+01	8.40000E+01	0.00000E+00
116	7.70000E+01	8.40000E+01	0.00000E+00
117	8.60000E+01	8.40000E+01	0.00000E+00
118	9.40000E+01	8.40000E+01	0.00000E+00
119	1.01000E+02	8.40000E+01	0.00000E+00
120	1.08000E+02	8.40000E+01	0.00000E+00
121	4.50000E+00	9.00000E+01	0.00000E+00
122	1.80000E+01	9.00000E+01	0.00000E+00
123	2.80000E+01	9.00000E+01	0.00000E+00
124	3.80000E+01	9.00000E+01	0.00000E+00
125	4.80000E+01	9.00000E+01	0.00000E+00
126	5.80000E+01	9.00000E+01	0.00000E+00
127	6.80000E+01	9.00000E+01	0.00000E+00
128	7.70000E+01	9.00000E+01	0.00000E+00
129	8.60000E+01	9.00000E+01	0.00000E+00
130	9.40000E+01	9.00000E+01	0.00000E+00
131	1.01000E+02	9.00000E+01	0.00000E+00
132	1.09500E+02	9.00000E+01	0.00000E+00
133	3.00000E+00	9.60000E+01	0.00000E+00
134	1.80000E+01	9.60000E+01	0.00000E+00
135	2.80000E+01	9.60000E+01	0.00000E+00
136	3.80000E+01	9.60000E+01	0.00000E+00
137	4.80000E+01	9.60000E+01	0.00000E+00
138	5.80000E+01	9.60000E+01	0.00000E+00
139	6.80000E+01	9.60000E+01	0.00000E+00
140	7.70000E+01	9.60000E+01	0.00000E+00
141	8.60000E+01	9.60000E+01	0.00000E+00
142	9.40000E+01	9.60000E+01	0.00000E+00
143	1.01000E+02	9.60000E+01	0.00000E+00
144	1.11000E+02	9.60000E+01	0.00000E+00
145	1.50000E+00	1.02000E+02	0.00000E+00
146	1.80000E+01	1.02000E+02	0.00000E+00
147	2.80000E+01	1.02000E+02	0.00000E+00
148	3.80000E+01	1.02000E+02	0.00000E+00
149	4.80000E+01	1.02000E+02	0.00000E+00
150	5.80000E+01	1.02000E+02	0.00000E+00
151	6.80000E+01	1.02000E+02	0.00000E+00
152	7.70000E+01	1.02000E+02	0.00000E+00
153	8.60000E+01	1.02000E+02	0.00000E+00
154	9.40000E+01	1.02000E+02	0.00000E+00
155	1.01000E+02	1.02000E+02	0.00000E+00

========== I M A G E S 3 D ==========
= Copyright (c) 1984 Celestial Software Inc. =
==========

CHECK GEOMETRY Version 2.0 07/01/90

Node	X-Coord.	Y-Coord.	Z-Coord.
156	1.12500E+02	1.02000E+02	0.00000E+00
157	0.00000E+00	1.08000E+02	0.00000E+00
158	1.80000E+01	1.08000E+02	0.00000E+00
159	2.80000E+01	1.08000E+02	0.00000E+00
160	3.80000E+01	1.08000E+02	0.00000E+00
161	4.80000E+01	1.08000E+02	0.00000E+00
162	5.80000E+01	1.08000E+02	0.00000E+00
163	6.80000E+01	1.08000E+02	0.00000E+00
164	7.70000E+01	1.08000E+02	0.00000E+00
165	8.60000E+01	1.08000E+02	0.00000E+00
166	9.40000E+01	1.08000E+02	0.00000E+00
167	1.01000E+02	1.08000E+02	0.00000E+00
168	1.14000E+02	1.08000E+02	0.00000E+00

PLATE ELEMENT CONNECTIVITY

	Plate No.	Nodes I	J	K	L	Mat No.	Thickness	Area	Shear Web Thickness	Aspect Ratio	Plate Type
QUAD	1	1	2	14	13	1	1.200E+01	1.200E+02		1.200E+00	M+B
QUAD	2	2	3	15	14	1	1.200E+01	1.000E+02		1.000E+00	M+B
QUAD	3	3	4	16	15	1	1.200E+01	1.000E+02		1.000E+00	M+B
QUAD	4	4	5	17	16	1	1.200E+01	1.000E+02		1.000E+00	M+B
QUAD	5	5	6	18	17	1	1.200E+01	1.000E+02		1.000E+00	M+B
QUAD	6	6	7	19	18	1	1.200E+01	1.000E+02		1.000E+00	M+B
QUAD	7	7	8	20	19	1	1.200E+01	9.000E+01		9.000E-01	M+B
QUAD	8	8	9	21	20	1	1.200E+01	9.000E+01		9.000E-01	M+B
QUAD	9	9	10	22	21	1	1.200E+01	8.000E+01		8.000E-01	M+B
QUAD	10	10	11	23	22	1	1.200E+01	7.000E+01		7.000E-01	M+B
QUAD	11	11	12	24	23	1	1.200E+01	7.000E+01		7.000E-01	M+B
QUAD	12	13	14	26	25	1	1.200E+01	1.200E+02		1.200E+00	M+B
QUAD	13	14	15	27	26	1	1.200E+01	1.000E+02		1.000E+00	M+B
QUAD	14	15	16	28	27	1	1.200E+01	1.000E+02		1.000E+00	M+B
QUAD	15	16	17	29	28	1	1.200E+01	1.000E+02		1.000E+00	M+B
QUAD	16	17	18	30	29	1	1.200E+01	1.000E+02		1.000E+00	M+B
QUAD	17	18	19	31	30	1	1.200E+01	1.000E+02		1.000E+00	M+B
QUAD	18	19	20	32	31	1	1.200E+01	9.000E+01		9.000E-01	M+B
QUAD	19	20	21	33	32	1	1.200E+01	9.000E+01		9.000E-01	M+B
QUAD	20	21	22	34	33	1	1.200E+01	8.000E+01		8.000E-01	M+B
QUAD	21	22	23	35	34	1	1.200E+01	7.000E+01		7.000E-01	M+B

========== I M A G E S 3 D ==========
= Copyright (c) 1984 Celestial Software Inc. =
==========

CHECK GEOMETRY Version 2.0 07/01/90

	Plate No.	Nodes I	J	K	L	Mat No.	Thickness	Area	Shear Web Thickness	Aspect Ratio	Plate Type
QUAD	22	23	24	36	35	1	1.200E+01	7.000E+01		7.000E-01	M+B
QUAD	23	25	26	38	37	1	1.200E+01	1.200E+02		1.200E+00	M+B
QUAD	24	26	27	39	38	1	1.200E+01	1.000E+02		1.000E+00	M+B
QUAD	25	27	28	40	39	1	1.200E+01	1.000E+02		1.000E+00	M+B
QUAD	26	28	29	41	40	1	1.200E+01	1.000E+02		1.000E+00	M+B
QUAD	27	29	30	42	41	1	1.200E+01	1.000E+02		1.000E+00	M+B
QUAD	28	30	31	43	42	1	1.200E+01	1.000E+02		1.000E+00	M+B
QUAD	29	31	32	44	43	1	1.200E+01	9.000E+01		9.000E-01	M+B
QUAD	30	32	33	45	44	1	1.200E+01	9.000E+01		9.000E-01	M+B
QUAD	31	33	34	46	45	1	1.200E+01	8.000E+01		8.000E-01	M+B
QUAD	32	34	35	47	46	1	1.200E+01	7.000E+01		7.000E-01	M+B
QUAD	33	35	36	48	47	1	1.200E+01	7.000E+01		7.000E-01	M+B
QUAD	34	37	38	50	49	1	1.200E+01	1.200E+02		1.200E+00	M+B
QUAD	35	38	39	51	50	1	1.200E+01	1.000E+02		1.000E+00	M+B
QUAD	36	39	40	52	51	1	1.200E+01	1.000E+02		1.000E+00	M+B
QUAD	37	40	41	53	52	1	1.200E+01	1.000E+02		1.000E+00	M+B
QUAD	38	41	42	54	53	1	1.200E+01	1.000E+02		1.000E+00	M+B
QUAD	39	42	43	55	54	1	1.200E+01	1.000E+02		1.000E+00	M+B
QUAD	40	43	44	56	55	1	1.200E+01	9.000E+01		9.000E-01	M+B
QUAD	41	44	45	57	56	1	1.200E+01	9.000E+01		9.000E-01	M+B
QUAD	42	45	46	58	57	1	1.200E+01	8.000E+01		8.000E-01	M+B
QUAD	43	46	47	59	58	1	1.200E+01	7.000E+01		7.000E-01	M+B
QUAD	44	47	48	60	59	1	1.200E+01	7.000E+01		7.000E-01	M+B
QUAD	45	49	50	62	61	1	1.200E+01	1.200E+02		1.200E+00	M+B
QUAD	46	50	51	63	62	1	1.200E+01	1.000E+02		1.000E+00	M+B
QUAD	47	51	52	64	63	1	1.200E+01	1.000E+02		1.000E+00	M+B
QUAD	48	52	53	65	64	1	1.200E+01	1.000E+02		1.000E+00	M+B
QUAD	49	53	54	66	65	1	1.200E+01	1.000E+02		1.000E+00	M+B
QUAD	50	54	55	67	66	1	1.200E+01	1.000E+02		1.000E+00	M+B
QUAD	51	55	56	68	67	1	1.200E+01	9.000E+01		9.000E-01	M+B
QUAD	52	56	57	69	68	1	1.200E+01	9.000E+01		9.000E-01	M+B
QUAD	53	57	58	70	69	1	1.200E+01	8.000E+01		8.000E-01	M+B
QUAD	54	58	59	71	70	1	1.200E+01	7.000E+01		7.000E-01	M+B
QUAD	55	59	60	72	71	1	1.200E+01	7.000E+01		7.000E-01	M+B
QUAD	56	61	62	74	73	1	1.200E+01	1.080E+02		1.333E+00	M+B
QUAD	57	62	63	75	74	1	1.200E+01	9.000E+01		1.111E+00	M+B
QUAD	58	63	64	76	75	1	1.200E+01	9.000E+01		1.111E+00	M+B
QUAD	59	64	65	77	76	1	1.200E+01	9.000E+01		1.111E+00	M+B
QUAD	60	65	66	78	77	1	1.200E+01	9.000E+01		1.111E+00	M+B
QUAD	61	66	67	79	78	1	1.200E+01	9.000E+01		1.111E+00	M+B
QUAD	62	67	68	80	79	1	1.200E+01	8.100E+01		1.000E+00	M+B

========== I M A G E S 3 D ==========
= Copyright (c) 1984 Celestial Software Inc. =
==========

CHECK GEOMETRY Version 2.0 07/01/90

	Plate No.	Nodes I	J	K	L	Mat No.	Thickness	Area	Shear Web Thickness	Aspect Ratio	Plate Type
QUAD	63	68	69	81	80	1	1.200E+01	8.100E+01		1.000E+00	M+B
QUAD	64	69	70	82	81	1	1.200E+01	7.200E+01		8.889E-01	M+B
QUAD	65	70	71	83	82	1	1.200E+01	6.300E+01		7.778E-01	M+B
QUAD	66	71	72	84	83	1	1.200E+01	6.300E+01		7.778E-01	M+B
QUAD	67	73	74	86	85	1	1.200E+01	1.080E+02		1.333E+00	M+B
QUAD	68	74	75	87	86	1	1.200E+01	9.000E+01		1.111E+00	M+B
QUAD	69	75	76	88	87	1	1.200E+01	9.000E+01		1.111E+00	M+B
QUAD	70	76	77	89	88	1	1.200E+01	9.000E+01		1.111E+00	M+B
QUAD	71	77	78	90	89	1	1.200E+01	9.000E+01		1.111E+00	M+B
QUAD	72	78	79	91	90	1	1.200E+01	9.000E+01		1.111E+00	M+B
QUAD	73	79	80	92	91	1	1.200E+01	8.100E+01		1.000E+00	M+B
QUAD	74	80	81	93	92	1	1.200E+01	8.100E+01		1.000E+00	M+B
QUAD	75	81	82	94	93	1	1.200E+01	7.200E+01		8.889E-01	M+B
QUAD	76	82	83	95	94	1	1.200E+01	6.300E+01		7.778E-01	M+B
QUAD	77	83	84	96	95	1	1.200E+01	6.300E+01		7.778E-01	M+B
QUAD	78	85	86	98	97	1	1.200E+01	9.600E+01		1.500E+00	M+B
QUAD	79	86	87	99	98	1	1.200E+01	8.000E+01		1.250E+00	M+B
QUAD	80	87	88	100	99	1	1.200E+01	8.000E+01		1.250E+00	M+B
QUAD	81	88	89	101	100	1	1.200E+01	8.000E+01		1.250E+00	M+B
QUAD	82	89	90	102	101	1	1.200E+01	8.000E+01		1.250E+00	M+B
QUAD	83	90	91	103	102	1	1.200E+01	8.000E+01		1.250E+00	M+B
QUAD	84	91	92	104	103	1	1.200E+01	7.200E+01		1.125E+00	M+B
QUAD	85	92	93	105	104	1	1.200E+01	7.200E+01		1.125E+00	M+B
QUAD	86	93	94	106	105	1	1.200E+01	6.400E+01		1.000E+00	M+B
QUAD	87	94	95	107	106	1	1.200E+01	5.600E+01		8.750E-01	M+B
QUAD	88	95	96	108	107	1	1.200E+01	5.600E+01		8.750E-01	M+B
QUAD	89	97	98	110	109	1	1.200E+01	9.600E+01		1.500E+00	M+B
QUAD	90	98	99	111	110	1	1.200E+01	8.000E+01		1.250E+00	M+B
QUAD	91	99	100	112	111	1	1.200E+01	8.000E+01		1.250E+00	M+B
QUAD	92	100	101	113	112	1	1.200E+01	8.000E+01		1.250E+00	M+B
QUAD	93	101	102	114	113	1	1.200E+01	8.000E+01		1.250E+00	M+B
QUAD	94	102	103	115	114	1	1.200E+01	8.000E+01		1.250E+00	M+B
QUAD	95	103	104	116	115	1	1.200E+01	7.200E+01		1.125E+00	M+B
QUAD	96	104	105	117	116	1	1.200E+01	7.200E+01		1.125E+00	M+B
QUAD	97	105	106	118	117	1	1.200E+01	6.400E+01		1.000E+00	M+B
QUAD	98	106	107	119	118	1	1.200E+01	5.600E+01		8.750E-01	M+B
QUAD	99	107	108	120	119	1	1.200E+01	5.600E+01		8.750E-01	M+B
QUAD	100	109	110	122	121	2	7.630E+00	7.650E+01		2.109E+00	M+B
QUAD	101	110	111	123	122	2	7.630E+00	6.000E+01		1.667E+00	M+B
QUAD	102	111	112	124	123	2	7.630E+00	6.000E+01		1.667E+00	M+B
QUAD	103	112	113	125	124	2	7.630E+00	6.000E+01		1.667E+00	M+B

========== I M A G E S 3 D ==========
= Copyright (c) 1984 Celestial Software Inc. =
==========

CHECK GEOMETRY Version 2.0 07/01/90

	Plate No.	Nodes I	J	K	L	Mat No.	Thickness	Area	Shear Web Thickness	Aspect Ratio	Plate Type
QUAD	104	113	114	126	125	2	7.630E+00	6.000E+01		1.667E+00	M+B
QUAD	105	114	115	127	126	2	7.630E+00	6.000E+01		1.667E+00	M+B
QUAD	106	115	116	128	127	2	7.630E+00	5.400E+01		1.500E+00	M+B
QUAD	107	116	117	129	128	2	7.630E+00	5.400E+01		1.500E+00	M+B
QUAD	108	117	118	130	129	2	7.630E+00	4.800E+01		1.333E+00	M+B
QUAD	109	118	119	131	130	2	7.630E+00	4.200E+01		1.167E+00	M+B
QUAD	110	119	120	132	131	2	7.630E+00	4.650E+01		1.282E+00	M+B
QUAD	111	121	122	134	133	2	7.630E+00	8.550E+01		2.357E+00	M+B
QUAD	112	122	123	135	134	2	7.630E+00	6.000E+01		1.667E+00	M+B
QUAD	113	123	124	136	135	2	7.630E+00	6.000E+01		1.667E+00	M+B
QUAD	114	124	125	137	136	2	7.630E+00	6.000E+01		1.667E+00	M+B
QUAD	115	125	126	138	137	2	7.630E+00	6.000E+01		1.667E+00	M+B
QUAD	116	126	127	139	138	2	7.630E+00	6.000E+01		1.667E+00	M+B
QUAD	117	127	128	140	139	2	7.630E+00	5.400E+01		1.500E+00	M+B
QUAD	118	128	129	141	140	2	7.630E+00	5.400E+01		1.500E+00	M+B
QUAD	119	129	130	142	141	2	7.630E+00	4.800E+01		1.333E+00	M+B
QUAD	120	130	131	143	142	2	7.630E+00	4.200E+01		1.167E+00	M+B
QUAD	121	131	132	144	143	2	7.630E+00	5.550E+01		1.530E+00	M+B
QUAD	122	133	134	146	145	2	7.630E+00	9.450E+01		2.605E+00	M+B
QUAD	123	134	135	147	146	2	7.630E+00	6.000E+01		1.667E+00	M+B
QUAD	124	135	136	148	147	2	7.630E+00	6.000E+01		1.667E+00	M+B
QUAD	125	136	137	149	148	2	7.630E+00	6.000E+01		1.667E+00	M+B
QUAD	126	137	138	150	149	2	7.630E+00	6.000E+01		1.667E+00	M+B
QUAD	127	138	139	151	150	2	7.630E+00	6.000E+01		1.667E+00	M+B
QUAD	128	139	140	152	151	2	7.630E+00	5.400E+01		1.500E+00	M+B
QUAD	129	140	141	153	152	2	7.630E+00	5.400E+01		1.500E+00	M+B
QUAD	130	141	142	154	153	2	7.630E+00	4.800E+01		1.333E+00	M+B
QUAD	131	142	143	155	154	2	7.630E+00	4.200E+01		1.167E+00	M+B
QUAD	132	143	144	156	155	2	7.630E+00	6.450E+01		1.778E+00	M+B
QUAD	133	145	146	158	157	2	7.630E+00	1.035E+02		2.853E+00	M+B
QUAD	134	146	147	159	158	2	7.630E+00	6.000E+01		1.667E+00	M+B
QUAD	135	147	148	160	159	2	7.630E+00	6.000E+01		1.667E+00	M+B
QUAD	136	148	149	161	160	2	7.630E+00	6.000E+01		1.667E+00	M+B
QUAD	137	149	150	162	161	2	7.630E+00	6.000E+01		1.667E+00	M+B
QUAD	138	150	151	163	162	2	7.630E+00	6.000E+01		1.667E+00	M+B
QUAD	139	151	152	164	163	2	7.630E+00	5.400E+01		1.500E+00	M+B
QUAD	140	152	153	165	164	2	7.630E+00	5.400E+01		1.500E+00	M+B
QUAD	141	153	154	166	165	2	7.630E+00	4.800E+01		1.333E+00	M+B
QUAD	142	154	155	167	166	2	7.630E+00	4.200E+01		1.167E+00	M+B
QUAD	143	155	156	168	167	2	7.630E+00	7.350E+01		2.026E+00	M+B

========== I M A G E S 3 D ==========
= Copyright (c) 1984 Celestial Software Inc. =
==========

CHECK GEOMETRY Version 2.0 07/01/90

RESTRAINTS

Node No	Global/Local	Restraint Directions
1	GLOBAL	X Y Z RX RY RZ
2	GLOBAL	X Y Z RX RY RZ
3	GLOBAL	X Y Z RX RY RZ
4	GLOBAL	X Y Z RX RY RZ
5	GLOBAL	X Y Z RX RY RZ
6	GLOBAL	X Y Z RX RY RZ
7	GLOBAL	X Y Z RX RY RZ
8	GLOBAL	X Y Z RX RY RZ
9	GLOBAL	X Y Z RX RY RZ
10	GLOBAL	X Y Z RX RY RZ
11	GLOBAL	X Y Z RX RY RZ
12	GLOBAL	X Y Z RX RY RZ
13	GLOBAL	X Y Z RX RY RZ
24	GLOBAL	X Y Z RX RY RZ
25	GLOBAL	X Y Z RX RY RZ
36	GLOBAL	X Y Z RX RY RZ
37	GLOBAL	X Y Z RX RY RZ
48	GLOBAL	X Y Z RX RY RZ
49	GLOBAL	X Y Z RX RY RZ
60	GLOBAL	X Y Z RX RY RZ
61	GLOBAL	X Y Z RX RY RZ
72	GLOBAL	X Y Z RX RY RZ
73	GLOBAL	X Y Z RX RY RZ
84	GLOBAL	X Y Z RX RY RZ
85	GLOBAL	X Y Z RX RY RZ
96	GLOBAL	X Y Z RX RY RZ
97	GLOBAL	X Y Z RX RY RZ
108	GLOBAL	X Y Z RX RY RZ
109	GLOBAL	X Y Z RX RY RZ
120	GLOBAL	X Y Z RX RY RZ
121	GLOBAL	X Y Z RX RY RZ
132	GLOBAL	X Y Z RX RY RZ
133	GLOBAL	X Y Z RX RY RZ
144	GLOBAL	X Y Z RX RY RZ
145	GLOBAL	X Y Z RX RY RZ
156	GLOBAL	X Y Z RX RY RZ
157	GLOBAL	X Y Z RX RY RZ
168	GLOBAL	X Y Z RX RY RZ

========== I M A G E S 3 D ==========
= Copyright (c) 1984 Celestial Software Inc. =
==========

SOLVE DISPLACEMENTS Version 2.0 07/01/90

L O A D C A S E 1

LATERAL EARTH PRESSURE

GRAVITY LOADING

Direction	Gravity Factor	Load Factor
X	.0000E+00	.1000E+01
Y	.0000E+00	.1000E+01
Z	.0000E+00	.1000E+01

INERTIA LOADING

Direction	Translational Accel.	Rotational Accel.	Rotational Velocity	Origin
X	.0000E+00	.0000E+00	.0000E+00	.0000E+00
Y	.0000E+00	.0000E+00	.0000E+00	.0000E+00
Z	.0000E+00	.0000E+00	.0000E+00	.0000E+00

Gravity Acceleration = .3864E+03

REFERENCE TEMPERATURE = .0000E+00

PLATE TEMPERATURES/PRESSURES

Plate/Temp Plate/Pressure Plate/Lat. load	Node1 Node1 Side	Node2 Node2 Dir.	Node3 Node3 Node1	Node4 Node4 Node2
1	.0000E+00	.0000E+00	.0000E+00	.0000E+00
	.1610E+01	.1610E+01	.1442E+01	.1442E+01
2	.0000E+00	.0000E+00	.0000E+00	.0000E+00
	.1610E+01	.1610E+01	.1442E+01	.1442E+01
3	.0000E+00	.0000E+00	.0000E+00	.0000E+00
	.1610E+01	.1610E+01	.1442E+01	.1442E+01
4	.0000E+00	.0000E+00	.0000E+00	.0000E+00
	.1610E+01	.1610E+01	.1442E+01	.1442E+01
5	.0000E+00	.0000E+00	.0000E+00	.0000E+00
	.1610E+01	.1610E+01	.1442E+01	.1442E+01
6	.0000E+00	.0000E+00	.0000E+00	.0000E+00
	.1610E+01	.1610E+01	.1442E+01	.1442E+01

========== I M A G E S 3 D ==========
= Copyright (c) 1984 Celestial Software Inc. =
==========

SOLVE DISPLACEMENTS Version 2.0 07/01/90

L O A D C A S E 1

LATERAL EARTH PRESSURE

Plate/Temp Plate/Pressure Plate/Lat. load	Node1 Node1 Side	Node2 Node2 Dir.	Node3 Node3 Node1	Node4 Node4 Node2
7	.0000E+00	.0000E+00	.0000E+00	.0000E+00
	.1610E+01	.1610E+01	.1442E+01	.1442E+01
8	.0000E+00	.0000E+00	.0000E+00	.0000E+00
	.1610E+01	.1610E+01	.1442E+01	.1442E+01
9	.0000E+00	.0000E+00	.0000E+00	.0000E+00
	.1610E+01	.1610E+01	.1442E+01	.1442E+01
10	.0000E+00	.0000E+00	.0000E+00	.0000E+00
	.1610E+01	.1610E+01	.1442E+01	.1442E+01
11	.0000E+00	.0000E+00	.0000E+00	.0000E+00
	.1610E+01	.1610E+01	.1442E+01	.1442E+01
12	.0000E+00	.0000E+00	.0000E+00	.0000E+00
	.1442E+01	.1442E+01	.1275E+01	.1275E+01
13	.0000E+00	.0000E+00	.0000E+00	.0000E+00
	.1442E+01	.1442E+01	.1275E+01	.1275E+01
14	.0000E+00	.0000E+00	.0000E+00	.0000E+00
	.1442E+01	.1442E+01	.1275E+01	.1275E+01
15	.0000E+00	.0000E+00	.0000E+00	.0000E+00
	.1442E+01	.1442E+01	.1275E+01	.1275E+01
16	.0000E+00	.0000E+00	.0000E+00	.0000E+00
	.1442E+01	.1442E+01	.1275E+01	.1275E+01
17	.0000E+00	.0000E+00	.0000E+00	.0000E+00
	.1442E+01	.1442E+01	.1275E+01	.1275E+01
18	.0000E+00	.0000E+00	.0000E+00	.0000E+00
	.1442E+01	.1442E+01	.1275E+01	.1275E+01
19	.0000E+00	.0000E+00	.0000E+00	.0000E+00
	.1442E+01	.1442E+01	.1275E+01	.1275E+01
20	.0000E+00	.0000E+00	.0000E+00	.0000E+00
	.1442E+01	.1442E+01	.1275E+01	.1275E+01
21	.0000E+00	.0000E+00	.0000E+00	.0000E+00
	.1442E+01	.1442E+01	.1275E+01	.1275E+01
22	.0000E+00	.0000E+00	.0000E+00	.0000E+00
	.1442E+01	.1442E+01	.1275E+01	.1275E+01
23	.0000E+00	.0000E+00	.0000E+00	.0000E+00
	.1275E+01	.1275E+01	.1107E+01	.1107E+01
24	.0000E+00	.0000E+00	.0000E+00	.0000E+00
	.1275E+01	.1275E+01	.1107E+01	.1107E+01
25	.0000E+00	.0000E+00	.0000E+00	.0000E+00
	.1275E+01	.1275E+01	.1107E+01	.1107E+01
26	.0000E+00	.0000E+00	.0000E+00	.0000E+00
	.1275E+01	.1275E+01	.1107E+01	.1107E+01

========== I M A G E S 3 D ==========
= Copyright (c) 1984 Celestial Software Inc. =
==========

SOLVE DISPLACEMENTS Version 2.0 07/01/90

L O A D C A S E 1

LATERAL EARTH PRESSURE

Plate/Temp Plate/Pressure Plate/Lat. load	Node1 Node1 Side	Node2 Node2 Dir.	Node3 Node3 Node1	Node4 Node4 Node2
27	.0000E+00	.0000E+00	.0000E+00	.0000E+00
	.1275E+01	.1275E+01	.1107E+01	.1107E+01
28	.0000E+00	.0000E+00	.0000E+00	.0000E+00
	.1275E+01	.1275E+01	.1107E+01	.1107E+01
29	.0000E+00	.0000E+00	.0000E+00	.0000E+00
	.1275E+01	.1275E+01	.1107E+01	.1107E+01
30	.0000E+00	.0000E+00	.0000E+00	.0000E+00
	.1275E+01	.1275E+01	.1107E+01	.1107E+01
31	.0000E+00	.0000E+00	.0000E+00	.0000E+00
	.1275E+01	.1275E+01	.1107E+01	.1107E+01
32	.0000E+00	.0000E+00	.0000E+00	.0000E+00
	.1275E+01	.1275E+01	.1107E+01	.1107E+01
33	.0000E+00	.0000E+00	.0000E+00	.0000E+00
	.1275E+01	.1275E+01	.1107E+01	.1107E+01
34	.0000E+00	.0000E+00	.0000E+00	.0000E+00
	.1107E+01	.1107E+01	.9392E+00	.9392E+00
35	.0000E+00	.0000E+00	.0000E+00	.0000E+00
	.1107E+01	.1107E+01	.9392E+00	.9392E+00
36	.0000E+00	.0000E+00	.0000E+00	.0000E+00
	.1107E+01	.1107E+01	.9392E+00	.9392E+00
37	.0000E+00	.0000E+00	.0000E+00	.0000E+00
	.1107E+01	.1107E+01	.9392E+00	.9392E+00
38	.0000E+00	.0000E+00	.0000E+00	.0000E+00
	.1107E+01	.1107E+01	.9392E+00	.9392E+00
39	.0000E+00	.0000E+00	.0000E+00	.0000E+00
	.1107E+01	.1107E+01	.9392E+00	.9392E+00
40	.0000E+00	.0000E+00	.0000E+00	.0000E+00
	.1107E+01	.1107E+01	.9392E+00	.9392E+00
41	.0000E+00	.0000E+00	.0000E+00	.0000E+00
	.1107E+01	.1107E+01	.9392E+00	.9392E+00
42	.0000E+00	.0000E+00	.0000E+00	.0000E+00
	.1107E+01	.1107E+01	.9392E+00	.9392E+00
43	.0000E+00	.0000E+00	.0000E+00	.0000E+00
	.1107E+01	.1107E+01	.9392E+00	.9392E+00
44	.0000E+00	.0000E+00	.0000E+00	.0000E+00
	.1107E+01	.1107E+01	.9392E+00	.9392E+00
45	.0000E+00	.0000E+00	.0000E+00	.0000E+00
	.9392E+00	.9392E+00	.7715E+00	.7715E+00
46	.0000E+00	.0000E+00	.0000E+00	.0000E+00
	.9392E+00	.9392E+00	.7715E+00	.7715E+00

========== I M A G E S 3 D ==========
= Copyright (c) 1984 Celestial Software Inc. =
==========

SOLVE DISPLACEMENTS Version 2.0 07/01/90

L O A D C A S E 1

LATERAL EARTH PRESSURE

Plate/Temp Plate/Pressure Plate/Lat. load	Node1 Node1 Side	Node2 Node2 Dir.	Node3 Node3 Node1	Node4 Node4 Node2
47	.0000E+00	.0000E+00	.0000E+00	.0000E+00
	.9392E+00	.9392E+00	.7715E+00	.7715E+00
48	.0000E+00	.0000E+00	.0000E+00	.0000E+00
	.9392E+00	.9392E+00	.7715E+00	.7715E+00
49	.0000E+00	.0000E+00	.0000E+00	.0000E+00
	.9392E+00	.9392E+00	.7715E+00	.7715E+00
50	.0000E+00	.0000E+00	.0000E+00	.0000E+00
	.9392E+00	.9392E+00	.7715E+00	.7715E+00
51	.0000E+00	.0000E+00	.0000E+00	.0000E+00
	.9392E+00	.9392E+00	.7715E+00	.7715E+00
52	.0000E+00	.0000E+00	.0000E+00	.0000E+00
	.9392E+00	.9392E+00	.7715E+00	.7715E+00
53	.0000E+00	.0000E+00	.0000E+00	.0000E+00
	.9392E+00	.9392E+00	.7715E+00	.7715E+00
54	.0000E+00	.0000E+00	.0000E+00	.0000E+00
	.9392E+00	.9392E+00	.7715E+00	.7715E+00
55	.0000E+00	.0000E+00	.0000E+00	.0000E+00
	.9392E+00	.9392E+00	.7715E+00	.7715E+00
56	.0000E+00	.0000E+00	.0000E+00	.0000E+00
	.7715E+00	.7715E+00	.6205E+00	.6205E+00
57	.0000E+00	.0000E+00	.0000E+00	.0000E+00
	.7715E+00	.7715E+00	.6205E+00	.6205E+00
58	.0000E+00	.0000E+00	.0000E+00	.0000E+00
	.7715E+00	.7715E+00	.6205E+00	.6205E+00
59	.0000E+00	.0000E+00	.0000E+00	.0000E+00
	.7715E+00	.7715E+00	.6205E+00	.6205E+00
60	.0000E+00	.0000E+00	.0000E+00	.0000E+00
	.7715E+00	.7715E+00	.6205E+00	.6205E+00
61	.0000E+00	.0000E+00	.0000E+00	.0000E+00
	.7715E+00	.7715E+00	.6205E+00	.6205E+00
62	.0000E+00	.0000E+00	.0000E+00	.0000E+00
	.7715E+00	.7715E+00	.6205E+00	.6205E+00
63	.0000E+00	.0000E+00	.0000E+00	.0000E+00
	.7715E+00	.7715E+00	.6205E+00	.6205E+00
64	.0000E+00	.0000E+00	.0000E+00	.0000E+00
	.7715E+00	.7715E+00	.6205E+00	.6205E+00
65	.0000E+00	.0000E+00	.0000E+00	.0000E+00
	.7715E+00	.7715E+00	.6205E+00	.6205E+00
66	.0000E+00	.0000E+00	.0000E+00	.0000E+00
	.7715E+00	.7715E+00	.6205E+00	.6205E+00

========== I M A G E S 3 D ==========
= Copyright (c) 1984 Celestial Software Inc. =
==========

SOLVE DISPLACEMENTS Version 2.0 07/01/90

L O A D C A S E 1

LATERAL EARTH PRESSURE

Plate/Temp Plate/Pressure Plate/Lat. load	Node1 Node1 Side	Node2 Node2 Dir.	Node3 Node3 Node1	Node4 Node4 Node2
67	.0000E+00	.0000E+00	.0000E+00	.0000E+00
	.6205E+00	.6205E+00	.4696E+00	.4696E+00
68	.0000E+00	.0000E+00	.0000E+00	.0000E+00
	.6205E+00	.6205E+00	.4696E+00	.4696E+00
69	.0000E+00	.0000E+00	.0000E+00	.0000E+00
	.6205E+00	.6205E+00	.4696E+00	.4696E+00
70	.0000E+00	.0000E+00	.0000E+00	.0000E+00
	.6205E+00	.6205E+00	.4696E+00	.4696E+00
71	.0000E+00	.0000E+00	.0000E+00	.0000E+00
	.6205E+00	.6205E+00	.4696E+00	.4696E+00
72	.0000E+00	.0000E+00	.0000E+00	.0000E+00
	.6205E+00	.6205E+00	.4696E+00	.4696E+00
73	.0000E+00	.0000E+00	.0000E+00	.0000E+00
	.6205E+00	.6205E+00	.4696E+00	.4696E+00
74	.0000E+00	.0000E+00	.0000E+00	.0000E+00
	.6205E+00	.6205E+00	.4696E+00	.4696E+00
75	.0000E+00	.0000E+00	.0000E+00	.0000E+00
	.6205E+00	.6205E+00	.4696E+00	.4696E+00
76	.0000E+00	.0000E+00	.0000E+00	.0000E+00
	.6205E+00	.6205E+00	.4696E+00	.4696E+00
77	.0000E+00	.0000E+00	.0000E+00	.0000E+00
	.6205E+00	.6205E+00	.4696E+00	.4696E+00
78	.0000E+00	.0000E+00	.0000E+00	.0000E+00
	.4696E+00	.4696E+00	.3354E+00	.3354E+00
79	.0000E+00	.0000E+00	.0000E+00	.0000E+00
	.4696E+00	.4696E+00	.3354E+00	.3354E+00
80	.0000E+00	.0000E+00	.0000E+00	.0000E+00
	.4696E+00	.4696E+00	.3354E+00	.3354E+00
81	.0000E+00	.0000E+00	.0000E+00	.0000E+00
	.4696E+00	.4696E+00	.3354E+00	.3354E+00
82	.0000E+00	.0000E+00	.0000E+00	.0000E+00
	.4696E+00	.4696E+00	.3354E+00	.3354E+00
83	.0000E+00	.0000E+00	.0000E+00	.0000E+00
	.4696E+00	.4696E+00	.3354E+00	.3354E+00
84	.0000E+00	.0000E+00	.0000E+00	.0000E+00
	.4696E+00	.4696E+00	.3354E+00	.3354E+00
85	.0000E+00	.0000E+00	.0000E+00	.0000E+00
	.4696E+00	.4696E+00	.3354E+00	.3354E+00
86	.0000E+00	.0000E+00	.0000E+00	.0000E+00
	.4696E+00	.4696E+00	.3354E+00	.3354E+00

========== I M A G E S 3 D ==========
= Copyright (c) 1984 Celestial Software Inc. =
==========

SOLVE DISPLACEMENTS Version 2.0 07/01/90

L O A D C A S E 1

LATERAL EARTH PRESSURE

Plate/Temp Plate/Pressure Plate/Lat. load	Node1 Node1 Side	Node2 Node2 Dir.	Node3 Node3 Node1	Node4 Node4 Node2
87	.0000E+00	.0000E+00	.0000E+00	.0000E+00
	.4696E+00	.4696E+00	.3354E+00	.3354E+00
88	.0000E+00	.0000E+00	.0000E+00	.0000E+00
	.4696E+00	.4696E+00	.3354E+00	.3354E+00
89	.0000E+00	.0000E+00	.0000E+00	.0000E+00
	.3354E+00	.3354E+00	.2013E+00	.2013E+00
90	.0000E+00	.0000E+00	.0000E+00	.0000E+00
	.3354E+00	.3354E+00	.2013E+00	.2013E+00
91	.0000E+00	.0000E+00	.0000E+00	.0000E+00
	.3354E+00	.3354E+00	.2013E+00	.2013E+00
92	.0000E+00	.0000E+00	.0000E+00	.0000E+00
	.3354E+00	.3354E+00	.2013E+00	.2013E+00
93	.0000E+00	.0000E+00	.0000E+00	.0000E+00
	.3354E+00	.3354E+00	.2013E+00	.2013E+00
94	.0000E+00	.0000E+00	.0000E+00	.0000E+00
	.3354E+00	.3354E+00	.2013E+00	.2013E+00
95	.0000E+00	.0000E+00	.0000E+00	.0000E+00
	.3354E+00	.3354E+00	.2013E+00	.2013E+00
96	.0000E+00	.0000E+00	.0000E+00	.0000E+00
	.3354E+00	.3354E+00	.2013E+00	.2013E+00
97	.0000E+00	.0000E+00	.0000E+00	.0000E+00
	.3354E+00	.3354E+00	.2013E+00	.2013E+00
98	.0000E+00	.0000E+00	.0000E+00	.0000E+00
	.3354E+00	.3354E+00	.2013E+00	.2013E+00
99	.0000E+00	.0000E+00	.0000E+00	.0000E+00
	.3354E+00	.3354E+00	.2013E+00	.2013E+00
100	.0000E+00	.0000E+00	.0000E+00	.0000E+00
	.2013E+00	.2013E+00	.1006E+00	.1006E+00
101	.0000E+00	.0000E+00	.0000E+00	.0000E+00
	.2013E+00	.2013E+00	.1006E+00	.1006E+00
102	.0000E+00	.0000E+00	.0000E+00	.0000E+00
	.2013E+00	.2013E+00	.1006E+00	.1006E+00
103	.0000E+00	.0000E+00	.0000E+00	.0000E+00
	.2013E+00	.2013E+00	.1006E+00	.1006E+00
104	.0000E+00	.0000E+00	.0000E+00	.0000E+00
	.2013E+00	.2013E+00	.1006E+00	.1006E+00
105	.0000E+00	.0000E+00	.0000E+00	.0000E+00
	.2013E+00	.2013E+00	.1006E+00	.1006E+00
106	.0000E+00	.0000E+00	.0000E+00	.0000E+00
	.2013E+00	.2013E+00	.1006E+00	.1006E+00

========== I M A G E S 3 D ==========
= Copyright (c) 1984 Celestial Software Inc. =
==========

SOLVE DISPLACEMENTS Version 2.0 07/01/90

L O A D C A S E 1

LATERAL EARTH PRESSURE

Plate/Temp Plate/Pressure Plate/Lat. load	Node1 Node1 Side	Node2 Node2 Dir.	Node3 Node3 Node1	Node4 Node4 Node2
107	.0000E+00	.0000E+00	.0000E+00	.0000E+00
	.2013E+00	.2013E+00	.1006E+00	.1006E+00
108	.0000E+00	.0000E+00	.0000E+00	.0000E+00
	.2013E+00	.2013E+00	.1006E+00	.1006E+00
109	.0000E+00	.0000E+00	.0000E+00	.0000E+00
	.2013E+00	.2013E+00	.1006E+00	.1006E+00
110	.0000E+00	.0000E+00	.0000E+00	.0000E+00
	.2013E+00	.2013E+00	.1006E+00	.1006E+00
111	.0000E+00	.0000E+00	.0000E+00	.0000E+00
	.1006E+00	.1006E+00	.1110E-15	.1110E-15
112	.0000E+00	.0000E+00	.0000E+00	.0000E+00
	.1006E+00	.1006E+00	.1110E-15	.1110E-15
113	.0000E+00	.0000E+00	.0000E+00	.0000E+00
	.1006E+00	.1006E+00	.1110E-15	.1110E-15
114	.0000E+00	.0000E+00	.0000E+00	.0000E+00
	.1006E+00	.1006E+00	.1110E-15	.1110E-15
115	.0000E+00	.0000E+00	.0000E+00	.0000E+00
	.1006E+00	.1006E+00	.1110E-15	.1110E-15
116	.0000E+00	.0000E+00	.0000E+00	.0000E+00
	.1006E+00	.1006E+00	.1110E-15	.1110E-15
117	.0000E+00	.0000E+00	.0000E+00	.0000E+00
	.1006E+00	.1006E+00	.1110E-15	.1110E-15
118	.0000E+00	.0000E+00	.0000E+00	.0000E+00
	.1006E+00	.1006E+00	.1110E-15	.1110E-15
119	.0000E+00	.0000E+00	.0000E+00	.0000E+00
	.1006E+00	.1006E+00	.1110E-15	.1110E-15
120	.0000E+00	.0000E+00	.0000E+00	.0000E+00
	.1006E+00	.1006E+00	.1110E-15	.1110E-15
121	.0000E+00	.0000E+00	.0000E+00	.0000E+00
	.1006E+00	.1006E+00	.1110E-15	.1110E-15

========== I M A G E S 3 D ==========
= Copyright (c) 1984 Celestial Software Inc. =
==========

SOLVE DISPLACEMENTS Version 2.0 07/01/90

L O A D C A S E 2

OVERBURDEN PRESSURE

GRAVITY LOADING

Direction	Gravity Factor	Load Factor
X	.0000E+00	.1000E+01
Y	.0000E+00	.1000E+01
Z	.0000E+00	.1000E+01

INERTIA LOADING

Direction	Translational Accel.	Rotational Accel.	Rotational Velocity	Origin
X	.0000E+00	.0000E+00	.0000E+00	.0000E+00
Y	.0000E+00	.0000E+00	.0000E+00	.0000E+00
Z	.0000E+00	.0000E+00	.0000E+00	.0000E+00

Gravity Acceleration = .3864E+03

REFERENCE TEMPERATURE = .0000E+00

PLATE TEMPERATURES/PRESSURES

Plate/Temp Plate/Pressure Plate/Lat. load	Node1 Node1 Side	Node2 Node2 Dir.	Node3 Node3 Node1	Node4 Node4 Node2
1	.0000E+00	.0000E+00	.0000E+00	.0000E+00
	.1389E+01	.1389E+01	.1389E+01	.1389E+01
2	.0000E+00	.0000E+00	.0000E+00	.0000E+00
	.1389E+01	.1389E+01	.1389E+01	.1389E+01
3	.0000E+00	.0000E+00	.0000E+00	.0000E+00
	.1389E+01	.1389E+01	.1389E+01	.1389E+01
4	.0000E+00	.0000E+00	.0000E+00	.0000E+00
	.1389E+01	.1389E+01	.1389E+01	.1389E+01
5	.0000E+00	.0000E+00	.0000E+00	.0000E+00
	.1389E+01	.1389E+01	.1389E+01	.1389E+01
6	.0000E+00	.0000E+00	.0000E+00	.0000E+00
	.1389E+01	.1389E+01	.1389E+01	.1389E+01

```
============== I M A G E S  3 D ===============
= Copyright (c) 1984   Celestial Software Inc. =
================================================
```

SOLVE DISPLACEMENTS Version 2.0 07/01/90

L O A D C A S E 2

OVERBURDEN PRESSURE

Plate/Temp Plate/Pressure Plate/Lat. load	Node1 Node1 Side	Node2 Node2 Dir.	Node3 Node3 Node1	Node4 Node4 Node2
7	.0000E+00	.0000E+00	.0000E+00	.0000E+00
	.1389E+01	.1389E+01	.1389E+01	.1389E+01
8	.0000E+00	.0000E+00	.0000E+00	.0000E+00
	.1389E+01	.1389E+01	.1389E+01	.1389E+01
9	.0000E+00	.0000E+00	.0000E+00	.0000E+00
	.1389E+01	.1389E+01	.1389E+01	.1389E+01
10	.0000E+00	.0000E+00	.0000E+00	.0000E+00
	.1389E+01	.1389E+01	.1389E+01	.1389E+01
11	.0000E+00	.0000E+00	.0000E+00	.0000E+00
	.1389E+01	.1389E+01	.1389E+01	.1389E+01
12	.0000E+00	.0000E+00	.0000E+00	.0000E+00
	.1389E+01	.1389E+01	.1389E+01	.1389E+01
13	.0000E+00	.0000E+00	.0000E+00	.0000E+00
	.1389E+01	.1389E+01	.1389E+01	.1389E+01
14	.0000E+00	.0000E+00	.0000E+00	.0000E+00
	.1389E+01	.1389E+01	.1389E+01	.1389E+01
15	.0000E+00	.0000E+00	.0000E+00	.0000E+00
	.1389E+01	.1389E+01	.1389E+01	.1389E+01
16	.0000E+00	.0000E+00	.0000E+00	.0000E+00
	.1389E+01	.1389E+01	.1389E+01	.1389E+01
17	.0000E+00	.0000E+00	.0000E+00	.0000E+00
	.1389E+01	.1389E+01	.1389E+01	.1389E+01
18	.0000E+00	.0000E+00	.0000E+00	.0000E+00
	.1389E+01	.1389E+01	.1389E+01	.1389E+01
19	.0000E+00	.0000E+00	.0000E+00	.0000E+00
	.1389E+01	.1389E+01	.1389E+01	.1389E+01
20	.0000E+00	.0000E+00	.0000E+00	.0000E+00
	.1389E+01	.1389E+01	.1389E+01	.1389E+01
21	.0000E+00	.0000E+00	.0000E+00	.0000E+00
	.1389E+01	.1389E+01	.1389E+01	.1389E+01
22	.0000E+00	.0000E+00	.0000E+00	.0000E+00
	.1389E+01	.1389E+01	.1389E+01	.1389E+01
23	.0000E+00	.0000E+00	.0000E+00	.0000E+00
	.1389E+01	.1389E+01	.1389E+01	.1389E+01
24	.0000E+00	.0000E+00	.0000E+00	.0000E+00
	.1389E+01	.1389E+01	.1389E+01	.1389E+01
25	.0000E+00	.0000E+00	.0000E+00	.0000E+00
	.1389E+01	.1389E+01	.1389E+01	.1389E+01
26	.0000E+00	.0000E+00	.0000E+00	.0000E+00
	.1389E+01	.1389E+01	.1389E+01	.1389E+01

========== I M A G E S 3 D ==========
= Copyright (c) 1984 Celestial Software Inc. =
==========

SOLVE DISPLACEMENTS Version 2.0 07/01/90

L O A D C A S E 2

OVERBURDEN PRESSURE

Plate/Temp Plate/Pressure Plate/Lat. load	Node1 Node1 Side	Node2 Node2 Dir.	Node3 Node3 Node1	Node4 Node4 Node2
27	.0000E+00	.0000E+00	.0000E+00	.0000E+00
	.1389E+01	.1389E+01	.1389E+01	.1389E+01
28	.0000E+00	.0000E+00	.0000E+00	.0000E+00
	.1389E+01	.1389E+01	.1389E+01	.1389E+01
29	.0000E+00	.0000E+00	.0000E+00	.0000E+00
	.1389E+01	.1389E+01	.1389E+01	.1389E+01
30	.0000E+00	.0000E+00	.0000E+00	.0000E+00
	.1389E+01	.1389E+01	.1389E+01	.1389E+01
31	.0000E+00	.0000E+00	.0000E+00	.0000E+00
	.1389E+01	.1389E+01	.1389E+01	.1389E+01
32	.0000E+00	.0000E+00	.0000E+00	.0000E+00
	.1389E+01	.1389E+01	.1389E+01	.1389E+01
33	.0000E+00	.0000E+00	.0000E+00	.0000E+00
	.1389E+01	.1389E+01	.1389E+01	.1389E+01
34	.0000E+00	.0000E+00	.0000E+00	.0000E+00
	.1389E+01	.1389E+01	.1389E+01	.1389E+01
35	.0000E+00	.0000E+00	.0000E+00	.0000E+00
	.1389E+01	.1389E+01	.1389E+01	.1389E+01
36	.0000E+00	.0000E+00	.0000E+00	.0000E+00
	.1389E+01	.1389E+01	.1389E+01	.1389E+01
37	.0000E+00	.0000E+00	.0000E+00	.0000E+00
	.1389E+01	.1389E+01	.1389E+01	.1389E+01
38	.0000E+00	.0000E+00	.0000E+00	.0000E+00
	.1389E+01	.1389E+01	.1389E+01	.1389E+01
39	.0000E+00	.0000E+00	.0000E+00	.0000E+00
	.1389E+01	.1389E+01	.1389E+01	.1389E+01
40	.0000E+00	.0000E+00	.0000E+00	.0000E+00
	.1389E+01	.1389E+01	.1389E+01	.1389E+01
41	.0000E+00	.0000E+00	.0000E+00	.0000E+00
	.1389E+01	.1389E+01	.1389E+01	.1389E+01
42	.0000E+00	.0000E+00	.0000E+00	.0000E+00
	.1389E+01	.1389E+01	.1389E+01	.1389E+01
43	.0000E+00	.0000E+00	.0000E+00	.0000E+00
	.1389E+01	.1389E+01	.1389E+01	.1389E+01
44	.0000E+00	.0000E+00	.0000E+00	.0000E+00
	.1389E+01	.1389E+01	.1389E+01	.1389E+01
45	.0000E+00	.0000E+00	.0000E+00	.0000E+00
	.1389E+01	.1389E+01	.1389E+01	.1389E+01
46	.0000E+00	.0000E+00	.0000E+00	.0000E+00
	.1389E+01	.1389E+01	.1389E+01	.1389E+01

========== I M A G E S 3 D ==========
= Copyright (c) 1984 Celestial Software Inc. =
==========

SOLVE DISPLACEMENTS Version 2.0 07/01/90

L O A D C A S E 2

OVERBURDEN PRESSURE

Plate/Temp Plate/Pressure Plate/Lat. load	Node1 Node1 Side	Node2 Node2 Dir.	Node3 Node3 Node1	Node4 Node4 Node2
47	.0000E+00	.0000E+00	.0000E+00	.0000E+00
	.1389E+01	.1389E+01	.1389E+01	.1389E+01
48	.0000E+00	.0000E+00	.0000E+00	.0000E+00
	.1389E+01	.1389E+01	.1389E+01	.1389E+01
49	.0000E+00	.0000E+00	.0000E+00	.0000E+00
	.1389E+01	.1389E+01	.1389E+01	.1389E+01
50	.0000E+00	.0000E+00	.0000E+00	.0000E+00
	.1389E+01	.1389E+01	.1389E+01	.1389E+01
51	.0000E+00	.0000E+00	.0000E+00	.0000E+00
	.1389E+01	.1389E+01	.1389E+01	.1389E+01
52	.0000E+00	.0000E+00	.0000E+00	.0000E+00
	.1389E+01	.1389E+01	.1389E+01	.1389E+01
53	.0000E+00	.0000E+00	.0000E+00	.0000E+00
	.1389E+01	.1389E+01	.1389E+01	.1389E+01
54	.0000E+00	.0000E+00	.0000E+00	.0000E+00
	.1389E+01	.1389E+01	.1389E+01	.1389E+01
55	.0000E+00	.0000E+00	.0000E+00	.0000E+00
	.1389E+01	.1389E+01	.1389E+01	.1389E+01
56	.0000E+00	.0000E+00	.0000E+00	.0000E+00
	.1389E+01	.1389E+01	.1389E+01	.1389E+01
57	.0000E+00	.0000E+00	.0000E+00	.0000E+00
	.1389E+01	.1389E+01	.1389E+01	.1389E+01
58	.0000E+00	.0000E+00	.0000E+00	.0000E+00
	.1389E+01	.1389E+01	.1389E+01	.1389E+01
59	.0000E+00	.0000E+00	.0000E+00	.0000E+00
	.1389E+01	.1389E+01	.1389E+01	.1389E+01
60	.0000E+00	.0000E+00	.0000E+00	.0000E+00
	.1389E+01	.1389E+01	.1389E+01	.1389E+01
61	.0000E+00	.0000E+00	.0000E+00	.0000E+00
	.1389E+01	.1389E+01	.1389E+01	.1389E+01
62	.0000E+00	.0000E+00	.0000E+00	.0000E+00
	.1389E+01	.1389E+01	.1389E+01	.1389E+01
63	.0000E+00	.0000E+00	.0000E+00	.0000E+00
	.1389E+01	.1389E+01	.1389E+01	.1389E+01
64	.0000E+00	.0000E+00	.0000E+00	.0000E+00
	.1389E+01	.1389E+01	.1389E+01	.1389E+01
65	.0000E+00	.0000E+00	.0000E+00	.0000E+00
	.1389E+01	.1389E+01	.1389E+01	.1389E+01
66	.0000E+00	.0000E+00	.0000E+00	.0000E+00
	.1389E+01	.1389E+01	.1389E+01	.1389E+01

========== I M A G E S 3 D ==========
= Copyright (c) 1984 Celestial Software Inc. =
==========

SOLVE DISPLACEMENTS Version 2.0 07/01/90

L O A D C A S E 2

OVERBURDEN PRESSURE

Plate/Temp Plate/Pressure Plate/Lat. load	Node1 Node1 Side	Node2 Node2 Dir.	Node3 Node3 Node1	Node4 Node4 Node2
67	.0000E+00	.0000E+00	.0000E+00	.0000E+00
	.1389E+01	.1389E+01	.1389E+01	.1389E+01
68	.0000E+00	.0000E+00	.0000E+00	.0000E+00
	.1389E+01	.1389E+01	.1389E+01	.1389E+01
69	.0000E+00	.0000E+00	.0000E+00	.0000E+00
	.1389E+01	.1389E+01	.1389E+01	.1389E+01
70	.0000E+00	.0000E+00	.0000E+00	.0000E+00
	.1389E+01	.1389E+01	.1389E+01	.1389E+01
71	.0000E+00	.0000E+00	.0000E+00	.0000E+00
	.1389E+01	.1389E+01	.1389E+01	.1389E+01
72	.0000E+00	.0000E+00	.0000E+00	.0000E+00
	.1389E+01	.1389E+01	.1389E+01	.1389E+01
73	.0000E+00	.0000E+00	.0000E+00	.0000E+00
	.1389E+01	.1389E+01	.1389E+01	.1389E+01
74	.0000E+00	.0000E+00	.0000E+00	.0000E+00
	.1389E+01	.1389E+01	.1389E+01	.1389E+01
75	.0000E+00	.0000E+00	.0000E+00	.0000E+00
	.1389E+01	.1389E+01	.1389E+01	.1389E+01
76	.0000E+00	.0000E+00	.0000E+00	.0000E+00
	.1389E+01	.1389E+01	.1389E+01	.1389E+01
77	.0000E+00	.0000E+00	.0000E+00	.0000E+00
	.1389E+01	.1389E+01	.1389E+01	.1389E+01
78	.0000E+00	.0000E+00	.0000E+00	.0000E+00
	.1389E+01	.1389E+01	.1389E+01	.1389E+01
79	.0000E+00	.0000E+00	.0000E+00	.0000E+00
	.1389E+01	.1389E+01	.1389E+01	.1389E+01
80	.0000E+00	.0000E+00	.0000E+00	.0000E+00
	.1389E+01	.1389E+01	.1389E+01	.1389E+01
81	.0000E+00	.0000E+00	.0000E+00	.0000E+00
	.1389E+01	.1389E+01	.1389E+01	.1389E+01
82	.0000E+00	.0000E+00	.0000E+00	.0000E+00
	.1389E+01	.1389E+01	.1389E+01	.1389E+01
83	.0000E+00	.0000E+00	.0000E+00	.0000E+00
	.1389E+01	.1389E+01	.1389E+01	.1389E+01
84	.0000E+00	.0000E+00	.0000E+00	.0000E+00
	.1389E+01	.1389E+01	.1389E+01	.1389E+01
85	.0000E+00	.0000E+00	.0000E+00	.0000E+00
	.1389E+01	.1389E+01	.1389E+01	.1389E+01
86	.0000E+00	.0000E+00	.0000E+00	.0000E+00
	.1389E+01	.1389E+01	.1389E+01	.1389E+01

========== I M A G E S 3 D ==========
= Copyright (c) 1984 Celestial Software Inc. =
==========

SOLVE DISPLACEMENTS Version 2.0 07/01/90

L O A D C A S E 2

OVERBURDEN PRESSURE

Plate/Temp Plate/Pressure Plate/Lat. load	Node1 Node1 Side	Node2 Node2 Dir.	Node3 Node3 Node1	Node4 Node4 Node2
87	.0000E+00	.0000E+00	.0000E+00	.0000E+00
	.1389E+01	.1389E+01	.1389E+01	.1389E+01
88	.0000E+00	.0000E+00	.0000E+00	.0000E+00
	.1389E+01	.1389E+01	.1389E+01	.1389E+01
89	.0000E+00	.0000E+00	.0000E+00	.0000E+00
	.1389E+01	.1389E+01	.1389E+01	.1389E+01
90	.0000E+00	.0000E+00	.0000E+00	.0000E+00
	.1389E+01	.1389E+01	.1389E+01	.1389E+01
91	.0000E+00	.0000E+00	.0000E+00	.0000E+00
	.1389E+01	.1389E+01	.1389E+01	.1389E+01
92	.0000E+00	.0000E+00	.0000E+00	.0000E+00
	.1389E+01	.1389E+01	.1389E+01	.1389E+01
93	.0000E+00	.0000E+00	.0000E+00	.0000E+00
	.1389E+01	.1389E+01	.1389E+01	.1389E+01
94	.0000E+00	.0000E+00	.0000E+00	.0000E+00
	.1389E+01	.1389E+01	.1389E+01	.1389E+01
95	.0000E+00	.0000E+00	.0000E+00	.0000E+00
	.1389E+01	.1389E+01	.1389E+01	.1389E+01
96	.0000E+00	.0000E+00	.0000E+00	.0000E+00
	.1389E+01	.1389E+01	.1389E+01	.1389E+01
97	.0000E+00	.0000E+00	.0000E+00	.0000E+00
	.1389E+01	.1389E+01	.1389E+01	.1389E+01
98	.0000E+00	.0000E+00	.0000E+00	.0000E+00
	.1389E+01	.1389E+01	.1389E+01	.1389E+01
99	.0000E+00	.0000E+00	.0000E+00	.0000E+00
	.1389E+01	.1389E+01	.1389E+01	.1389E+01
100	.0000E+00	.0000E+00	.0000E+00	.0000E+00
	.1389E+01	.1389E+01	.1389E+01	.1389E+01
101	.0000E+00	.0000E+00	.0000E+00	.0000E+00
	.1389E+01	.1389E+01	.1389E+01	.1389E+01
102	.0000E+00	.0000E+00	.0000E+00	.0000E+00
	.1389E+01	.1389E+01	.1389E+01	.1389E+01
103	.0000E+00	.0000E+00	.0000E+00	.0000E+00
	.1389E+01	.1389E+01	.1389E+01	.1389E+01
104	.0000E+00	.0000E+00	.0000E+00	.0000E+00
	.1389E+01	.1389E+01	.1389E+01	.1389E+01
105	.0000E+00	.0000E+00	.0000E+00	.0000E+00
	.1389E+01	.1389E+01	.1389E+01	.1389E+01
106	.0000E+00	.0000E+00	.0000E+00	.0000E+00
	.1389E+01	.1389E+01	.1389E+01	.1389E+01

========== I M A G E S 3 D ==========
= Copyright (c) 1984 Celestial Software Inc. =
==========

SOLVE DISPLACEMENTS Version 2.0 07/01/90

L O A D C A S E 2

OVERBURDEN PRESSURE

Plate/Temp Plate/Pressure Plate/Lat. load	Node1 Node1 Side	Node2 Node2 Dir.	Node3 Node3 Node1	Node4 Node4 Node2
107	.0000E+00	.0000E+00	.0000E+00	.0000E+00
	.1389E+01	.1389E+01	.1389E+01	.1389E+01
108	.0000E+00	.0000E+00	.0000E+00	.0000E+00
	.1389E+01	.1389E+01	.1389E+01	.1389E+01
109	.0000E+00	.0000E+00	.0000E+00	.0000E+00
	.1389E+01	.1389E+01	.1389E+01	.1389E+01
110	.0000E+00	.0000E+00	.0000E+00	.0000E+00
	.1389E+01	.1389E+01	.1389E+01	.1389E+01
111	.0000E+00	.0000E+00	.0000E+00	.0000E+00
	.1389E+01	.1389E+01	.1389E+01	.1389E+01
112	.0000E+00	.0000E+00	.0000E+00	.0000E+00
	.1389E+01	.1389E+01	.1389E+01	.1389E+01
113	.0000E+00	.0000E+00	.0000E+00	.0000E+00
	.1389E+01	.1389E+01	.1389E+01	.1389E+01
114	.0000E+00	.0000E+00	.0000E+00	.0000E+00
	.1389E+01	.1389E+01	.1389E+01	.1389E+01
115	.0000E+00	.0000E+00	.0000E+00	.0000E+00
	.1389E+01	.1389E+01	.1389E+01	.1389E+01
116	.0000E+00	.0000E+00	.0000E+00	.0000E+00
	.1389E+01	.1389E+01	.1389E+01	.1389E+01
117	.0000E+00	.0000E+00	.0000E+00	.0000E+00
	.1389E+01	.1389E+01	.1389E+01	.1389E+01
118	.0000E+00	.0000E+00	.0000E+00	.0000E+00
	.1389E+01	.1389E+01	.1389E+01	.1389E+01
119	.0000E+00	.0000E+00	.0000E+00	.0000E+00
	.1389E+01	.1389E+01	.1389E+01	.1389E+01
120	.0000E+00	.0000E+00	.0000E+00	.0000E+00
	.1389E+01	.1389E+01	.1389E+01	.1389E+01
121	.0000E+00	.0000E+00	.0000E+00	.0000E+00
	.1389E+01	.1389E+01	.1389E+01	.1389E+01

========== I M A G E S 3 D ==========
= Copyright (c) 1984 Celestial Software Inc. =
==========

SOLVE DISPLACEMENTS Version 2.0 07/01/90

L O A D C A S E 3
OPERATING PIPE AND JUMPER LOADS

GRAVITY LOADING

Direction	Gravity Factor	Load Factor
X	.0000E+00	.1000E+01
Y	.0000E+00	.1000E+01
Z	.0000E+00	.1000E+01

INERTIA LOADING

Direction	Translational Accel.	Rotational Accel.	Rotational Velocity	Origin
X	.0000E+00	.0000E+00	.0000E+00	.0000E+00
Y	.0000E+00	.0000E+00	.0000E+00	.0000E+00
Z	.0000E+00	.0000E+00	.0000E+00	.0000E+00

Gravity Acceleration = .3864E+03

CONCENTRATED LOADS

Node	Fx	Fy	Fz	Mx	My	Mz
94	.7650E+03	.9290E+03	.3849E+04	.7440E+04	.2963E+05	.4680E+04

REFERENCE TEMPERATURE = .0000E+00

========== I M A G E S 3 D ==========
= Copyright (c) 1984 Celestial Software Inc. =
==========

SOLVE DISPLACEMENTS Version 2.0 07/01/90

L O A D C A S E 4

COVER BLOCK DEAD LOAD

GRAVITY LOADING

Direction	Gravity Factor	Load Factor
X	.0000E+00	.1000E+01
Y	.0000E+00	.1000E+01
Z	.0000E+00	.1000E+01

INERTIA LOADING

Direction	Translational Accel.	Rotational Accel.	Rotational Velocity	Origin
X	.0000E+00	.0000E+00	.0000E+00	.0000E+00
Y	.0000E+00	.0000E+00	.0000E+00	.0000E+00
Z	.0000E+00	.0000E+00	.0000E+00	.0000E+00

Gravity Acceleration = .3864E+03

CONCENTRATED LOADS

Node	Fx	Fy	Fz	Mx	My	Mz
109	.0000E+00	.2660E+04	.0000E+00	.0000E+00	.0000E+00	.0000E+00
115	.0000E+00	.4620E+04	.0000E+00	.0000E+00	.0000E+00	.0000E+00
120	.0000E+00	.1960E+04	.0000E+00	.0000E+00	.0000E+00	.0000E+00

REFERENCE TEMPERATURE = .0000E+00

========== I M A G E S 3 D ==========
= Copyright (c) 1984 Celestial Software Inc. =
==========

SOLVE DISPLACEMENTS Version 2.0 07/01/90

L O A D C A S E 1

LATERAL EARTH PRESSURE

APPLIED LOAD VECTOR

Node	Fx	Fy	Fz	Mx	My	Mz
1	.0000E+00	.0000E+00	.4662E+02	.0000E+00	.0000E+00	.0000E+00
2	.0000E+00	.0000E+00	.8548E+02	.0000E+00	.0000E+00	.0000E+00
3	.0000E+00	.0000E+00	.7770E+02	.0000E+00	.0000E+00	.0000E+00
4	.0000E+00	.0000E+00	.7770E+02	.0000E+00	.0000E+00	.0000E+00
5	.0000E+00	.0000E+00	.7770E+02	.0000E+00	.0000E+00	.0000E+00
6	.0000E+00	.0000E+00	.7770E+02	.0000E+00	.0000E+00	.0000E+00
7	.0000E+00	.0000E+00	.7382E+02	.0000E+00	.0000E+00	.0000E+00
8	.0000E+00	.0000E+00	.6993E+02	.0000E+00	.0000E+00	.0000E+00
9	.0000E+00	.0000E+00	.6605E+02	.0000E+00	.0000E+00	.0000E+00
10	.0000E+00	.0000E+00	.5828E+02	.0000E+00	.0000E+00	.0000E+00
11	.0000E+00	.0000E+00	.5439E+02	.0000E+00	.0000E+00	.0000E+00
12	.0000E+00	.0000E+00	.2720E+02	.0000E+00	.0000E+00	.0000E+00
13	.0000E+00	.0000E+00	.8654E+02	.0000E+00	.0000E+00	.0000E+00
14	.0000E+00	.0000E+00	.1587E+03	.0000E+00	.0000E+00	.0000E+00
15	.0000E+00	.0000E+00	.1442E+03	.0000E+00	.0000E+00	.0000E+00
16	.0000E+00	.0000E+00	.1442E+03	.0000E+00	.0000E+00	.0000E+00
17	.0000E+00	.0000E+00	.1442E+03	.0000E+00	.0000E+00	.0000E+00
18	.0000E+00	.0000E+00	.1442E+03	.0000E+00	.0000E+00	.0000E+00
19	.0000E+00	.0000E+00	.1370E+03	.0000E+00	.0000E+00	.0000E+00
20	.0000E+00	.0000E+00	.1298E+03	.0000E+00	.0000E+00	.0000E+00
21	.0000E+00	.0000E+00	.1226E+03	.0000E+00	.0000E+00	.0000E+00
22	.0000E+00	.0000E+00	.1082E+03	.0000E+00	.0000E+00	.0000E+00
23	.0000E+00	.0000E+00	.1010E+03	.0000E+00	.0000E+00	.0000E+00
24	.0000E+00	.0000E+00	.5048E+02	.0000E+00	.0000E+00	.0000E+00
25	.0000E+00	.0000E+00	.7647E+02	.0000E+00	.0000E+00	.0000E+00
26	.0000E+00	.0000E+00	.1402E+03	.0000E+00	.0000E+00	.0000E+00
27	.0000E+00	.0000E+00	.1275E+03	.0000E+00	.0000E+00	.0000E+00
28	.0000E+00	.0000E+00	.1275E+03	.0000E+00	.0000E+00	.0000E+00
29	.0000E+00	.0000E+00	.1275E+03	.0000E+00	.0000E+00	.0000E+00
30	.0000E+00	.0000E+00	.1275E+03	.0000E+00	.0000E+00	.0000E+00
31	.0000E+00	.0000E+00	.1211E+03	.0000E+00	.0000E+00	.0000E+00
32	.0000E+00	.0000E+00	.1147E+03	.0000E+00	.0000E+00	.0000E+00
33	.0000E+00	.0000E+00	.1083E+03	.0000E+00	.0000E+00	.0000E+00
34	.0000E+00	.0000E+00	.9559E+02	.0000E+00	.0000E+00	.0000E+00
35	.0000E+00	.0000E+00	.8922E+02	.0000E+00	.0000E+00	.0000E+00

========== I M A G E S 3 D ==========
= Copyright (c) 1984 Celestial Software Inc. =
==========

SOLVE DISPLACEMENTS Version 2.0 07/01/90

L O A D C A S E 1
LATERAL EARTH PRESSURE

APPLIED LOAD VECTOR

Node	Fx	Fy	Fz	Mx	My	Mz
36	.0000E+00	.0000E+00	.4461E+02	.0000E+00	.0000E+00	.0000E+00
37	.0000E+00	.0000E+00	.6641E+02	.0000E+00	.0000E+00	.0000E+00
38	.0000E+00	.0000E+00	.1218E+03	.0000E+00	.0000E+00	.0000E+00
39	.0000E+00	.0000E+00	.1107E+03	.0000E+00	.0000E+00	.0000E+00
40	.0000E+00	.0000E+00	.1107E+03	.0000E+00	.0000E+00	.0000E+00
41	.0000E+00	.0000E+00	.1107E+03	.0000E+00	.0000E+00	.0000E+00
42	.0000E+00	.0000E+00	.1107E+03	.0000E+00	.0000E+00	.0000E+00
43	.0000E+00	.0000E+00	.1052E+03	.0000E+00	.0000E+00	.0000E+00
44	.0000E+00	.0000E+00	.9962E+02	.0000E+00	.0000E+00	.0000E+00
45	.0000E+00	.0000E+00	.9408E+02	.0000E+00	.0000E+00	.0000E+00
46	.0000E+00	.0000E+00	.8302E+02	.0000E+00	.0000E+00	.0000E+00
47	.0000E+00	.0000E+00	.7748E+02	.0000E+00	.0000E+00	.0000E+00
48	.0000E+00	.0000E+00	.3874E+02	.0000E+00	.0000E+00	.0000E+00
49	.0000E+00	.0000E+00	.5635E+02	.0000E+00	.0000E+00	.0000E+00
50	.0000E+00	.0000E+00	.1033E+03	.0000E+00	.0000E+00	.0000E+00
51	.0000E+00	.0000E+00	.9392E+02	.0000E+00	.0000E+00	.0000E+00
52	.0000E+00	.0000E+00	.9392E+02	.0000E+00	.0000E+00	.0000E+00
53	.0000E+00	.0000E+00	.9392E+02	.0000E+00	.0000E+00	.0000E+00
54	.0000E+00	.0000E+00	.9392E+02	.0000E+00	.0000E+00	.0000E+00
55	.0000E+00	.0000E+00	.8922E+02	.0000E+00	.0000E+00	.0000E+00
56	.0000E+00	.0000E+00	.8453E+02	.0000E+00	.0000E+00	.0000E+00
57	.0000E+00	.0000E+00	.7983E+02	.0000E+00	.0000E+00	.0000E+00
58	.0000E+00	.0000E+00	.7044E+02	.0000E+00	.0000E+00	.0000E+00
59	.0000E+00	.0000E+00	.6574E+02	.0000E+00	.0000E+00	.0000E+00
60	.0000E+00	.0000E+00	.3287E+02	.0000E+00	.0000E+00	.0000E+00
61	.0000E+00	.0000E+00	.4429E+02	.0000E+00	.0000E+00	.0000E+00
62	.0000E+00	.0000E+00	.8120E+02	.0000E+00	.0000E+00	.0000E+00
63	.0000E+00	.0000E+00	.7382E+02	.0000E+00	.0000E+00	.0000E+00
64	.0000E+00	.0000E+00	.7382E+02	.0000E+00	.0000E+00	.0000E+00
65	.0000E+00	.0000E+00	.7382E+02	.0000E+00	.0000E+00	.0000E+00
66	.0000E+00	.0000E+00	.7382E+02	.0000E+00	.0000E+00	.0000E+00
67	.0000E+00	.0000E+00	.7013E+02	.0000E+00	.0000E+00	.0000E+00
68	.0000E+00	.0000E+00	.6644E+02	.0000E+00	.0000E+00	.0000E+00
69	.0000E+00	.0000E+00	.6275E+02	.0000E+00	.0000E+00	.0000E+00
70	.0000E+00	.0000E+00	.5536E+02	.0000E+00	.0000E+00	.0000E+00
71	.0000E+00	.0000E+00	.5167E+02	.0000E+00	.0000E+00	.0000E+00
72	.0000E+00	.0000E+00	.2584E+02	.0000E+00	.0000E+00	.0000E+00
73	.0000E+00	.0000E+00	.3351E+02	.0000E+00	.0000E+00	.0000E+00
74	.0000E+00	.0000E+00	.6143E+02	.0000E+00	.0000E+00	.0000E+00
75	.0000E+00	.0000E+00	.5585E+02	.0000E+00	.0000E+00	.0000E+00

========== I M A G E S 3 D ==========
= Copyright (c) 1984 Celestial Software Inc. =
==========

SOLVE DISPLACEMENTS Version 2.0 07/01/90

L O A D C A S E 1
LATERAL EARTH PRESSURE

APPLIED LOAD VECTOR

Node	Fx	Fy	Fz	Mx	My	Mz
76	.0000E+00	.0000E+00	.5585E+02	.0000E+00	.0000E+00	.0000E+00
77	.0000E+00	.0000E+00	.5585E+02	.0000E+00	.0000E+00	.0000E+00
78	.0000E+00	.0000E+00	.5585E+02	.0000E+00	.0000E+00	.0000E+00
79	.0000E+00	.0000E+00	.5305E+02	.0000E+00	.0000E+00	.0000E+00
80	.0000E+00	.0000E+00	.5026E+02	.0000E+00	.0000E+00	.0000E+00
81	.0000E+00	.0000E+00	.4747E+02	.0000E+00	.0000E+00	.0000E+00
82	.0000E+00	.0000E+00	.4189E+02	.0000E+00	.0000E+00	.0000E+00
83	.0000E+00	.0000E+00	.3909E+02	.0000E+00	.0000E+00	.0000E+00
84	.0000E+00	.0000E+00	.1955E+02	.0000E+00	.0000E+00	.0000E+00
85	.0000E+00	.0000E+00	.2423E+02	.0000E+00	.0000E+00	.0000E+00
86	.0000E+00	.0000E+00	.4443E+02	.0000E+00	.0000E+00	.0000E+00
87	.0000E+00	.0000E+00	.4039E+02	.0000E+00	.0000E+00	.0000E+00
88	.0000E+00	.0000E+00	.4039E+02	.0000E+00	.0000E+00	.0000E+00
89	.0000E+00	.0000E+00	.4039E+02	.0000E+00	.0000E+00	.0000E+00
90	.0000E+00	.0000E+00	.4039E+02	.0000E+00	.0000E+00	.0000E+00
91	.0000E+00	.0000E+00	.3837E+02	.0000E+00	.0000E+00	.0000E+00
92	.0000E+00	.0000E+00	.3635E+02	.0000E+00	.0000E+00	.0000E+00
93	.0000E+00	.0000E+00	.3433E+02	.0000E+00	.0000E+00	.0000E+00
94	.0000E+00	.0000E+00	.3029E+02	.0000E+00	.0000E+00	.0000E+00
95	.0000E+00	.0000E+00	.2827E+02	.0000E+00	.0000E+00	.0000E+00
96	.0000E+00	.0000E+00	.1414E+02	.0000E+00	.0000E+00	.0000E+00
97	.0000E+00	.0000E+00	.1610E+02	.0000E+00	.0000E+00	.0000E+00
98	.0000E+00	.0000E+00	.2952E+02	.0000E+00	.0000E+00	.0000E+00
99	.0000E+00	.0000E+00	.2683E+02	.0000E+00	.0000E+00	.0000E+00
100	.0000E+00	.0000E+00	.2683E+02	.0000E+00	.0000E+00	.0000E+00
101	.0000E+00	.0000E+00	.2683E+02	.0000E+00	.0000E+00	.0000E+00
102	.0000E+00	.0000E+00	.2683E+02	.0000E+00	.0000E+00	.0000E+00
103	.0000E+00	.0000E+00	.2549E+02	.0000E+00	.0000E+00	.0000E+00
104	.0000E+00	.0000E+00	.2415E+02	.0000E+00	.0000E+00	.0000E+00
105	.0000E+00	.0000E+00	.2281E+02	.0000E+00	.0000E+00	.0000E+00
106	.0000E+00	.0000E+00	.2013E+02	.0000E+00	.0000E+00	.0000E+00
107	.0000E+00	.0000E+00	.1878E+02	.0000E+00	.0000E+00	.0000E+00
108	.0000E+00	.0000E+00	.9392E+01	.0000E+00	.0000E+00	.0000E+00
109	.0000E+00	.0000E+00	.9035E+01	.0000E+00	.0000E+00	.0000E+00
110	.0000E+00	.0000E+00	.1647E+02	.0000E+00	.0000E+00	.0000E+00
111	.0000E+00	.0000E+00	.1487E+02	.0000E+00	.0000E+00	.0000E+00
112	.0000E+00	.0000E+00	.1487E+02	.0000E+00	.0000E+00	.0000E+00
113	.0000E+00	.0000E+00	.1487E+02	.0000E+00	.0000E+00	.0000E+00
114	.0000E+00	.0000E+00	.1487E+02	.0000E+00	.0000E+00	.0000E+00
115	.0000E+00	.0000E+00	.1413E+02	.0000E+00	.0000E+00	.0000E+00

========== I M A G E S 3 D ==========
= Copyright (c) 1984 Celestial Software Inc. =
==========

SOLVE DISPLACEMENTS Version 2.0 07/01/90

L O A D C A S E 1

LATERAL EARTH PRESSURE

APPLIED LOAD VECTOR

Node	Fx	Fy	Fz	Mx	My	Mz
116	.0000E+00	.0000E+00	.1338E+02	.0000E+00	.0000E+00	.0000E+00
117	.0000E+00	.0000E+00	.1264E+02	.0000E+00	.0000E+00	.0000E+00
118	.0000E+00	.0000E+00	.1115E+02	.0000E+00	.0000E+00	.0000E+00
119	.0000E+00	.0000E+00	.1052E+02	.0000E+00	.0000E+00	.0000E+00
120	.0000E+00	.0000E+00	.5318E+01	.0000E+00	.0000E+00	.0000E+00
121	.0000E+00	.0000E+00	.4000E+01	.0000E+00	.0000E+00	.0000E+00
122	.0000E+00	.0000E+00	.7019E+01	.0000E+00	.0000E+00	.0000E+00
123	.0000E+00	.0000E+00	.6038E+01	.0000E+00	.0000E+00	.0000E+00
124	.0000E+00	.0000E+00	.6038E+01	.0000E+00	.0000E+00	.0000E+00
125	.0000E+00	.0000E+00	.6038E+01	.0000E+00	.0000E+00	.0000E+00
126	.0000E+00	.0000E+00	.6038E+01	.0000E+00	.0000E+00	.0000E+00
127	.0000E+00	.0000E+00	.5736E+01	.0000E+00	.0000E+00	.0000E+00
128	.0000E+00	.0000E+00	.5434E+01	.0000E+00	.0000E+00	.0000E+00
129	.0000E+00	.0000E+00	.5132E+01	.0000E+00	.0000E+00	.0000E+00
130	.0000E+00	.0000E+00	.4528E+01	.0000E+00	.0000E+00	.0000E+00
131	.0000E+00	.0000E+00	.4604E+01	.0000E+00	.0000E+00	.0000E+00
132	.0000E+00	.0000E+00	.2490E+01	.0000E+00	.0000E+00	.0000E+00
133	.0000E+00	.0000E+00	.7170E+00	.0000E+00	.0000E+00	.0000E+00
134	.0000E+00	.0000E+00	.1220E+01	.0000E+00	.0000E+00	.0000E+00
135	.0000E+00	.0000E+00	.1006E+01	.0000E+00	.0000E+00	.0000E+00
136	.0000E+00	.0000E+00	.1006E+01	.0000E+00	.0000E+00	.0000E+00
137	.0000E+00	.0000E+00	.1006E+01	.0000E+00	.0000E+00	.0000E+00
138	.0000E+00	.0000E+00	.1006E+01	.0000E+00	.0000E+00	.0000E+00
139	.0000E+00	.0000E+00	.9559E+00	.0000E+00	.0000E+00	.0000E+00
140	.0000E+00	.0000E+00	.9056E+00	.0000E+00	.0000E+00	.0000E+00
141	.0000E+00	.0000E+00	.8553E+00	.0000E+00	.0000E+00	.0000E+00
142	.0000E+00	.0000E+00	.7547E+00	.0000E+00	.0000E+00	.0000E+00
143	.0000E+00	.0000E+00	.8176E+00	.0000E+00	.0000E+00	.0000E+00
144	.0000E+00	.0000E+00	.4654E+00	.0000E+00	.0000E+00	.0000E+00

```
=============== I M A G E S  3 D ===============
= Copyright (c) 1984   Celestial Software Inc. =
================================================
```

SOLVE DISPLACEMENTS Version 2.0 07/01/90

L O A D C A S E 2

OVERBURDEN PRESSURE

APPLIED LOAD VECTOR

Node	Fx	Fy	Fz	Mx	My	Mz
1	.0000E+00	.0000E+00	.4167E+02	.0000E+00	.0000E+00	.0000E+00
2	.0000E+00	.0000E+00	.7640E+02	.0000E+00	.0000E+00	.0000E+00
3	.0000E+00	.0000E+00	.6945E+02	.0000E+00	.0000E+00	.0000E+00
4	.0000E+00	.0000E+00	.6945E+02	.0000E+00	.0000E+00	.0000E+00
5	.0000E+00	.0000E+00	.6945E+02	.0000E+00	.0000E+00	.0000E+00
6	.0000E+00	.0000E+00	.6945E+02	.0000E+00	.0000E+00	.0000E+00
7	.0000E+00	.0000E+00	.6598E+02	.0000E+00	.0000E+00	.0000E+00
8	.0000E+00	.0000E+00	.6251E+02	.0000E+00	.0000E+00	.0000E+00
9	.0000E+00	.0000E+00	.5903E+02	.0000E+00	.0000E+00	.0000E+00
10	.0000E+00	.0000E+00	.5209E+02	.0000E+00	.0000E+00	.0000E+00
11	.0000E+00	.0000E+00	.4862E+02	.0000E+00	.0000E+00	.0000E+00
12	.0000E+00	.0000E+00	.2431E+02	.0000E+00	.0000E+00	.0000E+00
13	.0000E+00	.0000E+00	.8334E+02	.0000E+00	.0000E+00	.0000E+00
14	.0000E+00	.0000E+00	.1528E+03	.0000E+00	.0000E+00	.0000E+00
15	.0000E+00	.0000E+00	.1389E+03	.0000E+00	.0000E+00	.0000E+00
16	.0000E+00	.0000E+00	.1389E+03	.0000E+00	.0000E+00	.0000E+00
17	.0000E+00	.0000E+00	.1389E+03	.0000E+00	.0000E+00	.0000E+00
18	.0000E+00	.0000E+00	.1389E+03	.0000E+00	.0000E+00	.0000E+00
19	.0000E+00	.0000E+00	.1320E+03	.0000E+00	.0000E+00	.0000E+00
20	.0000E+00	.0000E+00	.1250E+03	.0000E+00	.0000E+00	.0000E+00
21	.0000E+00	.0000E+00	.1181E+03	.0000E+00	.0000E+00	.0000E+00
22	.0000E+00	.0000E+00	.1042E+03	.0000E+00	.0000E+00	.0000E+00
23	.0000E+00	.0000E+00	.9723E+02	.0000E+00	.0000E+00	.0000E+00
24	.0000E+00	.0000E+00	.4862E+02	.0000E+00	.0000E+00	.0000E+00
25	.0000E+00	.0000E+00	.8334E+02	.0000E+00	.0000E+00	.0000E+00
26	.0000E+00	.0000E+00	.1528E+03	.0000E+00	.0000E+00	.0000E+00
27	.0000E+00	.0000E+00	.1389E+03	.0000E+00	.0000E+00	.0000E+00
28	.0000E+00	.0000E+00	.1389E+03	.0000E+00	.0000E+00	.0000E+00
29	.0000E+00	.0000E+00	.1389E+03	.0000E+00	.0000E+00	.0000E+00
30	.0000E+00	.0000E+00	.1389E+03	.0000E+00	.0000E+00	.0000E+00
31	.0000E+00	.0000E+00	.1320E+03	.0000E+00	.0000E+00	.0000E+00
32	.0000E+00	.0000E+00	.1250E+03	.0000E+00	.0000E+00	.0000E+00
33	.0000E+00	.0000E+00	.1181E+03	.0000E+00	.0000E+00	.0000E+00
34	.0000E+00	.0000E+00	.1042E+03	.0000E+00	.0000E+00	.0000E+00
35	.0000E+00	.0000E+00	.9723E+02	.0000E+00	.0000E+00	.0000E+00

========== I M A G E S 3 D ==========
= Copyright (c) 1984 Celestial Software Inc. =
==========

SOLVE DISPLACEMENTS Version 2.0 07/01/90

L O A D C A S E 2

OVERBURDEN PRESSURE

APPLIED LOAD VECTOR

Node	Fx	Fy	Fz	Mx	My	Mz
36	.0000E+00	.0000E+00	.4862E+02	.0000E+00	.0000E+00	.0000E+00
37	.0000E+00	.0000E+00	.8334E+02	.0000E+00	.0000E+00	.0000E+00
38	.0000E+00	.0000E+00	.1528E+03	.0000E+00	.0000E+00	.0000E+00
39	.0000E+00	.0000E+00	.1389E+03	.0000E+00	.0000E+00	.0000E+00
40	.0000E+00	.0000E+00	.1389E+03	.0000E+00	.0000E+00	.0000E+00
41	.0000E+00	.0000E+00	.1389E+03	.0000E+00	.0000E+00	.0000E+00
42	.0000E+00	.0000E+00	.1389E+03	.0000E+00	.0000E+00	.0000E+00
43	.0000E+00	.0000E+00	.1320E+03	.0000E+00	.0000E+00	.0000E+00
44	.0000E+00	.0000E+00	.1250E+03	.0000E+00	.0000E+00	.0000E+00
45	.0000E+00	.0000E+00	.1181E+03	.0000E+00	.0000E+00	.0000E+00
46	.0000E+00	.0000E+00	.1042E+03	.0000E+00	.0000E+00	.0000E+00
47	.0000E+00	.0000E+00	.9723E+02	.0000E+00	.0000E+00	.0000E+00
48	.0000E+00	.0000E+00	.4862E+02	.0000E+00	.0000E+00	.0000E+00
49	.0000E+00	.0000E+00	.8334E+02	.0000E+00	.0000E+00	.0000E+00
50	.0000E+00	.0000E+00	.1528E+03	.0000E+00	.0000E+00	.0000E+00
51	.0000E+00	.0000E+00	.1389E+03	.0000E+00	.0000E+00	.0000E+00
52	.0000E+00	.0000E+00	.1389E+03	.0000E+00	.0000E+00	.0000E+00
53	.0000E+00	.0000E+00	.1389E+03	.0000E+00	.0000E+00	.0000E+00
54	.0000E+00	.0000E+00	.1389E+03	.0000E+00	.0000E+00	.0000E+00
55	.0000E+00	.0000E+00	.1320E+03	.0000E+00	.0000E+00	.0000E+00
56	.0000E+00	.0000E+00	.1250E+03	.0000E+00	.0000E+00	.0000E+00
57	.0000E+00	.0000E+00	.1181E+03	.0000E+00	.0000E+00	.0000E+00
58	.0000E+00	.0000E+00	.1042E+03	.0000E+00	.0000E+00	.0000E+00
59	.0000E+00	.0000E+00	.9723E+02	.0000E+00	.0000E+00	.0000E+00
60	.0000E+00	.0000E+00	.4862E+02	.0000E+00	.0000E+00	.0000E+00
61	.0000E+00	.0000E+00	.7917E+02	.0000E+00	.0000E+00	.0000E+00
62	.0000E+00	.0000E+00	.1452E+03	.0000E+00	.0000E+00	.0000E+00
63	.0000E+00	.0000E+00	.1320E+03	.0000E+00	.0000E+00	.0000E+00
64	.0000E+00	.0000E+00	.1320E+03	.0000E+00	.0000E+00	.0000E+00
65	.0000E+00	.0000E+00	.1320E+03	.0000E+00	.0000E+00	.0000E+00
66	.0000E+00	.0000E+00	.1320E+03	.0000E+00	.0000E+00	.0000E+00
67	.0000E+00	.0000E+00	.1254E+03	.0000E+00	.0000E+00	.0000E+00
68	.0000E+00	.0000E+00	.1188E+03	.0000E+00	.0000E+00	.0000E+00
69	.0000E+00	.0000E+00	.1122E+03	.0000E+00	.0000E+00	.0000E+00
70	.0000E+00	.0000E+00	.9897E+02	.0000E+00	.0000E+00	.0000E+00
71	.0000E+00	.0000E+00	.9237E+02	.0000E+00	.0000E+00	.0000E+00
72	.0000E+00	.0000E+00	.4618E+02	.0000E+00	.0000E+00	.0000E+00
73	.0000E+00	.0000E+00	.7501E+02	.0000E+00	.0000E+00	.0000E+00
74	.0000E+00	.0000E+00	.1375E+03	.0000E+00	.0000E+00	.0000E+00
75	.0000E+00	.0000E+00	.1250E+03	.0000E+00	.0000E+00	.0000E+00

========== I M A G E S 3 D ==========
= Copyright (c) 1984 Celestial Software Inc. =
==========

SOLVE DISPLACEMENTS Version 2.0 07/01/90

L O A D C A S E 2

OVERBURDEN PRESSURE

APPLIED LOAD VECTOR

Node	Fx	Fy	Fz	Mx	My	Mz
76	.0000E+00	.0000E+00	.1250E+03	.0000E+00	.0000E+00	.0000E+00
77	.0000E+00	.0000E+00	.1250E+03	.0000E+00	.0000E+00	.0000E+00
78	.0000E+00	.0000E+00	.1250E+03	.0000E+00	.0000E+00	.0000E+00
79	.0000E+00	.0000E+00	.1188E+03	.0000E+00	.0000E+00	.0000E+00
80	.0000E+00	.0000E+00	.1125E+03	.0000E+00	.0000E+00	.0000E+00
81	.0000E+00	.0000E+00	.1063E+03	.0000E+00	.0000E+00	.0000E+00
82	.0000E+00	.0000E+00	.9376E+02	.0000E+00	.0000E+00	.0000E+00
83	.0000E+00	.0000E+00	.8751E+02	.0000E+00	.0000E+00	.0000E+00
84	.0000E+00	.0000E+00	.4375E+02	.0000E+00	.0000E+00	.0000E+00
85	.0000E+00	.0000E+00	.7084E+02	.0000E+00	.0000E+00	.0000E+00
86	.0000E+00	.0000E+00	.1299E+03	.0000E+00	.0000E+00	.0000E+00
87	.0000E+00	.0000E+00	.1181E+03	.0000E+00	.0000E+00	.0000E+00
88	.0000E+00	.0000E+00	.1181E+03	.0000E+00	.0000E+00	.0000E+00
89	.0000E+00	.0000E+00	.1181E+03	.0000E+00	.0000E+00	.0000E+00
90	.0000E+00	.0000E+00	.1181E+03	.0000E+00	.0000E+00	.0000E+00
91	.0000E+00	.0000E+00	.1122E+03	.0000E+00	.0000E+00	.0000E+00
92	.0000E+00	.0000E+00	.1063E+03	.0000E+00	.0000E+00	.0000E+00
93	.0000E+00	.0000E+00	.1004E+03	.0000E+00	.0000E+00	.0000E+00
94	.0000E+00	.0000E+00	.8855E+02	.0000E+00	.0000E+00	.0000E+00
95	.0000E+00	.0000E+00	.8265E+02	.0000E+00	.0000E+00	.0000E+00
96	.0000E+00	.0000E+00	.4132E+02	.0000E+00	.0000E+00	.0000E+00
97	.0000E+00	.0000E+00	.6667E+02	.0000E+00	.0000E+00	.0000E+00
98	.0000E+00	.0000E+00	.1222E+03	.0000E+00	.0000E+00	.0000E+00
99	.0000E+00	.0000E+00	.1111E+03	.0000E+00	.0000E+00	.0000E+00
100	.0000E+00	.0000E+00	.1111E+03	.0000E+00	.0000E+00	.0000E+00
101	.0000E+00	.0000E+00	.1111E+03	.0000E+00	.0000E+00	.0000E+00
102	.0000E+00	.0000E+00	.1111E+03	.0000E+00	.0000E+00	.0000E+00
103	.0000E+00	.0000E+00	.1056E+03	.0000E+00	.0000E+00	.0000E+00
104	.0000E+00	.0000E+00	.1000E+03	.0000E+00	.0000E+00	.0000E+00
105	.0000E+00	.0000E+00	.9445E+02	.0000E+00	.0000E+00	.0000E+00
106	.0000E+00	.0000E+00	.8334E+02	.0000E+00	.0000E+00	.0000E+00
107	.0000E+00	.0000E+00	.7778E+02	.0000E+00	.0000E+00	.0000E+00
108	.0000E+00	.0000E+00	.3889E+02	.0000E+00	.0000E+00	.0000E+00
109	.0000E+00	.0000E+00	.5938E+02	.0000E+00	.0000E+00	.0000E+00
110	.0000E+00	.0000E+00	.1080E+03	.0000E+00	.0000E+00	.0000E+00
111	.0000E+00	.0000E+00	.9723E+02	.0000E+00	.0000E+00	.0000E+00
112	.0000E+00	.0000E+00	.9723E+02	.0000E+00	.0000E+00	.0000E+00
113	.0000E+00	.0000E+00	.9723E+02	.0000E+00	.0000E+00	.0000E+00
114	.0000E+00	.0000E+00	.9723E+02	.0000E+00	.0000E+00	.0000E+00
115	.0000E+00	.0000E+00	.9237E+02	.0000E+00	.0000E+00	.0000E+00

========== I M A G E S 3 D ==========
= Copyright (c) 1984 Celestial Software Inc. =
==========

SOLVE DISPLACEMENTS Version 2.0 07/01/90

L O A D C A S E 2

OVERBURDEN PRESSURE

APPLIED LOAD VECTOR

Node	Fx	Fy	Fz	Mx	My	Mz
116	.0000E+00	.0000E+00	.8751E+02	.0000E+00	.0000E+00	.0000E+00
117	.0000E+00	.0000E+00	.8265E+02	.0000E+00	.0000E+00	.0000E+00
118	.0000E+00	.0000E+00	.7292E+02	.0000E+00	.0000E+00	.0000E+00
119	.0000E+00	.0000E+00	.6910E+02	.0000E+00	.0000E+00	.0000E+00
120	.0000E+00	.0000E+00	.3507E+02	.0000E+00	.0000E+00	.0000E+00
121	.0000E+00	.0000E+00	.5625E+02	.0000E+00	.0000E+00	.0000E+00
122	.0000E+00	.0000E+00	.9792E+02	.0000E+00	.0000E+00	.0000E+00
123	.0000E+00	.0000E+00	.8334E+02	.0000E+00	.0000E+00	.0000E+00
124	.0000E+00	.0000E+00	.8334E+02	.0000E+00	.0000E+00	.0000E+00
125	.0000E+00	.0000E+00	.8334E+02	.0000E+00	.0000E+00	.0000E+00
126	.0000E+00	.0000E+00	.8334E+02	.0000E+00	.0000E+00	.0000E+00
127	.0000E+00	.0000E+00	.7917E+02	.0000E+00	.0000E+00	.0000E+00
128	.0000E+00	.0000E+00	.7501E+02	.0000E+00	.0000E+00	.0000E+00
129	.0000E+00	.0000E+00	.7084E+02	.0000E+00	.0000E+00	.0000E+00
130	.0000E+00	.0000E+00	.6251E+02	.0000E+00	.0000E+00	.0000E+00
131	.0000E+00	.0000E+00	.6459E+02	.0000E+00	.0000E+00	.0000E+00
132	.0000E+00	.0000E+00	.3542E+02	.0000E+00	.0000E+00	.0000E+00
133	.0000E+00	.0000E+00	.3021E+02	.0000E+00	.0000E+00	.0000E+00
134	.0000E+00	.0000E+00	.5105E+02	.0000E+00	.0000E+00	.0000E+00
135	.0000E+00	.0000E+00	.4167E+02	.0000E+00	.0000E+00	.0000E+00
136	.0000E+00	.0000E+00	.4167E+02	.0000E+00	.0000E+00	.0000E+00
137	.0000E+00	.0000E+00	.4167E+02	.0000E+00	.0000E+00	.0000E+00
138	.0000E+00	.0000E+00	.4167E+02	.0000E+00	.0000E+00	.0000E+00
139	.0000E+00	.0000E+00	.3959E+02	.0000E+00	.0000E+00	.0000E+00
140	.0000E+00	.0000E+00	.3750E+02	.0000E+00	.0000E+00	.0000E+00
141	.0000E+00	.0000E+00	.3542E+02	.0000E+00	.0000E+00	.0000E+00
142	.0000E+00	.0000E+00	.3125E+02	.0000E+00	.0000E+00	.0000E+00
143	.0000E+00	.0000E+00	.3438E+02	.0000E+00	.0000E+00	.0000E+00
144	.0000E+00	.0000E+00	.1979E+02	.0000E+00	.0000E+00	.0000E+00

```
============== I M A G E S  3 D ==============
= Copyright (c) 1984   Celestial Software Inc. =
===============================================
```

SOLVE DISPLACEMENTS Version 2.0 07/01/90

L O A D C A S E 3

OPERATING PIPE AND JUMPER LOADS

APPLIED LOAD VECTOR

Node	Fx	Fy	Fz	Mx	My	Mz
94	.7650E+03	.9290E+03	.3849E+04	.7440E+04	.2963E+05	.4680E+04

========== I M A G E S 3 D ==========
= Copyright (c) 1984 Celestial Software Inc. =
==========

SOLVE DISPLACEMENTS Version 2.0 07/01/90

L O A D C A S E 4

COVER BLOCK DEAD LOAD

APPLIED LOAD VECTOR

Node	Fx	Fy	Fz	Mx	My	Mz
109	.0000E+00	.2660E+04	.0000E+00	.0000E+00	.0000E+00	.0000E+00
115	.0000E+00	.4620E+04	.0000E+00	.0000E+00	.0000E+00	.0000E+00
120	.0000E+00	.1960E+04	.0000E+00	.0000E+00	.0000E+00	.0000E+00

========== I M A G E S 3 D ==========
= Copyright (c) 1984 Celestial Software Inc. =
==========
COMBINE RESULTS Version 2.0 07/01/90

Combined Plate Stresses

Load Combination Method
1.4*F[1,4]+1.7*(F[1,1]+F[1,2])+1.7*F[1,3]

Plate		Sigma-X	Sigma-Y	Tau-XY	Tau-XZ	Tau-YZ
1	T	-9.550E+00	-1.099E+01	-6.131E+00		
1	M	6.294E-01	8.099E-01	4.224E-01	1.069E+00	1.767E+00
1	B	1.081E+01	1.260E+01	6.976E+00		
2	T	-7.395E+00	-2.672E+01	-9.888E+00		
2	M	6.128E-01	1.809E+00	6.143E-01	-5.841E-01	7.200E+00
2	B	8.621E+00	3.034E+01	1.112E+01		
3	T	-8.774E+00	-4.268E+01	-9.520E+00		
3	M	6.364E-01	2.481E+00	6.710E-01	-1.073E+00	1.353E+01
3	B	1.005E+01	4.764E+01	1.086E+01		
4	T	-1.076E+01	-5.656E+01	-6.411E+00		
4	M	6.475E-01	3.051E+00	6.056E-01	-9.181E-01	1.783E+01
4	B	1.205E+01	6.267E+01	7.623E+00		
5	T	-1.201E+01	-6.419E+01	-2.010E+00		
5	M	6.391E-01	3.454E+00	4.303E-01	-3.501E-01	1.999E+01
5	B	1.329E+01	7.110E+01	2.870E+00		
6	T	-1.192E+01	-6.389E+01	2.823E+00		
6	M	6.151E-01	3.614E+00	1.691E-01	3.419E-01	1.985E+01
6	B	1.315E+01	7.112E+01	-2.485E+00		
7	T	-1.070E+01	-5.636E+01	7.071E+00		
7	M	5.866E-01	3.487E+00	-1.129E-01	8.668E-01	1.759E+01
7	B	1.187E+01	6.334E+01	-7.296E+00		
8	T	-9.049E+00	-4.366E+01	9.905E+00		
8	M	5.612E-01	3.070E+00	-3.542E-01	1.014E+00	1.351E+01
8	B	1.017E+01	4.980E+01	-1.061E+01		
9	T	-7.947E+00	-2.934E+01	1.060E+01		
9	M	5.507E-01	2.425E+00	-5.049E-01	6.623E-01	8.322E+00
9	B	9.048E+00	3.419E+01	-1.161E+01		
10	T	-8.222E+00	-1.762E+01	8.744E+00		
10	M	5.678E-01	1.663E+00	-5.280E-01	-1.141E-01	3.221E+00
10	B	9.357E+00	2.095E+01	-9.800E+00		
11	T	-1.065E+01	-7.969E+00	5.456E+00		
11	M	6.361E-01	7.187E-01	-4.476E-01	-1.436E+00	4.207E-01
11	B	1.192E+01	9.407E+00	-6.351E+00		
12	T	-2.266E+01	-7.353E+00	-9.759E+00		
12	M	1.240E+00	8.116E-01	6.902E-01	5.450E+00	-2.049E-01
12	B	2.514E+01	8.976E+00	1.114E+01		

========== I M A G E S 3 D ==========
= Copyright (c) 1984 Celestial Software Inc. =
==========

COMBINE RESULTS Version 2.0 07/01/90

Combined Plate Stresses

Plate		Sigma-X	Sigma-Y	Tau-XY	Tau-XZ	Tau-YZ
13	T	-4.515E+00	-6.683E+00	-1.451E+01		
13	M	9.270E-01	1.688E+00	7.114E-01	1.710E+00	2.750E+00
13	B	6.369E+00	1.006E+01	1.593E+01		
14	T	3.374E+00	-9.343E+00	-1.463E+01		
14	M	7.260E-01	2.486E+00	7.623E-01	5.160E-02	8.010E+00
14	B	-1.922E+00	1.432E+01	1.615E+01		
15	T	7.299E+00	-1.276E+01	-1.018E+01		
15	M	5.332E-01	3.171E+00	7.060E-01	-4.525E-01	1.143E+01
15	B	-6.233E+00	1.910E+01	1.159E+01		
16	T	8.946E+00	-1.511E+01	-3.508E+00		
16	M	3.561E-01	3.687E+00	5.223E-01	-2.518E-01	1.317E+01
16	B	-8.233E+00	2.248E+01	4.553E+00		
17	T	9.051E+00	-1.532E+01	4.022E+00		
17	M	2.361E-01	3.926E+00	2.254E-01	1.334E-01	1.306E+01
17	B	-8.579E+00	2.317E+01	-3.571E+00		
18	T	7.416E+00	-1.352E+01	1.069E+01		
18	M	2.102E-01	3.816E+00	-1.181E-01	2.278E-01	1.124E+01
18	B	-6.996E+00	2.115E+01	-1.092E+01		
19	T	3.262E+00	-1.060E+01	1.510E+01		
19	M	3.081E-01	3.347E+00	-4.372E-01	-3.090E-01	7.958E+00
19	B	-2.646E+00	1.730E+01	-1.597E+01		
20	T	-4.062E+00	-8.077E+00	1.605E+01		
20	M	5.134E-01	2.599E+00	-6.798E-01	-1.634E+00	3.753E+00
20	B	5.088E+00	1.327E+01	-1.741E+01		
21	T	-1.423E+01	-7.154E+00	1.305E+01		
21	M	8.102E-01	1.705E+00	-8.253E-01	-3.593E+00	-4.104E-01
21	B	1.585E+01	1.056E+01	-1.470E+01		
22	T	-2.873E+01	-8.269E+00	9.306E+00		
22	M	1.202E+00	7.958E-01	-9.479E-01	-6.365E+00	-1.177E+00
22	B	3.113E+01	9.861E+00	-1.120E+01		
23	T	-3.815E+01	-8.140E+00	-1.026E+01		
23	M	1.559E+00	8.325E-01	9.798E-01	1.126E+01	-1.217E+00
23	B	4.127E+01	9.805E+00	1.222E+01		
24	T	-5.583E+00	2.324E+00	-1.602E+01		
24	M	1.236E+00	1.641E+00	1.002E+00	6.675E+00	1.478E-02
24	B	8.054E+00	9.588E-01	1.803E+01		
25	T	1.145E+01	8.079E+00	-1.663E+01		
25	M	9.005E-01	2.479E+00	1.034E+00	3.844E+00	4.038E+00
25	B	-9.653E+00	-3.121E+00	1.870E+01		
26	T	2.116E+01	1.122E+01	-1.202E+01		
26	M	5.621E-01	3.300E+00	9.731E-01	1.958E+00	6.627E+00
26	B	-2.004E+01	-4.620E+00	1.396E+01		

========== I M A G E S 3 D ==========
= Copyright (c) 1984 Celestial Software Inc. =
==========
COMBINE RESULTS Version 2.0 07/01/90

Combined Plate Stresses

Plate		Sigma-X	Sigma-Y	Tau-XY	Tau-XZ	Tau-YZ
27	T	2.587E+01	1.231E+01	-4.572E+00		
27	M	2.538E-01	3.973E+00	7.426E-01	5.773E-01	8.010E+00
27	B	-2.536E+01	-4.367E+00	6.057E+00		
28	T	2.628E+01	1.164E+01	4.066E+00		
28	M	4.294E-02	4.337E+00	3.298E-01	-7.659E-01	8.026E+00
28	B	-2.619E+01	-2.968E+00	-3.407E+00		
29	T	2.217E+01	9.536E+00	1.192E+01		
29	M	1.413E-02	4.283E+00	-1.759E-01	-2.373E+00	6.691E+00
29	B	-2.214E+01	-9.700E-01	-1.228E+01		
30	T	1.232E+01	6.034E+00	1.720E+01		
30	M	1.736E-01	3.779E+00	-6.821E-01	-4.426E+00	4.156E+00
30	B	-1.197E+01	1.524E+00	-1.857E+01		
31	T	-3.449E+00	1.205E+00	1.835E+01		
31	M	5.227E-01	2.937E+00	-1.104E+00	-6.943E+00	8.100E-01
31	B	4.494E+00	4.668E+00	-2.055E+01		
32	T	-2.412E+01	-4.789E+00	1.481E+01		
32	M	9.394E-01	1.959E+00	-1.393E+00	-9.674E+00	-2.469E+00
32	B	2.600E+01	8.706E+00	-1.760E+01		
33	T	-5.010E+01	-1.212E+01	1.018E+01		
33	M	1.400E+00	9.381E-01	-1.562E+00	-1.276E+01	-1.978E+00
33	B	5.290E+01	1.400E+01	-1.330E+01		
34	T	-5.400E+01	-1.103E+01	-8.493E+00		
34	M	1.786E+00	8.232E-01	1.237E+00	1.540E+01	-1.602E+00
34	B	5.757E+01	1.267E+01	1.097E+01		
35	T	-9.012E+00	4.754E+00	-1.396E+01		
35	M	1.487E+00	1.566E+00	1.325E+00	1.023E+01	-1.434E+00
35	B	1.199E+01	-1.622E+00	1.661E+01		
36	T	1.634E+01	1.511E+01	-1.503E+01		
36	M	1.126E+00	2.456E+00	1.415E+00	6.608E+00	1.484E+00
36	B	-1.409E+01	-1.020E+01	1.787E+01		
37	T	3.162E+01	2.215E+01	-1.130E+01		
37	M	6.887E-01	3.449E+00	1.373E+00	3.777E+00	3.419E+00
37	B	-3.025E+01	-1.525E+01	1.404E+01		
38	T	3.940E+01	2.552E+01	-4.907E+00		
38	M	2.608E-01	4.352E+00	1.075E+00	1.340E+00	4.586E+00
38	B	-3.888E+01	-1.682E+01	7.056E+00		
39	T	4.059E+01	2.489E+01	2.691E+00		
39	M	-3.196E-02	4.935E+00	5.029E-01	-1.175E+00	4.884E+00
39	B	-4.066E+01	-1.502E+01	-1.686E+00		
40	T	3.470E+01	2.026E+01	9.849E+00		
40	M	-1.280E-01	4.987E+00	-2.554E-01	-4.160E+00	4.133E+00
40	B	-3.496E+01	-1.029E+01	-1.036E+01		

========== I M A G E S 3 D ==========
= Copyright (c) 1984 Celestial Software Inc. =
==========
COMBINE RESULTS Version 2.0 07/01/90

Combined Plate Stresses

Plate		Sigma-X	Sigma-Y	Tau-XY	Tau-XZ	Tau-YZ
41	T	2.017E+01	1.262E+01	1.541E+01		
41	M	1.048E-01	4.466E+00	-1.019E+00	-7.634E+00	2.234E+00
41	B	-1.996E+01	-3.685E+00	-1.745E+01		
42	T	-4.468E+00	3.042E+00	1.710E+01		
42	M	4.789E-01	3.491E+00	-1.668E+00	-1.137E+01	-5.662E-01
42	B	5.426E+00	3.940E+00	-2.044E+01		
43	T	-3.540E+01	-6.930E+00	1.405E+01		
43	M	1.042E+00	2.337E+00	-2.092E+00	-1.485E+01	-3.403E+00
43	B	3.749E+01	1.160E+01	-1.823E+01		
44	T	-7.386E+01	-1.790E+01	9.677E+00		
44	M	1.565E+00	1.094E+00	-2.294E+00	-1.821E+01	-2.335E+00
44	B	7.699E+01	2.008E+01	-1.427E+01		
45	T	-6.763E+01	-1.462E+01	-6.230E+00		
45	M	1.912E+00	7.580E-01	1.430E+00	1.798E+01	-1.594E+00
45	B	7.145E+01	1.613E+01	9.091E+00		
46	T	-1.350E+01	3.423E+00	-1.085E+01		
46	M	1.705E+00	1.405E+00	1.614E+00	1.268E+01	-2.001E+00
46	B	1.691E+01	-6.137E-01	1.408E+01		
47	T	1.875E+01	1.613E+01	-1.203E+01		
47	M	1.382E+00	2.346E+00	1.824E+00	8.600E+00	-9.101E-03
47	B	-1.598E+01	-1.144E+01	1.568E+01		
48	T	3.883E+01	2.552E+01	-9.281E+00		
48	M	9.102E-01	3.580E+00	1.885E+00	5.160E+00	1.387E+00
48	B	-3.701E+01	-1.836E+01	1.305E+01		
49	T	4.922E+01	3.094E+01	-4.535E+00		
49	M	3.370E-01	4.880E+00	1.546E+00	2.085E+00	2.361E+00
49	B	-4.854E+01	-2.118E+01	7.627E+00		
50	T	5.139E+01	3.139E+01	7.865E-01		
50	M	-5.617E-02	5.763E+00	7.030E-01	-9.830E-01	3.029E+00
50	B	-5.150E+01	-1.986E+01	6.195E-01		
51	T	4.564E+01	2.665E+01	6.123E+00		
51	M	-6.848E-02	6.013E+00	-2.840E-01	-4.601E+00	3.451E+00
51	B	-4.578E+01	-1.463E+01	-6.691E+00		
52	T	2.762E+01	1.554E+01	1.063E+01		
52	M	-4.112E-02	5.474E+00	-1.402E+00	-1.002E+01	2.506E+00
52	B	-2.770E+01	-4.595E+00	-1.344E+01		
53	T	-2.501E+00	2.189E+00	1.459E+01		
53	M	5.845E-01	4.315E+00	-2.347E+00	-1.559E+01	9.608E-03
53	B	3.670E+00	6.440E+00	-1.928E+01		
54	T	-4.744E+01	-1.147E+01	1.295E+01		
54	M	1.011E+00	2.819E+00	-2.902E+00	-2.054E+01	-3.158E+00
54	B	4.946E+01	1.711E+01	-1.875E+01		

========== I M A G E S 3 D ==========
= Copyright (c) 1984 Celestial Software Inc. =
==========
COMBINE RESULTS Version 2.0 07/01/90

Combined Plate Stresses

Plate		Sigma-X	Sigma-Y	Tau-XY	Tau-XZ	Tau-YZ
55	T	-9.739E+01	-2.459E+01	9.311E+00		
55	M	1.778E+00	1.327E+00	-3.212E+00	-2.404E+01	-2.456E+00
55	B	1.009E+02	2.724E+01	-1.574E+01		
56	T	-7.822E+01	-1.801E+01	-4.464E+00		
56	M	1.882E+00	6.464E-01	1.530E+00	1.944E+01	-1.421E+00
56	B	8.198E+01	1.930E+01	7.524E+00		
57	T	-1.784E+01	4.935E-01	-8.113E+00		
57	M	1.792E+00	1.153E+00	1.777E+00	1.424E+01	-2.032E+00
57	B	2.143E+01	1.812E+00	1.167E+01		
58	T	1.966E+01	1.410E+01	-9.008E+00		
58	M	1.661E+00	2.089E+00	2.140E+00	9.910E+00	-6.901E-01
58	B	-1.633E+01	-9.919E+00	1.329E+01		
59	T	4.342E+01	2.481E+01	-6.739E+00		
59	M	1.224E+00	3.575E+00	2.445E+00	6.113E+00	2.475E-01
59	B	-4.097E+01	-1.766E+01	1.163E+01		
60	T	5.572E+01	3.219E+01	-3.164E+00		
60	M	5.146E-01	5.506E+00	2.204E+00	2.725E+00	9.704E-01
60	B	-5.469E+01	-2.118E+01	7.572E+00		
61	T	5.831E+01	3.525E+01	-5.574E-02		
61	M	-1.335E-01	7.051E+00	9.646E-01	-4.359E-01	1.690E+00
61	B	-5.857E+01	-2.114E+01	1.985E+00		
62	T	5.357E+01	3.251E+01	2.186E+00		
62	M	2.079E-02	7.064E+00	-7.217E-01	-3.425E+00	3.213E+00
62	B	-5.353E+01	-1.838E+01	-3.630E+00		
63	T	3.986E+01	2.619E+01	6.865E+00		
63	M	8.650E-01	6.715E+00	-1.395E+00	-8.179E+00	6.635E+00
63	B	-3.813E+01	-1.276E+01	-9.656E+00		
64	T	-3.546E+00	5.400E+00	7.035E+00		
64	M	-9.215E-02	5.512E+00	-2.900E+00	-2.230E+01	4.335E+00
64	B	3.362E+00	5.624E+00	-1.283E+01		
65	T	-4.543E+01	-1.596E+01	1.073E+01		
65	M	1.249E+00	3.536E+00	-3.974E+00	-2.710E+01	-1.933E+00
65	B	4.793E+01	2.303E+01	-1.867E+01		
66	T	-1.259E+02	-3.467E+01	1.290E+01		
66	M	1.694E+00	1.384E+00	-4.122E+00	-3.214E+01	-1.800E+00
66	B	1.293E+02	3.743E+01	-2.115E+01		
67	T	-8.654E+01	-2.088E+01	-3.477E+00		
67	M	1.608E+00	4.829E-01	1.533E+00	2.047E+01	-1.131E+00
67	B	8.976E+01	2.184E+01	6.543E+00		
68	T	-2.149E+01	-2.502E+00	-6.235E+00		
68	M	1.655E+00	9.002E-01	1.816E+00	1.522E+01	-1.659E+00
68	B	2.480E+01	4.302E+00	9.867E+00		

========== I M A G E S 3 D ==========
= Copyright (c) 1984 Celestial Software Inc. =
==========

COMBINE RESULTS Version 2.0 07/01/90

Combined Plate Stresses

Plate		Sigma-X	Sigma-Y	Tau-XY	Tau-XZ	Tau-YZ
69	T	1.978E+01	1.093E+01	-6.785E+00		
69	M	1.696E+00	1.661E+00	2.149E+00	1.065E+01	-7.766E-01
69	B	-1.639E+01	-7.611E+00	1.108E+01		
70	T	4.674E+01	2.178E+01	-4.358E+00		
70	M	1.856E+00	3.174E+00	2.861E+00	6.648E+00	-3.052E-01
70	B	-4.303E+01	-1.544E+01	1.008E+01		
71	T	6.017E+01	3.077E+01	-6.941E-01		
71	M	8.532E-01	6.070E+00	3.255E+00	3.160E+00	7.142E-02
71	B	-5.846E+01	-1.863E+01	7.205E+00		
72	T	6.260E+01	3.716E+01	1.364E+00		
72	M	-3.242E-01	9.096E+00	1.473E+00	8.804E-02	5.303E-01
72	B	-6.325E+01	-1.897E+01	1.583E+00		
73	T	5.756E+01	3.882E+01	1.109E+00		
73	M	-7.714E-02	9.306E+00	-1.747E+00	-2.234E+00	1.359E+00
73	B	-5.771E+01	-2.021E+01	-4.603E+00		
74	T	5.148E+01	3.570E+01	3.281E+00		
74	M	1.895E+00	5.807E+00	-3.239E+00	-1.823E+00	6.617E+00
74	B	-4.769E+01	-2.409E+01	-9.759E+00		
75	T	6.770E+01	3.222E+01	2.289E+01		
75	M	4.520E+00	7.662E+00	-2.293E-01	8.526E+00	1.797E+01
75	B	-5.866E+01	-1.690E+01	-2.335E+01		
76	T	-9.763E+01	-9.564E+00	3.875E+01		
76	M	-1.812E+00	5.374E+00	-4.928E+00	-3.391E+01	8.737E+00
76	B	9.400E+01	2.031E+01	-4.860E+01		
77	T	-1.621E+02	-3.057E+01	1.145E+01		
77	M	-4.839E-01	3.811E-01	-4.397E+00	-3.546E+01	-3.577E+00
77	B	1.611E+02	3.133E+01	-2.025E+01		
78	T	-9.345E+01	-2.262E+01	-2.938E+00		
78	M	1.057E+00	3.186E-01	1.477E+00	2.166E+01	-5.570E-01
78	B	9.557E+01	2.326E+01	5.891E+00		
79	T	-2.454E+01	-4.149E+00	-5.446E+00		
79	M	1.195E+00	6.298E-01	1.713E+00	1.578E+01	-7.446E-01
79	B	2.693E+01	5.409E+00	8.872E+00		
80	T	2.000E+01	8.387E+00	-5.689E+00		
80	M	1.457E+00	1.446E+00	2.031E+00	1.087E+01	-4.182E-01
80	B	-1.708E+01	-5.495E+00	9.750E+00		
81	T	4.870E+01	1.735E+01	-3.391E+00		
81	M	1.766E+00	2.139E+00	2.350E+00	6.823E+00	-4.930E-01
81	B	-4.516E+01	-1.308E+01	8.091E+00		
82	T	6.526E+01	2.660E+01	2.153E+00		
82	M	2.799E+00	5.657E+00	4.564E+00	3.329E+00	-5.188E-01
82	B	-5.966E+01	-1.529E+01	6.976E+00		

========== I M A G E S 3 D ==========
= Copyright (c) 1984 Celestial Software Inc. =
==========
COMBINE RESULTS Version 2.0 07/01/90

Combined Plate Stresses

Plate		Sigma-X	Sigma-Y	Tau-XY	Tau-XZ	Tau-YZ
83	T	6.565E+01	3.746E+01	5.429E+00		
83	M	-8.817E-01	1.277E+01	3.562E+00	3.088E-01	-4.811E-01
83	B	-6.742E+01	-1.192E+01	1.696E+00		
84	T	6.038E+01	4.100E+01	2.256E+00		
84	M	-8.059E-01	1.295E+01	-4.390E+00	-1.849E+00	-4.560E-01
84	B	-6.200E+01	-1.509E+01	-1.104E+01		
85	T	5.768E+01	3.469E+01	3.754E+00		
85	M	3.486E+00	6.247E+00	-6.013E+00	-3.100E-01	-4.580E+00
85	B	-5.070E+01	-2.220E+01	-1.578E+01		
86	T	7.470E+01	5.100E+01	-2.140E+01		
86	M	3.751E+00	-1.454E+00	-3.650E+00	1.057E+01	-2.622E+01
86	B	-6.720E+01	-5.391E+01	1.410E+01		
87	T	-9.894E+01	9.603E+00	-2.524E+01		
87	M	-3.170E+00	-2.982E+00	-9.074E+00	-3.852E+01	-1.945E+01
87	B	9.260E+01	-1.557E+01	7.097E+00		
88	T	-1.743E+02	-3.339E+01	-8.741E+00		
88	M	-1.977E+00	8.534E-01	-5.852E+00	-4.032E+01	2.425E+00
88	B	1.703E+02	3.510E+01	-2.962E+00		
89	T	-1.007E+02	-2.191E+01	-2.806E+00		
89	M	7.813E-02	1.389E-01	1.352E+00	2.227E+01	5.558E-01
89	B	1.009E+02	2.219E+01	5.509E+00		
90	T	-2.463E+01	-2.250E+00	-6.974E+00		
90	M	5.197E-01	5.226E-01	1.458E+00	1.582E+01	7.970E-01
90	B	2.567E+01	3.295E+00	9.890E+00		
91	T	2.037E+01	6.170E+00	-5.309E+00		
91	M	8.699E-01	9.712E-01	1.762E+00	1.112E+01	1.344E-01
91	B	-1.863E+01	-4.227E+00	8.834E+00		
92	T	4.985E+01	1.441E+01	-2.707E+00		
92	M	1.160E+00	2.500E+00	2.203E+00	7.082E+00	-3.927E-01
92	B	-4.753E+01	-9.406E+00	7.112E+00		
93	T	6.683E+01	1.715E+01	8.383E-01		
93	M	1.914E+00	9.987E-01	2.331E+00	3.236E+00	-7.069E-01
93	B	-6.301E+01	-1.515E+01	3.823E+00		
94	T	7.242E+01	3.858E+01	1.303E+01		
94	M	2.945E+00	1.964E+01	9.970E+00	-4.229E-01	-9.835E-01
94	B	-6.653E+01	7.092E-01	6.913E+00		
95	T	6.787E+01	3.961E+01	-3.459E+00		
95	M	2.879E+00	1.995E+01	-1.151E+01	-3.420E+00	-2.082E+00
95	B	-6.212E+01	2.763E-01	-1.956E+01		
96	T	5.319E+01	2.298E+01	5.100E+00		
96	M	1.579E+00	9.253E-01	-3.625E+00	-7.281E+00	-6.547E+00
96	B	-5.003E+01	-2.113E+01	-1.235E+01		

========== I M A G E S 3 D ==========
= Copyright (c) 1984 Celestial Software Inc. =
==========
COMBINE RESULTS Version 2.0 07/01/90

Combined Plate Stresses

Plate		Sigma-X	Sigma-Y	Tau-XY	Tau-XZ	Tau-YZ
97	T	4.471E+00	1.099E+01	7.691E+00		
97	M	6.000E-01	9.734E-01	-3.564E+00	-2.216E+01	-7.505E+00
97	B	-3.271E+00	-9.040E+00	-1.482E+01		
98	T	-5.719E+01	-9.730E+00	9.077E-01		
98	M	5.123E-01	-8.744E-01	-4.668E+00	-3.446E+01	-2.392E+00
98	B	5.821E+01	7.981E+00	-1.024E+01		
99	T	-1.667E+02	-3.840E+01	-1.073E+01		
99	M	-2.265E+00	-9.715E-01	-6.258E+00	-4.212E+01	8.553E-02
99	B	1.621E+02	3.645E+01	-1.784E+00		
100	T	-8.241E+01	-2.422E+01	-7.835E+00		
100	M	-9.827E-01	4.839E-01	1.516E+00	1.905E+01	3.818E+00
100	B	8.044E+01	2.519E+01	1.087E+01		
101	T	-1.768E+01	-6.008E+00	-7.829E+00		
101	M	-1.962E-01	3.786E-01	1.890E+00	1.349E+01	1.954E+00
101	B	1.728E+01	6.766E+00	1.161E+01		
102	T	1.837E+01	1.279E+01	-5.375E+00		
102	M	3.943E-01	1.444E+00	2.370E+00	9.918E+00	2.989E-01
102	B	-1.758E+01	-9.898E+00	1.011E+01		
103	T	4.369E+01	2.474E+01	-1.991E+00		
103	M	8.645E-01	2.037E+00	3.301E+00	6.456E+00	-6.844E-01
103	B	-4.196E+01	-2.067E+01	8.593E+00		
104	T	5.746E+01	3.730E+01	2.507E+00		
104	M	2.645E-01	7.427E+00	3.433E+00	2.899E+00	-1.135E+00
104	B	-5.693E+01	-2.245E+01	4.359E+00		
105	T	6.201E+01	1.877E+01	1.815E+01		
105	M	3.920E-01	-1.441E+01	1.339E+01	-6.742E-01	-1.788E+00
105	B	-6.122E+01	-4.759E+01	8.621E+00		
106	T	5.751E+01	1.770E+01	-5.840E+00		
106	M	1.426E-01	-1.477E+01	-1.524E+01	-4.406E+00	-3.361E+00
106	B	-5.723E+01	-4.724E+01	-2.464E+01		
107	T	3.825E+01	2.856E+01	6.577E+00		
107	M	-4.719E-01	6.501E+00	-5.097E+00	-1.080E+01	-4.322E+00
107	B	-3.919E+01	-1.555E+01	-1.677E+01		
108	T	4.442E+00	2.900E+00	3.218E+00		
108	M	4.806E-02	7.858E-01	-5.582E+00	-1.871E+01	-2.012E+00
108	B	-4.346E+00	-1.328E+00	-1.438E+01		
109	T	-5.160E+01	-2.259E+01	1.655E+00		
109	M	-8.639E-01	3.166E-03	-5.686E+00	-2.505E+01	2.930E+00
109	B	4.987E+01	2.260E+01	-1.303E+01		
110	T	-1.268E+02	-3.665E+01	1.856E+00		
110	M	-2.180E+00	1.257E+00	-6.096E+00	-3.020E+01	6.637E+00
110	B	1.225E+02	3.916E+01	-1.405E+01		

========== I M A G E S 3 D ==========
= Copyright (c) 1984 Celestial Software Inc. =
==========
COMBINE RESULTS Version 2.0 07/01/90

Combined Plate Stresses

Plate		Sigma-X	Sigma-Y	Tau-XY	Tau-XZ	Tau-YZ
111	T	-7.824E+01	-1.870E+01	-4.101E+00		
111	M	-1.994E+00	2.381E-01	1.098E+00	1.097E+01	2.743E+00
111	B	7.425E+01	1.918E+01	6.296E+00		
112	T	-1.682E+01	-1.207E+00	1.444E-01		
112	M	-1.073E+00	2.313E-01	1.434E+00	7.700E+00	9.261E-01
112	B	1.468E+01	1.670E+00	2.724E+00		
113	T	1.791E+01	9.877E+00	-5.904E-01		
113	M	-2.318E-01	7.734E-01	2.039E+00	6.031E+00	-1.352E+00
113	B	-1.837E+01	-8.331E+00	4.669E+00		
114	T	4.438E+01	1.931E+01	7.646E-01		
114	M	5.568E-01	2.433E+00	2.718E+00	4.066E+00	-2.092E+00
114	B	-4.327E+01	-1.444E+01	4.671E+00		
115	T	5.853E+01	2.365E+01	6.575E+00		
115	M	-4.282E-01	2.194E+00	5.872E+00	1.973E+00	-2.584E+00
115	B	-5.939E+01	-1.926E+01	5.169E+00		
116	T	6.772E+01	1.583E+01	1.067E+01		
116	M	4.484E+00	-7.052E+00	6.556E+00	-2.015E-01	-3.148E+00
116	B	-5.875E+01	-2.993E+01	2.444E+00		
117	T	6.055E+01	1.226E+01	-1.306E+00		
117	M	4.309E+00	-7.637E+00	-7.381E+00	-3.006E+00	-3.777E+00
117	B	-5.193E+01	-2.753E+01	-1.346E+01		
118	T	3.413E+01	1.298E+01	-3.251E+00		
118	M	-1.152E+00	1.351E+00	-7.348E+00	-6.896E+00	-3.508E+00
118	B	-3.643E+01	-1.028E+01	-1.144E+01		
119	T	-1.738E+00	1.002E+00	-5.765E+00		
119	M	-6.884E-01	1.708E+00	-4.857E+00	-1.070E+01	-1.387E+00
119	B	3.609E-01	2.414E+00	-3.950E+00		
120	T	-4.703E+01	-1.298E+01	-8.666E+00		
120	M	-1.484E+00	-1.408E-02	-5.064E+00	-1.320E+01	3.165E+00
120	B	4.406E+01	1.296E+01	-1.461E+00		
121	T	-1.119E+02	-2.688E+01	-4.350E-01		
121	M	-3.045E+00	1.062E+00	-4.642E+00	-1.518E+01	4.970E+00
121	B	1.058E+02	2.900E+01	-8.849E+00		
122	T	-7.073E+01	-1.354E+01	-3.051E+00		
122	M	-3.250E+00	3.645E-02	6.917E-01	7.836E+00	2.344E+00
122	B	6.423E+01	1.361E+01	4.435E+00		
123	T	-2.058E+01	2.345E-01	-5.686E-01		
123	M	-2.231E+00	3.354E-02	9.124E-01	6.564E+00	4.727E-01
123	B	1.611E+01	-1.674E-01	2.393E+00		
124	T	1.580E+01	5.317E+00	-1.840E+00		
124	M	-9.830E-01	4.685E-01	1.245E+00	5.559E+00	-1.894E+00
124	B	-1.776E+01	-4.380E+00	4.331E+00		

========== I M A G E S 3 D ==========
= Copyright (c) 1984 Celestial Software Inc. =
==========
COMBINE RESULTS Version 2.0 07/01/90

Combined Plate Stresses

Plate		Sigma-X	Sigma-Y	Tau-XY	Tau-XZ	Tau-YZ
125	T	4.352E+01	9.894E+00	3.287E-01		
125	M	1.992E-01	1.175E+00	2.604E+00	3.760E+00	-2.292E+00
125	B	-4.312E+01	-7.545E+00	4.879E+00		
126	T	6.168E+01	1.168E+01	5.349E+00		
126	M	2.661E+00	5.948E-01	4.697E+00	1.762E+00	-2.764E+00
126	B	-5.635E+01	-1.049E+01	4.045E+00		
127	T	6.873E+01	8.577E+00	7.221E+00		
127	M	5.983E+00	-2.774E+00	3.219E+00	-5.009E-01	-3.071E+00
127	B	-5.676E+01	-1.412E+01	-7.823E-01		
128	T	5.965E+01	6.070E+00	2.050E+00		
128	M	5.891E+00	-3.048E+00	-3.510E+00	-3.233E+00	-3.116E+00
128	B	-4.787E+01	-1.217E+01	-9.071E+00		
129	T	3.231E+01	4.635E+00	-1.734E+00		
129	M	2.161E+00	1.090E-01	-5.546E+00	-6.336E+00	-2.547E+00
129	B	-2.799E+01	-4.417E+00	-9.358E+00		
130	T	-6.711E+00	-1.276E-01	-4.701E+00		
130	M	-9.422E-01	8.526E-01	-4.357E+00	-8.787E+00	-1.140E+00
130	B	4.827E+00	1.833E+00	-4.012E+00		
131	T	-4.819E+01	-6.229E+00	-6.346E+00		
131	M	-2.850E+00	6.529E-02	-3.790E+00	-9.463E+00	2.747E+00
131	B	4.249E+01	6.359E+00	-1.234E+00		
132	T	-9.430E+01	-1.805E+01	-6.868E-01		
132	M	-5.092E+00	4.658E-01	-3.310E+00	-9.656E+00	4.066E+00
132	B	8.412E+01	1.898E+01	-5.934E+00		
133	T	-6.422E+01	-8.347E+00	-1.253E+00		
133	M	-4.755E+00	-1.439E-01	2.985E-01	3.886E+00	1.519E+00
133	B	5.471E+01	8.059E+00	1.850E+00		
134	T	-2.493E+01	1.376E+00	-2.447E+00		
134	M	-3.508E+00	3.625E-02	2.450E-01	8.950E+00	5.167E-01
134	B	1.791E+01	-1.304E+00	2.937E+00		
135	T	1.330E+01	1.190E+00	-2.704E+00		
135	M	-2.344E+00	8.634E-02	4.430E-01	7.621E+00	-8.714E-01
135	B	-1.799E+01	-1.018E+00	3.590E+00		
136	T	4.301E+01	2.644E+00	-1.163E+00		
136	M	1.053E-01	2.336E-01	1.107E+00	5.078E+00	-9.343E-01
136	B	-4.279E+01	-2.177E+00	3.377E+00		
137	T	6.358E+01	3.119E+00	2.115E+00		
137	M	4.832E+00	1.023E-01	2.007E+00	1.826E+00	-1.230E+00
137	B	-5.392E+01	-2.914E+00	1.899E+00		
138	T	7.199E+01	2.512E+00	3.959E+00		
138	M	9.844E+00	-5.119E-01	1.292E+00	-1.923E+00	-1.291E+00
138	B	-5.230E+01	-3.536E+00	-1.374E+00		

========== I M A G E S 3 D ==========
= Copyright (c) 1984 Celestial Software Inc. =
==========

COMBINE RESULTS Version 2.0 07/01/90

Combined Plate Stresses

Plate		Sigma-X	Sigma-Y	Tau-XY	Tau-XZ	Tau-YZ
139	T	6.193E+01	1.737E+00	2.779E+00		
139	M	9.945E+00	-5.710E-01	-1.330E+00	-5.525E+00	-1.139E+00
139	B	-4.204E+01	-2.879E+00	-5.440E+00		
140	T	3.228E+01	9.936E-01	1.302E+00		
140	M	4.923E+00	-8.054E-03	-2.288E+00	-8.371E+00	-7.185E-01
140	B	-2.243E+01	-1.010E+00	-5.878E+00		
141	T	-9.305E+00	-5.943E-01	-3.330E-01		
141	M	-4.670E-01	1.568E-01	-1.820E+00	-9.965E+00	-3.499E-01
141	B	8.371E+00	9.079E-01	-3.308E+00		
142	T	-5.067E+01	-7.953E-01	-1.047E+00		
142	M	-4.379E+00	4.718E-02	-1.465E+00	-9.295E+00	1.765E+00
142	B	4.192E+01	8.896E-01	-1.883E+00		
143	T	-8.293E+01	-9.822E+00	-1.645E+00		
143	M	-8.876E+00	-1.179E-01	-1.532E+00	-2.518E+00	2.210E+00
143	B	6.518E+01	9.586E+00	-1.420E+00		

ATTACHMENT 4
CGI for Nonshrink Epoxy Grout
2 pages including this page

KAISER ENGINEERS HANFORD

Calc. No. W320-24-016
Revision 0
Page No. 2 of 2

DESIGN ANALYSIS

Client WHC
Subject Engineering Evaluation of Commercial Grade Items
Location 200E

WO/Job No. ER4319/W-320
Date 2/22/95 By JR Booth
Checked 3/10/95 By
Revised By

Commercial Grade Item (CGI): Nonshrink Epoxy Grout (ASTM C 827)

1. What would cause the part/item to fail (what are the credible failure modes)?

   a. Volume change as a result of shrinkage or excessive expansion.
   b. Compressive failure due to applied loads.
   c. Thermal expansion as a result of excessive heat.
   d. Creep as a result of excessive loading over time.

2. What characteristics does the item have which are critical to the predictability of its performance? (Critical characteristics are identifiable and/or measurable attributes of a part/item which provides assurance that the part/item will perform as predicted.)

   a. Volume change.
   b. Compressive strength.
   c. Thermal expansion.
   d. Creep Resistance.

3. What type of acceptance testing, when required, (load tests, Brinell hardness tests, nondestructive examination (NDE) tests, destructive physical tests, etc.) is required to be performed by ICF KH to provide confidence that the part/item has the necessary critical characteristics?

   a. Grout shall show no shrinkage (0.0%) and a maximum 2.0% expansion from time of placement when tested according to ASTM C 827, modified to use a ball with a specific gravity between 0.9 and 1.1.

   b. Grout shall show a minimum 7-day compressive strength of 16,000 psi when tested according to ASTM C 579.

   c. Grout shall show a maximum coefficient of thermal expansion of 30×10^{-6} in/in/°F when tested according to ASTM C 531.

   d. Grout shall show creep equal to or less than 5.0×10^{-3} in/in at 180°F for one year with a load of 400 psi when tested according to CPR Creep Test.

4. What manufacturing controls are required, if any, in addition to receipt inspection and/or acceptance testing (such as ICF KH witnessing test, ICF KH shop inspection, etc.)?

   None

5. Is part/item identifiable to a manufacturer's published product description which meet the critical characteristics?

   Product description is Nonshrink Epoxy Grout (ASTM C 827): U.S. Grout Corporation "Five Star Epoxy Grout" or approved substitute.

KAISER ENGINEERS
HANFORD

DESIGN ANALYSIS

Calc. No. W320-24-016
Revision 0
Page No. 1 of 10

Client WHC
Subject Sluice Pit AY-02E Analysis
Location 241-AY

WO/Job No. ER4319 / W-320
Date 2/22/95 By AR Barth
Checked 3/30/95 By
Revised By

VERIFICATION OF FREQUENCY (RIGID RANGE)

A unit load of 1000 lbs was applied at node 94 to determine the deflection of the wall for calculating the stiffness. The load is applied at the same location as the penetration for the sluice line. The max deflection will be used to approximate the stiffness.

$\delta = 7.107 \times 10^{-4}$ (Deflection due to concentrated 1 Kip load applied at node 94.)

$S = \frac{1}{\delta} \times 1000\,lb = 1.4 \times 10^{6}\,lb/in$ (Stiffness.)

$W = [(8' \times 7' \times 1')\,150\,lb/ft^3] = 8400\,lb$

$g = 384\,in/s^2$ (Gravity)

$f = \frac{1}{2\pi}\sqrt{\frac{S}{mass}} = \frac{1}{2\pi}\sqrt{\frac{1.4 \times 10^{6}\,lb/in}{8400\,lb/384\,in/s^2}} = 40\,Hz$

A frequency of 40 Hz is within the rigid range for acceleration of 0.2g which validates the assumption stated in the front of the calculation.

KAISER ENGINEERS HANFORD S/N:801854 03/28/95
PAGE 1 RUN ID=T177162 13:07:10

========== I M A G E S 3 D ==========
= Copyright (c) 1984 Celestial Software Inc. =
==========

CHECK GEOMETRY Version 2.0 07/01/90

MATERIAL PROPERTIES

Material No	Modulus of Elasticity	Weight Density	Coeff of Thermal Exp.	Poisson's Ratio	Shear Web Modulus
1	3.46000E+05	8.68000E-02	5.50000E-06	2.50E-01	0.00000E+00
2	4.10000E+05	8.68000E-02	5.50000E-06	2.50E-01	0.00000E+00

NODE COORDINATES

Node	X-Coord.	Y-Coord.	Z-Coord.
1	6.00000E+00	0.00000E+00	0.00000E+00
2	1.80000E+01	0.00000E+00	0.00000E+00
3	2.80000E+01	0.00000E+00	0.00000E+00
4	3.80000E+01	0.00000E+00	0.00000E+00
5	4.80000E+01	0.00000E+00	0.00000E+00
6	5.80000E+01	0.00000E+00	0.00000E+00
7	6.80000E+01	0.00000E+00	0.00000E+00
8	7.70000E+01	0.00000E+00	0.00000E+00
9	8.60000E+01	0.00000E+00	0.00000E+00
10	9.40000E+01	0.00000E+00	0.00000E+00
11	1.01000E+02	0.00000E+00	0.00000E+00
12	1.08000E+02	0.00000E+00	0.00000E+00
13	6.00000E+00	1.00000E+01	0.00000E+00
14	1.80000E+01	1.00000E+01	0.00000E+00
15	2.80000E+01	1.00000E+01	0.00000E+00
16	3.80000E+01	1.00000E+01	0.00000E+00
17	4.80000E+01	1.00000E+01	0.00000E+00
18	5.80000E+01	1.00000E+01	0.00000E+00
19	6.80000E+01	1.00000E+01	0.00000E+00
20	7.70000E+01	1.00000E+01	0.00000E+00
21	8.60000E+01	1.00000E+01	0.00000E+00
22	9.40000E+01	1.00000E+01	0.00000E+00
23	1.01000E+02	1.00000E+01	0.00000E+00
24	1.08000E+02	1.00000E+01	0.00000E+00
25	6.00000E+00	2.00000E+01	0.00000E+00
26	1.80000E+01	2.00000E+01	0.00000E+00
27	2.80000E+01	2.00000E+01	0.00000E+00
28	3.80000E+01	2.00000E+01	0.00000E+00
29	4.80000E+01	2.00000E+01	0.00000E+00

KAISER ENGINEERS HANFORD S/N:801854 03/28/95
PAGE 2 RUN ID=T177162 13:07:10

========== I M A G E S 3 D ==========
= Copyright (c) 1984 Celestial Software Inc. =
==========

CHECK GEOMETRY Version 2.0 07/01/90

Node	X-Coord.	Y-Coord.	Z-Coord.
30	5.80000E+01	2.00000E+01	0.00000E+00
31	6.80000E+01	2.00000E+01	0.00000E+00
32	7.70000E+01	2.00000E+01	0.00000E+00
33	8.60000E+01	2.00000E+01	0.00000E+00
34	9.40000E+01	2.00000E+01	0.00000E+00
35	1.01000E+02	2.00000E+01	0.00000E+00
36	1.08000E+02	2.00000E+01	0.00000E+00
37	6.00000E+00	3.00000E+01	0.00000E+00
38	1.80000E+01	3.00000E+01	0.00000E+00
39	2.80000E+01	3.00000E+01	0.00000E+00
40	3.80000E+01	3.00000E+01	0.00000E+00
41	4.80000E+01	3.00000E+01	0.00000E+00
42	5.80000E+01	3.00000E+01	0.00000E+00
43	6.80000E+01	3.00000E+01	0.00000E+00
44	7.70000E+01	3.00000E+01	0.00000E+00
45	8.60000E+01	3.00000E+01	0.00000E+00
46	9.40000E+01	3.00000E+01	0.00000E+00
47	1.01000E+02	3.00000E+01	0.00000E+00
48	1.08000E+02	3.00000E+01	0.00000E+00
49	6.00000E+00	4.00000E+01	0.00000E+00
50	1.80000E+01	4.00000E+01	0.00000E+00
51	2.80000E+01	4.00000E+01	0.00000E+00
52	3.80000E+01	4.00000E+01	0.00000E+00
53	4.80000E+01	4.00000E+01	0.00000E+00
54	5.80000E+01	4.00000E+01	0.00000E+00
55	6.80000E+01	4.00000E+01	0.00000E+00
56	7.70000E+01	4.00000E+01	0.00000E+00
57	8.60000E+01	4.00000E+01	0.00000E+00
58	9.40000E+01	4.00000E+01	0.00000E+00
59	1.01000E+02	4.00000E+01	0.00000E+00
60	1.08000E+02	4.00000E+01	0.00000E+00
61	6.00000E+00	5.00000E+01	0.00000E+00
62	1.80000E+01	5.00000E+01	0.00000E+00
63	2.80000E+01	5.00000E+01	0.00000E+00
64	3.80000E+01	5.00000E+01	0.00000E+00
65	4.80000E+01	5.00000E+01	0.00000E+00
66	5.80000E+01	5.00000E+01	0.00000E+00
67	6.80000E+01	5.00000E+01	0.00000E+00
68	7.70000E+01	5.00000E+01	0.00000E+00
69	8.60000E+01	5.00000E+01	0.00000E+00
70	9.40000E+01	5.00000E+01	0.00000E+00
71	1.01000E+02	5.00000E+01	0.00000E+00

KAISER ENGINEERS HANFORD S/N:801854 03/28/95
PAGE 3 RUN ID=TI77162 13:07:10

========== I M A G E S 3 D ==========
= Copyright (c) 1984 Celestial Software Inc. =
==========

CHECK GEOMETRY Version 2.0 07/01/90

Node	X-Coord.	Y-Coord.	Z-Coord.
72	1.08000E+02	5.00000E+01	0.00000E+00
73	6.00000E+00	5.90000E+01	0.00000E+00
74	1.80000E+01	5.90000E+01	0.00000E+00
75	2.80000E+01	5.90000E+01	0.00000E+00
76	3.80000E+01	5.90000E+01	0.00000E+00
77	4.80000E+01	5.90000E+01	0.00000E+00
78	5.80000E+01	5.90000E+01	0.00000E+00
79	6.80000E+01	5.90000E+01	0.00000E+00
80	7.70000E+01	5.90000E+01	0.00000E+00
81	8.60000E+01	5.90000E+01	0.00000E+00
82	9.40000E+01	5.90000E+01	0.00000E+00
83	1.01000E+02	5.90000E+01	0.00000E+00
84	1.08000E+02	5.90000E+01	0.00000E+00
85	6.00000E+00	6.80000E+01	0.00000E+00
86	1.80000E+01	6.80000E+01	0.00000E+00
87	2.80000E+01	6.80000E+01	0.00000E+00
88	3.80000E+01	6.80000E+01	0.00000E+00
89	4.80000E+01	6.80000E+01	0.00000E+00
90	5.80000E+01	6.80000E+01	0.00000E+00
91	6.80000E+01	6.80000E+01	0.00000E+00
92	7.70000E+01	6.80000E+01	0.00000E+00
93	8.60000E+01	6.80000E+01	0.00000E+00
94	9.40000E+01	6.80000E+01	0.00000E+00
95	1.01000E+02	6.80000E+01	0.00000E+00
96	1.08000E+02	6.80000E+01	0.00000E+00
97	6.00000E+00	7.60000E+01	0.00000E+00
98	1.80000E+01	7.60000E+01	0.00000E+00
99	2.80000E+01	7.60000E+01	0.00000E+00
100	3.80000E+01	7.60000E+01	0.00000E+00
101	4.80000E+01	7.60000E+01	0.00000E+00
102	5.80000E+01	7.60000E+01	0.00000E+00
103	6.80000E+01	7.60000E+01	0.00000E+00
104	7.70000E+01	7.60000E+01	0.00000E+00
105	8.60000E+01	7.60000E+01	0.00000E+00
106	9.40000E+01	7.60000E+01	0.00000E+00
107	1.01000E+02	7.60000E+01	0.00000E+00
108	1.08000E+02	7.60000E+01	0.00000E+00
109	6.00000E+00	8.40000E+01	0.00000E+00
110	1.80000E+01	8.40000E+01	0.00000E+00
111	2.80000E+01	8.40000E+01	0.00000E+00
112	3.80000E+01	8.40000E+01	0.00000E+00
113	4.80000E+01	8.40000E+01	0.00000E+00

KAISER ENGINEERS HANFORD S/N:801854 03/28/95
PAGE 4 RUN ID=TI77162 13:07:10

========== I M A G E S 3 D ==========
= Copyright (c) 1984 Celestial Software Inc. =
==========

CHECK GEOMETRY Version 2.0 07/01/90

Node	X-Coord.	Y-Coord.	Z-Coord.
114	5.80000E+01	8.40000E+01	0.00000E+00
115	6.80000E+01	8.40000E+01	0.00000E+00
116	7.70000E+01	8.40000E+01	0.00000E+00
117	8.60000E+01	8.40000E+01	0.00000E+00
118	9.40000E+01	8.40000E+01	0.00000E+00
119	1.01000E+02	8.40000E+01	0.00000E+00
120	1.08000E+02	8.40000E+01	0.00000E+00
121	4.50000E+00	9.00000E+01	0.00000E+00
122	1.80000E+01	9.00000E+01	0.00000E+00
123	2.80000E+01	9.00000E+01	0.00000E+00
124	3.80000E+01	9.00000E+01	0.00000E+00
125	4.80000E+01	9.00000E+01	0.00000E+00
126	5.80000E+01	9.00000E+01	0.00000E+00
127	6.80000E+01	9.00000E+01	0.00000E+00
128	7.70000E+01	9.00000E+01	0.00000E+00
129	8.60000E+01	9.00000E+01	0.00000E+00
130	9.40000E+01	9.00000E+01	0.00000E+00
131	1.01000E+02	9.00000E+01	0.00000E+00
132	1.09500E+02	9.00000E+01	0.00000E+00
133	3.00000E+00	9.60000E+01	0.00000E+00
134	1.80000E+01	9.60000E+01	0.00000E+00
135	2.80000E+01	9.60000E+01	0.00000E+00
136	3.80000E+01	9.60000E+01	0.00000E+00
137	4.80000E+01	9.60000E+01	0.00000E+00
138	5.80000E+01	9.60000E+01	0.00000E+00
139	6.80000E+01	9.60000E+01	0.00000E+00
140	7.70000E+01	9.60000E+01	0.00000E+00
141	8.60000E+01	9.60000E+01	0.00000E+00
142	9.40000E+01	9.60000E+01	0.00000E+00
143	1.01000E+02	9.60000E+01	0.00000E+00
144	1.11000E+02	9.60000E+01	0.00000E+00
145	1.50000E+00	1.02000E+02	0.00000E+00
146	1.80000E+01	1.02000E+02	0.00000E+00
147	2.80000E+01	1.02000E+02	0.00000E+00
148	3.80000E+01	1.02000E+02	0.00000E+00
149	4.80000E+01	1.02000E+02	0.00000E+00
150	5.80000E+01	1.02000E+02	0.00000E+00
151	6.80000E+01	1.02000E+02	0.00000E+00
152	7.70000E+01	1.02000E+02	0.00000E+00
153	8.60000E+01	1.02000E+02	0.00000E+00
154	9.40000E+01	1.02000E+02	0.00000E+00
155	1.01000E+02	1.02000E+02	0.00000E+00

KAISER ENGINEERS HANFORD S/N:801854 03/28/95
PAGE 5 RUN ID=TI77162 13:07:10

========== I M A G E S 3 D ==========
= Copyright (c) 1984 Celestial Software Inc. =
==========

CHECK GEOMETRY Version 2.0 07/01/90

Node	X-Coord.	Y-Coord.	Z-Coord.
156	1.12500E+02	1.02000E+02	0.00000E+00
157	0.00000E+00	1.08000E+02	0.00000E+00
158	1.80000E+01	1.08000E+02	0.00000E+00
159	2.80000E+01	1.08000E+02	0.00000E+00
160	3.80000E+01	1.08000E+02	0.00000E+00
161	4.80000E+01	1.08000E+02	0.00000E+00
162	5.80000E+01	1.08000E+02	0.00000E+00
163	6.80000E+01	1.08000E+02	0.00000E+00
164	7.70000E+01	1.08000E+02	0.00000E+00
165	8.60000E+01	1.08000E+02	0.00000E+00
166	9.40000E+01	1.08000E+02	0.00000E+00
167	1.01000E+02	1.08000E+02	0.00000E+00
168	1.14000E+02	1.08000E+02	0.00000E+00

PLATE ELEMENT CONNECTIVITY

	Plate No.	Nodes I	J	K	L	Mat No.	Thickness	Area	Shear Web Thickness	Aspect Ratio	Plate Type
QUAD	1	1	2	14	13	1	1.200E+01	1.200E+02		1.200E+00	M+B
QUAD	2	2	3	15	14	1	1.200E+01	1.000E+02		1.000E+00	M+B
QUAD	3	3	4	16	15	1	1.200E+01	1.000E+02		1.000E+00	M+B
QUAD	4	4	5	17	16	1	1.200E+01	1.000E+02		1.000E+00	M+B
QUAD	5	5	6	18	17	1	1.200E+01	1.000E+02		1.000E+00	M+B
QUAD	6	6	7	19	18	1	1.200E+01	1.000E+02		1.000E+00	M+B
QUAD	7	7	8	20	19	1	1.200E+01	9.000E+01		9.000E-01	M+B
QUAD	8	8	9	21	20	1	1.200E+01	9.000E+01		9.000E-01	M+B
QUAD	9	9	10	22	21	1	1.200E+01	8.000E+01		8.000E-01	M+B
QUAD	10	10	11	23	22	1	1.200E+01	7.000E+01		7.000E-01	M+B
QUAD	11	11	12	24	23	1	1.200E+01	7.000E+01		7.000E-01	M+B
QUAD	12	13	14	26	25	1	1.200E+01	1.200E+02		1.200E+00	M+B
QUAD	13	14	15	27	26	1	1.200E+01	1.000E+02		1.000E+00	M+B
QUAD	14	15	16	28	27	1	1.200E+01	1.000E+02		1.000E+00	M+B
QUAD	15	16	17	29	28	1	1.200E+01	1.000E+02		1.000E+00	M+B
QUAD	16	17	18	30	29	1	1.200E+01	1.000E+02		1.000E+00	M+B
QUAD	17	18	19	31	30	1	1.200E+01	1.000E+02		1.000E+00	M+B
QUAD	18	19	20	32	31	1	1.200E+01	9.000E+01		9.000E-01	M+B
QUAD	19	20	21	33	32	1	1.200E+01	9.000E+01		9.000E-01	M+B
QUAD	20	21	22	34	33	1	1.200E+01	8.000E+01		8.000E-01	M+B
QUAD	21	22	23	35	34	1	1.200E+01	7.000E+01		7.000E-01	M+B

KAISER ENGINEERS HANFORD S/N:801854 03/28/95
PAGE 6 RUN ID=TI77162 13:07:11

========== I M A G E S 3 D ==========
= Copyright (c) 1984 Celestial Software Inc. =
==========

CHECK GEOMETRY Version 2.0 07/01/90

	Plate No.	Nodes I	J	K	L	Mat No.	Thickness	Area	Shear Web Thickness	Aspect Ratio	Plate Type
QUAD	22	23	24	36	35	1	1.200E+01	7.000E+01		7.000E-01	M+B
QUAD	23	25	26	38	37	1	1.200E+01	1.200E+02		1.200E+00	M+B
QUAD	24	26	27	39	38	1	1.200E+01	1.000E+02		1.000E+00	M+B
QUAD	25	27	28	40	39	1	1.200E+01	1.000E+02		1.000E+00	M+B
QUAD	26	28	29	41	40	1	1.200E+01	1.000E+02		1.000E+00	M+B
QUAD	27	29	30	42	41	1	1.200E+01	1.000E+02		1.000E+00	M+B
QUAD	28	30	31	43	42	1	1.200E+01	1.000E+02		1.000E+00	M+B
QUAD	29	31	32	44	43	1	1.200E+01	9.000E+01		9.000E-01	M+B
QUAD	30	32	33	45	44	1	1.200E+01	9.000E+01		9.000E-01	M+B
QUAD	31	33	34	46	45	1	1.200E+01	8.000E+01		8.000E-01	M+B
QUAD	32	34	35	47	46	1	1.200E+01	7.000E+01		7.000E-01	M+B
QUAD	33	35	36	48	47	1	1.200E+01	7.000E+01		7.000E-01	M+B
QUAD	34	37	38	50	49	1	1.200E+01	1.200E+02		1.200E+00	M+B
QUAD	35	38	39	51	50	1	1.200E+01	1.000E+02		1.000E+00	M+B
QUAD	36	39	40	52	51	1	1.200E+01	1.000E+02		1.000E+00	M+B
QUAD	37	40	41	53	52	1	1.200E+01	1.000E+02		1.000E+00	M+B
QUAD	38	41	42	54	53	1	1.200E+01	1.000E+02		1.000E+00	M+B
QUAD	39	42	43	55	54	1	1.200E+01	1.000E+02		1.000E+00	M+B
QUAD	40	43	44	56	55	1	1.200E+01	9.000E+01		9.000E-01	M+B
QUAD	41	44	45	57	56	1	1.200E+01	9.000E+01		9.000E-01	M+B
QUAD	42	45	46	58	57	1	1.200E+01	8.000E+01		8.000E-01	M+B
QUAD	43	46	47	59	58	1	1.200E+01	7.000E+01		7.000E-01	M+B
QUAD	44	47	48	60	59	1	1.200E+01	7.000E+01		7.000E-01	M+B
QUAD	45	49	50	62	61	1	1.200E+01	1.200E+02		1.200E+00	M+B
QUAD	46	50	51	63	62	1	1.200E+01	1.000E+02		1.000E+00	M+B
QUAD	47	51	52	64	63	1	1.200E+01	1.000E+02		1.000E+00	M+B
QUAD	48	52	53	65	64	1	1.200E+01	1.000E+02		1.000E+00	M+B
QUAD	49	53	54	66	65	1	1.200E+01	1.000E+02		1.000E+00	M+B
QUAD	50	54	55	67	66	1	1.200E+01	1.000E+02		1.000E+00	M+B
QUAD	51	55	56	68	67	1	1.200E+01	9.000E+01		9.000E-01	M+B
QUAD	52	56	57	69	68	1	1.200E+01	9.000E+01		9.000E-01	M+B
QUAD	53	57	58	70	69	1	1.200E+01	8.000E+01		8.000E-01	M+B
QUAD	54	58	59	71	70	1	1.200E+01	7.000E+01		7.000E-01	M+B
QUAD	55	59	60	72	71	1	1.200E+01	7.000E+01		7.000E-01	M+B
QUAD	56	61	62	74	73	1	1.200E+01	1.080E+02		1.333E+00	M+B
QUAD	57	62	63	75	74	1	1.200E+01	9.000E+01		1.111E+00	M+B
QUAD	58	63	64	76	75	1	1.200E+01	9.000E+01		1.111E+00	M+B
QUAD	59	64	65	77	76	1	1.200E+01	9.000E+01		1.111E+00	M+B
QUAD	60	65	66	78	77	1	1.200E+01	9.000E+01		1.111E+00	M+B
QUAD	61	66	67	79	78	1	1.200E+01	9.000E+01		1.111E+00	M+B
QUAD	62	67	68	80	79	1	1.200E+01	8.100E+01		1.000E+00	M+B

KAISER ENGINEERS HANFORD S/N:801854 03/28/95
PAGE 7 RUN ID=TI77162 13:07:11

========== I M A G E S 3 D ==========
= Copyright (c) 1984 Celestial Software Inc. =
==========

CHECK GEOMETRY Version 2.0 07/01/90

	Plate No.	Nodes I	J	K	L	Mat No.	Thickness	Area	Shear Web Thickness	Aspect Ratio	Plate Type
QUAD	63	68	69	81	80	1	1.200E+01	8.100E+01		1.000E+00	M+B
QUAD	64	69	70	82	81	1	1.200E+01	7.200E+01		8.889E-01	M+B
QUAD	65	70	71	83	82	1	1.200E+01	6.300E+01		7.778E-01	M+B
QUAD	66	71	72	84	83	1	1.200E+01	6.300E+01		7.778E-01	M+B
QUAD	67	73	74	86	85	1	1.200E+01	1.080E+02		1.333E+00	M+B
QUAD	68	74	75	87	86	1	1.200E+01	9.000E+01		1.111E+00	M+B
QUAD	69	75	76	88	87	1	1.200E+01	9.000E+01		1.111E+00	M+B
QUAD	70	76	77	89	88	1	1.200E+01	9.000E+01		1.111E+00	M+B
QUAD	71	77	78	90	89	1	1.200E+01	9.000E+01		1.111E+00	M+B
QUAD	72	78	79	91	90	1	1.200E+01	9.000E+01		1.111E+00	M+B
QUAD	73	79	80	92	91	1	1.200E+01	8.100E+01		1.000E+00	M+B
QUAD	74	80	81	93	92	1	1.200E+01	8.100E+01		1.000E+00	M+B
QUAD	75	81	82	94	93	1	1.200E+01	7.200E+01		8.889E-01	M+B
QUAD	76	82	83	95	94	1	1.200E+01	6.300E+01		7.778E-01	M+B
QUAD	77	83	84	96	95	1	1.200E+01	6.300E+01		7.778E-01	M+B
QUAD	78	85	86	98	97	1	1.200E+01	9.600E+01		1.500E+00	M+B
QUAD	79	86	87	99	98	1	1.200E+01	8.000E+01		1.250E+00	M+B
QUAD	80	87	88	100	99	1	1.200E+01	8.000E+01		1.250E+00	M+B
QUAD	81	88	89	101	100	1	1.200E+01	8.000E+01		1.250E+00	M+B
QUAD	82	89	90	102	101	1	1.200E+01	8.000E+01		1.250E+00	M+B
QUAD	83	90	91	103	102	1	1.200E+01	8.000E+01		1.250E+00	M+B
QUAD	84	91	92	104	103	1	1.200E+01	7.200E+01		1.125E+00	M+B
QUAD	85	92	93	105	104	1	1.200E+01	7.200E+01		1.125E+00	M+B
QUAD	86	93	94	106	105	1	1.200E+01	6.400E+01		1.000E+00	M+B
QUAD	87	94	95	107	106	1	1.200E+01	5.600E+01		8.750E-01	M+B
QUAD	88	95	96	108	107	1	1.200E+01	5.600E+01		8.750E-01	M+B
QUAD	89	97	98	110	109	1	1.200E+01	9.600E+01		1.500E+00	M+B
QUAD	90	98	99	111	110	1	1.200E+01	8.000E+01		1.250E+00	M+B
QUAD	91	99	100	112	111	1	1.200E+01	8.000E+01		1.250E+00	M+B
QUAD	92	100	101	113	112	1	1.200E+01	8.000E+01		1.250E+00	M+B
QUAD	93	101	102	114	113	1	1.200E+01	8.000E+01		1.250E+00	M+B
QUAD	94	102	103	115	114	1	1.200E+01	8.000E+01		1.250E+00	M+B
QUAD	95	103	104	116	115	1	1.200E+01	7.200E+01		1.125E+00	M+B
QUAD	96	104	105	117	116	1	1.200E+01	7.200E+01		1.125E+00	M+B
QUAD	97	105	106	118	117	1	1.200E+01	6.400E+01		1.000E+00	M+B
QUAD	98	106	107	119	118	1	1.200E+01	5.600E+01		8.750E-01	M+B
QUAD	99	107	108	120	119	1	1.200E+01	5.600E+01		8.750E-01	M+B
QUAD	100	109	110	122	121	2	7.630E+00	7.650E+01		2.109E+00	M+B
QUAD	101	110	111	123	122	2	7.630E+00	6.000E+01		1.667E+00	M+B
QUAD	102	111	112	124	123	2	7.630E+00	6.000E+01		1.667E+00	M+B
QUAD	103	112	113	125	124	2	7.630E+00	6.000E+01		1.667E+00	M+B

KAISER ENGINEERS HANFORD S/N:801854 03/28/95
PAGE 8 RUN ID=TI77162 13:07:11

========== I M A G E S 3 D ==========
= Copyright (c) 1984 Celestial Software Inc. =
==========

CHECK GEOMETRY Version 2.0 07/01/90

	Plate No.	Nodes I	J	K	L	Mat No.	Thickness	Area	Shear Web Thickness	Aspect Ratio	Plate Type
QUAD	104	113	114	126	125	2	7.630E+00	6.000E+01		1.667E+00	M+B
QUAD	105	114	115	127	126	2	7.630E+00	6.000E+01		1.667E+00	M+B
QUAD	106	115	116	128	127	2	7.630E+00	5.400E+01		1.500E+00	M+B
QUAD	107	116	117	129	128	2	7.630E+00	5.400E+01		1.500E+00	M+B
QUAD	108	117	118	130	129	2	7.630E+00	4.800E+01		1.333E+00	M+B
QUAD	109	118	119	131	130	2	7.630E+00	4.200E+01		1.167E+00	M+B
QUAD	110	119	120	132	131	2	7.630E+00	4.650E+01		1.282E+00	M+B
QUAD	111	121	122	134	133	2	7.630E+00	8.550E+01		2.357E+00	M+B
QUAD	112	122	123	135	134	2	7.630E+00	6.000E+01		1.667E+00	M+B
QUAD	113	123	124	136	135	2	7.630E+00	6.000E+01		1.667E+00	M+B
QUAD	114	124	125	137	136	2	7.630E+00	6.000E+01		1.667E+00	M+B
QUAD	115	125	126	138	137	2	7.630E+00	6.000E+01		1.667E+00	M+B
QUAD	116	126	127	139	138	2	7.630E+00	6.000E+01		1.667E+00	M+B
QUAD	117	127	128	140	139	2	7.630E+00	5.400E+01		1.500E+00	M+B
QUAD	118	128	129	141	140	2	7.630E+00	5.400E+01		1.500E+00	M+B
QUAD	119	129	130	142	141	2	7.630E+00	4.800E+01		1.333E+00	M+B
QUAD	120	130	131	143	142	2	7.630E+00	4.200E+01		1.167E+00	M+B
QUAD	121	131	132	144	143	2	7.630E+00	5.550E+01		1.530E+00	M+B
QUAD	122	133	134	146	145	2	7.630E+00	9.450E+01		2.605E+00	M+B
QUAD	123	134	135	147	146	2	7.630E+00	6.000E+01		1.667E+00	M+B
QUAD	124	135	136	148	147	2	7.630E+00	6.000E+01		1.667E+00	M+B
QUAD	125	136	137	149	148	2	7.630E+00	6.000E+01		1.667E+00	M+B
QUAD	126	137	138	150	149	2	7.630E+00	6.000E+01		1.667E+00	M+B
QUAD	127	138	139	151	150	2	7.630E+00	6.000E+01		1.667E+00	M+B
QUAD	128	139	140	152	151	2	7.630E+00	5.400E+01		1.500E+00	M+B
QUAD	129	140	141	153	152	2	7.630E+00	5.400E+01		1.500E+00	M+B
QUAD	130	141	142	154	153	2	7.630E+00	4.800E+01		1.333E+00	M+B
QUAD	131	142	143	155	154	2	7.630E+00	4.200E+01		1.167E+00	M+B
QUAD	132	143	144	156	155	2	7.630E+00	6.450E+01		1.778E+00	M+B
QUAD	133	145	146	158	157	2	7.630E+00	1.035E+02		2.853E+00	M+B
QUAD	134	146	147	159	158	2	7.630E+00	6.000E+01		1.667E+00	M+B
QUAD	135	147	148	160	159	2	7.630E+00	6.000E+01		1.667E+00	M+B
QUAD	136	148	149	161	160	2	7.630E+00	6.000E+01		1.667E+00	M+B
QUAD	137	149	150	162	161	2	7.630E+00	6.000E+01		1.667E+00	M+B
QUAD	138	150	151	163	162	2	7.630E+00	6.000E+01		1.667E+00	M+B
QUAD	139	151	152	164	163	2	7.630E+00	5.400E+01		1.500E+00	M+B
QUAD	140	152	153	165	164	2	7.630E+00	5.400E+01		1.500E+00	M+B
QUAD	141	153	154	166	165	2	7.630E+00	4.800E+01		1.333E+00	M+B
QUAD	142	154	155	167	166	2	7.630E+00	4.200E+01		1.167E+00	M+B
QUAD	143	155	156	168	167	2	7.630E+00	7.350E+01		2.026E+00	M+B

KAISER ENGINEERS HANFORD S/N:801854 03/28/95
PAGE 9 RUN ID=TI77162 13:07:11

========== I M A G E S 3 D ==========
= Copyright (c) 1984 Celestial Software Inc. =
==========

CHECK GEOMETRY Version 2.0 07/01/90

RESTRAINTS

Node No	Global/Local	Restraint Directions
1	GLOBAL	X Y Z RX RY RZ
2	GLOBAL	X Y Z RX RY RZ
3	GLOBAL	X Y Z RX RY RZ
4	GLOBAL	X Y Z RX RY RZ
5	GLOBAL	X Y Z RX RY RZ
6	GLOBAL	X Y Z RX RY RZ
7	GLOBAL	X Y Z RX RY RZ
8	GLOBAL	X Y Z RX RY RZ
9	GLOBAL	X Y Z RX RY RZ
10	GLOBAL	X Y Z RX RY RZ
11	GLOBAL	X Y Z RX RY RZ
12	GLOBAL	X Y Z RX RY RZ
13	GLOBAL	X Y Z RX RY RZ
24	GLOBAL	X Y Z RX RY RZ
25	GLOBAL	X Y Z RX RY RZ
36	GLOBAL	X Y Z RX RY RZ
37	GLOBAL	X Y Z RX RY RZ
48	GLOBAL	X Y Z RX RY RZ
49	GLOBAL	X Y Z RX RY RZ
60	GLOBAL	X Y Z RX RY RZ
61	GLOBAL	X Y Z RX RY RZ
72	GLOBAL	X Y Z RX RY RZ
73	GLOBAL	X Y Z RX RY RZ
84	GLOBAL	X Y Z RX RY RZ
85	GLOBAL	X Y Z RX RY RZ
96	GLOBAL	X Y Z RX RY RZ
97	GLOBAL	X Y Z RX RY RZ
108	GLOBAL	X Y Z RX RY RZ
109	GLOBAL	X Y Z RX RY RZ
120	GLOBAL	X Y Z RX RY RZ
121	GLOBAL	X Y Z RX RY RZ
132	GLOBAL	X Y Z RX RY RZ
133	GLOBAL	X Y Z RX RY RZ
144	GLOBAL	X Y Z RX RY RZ
145	GLOBAL	X Y Z RX RY RZ
156	GLOBAL	X Y Z RX RY RZ
157	GLOBAL	X Y Z RX RY RZ
168	GLOBAL	X Y Z RX RY RZ

KAISER ENGINEERS HANFORD S/N:801854 03/28/95
PAGE 10 Run ID=TI77162 13:07:53

========== I M A G E S 3 D ==========
= Copyright (c) 1984 Celestial Software Inc. =
==========

SOLVE DISPLACEMENTS Version 2.0 07/01/90

L O A D C A S E 1

STIFFNESS AT NODE 94

GRAVITY LOADING

Direction	Gravity Factor	Load Factor
X	.0000E+00	.1000E+01
Y	.0000E+00	.1000E+01
Z	.0000E+00	.1000E+01

INERTIA LOADING

Direction	Translational Accel.	Rotational Accel.	Rotational Velocity	Origin
X	.0000E+00	.0000E+00	.0000E+00	.0000E+00
Y	.0000E+00	.0000E+00	.0000E+00	.0000E+00
Z	.0000E+00	.0000E+00	.0000E+00	.0000E+00

Gravity Acceleration = .3864E+03

CONCENTRATED LOADS

Node	Fx	Fy	Fz	Mx	My	Mz
94	.0000E+00	.0000E+00	.1000E+04	.0000E+00	.0000E+00	.0000E+00

REFERENCE TEMPERATURE = .0000E+00

KAISER ENGINEERS HANFORD S/N:801854 03/28/95
PAGE 11 Run ID=TI77162 13:07:54

========== I M A G E S 3 D ==========
= Copyright (c) 1984 Celestial Software Inc. =
==========

SOLVE DISPLACEMENTS Version 2.0 07/01/90

L O A D C A S E 1

STIFFNESS AT NODE 94

APPLIED LOAD VECTOR

Node	Fx	Fy	Fz	Mx	My	Mz
94	.0000E+00	.0000E+00	.1000E+04	.0000E+00	.0000E+00	.0000E+00

KAISER ENGINEERS HANFORD S/N:801854 03/28/95
PAGE 12 Run ID=TI77162 13:07:56

========== I M A G E S 3 D ==========
= Copyright (c) 1984 Celestial Software Inc. =
==========

SOLVE DISPLACEMENTS Version 2.0 07/01/90

L O A D C A S E 1

STIFFNESS AT NODE 94

DISPLACEMENTS

	Translations			/	Rotations		
Node	X	Y	Z	/	X	Y	Z
1	.0000E+00	.0000E+00	.0000E+00	/	.0000E+00	.0000E+00	.0000E+00
2	.0000E+00	.0000E+00	.0000E+00	/	.0000E+00	.0000E+00	.0000E+00
3	.0000E+00	.0000E+00	.0000E+00	/	.0000E+00	.0000E+00	.0000E+00
4	.0000E+00	.0000E+00	.0000E+00	/	.0000E+00	.0000E+00	.0000E+00
5	.0000E+00	.0000E+00	.0000E+00	/	.0000E+00	.0000E+00	.0000E+00
6	.0000E+00	.0000E+00	.0000E+00	/	.0000E+00	.0000E+00	.0000E+00
7	.0000E+00	.0000E+00	.0000E+00	/	.0000E+00	.0000E+00	.0000E+00
8	.0000E+00	.0000E+00	.0000E+00	/	.0000E+00	.0000E+00	.0000E+00
9	.0000E+00	.0000E+00	.0000E+00	/	.0000E+00	.0000E+00	.0000E+00
10	.0000E+00	.0000E+00	.0000E+00	/	.0000E+00	.0000E+00	.0000E+00
11	.0000E+00	.0000E+00	.0000E+00	/	.0000E+00	.0000E+00	.0000E+00
12	.0000E+00	.0000E+00	.0000E+00	/	.0000E+00	.0000E+00	.0000E+00
13	.0000E+00	.0000E+00	.0000E+00	/	.0000E+00	.0000E+00	.0000E+00
14	.0000E+00	.0000E+00	.6549E-06	/	.3894E-06	-.3709E-06	.0000E+00
15	.0000E+00	.0000E+00	.4348E-05	/	.9152E-06	-.6388E-06	.0000E+00
16	.0000E+00	.0000E+00	.9685E-05	/	.1635E-05	-.7394E-06	.0000E+00
17	.0000E+00	.0000E+00	.1498E-04	/	.2346E-05	-.6142E-06	.0000E+00
18	.0000E+00	.0000E+00	.1838E-04	/	.2826E-05	-.2582E-06	.0000E+00
19	.0000E+00	.0000E+00	.1821E-04	/	.2869E-05	.2553E-06	.0000E+00
20	.0000E+00	.0000E+00	.1444E-04	/	.2453E-05	.6965E-06	.0000E+00
21	.0000E+00	.0000E+00	.8194E-05	/	.1697E-05	.9030E-06	.0000E+00
22	.0000E+00	.0000E+00	.2615E-05	/	.9602E-06	.7643E-06	.0000E+00
23	.0000E+00	.0000E+00	-.2706E-06	/	.4594E-06	.4218E-06	.0000E+00
24	.0000E+00	.0000E+00	.0000E+00	/	.0000E+00	.0000E+00	.0000E+00
25	.0000E+00	.0000E+00	.0000E+00	/	.0000E+00	.0000E+00	.0000E+00
26	.0000E+00	.0000E+00	.4982E-05	/	.7545E-06	-.9418E-06	.0000E+00
27	.0000E+00	.0000E+00	.1722E-04	/	.1666E-05	-.1531E-05	.0000E+00
28	.0000E+00	.0000E+00	.3372E-04	/	.2882E-05	-.1759E-05	.0000E+00
29	.0000E+00	.0000E+00	.5022E-04	/	.4122E-05	-.1519E-05	.0000E+00
30	.0000E+00	.0000E+00	.6165E-04	/	.5077E-05	-.7631E-06	.0000E+00
31	.0000E+00	.0000E+00	.6297E-04	/	.5391E-05	.4174E-06	.0000E+00
32	.0000E+00	.0000E+00	.5309E-04	/	.4885E-05	.1540E-05	.0000E+00
33	.0000E+00	.0000E+00	.3446E-04	/	.3648E-05	.2216E-05	.0000E+00
34	.0000E+00	.0000E+00	.1586E-04	/	.2244E-05	.2054E-05	.0000E+00
35	.0000E+00	.0000E+00	.3747E-05	/	.1145E-05	.1249E-05	.0000E+00
36	.0000E+00	.0000E+00	.0000E+00	/	.0000E+00	.0000E+00	.0000E+00
37	.0000E+00	.0000E+00	.0000E+00	/	.0000E+00	.0000E+00	.0000E+00
38	.0000E+00	.0000E+00	.1190E-04	/	.9985E-06	-.1797E-05	.0000E+00
39	.0000E+00	.0000E+00	.3626E-04	/	.2161E-05	-.2814E-05	.0000E+00
40	.0000E+00	.0000E+00	.6808E-04	/	.3714E-05	-.3240E-05	.0000E+00

KAISER ENGINEERS HANFORD S/N:801854 03/28/95
PAGE 13 Run ID=TI77162 13:07:56

========== I M A G E S 3 D ==========
= Copyright (c) 1984 Celestial Software Inc. =
==========

SOLVE DISPLACEMENTS Version 2.0 07/01/90

L O A D C A S E 1

STIFFNESS AT NODE 94

Node	Translations X	Translations Y	Translations Z	/	Rotations X	Rotations Y	Rotations Z
41	.0000E+00	.0000E+00	.1006E-03	/	.5383E-05	-.2941E-05	.0000E+00
42	.0000E+00	.0000E+00	.1256E-03	/	.6890E-05	-.1787E-05	.0000E+00
43	.0000E+00	.0000E+00	.1334E-03	/	.7822E-05	.2393E-06	.0000E+00
44	.0000E+00	.0000E+00	.1189E-03	/	.7658E-05	.2480E-05	.0000E+00
45	.0000E+00	.0000E+00	.8394E-04	/	.6241E-05	.4198E-05	.0000E+00
46	.0000E+00	.0000E+00	.4375E-04	/	.4143E-05	.4342E-05	.0000E+00
47	.0000E+00	.0000E+00	.1354E-04	/	.2231E-05	.2905E-05	.0000E+00
48	.0000E+00	.0000E+00	.0000E+00	/	.0000E+00	.0000E+00	.0000E+00
49	.0000E+00	.0000E+00	.0000E+00	/	.0000E+00	.0000E+00	.0000E+00
50	.0000E+00	.0000E+00	.2009E-04	/	.1097E-05	-.2807E-05	.0000E+00
51	.0000E+00	.0000E+00	.5860E-04	/	.2366E-05	-.4317E-05	.0000E+00
52	.0000E+00	.0000E+00	.1083E-03	/	.4079E-05	-.5006E-05	.0000E+00
53	.0000E+00	.0000E+00	.1605E-03	/	.6008E-05	-.4778E-05	.0000E+00
54	.0000E+00	.0000E+00	.2055E-03	/	.8003E-05	-.3460E-05	.0000E+00
55	.0000E+00	.0000E+00	.2288E-03	/	.9813E-05	-.7742E-06	.0000E+00
56	.0000E+00	.0000E+00	.2181E-03	/	.1073E-04	.2801E-05	.0000E+00
57	.0000E+00	.0000E+00	.1680E-03	/	.9843E-05	.6471E-05	.0000E+00
58	.0000E+00	.0000E+00	.9709E-04	/	.7287E-05	.7779E-05	.0000E+00
59	.0000E+00	.0000E+00	.3442E-04	/	.4192E-05	.5774E-05	.0000E+00
60	.0000E+00	.0000E+00	.0000E+00	/	.0000E+00	.0000E+00	.0000E+00
61	.0000E+00	.0000E+00	.0000E+00	/	.0000E+00	.0000E+00	.0000E+00
62	.0000E+00	.0000E+00	.2847E-04	/	.1075E-05	-.3848E-05	.0000E+00
63	.0000E+00	.0000E+00	.8146E-04	/	.2302E-05	-.5859E-05	.0000E+00
64	.0000E+00	.0000E+00	.1495E-03	/	.3951E-05	-.6835E-05	.0000E+00
65	.0000E+00	.0000E+00	.2225E-03	/	.5831E-05	-.6774E-05	.0000E+00
66	.0000E+00	.0000E+00	.2898E-03	/	.7900E-05	-.5568E-05	.0000E+00
67	.0000E+00	.0000E+00	.3387E-03	/	.1024E-04	-.2905E-05	.0000E+00
68	.0000E+00	.0000E+00	.3514E-03	/	.1249E-04	.1504E-05	.0000E+00
69	.0000E+00	.0000E+00	.3031E-03	/	.1410E-04	.7747E-05	.0000E+00
70	.0000E+00	.0000E+00	.1992E-03	/	.1178E-04	.1216E-04	.0000E+00
71	.0000E+00	.0000E+00	.8209E-04	/	.7923E-05	.1063E-04	.0000E+00
72	.0000E+00	.0000E+00	.0000E+00	/	.0000E+00	.0000E+00	.0000E+00
73	.0000E+00	.0000E+00	.0000E+00	/	.0000E+00	.0000E+00	.0000E+00
74	.0000E+00	.0000E+00	.3556E-04	/	.9859E-06	-.4725E-05	.0000E+00
75	.0000E+00	.0000E+00	.1006E-03	/	.2069E-05	-.7132E-05	.0000E+00
76	.0000E+00	.0000E+00	.1836E-03	/	.3474E-05	-.8314E-05	.0000E+00
77	.0000E+00	.0000E+00	.2732E-03	/	.5002E-05	-.8369E-05	.0000E+00
78	.0000E+00	.0000E+00	.3590E-03	/	.6600E-05	-.7286E-05	.0000E+00
79	.0000E+00	.0000E+00	.4301E-03	/	.8358E-05	-.4940E-05	.0000E+00
80	.0000E+00	.0000E+00	.4723E-03	/	.1051E-04	-.1437E-05	.0000E+00
81	.0000E+00	.0000E+00	.4805E-03	/	.1361E-04	.6496E-05	.0000E+00

KAISER ENGINEERS HANFORD S/N:801854 03/28/95
PAGE 14 Run ID=TI77162 13:07:56

========== I M A G E S 3 D ==========
= Copyright (c) 1984 Celestial Software Inc. =
==========

SOLVE DISPLACEMENTS Version 2.0 07/01/90

L O A D C A S E 1

STIFFNESS AT NODE 94

Node	Translations X	Translations Y	Translations Z	/	Rotations X	Rotations Y	Rotations Z
82	.0000E+00	.0000E+00	.3549E-03	/	.1726E-04	.1600E-04	.0000E+00
83	.0000E+00	.0000E+00	.1835E-03	/	.9188E-05	.1674E-04	.0000E+00
84	.0000E+00	.0000E+00	.0000E+00	/	.0000E+00	.0000E+00	.0000E+00
85	.0000E+00	.0000E+00	.0000E+00	/	.0000E+00	.0000E+00	.0000E+00
86	.0000E+00	.0000E+00	.4201E-04	/	.8625E-06	-.5498E-05	.0000E+00
87	.0000E+00	.0000E+00	.1173E-03	/	.1747E-05	-.8200E-05	.0000E+00
88	.0000E+00	.0000E+00	.2122E-03	/	.2815E-05	-.9475E-05	.0000E+00
89	.0000E+00	.0000E+00	.3139E-03	/	.3815E-05	-.9487E-05	.0000E+00
90	.0000E+00	.0000E+00	.4114E-03	/	.4555E-05	-.8289E-05	.0000E+00
91	.0000E+00	.0000E+00	.4941E-03	/	.4846E-05	-.5809E-05	.0000E+00
92	.0000E+00	.0000E+00	.5483E-03	/	.4557E-05	-.2387E-05	.0000E+00
93	.0000E+00	.0000E+00	.5830E-03	/	.3645E-05	.1044E-05	.0000E+00
94	.0000E+00	.0000E+00	.7107E-03	/	.2384E-05	.1853E-04	.0000E+00
95	.0000E+00	.0000E+00	.2499E-03	/	.1326E-05	.2561E-04	.0000E+00
96	.0000E+00	.0000E+00	.0000E+00	/	.0000E+00	.0000E+00	.0000E+00
97	.0000E+00	.0000E+00	.0000E+00	/	.0000E+00	.0000E+00	.0000E+00
98	.0000E+00	.0000E+00	.4726E-04	/	.6943E-06	-.6073E-05	.0000E+00
99	.0000E+00	.0000E+00	.1298E-03	/	.1432E-05	-.8970E-05	.0000E+00
100	.0000E+00	.0000E+00	.2324E-03	/	.2252E-05	-.1020E-04	.0000E+00
101	.0000E+00	.0000E+00	.3404E-03	/	.2819E-05	-.1000E-04	.0000E+00
102	.0000E+00	.0000E+00	.4407E-03	/	.2815E-05	-.8373E-05	.0000E+00
103	.0000E+00	.0000E+00	.5199E-03	/	.1742E-05	-.5138E-05	.0000E+00
104	.0000E+00	.0000E+00	.5616E-03	/	-.1011E-05	-.5681E-06	.0000E+00
105	.0000E+00	.0000E+00	.5623E-03	/	-.6126E-05	.8438E-05	.0000E+00
106	.0000E+00	.0000E+00	.4220E-03	/	-.1264E-04	.1908E-04	.0000E+00
107	.0000E+00	.0000E+00	.2121E-03	/	-.6532E-05	.1935E-04	.0000E+00
108	.0000E+00	.0000E+00	.0000E+00	/	.0000E+00	.0000E+00	.0000E+00
109	.0000E+00	.0000E+00	.0000E+00	/	.0000E+00	.0000E+00	.0000E+00
110	.0000E+00	.0000E+00	.5152E-04	/	.3046E-06	-.6608E-05	.0000E+00
111	.0000E+00	.0000E+00	.1402E-03	/	.1139E-05	-.9474E-05	.0000E+00
112	.0000E+00	.0000E+00	.2485E-03	/	.1824E-05	-.1064E-04	.0000E+00
113	.0000E+00	.0000E+00	.3598E-03	/	.2173E-05	-.1023E-04	.0000E+00
114	.0000E+00	.0000E+00	.4575E-03	/	.1764E-05	-.8173E-05	.0000E+00
115	.0000E+00	.0000E+00	.5232E-03	/	-.6015E-07	-.4235E-05	.0000E+00
116	.0000E+00	.0000E+00	.5353E-03	/	-.3537E-05	.2018E-05	.0000E+00
117	.0000E+00	.0000E+00	.4624E-03	/	-.8848E-05	.1166E-04	.0000E+00
118	.0000E+00	.0000E+00	.3054E-03	/	-.1032E-04	.1963E-04	.0000E+00
119	.0000E+00	.0000E+00	.1269E-03	/	-.8626E-05	.1829E-04	.0000E+00
120	.0000E+00	.0000E+00	.0000E+00	/	.0000E+00	.0000E+00	.0000E+00
121	.0000E+00	.0000E+00	.0000E+00	/	.0000E+00	.0000E+00	.0000E+00
122	.0000E+00	.0000E+00	.5537E-04	/	.6735E-06	-.7422E-05	.0000E+00

KAISER ENGINEERS HANFORD S/N:801854 03/28/95
PAGE 15 Run ID=TI77162 13:07:57

```
=============== I M A G E S  3 D ===============
= Copyright (c) 1984   Celestial Software Inc. =
================================================
```

SOLVE DISPLACEMENTS Version 2.0 07/01/90

L O A D C A S E 1

STIFFNESS AT NODE 94

Node	Translations X	Translations Y	Translations Z	Rotations X	Rotations Y	Rotations Z
123	.0000E+00	.0000E+00	.1470E-03	.9965E-06	-.1018E-04	.0000E+00
124	.0000E+00	.0000E+00	.2576E-03	.1208E-05	-.1118E-04	.0000E+00
125	.0000E+00	.0000E+00	.3689E-03	.9756E-06	-.1025E-04	.0000E+00
126	.0000E+00	.0000E+00	.4610E-03	-.2072E-06	-.7240E-05	.0000E+00
127	.0000E+00	.0000E+00	.5111E-03	-.2844E-05	-.1755E-05	.0000E+00
128	.0000E+00	.0000E+00	.4957E-03	-.6371E-05	.5807E-05	.0000E+00
129	.0000E+00	.0000E+00	.3975E-03	-.8826E-05	.1474E-04	.0000E+00
130	.0000E+00	.0000E+00	.2447E-03	-.7715E-05	.1970E-04	.0000E+00
131	.0000E+00	.0000E+00	.9581E-04	-.4403E-05	.1729E-04	.0000E+00
132	.0000E+00	.0000E+00	.0000E+00	.0000E+00	.0000E+00	.0000E+00
133	.0000E+00	.0000E+00	.0000E+00	.0000E+00	.0000E+00	.0000E+00
134	.0000E+00	.0000E+00	.6054E-04	.6313E-06	-.7485E-05	.0000E+00
135	.0000E+00	.0000E+00	.1525E-03	.7845E-06	-.1032E-04	.0000E+00
136	.0000E+00	.0000E+00	.2634E-03	.7760E-06	-.1118E-04	.0000E+00
137	.0000E+00	.0000E+00	.3722E-03	.3013E-06	-.9830E-05	.0000E+00
138	.0000E+00	.0000E+00	.4558E-03	-.1125E-05	-.6085E-05	.0000E+00
139	.0000E+00	.0000E+00	.4883E-03	-.3703E-05	.2423E-06	.0000E+00
140	.0000E+00	.0000E+00	.4521E-03	-.6292E-05	.7801E-05	.0000E+00
141	.0000E+00	.0000E+00	.3438E-03	-.7296E-05	.1490E-04	.0000E+00
142	.0000E+00	.0000E+00	.2038E-03	-.5518E-05	.1739E-04	.0000E+00
143	.0000E+00	.0000E+00	.8293E-04	-.2904E-05	.1404E-04	.0000E+00
144	.0000E+00	.0000E+00	.0000E+00	.0000E+00	.0000E+00	.0000E+00
145	.0000E+00	.0000E+00	.0000E+00	.0000E+00	.0000E+00	.0000E+00
146	.0000E+00	.0000E+00	.6445E-04	.2454E-06	-.7453E-05	.0000E+00
147	.0000E+00	.0000E+00	.1563E-03	.5061E-06	-.1042E-04	.0000E+00
148	.0000E+00	.0000E+00	.2673E-03	.5703E-06	-.1113E-04	.0000E+00
149	.0000E+00	.0000E+00	.3731E-03	.1647E-06	-.9340E-05	.0000E+00
150	.0000E+00	.0000E+00	.4479E-03	-.1126E-05	-.4925E-05	.0000E+00
151	.0000E+00	.0000E+00	.4653E-03	-.3302E-05	.1924E-05	.0000E+00
152	.0000E+00	.0000E+00	.4148E-03	-.5257E-05	.9102E-05	.0000E+00
153	.0000E+00	.0000E+00	.3024E-03	-.5907E-05	.1465E-04	.0000E+00
154	.0000E+00	.0000E+00	.1738E-03	-.4657E-05	.1543E-04	.0000E+00
155	.0000E+00	.0000E+00	.7219E-04	-.2950E-05	.1159E-04	.0000E+00
156	.0000E+00	.0000E+00	.0000E+00	.0000E+00	.0000E+00	.0000E+00
157	.0000E+00	.0000E+00	.0000E+00	.0000E+00	.0000E+00	.0000E+00
158	.0000E+00	.0000E+00	.6470E-04	-.4205E-06	-.7292E-05	.0000E+00
159	.0000E+00	.0000E+00	.1584E-03	.2306E-06	-.1044E-04	.0000E+00
160	.0000E+00	.0000E+00	.2706E-03	.5745E-06	-.1109E-04	.0000E+00
161	.0000E+00	.0000E+00	.3746E-03	.4831E-06	-.9149E-05	.0000E+00
162	.0000E+00	.0000E+00	.4425E-03	-.4660E-06	-.4515E-05	.0000E+00
163	.0000E+00	.0000E+00	.4477E-03	-.2297E-05	.2469E-05	.0000E+00

KAISER ENGINEERS HANFORD S/N:801854 03/28/95
PAGE 16 Run ID=TI77162 13:07:57

```
=============== I M A G E S  3 D ===============
= Copyright (c) 1984   Celestial Software Inc. =
================================================
```

SOLVE DISPLACEMENTS Version 2.0 07/01/90

L O A D C A S E 1

STIFFNESS AT NODE 94

Node	Translations X	Translations Y	Translations Z	Rotations X	Rotations Y	Rotations Z
164	.0000E+00	.0000E+00	.3861E-03	-.4115E-05	.9469E-05	.0000E+00
165	.0000E+00	.0000E+00	.2693E-03	-.5116E-05	.1451E-04	.0000E+00
166	.0000E+00	.0000E+00	.1459E-03	-.4744E-05	.1472E-04	.0000E+00
167	.0000E+00	.0000E+00	.5471E-04	-.4000E-05	.1057E-04	.0000E+00
168	.0000E+00	.0000E+00	.0000E+00	.0000E+00	.0000E+00	.0000E+00

Client: WHC
Subject: Sluice Pit AY-02E Analysis

Location: 241-AY-102 Tank

WO/Job No. W-320 /ER4319
Date: 8/3/95 By:
Checked: 8/9/95 By:
Revised: By:

10/21/96 2

8/9/95 1

ATTACHMENT 6

Revised, Encasement, Pipe, and Jumper Loads
4 pages including cover.

Pages 3a & 4a Added in Rev 2. | 2 10/21/96

ICF KAISER
HANFORD COMPANY

DESIGN ANALYSIS

Client	WESTINGHOUSE HANFORD CO.	WO/Job No.	ER4319	Calc. No.	W-320-27-014
Subject	PROJECT W-320 WASTE RETRIEVAL	Date	7/27/95	Revision No.	1
	ENCASEMENT PIPE STRESS ANALYSIS	Checked	8/8/95	Page No.	13 of 13
Location	C TANK FARM 200 EAST AREA	Revised		Filename	ANCH-LDS.XLS
				By	D. L. STONE
				By	CD Jones
				By	

ENCASEMENT PIPE ANCHOR LOADS AT PIT WALLS

Anchor Locations	Pipe Length 'L'	SEISMIC		THERMAL	
		Friction Force	Total Axial	Friction Force	Total Axial
		F1	LOAD = F1 x L	F2	LOAD = F2 x L
		(Ref. 4)		(Ref. 4)	
	(inches)	(lb/in)	(lb)	(lb/in)	(lb)
Pump Pit 241-C-06A Nozzle 17	(Ref. DWG # ES-320-M3) 206.88	24.48	5064	23.18	4795
Sluice Pit 241-C-06C Nozzle 6	(Ref. DWG # ES-320-M3) 201.48	24.48	4932	23.18	4670
Pump Pit 241-AY-02A Nozzle U 11	(Ref. DWG # ES-320-M6) 108	24.48	2644	23.18	2503
Sluice Pit 241-AY-02E Nozzle 2	(Ref. DWG # ES-320-M6) 120	24.48	2938	23.18	2782

ICF KAISER
HANFORD COMPANY

DESIGN ANALYSIS

Calc. No. W-320-27-013
Revision No. 1
Page No. 70 of 70

Client WESTINGHOUSE HANFORD CO.
Subject PROCESS PIPE STRESS ANALYSIS
PROJECT W-320 WASTE RETRIEVAL for TANK 241-C-106
Location C TANK FARM 200 EAST AREA

WO/Job No. ER4319
Date 8/4/1995
Checked 8/7/95
Revised

Filename ANCOR-SP.xls
By D. L. STONE
By CD Jones
By

ANCHOR LOADS AT PIT WALLS

Nozzle: 6 Location: 241-C-06C Sluice Pit	Pipe Loads	Pipe Length (*2) (in.)	Friction Force (*3) (lb/in)	Fx (lbs)	Fy (lbs)	Fz (lbs)	Mx (in-lb)	My (in-lb)	Mz (in-lb)
	Inner Pipe								
Identification: W-320 Supernate Line Nozzle	(Seismic)			264	0	207	0	5424	0
	(Thermal)			378	-45	30	288	-3456	432
	(*1)								
Node #: A00	Encasement								
Orientation:	(Seismic) (*4)	L = 201	F1 = 24.48	4932.23					
(Elevation View)	(Thermal) (*5)	L = 201	F2 = 23.18	4670.31					
	Absolute Sum			10245	45	237	288	8880	432

Nozzle: U-2 Location: 241-AY-02 ~~Pump~~ Sluice Pit	Pipe Loads	Pipe Length (*2) (in.)	Friction Force (*3) (lb/in)	Fx (lbs)	Fy (lbs)	Fz (lbs)	Mx (in-lb)	My (in-lb)	Mz (in-lb)
	Inner Pipe								
Identification: W-320 AY Supernate Line Nozzle	(Seismic)			0	0	0	0	0	0
	(Thermal)			-633	-67	964	-972	33396	-36
	(*1)								
Node #: A167	Encasement								
Orientation:	(Seismic) (*4)	L = 120	F1 = -24.48			-2937.60			
(Elevation View)	(Thermal) (*5)	L = 120	F2 = -23.18			-2781.60			
	Absolute Sum			633	67	6683	972	33396	36

(*1) (Ref. Appendix B, Autopipe Filename: TRAN-SP)
(*2) L = Length of pipe immediately preceding anchor as per DWGS # ES-320-M3 and # ES-320-M6: (Ref. Appendix D)
(*3) For underground pipe:
(For SEISMIC: Ref. Calculation W320-27-014, Appendix. AO, Page 5 , Soil Friction)
(For THERMAL: Ref. Calculation W320-27-014, Appendix. AP, Page 5 , Static Soil Friction)
(*4) LOAD=F1 x L
(*5) LOAD=F2 x L

ICF KAISER
HANFORD COMPANY

DESIGN ANALYSIS

Calc. No. W-320-27-013
Revision No. 2
Page No. 72 of 72

Client WESTINGHOUSE HANFORD CO.
Subject PROCESS PIPE STRESS ANALYSIS
PROJECT W-320 WASTE RETRIEVAL for TANK 241-C-106
Location C TANK FARM 200 EAST AREA

WO/Job No. ER4319
Date 9/3/1996
Checked 9/25/96
Revised

Filename ANCOR-SP.xls
By D. L. STONE DLS
By CDJones
By

ANCHOR LOADS AT PIT WALLS

Nozzle: 6 Location: 241-C-06C Sluice Pit	Pipe Loads	Pipe Length (*2) (in.)	Friction Force (*3) (lb/in)	Fx (lbs)	Fy (lbs)	Fz (lbs)	Mx (in-lb)	My (in-lb)	Mz (in-lb)
	Inner Pipe								
Identification: W-320 Supernate Line Nozzle	(Seismic)			264	0	207	0	5424	0
	(Thermal)			378	-45	30	288	-3456	432
	(*1)								
Node #: A00	Encasement								
	(Seismic) (*4)	L = 201	F1 = 24.48	4932.23					
Orientation: 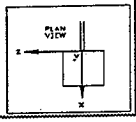	(Thermal) (*5)	L = 201	F2 = 23.18	4670.31					
	Absolute Sum			10245	45	237	288	8880	432

Nozzle: U-2 Location: 241-AY-02E Sluice Pit	Pipe Loads	Pipe Length (*2) (in.)	Friction Force (*3) (lb/in)	Fx (lbs)	Fy (lbs)	Fz (lbs)	Mx (in-lb)	My (in-lb)	Mz (in-lb)
	Inner Pipe								
Identification: W-320 AY Supernate Line Nozzle	(Seismic)			0	0	0	0	0	0
	(Thermal)			-633	-67	964	-972	33396	-36
	(*1)								
Node #: A167	Encasement								
	(Seismic) (*4)	L = 120	F1 = 24.48			2937.60			
Orientation: 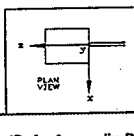	(Thermal) (*5)	L = 120	F2 = 23.18			2781.60			
	Absolute Sum			633	67	6683	972	33396	36

(*1) (Ref. Appendix B, Autopipe Filename: TRAN-SP)
(*2) L = Length of pipe immediately preceding anchor as per DWGS # ES-320-M3 and # ES-320-M6: (Ref. Appendix D)
(*3) For underground pipe:
(For SEISMIC: Ref. Calculation W320-27-014, Appendix. AO, Page 5 , Soil Friction)
(For THERMAL: Ref. Calculation W320-27-014, Appendix. AP, Page 5 , Static Soil Friction)
(*4) LOAD=F1 x L
(*5) LOAD=F2 x L

ICF KAISER
HANFORD COMPANY

DESIGN ANALYSIS

Calc. No.	W-320-27-029				
Revision No.	0				
Page No.	of				
Client	WESTINGHOUSE HANFORD CO.	WO/Job No.	ER4319	Filename	U2-A.xls
Subject	AY FARM JUMPER STRESS ANALYSIS	Date	8/4/95	By	RS ULBRICHT
PROJECT W-320 WASTE RETRIEVAL for TANK 241-C-106		Checked	8/7/95	By	
Location	C TANK FARM 200 EAST AREA	Revised		By	

ANCHOR LOADS AT PIT WALLS

(Inside Pit)	Jumper Loads			Fx (lbs)	Fy (lbs)	Fz (lbs)	Mx (in-lb)	My (in-lb)	Mz (in-lb)
Identification: Nozzle U2-A	(Seismic) (*1)			104	373	148	2280	1308	1032
Dwg. H-2-818503 Node #: B20 Orientation: (Plan View)	(Thermal) (*1)			116	1222	300	6912	1164	-1308
	Absolute Sum			220	1595	448	9192	2472	2340
Seismic Stabilizer	(Seismic) (*1)			701	0	542	0	0	0
Node #: D01 Dwg. H-2-818503	(Thermal) (*1)			412	0	-123	0	0	-36
	Absolute Sum			1113	0	665	0	0	36
Node #: E01 Dwg. H-2-818503	(Seismic) (*1)			457	3	711	36	0	24
	(Thermal) (*1)			-240	0	328	-144	0	-84
	Absolute Sum			697	3	1039	180	0	108

(*1) (Ref. Autopipe Calc. # W-320-27-029) Filename: AY02E-R1

U2-A.XLS8/4/95

ICF KAISER
HANFORD COMPANY

DESIGN ANALYSIS

Calc. No. W-320-27-029
Revision No: 0
Page No. 7 of 8

Client WESTINGHOUSE HANFORD CO.
Subject AY FARM JUMPER STRESS ANALYSIS
PROJECT W-320 WASTE RETRIEVAL for TANK 241-C-106
Location C TANK FARM 200 EAST AREA

WO/Job N ER4319
Date 9/1/95
Checked 9/11/95
Revised

Filename U2-A.xls
By M. M. AHMED
By M.K. Pal
By

Rev-1 By: M. Ahmed 7.12.96
Checked By: D Cistano 7-15-96

ANCHOR LOADS AT PIT WALLS

NOTE: THESE ARE THE JUMPER PIPING LOADS EXERTED ON PIT WALL FROM INSIDE THE PIT. DOES NOT INCLUDE THE TRANSFER . PIPE LINE LOADS FROM OUT SIDE THE PIT.

(Inside Pit) JUMPER LOADS		Fx (lbs)	Fy (lbs)	Fz (lbs)	Mx (in-lb)	My (in-lb)	Mz (in-lb)	
Identification: Jumper U2-A ECN #W-320-380 NOZZLE: U2	(Seismic) (*1)	102	86	124	1128	636	816	
AutoPipe File: MA-AY02E Node #: B12 Orientation: 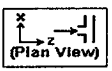	(Thermal) (*2)	125	863	158	5376	-768	-4656	Rev-1 LOADS
(*3) ABSOLUTE SUM		227	949	282	6504	1404	5472	

NOTES:

(*1): SEISMIC LOADS COULD BE POSITIVE OR NEGATIVE.

(*2): THERMAL LOADS SPECIFIED ARE THE ALGEBRIC SUM OF GRAVITY AND THERMAL LOADS.

(*3): ABSOLUTE SUM IS THE TOTAL OF THERMAL AND SEISMIC DISREGARDING THE SIGNS.

ICF KAISER
HANFORD COMPANY

Calc No. W320-27-029
Revision No. 0
Page No. 8 of 10

DESIGN ANALYSIS

Client WESTINGHOUSE HANFORD COMPANY
Subject AY FARM - JUMPER STRESS ANALYSIS
PROJECT W-320 WASTE RETRIEVAL for TANK 241-C-106
Location: C TANK FARM - 200 W.

WO/Job No. ER4319
Date 8/31/95
Checked 9/11/95
Revised

Filename: AY02E.WP
By: M.M. Ahmed
By: M. K. Pal
By:

Rev-2, By: M. Ahmed 4-12-97
Checked By:

PIT WALL ANCHOR LOADS I Rev-2

NOZZLE	ORIENTATION	LOAD CASES	LOADS (FORCES IN POUNDS & MOMENTS IN FT-LBS)						REF:
			Fx	Fy	Fz	Mx	My	Mz	
U-11 PUMP PIT AY-02A	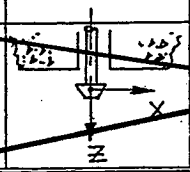	Thermal	63	390	52	183	20	35	AY02A1R2 A00
		Seismic	205	102	90	209	200	27	AY02A2R2 A00
		Total	268	492	142	392	220	62	
U-2 SLUICE PIT AY-02E	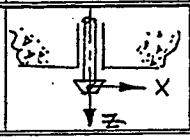	Thermal	125	865	157	449	63	387	AY02E-R2 B12
		Seismic	102	86	125	94	53	68	SAME
		Total	227	951	282	543	116	455	

Notes:

1. Seismic Loads could be positive or negative.
2. Thermal loads specified are the algebric sum of gravity and thermal loads.
3. Total loads specified are the absolute sum of thermal and seismic loads disregarding the signs.

W320-24-017

Pump Pit AY-02A Analysis and Cover Block Design

FLUOR DANIEL NORTHWEST
INTEROFFICE CORRESPONDENCE

To:	C. B. Organ	Date:	July 14, 1998
Location:	Richland, E6-28	Reference:	IOC-98-TWRS-040
From:	D. T. Chou DTC		
Location:	Richland, H5-57	Client:	Lockheed Martin Hanford Corporation
Telephone:	376-3123	Subject:	W-320 INDEPENDENT DESIGN VERIFICATION ON CALCULATION W-320-24-017, REV. 3, "PUMP PIT AY-02A ANALYSIS AND COVER BLOCK DESIGN"

c: S. K. Farnworth, E6-46
A. S. Langevin, S2-47
T. C. Oten, G3-12
Engineering Document Control, B4-57
LMHC Project Files, B4-57

References:
1. Structural calculation W-320-24-016, Rev. 2
2. Kaiser practice ES-7 (per TWRS Project Execution Plan, Attachment 3, use existing procedure for Project W-320)
3. Drawings H-2-818504 sheets 1 & 2

This memo, and the attached Design Verification Record, reports the design verification results for the above mentioned subject. The design verification used the "Design Review Method" as defined in Reference 2.

The revision involved the addition of one new jumper to the pit. The jumper connected to two existing nozzles at the walls. The Structural Engineer evaluated the overall integrity of the pit/walls for the loads. The Piping Engineer checked/designed the wall local effects from the piping loads, and the pipe anchors.

Were design inputs correctly selected? **Yes. They were the structures, and the loads, including piping loads.**

Were all necessary conditions considered in the design. **Yes**

Are required assumptions adequately described; are sources identified and reasonable for the design? **Yes. Loads from the buried pipe at nozzle U3 were estimated.**

Where necessary, are the assumptions reverified when the design is complete? **NA**

Was an appropriate design method used? **Yes**

Were design inputs correctly incorporated? **Yes**

Is design output reasonable compared to design input? **Yes**

Are necessary design inputs and verification for interfacing organizations specified in design documents or in supporting procedures or instructions? **Yes.**

DTC:sst

Attachment

Fluor Daniel Northwest	CALCULATION IDENTIFICATION AND INDEX	Page 1 of Date 4/2/98

This sheet shows the status and description of the attached Design Analysis sheets.

Discipline Civil/Structural WO/Job No. W-320 Calculation No. W320-24-017

Project No. & Name W320 Tank 241-C-106 Sluicing

Calculation Item Pump Pit AY-02A Analysis and Cover Block Design

These calculations apply to:

Dwg. No. H-2-818453 shts 1,2 &3 Rev. No.

Dwg. No. Rev. No.

Other (Study, CDR) Rev. No.

The status of these calculations is:

[] Preliminary Calculations

[X] Final Calculations

[] Check Calculations (On Calculation Dated)

[] Void Calculation (Reason Voided)

Incorporated in Final Drawings? [X] Yes [] No

This calculation verified by independent "check" calculations? [] Yes [X] No

Original and Revised Calculation Approvals:

	Rev. ~~0~~ 3 Signature/Date	Rev. ~~1~~ 4 Signature/Date	Rev. ~~2~~ 5 Signature/Date
Originator	A.S. Langevin 4/2/98 Ann Langevin		
Checked by	M.B. LASOTA 4/9/98		
Approved by	Ann Langevin 4/9/98		
Checked Against Approved Vendor Data	N/A		

INDEX

Design Analysis Page No.	Description
ia, ib	Index and Revision Descriptions

DESIGN VERIFICATION RECORD

Project/Document Number W320 TANK 241-C-106 SLUICING CALC W320-24-017, REV 3

Prepared By DAVID T CHOU (Print) : _____ (Print) : _____ (Print)

Verifier Name D. T. CHOU (Print) Initial DTC Date 7/14/98

Verifier Name _____ (Print) Initial _____ Date _____

Verifier Name _____ (Print) Initial _____ Date _____

Formal Design Verification is determined to be necessary per the Design Verification Screening Criteria and was performed by the following method(s).

1. Alternate Calculation Method YES (NO) (Circle One)
   Calculation Number _____ Revision _____
2. Testing Method YES (NO) (Circle One)
   Test Number _____ Revision _____
   Test Title _____
3. Identical Method YES (NO) (Circle One)
   Document Number _____ Revision _____
   Title _____ Date _____
4. Design Review Method (YES) NO (Circle One)
   Design Review Chairman D. T. CHOU
   Finding or Attached Memo Report Number SEE THE ATTACHED IOC OF 7-14-98 FROM D.T. CHOU TO C.B. ORGAN
   _____ Date _____

Formal design verification is complete and acceptable:

Design Verification Officer CB [signature] Date 7/16/98

ATTACH ALL DOCUMENTATION RELATED TO THE DESIGN VERIFICATION CONDUCTED.

KEH-1980.00 (06/91)

ICF Kaiser Hanford Company

INTEROFFICE MEMORANDUM

TO C. B. Organ E6-01
Design Verification Officer

DATE August 14, 1995

FROM G. L. Hopkins G3-17

COPIES TO R. W. Davidson S3-07
M. A. Haq G3-17
M. S. Ruben E6-46
Eng Doc Control G3-11

JOB NO. ER4319

SUBJECT REVISION OF STRUCTURAL ANALYSIS OF SLUICING PIT AY-02E

REFERENCES
1. Design Calculation Numbers W320-24-016 and -017, Rev. 1.0
2. InterOffice Memo to C. B. Organ from G. L. Hopkins, "Structural Analysis of Sluicing Pit AY-02E," dated March 31, 1995.

This memo and attached form KEH 1980.00 (16/91) are to perform a design verification of revised subject calculations. This design verification is in accordance with "Design Review Method" as defined by ICF Kaiser Hanford Company (ICF KH) Procedure ES 7, Rev. 3, Section 6.2.

Responses to the questions of Section 6.2.1.4 of Procedure ES 7 are as follows:

1) Were the design inputs correctly selected?

   YES This conclusion is based on the review of the original calculations.

2) Were all necessary conditions considered in the design?

   YES

3) Are required assumptions adequately described? Are sources identified reasonable for the design?

   YES

4) Was appropriate design method used?

   YES

5) Where necessary, are the assumptions reverified when the design is complete?

   YES

6) Were the design inputs correctly incorporated?

YES

7) Is the design output reasonable compared to the design input?

YES

8) Are necessary design input and verification requirements for interfacing organizations specified in design documents or in supporting procedures or instructions?

YES

9) Was the applicable Hanford Plant Standards (HPS) followed? If not, is documented approval included from DOE-RL?

YES SDC 4.1, Rev. 12 was followed.

DESIGN VERIFICATION RECORD

Project/Document Number W320 TANK SLUICING PIT AY-02E CALCS W320-24-016, 017 REV 1.0

Prepared By G.L. HOPKINS (Print) ; _____ (Print) ; _____ (Print)

Verifier Name G.L. HOPKINS (Print) Initial GLH Date 8-14-95

Verifier Name _____ (Print) Initial _____ Date _____

Verifier Name _____ (Print) Initial _____ Date _____

Formal Design Verification is determined to be necessary per the Design Verification Screening Criteria and was performed by the following method(s).

1. Alternate Calculation Method YES (NO) (Circle One)
   Calculation Number _____ Revision _____
2. Testing Method YES (NO) (Circle One)
   Test Number _____ Revision _____
   Test Title _____
3. Identical Method YES (NO) (Circle One)
   Document Number _____ Revision _____
   Title _____ Date _____
4. Design Review Method (YES) NO (Circle One)
   Design Review Chairman G.L. HOPKINS
   Finding or Attached Memo Report Number SEE ATTACHED TOM & F 8-14-95 FROM G.L. HOPKINS TO C.B. OTGAN.
   _____ Date _____

Formal design verification is complete and acceptable:

Design Verification Officer CB Ogan Date 8/14/95

ATTACH ALL DOCUMENTATION RI VERIFICATION CONDUCTED.

KEH-1980.00 (06/91)

FLUOR DANIEL NOTRHWEST INC	CALCULATION IDENTIFICATION AND INDEX	Page ~~i~~ 1a of iii Date: 03/08/1995

This sheet shows the status and description of the attached Design Analysis sheets.

Discipline *Civil/Structural* WO/Job No. *ER 4319/W320* Calculation No. *W320-24-017*

Project No. & Name *W320 Tank 241-C-106 Sluicing*

Calculation Item *Pump Pit AY-02A Analysis and Cover Block Design*

These calculations apply to:

Dwg. No. *H-2-818453 shts 1, 2 and 3.* Rev. No. *1/1/0*

Dwg. No. Rev. No.

Other (Study, CDR) N/A Rev. No. *N/A*

The status of these calculations is:

[] Preliminary Calculations

[X] Final Calculations

[] Check Calculations (On Calculation Dated)

[] Void Calculation (Reason Voided)

Incorporated in Final Drawings? [X] Yes [] No

This calculation verified by independent "check" calculations? [] Yes [X] No

Original and Revised Calculation Approvals:

	Rev. 0 Signature/Date	Rev. 1 Signature/Date	Rev. 2 Signature/Date
Originator	*John W. Funk 03/08/95*	*James R. Booth 8/8/95*	*Ronald W. Davidson 3/1/96* *Michael B. Lasota 3/19/97*
Checked by	*James R. Booth 3/8/95*	*Ronald W. Davidson 8/9/95*	*William J. Magruder 4/2/96* *Ronald W. Davidson 3/25/97*
Approved by	*Ronald W. Davidson 3/10/95*	*Ronald W. Davidson 8/9/95*	*Ronald W. Davidson 3/25/97*
Checked Against Approved Vendor Data			3/25/97

INDEX

Design Analysis Page No.	Description
1	*Objective, Criteria, Methods, References, Assumptions.*
2-5	*Weight of Cover Blocks and Pipe Loading.*
6	*Discussion, Conclusion.*
3 ~~*6a-6j*~~ *3a-3j*	*Weight and Analysis of New Center Cover Block.*
Attach 1	*Pipe Loads.*
Attach 2	*Revised Encasement, Pipe and Jumper Loads.*
Attach 3	*IOM - As-Found Condition of AY-02A Center Cover Block.*
3 Attach 4	Nozzle Loads from New Supernate Jumper
3 6a, 6b, 6c	New Supernate Jumper

KEH 0378.00 (06/92) KEF072 3202417.COV

FLUOR DANIEL NOTRHWEST INC	CALCULATION IDENTIFICATION AND INDEX Continuation Sheet	Page ii of iii Date 03/08/1995

Discipline *Civil/Structural* WO/Job No. *ER 4319/W320* Calculation No. *W320-24-017*

	Rev. 0 Signature/Date	Rev. 1 Signature/Date	Rev. 2 Signature/Date
Originator	*John W. Funk 03/08/95*	*James R. Booth 8/8/95*	*Ronald W. Davidson 3/1/96* *Michael B. Lasota 3/19/97*
Checked by	*James R. Booth 03/08/95*	*Ronald W. Davidson 8/9/95*	*William J. Magruder 4/2/96* *Ronald W. Davidson 3/25/97*

INDEX

Design Analysis Page No.	Description

REVISION

Revision No.	Description
0	*Initial issue*
1	*Added sheet 5a and Attachment 2.*
2	*Page 6 - Revised to expand Conclusion for existing cover block evaluation and changed piping loads. Attachment 3 - Added. Revised page 3, 4, 5 and 6, added pages 3a thru 3j - Design of the New Center Cover Block replacement, added pages 4a thru 4f - Evaluation of 3" Dia core drill. Added page 3b in Attachment 2.*
3	Added p. 6a, 6b & 6c, Added Attach 4 (6 pages)
	for analysis of loads due to New Supernate Jumper
	Revised p. 1

CALCULATION CROSS INDEX (Typical)

Subject Calculation No. W320 - 24-017

Subject Calculation Revision No.	Superceded by Calculation No.	These interfacing calculation/documents provide input to the subject calculation, and if revised may require revision of the subject calculation.		Results and conclusions of the subject calculation are used in these interfacing calculations and/or documents.		Does the output interface calculation/ documents require revision?		Has the output interface calculation/ documents been revised?		Discipline manager's signature and date indicating evaluation complete.
		Calculation/Document No.	Revision No.	Calculation/Document No.	Revision No.	Yes	No	Yes	No	
—	—	H-2-818453 Sht 1,2	0	H-2-818453 Sht 1,2	0		✓		✓	[illegible] 3/20/95
—	—	H-2-818453 Sht 1,2,3	1 - R2 2 - R2 3 - R1	H-2-818453 Sht 1,2,3	1 - R2 2 - R2 3 - R1		✓		✓	[illegible] 4/10/98

DESIGN VERIFICATION SCREENING CRITERIA

Project/Document No. Calc W320-24-017

When the design or design change affects hardware, formal design verification must be performed if one or more of the following questions must be answered affirmatively (YES).

YES	NO	
✓		1. Does the design or design change involved meet the established criteria to be considered Safety Class 1 or 2?
	✓	2. Does this design or design change cause or permit changes to Safety Class 1 or 2 instrument or alarm setpoints outside of previously approved operational limits?
	✓	3. Does this design or design change significantly affect the nuclear safety consequences of a malfunction or failure of the structure, system, or component?
	✓	4. Does this design or design change involve or change design that has previously undergone formal design verification?

Assigned Lead Engineer — Date: 3/10/95

Responsible Discipline Manager — Date: 3/10/95

Original Design Package Distribution:

- Project Manager
- Design Verification Officer
- Engineering Document Control

Design Change Distribution:

- Attach to Engineering Change Notice

KEH-1981.00 (06/91)

DESIGN VERIFICATION SCREENING CRITERIA

Project/Document No. Calculation W320-24-017, Rev 3

When the design or design change affects hardware, independent design verification must be performed if one or more of the following questions must be answered affirmatively (YES).

YES	NO	
✓		1. Does the design or design change involved meet the established criteria to be considered Safety Class?
	✓	2. Does this design or design change cause or permit changes to Safety Class instrument or alarm setpoints outside of previously approved operational limits?
	✓	3. Does this design or design change significantly affect the nuclear or environmental safety consequences of a malfunction or failure of the structure, system, or component?
	✓	4. Does this design or design change involve or change design that has previously undergone formal design verification?

Ann S. Langevin — Assigned Lead Engineer — 4/16/98 Date

J. Kaasnoot — Engineering Manager — 4/16/98 Date

Original Design Package Distribution:
- Project Manager
- Engineering Manager
- Technical Document Control

Design Change Distribution:
- Attach to Design Change Notice

A-6002-330 (04/97)

DESIGN ANALYSIS

Client: WHC
Subject: Pump Pit Ay-02A Analysis

Location: 241-AY-102 Tank

WO/Job No. W-320 /ER4319
Date: 03/08/95 By: JW FUNK
Checked: 3/8/95 By: JRB
Revised: 7/13/98 By: Ann A. Langerin

OBJECTIVE:

The purpose of this evaluation is to determine that the existing walls of 241-AY-102 Pump Pit are adequately designed to take the new pipe loads, jumper loads, seismic loads and also existing soil loads without affecting the structural integrity of the pit. This pit will be compared with the sluice pit in Calc. W320-24-016 which was determined to have the worst loading conditions.

CRITERIA:

The criteria for evaluation of pit walls is outlined in SDC 4.1 Rev 11. The existing walls will be analyzed as Safety Class 1 walls.

Functional Design Criteria(FDC) for Tank 241-C-106 Waste Retrival, Project W-320 Rev 2

METHODS:

MATHCAD 4.0 (A474) was used for load case calculations, modulus of elasticity calculations and evaluation of the pit walls.

REFERENCES:

1. Calculation W320-24-016
2. Dwgs H-2-64313 and H-2-64314
3. See piping calc W320-27-055 "Pit Wall Anchor Analysis" for design of the pipe anchorage to the wall. 3

ASSUMPTIONS:

1. Due to relatively small overall dimensions of the pit, and a thick (12") reinforced concrete walls, rigid response of the pit is assumed. As a consequence the ground acceleration is used as a seismic input.

CONCLUSION:

See page 6 of this calculation.

DESIGN ANALYSIS

Client: WHC
Subject: Pump Pit Cover Block Wt

Location: 241-AY-102 Tank

WO/Job No. W-320 /ER4319
Date: 03/08/95 By: JW FUNK
Checked: 3/8/95 By: JRB
Revised: By:

WEIGHT OF COVER BLOCKS

BLOCK1

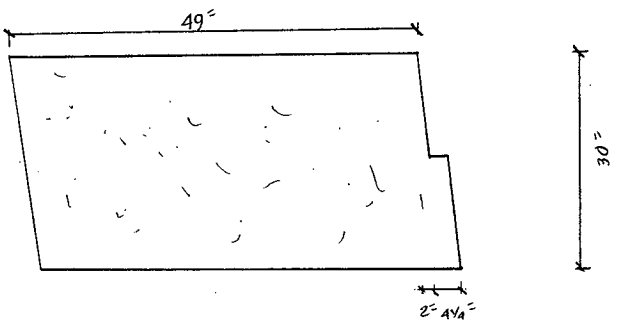

SAY CONCRETE WEIGHS 150 LBS PER CUBIC FOOT.

$$A_1 := \frac{55.25 \cdot 30 \cdot 108}{12^3}$$

$$A_1 = 103.59 \quad ft^3$$

$$WT_1 := A_1 \cdot 150$$

$$WT_1 = 15539.06 \quad lbs$$

Client: WHC
Subject: Pump Pit AY-02A Analysis and Cover Block Design.
Location: Tank 241-AY-102, Pump Pit.

WO/Job No.: ER4319/W320
Date: 5/15/1996 By: M.B. Lasota
Checked: By: R.W. Davidson
Revised: By:

WEIGHT OF CENTER COVER BLOCK, *the cover block consist of five distinct layers:*

For the reference, see the following sketches.

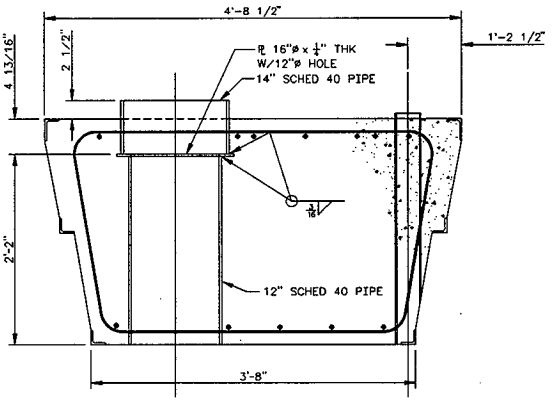

CENTER COVER BLOCK - SECTION LOOKING EAST

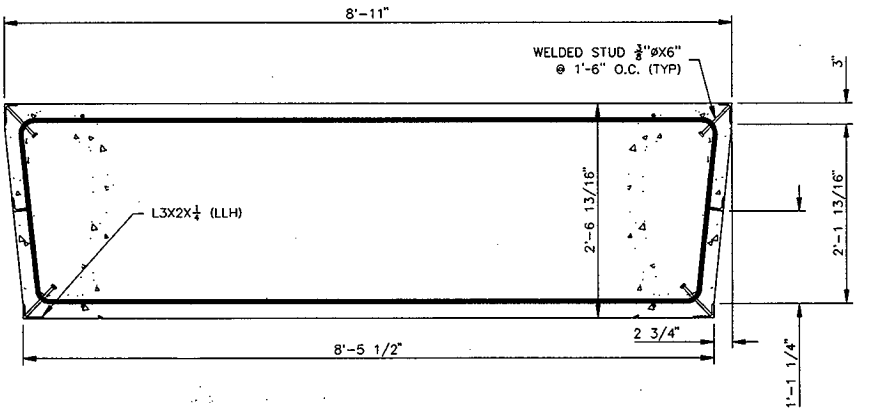

CENTER COVER BLOCK - SECTION LOOKING NORTH

MCAD6 FILE:W320017R3.MCD

Client: WHC
Subject: Pump Pit AY-02A Analysis and Cover Block Design.
Location: Tank 241-AY-102, Pump Pit.

WO/Job No.: ER4319/W320
Date:05/15/1996 By:M.B. Lasota
Checked: By: R.W. Davidson
Revised: By:

The following are parameters for each of five distinct layers.

$b_1 := 56.5 \cdot in$ $h_1 := 3 \cdot in$ $l_1 := 107 \cdot in$ $b_{2u} := 56.5 \cdot in$ $b_{2m} := 54.5 \cdot in$ $b_{2l} := 52.5 \cdot in$

$l_{2u} := 107 \cdot in$ $l_{2m} := 105.88 \cdot in$ $l_{2l} := 104.75 \cdot in$ $h_2 := 10.5675 \cdot in$ $b_{3u} := 48.5 \cdot in$ $d_{23} := 2 \cdot in$

$b_{3m} := 46.25 \cdot in$ $b_{3l} := 44 \cdot in$ $l_{3u} := 104.32 \cdot in$ $l_{3m} := 102.91 \cdot in$ $l_{3l} := 101.5 \cdot in$ $h_3 := 13.25 \cdot in$

$d_{3l} := 2 \cdot in$

Volume of the west cover block is:

$V_1 := b_1 \cdot l_1 \cdot h_1$ $V_1 = 10.496 \cdot ft^3$

$A_{2u} := b_{2u} \cdot l_{2u}$ $A_{2u} = 6045.500 \cdot in^2$

$A_{2m} := b_{2m} \cdot l_{2m}$ $A_{2m} = 5770.460 \cdot in^2$ $A_{2l} := b_{2l} \cdot l_{2l}$ $A_{2l} = 5499.375 \cdot in^2$

$$V_2 := \frac{h_2 \cdot (A_{2u} + 4 \cdot A_{2m} + A_{2l})}{6} \qquad V_2 = 35.293 \cdot ft^3$$

$$V_3 := b_{2l} \cdot d_{23} \cdot \frac{l_{2l} + l_{3u}}{2} \qquad V_3 = 6.352 \cdot ft^3$$

$A_{3u} := b_{3u} \cdot l_{3u}$ $A_{3u} = 5059.520 \cdot in^2$

$A_{3m} := b_{3m} \cdot l_{3m}$ $A_{3m} = 4759.587 \cdot in^2$ $A_{3l} := b_{3l} \cdot l_{3l}$ $A_{3l} = 4466.000 \cdot in^2$

$$V_4 := \frac{h_3 \cdot (A_{3u} + 4 \cdot A_{3m} + A_{3l})}{6} \qquad V_4 = 36.504 \cdot ft^3$$

$V_5 := b_{3l} \cdot l_{3l} \cdot d_{3l}$ $V_5 = 5.169 \cdot ft^3$

Gross volume of concrete cover block is:

$V_g := V_1 + V_2 + V_3 + V_4 + V_5$ $V_g = 93.813 \cdot ft^3$

Length of framing angles is:

$l_{2x2} := 2 \cdot (l_{3l} + b_{3l}) + 2 \cdot l_{2l}$ $l_{2x2} = 41.708 \cdot ft$ $A_{2x2} := 0.938 \cdot in^2$

$l_{3x2} := 2 \cdot (l_1 + b_1)$ $l_{3x2} = 27.250 \cdot ft$ $A_{3x2} := 1.19 \cdot in^2$

Volume of penetrations:
3" penetrations:

$h_{p3u} := 4.8125 \cdot in$ $od_{p3u} := 4.5 \cdot in$ $id_{p3u} := 4.026 \cdot in$

$h_{p3l} := 25.75 \cdot in$ $od_{p3l} := 3.5 \cdot in$ $id_{p3l} := 3.068 \cdot in$

$t_{p3} := 0.25 \cdot in$ $od_{p3} := 6 \cdot in$ $id_{p3} := 3.0625 \cdot in$

$V_{p3} := h_{p3u}\cdot\frac{\pi}{4}\cdot od_{p3u}^2 + h_{p3l}\cdot\frac{\pi}{4}\cdot od_{p3l}^2 + t_{p3}\cdot\frac{\pi}{4}\cdot od_{p3}^2$ $\quad V_{p3} = 0.192\cdot ft^3$

$V_{p3s} := h_{p3u}\cdot\frac{\pi}{4}\cdot\left(od_{p3u}^2 - id_{p3u}^2\right) + h_{p3l}\cdot\frac{\pi}{4}\cdot\left(od_{p3l}^2 - id_{p3l}^2\right) + t_{p3}\cdot\frac{\pi}{4}\cdot\left(od_{p3}^2 - id_{p3}^2\right)$

$V_{p3s} = 0.045\cdot ft^3$

12" penetration (valve port):

$h_{p12u} := 4.8125\cdot in \quad od_{p12u} := 14\cdot in \quad id_{p12u} := 13.124\cdot in$

$h_{p12l} := 25.75\cdot in \quad od_{p12l} := 12.75\cdot in \quad id_{p12l} := 11.938\cdot in$

$t_{p12} := 0.25\cdot in \quad od_{p12} := 16\cdot in \quad id_{p12} := 12\cdot in$

$V_{p12} := h_{p12u}\cdot\frac{\pi}{4}\cdot od_{p12u}^2 + h_{p12l}\cdot\frac{\pi}{4}\cdot od_{p12l}^2 + t_{p12}\cdot\frac{\pi}{4}\cdot od_{p12}^2$ $\quad V_{p12} = 2.360\cdot ft^3$

$V_{p12s} := h_{p12u}\cdot\frac{\pi}{4}\cdot\left(od_{p12u}^2 - id_{p12u}^2\right) + h_{p12l}\cdot\frac{\pi}{4}\cdot\left(od_{p12l}^2 - id_{p12l}^2\right) + t_{p12}\cdot\frac{\pi}{4}\cdot\left(od_{p12}^2 - id_{p12}^2\right)$

$V_{p12s} = 0.299\cdot ft^3$

12" matching penetration @ north side of cover block.
Volume of penetration in upper layer (3"):

$d_{l2u} := 4.25\cdot in \quad d_{l2l} := 2.25\cdot in$

$R_o := 8\cdot in \quad h_1 = 3.000\cdot in$

$A_{lo} := R_o^2\cdot acos\left(\frac{d_{l2u}}{R_o}\right) - d_{l2u}\cdot\sqrt{R_o^2 - d_{l2u}^2}$

$V_{1o} := \left(\pi\cdot R_o^2 - A_{lo}\right)\cdot h_1$ $\quad V_{1o} = 0.287\cdot ft^3$

$R_i := 7.5\cdot in$
$A_{li} := R_i^2\cdot acos\left(\frac{d_{l2u}}{R_i}\right) - d_{l2u}\cdot\sqrt{R_i^2 - d_{l2u}^2}$

$V_{1i} := \left(\pi\cdot R_i^2 - A_{li}\right)\cdot h_1$ $\quad V_{1i} = 0.258\cdot ft^3$

$V_{1s} := V_{1o} - V_{1i} \quad V_{1s} = 0.029\cdot ft^3$

The expression for the distance from the center of the penetration to the north surface of the cover block in the upper inclined area in terms of the depth is:

$d_{l2u} := 4.25\cdot in \quad d_{l2l} := 2.25\cdot in$

$y := 0\cdot in .. h_2$

$d(y) := d_{l2u} - \frac{d_{l2u} - d_{l2l}}{h_2}\cdot y \quad d(0\cdot in) = 4.250\cdot in \quad d(h_2) = 2.250\cdot in$

Client: WHC
Subject: Pump Pit AY-02A Analysis and Cover Block Design.
Location: Tank 241-AY-102, Pump Pit.

WO/Job No.: ER4319/W320
Date:05/15/1996 By:M.B. Lasota
Checked: By: R.W. Davidson
Revised: By:

The expression for the volume of the cylinder cut by the plane inclined with respect to cylinder vertical axis is as follow (16" sch 40 pipe):

$R_o := 8 \cdot in$

$$A(y) := R_o^2 \cdot acos\left(\frac{d(y)}{R_o}\right) - d(y) \cdot \sqrt{R_o^2 - d(y)^2}$$

$y_o := 0 \cdot in \qquad y_{l1} := 2.8125 \cdot in$

$$V_{2o} := \pi \cdot R_o^2 \cdot (y_{l1} - y_o) - \int_{y_o}^{y_{l1}} A(y)\, dy \qquad V_{2o} = 0.263 \cdot ft^3$$

$R_i := 7.5 \cdot in$

$$A(y) := R_i^2 \cdot acos\left(\frac{d(y)}{R_i}\right) - d(y) \cdot \sqrt{R_i^2 - d(y)^2}$$

$y_o := 0 \cdot in \qquad y_{l1} := 2.8125 \cdot in$

$$V_{2i} := \pi \cdot R_i^2 \cdot (y_{l1} - y_o) - \int_{y_o}^{y_{l1}} A(y)\, dy \qquad V_{2i} = 0.236 \cdot ft^3$$

$V_{2s} := V_{2o} - V_{2i} \qquad V_{2s} = 0.027 \cdot ft^3$

Volume of penetration in layer 3 (1/4"plate):

$R_{3o} := 9 \cdot in \qquad t_3 := 0.25 \cdot in \qquad y_3 := y_{l1} + 0.5 \cdot t_3 \qquad y_3 = 2.938 \cdot in$

$d_3 := d(y_3) \qquad d_3 = 3.694 \cdot in \qquad d_{l2u} := 4.25 \cdot in \qquad d_{l2l} := 2.25 \cdot in$

$$A_{3o} := R_{3o}^2 \cdot acos\left(\frac{d_3}{R_{3o}}\right) - d_3 \cdot \sqrt{R_{3o}^2 - d_3^2} \qquad A_{3o} = 62.659 \cdot in^2$$

$V_{3o} := \left(\pi \cdot R_{3o}^2 - A_{3o}\right) \cdot t_3 \qquad V_{3o} = 0.028 \cdot ft^3$

$R_{3i} := 6 \cdot in$

$$A_{3i} := R_{3i}^2 \cdot acos\left(\frac{d_3}{R_{3i}}\right) - d_3 \cdot \sqrt{R_{3i}^2 - d_3^2} \qquad A_{3i} = 15.206 \cdot in^2$$

$V_{3i} := \left(\pi \cdot R_{3i}^2 - A_{3i}\right) \cdot t_3 \qquad V_{3i} = 0.014 \cdot ft^3$

$V_{3s} := V_{3o} - V_{3i} \qquad V_{3s} = 0.014 \cdot ft^3$

The expression for the volume of the cylinder cut by the plane inclined with respect to cylinder vertical axis is as follows, layer 4 (12" std pipe):

$R_o := 6.375 \cdot in$

$$A(y) := R_o^2 \cdot acos\left(\frac{d(y)}{R_o}\right) - d(y) \cdot \sqrt{R_o^2 - d(y)^2}$$

$y_o := 3.0625 \cdot in \qquad y_{l1} := 10.5625 \cdot in$

$$V_{4o} := \pi \cdot R_o^2 \cdot (y_{l1} - y_o) - \int_{y_o}^{y_{l1}} A(y)\, dy \qquad V_{4o} = 0.434 \cdot ft^3$$

$R_i := 6 \cdot in$

$$A(y) := R_i^2 \cdot acos\left(\frac{d(y)}{R_i}\right) - d(y) \cdot \sqrt{R_i^2 - d(y)^2}$$

$y_o := 3.0625 \cdot in \qquad y_{l1} := 10.5625 \cdot in$

$$V_{4i} := \pi \cdot R_i^2 \cdot (y_{l1} - y_o) - \int_{y_o}^{y_{l1}} A(y)\, dy \qquad V_{4i} = 0.393 \cdot ft^3$$

$V_{4s} := V_{4o} - V_{4i} \qquad V_{4s} = 0.042 \cdot ft^3$

Volume of penetration in layer 5 (mid angle L2x2x1/4"):

$R_{5o} := 6.375 \cdot in \qquad t_5 := 2 \cdot in \qquad y_5 := h_2 \qquad y_5 = 10.568 \cdot in$

$d_5 := d(y_5) \qquad d_5 = 2.250 \cdot in$

$$A_{5o} := R_{5o}^2 \cdot acos\left(\frac{d_5}{R_{5o}}\right) - d_5 \cdot \sqrt{R_{5o}^2 - d_5^2} \qquad A_{5o} = 0.248 \cdot ft^2$$

$V_{5o} := \left(\pi \cdot R_{5o}^2 - A_{5o}\right) \cdot t_5 \qquad V_{5o} = 0.106 \cdot ft^3$

$R_{5i} := 6 \cdot in$

$$A_{5i} := R_{5i}^2 \cdot acos\left(\frac{d_5}{R_{5i}}\right) - d_5 \cdot \sqrt{R_{5i}^2 - d_5^2} \qquad A_{5i} = 0.210 \cdot ft^2$$

$V_{5i} := \left(\pi \cdot R_{5i}^2 - A_{5i}\right) \cdot t_5 \qquad V_{5i} = 0.096 \cdot ft^3$

$V_{5s} := V_{5o} - V_{5i} \qquad V_{5s} = 0.010 \cdot ft^3$

The expression for the distance from the center of the penetration to the north surface of the cover block in the lower inclined area in terms of the depth is:

$d_{u2u} := 0.25 \cdot in \qquad d_{u2l} := -2 \cdot in$

$y := 0 \cdot in .. h_3$

$d(y) := d_{u2u} - \frac{d_{u2u} - d_{u2l}}{h_3} \cdot y \qquad d(0 \cdot in) = 0.250 \cdot in \qquad d(h_3) = -2.000 \cdot in$

$root(d(y), y) = 1.472 \cdot in \qquad h_6 := root(d(y), y) \qquad h_6 = 1.472 \cdot in \qquad y_6 := h_6$

The expression for the volume of the cylinder cut by the plane inclined with respect to cylinder vertical axis is as follows layer 6 (12" std pipe):

$R_o := 6.375 \cdot in$

$A(y) := R_o^2 \cdot acos\left(\frac{d(y)}{R_o}\right) - d(y) \cdot \sqrt{R_o^2 - d(y)^2}$

$y_o := 0 \cdot in \qquad y_6 = 1.472 \cdot in$

$V_{6o} := \pi \cdot R_o^2 \cdot (y_6 - y_o) - \int_{y_o}^{y_6} A(y)\, dy \qquad V_{6o} = 0.056 \cdot ft^3$

$R_i := 6 \cdot in$

$A(y) := R_i^2 \cdot acos\left(\frac{d(y)}{R_i}\right) - d(y) \cdot \sqrt{R_i^2 - d(y)^2}$

$y_o := 0 \cdot in \qquad y_6 = 1.472 \cdot in$

$V_{6i} := \pi \cdot R_i^2 \cdot (y_6 - y_o) - \int_{y_o}^{y_6} A(y)\, dy \qquad V_{6i} = 0.049 \cdot ft^3$

$V_{6s} := V_{6o} - V_{6i} \qquad V_{6s} = 0.006 \cdot ft^3$

The expression for the volume of the cylinder cut by the plane inclined with respect to cylinder vertical axis is as follows layer 7 (12" std pipe):

$R_o := 6.375 \cdot in$

$A(y) := R_o^2 \cdot acos\left(\frac{d(y)}{R_o}\right) - d(y) \cdot \sqrt{R_o^2 - d(y)^2}$

$y_6 = 1.472 \cdot in \qquad y_7 := h_3 \qquad y_7 = 13.250 \cdot in$

$V_{7o} := \int_{y_6}^{y_7} A(y)\, dy \qquad V_{7o} = 0.521 \cdot ft^3$

$R_i := 6 \cdot in$

$$A(y) := R_i^2 \cdot acos\left(\frac{d(y)}{R_i}\right) - d(y) \cdot \sqrt{R_i^2 - d(y)^2}$$

$y_6 = 1.472 \cdot in \qquad y_7 := h_3 \qquad y_7 = 13.250 \cdot in$

$$V_{7i} := \int_{y_6}^{y_7} A(y)\, dy \qquad V_{7i} = 0.466 \cdot ft^3$$

$V_{7s} := V_{7o} - V_{7i} \qquad V_{7s} = 0.055 \cdot ft^3$

Volume of penetration in layer 8 (lower angle L2x2x1/4"):

$R_o := 6.375 \cdot in \qquad t_8 := 2 \cdot in$

$$A(y) := R_o^2 \cdot acos\left(\frac{d(y)}{R_o}\right) - d(y) \cdot \sqrt{R_o^2 - d(y)^2}$$

$A_{8o} := A(h_3) \qquad A_{8o} = 88.913 \cdot in^2$

$V_{8o} := A_{8o} \cdot t_8 \qquad V_{8o} = 0.103 \cdot ft^3$

$R_i := 6 \cdot in$

$$A(y) := R_i^2 \cdot acos\left(\frac{d(y)}{R_i}\right) - d(y) \cdot \sqrt{R_i^2 - d(y)^2}$$

$A_{8i} := A(h_3) \qquad A_{8i} = 80.097 \cdot in^2$

$V_{8i} := A_{8i} \cdot t_8 \qquad V_{8i} = 0.093 \cdot ft^3$

$V_{8s} := V_{8o} - V_{8i} \qquad V_{8s} = 0.010 \cdot ft^3$

Finally, for 12" matching penetration @ north side of cover block, volume of displaced concrete & the steel is.

$V_{cm12} := V_{1o} + V_{2o} + V_{3o} + V_{4o} + V_{5o} + V_{6o} + V_{7o} + V_{8o} \qquad V_{cm12} = 1.798 \cdot ft^3$

$V_{sm12} := V_{1s} + V_{2s} + V_{3s} + V_{4s} + V_{5s} + V_{6s} + V_{7s} + V_{8s} \qquad V_{sm12} = 0.193 \cdot ft^3$

Volume of the concrete for the cover block:

$V_c := V_g - 2 \cdot V_{p3} - V_{p12} - V_{cm12} - l_{2x2} \cdot A_{2x2} - l_{3x2} \cdot A_{3x2} \qquad V_c = 88.774 \cdot ft^3$

Volume of the steel for the cover block (other than rebar):

$V_s := 2 \cdot V_{p3s} + V_{p12s} + V_{sm12} + l_{2x2} \cdot A_{2x2} + l_{3x2} \cdot A_{3x2} \qquad V_s = 1.079 \cdot ft^3$

Client: WHC
Subject: Pump Pit AY-02A Analysis and Cover Block Design.
Location: Tank 241-AY-102, Pump Pit.

WO/Job No.: ER4319/W320
Date:05/15/1996 By:M.B. Lasota
Checked: By: R.W. Davidson
Revised: By:

The density of normal weight plain concrete is 150pcf. Increased by 8%, to account for reinforcement, yields:

$\gamma_{rc} := 1.08 \cdot 150 \cdot pcf \qquad \gamma_{rc} = 162.000 \cdot pcf$

The density of steel is 490pcf.

$\gamma_s := 490 \cdot pcf$

Total weight of concrete cover block. Not including penetration plug is:

$W_{ccb} := V_c \cdot \gamma_{rc} \qquad W_{ccb} = 14381 \cdot lbf$

Weight of the openings/penetrations and framing angles:

$W_{scb} := V_s \cdot \gamma_s \qquad W_{scb} = 528.706 \cdot lbf$

Weight of the concrete block is:

$W_{cb} := W_{ccb} + W_{scb} \qquad W_{cb} = 14910.163 \cdot lbf$

In further design use:

$W_{cb} := 15000 \cdot lbf$

Weight of the plugs.

Since there is no special geometric condition, the weight of the each individual plug should be approximately equal to that of the displaced concrete (the shielding properties are proportional to the material density).

<u>Location of the Center of Gravity of the Center Cover Block without plugs.</u>

x - is defined in N-S direction z - is defined in W-E direction
Origin of the coordinate system is located at north-west upper corner of the cover block. Penetrations are numbered as follows: 1 - matching 12"ϕ penetration, 2 - 12"ϕ valve port, 3 - 3"ϕ west penetration and 4 - 3"ϕ east penetration.

$x_1 := 4.25 \cdot in \qquad z_1 := 53.5 \cdot in \qquad x_2 := 17.5 \cdot in \qquad z_2 := 32.5 \cdot in \qquad x_3 := 35.75 \cdot in \qquad z_3 := 15.5 \cdot in$

$x_4 := 49.25 \cdot in \qquad z_4 := 41.5 \cdot in \qquad x_g := 28.25 \cdot in \qquad z_g := 53.5 \cdot in \qquad W_{cb1} := W_{ccb} + W_{scb}$

$W_{cb1} = 14910.163 \cdot lbf$

$$x_o := \frac{\left[V_g \cdot x_g - V_{cm12} \cdot x_1 - V_{p12} \cdot x_2 - V_{p3} \cdot (x_3 + x_4)\right] \cdot \gamma_{rc} + \left[V_{sm12} \cdot x_1 + V_{p12s} \cdot x_2 + V_{p3s} \cdot (x_3 + x_4)\right] \cdot \gamma_s}{(V_g - V_{cm12} - V_{p12} - V_{p3}) \cdot \gamma_{rc} + (V_{sm12} + V_{p12s} + V_{p3s}) \cdot \gamma_s}$$

$x_o = 28.707 \cdot in$

$$z_o := \frac{\left[V_g \cdot z_g - V_{cm12} \cdot z_1 - V_{p12} \cdot z_2 - V_{p3} \cdot (z_3 + z_4)\right] \cdot \gamma_{rc} + \left[V_{sm12} \cdot z_1 + V_{p12s} \cdot z_2 + V_{p3s} \cdot (z_3 + z_4)\right] \cdot \gamma_s}{(V_g - V_{cm12} - V_{p12} - V_{p3}) \cdot \gamma_{rc} + (V_{sm12} + V_{p12s} + V_{p3s}) \cdot \gamma_s}$$

$z_o = 53.833 \cdot in$

Client: WHC
Subject: Pump Pit AY-02A Analysis and Cover Block Design.
Location: Tank 241-AY-102, Pump Pit.

WO/Job No.: ER4319/W320
Date:05/15/1996 By:M.B. Lasota
Checked: By: R.W. Davidson
Revised: By:

Cover Block Design:

Dead Load:

Recall: $W_{cb} = 15.000 \cdot kips$ - weight of the cover block excluding plugs

$V_{cd} := 2 \cdot V_{p3} + V_{p12} + V_{cm12}$ - volume of displaced concrete at penetrations. $V_{cd} = 4.542 \cdot ft^3$

$W_{cb} + V_{cd} \cdot \gamma_{rc} = 15.736 \cdot kips$ - increased weight used for calculation of the uniformly distributed load.

$l_{3l} = 101.500 \cdot in$

$w_{d1} := \dfrac{W_{cb} + V_{cd} \cdot \gamma_{rc}}{l_{3l}}$ - Maximum weight per linear foot of cover block: $w_{d1} = 1.860 \cdot \dfrac{kips}{ft}$

Live Load:

$q_{ll} := 50 \cdot psf$ recall width of the top of cover block: $b_1 = 56.500 \cdot in$

$w_l := b_1 \cdot q_{ll}$ $w_l = 0.235 \cdot kips \cdot ft^{-1}$ Floor load is conservative since access on top of pit is restricted.

Seismic Load:

An equivalent static evaluation will be used in lieu of a dynamic analysis for a simplified and conservative approach. The lateral cover block load must be multiplied by 1.5 per reference 9. In the equivalent static evaluation the fundamental frequency is not calculated but is assumed to be such that response acceleration is the peak of the response spectrum.

$z := 0.47$

Response Spectrum Acceleration (Ref 1, pg 24, Table 6) @ 7% of Critical Damping (Conservative)

$F_{H1} := 1.5 \cdot z \cdot w_{d1}$

$F_{H1} = 1.312 \cdot \dfrac{kips}{ft}$

The vertical seismic load is 2/3 of the horizontal load(REF 1).

$w_{e1} := \dfrac{2}{3} \cdot F_{H1}$

$w_{e1} = 0.874 \cdot \dfrac{kips}{ft}$

Environmental Loads:

Ashfall and snow loading will be combined as stated in SDC 4.1, Rev. 11, page 8 and substituted for tornado loads as stated in the SDC and ACI 349, sec. 9.2.1, load case 5. By inspection, a wind blown object as described in SDC 4.1 will not penetrate the cover blocks.

Ashfall loading: $w_{ash} := 24 \cdot psf$

Snow loading: $w_{sn} := 20 \cdot psf$ recall width of the top of cover block: $b_1 = 56.500 \cdot in$

$w_a := (w_{ash} + w_{sn}) \cdot b_1$ $w_a = 0.207 \cdot \dfrac{kips}{ft}$ Combined distributed load from snow and ashfall.

Client: WHC
Subject: Pump Pit AY-02A Analysis and Cover Block Design.
Location: Tank 241-AY-102, Pump Pit.

WO/Job No.: ER4319/W320
Date:05/15/1996 By:M.B. Lasota
Checked: By: R.W. Davidson
Revised: By:

Combined Loading: The following load cases were determined to be valid load combinations from ACI 349, sec 9.2.1 which will be compared to determine the Ultimate Moment.

$w_1 := 1.4 \cdot w_{d1} + 1.7 \cdot w_l$ $\quad w_1 = 3.005 \cdot \frac{kips}{ft}$

$w_2 := 1.4 \cdot w_{d1} + 1.7 \cdot w_l$ $\quad w_2 = 3.005 \cdot \frac{kips}{ft}$

$w_3 := 1.4 \cdot w_{d1} + 1.7 \cdot w_l + 1.7 \cdot w_a$ $\quad w_3 = 3.357 \cdot \frac{kips}{ft}$

$w_4 := w_{d1} + w_l + w_{e1}$ $\quad w_4 = 2.970 \cdot \frac{kips}{ft}$

$w_5 := w_{d1} + w_l + w_a$ $\quad w_5 = 2.303 \cdot \frac{kips}{ft}$

$w_6 := w_{d1} + w_l$ $\quad w_6 = 2.096 \cdot \frac{kips}{ft}$

$w_7 := w_{d1} + w_l$ $\quad w_7 = 2.096 \cdot \frac{kips}{ft}$

$w_8 := w_{d1} + w_l + w_{e1}$ $\quad w_8 = 2.970 \cdot \frac{kips}{ft}$

$w_9 := 1.05 \cdot w_{d1} + 1.3 \cdot w_l$ $\quad w_9 = 2.259 \cdot \frac{kips}{ft}$

$w_{10} := 1.05 \cdot w_{d1} + 1.3 \cdot w_l$ $\quad w_{10} = 2.259 \cdot \frac{kips}{ft}$

$w_{11} := 1.05 \cdot w_{d1} + 1.3 \cdot w_l + 1.3 \cdot w_a$ $\quad w_{11} = 2.529 \cdot \frac{kips}{ft}$

Load combination 3 is a controling combination, hence ultimate moment can be computed using the following loads:

$w_3 = 3.357 \cdot \frac{kips}{ft}$

$L := l_{3l}$ $\quad L = 8.458 \cdot ft$ *- Length of the beam, see drawing ECN-W320-319, sh.7.*

$a := \frac{L}{2}$ $\quad a = 50.750 \cdot in$ *- Distance from East end of beam to critical section.*

$x := \frac{L}{2}$ $\quad x = 50.750 \cdot in$ *- location of the max Moment (V(x)=0)*

$$M_{umax} := \frac{w_3 \cdot x \cdot (L - x)}{2}$$

$M_{umax} = 30.021 \cdot kips \cdot ft$ *- maximum moment in the cover block.*

$M_u := M_{umax}$

$M_u = 30.021 \cdot ft \cdot kips$

Determine required flexural reinforcement:

$f_c := 4000 \cdot psi$ $\quad f_y := 60000 \cdot psi$

$h := 30.8125 \cdot in$ $\quad d := h - (1.5 \cdot in + 0.3125 \cdot in)$ Assume #5 bars.

$d = 29.000 \cdot in$

$b := 39.5 \cdot in$ Approximate width of beam

$F := \frac{b \cdot d^2}{12000} \cdot in^{-3}$ $\quad F = 2.768$

$K_n := \frac{M_u}{F} \cdot (ft \cdot kips)^{-1}$ $\quad K_n = 10.845$ Use $K_n := 175$ Ref ACI 340.1R-91, FLEXURE 2.2.

$a_n := 4.37$

$A_s := \frac{M_u}{d \cdot a_n} \cdot \frac{in^3}{ft \cdot kips}$ $\quad A_s = 0.237 \cdot in^2$ $\quad A_{smin} := \frac{4}{3} \cdot A_s$ $\quad A_{smin} = 0.316 \cdot in^2$ controls.

Check minimum steel required ref ACI 10.5

$A_{smin} := 0.0033 \cdot b \cdot d$ $\quad A_{smin} = 3.780 \cdot in^2$

<u>Use #5 bar @ 7 in for a steel area of 0.53 sq. inches /ft top and bottom of cover block.</u>

Determine shear reinforcement requirements due to shear at the critical section at the 12" penetration.

Determine shear and reinforcement requirements due to shear at a distance from the support equal to the depth of the beam.

$V_{ud} := \frac{w_3 \cdot L}{2} \cdot \frac{L - 2 \cdot d}{L}$ $\quad V_{ud} = 6.084 \cdot kips$

Allowable Shear: (consider least width of the cover block). $\quad b = 3.292 \cdot ft$

$V_c := 2 \cdot \sqrt{f_c \cdot psi} \cdot b \cdot d$ $\quad V_c = 144.896 \cdot kips$ $\quad \phi := 0.85$ $\quad V_n := \phi \cdot V_c$ $\quad V_n = 123.161 \cdot kips$

$0.5 \cdot V_n = 61.581 \cdot kips$

Since $V_{ud} < 0.5 \cdot V_n$ Design for shear reinforcement not required per ACI 349, Sec. 11.5.5.1.

Development Length: Development length for number 5 bars is 12 inches. Bars will be bent and overlapped in the proximity of penetration openings.

Conclusion.

Design of the cover block as shown on the ECN-W320- 319 is adequate.

Client: NHC
Subject: Pump Pit AY-02A Analysis and Cover Block Design.
Location: Tank 241-AY-102, Pump Pit.

WO/Job No.: ER4319/W320
Date:2/26/1997 By:M.B. Lasota
Checked: By: R.W. Davidson
Revised: By:

WEIGHT OF SOUTH COVER BLOCK, - the cover block consist of five distinct layers:

For the reference, see the following sketches:

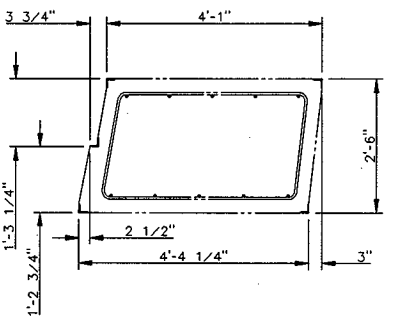

SOUTH COVER BLOCK - SECTION LOOKING EAST

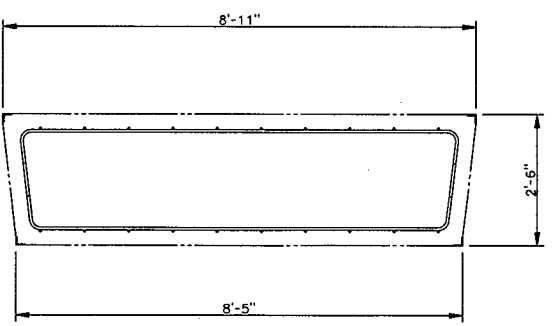

SOUTH COVER BLOCK - SECTION LOOKING NORTH

Let i denote a layer numbered in sequence from the top of the cover block.

b_{t_i} - *width of the top surface of the layer.*

b_{m_i} - *width of the middle surface of the layer.*

b_{b_i} - *width of the bottom surface of the layer.*

L_{t_i} - *length of the top surface of the layer.*

L_{m_i} - *length of the middle surface of the layer.*

L_{b_i} - *length of the bottom surface of the layer.*

h_i - *thickness of the layer.*

$i := 0, 1 .. 4$

$b_{t_i} :=$	$b_{m_i} :=$	$b_{b_i} :=$	$L_{t_i} :=$	$L_{m_i} :=$	$L_{b_i} :=$	$h_i :=$
49·in	49·in	49·in	107·in	107·in	107·in	2·in
49·in	49.35·in	49.7·in	107·in	105.7·in	104.4·in	11.25·in
49.7·in	49.59·in	49.47·in	104.4·in	104.17·in	103.94·in	2·in
51.22·in	51.74·in	52.25·in	103.94·in	102.47·in	101·in	12.75·in
52.25·in	52.25·in	52.25·in	101·in	101·in	101·in	2·in

$$V_i := \frac{h_i \cdot \left(b_{t_i} \cdot L_{t_i} + 4 \cdot b_{m_i} \cdot L_{m_i} + b_{b_i} \cdot L_{b_i}\right)}{6}$$

$$\frac{V}{ft^3} = \begin{bmatrix} 6.068 \\ 33.959 \\ 5.979 \\ 39.116 \\ 6.108 \end{bmatrix}$$

Gross volume of concrete cover block is:

$$V_g := \sum_i V_i \qquad V_g = 91.230 \cdot ft^3$$

Length of framing angles is:

$$l_{2x2} := 2 \cdot \left(b_{t_1} + L_{t_1} + b_{b_4} + L_{b_4}\right) + L_{m_3} \qquad l_{2x2} = 60.081 \cdot ft \qquad A_{2x2} := 0.938 \cdot in^2$$

Since there is no special geometric condition, the weight of the each individual plug should be approximately equal to that of the displaced concrete (the shielding properties are proportional to the material density).

Volume of the concrete for the cover block:

$V_c := V_g$ $\qquad V_c = 91.230 \cdot ft^3$

Volume of the steel for the cover block (other than rebar):

$V_s := l_{2x2} \cdot A_{2x2}$ $\qquad V_s = 0.391 \cdot ft^3$

Volume of the lead shielding on the top of the cover block:

$t_l := 0.75 \cdot in$ $\qquad V_l := b_{t_0} \cdot L_{t_0} \cdot t_l$ $\qquad V_l = 2.276 \cdot ft^3$

The density of normal weight plain concrete is 150pcf. Increased by 8%, to account for reinforcement, yields:

$\gamma_{rc} := 1.08 \cdot 150 \cdot pcf$ $\qquad \gamma_{rc} = 162.00 \cdot pcf$

The density of steel γ_s and lead γ_{pb} is:

$\gamma_s := 490 \cdot pcf$ $\qquad \gamma_{pb} := 0.4097 \cdot pci$ $\qquad \gamma_{pb} = 708 \cdot pcf$

Total weight of concrete cover block.

$W_{ccb} := V_c \cdot \gamma_{rc}$ $\qquad W_{ccb} = 14779 \cdot lbf$

Weight of the lead shielding and framing angles:

$W_{scb} := V_s \cdot \gamma_s + V_l \cdot \gamma_{pb}$ $\qquad W_{scb} = 1803 \cdot lbf$

Weight of the concrete block is:

$W_{cb} := W_{ccb} + W_{scb}$ $\qquad W_{cb} = 16582 \cdot lbf$

In further design use:

$W_{cb} := 17000 \cdot lbf$

Location of the Center of Gravity of the South Cover Block including plugs.

x - is defined in east direction y - is defined in north direction

Origin of the coordinate system is located at southwest upper corner of the cover block. Penetrations are numbered as follows: 1 - 4"ϕ existing penetration, 2 - 3"ϕ existing core drill, 3 - 3"ϕ new core drill.

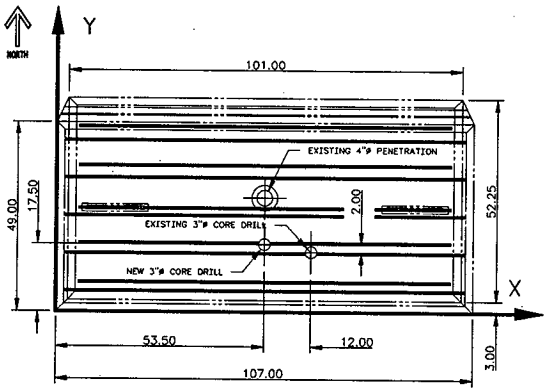

SOUTH COVER BLOCK - PLAN

$$x_l := \frac{L_{t_0}}{2} \qquad y_0 := \frac{b_{m_0}}{2} \qquad \Delta_1 := \frac{3\cdot in}{2.5\cdot ft - 2\cdot 2\cdot in}\cdot\frac{h_1}{2} \qquad \Delta_2 := \frac{3\cdot in}{2.5\cdot ft - 2\cdot 2\cdot in}\cdot\left(h_1 + \frac{h_2}{2}\right)$$

$$\Delta_3 := \frac{3\cdot in}{2.5\cdot ft - 2\cdot 2\cdot in}\cdot\left(h_1 + h_2 + \frac{h_3}{2}\right) \qquad \Delta_4 := \frac{3\cdot in}{2.5\cdot ft - 2\cdot 2\cdot in}\cdot\left(h_1 + h_2 + h_3\right)$$

$$y_1 := \frac{b_{m_1}}{2} + \Delta_1 \qquad y_2 := \frac{b_{m_2}}{2} + \Delta_2 \qquad y_3 := \frac{b_{m_3}}{2} + \Delta_3 \qquad y_4 := \frac{b_{m_4}}{2} + \Delta_4$$

$$\frac{y}{in} = \begin{bmatrix} 24.500 \\ 25.324 \\ 26.208 \\ 28.134 \\ 29.125 \end{bmatrix} \qquad \frac{x}{in} = \begin{bmatrix} 53.500 \\ 53.500 \\ 53.500 \\ 53.500 \\ 53.500 \end{bmatrix} \qquad x_o := \frac{\gamma_{rc}\cdot\sum_i V_i\cdot x_i + V_l\cdot x_0\cdot\gamma_{pb} + V_s\cdot x_0\cdot\gamma_s}{V_g\cdot\gamma_{rc} + V_l\cdot\gamma_{pb} + V_s\cdot\gamma_s}$$

$$y_o := \frac{\gamma_{rc}\cdot\sum_i V_i\cdot y_i + V_l\cdot y_0\cdot\gamma_{pb} + \left[2\cdot\left(b_{t_1} + L_{t_1}\right)\cdot y_0 + 2\cdot\left(b_{t_4} + L_{t_4}\right)\cdot\left(\frac{b_{m_4}}{2} + \Delta_4\right) + L_{m_3}\cdot y_3\right]\cdot\gamma_s\cdot A_{2x2}}{V_g\cdot\gamma_{rc} + V_l\cdot\gamma_{pb} + V_s\cdot\gamma_s}$$

$$x_o = 53.500\cdot in \qquad y_o = 26.567\cdot in$$

Client: NHC
Subject: Pump Pit AY-02A Analysis and Cover Block Design.
Location: Tank 241-AY-102, Pump Pit.

WO/Job No.: ER4319/W320
Date:2/28/1997 By:M.B. Lasota
Checked: By: R.W. Davidson
Revised: By:

Cover Block Design:

Dead Load:

Recall: $W_{cb} = 17.000 \cdot kips$ - weight of the cover block including plugs

$L_{t_0} = 107.00 \cdot in$

$w_{d1} := \frac{W_{cb}}{L_{t_0}}$ - Maximum weight per linear foot of cover block: $w_{d1} = 1.91 \cdot \frac{kips}{ft}$

Live Load:

$q_{ll} := 50 \cdot psf$ recall width of the top of cover block: $b_{b_0} = 49.00 \cdot in$

$w_l := b_{b_0} \cdot q_{ll}$ $w_l = 0.20 \cdot \frac{kips}{ft}$ Floor load is conservative since access on top of pit is restricted.

Seismic Load:

An equivalent static evaluation will be used in lieu of a dynamic analysis for a simplified and conservative approach. The lateral cover block load must be multiplied by 1.5 per reference 9. In the equivalent static evaluation the fundamental frequency is not calculated but is assumed to be such that response acceleration is the peak of the response spectrum.

$z := 0.47$ Response Spectrum Acceleration (Ref 1, pg 24, Table 6) @ 7% of Critical Damping (Conservative)

$F_{H1} := 1.5 \cdot z \cdot w_{d1}$

$F_{H1} = 1.344 \cdot \frac{kips}{ft}$

The vertical seismic load is 2/3 of the horizontal load (Ref 1).

$w_{e1} := \frac{2}{3} \cdot F_{H1}$

$w_{e1} = 0.896 \cdot \frac{kips}{ft}$

Environmental Loads:

Ashfall and snow loading will be combined as stated in SDC 4.1, Rev. 11, page 8 and substituted for tornado loads as stated in the SDC and ACI 349, sec. 9.2.1, load case 5. By inspection, a wind blown object as described in SDC 4.1 will not penetrate the cover blocks.

Ashfall loading: $w_{ash} := 24 \cdot psf$

Snow loading: $w_{sn} := 20 \cdot psf$ recall width of the top of cover block: $b_{b_0} = 49.00 \cdot in$

$w_a := (w_{ash} + w_{sn}) \cdot b_{b_0}$ $w_a = 0.18 \cdot \frac{kips}{ft}$. Combined distributed load from snow and ashfall.

Client: NHC
Subject: Pump Pit AY-02A Analysis and Cover Block Design.
Location: Tank 241-AY-102, Pump Pit.

WO/Job No.: ER4319/W320
Date:2/28/1997 By:M.B. Lasota
Checked: By: R.W. Davidson
Revised: By:

Combined Loading: The following load cases were determined to be valid load combinations from ACI 349, sec 9.2.1 which will be compared to determine the Ultimate Moment.

$w_1 := 1.4 \cdot w_{d1} + 1.7 \cdot w_l$ $\quad w_1 = 3.016 \cdot \frac{kips}{ft}$

$w_2 := 1.4 \cdot w_{d1} + 1.7 \cdot w_l$ $\quad w_2 = 3.016 \cdot \frac{kips}{ft}$

$w_3 := 1.4 \cdot w_{d1} + 1.7 \cdot w_l + 1.7 \cdot w_a$ $\quad w_3 = 3.322 \cdot \frac{kips}{ft}$

$w_4 := w_{d1} + w_l + w_{e1}$ $\quad w_4 = 3.007 \cdot \frac{kips}{ft}$

$w_5 := w_{d1} + w_l + w_a$ $\quad w_5 = 2.290 \cdot \frac{kips}{ft}$

$w_6 := w_{d1} + w_l$ $\quad w_6 = 2.111 \cdot \frac{kips}{ft}$

$w_7 := w_{d1} + w_l$ $\quad w_7 = 2.111 \cdot \frac{kips}{ft}$

$w_8 := w_{d1} + w_l + w_{e1}$ $\quad w_8 = 3.007 \cdot \frac{kips}{ft}$

$w_9 := 1.05 \cdot w_{d1} + 1.3 \cdot w_l$ $\quad w_9 = 2.267 \cdot \frac{kips}{ft}$

$w_{10} := 1.05 \cdot w_{d1} + 1.3 \cdot w_l$ $\quad w_{10} = 2.267 \cdot \frac{kips}{ft}$

$w_{11} := 1.05 \cdot w_{d1} + 1.3 \cdot w_l + 1.3 \cdot w_a$ $\quad w_{11} = 2.501 \cdot \frac{kips}{ft}$

Load combination 3 is a controlling combination, hence ultimate moment can be computed using the following loads:

$w_3 = 3.322 \cdot \frac{kips}{ft}$

$L := L_{b_4} - 2 \cdot 1 \cdot in \quad L = 8.250 \cdot ft$ — *Length of the beam, see plan.*

$x_o := \frac{L}{2} \quad x_o = 49.500 \cdot in$ — *Distance from East end of beam to critical section.*

$x := \frac{L}{2} \quad x = 49.500 \cdot in$ — *location of the max Moment (V(x)=0)*

$$M_{umax} := \frac{w_3 \cdot x \cdot (L - x)}{2}$$

$M_{umax} = 28.26 \cdot kips \cdot ft$ — *maximum moment in the cover block.*

$M_u := M_{umax}$

$M_u = 28.26 \cdot ft \cdot kips$

Client: NHC
Subject: Pump Pit AY-02A Analysis and Cover Block Design.
Location: Tank 241-AY-102, Pump Pit.

WO/Job No.: ER4319/W320
Date:3/03/1997 By:M.B. Lasota
Checked: By: R.W. Davidson
Revised: By:

Determine strength of the cover block:

Properties of the concrete and the reinforcing steel can be found on the drawing H-2-64322 rev. 3 and are:

Concrete 28 day strength is: $f'_c := 3000 \cdot psi$

ASTM A-15 intermediate grade billet steel, min. yield strength is: $f_y := 40000 \cdot psi$ $E_s := 29000 \cdot ksi$

Bar sizes: main bars - #5, stirrups - #4

$h := 30 \cdot in$ $d := h - (1.5 \cdot in + 0.5 \cdot in + 0.3125 \cdot in)$

$d = 27.688 \cdot in$

$b := b_{m_2}$ $b = 49.6 \cdot in$ Average width of beam

From the plan of the Cover Block it is quite clear that between existing and the new core drill the only one tension bar can be cut. Under those circumstances the nominal flexural strength of the cover block in flexure (neglecting compression reinforcement) is:

$A_s := 4 \cdot 0.31 \cdot in^2$ $A_s = 1.240 \cdot in^2$

Assuming steel yields when the nominal strength is reached:

$C(a) := 0.85 \cdot f'_c \cdot b \cdot a$

$T := A_s \cdot f_y$ $T = 49.60 \cdot kips$

Since from equilibrium: $C(a) := T$

$a := \frac{T}{0.85 \cdot f'_c \cdot b}$ $a = 0.392 \cdot in$

$\beta_1 := 0.85$ for f'_c=4000psi

The neutral axis position is

$x := \frac{a}{\beta_1}$ $x = 0.461 \cdot in$

The strain in the tension steel when the strain of 0.003 in the concrete is reached can be determined by straight line proportion.

$\varepsilon_s := \frac{d - x}{x} \cdot 0.003$ $\varepsilon_s = 0.177$

$\varepsilon_y := \frac{f_y}{E_s}$ $\varepsilon_y = 0.00138$

Since actual strain ε_s is much larger than the yield strain ε_y, it proves true the assumption that the steel yields before the nominal strength is reached, which indicates ductile condition.

$M_n := T \cdot \left(d - \frac{a}{2}\right)$ $M_n = 1363.6 \cdot in \cdot kips$

$\phi := 0.9$ $\frac{M_u}{\phi} = 376.8 \cdot in \cdot kips$ so $M_n \geq \frac{M_u}{\phi}$

Determine shear reinforcement requirements due to shear at the critical section.

Determine shear and reinforcement requirements due to shear at a distance from the support equal to the depth of the beam.

$V_{ud} := \frac{w_3 \cdot L}{2} \cdot \frac{L - 2 \cdot d}{L}$ $\qquad V_{ud} = 6.038 \cdot kips$

Allowable Shear: (consider least width of the cover block). $\qquad b = 49.6 \cdot in$

$V_c := 2 \cdot \sqrt{f'_c \cdot psi} \cdot b \cdot d \qquad V_c = 150.4 \cdot kips \qquad \phi := 0.85 \qquad V_n := \phi \cdot V_c \qquad V_n = 127.8 \cdot kips$

$0.5 \cdot V_n = 63.9 \cdot kips$

Since $V_{ud} < 0.5 \cdot V_n$ *Design for shear reinforcement not required per ACI 349, Sec. 11.5.5.1.*

Conclusion.

Design of the cover block with one tension and one compression bar cut is still adequate.

Client NHC
Subject Pump Pit AY-02A Analysis and Cover Block Design.
Location Tank 241-AY-102, Pump Pit

WO/Job No. W320/ER4319
Date: 3/18/1997 By: M.B. Lasota
Checked: By: R.W. Davidson
Revised: By:

U-11 OPERATING LOADS
241-AY-02A Pump Pit

	F_x lbf	F_y lbf	F_z lbf	M_x in-lbf	M_y in-lbf	M_z in-lbf	
Pipe rev. 0	223	59	425	780	3684	48	
Pipe rev. 1	236	46	452	480	1776	24	
Pipe rev. 2	305	78	536	1344	12720	108	
Encasement rev.0	0	0	2503	0	0	0	
Encasement rev. 1	0	0	2503	0	0	0	
Encasement rev. 2	0	0	3199	0	0	0	
Jumper rev. 0	1329	19	424	144	3540	9600	
Jumper rev. 1	1328	33	427	204	4812	9624	
Jumper rev. 2	63	390	52	2196	240	420	
Total rev. 0	1552	78	3352	924	7224	9648	
Total rev. 1	1564	79	3382	684	6588	9648	
Total rev. 2	368	468	3787	3540	12960	528	
Total des basis	765	929	4187	7440	29630	4680	ref calc W320-24-16 rev. ~~3~~ 2
Total rev0/des basis	2.03	0.08	0.80	0.12	0.24	2.06	
Total rev1/des basis	2.04	0.09	0.81	0.09	0.22	2.06	
Total rev2/des basis	0.48	0.50	0.90	0.48	0.44	0.11	

U-11 SEISMIC LOADS
241-AY-02A Pump Pit

	F_x lbf	F_y lbf	F_z lbf	M_x in-lbf	M_y in-lbf	M_z in-lbf	
Encasement rev. 0	0	0	2644	0	0	0	
Encasement rev. 1	0	0	2644	0	0	0	
Encasement rev. 2	0	0	3378	0	0	0	
Jumper rev. 0	19	19	13	84	48	168	
Jumper rev. 1	31	21	12	120	108	252	
Jumper rev. 2	205	102	90	2508	2400	324	
Total rev. 0	19	19	2657	84	48	168	
Total rev. 1	31	21	2656	120	108	252	
Total rev. 2	205	102	3468	2508	2400	324	
Total des basis	765	929	4187	7440	29630	4680	ref calc W320-24-16 rev. ~~3~~ 2
Total rev0/des basis	0.02	0.02	0.63	0.01	0.00	0.04	
Total rev1/des basis	0.04	0.02	0.63	0.02	0.00	0.05	
Total rev2/des basis	0.27	0.11	0.83	0.34	0.08	0.07	

DESIGN ANALYSIS

Client NHC

Subject Pump Pit AY-02A Analysis

Location 241-AY-102 Tank

WO/Job No.: W-320/ER4319

Date: 03/08/95 By: J.W. Funk

Checked: By: R.W. Davidson

Revised: 3/24/97 By: M.B. Lasota

DISCUSSION

The Sluice Pit and Pump Pit of AY-102 were both looked at to see which one had the worst loading conditions. It was determined that the Sluice Pit had the worst loading conditions and that it would be analyzed. The Pump Pit in this calculation will be compared with the Sluice Pit in Calculation W320-24-016 to show the structural adequacy of the Pump Pit.

Walls

The size, thickness and reinforcement of the walls in the Pump and Sluice Pit will be compared first. The walls in both pits are of the same thickness (12.0"). Reinforcement however in the pump pit is greater than that of the sluice pit. The pump pit has #5 at 12 in on center each way, where as the sluice pit has #5 at 12 in and #4 at 12 in for reinforcement (H-2-64313 and H-2-64314). The Pump Pit wall is also not as high 7.59 ft versus 8.96 ft for the Sluice Pit which reduces acting soil pressures on the walls. The length of the wall in the pump pit is 12' and the length of the wall in the sluice pit is 8'. this however is negligible and will be explained next with pipe and jumper loads.

Pipe and Jumper Loads

The length of the Pump Pit wall is negligible due to the loads on the Sluice Pit wall being considerably larger than the ones applied to the Pump Pit wall. The larger loads on the Sluice Pit wall will cause considerably higher stresses than the loads on the 12' wall in the Pump Pit. The U-2 loads can be seen in Attachment 1 and the U-11 loads can be seen on page 5 of this calculation, which has tables showing the loads in two groups operating this seismic. The loads acting on the south wall (U-2) of the Sluice Pit are greater than the loads acting on the west wall (U-11) of the Pump Pit in the most critical directions Fy, Fz, Mx and My.

CONCLUSION

The strength of the Pump Pit walls is adequate to carry all the additional loads from the piping, jumper and encasement when subject to an earthquake. This was determined by a comparison to the walls of the Sluice Pit. The Pump Pit walls are of the same thickness, reinforcement in the Pump Pit, however is greater than in the Sluice Pit indicating higher nominal strength. The depth of in the Pump Pit is smaller than the depth of Sluice Pit resulting in smaller internal forces. The preceding comparison suggests that the conclusions regarding seismic qualification of the Sluice Pit, contained in Calc W320-24-016 rev. 2, can be extrapolated on the Pump Pit. 2

Based on the revised Encasement, Pipe, and Jumper loads presented in Attachment 2, the above conclusion is still valid. 1

See Attachment 3 for an evaluation of AY-02A center cover block based on as-found condition. Evaluation recommends new center block be provided. Adjacent blocks should also be examined for similar problems.

Camera port locations an adjacent blocks should be adjusted to avoid cutting any rebar, if as-found condition found to be satisfactory. Analysis provided in Rev. 0 of this calculation for SC 1 pit walls envelopes any modifications provided by Rev. 1 & Rev. 2 of this calculation. No further anaysis of pit walls is required here. 2

Based on revised pipe and encasement loads shown on page 5 and Attachment 2, page 3a and 3b the above conclusion is still valid. 2

DISCUSSION - NEW SUPERNATE JUMPER

New Scope was added to project W-320 in October 1997 (Reference FDNW Engineering and Construction Statement of Work, Task Order N-09). Part of this new scope was the design of a new supernate jumper for pit AY-102-02A. This jumper is to be installed after the completion of project W-320. Results from the piping analysis for this jumper (calculation W320-27-053) are included in attachment 4. This new jumper ties into existing nozzles U-11 and U-3. These new loads will be compared to loads used in the previous analyses to show the structural adequacy of the Pump pit.

U-11 Nozzle Loads

The U-11 nozzle loads due to the new supernatant jumper (Attachment 4 page 2) are all less than the U-11 nozzle loads previously evaluated (Attachment 2 page 3b), so for the west pump pit wall the previous conclusion still holds.

U-3 Nozzle Loads

Project W-320 did not previously analyze loads on this nozzle. (The jumper provided by the project tying into nozzles U-8 and U-3 is a replacement of an existing jumper.) The new supernate jumper configuration must be evaluated for new loads on the south pit wall.

The load on the U-3 Nozzle originates from two sources. The first source, inside the pit wall, is a result of jumper reactions and is available from the piping analysis - Attachment 4 pages 4 and 5. The balance of the wall load comes from the second source ie. buried pipe within an encasement. Unfortunately, the loads from the second source were not derived. The only reasonable estimate of these loads are pipe and encasement loads at the U-11 nozzle. Configuration of the buried piping at both nozzles suggests lower thrust and bending moments at nozzle U-3. However, reactions in the direction parallel to the wall along with torsional moment are expected to be somewhat higher. From the behavior of the pit wall, as a plate in bending, reduction of the loads resulting in plate bending will improve the safety of the wall. The wall is less sensitive to a variation of the load resulting in plate membrane forces. Based on the preceding discussion, one can conclude that using buried pipe loads from U-11 in evaluation of nozzle U-3 is conservative.

The U-3 wall loads are evaluated in the table shown on page 6b. The loads are less than the design loads for the sluice pit.

U-3 Nozzle Loads (cont)
The south pump pit wall is the same width (8 ft) as the sluice pit wall analyzed in calc W320-24-016. The U-3 nozzle location (near center of wall) differs from the U-2 location (near wall edge) of the sluice pit analysis. This would tend to create higher end wall moments due to the nozzle axial load. In this case, however, the axial operational load of 428 lb is in a direction towards the wall, (See attachment 4) and therefore going opposite of the soil loadings. This makes the sluice pit analysis conservative in comparison. (The axial seismic load of 56 lb can act in either direction but is very small in comparison to all other loads. The other force directions and moments are all less than half the design basis values.)

CONCLUSION - NEW SUPERNATE JUMPER

The strength of the pump pit walls is adequate to carry the loads from the new supernate jumper.

Client NHC
Subject Pump Pit AY-02A Analysis and Cover Block Design.
Location Tank 241-AY-102, Pump Pit

WO/Job No. W320/ER4319
Date: 4/2/1998 By: A.S. Langevin
Checked: 4/9/98 By: [illegible]
Revised: By:

U-3 OPERATING LOADS
241-AY-02A Pump Pit

	F_x lbf	F_y lbf	F_z lbf	M_x in-lbf	M_y in-lbf	M_z in-lbf	
Pipe	305	78	536	1344	12720	108	see page 5.
Encasement	0	0	3199	0	0	0	
Jumper	43	137	428	354	15	31	
Total	348	215	4163	1698	12735	139	
Total des basis	765	929	4187	7440	29630	4680	ref calc W320-24-16 rev. 2
Total /des basis	0.45	0.23	0.99	0.23	0.43	0.03	

U-3 SEISMIC LOADS
241-AY-02A Pump Pit

	F_x lbf	F_y lbf	F_z lbf	M_x in-lbf	M_y in-lbf	M_z in-lbf	
Encasement	0	0	3378	0	0	0	see page 5.
Jumper	46	54	56	28	27	7	
Total	46	54	3434	28	27	7	
Total des basis	765	929	4187	7440	29630	4680	ref calc W320-24-16 rev. 2
Total/des basis	0.06	0.06	0.82	0.00	0.00	0.00	

Client: WHC
Subject: Pump Pit AY-02A Analysis

Location: 241-AY-102 Tank

WO/Job No. W-320 /ER4319
Date: 03/08/95 By: JW FUNK
Checked: 3/8/95 By: JRB
Revised: By:

ATTACHMENT 1

Pipe and Jumper Loads

3 pgs including this pg

ICF KAISER
HANFORD COMPANY

DESIGN ANALYSIS

Calc. No. W-320-27-029
Revision No. 0
Page No. of

Client WESTINGHOUSE HANFORD CO.
Subject AY FARM JUMPER STRESS ANALYSIS
PROJECT W-320 WASTE RETRIEVAL for TANK 241-C-106
Location C TANK FARM 200 EAST AREA

WO/Job No. ER4319
Date 2/22/95
Checked
Revised

Filename U11-A.xls
By D. L. STONE
By M. M. AHMED
By

ANCHOR LOADS AT PIT WALLS

Nozzle: U11 Location: 241-AY-02A Pump Pit	Pipe Loads	Pipe Length (*2) (in.)	Friction Force (*3) (lb/in)	Fx (lbs)	Fy (lbs)	Fz (lbs)	Mx (in-lb)	My (in-lb)	Mz (in-lb)
(Outside Pit)	Inner Pipe								
Identification: W-320 Slurry Transfer Line Nozzle	(Seismic)			0	0	0	0	0	0
	(Thermal)			-425	-59	-223	-48	-3684	-780
	(*1)								
Node #: A172	Encasement								
Orientation: (Plan View)	(Seismic) (*4)	L = 108	F1 = -24.48	-2644					
	(Thermal) (*5)	L = 108	F2 = -23.18	-2503					
	Absolute Sum			5572	59	223	48	3684	780

(Inside Pit)	Jumper Loads								
Identification: Jumper U11-A Dwg. H-2-818501	(Seismic)			19	19	13	84	48	168
	(Thermal)			-1329	-19	-424	144	-3540	-9600
Node #: A00	(*6)								
Orientation: (Plan View)	Absolute Sum			1348	38	437	228	3588	9768

(*1) (Ref. Autopipe Calc. # W-320-27-013)
(*2) Length of pipe immediately preceding anchor . (Ref. DWG # ES-320-M07)
(*3) For underground pipe. (Ref. STAB Calc. # W-320-27-014)
(*4) LOAD = F1 x L
(*5) LOAD = F2 x L
(*6) (Ref. Autopipe Calc. # W-320-27-029) Filename: AY02A-J2

ICF KAISER HANFORD

Calc. No. W320-24-016
Revision 0
Page No. 5 of 17

DESIGN ANALYSIS

Client: WHC
Subject: Sluice Pit AY-02E Analysis

Location: 241-AY-102 Tank

WO/Job No. W-320 /ER4319
Date: 02/22/95 By: JW FUNK
Checked: 3/8/95 By: JRB
Revised: By:

U-2 OPERATING LOADS
241-AY-02E Sluice Pit

	Fx lb	Fy lb	Fz lb	Mx in-lb	My in-lb	Mz in-lb
Pipe	499	77	859	1284	28656	60
Encasement			2782			
Jumper	266	852	208	6156	972	4620
TOTAL	765	929	3849	7440	29628	4680

U-2 SEISMIC LOADS
241-AY-02E Sluice Pit

	Fx lb	Fy lb	Fz lb	Mx in-lb	My in-lb	Mz in-lb
Encasement			2938			
Jumper	756	973	1249	6072	7320	5556
TOTAL	756	973	4187	6072	7320	5556

Client: WHC
Subject: Pump Pit AY-02A Analysis

Location: 241-AY-102 Tank

WO/Job No. W-320 /ER4319
Date: 8/3/95 By: JR Booth
Checked: 8/9/95 By:
Revised: 10/24/96 By:

1 8/9/95

ATTACHMENT 2

Revised Encasement, Pipe and Jumper Loads

4 pgs including this pg

Page 3a Added.

2 10/24/96

ICF KAISER
HANFORD COMPANY

DESIGN ANALYSIS

Calc. No.	W-320-27-014				
Revision No.	1				
Page No.	13 of 13				
Client	WESTINGHOUSE HANFORD CO.	WO/Job No.	ER4319	Filename	ANCH-LDS.XLS
Subject	PROJECT W-320 WASTE RETRIEVAL ENCASEMENT PIPE STRESS ANALYSIS	Date	7/27/95	By	D. L. STONE
		Checked	8/8/95	By	CD Jones
Location	C TANK FARM 200 EAST AREA	Revised		By	

ENCASEMENT PIPE ANCHOR LOADS AT PIT WALLS

Anchor Locations	Pipe Length 'L'	SEISMIC		THERMAL	
		Friction Force F1	Total Axial LOAD = F1 x L	Friction Force F2	Total Axial LOAD = F2 x L
		(Ref. 4)		(Ref. 4)	
	(inches)	(lb/in)	(lb)	(lb/in)	(lb)
Pump Pit 241-C-06A Nozzle 17	(Ref. DWG # ES-320-M3) 206.88	24.48	5064	23.18	4795
Sluice Pit 241-C-06C Nozzle 6	(Ref. DWG # ES-320-M3) 201.48	24.48	4932	23.18	4670
Pump Pit 241-AY-02A Nozzle U 11	(Ref. DWG # ES-320-M6) 108	24.48	2644	23.18	2503
Sluice Pit 241-AY-02E Nozzle 2	(Ref. DWG # ES-320-M6) 120	24.48	2938	23.18	2782

ICF KAISER
HANFORD COMPANY

DESIGN ANALYSIS

Calc. No. W-320-27-013
Revision No. 1
Page No. 69 of 70

Client WESTINGHOUSE HANFORD CO.
Subject PROCESS PIPE STRESS ANALYSIS
PROJECT W-320 WASTE RETRIEVAL for TANK 241-C-106
Location C TANK FARM 200 EAST AREA

WO/Job No. ER4319
Date 8/4/1995
Checked 8/7/95
Revised

Filename ANCOR-SL.xls
By D. L. STONE
By CD Jones
By

ANCHOR LOADS AT PIT WALLS

Nozzle: 17 Location: 241-C-06A Pump Pit	Pipe Loads	Pipe Length (*2) (in.)	Friction Force (*3) (lb/in)	Fx (lbs)	Fy (lbs)	Fz (lbs)	Mx (in-lb)	My (in-lb)	Mz (in-lb)
	Inner Pipe								
Identification: W-320 Pump Pit Slurry Line Nozzle	(Seismic)			63	0	72	0	2004	0
	(Thermal)			986	142	-545	2412	-15252	-4848
	(*1)								
Node #: A00	Encasement								
	(Seismic) (*4)	L = 207	F1 = 24.48	5064.42					
Orientation: (Elevation View)	(Thermal) (*5)	L = 207	F2 = 23.18	4795.48					
	Absolute Sum			10909	142	617	2412	17256	4848

Nozzle: U-11 Location: 241-AY-02A Pump Pit	Pipe Loads	Pipe Length (*2) (in.)	Friction Force (*3) (lb/in)	Fx (lbs)	Fy (lbs)	Fz (lbs)	Mx (in-lb)	My (in-lb)	Mz (in-lb)
	Inner Pipe								
Identification: W-320 AY Slurry Line Nozzle	(Seismic)			0	0	0	0	0	0
	(Thermal)			-452	-46	236	-24	-1776	-480
	(*1)								
Node #: A171	Encasement								
	(Seismic) (*4)	L = 108	F1 = -24.48	-2643.84					
Orientation: (Elevation View)	(Thermal) (*5)	L = 108	F2 = -23.18	-2503.44					
	Absolute Sum			5599	46	236	24	1776	480

(*1) (Ref. Appendix A, Autopipe Filename: TRAN-SL)
(*2) L = Length of pipe immediately preceding anchor as per DWGS # ES-320-M3 and # ES-320-M6: (Ref. Appendix D)
(*3) For underground pipe:
(For SEISMIC: Ref. Calculation W320-27-014, Appendix. A, Page 5 , Soil Friction)
(For THERMAL: Ref. Calculation W320-27-014, Appendix. B, Page 5 , Static Soil Friction)
(*4) LOAD = F1 x L
(*5) LOAD = F2 x L

ICF KAISER
HANFORD COMPANY

DESIGN ANALYSIS

Calc. No. W-320-27-013
Revision No. 2
Page No. 71 of 72

Client WESTINGHOUSE HANFORD CO.
Subject PROCESS PIPE STRESS ANALYSIS
PROJECT W-320 WASTE RETRIEVAL for TANK 241-C-106
Location C TANK FARM 200 EAST AREA

WO/Job No. ER4319
Date 9/3/1996
Checked 9/25/96
Revised

Filename ANCOR-SL.xls
By D. L. STONE DLS
By
By

ANCHOR LOADS AT PIT WALLS

Nozzle: 17 Location: 241-C-06A Pump Pit	Pipe Loads	Pipe Length (*2) (in.)	Friction Force (*3) (lb/in)	Fx (lbs)	Fy (lbs)	Fz (lbs)	Mx (in-lb)	My (in-lb)	Mz (in-lb)
	Inner Pipe								
Identification: W-320 Pump Pit Slurry Line Nozzle	(Seismic)			57	0	74	0	876	0
	(Thermal)			990	156	-564	2676	-15804	-5244
	(*1)								
Node #: A00	Encasement								
	(Seismic) (*4)	L = 217	F1 = 24.48	5305.31					
Orientation: 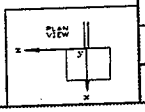	(Thermal) (*5)	L = 217	F2 = 23.18	5023.57					
	Absolute Sum			11376	156	638	2676	16680	5244

Nozzle: U-11 Location: 241-AY-02A Pump Pit	Pipe Loads	Pipe Length (*2) (in.)	Friction Force (*3) (lb/in)	Fx (lbs)	Fy (lbs)	Fz (lbs)	Mx (in-lb)	My (in-lb)	Mz (in-lb)
	Inner Pipe								
Identification: W-320 AY Slurry Line Nozzle	(Seismic)			0	0	0	0	0	0
	(Thermal)			-536	-78	305	-108	-12720	-1344
	(*1)								
Node #: A171	Encasement								
	(Seismic) (*4)	L = 138	F1 = -24.48	-3378.24					
Orientation: 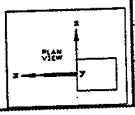	(Thermal) (*5)	L = 138	F2 = -23.18	-3198.84					
	Absolute Sum			7113	78	305	108	12720	1344

(*1) (Ref. Appendix A, Autopipe Filename: TRAN-SL)
(*2) L = Length of pipe immediately preceding anchor as per DWGS # ES-320-M3 and # ES-320-M6: (Ref. Appendix D)
(*3) For underground pipe:
(For SEISMIC: Ref. Calculation W320-27-014, Appendix. A, Page 5 , Soil Friction)
(For THERMAL: Ref. Calculation W320-27-014, Appendix. B, Page 5 , Static Soil Friction)
(*4) LOAD=F1 x L
(*5) LOAD=F2 x L

ANCOR-SL.XLS9/6/96

ICF KAISER
HANFORD COMPANY

Calc No. W320-27-029
Revision No. 0
Page No. 8 of 10

DESIGN ANALYSIS

Client WESTINGHOUSE HANFORD COMPANY
Subject AY FARM - JUMPER STRESS ANALYSIS
PROJECT W-320 WASTE RETRIEVAL for TANK 241-C-106
Location: C TANK FARM - 200 W.

WO/Job No. ER4319
Date 8/31/95
Checked 9/11/95
Revised

Filename: AY02E.WP
By: M.M. Ahmed
By: M. K. Pal
By:

Rev-2, By: M. Ahmed 4-12-97
Checked By:

PIT WALL ANCHOR LOADS I Rev-2

NOZZLE	ORIENTATION	LOAD CASES	LOADS (FORCES IN POUNDS & MOMENTS IN FT-LBS)						REF:
			Fx	Fy	Fz	Mx	My	Mz	
U-11 PUMP PIT AY-02A	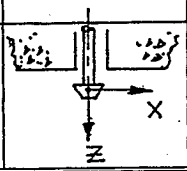	Thermal	63	390	52	183	20	35	AY02A1R2 A00
		Seismic	205	102	90	209	200	27	AY02A2R2 A00
		Total	268	492	142	392	220	62	
~~U-2 SLUICE PIT AY-02E~~	~~ 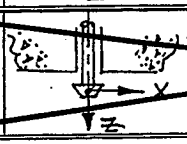 ~~	~~Thermal~~	~~125~~	~~865~~	~~157~~	~~449~~	~~63~~	~~387~~	~~AY02E-R2 B12~~
		~~Seismic~~	~~102~~	~~86~~	~~125~~	~~94~~	~~53~~	~~68~~	~~SAME~~
		~~Total~~	~~227~~	~~951~~	~~282~~	~~543~~	~~116~~	~~455~~	

Notes:

1. Seismic Loads could be positive or negative.
2. Thermal loads specified are the algebric sum of gravity and thermal loads.
3. Total loads specified are the absolute sum of thermal and seismic loads disregarding the signs.

ICF KAISER
HANFORD COMPANY

DESIGN ANALYSIS

Calc. No. W-320-27-029
Revision No. 0
Page No. of

Client WESTINGHOUSE HANFORD CO.
Subject AY FARM JUMPER STRESS ANALYSIS
PROJECT W-320 WASTE RETRIEVAL for TANK 241-C-106
Location C TANK FARM 200 EAST AREA

WO/Job No. ER4319
Date 8/4/95
Checked
Revised

Filename U11-A.xls
By RS Ulbricht
By DL Dove
By

ANCHOR LOADS AT PIT WALLS

(Inside Pit)	Jumper Loads			Fx (lbs)	Fy (lbs)	Fz (lbs)	Mx (in-lb)	My (in-lb)	Mz (in-lb)
Identification: Jumper U11-A	(Seismic) (*1)			31	21	12	120	108	252
Dwg. H-2-818501	(Thermal) (*1)			1328	-33	427	-204	-4812	-9624
Node #: A00									
Orientation: (Plan View)	Absolute Sum			1359	54	439	324	4920	9876

(*1) (Ref. Autopipe Calc. # W-320-27-029) Filename: JUMPER

U11-A.XLS8/4/95

TO James T. Lilly, PM

DATE 03-04-96

FROM Ronald W. Davidson, LE

COPIES TO Danny L. Evans, PLE

JOB NO. W-320

SUBJECT AS-FOUND CONDITION OF EXISTING AY-02A CENTER COVER BLOCK

The center cover block is a one-way 2'-6" thick slab with main reinforcement (#5 bars @ 12" O/C, T & B) longitudinally and transverse ties (#4 bars at 12" O/C, T & B). Rebar specified is 40,000 ksi and concrete 28 day strength, 3000 psi. Project B-131, provided core drills through the center block altering the structural integrity of block considerably. Two of the four bottom main tension face rebars have been confirmed to have been cut as well as both longitudinal edge angles. The bottom face has been scanned, visually inspected and video-taped and several transverse tension cracks are visible as well as major deterioration of concrete surfaces at core drill locations and corners.
A lead top plate (3/4" thick) was installed by Project B-220 on the top surface of the center and adjacent cover blocks.

The W-320 Project needs to provide (1) additional core drill through the center block for a valve port. It has been confirmed through scanning that at least one additional main and transverse bar will be cut. Only, (1) main tension face rebar will remain intact, with continuity along bottom north face of the cover block. Due to the lack of continuity of main flexure reinforcement at critical sections, the center block is essentially a plain concrete member containing less reinforcement than the minimum amount required by the code for flexure strength. In accordance with ACI 349, 12.10, flexure reinforcement shall not be terminated in a tension zone unless continuing reinforcement provides double the area for flexure. The member cannot be designed per ACI 318.1 as a plain concrete member, because of the limitations on the use of plain concrete as a structural member that is not continuously supported. See UBC-1994 Section 1923.
Additionally, the cracking along the bottom face of the center block runs transversely entirely across the width of the bottom surface of the cover block approximately mid-span, extending along both sides of the block. The cracks appear to be excessively wide, well beyond tolerable limits set by ACI 224R to limit flexure cracking of reinforced concrete members, indicating loss or near loss of cover block structural integrity.

I strongly recommend that a new center block be constructed as a safety class 3/1 item and that the adjacent blocks be examined as well, for similar deterioration. Further, it is apparent that further maneuvers/lifting of the center cover block using lifting bails may cause catastrophic failure.

ATTACHMENT 4

Loads due to New Supernate Jumper

6 pages including this page

DESIGN ANALYSIS

Client: Numatec
Subject: New Supernate Jumper Analysis
Location: 241-AY

WO/Job No.: ER4319/W-320
Date: 1/12/98 By: Kelly Hayase
Checked: 1/20/98 By: K Cleveland
Revised: By:

Table 3: Total Nozzle/Wall Anchor Loads

Node	Orientation	Fx lb	Fy lb	Fz lb	Mx ft·lb	My ft·lb	Mz ft·lb
A00	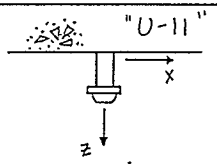	58	289	76	258	19	8
B09	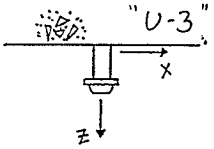	89	192	485	381	42	37

FLUOR DANIEL NORTHWEST INC.

Calc. No.: W320-27-053
Revision: 0
Page No.: 6 of 15

DESIGN ANALYSIS

Client: Numatec
Subject: New Supernate Jumper Analysis
Location: 241-AY

WO/Job No.: ER4319/W-320
Date: 1/12/98 By: Kelly Hayase
Checked: 1/20/98 By: K. Cleveland
Revised: By:

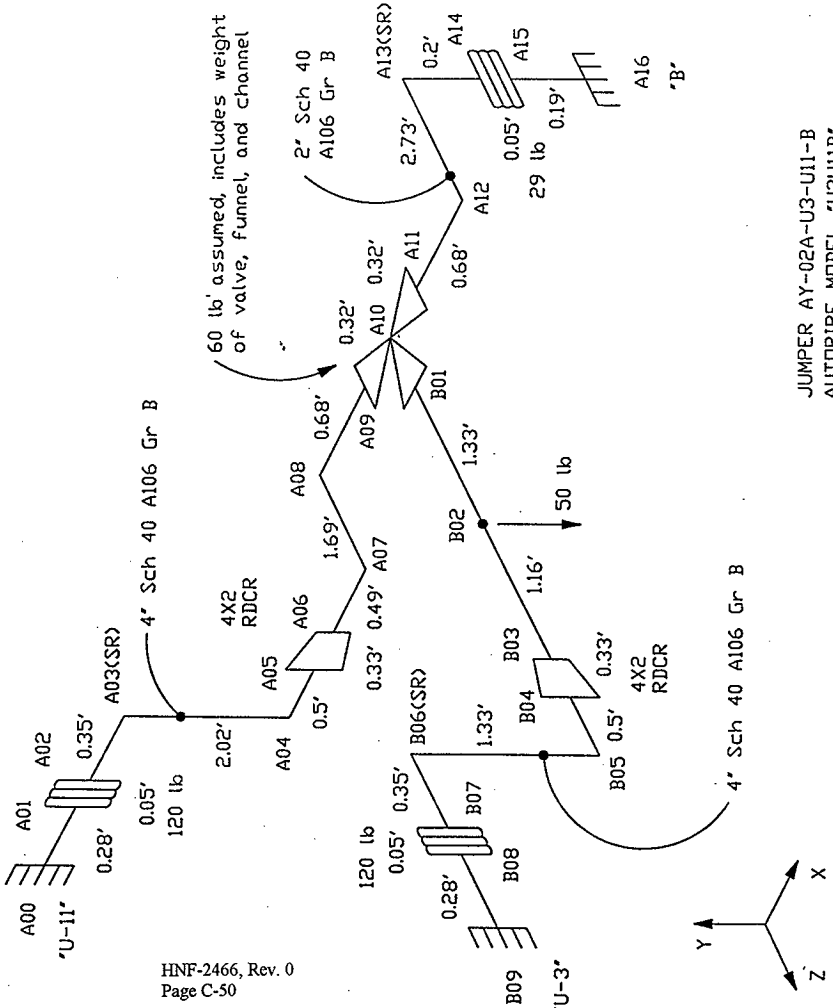

U3U11B W-302 TANK 241-C-106 WASTE RETRIEVAL Fluor Daniel Northwest
01/06/98 AutoPIPE+4.60 RESULT PAGE 12

RESTRAINT REACTIONS

Point name	Load combination	FORCES (lb) X	Y	Z	Result	MOMENTS (ft-lb) X	Y	Z	Result
A00	Anchor								
	GR	18	-212	-8	212	-9	10	-109	109
	T1	-40	-25	-4	47	7	-13	-117	118
	R1	54	53	46	88	6	16	32	36
	GR+T1	-22	-236	-12	238	-2	-3	-226	226
	TOTAL	76	289	58	305	8	19	258	259
A16	Anchor								
	GR	-21	-76	90	120	56	-3	7	57
	T1	85	-71	-506	518	-97	9	-35	104
	R1	18	17	40	47	20	3	6	21
	GR+T1	65	-147	-416	446	-40	6	-28	50
	TOTAL	83	164	456	492	61	9	34	70
B09	Anchor								
	GR	3	-233	-82	247	-114	8	-2	115
	T1	-46	95	510	521	-239	7	-29	241
	R1	47	55	57	92	28	27	7	39
	GR+T1	-43	-137	428	451	-354	15	-31	355
	TOTAL	89	192	485	529	381	42	37	386

U3U11B W-302 TANK 241-C-106 WASTE RETRIEVAL Fluor Daniel Northwest
01/06/98 AutoPIPE+4.60 RESULT PAGE 13

GLOBAL FORCES & MOMENTS

Point name	Load combination	FORCES (lb) X	Y	Z	Result	MOMENTS (ft-lb) X	Y	Z	Result
*** Segment A begin ***									
A00	GR	-18	212	8	212	9	-10	109	109
	T1	40	25	4	47	-7	13	117	118
	R1	54	52	45	88	6	16	32	36
	GR+T1	22	236	12	238	2	3	226	226
	TOTAL	76	289	57	304	8	19	258	259
A01	GR	-18	87	8	89	9	-8	50	51
	T1	40	25	4	47	-7	14	111	112
	R1	38	34	26	57	6	8	29	31
	GR+T1	22	112	12	114	2	6	160	160
	TOTAL	60	145	37	161	8	14	189	190
A02	GR	-18	87	8	89	9	-7	42	44
	T1	40	25	4	47	-7	14	109	110
	R1	28	19	10	36	6	8	29	31
	GR+T1	22	112	12	114	2	7	152	152
	TOTAL	50	131	22	142	8	15	181	182
A03 N	GR	-18	87	8	89	9	-7	41	43
	T1	40	25	4	47	-7	14	109	110
	R1	28	19	10	35	6	8	29	31
	GR+T1	22	111	12	114	2	7	150	150
	TOTAL	50	130	22	141	8	15	179	180
A03 M	GR	-18	82	8	84	10	-5	23	26
	T1	40	25	4	47	-7	15	99	101
	R1	28	19	9	35	5	10	28	31
	GR+T1	22	107	12	110	3	10	122	123
	TOTAL	50	126	21	137	8	20	151	152
A03 F	GR	-18	78	8	80	12	-5	19	23
	T1	40	25	4	47	-6	15	88	89
	R1	27	18	9	34	4	11	23	26
	GR+T1	22	102	12	105	6	11	107	108
	TOTAL	49	120	21	132	10	22	130	132
A04 N	GR	-18	58	8	61	21	-5	40	46
	T1	40	25	4	47	-1	15	41	44
	R1	26	17	8	32	11	11	16	22
	GR+T1	22	82	12	86	20	11	81	84
	TOTAL	48	100	20	112	31	22	96	104

GLOBAL FORCES & MOMENTS

Point name	Load combination	FORCES (lb) X	Y	Z	Result	MOMENTS (ft-lb) X	Y	Z	Result
B05 F	GR	3	-90	-82	122	-73	10	-4	74
	T1	-46	95	510	521	119	-24	9	122
	R1	16	23	27	39	24	14	7	28
	GR+T1	-43	5	428	430	46	-14	5	48
	TOTAL	59	28	454	459	70	28	12	76
B06 N	GR	3	-99	-82	129	-32	10	-3	34
	T1	-46	95	510	521	-134	-24	-13	137
	R1	17	23	27	40	14	14	2	20
	GR+T1	-43	-3	428	430	-166	-14	-16	168
	TOTAL	60	27	455	459	181	28	18	184
B06 M	GR	3	-103	-82	132	-23	10	-2	25
	T1	-46	95	510	521	-245	-19	-24	247
	R1	17	24	27	40	14	15	5	21
	GR+T1	-43	-8	428	430	-268	-9	-26	269
	TOTAL	60	32	455	460	282	25	32	285
B06 F	GR	3	-108	-82	135	-40	9	-2	41
	T1	-46	95	510	521	-272	-8	-29	274
	R1	17	24	27	40	17	19	7	26
	GR+T1	-43	-12	428	430	-312	1	-31	314
	TOTAL	60	36	455	461	329	19	37	332
B07	GR	3	-228	-82	242	-41	9	-2	42
	T1	-46	95	510	521	-271	-8	-29	273
	R1	28	37	39	61	17	19	7	26
	GR+T1	-43	-133	428	450	-312	1	-31	314
	TOTAL	71	169	467	502	329	20	37	332
B08	GR	3	-228	-82	242	-50	9	-2	50
	T1	-46	95	510	521	-266	-5	-29	268
	R1	46	54	56	91	18	20	7	28
	GR+T1	-43	-133	428	450	-316	3	-31	317
	TOTAL	89	187	484	527	334	23	37	337
B09	GR	3	-233	-82	247	-114	8	-2	115
	T1	-46	95	510	521	-239	7	-29	241
	R1	46	54	56	91	28	27	7	39
	GR+T1	-43	-137	428	451	-354	15	-31	355
	TOTAL	89	192	484	528	381	42	37	386

*** Segment B end ***

ASME B31.3c (1992) CODE COMPLIANCE

(Moments in ft-lb) (Stress in psi)

Point name	Load combination	In-Pl. Moment	Out-Pl. Moment	Torsion Moment	S.I.F In	S.I.F Out	Eq. no.	Load type	Code Stress	Code Allow.
*** Segment A begin ***										
A00	Max P									
	GR + Max P	109	10		1.00	1.00	(3a)	HOOP	3350	20000
	Cold to T1	117	13	7	1.00	1.00	(18)	SUST	1926	20000
	Sus. + R1	141	26		1.00	1.00	(17)	DISP	442	30000
					1.00	1.00	(18)	OCC	2059	26600
A01	Max P									
	GR + Max P	50	8		1.00	1.00	(3a)	HOOP	3350	20000
	Cold to T1	111	14	7	1.00	1.00	(18)	SUST	1707	20000
	Sus. + R1	79	16		1.00	1.00	(17)	DISP	417	30000
					1.00	1.00	(18)	OCC	1819	26600
A02	Max P									
	GR + Max P	42	7		1.00	1.00	(3a)	HOOP	3350	20000
	Cold to T1	109	14	7	1.00	1.00	(18)	SUST	1680	20000
	Sus. + R1	72	15		1.00	1.00	(17)	DISP	412	30000
					1.00	1.00	(18)	OCC	1793	26600
A03 N-	Max P									
	GR + Max P	41	7		1.00	1.00	(3a)	HOOP	3350	20000
	Cold to T1	109	14	7	1.00	1.00	(18)	SUST	1675	20000
	Sus. + R1	70	15		1.00	1.00	(17)	DISP	411	30000
					1.00	1.00	(18)	OCC	1789	26600
A03 N+	Max P									
	GR + Max P	41	7		2.56	2.13	(3a)	HOOP	3350	20000
	Cold to T1	109	14	7	2.56	2.13	(18)	SUST	1917	20000
	Sus. + R1	70	15		2.56	2.13	(17)	DISP	1047	30000
					2.56	2.13	(18)	OCC	2204	26600
A03 M	Max P									
	GR + Max P	23	3		2.56	2.13	(3a)	HOOP	3350	20000
	Cold to T1	99	6	16	2.56	2.13	(18)	SUST	1741	20000
	Sus. + R1	51	8		2.56	2.13	(17)	DISP	951	30000
					2.56	2.13	(18)	OCC	2014	26600
A03 F-	Max P									
	GR + Max P	19	12		2.56	2.13	(3a)	HOOP	3350	20000
	Cold to T1	88	6	15	2.56	2.13	(18)	SUST	1726	20000
	Sus. + R1	42	16		2.56	2.13	(17)	DISP	840	30000
					2.56	2.13	(18)	OCC	1951	26600
A03 F+	Max P									
	GR + Max P	12	19		1.00	1.00	(3a)	HOOP	3350	20000
	Cold to T1	6	88	15	1.00	1.00	(18)	SUST	1604	20000
	Sus. + R1	16	42		1.00	1.00	(17)	DISP	333	30000
					1.00	1.00	(18)	OCC	1692	26600
A04 N-	Max P									
	GR + Max P	21	40		1.00	1.00	(3a)	HOOP	3350	20000
	Cold to T1	1	41	15	1.00	1.00	(18)	SUST	1689	20000
	Sus. + R1	33	56		1.00	1.00	(17)	DISP	163	30000
					1.00	1.00	(18)	OCC	1760	26600

W320-24-018

241-AY-102, Dome Load Summary Report

KAISER ENGINEERS HANFORD	CALCULATION IDENTIFICATION AND INDEX	Page i of iii Date 6-21-94

This sheet shows the status and description of the attached Design Analysis sheets.

Discipline Structural WO/Job No. ER4319/W-320 Calculation No. W320-24-018

Project No. & Name Project W-320, Tank 241-C-106 Sluicing

Calculation Item 241-AY-102, Dome Load Summary Report

These calculations apply to:

Dwg. No. N/A Rev. No.

Dwg. No. N/A Rev. No.

Other (Study, CDR) N/A Rev. No.

The status of these calculations is:

[] Preliminary Calculations

[X] Final Calculations

[] Check Calculations (On Calculation Dated)

[] Void Calculation (Reason Voided)

Incorporated in Final Drawings? [] Yes [X] No

This calculation verified by independent "check" calculations? [] Yes [X] No

Original and Revised Calculation Approvals:

	Rev. 0 Signature/Date	Rev. 1 Signature/Date	Rev. 2 Signature/Date
Originator	James R. Booth/6-21-94 James R Booth/6-14-95	[illegible] 9/26/96	
Checked by	[illegible] 6/14/95	[illegible] 9/16/96	
Approved by	[illegible] 6/15/95	[illegible] 9/26/96	
Checked Against Approved Vendor Data		[illegible] 9/26/96	

INDEX

Design Analysis Page No.	Description
1	Objective, Criteria, Data, Assumptions, Method, References, and Conclusion.
2-4	Dome Load Summary Calculations
5	Dome Load Table
Attachment A	In-Pit Cooling System Vendor Data
Attachment B	Pump Vendor Data

WJM 9/16/96

Rev 1: Revised pages 1,2,3,4 & 5 for as-documented W-320 dome load additions.

KEH 0378.00 (06/92) KEF072

CALCULATION CROSS INDEX (Typical)

Subject Calculation No. W320-24-010

Subject Calculation Revision No.	Superceded by Calculation No.	These interfacing calculation/documents provide input to the subject calculation, and if revised may require revision of the subject calculation.		Results and conclusions of the subject calculation are used in these interfacing calculations and/or documents.		Does the output interface calculation/ documents require revision?		Has the output interface calculation/ documents been revised?		Discipline manager's signature and date indicating evaluation complete.
		Calculation/Document No.	Revision No.	Calculation/Document No.	Revision No.	Yes	No	Yes	No	
Ø	—	—	—	—	—		✓		✓	RWDerrickson 4/15/99

SFS No. _____

DESIGN VERIFICATION SCREENING CRITERIA

iii of iii

Project/Document No. W-320 / W320-24-018

When the design or design change affects hardware, formal design verification must be performed if one or more of the following questions must be answered affirmatively (YES).

YES	NO	
	✓	1. Does the design or design change involved meet the established criteria to be considered Safety Class 1?
	✓	2. Does this design or design change cause or permit changes to Safety Class 1 instrument or alarm setpoints outside of previously approved operational limits?
	✓	3. Does this design or design change significantly affect the nuclear or environmental safety consequences of a malfunction or failure of the structure, system, or component?
	✓	4. Does this design or design change involve or change design that has previously undergone formal design verification?

Assigned Lead Engineer — Date: 6/15/95

Responsible Discipline Manager — Date: 6/15/95

Original Design Package Distribution:

- Project Manager
- Design Verification Officer
- Engineering Document Control

Design Change Distribution:

- Attach to Engineering Change Notice

KEH-1981.00 (09/92)

DESIGN ANALYSIS

Client WHC
Subject 241-AY-102, Dome Load Summary
Location 200E AY-Farm, Tank 241-AY-102

WO/Job No. ER4319/W-320
Date 6/21/94 By J.R. Booth
Checked 4/14/95 By
Revised 8/24/96 By

OBJECTIVE:

The objective of this calculation is to determine the net addition to tank 241-AY-102 dome loading as a result of sluicing activities. This calculation is intended to be used by Tank Farm Operation personnel to monitor the cumlative loading on Tank 241-AY-102.

CRITERIA:

1. Summation of all gravity forces, directly above 241-AY-102 Tank Dome resulting from addition of equipment due to activities of the Project W-320.

2. Specification, "Operating Specification for Aging Waste Operations 241-AY & 241-AZ," prepared by Westinghouse Hanford Company, Document No. OSD-T-00017, Rev 0, February 1988.

GIVEN DATA:

1. Weight added by W-320, Tank 241-C-106 Sluicing.

ASSUMPTIONS:

1. Estimates of added equipment weights are based on input from W-320 project drawings, calculations, or vendor data.

2. Concrete = 150 pcf

3. Soil = 120 pcf

METHOD USED: Hand Calculation

REFERENCES:

1. Report, TANK 241-C-106 SLUICING DOME LOADS AND CIVIL UTILITY INTERFACE TANKS 241-C-106 AND 241-AY-102, by Kaiser Engineers Hanford, Doc. #W320LR.

2. Report, DOME LOAD CONTROL DOCUMENT TANK 241-SY-101, by Westinghouse Hanford Company, Doc # WHC-SD-WM-TA-141, Rev. 0, October 1992.

CONCLUSION:

A table summerizing the loading activity as a result of project W-320 is shown on page 5. Based on the following calculations additional net dome load as a result of project W-320 is **44111 lbs**. The allowable dome loading over Tank 241-AY-102 is 40 psf and 50 tons concentrated. Refer to reference 1 for weights of existing equipment.

9/16/96

DESIGN ANALYSIS

Client WHC
Subject 241-AY-102, Dome Load Summary
Location 200E AY-Farm, Tank 241-AY-102

WO/Job No. ER4319/W-320
Date 6/21/94 By J.R. Booth
Checked 6/14/95 By
Revised 8/24/96 By

CRANE LOAD SURCHARGE

A surcharge will be added to the dome load summary as a recommended in Ref. 1. Instead of adding a 28 Ton crane load acting directly over the tank, a 150 Ton Linkbelt crane, with its inside track loading the tank dome at a 90 degree orientation, with the closet track to the tank centered on the 20 ft LCEA boundary around the tank will be added similar to Ref. 1, page 7.

Based on the Pump Pit cover block weight, including lead covering, of 17,000 lbs, the surcharge imposed on the tank calculated in Ref. 2 will be reduced by a factor of 28,425/30,925 (see bottom of page A-11 and replace Wpump with 17,000 lbs) and a surcharge load of 12,767 lbs can be conservatively added to the summary.

See H-2-818432 for outline of Exclusion Zone around Tank 241-AY-102.

SLUICING EQUIPMENT

Pump Pit (241-AY-02A) H-2-818544, SH. 1

Jumper Assembly **U11-A-(C) = 456 lbs (H-2-818501)**

Jumper Assembly **U3-U8-B = 350 lbs (H-818502)**

Distributor Assembly 1250 + 700 = 1950 lb (H-2-818537, SH.1 & 2)

Total = 456 + 350 + 1950 = 2756 lbs

Sluice Pit (241-AY-02E) H-2-818545

New Cover Blocks: An average of 8" additional thickness of concrete is required. To account for higher ratio of steel embedments a 10% weight increase factor is used.
8.5' x 10.5' x 0.67' x 150 pcf x 1.10 = 9867 lbs

Winch/Immersible pump: = 5480 lbs (H-2-818495)

Booster Pump/Motor & Misc.: = 4170 lbs (H-2-818503)

In-Pit Cooling Fan Coil Assembly: = 300 lbs (H-2-818490)

Sub-Total Equipment = 5480 + 4170 + 300 = 9950 lbs

Plug/Penetration Adjustments: (H-2-818454 SH 4)

Pump Penetration, approx = $\pi/4(2.875^2 \times 1.625' + 3.0^2 \times .96') \times 150$ pcf = -2600 lbs
Slots, approx = 1.52' x .5' x .67' x 150 pcf x 3 = -229 lbs
Slot Plugs = 365 lbs x 3 =1095 lbs
Pump Penetration Plug = 2780 lbs
Total = 2780 + 1095 -229 -2600 = 1046 lbs

Total for 02E pit: 9867 + 9950 + 1046 = 20863 lbs

KJM 1 1/16/96

DESIGN ANALYSIS

Client WHC
Subject 241-AY-102, Dome Load Summary
Location 200E AY-Farm, Tank 241-AY-102

WO/Job No. ER4319/W-320
Date 6/21/94 By J.R. Booth
Checked 11/14/95 By
Revised 8/24/96 By

Transfer Lines

Determine weight of Transfer Lines over tank: (See dwg. H-2-818434)

Length of Supernate Line = 45.63 ft (from 4"-225# Steam line)

WT./ft of 4" steel line = 10.79 lb/ft

WT./ft of 6" encasement = 18.97 lb/ft

45.63'(10.79 lb/ft + 18.97 lb/ft) = 1358 lbs

WJH 11/16/96

Length of Slurry Line = 62.75 ft (from 4"-225#Steam line)

WT./ft of 4" steel line = 10.79 lb/ft

WT./ft of 6" encasement = 18.97 lb/ft

62.75' (10.79 lb/ft + 18.97 lb/ft) = 1867 lbs

Total = 1358 +1867 = 3225 lbs

Note: Weight of liquids in Transfer Lines not included since weight of displaced soil more than balances the difference.

DESIGN ANALYSIS

Client WHC
Subject 241-AY-102, Dome Load Summary
Location 200E AY-Farm, Tank 241-AY-102

WO/Job No. ER4319/W-320
Date 6/21/94 By J.R. Booth
Checked 6/14/95 By
Revised 8/24/96 By

HVAC Equipment

W-320 HVAC equipment at AY-Farm will be In-Pit Cooling Equipment which will consist of a In-Pit Cooling Coil and a pac mounted Chiller. H-2-818489)

Chiller Assembly = 1150 lbs

Pad = 7.5' x 4' x 8" thk x 150 pcf = 3000 lbs (H-2-818461)
Displaced Soil = 7.5' x 4' x 7" x 120 pcf = 2100 lbs

Sub-Total = 1150 + 3000 - 2100 = 2050 lbs

Misc. Equip. Pads:

CTB, ITB, & PTBX- 0621 : Say 500 lbs equip x 3 pads = 1500 lbs

Pads: 3.0' x 3.0' x 8" thk x 150 pcf x 3 = 2700 lbs
Displaced Soil = 3.0' x 3.0' x 7" x 120 pcf x 3 = 1890 lbs

Sub-Total = 1500+ 2700 - 1890 = 2310 lbs

Total = 2050 + 2310 = 4360 lbs Say 4500 lbs

DESIGN ANALYSIS

Client WHC
Subject 241-AY-102, Dome Load Summary
Location 200E AY-Farm, Tank 241-AY-102

WO/Job No. ER4319/W-320
Date 6/21/94 By J.R. Booth
Checked 6/14/95 By
Revised 8/24/94 By

TANK 241-AY-102 DOME LOAD SUMMARY

Crane Load Surcharge	12767
Pump Pit (02A)	2756
Sluice Pit (02E)	20863
Transfer Lines	3225
Equip Pads	4500
Total:	44111 lbs

KEH 0037.00 (06/92) KEF055

ATTACHMENT A

| cover + 6 pages

DAN KREGIN A-1, W320-24-018 1 of 6

Scott Fulman

INDEPENDENT INSTRUMENT and CONTROL SYSTEM SERVICES, Inc.

Edwards Engineering Corp. - Specialty Chiller Systems

SALES & SERVICE ON ANALYTICAL & PROCESS INSTRUMENTATION

CARTER SPRAGUE ENGINEERING

THERMAL PRODUCTS AND CONSULTING

P.O. BOX 9215 • YAKIMA, WASHINGTON 98909 • PHONE and FAX (509) 965-9253

To KAISER ENGINEERS FAX No. 373-3343 No. of Pages 6

P.O. BOX 888 53-07 Tele. No. 373-5296 Including this sheet 6

RICHLAND, WA. 99352 Attn: DAN Date 1-17 19 95

Subject CHILLER & FAN/COIL APPLICATION, DETAILS & PRICING

1 EA FAN/COIL UNIT P/N CSB-18-4-600-H (120 VAC ONLY) $1,713.00

(AS PER ATTACHED FAN/COIL DESIGN SPEC)

1 EA CHILLER UNIT P/N CE-2-AHP (ROUND STYLE) $9,134.00

TEMPERATE OUTDOOR LOCATIONS, EXPOSED PUMPS & NEMA 1 CONTROLS

OR

1 EA CHILLER UNIT. P/N CE-2-AHP (WHITE EXTERRIOR COLOR OUT DOOR WALK-IN ENCLOSURE) $15,434.00

SEVERE OUTDOOR LOCATIONS - CAN SURVIVE EXTREME WINTER & SUMMER CONDITIONS. REQUIRES CONCRETE PAD. SEE ATTACHED SPEC. FOR DETAILS. COMPLETE CHILLER UNIT AND ALL SYSTEM COMPONENTS WITH-IN WALK-IN ENCLOSURE, "RAIN TIGHT". CONTROL PANEL IS NEMA 1 & INSIDE-OUT OF WEATHER EXPOSURE.

NOTE: IF IT IS A HELP BOTH CHILLERS CAN BE LOCATED WITH-IN ONE COMMON ENCLOSURE AT A REDUCED COST, IF BOTH COOLING LOADS ARE IN CLOSE PROXIMITY. THIS MODEL WOULD BE A E-2-AHP (DUAL MODIFIED OUT DOOR WALK-IN ENCLOSURE) THE PRICE WOULD BE SOME WHAT LESS THAN THE SUM OF TWO INDIVIDUAL UNITS.

DELIVERY 6-8 WK.

TAX & FREIGHT NOT EXCL

TERMS NET 30 DAY

TO ORDER SEE ADDRESS AB

PLEASE REVISE THANKS SCOTT FULMAN J.E. EDWARDS-CARR

NOTE: IF YOU CAN ALLOW NO

A-2, W320-24-D18

INDEPENDENT INSTRUMENT and CONTROL SYSTEM SERVICES, Inc.

Edwards Engineering Corp. - Specialty Chiller Systems

SALES & SERVICE ON ANALYTICAL & PROCESS INSTRUMENTATION

CARTER SPRAGUE INCORPORATED — THERMAL PRODUCTS AND CONSULTANTS

P.O. BOX 9215 • YAKIMA, WASHINGTON 98909 • PHONE and FAX (509) 965-9253

To KAISER ENGINEERS

FAX No. 373-3343

Tele. No. 373 5296

Attn: DAN

No. of Pages 1

Including this sheet 1

Date 1-13 19 95

Subject BOTH ARE BASED ON LOCAL AMBIENT CONDITIONS 110°F @ 20% RH

THIS REPRESENTS A NORMAL CONDITION

COILS WOULD BE DRY

Tubes

Stock: 5/8 x .025 Cu
Pattern: 1.50 x 1.299 staggered

Fluid: PROPYLENE GLYCOL%Wt: 40.00 %
Fluid Flowrate [GPM] 4 GPM GPM
Entering Fluid Temp [degF] 60 F
Fluid Press. Drop [PSI] 10 PSI
Header Inside Dia. [in] 1/ Cu 'L'

Fins

Finned Height (inches): 12 in.
Finned Length (inches): 36 in.
Material x Thickness: .01 Al
Max Fin Spacing [FPI]: 5
Configuration: Waffle/Ripple

Fouling Factor, inside: 0
Fouling Factor, outside: 0

Capacity [CFM] 600 CFM
Location : Standard Air
Elevation [MSL, ft]: 0 ft

Connections: (S)ame or (O)pposite: S
Entering Air Dry Bulb [degF]: 110 FF
Entering Air Wet Bulb [degF]: 75 F

Solution

Face Velocity [FPM] ---------> 200
Number of Rows/F.P.I. -------> 2/5
Feeds/Passes/Tubes Dropped -> 1/16/0
Calculated Total BTUH -------> 15565
Calculated Sensible BTUH ---> 15562
Sensible Heat Ratio ----> 1
Lv Air Dry/Wet Bulb [F] ---> 86.4/68.3
Air Pressure Drop [iwg] ----> .027
Leaving Fluid Temp [F] ----> 68.5
Fluid Vel [fps] / PD [psi] -> 4.5/7.1

Tubes

Stock: 5/8 x .025 Cu
Pattern: 1.50 x 1.299 staggered

Fluid: PROPYLENE GLYCOL%Wt: 40.00 %
Fluid Flowrate [GPM] 4 GPM GPM
Entering Fluid Temp [degF] 60 F
Max Fluid Press. Drop [PSI] 10 PSI
Header Inside Dia. [in] 1/ Cu 'L'

Fins

Finned Height (inches): 12 in.
Finned Length (inches): 36 in.
Material x Thickness: .01 Al
Max Fin Spacing [FPI]: 5
Configuration: Waffle/Ripple

Fouling Factor, inside: 0
Fouling Factor, outside: 0

Capacity [CFM] 1200 CFM
Location : Standard Air
Elevation [MSL, ft]: 0 ft

Connections: (S)ame or (O)pposite: S
Entering Air Dry Bulb [degF]: 110 FF
Entering Air Wet Bulb [degF]: 75 F

Solution

Face Velocity [FPM] ---------> 400
Number of Rows/F.P.I. -------> 2/5
Feeds/Passes/Tubes Dropped -> 1/16/0
Calculated Total BTUH -------> 21701
Calculated Sensible BTUH ---> 21698
Calculated Sensible Heat Ratio ---------> 1
Sensible Heat Ratio ----> 93.6/7
Lv Air Dry/Wet Bulb [F] ---> .088
Air Pressure Drop [iwg] ----> 71.7
Leaving Fluid Temp [F] ----> 4.5/7
Fluid Vel [fps] / PD [psi] -> 4.5/7

A-3, CW320-24-018

HNF-2466, Rev.0

INDEPENDENT INSTRUMENT and CONTROL SYSTEM SERVICES, Inc.

Edwards Engineering Corp. - Specialty Chiller Systems

SALES & SERVICE ON ANALYTICAL & PROCESS INSTRUMENTATION

CARTER SPRAGUE INCORPORATED — THERMAL PRODUCTS AND CONSULTING

P.O. BOX 9215 • YAKIMA, WASHINGTON 98909 • PHONE and FAX (509) 965-9253

To KAISER ENGINEERS

FAX No.

Tele. No.

Attn: DAN

No. of Pages

Including this sheet

Date 19

Subject BOTH ARE BASED ON ABNORMAL CONDITIONS OF 110°F @ 50% RH COIL WOULD BE WET BUT STILL ABLE TO COMPLETE HEAT TRANSFER.

---------- Tubes ----------
Stock: 5/8 x .025 Cu
Pattern: 1.50 x 1.299 staggered

Fluid: PROPYLENE GLYCOL%Wt: 40.00 %
Fluid Flowrate [GPM] 4 GPM
Entering Fluid Temp [degF] 60 F
Max Fluid Press. Drop [PSI] 10 PSI
Header Inside Dia. [in] 1/ Cu 'L'

---------- Fins ----------
Finned Height (inches): 12 in.
Finned Length (inches): 36 in.
Material x Thickness: .01 Al
Max Fin Spacing [FPI]: 5
Configuration: Waffle/Ripple

Fouling Factor, inside: 0
Fouling Factor, outside: 0

---------- Fan ----------
Capacity [CFM]: 600 CFM
Location : Standard Air
Elevation [MSL, ft]: 0 ft

Connections: (S)ame or (O)pposite: S
Entering Air Dry Bulb [degF]: 110 F
Entering Air Wet Bulb [degF]: 51 F

---------- Solution ----------
Face Velocity [FPM] --------> 200
Number of Rows/F.P.I. ------> 2/5
Feeds/Passes/Tubes Dropped -> 1/16/0
Calculated Total BTUH ------> 24536
Calculated Sensible BTUH ---> 11990
Sensible Heat Ratio --------> .49
Lv Air Dry/Wet Bulb [F] ---> 92.3/83.
Air Pressure Drop [iwg] ----> .044
Leaving Fluid Temp [F] ----> 73.2
Fluid Vel [fps] / PD [psi] -> 4.5/7.1

---------- Tubes ----------
Stock: 5/8 x .025 Cu
Pattern: 1.50 x 1.299 staggered

Fluid: PROPYLENE GLYCOL%Wt: 40.00 %
Fluid Flowrate [GPM] 4 GPM
Entering Fluid Temp [degF] 60 F
Max Fluid Press. Drop [PSI] 10 PSI
Header Inside Dia. [in] 1/ Cu 'L'

---------- Fins ----------
Finned Height (inches): 12 in.
Finned Length (inches): 36 in.
Material x Thickness: .01 Al
Max Fin Spacing [FPI]: 5
Configuration: Waffle/Ripple

Fouling Factor, inside: 0
Fouling Factor, outside: 0

---------- Fan ----------
Capacity [CFM]: 1200 CFM
Location : Standard Air
Elevation [MSL, ft]: 0 ft

Connections: (S)ame or (O)pposite: S
Entering Air Dry Bulb [degF]: 110 F
Entering Air Wet Bulb [degF]: 51 F

---------- Solution ----------
Face Velocity [FPM] --------> 400
Number of Rows/F.P.I. ------> 2/5
Feeds/Passes/Tubes Dropped -> 1/16/0
Calculated Total BTUH ------> 29273
Calculated Sensible BTUH ---> 16374
Sensible Heat Ratio --------> .56
Lv Air Dry/Wet Bulb [F] ---> 98/86.
Air Pressure Drop [iwg] ----> .144
Leaving Fluid Temp [F] ----> 75.9
Fluid Vel [fps] / PD [psi] -> 4.5/7.

A-4, W-320-24-018

EDWARDS PACKAGED WATER CHILLERS, AIR COOLED AND WATER-COOLED

Air-Cooled Model CD-2-A
Capacity in 1000's of B.T.U./Hr.

Leaving Coolant Temp °F	Ambient Temperature, °F 75°	85°	95°	105°	115°*
60	31.0	28.0	24.5	21.5	18.0
55	27.0	24.5	21.5	18.5	15.5
50	24.0	21.0	18.5	16.0	13.4
45	21.2	18.5	16.2	13.5	11.2
40	18.2	16.0	13.5	11.5	9.1
35	15.5	13.2	11.5	9.2	7.2
30	13.0	11.1	9.2	7.5	5.5
25	10.6	9.0	7.3	5.7	4.0
20	8.5	7.0	5.6	4.2	-

Water-Cooled Model CD-2-W
Capacity in 1000's of B.T.U./Hr.

Leaving Coolant Temp °F	Condenser Water Temperature, °F 75°	85°	95°	105°	115°
60	33.2	31.0	28.0	24.5	21.5
55	30.0	27.0	24.5	21.5	18.5
50	26.5	24.0	21.0	18.5	16.0
45	23.5	21.2	18.5	16.2	13.5
40	20.1	18.2	16.0	13.5	11.5
35	17.5	15.5	13.2	11.5	9.2
30	15.0	13.0	11.1	9.2	7.5
25	12.0	10.6	9.0	7.3	5.7
20	10.5	8.5	7.0	5.6	4.2

The above are net ratings with allowance made for the heat input of the recirculation (by-pass) pump, but not for the system pump.
* For ambient temperatures above 110°F, consult factory for special design and pricing.

ELECTRICAL DATA
(Main disconnect Optional)

Volts	Phase	Hertz	Compressor(s) HP	FLA Each	Fan(s) HP	FLA Each	By-Pass Pump HP	FLA Each	System Pump HP	FLA Each	Customer Supplied Field Wiring and Main Disconnect Fuse Total Unit FLA	Size Circuit Breaker	Size (Time Lag)
CD-2-A Air Cooled													
230	1	60	(1) 2 HP	15.6	(1)1/2	4.9	½	4.9	1½	10.0	35.4	60 AMP	50 AMP
200	3	60	(1) 2 HP	10.0	(1)1/2	2.3	½	2.3	1½	5.9	20.5	30 AMP	30 AMP
230	3	60	(1) 2 HP	10.0	(1)1/2	2.0	½	2.0	1½	5.2	19.2	30 AMP	25 AMP
460	3	60	(1) 2 HP	3.5	(1)1/2	1.0	½	1.0	1½	2.6	8.1	30 AMP	12 AMP
CD-2-W Water Cooled													
230	1	60	(1) 2 HP	15.6	-	-	½	4.9	1½	10.0	30.5	60 AMP	40 AMP
200	3	60	(1) 2 HP	10.0	-	-	½	2.3	1½	5.9	18.2	30 AMP	25 AMP
230	3	60	(1) 2 HP	10.0	-	-	½	2.0	1½	5.2	17.2	30 AMP	25 AMP
460	3	60	(1) 2 HP	3.5	-	-	½	1.0	1½	2.6	7.1	30 AMP	10 AMP

H.P. RATINGS

Models	Compressor(s) No.	HP	Condenser Fan No.	HP	By-Pass Pump HP	System Pump HP	Ft. hd	GPM
CD-2-A	1	2	1	1/2	1/2	1.5	65	10
CD-2-W	1	2	-	-	1/2	1.5	65	10

DATA AND DESCRIPTION

Model CD-2	Type of Condenser:	Round Model Air	Round Model Water	Walk-in Enclosure Air	Walk-in Enclosure Water
Physical Dimensions	Width	3'6"	3'6"	4'6"	4'6"
	Length	3'6"	3'6"	8'0"	8'0"
	Height	4'7"	3'11"	7'8"	7'3"
Condensing Air Required (CFM)		1600	-	1600	-
Condenser Water Pipe Size		-	3/4"	-	3/4"
Piping Size	Supply	1¼"	1¼"	1¼"	1¼"
	Return	1¼"	1¼"	1¼"	1¼"
Reservoir Capacity (approx. gal.)		25	25	25	25
Operating Weight (lbs.)		1150	1100	1768	1700
Crating:	Width	4'0"	4'0"	No Crating	
	Length	4'0"	4'0"		
	Height	5'1"	4'5"		
Shipping Weight lbs.		940	888	1560	1492

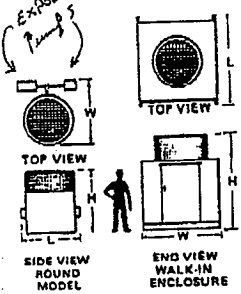

CONSTRUCTION FEATURES

TYPICAL SCHEMATIC OF WALK-IN ENCLOSURE MODEL

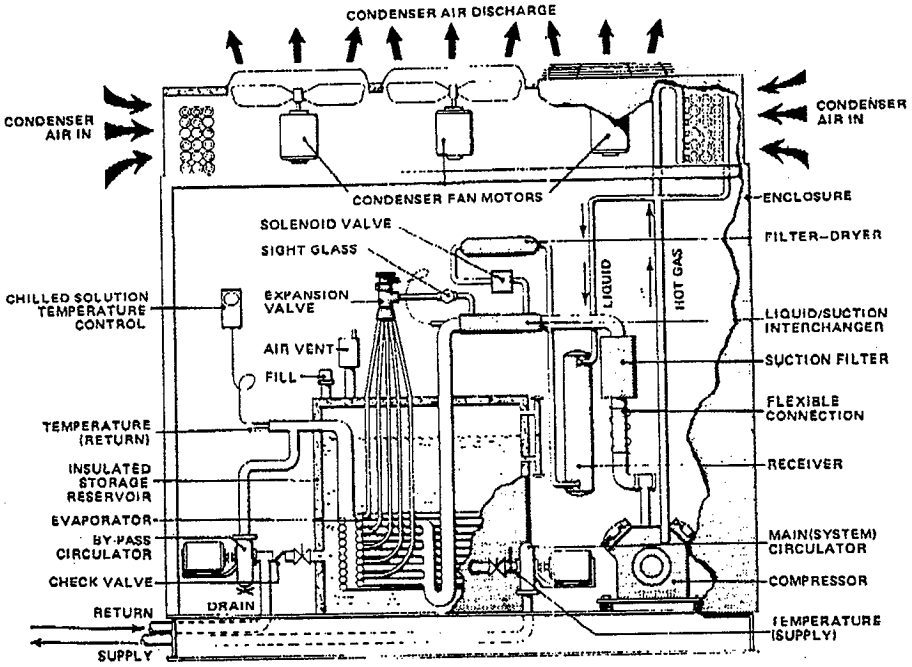

WARRANTY (Limited)

The manufacturer warrants to the dealer the products described herein to be free of original defects in material and workmanship, and will, within one year from the date of factory shipment, repair or replace, at its option, F.O.B. factory, any parts which upon inspection at its factory are found to be defective. Any such defective parts are to be returned through the dealer from whom purchased, transportation charges prepaid. The manufacturer shall not be liable for any charges involved in the removal or replacement of material at the point of operation, or for any damages which anyone may allege to have suffered as a result of any defect. The manufacturer's liability is limited to repair or replace as aforesaid, and is further limited to the dealer. The manufacturer makes no guaranty or warranty of any kind, express or implied, to any other person. This guaranty and warranty negates all warranties and conditions implied by any applicable statutes or rules of law. A competent service organization must be engaged by owner to maintain the equipment. The manufacturer retains the right to change prices, design, and material without notice. (W-1)

EDWARDS FAN COIL PART NUMBER

CSB-18-4-600-H

1-29-95
PER SCOTT HIGHAM (PHONE)
OVERALL OUTSIDE LENGTH WILL BE 43"

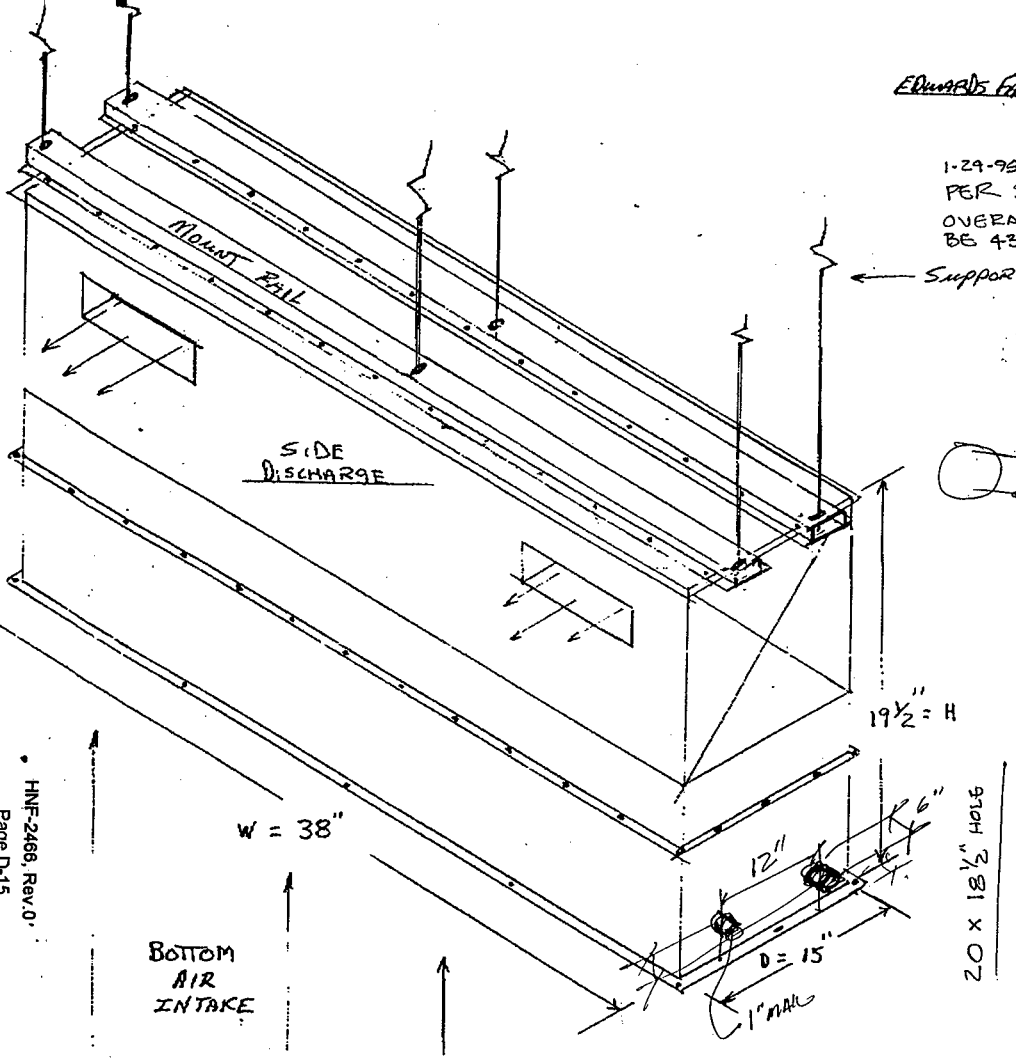

PER SCOTT
1" NPT MALE CONN

2x2

WEIGHT = 145 LBS
GALVANIZED STEEL 18 GA
1" m.P.T. "M" COPPER CONN
120/60 Hz 1Ø VARIABLE SPD
½ HP T.E.F.C.

DATE 1-16-95

A-61 W320924-018

ATTACHMENT B

1 cover + 3 pages.

C 45011

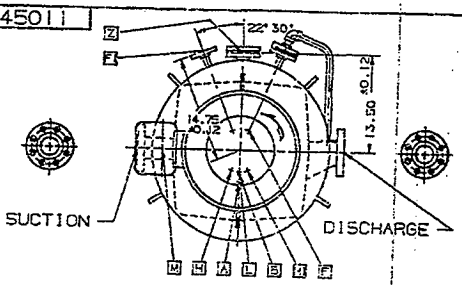

CONNECTIONS:

- A 1/4-18 NPT - ALTERNATE LUBRICANT INLET TO THRUST BEARING (PLUGGED)
- B 1/4-18 NPT - OIL OUTLET FROM BEARING HOUSING
- F 1/2-14 NPT - INLET TO SEAL THRU API PLAN 11 FROM PUMP DISCHARGE
- F 1/2-300 LB. R.F. S.W. FLANGE - CASING VENT
- H 1/2-14 NPT - SEAL VENT
- H 1/2-14 NPT - SEAL DRAIN
- L 1/4-18 NPT - OIL MIST INLET TO BEARING HOUSING
- M MOTOR CONNECTION FOR POWER LEADS
- Z 3/4-300 LB. R.F. S.W. FLANGE - CASING DRAIN (COVERED WITH BLIND FLANGE)

WEIGHTS:

① PUMP 800 LBS.
MOTOR 2700 LBS.
TOTAL 3500 LBS. APPROXIMATE

DRIVER DATA:

① 250 HP - 3600 RPM, T.E.F.C., VERTICAL ELECTRIC MOTOR, RELIANCE FRAME NO. 326TC

NOZZLE LOADS:

SUCTION & DISCHARGE

Fx 200 LBS.	Mx 340 FT-LBS.
Fy 130 LBS.	My 250 FT-LBS.
Fz 160 LBS.	Mz 170 FT-LBS.

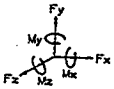

NOTES:

1 FOR ASSEMBLY SEE DRAWING NO.C45010.
2 FOR PARTS LIST SEE "LIST OF COMPONENTS".
3 ALL FLANGE CONNECTIONS TO CONFORM TO A FACE FINISH OF 125 RMS.

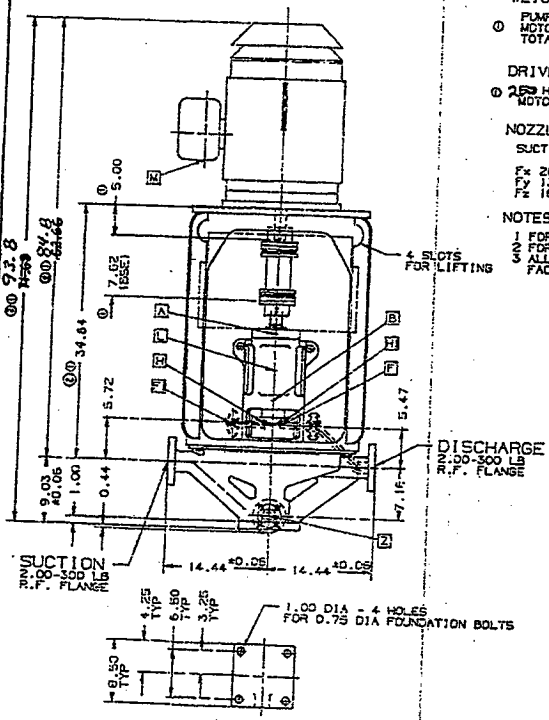

NO.	BY	DATE	CHK. BY	DESCRIPTION
2	BM	4-28-88	BAM	DIM.S DECREASED 0.59
1	MD	4-27-88	RAM	MOTOR WAS 326 HP FRAME

REVISIONS

LAWRENCE PUMPS INC.

TRUE-LINE SERIES

PUMP SIZE 2x3x10 2x3x8 1x3
SERIES: 1400
MODEL: 14-4A
DR.BY: TT
CHK.BY: RAM 11/28/88
APPV.BY:
DATE: 21 NOV 88

CUSTOMER:
PURCHASE ORDER NO.:
PUMP SERIAL NO.:
PUMP ITEM NO.:
CERTIFIED BY:
DATE:

PUMP ASSEMBLY:
PUMP PARTS LIST:

PUMP ELEVATION

DRAWING NO.: C 45011

NEMA FRAMES 182HP - 449HP — (See drawings below.) - Dimensions in inches/millimeters

FRAME	P	T	CAST IRON TERMINAL BOX AA	AB	AC	AF	AJ	AK(2)	BB	BD	BE	BF	AG STD	AG LG(5)	AH(4)	BY STD	BY LG(5)	SHAFT AND KEY V	U(1)	EU(3)	EP(MIN)	LGTH	SQ.KEY	WT. LBS./KG. STD.	WT. LBS./KG. LG(5)
182HP	9.50 241	1.44 36.5	.75 19	7.75 197	6.31 160	1.94 49.3	9.12 232	8.250 210	.19 4.8	10.00 254	.62 15.9	.44 11.1	17.56 446	19.06 484	2.750 69.85	9.38 238	10.12 257	2.75 69.8	1.1250 28.575	.875 22.22	1.16 29.5	1.28 32.5	.250 6.35	120 54	145 65
L184HP	9.50 241	1.44 36.5	.75 19	7.75 197	6.31 160	1.94 49.3	9.12 232	8.250 210	.19 4.8	10.00 254	.62 15.9	.44 11.1	18.56 471	20.06 509	2.750 69.85	9.88 251	10.62 270	2.75 69.8	1.1250 28.575	.875 22.22	1.16 29.5	1.28 32.5	.250 6.35	130 59	155 70
213HP	10.50 267	1.44 36.5	1.00 25.4	9.75 248	7.75 197	2.50 63.5	9.12 232	8.250 210	.19 4.8	10.00 254	.62 15.9	.44 11.1	19.50 495	21.25 540	2.750 69.85	9.75 248	10.62 270	2.75 69.8	1.1250 28.575	.875 22.22	1.38 35.0	1.28 32.5	.250 6.35	175 79	190 86
L215HP	10.50 267	1.44 36.5	1.00 25.4	9.75 248	7.75 197	2.50 63.5	9.12 232	8.250 210	.19 4.8	10.00 254	.62 15.9	.44 11.1	21.00 533	21.88 555	2.750 69.85	10.50 267	10.94 278	2.75 69.8	1.1250 28.575	.875 22.22	1.38 35.0	1.28 32.5	.250 6.35	200 91	215 97
254HP	13.88 352	2.25 57.2	1.25 31.8	10.19 259	8.22 209	2.50 63.5	9.12 232	8.250 210	.19 4.8	10.00 254	.62 15.9	.44 11.1	22.94 582	—	2.750 69.85	10.81 275	—	2.75 69.8	1.1250 28.575	.875 22.22	1.75 44.4	1.28 32.5	.250 6.35	215 98	—
255HP	13.88 352	2.25 57.2	1.25 31.8	10.19 259	8.22 209	2.50 63.5	9.12 232	8.250 210	.19 4.8	10.00 254	.62 15.9	.44 11.1	24.69 627	—	2.750 69.85	11.69 297	—	2.75 69.8	1.1250 28.575	.875 22.22	1.75 44.4	1.28 32.5	.250 6.35	245 111	—
284HP	15.50 394	2.25 57.2	1.5 38	12.00 305	9.56 243	3.00 76.2	9.12 232	8.250 210	.25 6.4	10.00 254	.69 17.5	.44 11.1	25.88 657	—	2.750 69.85	12.25 311	—	2.75 69.8	1.1250 28.575	.875 22.22	1.75 44.4	1.28 32.5	.250 6.35	270 122	—
285HP	15.50 394	2.25 57.2	1.5 38	12.00 305	9.56 243	3.00 76.2	9.12 232	8.250 210	.25 6.4	10.00 254	.69 17.5	.44 11.1	27.38 695	—	2.750 69.85	13.00 330	—	2.75 69.8	1.1250 28.575	.875 22.22	1.75 44.4	1.28 32.5	.250 6.35	320 145	—
284HPH	15.50 394	2.25 57.2	1.5 38	12.00 305	9.56 243	3.00 76.2	14.75 375	13.500 343	.25 6.4	16.50 492	.88 22.2	.69 17.5	25.88 657	—	4.500 114	12.25 311	—	4.50 114	1.6250 41.3	1.250 31.8	1.75 44.4	1.28 77	.375 9.5	300 136	—
285HPH	15.50 394	2.25 57.2	1.5 38	12.00 305	9.56 243	3.00 76.2	14.75 375	13.500 343	.25 6.4	16.50 492	.88 22.2	.69 17.5	27.38 695	—	4.500 114	13.00 330	—	4.50 114	1.6250 41.3	1.250 31.8	1.75 44.4	1.28 77	.375 9.5	350 159	—
324HP	17.75 451	2.25 57.2	2 50.8	14.69 373	10.94 278	3.63 92.1	14.75 375	13.500 343	.25 6.4	16.50 419	.88 22.2	.69 17.5	29.06 738	—	4.500 114	13.50 343	—	4.50 114	1.6250 41.275	1.250 31.75	2.12 53.8	3.03 77.0	.375 9.52	480 218	—
325HP	17.75 451	2.25 57.2	2 50.8	14.69 373	10.94 278	3.63 92.1	14.75 375	13.500 343	.25 6.4	16.50 419	.88 22.2	.69 17.5	30.56 776	—	4.500 114	14.25 362	—	4.50 114	1.6250 41.275	1.250 31.75	2.12 53.8	3.03 77.0	.375 9.52	530 240	—
364HP	20.50 521	2.25 57.2	3 76	17.94 456	13.75 349	4.13 105	14.75 375	13.500 343	.25 6.4	16.50 419	.88 22.2	.69 17.5	33.38 847	—	4.500 114	15.38 390	—	4.50 114	1.6250 41.275	1.250 31.75	2.25 57.2	3.03 77.0	.375 9.52	660 299	—
365HP	20.50 521	2.25 57.2	3 76	17.94 456	13.75 349	4.13 105	14.75 375	13.500 343	.25 6.4	16.50 419	.88 22.2	.69 17.5	33.38 847	—	4.500 114	15.38 390	—	4.50 114	1.6250 41.275	1.250 31.75	2.25 57.2	3.03 77.0	.375 9.52	710 322	—
404HP	22.62 575	2.50 63.5	3 76	19.19 487	15.00 381	4.13 105	14.75 375	13.500 343	.25 6.4	16.50 419	.94 23.8	.69 17.5	35.19 893	—	4.500 114	15.12 384	—	4.50 114	1.6250 41.275	1.250 31.75	2.25 57.2	3.03 77.0	.375 9.52	950 431	—
405HP	22.62 575	2.50 63.5	3 76	19.19 487	15.00 381	4.13 105	14.75 375	13.500 343	.25 6.4	16.50 419	.94 23.8	.69 17.5	35.19 893	—	4.500 114	15.12 384	—	4.50 114	1.6250 41.275	1.250 31.75	2.25 57.2	3.03 77.0	.375 9.52	1075 488	—
444HP	25.50 648	2.50 63.5	3 76	22.13 562	17.37 441	6.00 152	14.75 375	13.500 343	.25 6.4	16.50 419	1.06 27.0	.69 17.5	40.88 1038	—	4.500 114	18.00 457	—	4.50 114	2.125 53.975	1.750 44.45	2.25 57.2	3.03 77.0	.500 12.70	1405 637	—
445HP	25.50 648	2.50 63.5	3 76	22.13 562	17.37 441	6.00 152	14.75 375	13.500 343	.25 6.4	16.50 419	1.06 27.0	.69 17.5	40.88 1038	—	4.500 114	18.00 457	—	4.50 114	2.125 53.975	1.750 44.45	2.25 57.2	3.03 77.0	.500 12.70	1555 705	—
447HP	25.25 641	2.50 63.5	(5)	23.37 594	18.12 460	7.00 178	14.75 375	13.500 343	.25 6.4	16.50 419	1.06 27.0	.69 17.5	49.38 1254	—	4.500 114	22.25 565	—	4.50 114	2.125 53.975	1.750 44.45	2.25 57.2	3.03 77.0	.500 12.70	2900 1314	—
449HP	25.25 641	2.50 63.5	(5)	23.37 594	18.12 460	7.00 178	14.75 375	13.500 343	.25 6.4	16.50 419	1.06 27.0	.69 17.5	49.38 1254	—	4.500 114	22.25 565	—	4.50 114	2.125 53.975	1.750 44.45	2.25 57.2	3.03 77.0	.500 12.70	2900 1314	—

(1) "U" Varies — up to 2.125 +.0000, -.0005; — 2.125 and larger +.000, -.001

(2) "AK" Varies — 180 HP, — 250HP, +.003, -.000; — 280HPH, — 440HP +.005, -.000

Face runout and eccentricity — 182HP — 445HP, .004 Max. T.I.R. .10; — 447HP — 449HP, .007 Max. T.I.R. .18

53.975 +.000, -.013
53.975 and larger +.00, -.03
+.08, -.00
+.13, -.00

(3) "EU" Varies +.000, -.005 +.00, -.13
(4) "AH" Varies +.030, -.030 +.76, -.76
(5) "AA" Varies with full load amps: 4" (120 mm) @ 201 amps, 5" (127 mm) @ 335 amps, 6" (152 mm) @ 600 amps.
Maximum permissible shaft runout when measured at end of shaft extension is .002 inches (.051 mm) Max. T.I.R. (.003 inches, .076 mm on 447HP — 449HP).
If mounting clearance is required, consult factory.

NORMAL THRUST, TEFC Above-NEMA, 350 — 400 HP

5010P Frame, 460 Volts

HP	350	400
Full Load Speed	3560 1773	3558 1773
Frame Size	5010P 5010P	5010P 5010P
Up or Down Thrust	720 720	720 720

5010P Frame, 2300, 4000 Volts

HP	200	250	300	350	400
Full Load Speed	1189 890	1783 1189	3571 1783 1188	3570 1784	3579 1784
Frame	5010P 5010P	5010P 5010P	5010P 5010P 5010P	5010P 5010P	5010P 5010P
Up or Down Thrust	960 1120	720 960	720 720 960	720 720	720 720

- 5010P Frames
- 460, 2300, 4000 Volts
- 3-Phase, 60 Hz
- 1.0 S.F., Continuous Duty
- 40°C. Ambient
- Class B Insulation
- Ball Bearing
- Solid Shaft

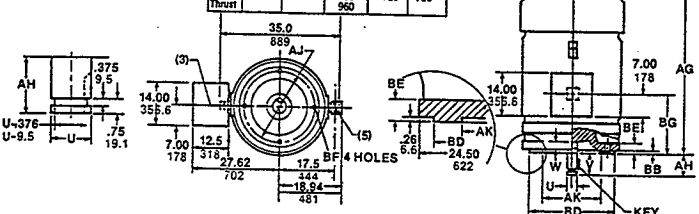

ABOVE NEMA 5010P — Dimensions in inches/millimeters

FRAME	RPM (MAX.)	U(2)	V	AG	AH	AJ	AK(1)	BB	BD	BE	BG	W	BF	KEY SQ.	KEY LGTH.	WT. (LBS/KG)
5010P 5610P	3600 3500	2.375 60.33	6.75 171	62.5 1587	6.75 171	14.75 374	13.500 343	.26 6.4	20.00 508	1.75 45	17.94 456	4.44 113	.687 18	.625 15.88	4.00 102	6200 2360
5010P 5010P	1800 1800	3.375 85.73	6.75 171	62.5 1587	6.75 171	14.75 374	13.500 343	.26 6.4	20.00 508	1.75 45	17.94 456	4.44 113	.687 18	.875 22.23	5.0 127	6200 2360

(1) This Dimension Varies +.005 -.000 - 13, - 00
(2) This Varies +.000, -.001. - 00, - 03
(3) Customer to drill hole in Conduit Box.
(4) Face Runout and Eccentricity .007 (.18 mm) max. T.I.R.
(5) 3/4 N.P.T. for space heater leads.

Conduit Box can be rotated 360° in 90° steps.
If mounting clearance details are required, consult factory.
Maximum permissible shaft runout when measured at end of std. shaft extension is .003 (.08 mm) T.I.R.

MAXIMUM FULL LOAD AMPERES	AA (4X6) PIPE TAP*
201	4
335	5
600	6

* On 5010P frame, customer to drill hole in

HNF-2466, Rev.0

(NEW PUMP IN TANK) AS # 6/6

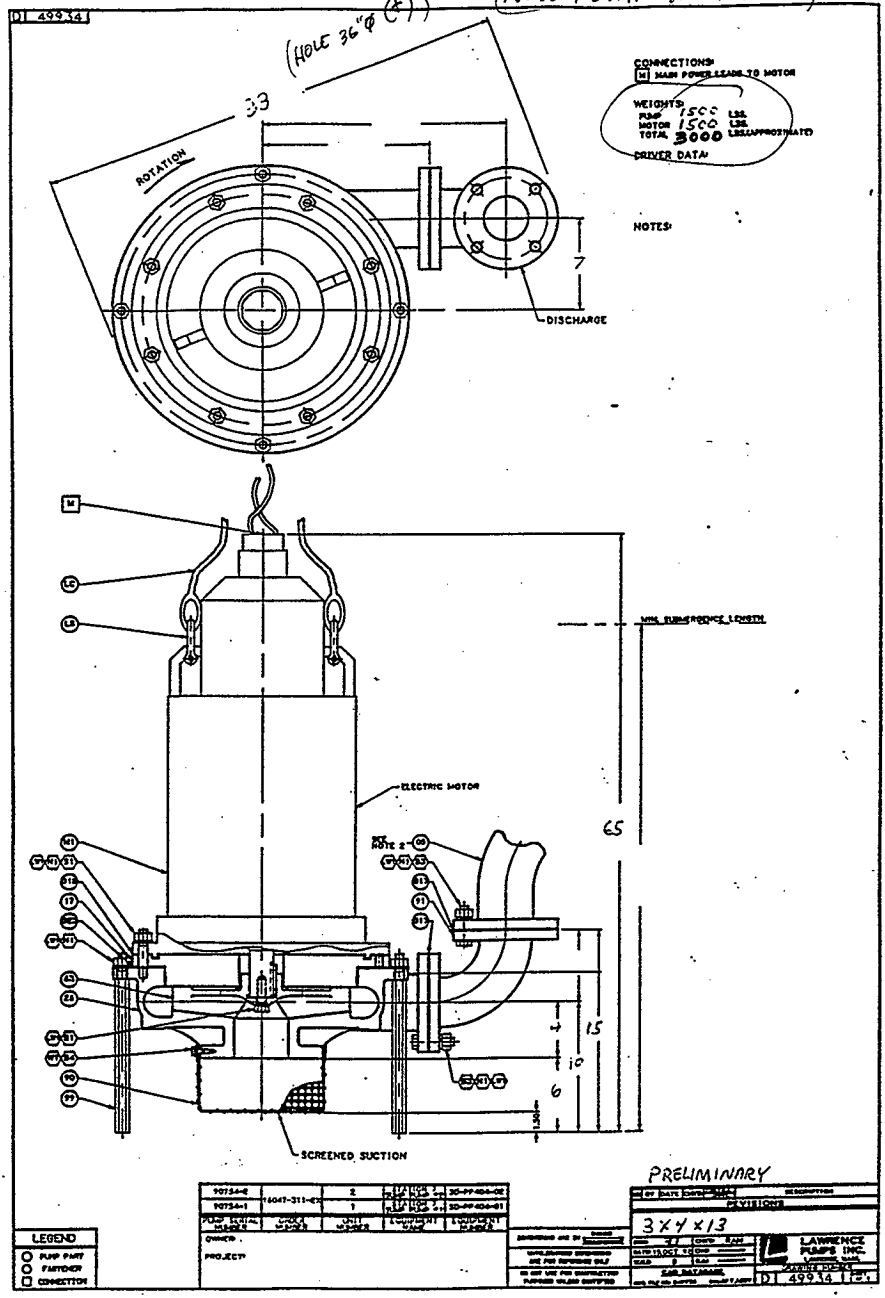

DISTRIBUTION SHEET

To	From	Page 1 of 1
Distribution	JW Bailey	Date 19 July 1998
Project Title/Work Order		EDT No. 622224
Project W-320 Tank 106-C, HNF-2466, Civil/Structural Calculations, Vol. 6		ECN No. n/a

Name	MSIN	Text With All Attach.	Text Only	Attach./ Appendix Only	EDT/ECN Only
JW Bailey	S2-48				
W-320 Project Files	R1-29				