JUL 2 4 1998
Sta. 4 58

ENGINEERING DATA TRANSMITTAL

1. EDT 622223

2. To: (Receiving Organization)	3. From: (Originating Organization)	4. Related EDT No.:
Distribution	TWRS Projects/SST Retrieval	n/a
5. Proj./Prog./Dept./Div.: D2991 W-320 TWRS/TCPN # ~~D2MA1~~	6. Design Authority/ Design Agent/Cog. Engr.: JW Bailey, NHC	7. Purchase Order No.: n/a
8. Originator Remarks: For approval and release of a new supporting document. This document has been generated to ensure retrievability of the Project W-320 "Civil/Structural Calculations, Vol. 5".		9. Equip./Component No.: n/a
		10. System/Bldg./Facility: 241-C-106
11. Receiver Remarks: 11A. Design Baseline Document? [X] Yes [ ] No		12. Major Assm. Dwg. No.: n/a
		13. Permit/Permit Application No.: n/a
		14. Required Response Date:

15. DATA TRANSMITTED

(A) Item No.	(B) Document/Drawing No.	(C) Sheet No.	(D) Rev. No.	(E) Title or Description of Data Transmitted	(F) Approval Designator	(G) Reason for Transmittal	(H) Originator Disposition	(I) Receiver Disposition
1	HNF-2465	-	0	Project W-320, 241-C-106 Sluicing, Civil/Structural Calculations, Vol. 5	NA			-

16. KEY

Approval Designator (F)	Reason for Transmittal (G)	Disposition (H) & (I)
E, S, Q, D or N/A (see WHC-CM-3-5, Sec.12.7)	1. Approval 4. Review 2. Release 5. Post-Review 3. Information 6. Dist. (Receipt Acknow. Required)	1. Approved 4. Reviewed no/comment 2. Approved w/comment 5. Reviewed w/comment 3. Disapproved w/comment 6. Receipt acknowledged

17. SIGNATURE/DISTRIBUTION
(See Approval Designator for required signatures)

(G) Reason	(H) Disp.	(J) Name	(K) Signature	(L) Date	(M) MSIN	(G) Reason	(H) Disp.	(J) Name	(K) Signature	(L) Date	(M) MSIN
2	1	Design Authority JW Bailey	JW Bailey	7/10/98	S2-48						
		Design Agent	MC Davenport	7/9/98							
2	1	Cog.Eng. JCS Graves	Graves		S2-48						
2	1	Cog. Mgr JW Bailey	JW Bailey	7/10/98	S2-48						
		QA									
		Safety									
		Env.									

18. MC Davenport ~~C.E. Graves~~ ~~7/24/98~~ 7/9/98
Signature of EDT Originator — Date

19. _____ _____
Authorized Representative for Receiving Organization — Date

20. JW Bailey 7/10/98 ~~3/24/98~~
Design Authority/ Cognizant Manager — Date

21. DOE APPROVAL (if required) Ctrl. No.
[ ] Approved
[ ] Approved w/comments
[ ] Disapproved w/comments

BD-7400-172-2 (05/96) GEF097

Project W-320, 241-C-106 Sluicing Civil/Structural Calculations, Vol. 5

John W. Bailey
Numatec Hanford Co., Richland, WA 99352
U.S. Department of Energy Contract DE-AC09-96RL13200

EDT/ECN: 622223 UC: 506
Org Code: 8C452 Charge Code: D2991/HANA0600
B&R Code: EW3130010 Total Pages: 240

Key Words: W-320, Sluicing, Tank 241-C-106, Tank 241-AY-102, WRSS, calculations, civil/structural.

Abstract: This supporting document has been prepared to make the FDNW calculations for Project W-320, readily retrievable.

TRADEMARK DISCLAIMER. Reference herein to any specific commercial product, process, or service by trade name, trademark, manufacturer, or otherwise, does not necessarily constitute or imply its endorsement, recommendation, or favoring by the United States Government or any agency thereof or its contractors or subcontractors.

Printed in the United States of America. To obtain copies of this document, contact: Document Control Services, P.O. Box 950, Mailstop H6-08, Richland WA 99352, Phone (509) 372-2420; Fax (509) 376-4989.

Release Approval 7/24/98
Date

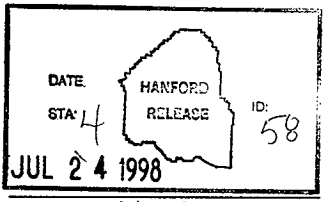

Release Stamp

Approved for Public Release

Project W-320, 241-C-106 Sluicing Civil/Structural Calculations, Vol. 5

TABLE OF CONTENTS

Calc. No.	Title	Page
W320-24-011	Pump Pit C-06A Analysis and Cover Block Design	A-i
W320-24-013	Sluice Pit C-06C Analysis of the Pit Wall	B-i
W320-24-014	Process Building and Equipment Skid Foundation	C-i

W320-24-011

Pump Pit C-06A Analysis and Cover Block Design

INTEROFFICE MEMORANDUM

TO C. B. Organ E6-01
Design Verification Officer

DATE September 15, 1995

FROM G. L. Hopkins G3-17

COPIES TO R. W. Davidson S3-07
M. A. Haq G3-17
M. B. Lasota S2-47
M. S. Ruben E6-46
Eng Doc Control G3-11

JOB NO. ER4319

SUBJECT STRUCTURAL ANALYSIS

REFERENCES 1. Design Calculation Number W320-24-011
2. H-2-818448, Shts 1, 2, 3, 4, and 5

This memo and attached form KEH 1980.00 (06/91) are in response to your IOM of February 9, 1995, to perform a design verification for the subject project. This design verification is in accordance with "Design Review Method" as define by ICF Kaiser (ICF KH) procedure ES 7, Rev. 3, Section 6.2.

Responses to the questions of Section 6.2.1.4 of procedure ES 7 are as follows:

1) Were the design inputs correctly selected?

YES This conclusion is based on the review of the following document: FDC, WHC-SD-W320-FDC-001, Rev 2, "Tank 241-C-106 Sluicing, Definitive Design." .

2) Were all necessary conditions considered in the design?

YES

3) Are required assumptions adequately described? Are sources identified reasonable for the design?

YES

4) Was appropriate design method used?

YES

5) Where necessary, are the assumptions reverified when the design is complete?

YES

6) Were the design inputs correctly incorporated?

YES

7) Is the design output reasonable compared to the design input?

YES

8) Are necessary design input and verification requirements for interfacing organizations specified in design documents or in supporting procedures or instructions?

YES

9) Was the applicable Hanford Plant Standards (HPS) followed? If not, is documented approval included from DOE-RL?

YES SDC 4.1, Rev. 12 was followed.

ICF KAISER HANFORD COMPANY	CALCULATION IDENTIFICATION AND INDEX	Page *i* of *iii* Date: *09/14/1995*

This sheet shows the status and description of the attached Design Analysis sheets.

Discipline *Structural* WO/Job No. *ER 4319/W320* Calculation No. *W320-24-011*

Project No. & Name *W320 Tank 241-C-106 Sluicing*

Calculation Item *Pump Pit C-06A Analysis and Cover Block Design*

These calculations apply to:

Dwg. No. *H-2-818448 shts 1,2,3,4 and 5* Rev. No. *0/0/0/0/0*

Dwg. No. *H-2-41343* Rev. No. 3

Other (Study, CDR) N/A Rev. No. *N/A*

The status of these calculations is:

[] Preliminary Calculations

[X] Final Calculations

[] Check Calculations (On Calculation Dated)

[] Void Calculation (Reason Voided)

Incorporated in Final Drawings? [X] Yes [] No

This calculation verified by independent "check" calculations? [] Yes [X] No

Original and Revised Calculation Approvals:

	Rev. 0 Signature/Date	Rev. 1 Signature/Date	Rev. 2 Signature/Date
Originator	*Michael B. Lasota 09/14/1995*	*Michael B. Lasota 3/8/96*	
Checked by	*Michael R. Custer 09/14/1995*	*Ronald W. Davidson*	
Approved by	*Ronald W. Davidson 09/14/1995*		
Checked Against Approved Vendor Data			

INDEX

Design Analysis Page No.	Description
1	*Objectives*
1	*Criteria and assumptions*
3	*Computer Analysis - description*
3	*References*
3 to 39	*Calculations*
21 and 36	*Conclusions*
18 pages+cover	*Attachment 1 - Modal analysis - computer printout.*
81 pages+cover	*Attachment 2 - Static analysis of the Pit Wall - computer printout.*
30 pages+cover	*Attachment 3 - Analysis of the computer results.*
4 pages+cover	*Attachment 4 - Nozzle and Jumper load sheets.*

DESIGN VERIFICATION RECORD

Project/Document Number W320/ W320-24-011 REVO, PUMP PIT C-06A ANALYSIS AND COVER BLOCK DESIGN

Prepared By G.L. HOPKINS (Print) ; _____ (Print) ; _____ (Print)

Verifier Name G.L. HOPKINS (Print) Initial GLH Date _____

Verifier Name _____ (Print) Initial _____ Date _____

Verifier Name _____ (Print) Initial _____ Date _____

Formal Design Verification is determined to be necessary per the Design Verification Screening Criteria and was performed by the following method(s).

1. Alternate Calculation Method YES (NO) *(Circle One)*
   Calculation Number _____ Revision _____
2. Testing Method YES (NO) *(Circle One)*
   Test Number _____ Revision _____
   Test Title _____
3. Identical Method YES (NO) *(Circle One)*
   Document Number _____ Revision _____
   Title _____ Date _____
4. Design Review Method (YES) NO *(Circle One)*
   Design Review Chairman G.L. HOPKINS
   Finding or Attached Memo Report Number SEE ATTACHED TOM OF 9-15-95 FROM G.L. HOPKINS TO CB ORGAN.
   _____ Date 9-15-95

Formal design verification is complete and acceptable:

Design Verification Officer CB Organ Date 9/15/95

ATTACH ALL DOCUMENTATION RELATED TO THE DESIGN VERIFICATION CONDUCTED.

ICF KAISER HANFORD COMPANY	CALCULATION IDENTIFICATION AND INDEX Continuation Sheet	Page *ia* of *iii* Date 3/8/96

Discipline *Structural* WO/Job No. *ER 4319/W320* Calculation No. *W320-24-011*

	Rev. 0 Signature/Date	Rev. 1 Signature/Date	Rev. 2 Signature/Date
Originator	*Michael B. Lasota 09/14/1995*	*Michael B. Lasota 3/8/96*	
Checked by	*Michael R. Custer 09/14/1995*	*Ronald W. Davidson 3/8/96*	

INDEX

Design Analysis Page No.	Description

Revision No.	Description
0	*Initial issue*
1	Revised shts 21,30,31 & 32;added shts ia, 27a-27k & 37a;replaced sht 27
I	**ADDED P. 1a & 2a in ATTMT 4**

CALCULATION CROSS INDEX (Typical)

Subject Calculation No. W320-24-011

Page ii of iii

Subject Calculation Revision No.	Superceded by Calculation No.	These interfacing calculation/documents provide input to the subject calculation, and if revised may require revision of the subject calculation.		Results and conclusions of the subject calculation are used in these interfacing calculations and/or documents.		Does the output interface calculation/ documents require revision?		Has the output interface calculation/ documents been revised?		Discipline manager's signature and date indicating evaluation complete.
		Calculation/Document No.	Revision No.	Calculation/Document No.	Revision No.	Yes	No	Yes	No	
0		H-2-41343	3	W320-24-013	0					[signature] 9/14/95
				H-2-818448 1 OF 5	0					
				H-2-818448 2 OF 5	0					
				H-2-818448 3 OF 5	0					
				H-2-818448 4 OF 5	0					
				H-2-818448 5 OF 5	0					

DESIGN VERIFICATION SCREENING CRITERIA

Project/Document No. W320-24-011

When the design or design change affects hardware, formal design verification must be performed if one or more of the following questions must be answered affirmatively (YES).

YES	NO		
✓		1.	Does the design or design change involved meet the established criteria to be considered Safety Class 1 or 2?
	✓	2.	Does this design or design change cause or permit changes to Safety Class 1 or 2 instrument or alarm setpoints outside of previously approved operational limits?
	✓	3.	Does this design or design change significantly affect the nuclear safety consequences of a malfunction or failure of the structure, system, or component?
	✓	4.	Does this design or design change involve or change design that has previously undergone formal design verification?

Assigned Lead Engineer — Date: 9/14/95

Responsible Discipline Manager — Date: 9/14/95

Original Design Package Distribution:
- Project Engineer
- Chief Design Engineer
- Engineering Document Control

Design Change Distribution:
- Attach to Engineering Change Notice

DESIGN VERIFICATION SCREENING CRITERIA

Project/Document No. Calculation W320-29-011, Rev. 1. (Rev 1 changes only)

When the design or design change affects hardware, independent design verification must be performed if one or more of the following questions must be answered affirmatively (YES).

Revision 1 revised the coverblock design (SC3) and incorporated final piping loads which did not change the original analysis. See conclusion on page 21.

YES	NO	
____	✓	1. Does the design or design change involved meet the established criteria to be considered Safety Class?
____	✓	2. Does this design or design change cause or permit changes to Safety Class instrument or alarm setpoints outside of previously approved operational limits?
____	✓	3. Does this design or design change significantly affect the nuclear or environmental safety consequences of a malfunction or failure of the structure, system, or component?
____	✓	4. Does this design or design change involve or change design that has previously undergone formal design verification?

Ann A. Langevin — Assigned Lead Engineer — 4/16/98 — Date

J. Mosmith PLE — Engineering Manager — 4/21/98 — Date

Original Design Package Distribution:
- Project Manager
- Engineering Manager
- Technical Document Control

Design Change Distribution:
- Attach to Design Change Notice

KAISER ENGINEERS HANFORD

Calc. No. W320-24-011
Revision 0
Page No. 1 of

DESIGN ANALYSIS

Client WHC
Subject Pump Pit C-06A Analysis and Cover Block Design.
Location 241-CR-06A - Pump Pit

WO/Job No. ER 4319
Date 09/01/1995
Checked 9/13/95
Revised N/A

By M. B. Lasota
By M. R. Custer
By N/A

1. OBJECTIVES

The purpose of this evaluation is to determine whether original design of existing walls at 241-C-106 Pump Pit is adequate to accommodate the new pipe loads, jumper loads, seismic loads and also existing soil loads without affecting the structural integrity of the pit. The loads will be divided into five load cases: Dead Load, including cover weight -D, Live Load in terms of overburden pressure -L, Load resulting from lateral earth pressure -H, Earthquake Load, including amplified self weight, amplified weight of the cover blocks and dynamic earth pressure resulting from Design Bases Earthquake -E, and the Load resulting from the equipment penetrating and supported by the Pit Wall $-R_o$. The eleven load combinations recommended in the reference 5, will be considered to determine the worst condition. These pit walls will be analyzed as the worst case at 241-C-106 Tank.
The cover blocks will also be evaluated for adequate reinforcement for equipment weight, self weight, snow and ash loads, seismic loads and hole penetrations.

2. CRITERIA AND ASSUMPTIONS

DESIGN CRITERIA

Functional Design Criteria WHC-SD-W320-FDC-001, REV. 2 for Tank 241-C-106 Waste Retrieval Project, W-320.
The criteria for evaluation of pit walls is outlined in SDC 4.1 Rev 11.
The walls and cover blocks will be analyzed as Safety Class 1 structures.

METHODS

MATHCAD 4.0 (A474) was used for load case calculations, modulus of elasticity calculations and evaluation of the pit walls.
IMAGES 3D Rev 2.0 was used for analysis of the pit walls.
MICROSOFT EXCEL was used to determine extreme values of the stress from the output of Images 3D run where the load combination was used.

ASSUMPTIONS

1. Due to relatively small overall dimensions of the pit, and a thick (18" minimum) reinforced concrete walls, rigid response of the pit is assumed. As a consequence the ground acceleration is used as a seismic input. The results from Attachment 1 will demonstrate validity of this assumption.

KAISER ENGINEERS HANFORD

Calc. No. W320-24-011
Revision 0
Page No. 2 of

DESIGN ANALYSIS

Client WHC
Subject Pump Pit C-06A Analysis and Cover Block Design.
Location 241-CR-06A - Pump Pit

WO/Job No. ER 4319
Date 09/01/1995 By M. B. Lasota
Checked 9/13/95 By M. R. Custer
Revised N/A By N/A

3. COMPUTER ANALYSIS.

Computer software used for the analyses of the Pit Wall is: Revision 2 of the Interactive Microcomputer Analysis of General Elastic Structures - IMAGES - by Celestial Software. Due to the nature of the problem - the reinforced concrete wall with different amount of reinforcing steel in vertical and horizontal directions - the need for the plate element with orthotropic material properties is apparent. The revision 2 of IMAGES, however does not offer selection of such material. In order to utilize the available software, the element elastic properties in both horizontal and vertical directions will be averaged. As a consequence, the resulting moments in vertical direction will be slightly overestimated whereas moments in horizontal direction will be slightly underestimated. The analysis of the wall will also simplify the behavior of the wall. The wall elements will be modeled as cracked section, in spite of the fact that some areas of the wall will remain uncracked, thus decreasing plate stiffness. The effect of such simplification on the stress is not significant, however it will underestimate the natural frequency of the wall.

4. REFERENCES

1. SDC-4.1 "Standard Arch-civil Design Criteria, Design Loads for Facilities", Rev 11, 9-6-89.
2. "Uniform Building Code", 1994.
3. ASCE 7-93, "Minimum Design Loads for Buildings and Other Structures".
4. ACI 318-89, rev'd 1992, "Building Code Requirements for Reinforced Concrete".
5. ACI 349-90, "Code Requirements for Nuclear Safety Related Concrete Structures".
6. ASCE 4-86, "Seismic Analysis of Safety Related Nuclear Structures", Sep 1986.
7. Wang and Salmon, "Reinforced Concrete Design", 3rd Edition.
8. NUREG-0800, U.S. Nuclear Regulatory Commission Standard Review Plan, 3.7.2-"Seismic System Analysis", Rev. 1 - Jul 1981.
9. UCRL-15910, "Design and Evaluation Guidelines for Department of Energy Facilities Subjected to Natural Phenomena Hazards", June 1990.
10. Shannon and Wilson Inc., "Final Report of Geotechnical Engineering Studies, W 320 Waste Retrieval and Sluicing Systems, 200 East Area, Hanford Site", April 1994.
11. US AEC Regulatory Guide, 1.61, October 1973.

ICF KAISER HANFORD COMPANY

DESIGN ANALYSIS

Calc. No.: *W320-24-011*
Revision: *0*
Page No. 3 of

Client: *WHC*
Subject: *Pump Pit C-06A Analysis and Cover Block Design.*
Location: *Tank 241-C-106, Pump Pit.*

WO/Job No.: *W320/ER4319*
Date: *08/22/1995* By: *M.B. Lasota* MBL
Checked 9/13/95 By: *M.R. Custer* MRC
Revised By

An evaluation will be performed on the east wall of the pump pit. This wall is receiving the load from the new transfer line and drain line, the thickness of the wall is the smallest, (north and south walls, although longer, have increased thickness at the crown of the Pit, increasing wall strength) and necessity of the core drill was the basis to declare east wall to be the most critical wall of the Pump Pits.

The existing walls are Safety Class 1 therefore this analysis on the walls must be equivalent. An equivalent static evaluation will be used in lieu of a dynamic anlysis for a simplified but conservative approach. For the equivalent static force method use a 1.5 coefficient for the seismic loads (REF 9). This factor will be applied in the static analysis (Attachment 2) when load factors are used to combine plate stresses. The factor is applied there to increase all seismic forces by 1.5 coefficient. Since the concrete pit is a rigid unit (see Attachment 1 this calc), the peak ground response of 0.2g will be used for the pit. Since the cover blocks are not rigidly attached to the pit, the peak response spectra acceleration at 7% damping was used.

From the reference 10. the mechanical properties of the Tank backfil are as follows:

Dynamic soil properties are:

$\gamma := 132 \cdot pcf \quad \phi := 40 \cdot deg \quad \nu := 0.25 \quad V_s := 1300 \cdot \frac{ft}{sec} \quad V_p := 2300 \cdot \frac{ft}{sec}$

$E_1 := 115 \cdot ksi \quad G_1 := 46 \cdot ksi \quad \text{for} \quad \varepsilon := 10^{-6}$

$E_2 := 40 \cdot ksi \quad G_2 := 16 \cdot ksi \quad \text{for} \quad \varepsilon := 10^{-3}$

Static soil properties are:

$\gamma := 132 \cdot pcf \quad \phi := 40 \cdot deg \quad \delta := 0.83 \quad K_a := 0.22 \quad K_o := 0.36$

$K_p := 4.60 \quad K_{ae} := 0.26 \quad K_{pe} := 3.68$

ICF KAISER HANFORD COMPANY

DESIGN ANALYSIS

Calc. No.: W320-24-011
Revision: 0
Page No. 4 of

Client: WHC
Subject: Pump Pit C-06A Analysis and Cover Block Design.
Location: Tank 241-C-106, Pump Pit.

WO/Job No.: W320/ER4319
Date: 08/23/1995 By: M.B. Lasota MBL
Checked 9/13/95 By: M.R. Custer MRC
Revised By

PUMP PIT EAST WALL ANALYSIS

Load Case 1 -Dead Weight, D

Dead weight of the wall will be generated by computer on the basis that the concrete density $\gamma = 150$ pcf.
The weight of cover blocks will be modeled as uniformly distributed load applied at the transition line between 12.5" and 18" thick walls. The magnitude of that load is as follows:

$l := 163 \cdot in$ $W_{ecb} := 27709.68 \cdot lbf$ $e := \frac{1.5 \cdot ft - 3 \cdot in}{2}$ $e = 7.5 \cdot in$

$w_{ecb} := \frac{0.5 \cdot W_{ecb}}{l}$ $w_{ecb} = 85 \cdot \frac{lbf}{in}$ $m_{ecb} := w_{ecb} \cdot e$ $m_{ecb} = 637.49 \cdot \frac{lbf \cdot in}{in}$

Load Case 2 - Live Load, L

Overburden Pressure

Total maximum Tank Surcharge is: $W := 200000 \cdot lbf$

In terms of the uniformly distributed Load on Tank

$r := 37.5 \cdot ft$ $A_{tank} := \pi r^2$ $A_{tank} = 4417.86 \cdot ft^2$ $p := \frac{W}{A_{tank}}$ $p = 45.27 \cdot psf$

Use $p := 50 \cdot psf$ $p_o := p \cdot K_o$ $p_o = 0.12 \cdot psi$

Load Case 3 -Lateral Earth Pressure, H (REF 7, pg. 452)

$H := 7.42 \cdot ft$ $\gamma := 132 \cdot pcf$ $K_o := 0.36$ (REF 11, TBL 2)

$p := K_o \cdot \gamma H$ $p = 352.6 \cdot psf$ use $p := 355 \cdot psf$ $p = 2.47 \cdot psi$

Load Case 4 -Seismic Load, E_{ss}

-Seismic Inertia Load - amplified self weight

The wall is subjected to the horizontal and vertical accelerations.

$a_h := 0.2$ $a_v := \frac{2}{3} \cdot a_h$ $a_v = 0.133$

-Seismic Load Soil Pressure (REF 6, pg.38)

$a_h := 0.2$ $C_v := (0.87 + 0.94) \cdot 0.5$ $C_v = 0.91$ For Poisson's ratio = 0.25

$H := 7.42 \cdot ft$ $\gamma := 132 \cdot pcf$ (REF 11, TBL 2)

$F_r := a_h \cdot C_v \cdot \gamma \cdot H^2$

$F_r = 1.32 \cdot \frac{kips}{ft}$ $F_r = \frac{p_e \cdot H}{2}$ $p_e := \frac{2 \cdot F_r}{H}$ $p_e = 354.56 \cdot psf$ use $p_e := 355 \cdot psf$

$p_e = 2.47 \cdot psi$

Client: WHC
Subject: Pump Pit C-06A Analysis and Cover Block Design.
Location: Tank 241-C-106, Pump Pit.

WO/Job No.: W320/ER4319
Date: 08/23/1995 By: M.B. Lasota
Checked 9/13/95 By: M.R. Custer
Revised By

Seismic Cover Block Load

Weight of Cover Blocks (See pg 16 and 17)

$a_{hcv} := 0.38$ $a_{vcb} := \frac{2}{3} \cdot a_{hcv}$

Peak Response Spectrum Acceleration (REF 1, pg. 23) @ 7% of Critical Damping (REF 11)

$a_{vcb} = 0.25$

$w_v := w_{ecb} \cdot a_{vcb}$ $w_v = 21.53 \cdot \frac{lbf}{in}$ $m_v := w_v \cdot e$ $m_v = 161.5 \cdot \frac{lbf \cdot in}{in}$

Horizontal seismic loads from the cover blocks will be disregarded since the combination of the self weight, seismic soil pressure, lateral earth pressure, overburden pressure and pipe and jumper loads are more conservative than the combination of the reactive earth pressure and the horizontal cover block loads during a seismic event. The wall acts as a plate clamped on three sides and free on the top under soil and pipe loads which is also more conservative than the wall acting as a plate clamped on three sides and pinned on the other side under the cover block loads and reactive earth pressure.

Load Case 5 -Operating Equipment Loads, R_o.

Load at node 91:

$F_{xp} := -7500 \cdot lbf$	$F_{xj} := 0 \cdot lbf$	$F_{x91} := F_{xp} + F_{xj}$	$F_{x91} = -7500 \cdot lbf$
$F_{yp} := 7500 \cdot lbf$	$F_{yj} := 0 \cdot lbf$	$F_{y91} := F_{yp} + F_{yj}$	$F_{y91} = 7500 \cdot lbf$
$F_{zp} := 0 \cdot lbf$	$F_{zj} := 0 \cdot lbf$	$F_{z91} := F_{zp} + F_{zj}$	$F_{z91} = 0 \cdot lbf$
$M_{xp} := -19000 \cdot lbf \cdot in$	$M_{xj} := 0 \cdot lbf \cdot in$	$M_{x91} := M_{xp} + M_{xj}$	$M_{x91} = -19000 \cdot lbf \cdot in$
$M_{yp} := 19000 \cdot lbf \cdot in$	$M_{yj} := 0 \cdot lbf \cdot in$	$M_{y91} := M_{yp} + M_{yj}$	$M_{y91} = 19000 \cdot lbf \cdot in$
$M_{zp} := 0 \cdot lbf \cdot in$	$M_{zj} := 0 \cdot lbf \cdot in$	$M_{z91} := M_{zp} + M_{zj}$	$M_{z91} = 0 \cdot lbf \cdot in$

Load at node 175:

$F_{xp} := -617 \cdot lbf$	$F_{xj} := -7214 \cdot lbf$	$F_{x175} := F_{xp} + F_{xj}$	$F_{x175} = -7831 \cdot lbf$
$F_{yp} := 142 \cdot lbf$	$F_{yj} := 627 \cdot lbf$	$F_{y175} := F_{yp} + F_{yj}$	$F_{y175} = 769 \cdot lbf$
$F_{zp} := 10909 \cdot lbf$	$F_{zj} := 2555 \cdot lbf$	$F_{z175} := F_{zp} + F_{zj}$	$F_{z175} = 13464 \cdot lbf$
$M_{xp} := -4848 \cdot lbf \cdot in$	$M_{xj} := -11052 \cdot lbf \cdot in$	$M_{x175} := M_{xp} + M_{xj}$	$M_{x175} = -15900 \cdot lbf \cdot in$
$M_{yp} := 17256 \cdot lbf \cdot in$	$M_{yj} := 1536 \cdot lbf \cdot in$	$M_{y175} := M_{yp} + M_{yj}$	$M_{y175} = 18792 \cdot lbf \cdot in$
$M_{zp} := 2412 \cdot lbf \cdot in$	$M_{zj} := 49056 \cdot lbf \cdot in$	$M_{z175} := M_{zp} + M_{zj}$	$M_{z175} = 51468 \cdot lbf \cdot in$

M_{x175} in computer analysis was inadvertenly used as -15904 lbf in, also M_{z175} was used as 51336 lbf in. Both figures are sufficiently close to conclude that the results of the analysis are acceptable.

ICF KAISER HANFORD COMPANY

DESIGN ANALYSIS

Calc. No.: *W320-24-011*
Revision: *0*
Page No. *6* of

Client: *WHC*
Subject: *Pump Pit C-06A Analysis and Cover Block Design.*
Location: *Tank 241-C-106, Pump Pit.*

WO/Job No.: *W320/ER4319*
Date: *08/28/1995* By: *M.B. Lasota*
Checked *9/13/95* By: *M.R. Custer*
Revised By

Due to lack of data from piping discipline for 2" sch 40 ASTM A105 drain pipe, the plastic moments and plastic shear will be assumed.

The mechanical properties of the ASTM A105 steel are:

$F_y := 36000 \cdot psi$ $F_u := 70000 \cdot psi$

Pipe geometry is:

$ID := 2.067 \cdot in$ $t_w := 0.154 \cdot in$ $OD := ID + 2 \cdot t_w$ $OD = 2.375 \cdot in$

Pipe plastic properties are:

$$Z := \frac{OD^3}{6} \cdot \left[1 - \left(1 - \frac{2 \cdot t_w}{OD} \right)^3 \right] \quad Z = 0.76 \cdot in^3 \quad M_p := F_y \cdot Z \quad M_p = 27391.5 \cdot lbf \cdot in$$

$$A := \frac{\pi}{4} \cdot \left(OD^2 - ID^2 \right) \quad A = 1.07 \cdot in^2 \quad A_v := \frac{A}{2} \quad A_v = 0.54 \cdot in^2 \quad V_p := A_v \cdot \frac{F_y}{\sqrt{3}} \quad V_p = 11166.86 \cdot lbf$$

Assuming the plastic moment and shear are distributed equaly, between vertical and horizontal directions:

$M_x := \frac{M_p}{\sqrt{2}}$ $M_x = 19368.71 \cdot lbf \cdot in$ Use $M_x := 19000 \cdot lbf \cdot in$

$M_y := M_x$ $M_y = 19000 \cdot lbf \cdot in$

$V_x := \frac{V_p}{\sqrt{2}}$ $V_x = 7896.16 \cdot lbf$ Use $V_x := 7500 \cdot lbf$

$V_y := V_x$ $V_y = 7500 \cdot lbf$

ICF KAISER HANFORD COMPANY

DESIGN ANALYSIS

Client: WHC
Subject: Pump Pit C-06A Analysis and Cover Block Design.
Location: Tank 241-C-106, Pump Pit.

WO/Job No.: W320/ER4319
Date: 08/15/1995 By: M.B. Lasota MBL
Checked 9/13/95 By: M.R. Custer MRC
Revised By

Analysis of the Critical Pit Wall.

In order to utilize linear elastic analysis for the material such as reinforced concrete, there is a need to find the property of the cracked section of the plate. Using plates flexural rigidity, which includes modulus of elasticity, and retaining the plate thickness the final adjustment will be made to the concrete modulus of elasticity.
Upper wall rigidity with respect to the bending about vertical axis.

$f_c := 3000 \cdot psi$ $\nu := 0.15$ $E_s := 29000 \cdot ksi$ $E_c := 57000 \cdot (f_c \cdot psi)^{0.5}$ $E_c = 3122.019 \cdot ksi$

$d := 0.625 \cdot in$ $n := \frac{E_s}{E_c}$ $n = 9.289$ $A_{s4} := \frac{\pi \cdot d^2}{4} \cdot \frac{12}{14}$ $A_{s4} = 0.263 \cdot in^2$

Transformed steel area is:

Top: $A_{tt} := (n - 1) \cdot A_{s4}$ $A_{tt} = 2.180 \cdot in^2$

Bottom: $A_{bt} := n \cdot A_{s4}$ $A_{bt} = 2.443 \cdot in^2$

Property of upper, tapered portion of the wall (average).

$h := \frac{11 + 14}{2} \cdot in$ $h = 12.500 \cdot in$ $d_1 := 1.5 \cdot in + 0.5 \cdot \frac{5}{8} \cdot in$ $d_1 = 1.813 \cdot in$

$d_2 := h - d_1$ $d_2 = 10.688 \cdot in$ $b := 12 \cdot in$

Static moment about Neutral Axis equals to zero. The expression in terms of c is as follows:

Concrete compression zone:

$A_{cz} = b \cdot c$ $y_{cz} = \frac{c}{2}$ $Q_{cz} = A_{cz} \cdot y_{cz}$

by substitution, yields

$Q_{cz} = \frac{1}{2} \cdot b \cdot c^2$

Top steel:

$A_{ts} := A_{tt}$ $y_{ts} = c - d_1$ $Q_{ts} = A_{ts} \cdot y_{ts}$

by substitution, yields

$Q_{ts} = A_{tt} \cdot (c - d_1)$

Bottom steel:

$A_{bs} := A_{bt}$ $y_{bs} = c - d_2$ $Q_{bs} = A_{bs} \cdot y_{bs}$

by substitution, yields

$Q_{bs} = A_{bt} \cdot (c - d_2)$

$Q = Q_{cz} + Q_{ts} + Q_{bs}$

Client: WHC
Subject: Pump Pit C-06A Analysis and Cover Block Design.
Location: Tank 241-C-106, Pump Pit.

WO/Job No.: W320/ER4319
Date: 08/15/1995 By: M.B. Lasota
Checked 9/13/95 By: M.R. Custer
Revised By

by substitution, yields

$$Q = \frac{1}{2}\cdot b\cdot c^2 + A_{tt}\cdot(c - d_1) + A_{bt}\cdot(c - d_2)$$

$A_{tt} := 2.180\cdot in^2$ $A_{bt} := 2.443\cdot in^2$ $b := 12\cdot in$ $d_1 := 1.81\cdot in$ $d_2 := 10.688\cdot in$ $Q := 0$

$$Q = 6\cdot c^2 + 4.623\cdot c - 30.056584$$

by substitution, yields

$$0 = 6\cdot c^2 + 4.623\cdot c - 30.056584$$

has solution(s)

$$\begin{pmatrix} -2.6563396567873903878 \\ 1.8858396567873903878 \end{pmatrix} = \begin{pmatrix} -2.656 \\ 1.886 \end{pmatrix} \qquad c := 1.886\cdot in$$

Moment of inertia is:

$A_{cz} := b\cdot c$ $A_{cz} = 22.632\cdot in^2$ $y_{cz} := \frac{c}{2}$ $y_{cz} = 0.943\cdot in$ $I_{cz} := \frac{b\cdot c^3}{12} + A_{cz}\cdot y_{cz}^2$ $I_{cz} = 26.834\cdot in^4$

$A_{ts} := A_{tt}$ $A_{ts} = 2.180\cdot in^2$ $y_{ts} := c - d_1$ $y_{ts} = 0.076\cdot in$ $I_{ts} := A_{ts}\cdot y_{ts}^2$ $I_{ts} = 0.013\cdot in^4$

$A_{bs} := A_{bt}$ $A_{bs} = 2.443\cdot in^2$ $y_{bs} := c - d_2$ $y_{bs} = -8.802\cdot in$ $I_{bs} := A_{bs}\cdot y_{bs}^2$ $I_{bs} = 189.272\cdot in^4$

Cracked moment of inertia is:

$I_{cr} := I_{cz} + I_{ts} + I_{bs}$ $I_{cr} = 216.118\cdot in^4$ $I_{con} := \frac{b\cdot h^3}{12}$ $I_{con} = 1953.125\cdot in^4$

Equivalent modulus of elasticity for use in analysis is:

$$E_{eqh} := E_c\cdot\frac{I_{cr}}{I_{con}} \qquad E_{eqh} = 345.460\cdot ksi$$

ICF KAISER HANFORD COMPANY

DESIGN ANALYSIS

Calc. No.: *W320-24-011*
Revision: *0*
Page No. *9* of

Client: *WHC*
Subject: *Pump Pit C-06A Analysis and Cover Block Design.*
Location: *Tank 241-C-106, Pump Pit.*

WO/Job No.: *W320/ER4319*
Date: *08/15/1995* By: *M.B. Lasota* MBL
Checked *9/13/95* By: *M.R. Custer* MRC
Revised By

Upper wall rigidity with respect to the bending about horizontal axis.

5/8" Bar at 14" O.C. inside surface of the wall.
5/8" Bar at 7" O.C. outside surface of the wall.

$d := 0.625 \cdot in \quad A_{s5} := \frac{\pi \cdot d^2}{4} \cdot \frac{12}{14} \quad A_{s5} = 0.263 \cdot in^2 \quad A_{s6} := \frac{\pi \cdot d^2}{4} \cdot \frac{12}{7} \quad A_{s6} = 0.526 \cdot in^2$

Transformed steel area is:

Top: $A_{tt} := (n - 1) \cdot A_{s5} \quad A_{tt} = 2.180 \cdot in^2$

Bottom: $A_{bt} := n \cdot A_{s6} \quad A_{bt} = 4.885 \cdot in^2$

Property of upper, tapered portion of the wall (average).

$h := \frac{11 + 14}{2} \cdot in \quad h = 12.500 \cdot in \quad d_1 := 1.5 \cdot in + 0.5 \cdot \frac{5}{8} \cdot in \quad d_1 = 1.813 \cdot in$

$d_2 := h - d_1 \quad d_2 = 10.688 \cdot in \quad b := 12 \cdot in$

Static moment about Neutral Axis equals to zero. The expression in terms of c is as follows:

Concrete compression zone:

$A_{cz} = b \cdot c \quad y_{cz} = \frac{c}{2} \quad Q_{cz} = A_{cz} \cdot y_{cz}$

by substitution, yields

$Q_{cz} = \frac{1}{2} \cdot b \cdot c^2$

Top steel:

$A_{ts} := A_{tt} \quad y_{ts} = c - d_1 \quad Q_{ts} = A_{ts} \cdot y_{ts}$

by substitution, yields

$Q_{ts} = A_{tt} \cdot (c - d_1)$

Bottom steel:

$A_{bs} := A_{bt} \quad y_{bs} = c - d_2 \quad Q_{bs} = A_{bs} \cdot y_{bs}$

by substitution, yields

$Q_{bs} = A_{bt} \cdot (c - d_2)$

$Q = Q_{cz} + Q_{ts} + Q_{bs}$

by substitution, yields

$Q = \frac{1}{2} \cdot b \cdot c^2 + A_{tt} \cdot (c - d_1) + A_{bt} \cdot (c - d_2)$

ICF KAISER HANFORD COMPANY

DESIGN ANALYSIS

Calc. No.: *W320-24-011*
Revision: *0*
Page No. *10* of

Client: *WHC*
Subject: *Pump Pit C-06A Analysis and Cover Block Design.*
Location: *Tank 241-C-106, Pump Pit.*

WO/Job No.: *W320/ER4319*
Date: *08/15/1995* By: *M.B. Lasota* MBL
Checked *9/13/95* By: *M.R. Custer* MRC
Revised By

$A_{tt} := 2.180 \cdot in^2 \quad A_{bt} := 4.885 \cdot in^2 \quad b := 12.000 \cdot in \quad d_1 := 1.8125 \cdot in \quad d_2 := 10.6875 \cdot in \quad Q := 0$

$$Q = \frac{1}{2} \cdot b \cdot c^2 + A_{tt} \cdot (c - d_1) + A_{bt} \cdot (c - d_2)$$

by substitution, yields

$$Q = 6.0 \cdot c^2 + 7.065 \cdot c - 56.1596875$$

by substitution, yields

$$0 = 6.0 \cdot c^2 + 7.065 \cdot c - 56.1596875$$

has solution(s)

$$\begin{pmatrix} -3.7042875907163544713 \\ 2.5267875907163544713 \end{pmatrix} = \begin{pmatrix} -3.704 \\ 2.527 \end{pmatrix} \qquad c := 2.527 \cdot in$$

Moment of inertia is:

$A_{cz} := b \cdot c \quad A_{cz} = 30.324 \cdot in^2 \quad y_{cz} := \frac{c}{2} \quad y_{cz} = 1.264 \cdot in \quad I_{cz} := \frac{b \cdot c^3}{12} + A_{cz} \cdot y_{cz}^2 \quad I_{cz} = 64.547 \cdot in^4$

$A_{ts} := A_{tt} \quad A_{ts} = 2.180 \cdot in^2 \quad y_{ts} := c - d_1 \quad y_{ts} = 0.715 \cdot in \quad I_{ts} := A_{ts} \cdot y_{ts}^2 \quad I_{ts} = 1.113 \cdot in^4$

$A_{bs} := A_{bt} \quad A_{bs} = 4.885 \cdot in^2 \quad y_{bs} := c - d_2 \quad y_{bs} = -8.161 \cdot in \quad I_{bs} := A_{bs} \cdot y_{bs}^2 \quad I_{bs} = 325.311 \cdot in^4$

Cracked moment of inertia is:

$I_{cr} := I_{cz} + I_{ts} + I_{bs} \quad I_{cr} = 390.970 \cdot in^4 \quad I_{con} := \frac{b \cdot h^3}{12} \quad I_{con} = 1953.125 \cdot in^4$

Equivalent modulus of elasticity for use in analysis is:

$$E_{eqv} := E_c \cdot \frac{I_{cr}}{I_{con}} \qquad E_{eqv} = 624.956 \cdot ksi$$

The IMAGES 3D version 2 program does not have option to model orthotropic plate element. In order to accommodate this shortfall of the program the average modulus of elasicity will be used. As a consequece the horizontal plate moments will be somewhat overestimated while vertical plate moment will be underestimated.

$$E_{eq} := \frac{E_{eqh} + E_{eqv}}{2} \qquad E_{eq} = 485.208 \cdot ksi$$

In the computer analysis the value of the E_{eq} of 606.676 ksi was used. The influence of the use of the actual value of the modulus of elasticity on the distribution of the stress in the plate however, is not significant.

Lower wall rigidity with respect to the bending about vertical axis.

$f_c := 3000 \cdot psi$ $\quad \nu := 0.15$ $\quad E_s := 29000 \cdot ksi$ $\quad E_c := 57000 \cdot f_c^{0.5} \cdot \sqrt{psi}$ $\quad E_c = 3122.019 \cdot ksi$

$d := 0.625 \cdot in$ $\quad n := \frac{E_s}{E_c}$ $\quad n = 9.289$ $\quad A_{s4} := \frac{\pi \cdot d^2}{4} \cdot \frac{12}{14}$ $\quad A_{s4} = 0.263 \cdot in^2$

Transformed steel area is:

Top: $\quad A_{tt} := (n - 1) \cdot A_{s4}$ $\quad A_{tt} = 2.180 \cdot in^2$

Bottom: $\quad A_{bt} := n \cdot A_{s4}$ $\quad A_{bt} = 2.443 \cdot in^2$

Properties of lower portion of the wall.

$h := 18 \cdot in$ $\quad d_1 := 1.5 \cdot in + 0.5 \cdot \frac{5}{8} \cdot in$ $\quad d_1 = 1.813 \cdot in$ $\quad d_2 := h - d_1$ $\quad d_2 = 16.188 \cdot in$ $\quad b := 12 \cdot in$

Static moment about Neutral Axis equals to zero. The expression in terms of c is as follows:

Concrete compression zone:

$A_{cz} = b \cdot c$ $\quad y_{cz} = \frac{c}{2}$ $\quad Q_{cz} = A_{cz} \cdot y_{cz}$

by substitution, yields

$Q_{cz} = \frac{1}{2} \cdot b \cdot c^2$

Top steel:

$A_{ts} := A_{tt}$ $\quad y_{ts} = c - d_1$ $\quad Q_{ts} = A_{ts} \cdot y_{ts}$

by substitution, yields

$Q_{ts} = A_{tt} \cdot (c - d_1)$

Bottom steel:

$A_{bs} := A_{bt}$ $\quad y_{bs} = c - d_2$ $\quad Q_{bs} = A_{bs} \cdot y_{bs}$

by substitution, yields

$Q_{bs} = A_{bt} \cdot (c - d_2)$

$Q = Q_{cz} + Q_{ts} + Q_{bs}$

ICF KAISER HANFORD COMPANY

DESIGN ANALYSIS

Calc. No.: *W320-24-011*
Revision: *0*
Page No. *12* of

Client: *WHC*
Subject: *Pump Pit C-06A Analysis and Cover Block Design.*
Location: *Tank 241-C-106, Pump Pit.*

WO/Job No.: *W320/ER4319*
Date: *08/15/1995* By: *M.B. Lasota*
Checked *9/13/95* By: *M.R. Custer*
Revised By

---

by substitution, yields

$$Q = \frac{1}{2}\cdot b\cdot c^2 + A_{tt}\cdot(c - d_1) + A_{bt}\cdot(c - d_2)$$

$A_{tt} := 2.180\cdot in^2$ $A_{bt} := 2.443\cdot in^2$ $b := 12\cdot in$ $d_1 := 1.812\cdot in$ $d_2 := 16.188\cdot in$ $Q := 0$

by substitution, yields

$$Q = 6\cdot c^2 + 4.623\cdot c - 43.497444$$

by substitution, yields

$$0 = 6\cdot c^2 + 4.623\cdot c - 43.497444$$

has solution(s)

$$\begin{pmatrix} -3.1051749185409511962 \\ 2.3346749185409511962 \end{pmatrix} = \begin{pmatrix} -3.105 \\ 2.335 \end{pmatrix} \qquad c := 2.335\cdot in$$

Moment of inertia is:

$A_{cz} := b\cdot c$ $A_{cz} = 28.020\cdot in^2$ $y_{cz} := \frac{c}{2}$ $y_{cz} = 1.168\cdot in$ $I_{cz} := \frac{b\cdot c^3}{12} + A_{cz}\cdot y_{cz}^2$ $I_{cz} = 50.924\cdot in^4$

$A_{ts} := A_{tt}$ $A_{ts} = 2.180\cdot in^2$ $y_{ts} := c - d_1$ $y_{ts} = 0.523\cdot in$ $I_{ts} := A_{ts}\cdot y_{ts}^2$ $I_{ts} = 0.596\cdot in^4$

$A_{bs} := A_{bt}$ $A_{bs} = 2.443\cdot in^2$ $y_{bs} := c - d_2$ $y_{bs} = -13.853\cdot in$ $I_{bs} := A_{bs}\cdot y_{bs}^2$ $I_{bs} = 468.825\cdot in^4$

Cracked moment of inertia is:

$I_{cr} := I_{cz} + I_{ts} + I_{bs}$ $I_{cr} = 520.345\cdot in^4$ $I_{con} := \frac{b\cdot h^3}{12}$ $I_{con} = 5832.000\cdot in^4$

Equivalent modulus of elasticity for use in analysis is:

$$E_{eqh} := E_c\cdot\frac{I_{cr}}{I_{con}} \qquad E_{eqh} = 278.554\cdot ksi$$

ICF KAISER HANFORD COMPANY

DESIGN ANALYSIS

Calc. No.: *W320-24-011*
Revision: *0*
Page No. *13* of

Client: *WHC*
Subject: *Pump Pit C-06A Analysis and Cover Block Design.*
Location: *Tank 241-C-106, Pump Pit.*

WO/Job No.: *W320/ER4319*
Date: *08/15/1995* By: *M.B. Lasota*
Checked *9/13/95* By: *M.R. Custer*
Revised By

Lower wall rigidity with respect to the bending about horizontal axis.

5/8" Bar at 14" O.C. inside surface of the wall.
5/8" Bar at 7" O.C. outside surface of the wall.

$d := 0.625 \cdot in \quad A_{s5} := \frac{\pi \cdot d^2}{4} \cdot \frac{12}{14} \quad A_{s5} = 0.263 \cdot in^2 \quad A_{s6} := \frac{\pi \cdot d^2}{4} \cdot \frac{12}{7} \quad A_{s6} = 0.526 \cdot in^2$

Transformed steel area is:

Top: $A_{tt} := (n - 1) \cdot A_{s5} \quad A_{tt} = 2.180 \cdot in^2$

Bottom: $A_{bt} := n \cdot A_{s6} \quad A_{bt} = 4.885 \cdot in^2$

Properties of lower portion of the wall.

$h := 18 \cdot in \quad d_1 := 1.5 \cdot in + 0.5 \cdot \frac{5}{8} \cdot in \quad d_1 = 1.813 \cdot in \quad d_2 := h - d_1 \quad d_2 = 16.188 \cdot in \quad b := 12 \cdot in$

Static moment about Neutral Axis equals to zero. The expression in terms of c is as follows:

Concrete compression zone:

$A_{cz} = b \cdot c \quad y_{cz} = \frac{c}{2} \quad Q_{cz} = A_{cz} \cdot y_{cz}$

by substitution, yields

$Q_{cz} = \frac{1}{2} \cdot b \cdot c^2$

Top steel:

$A_{ts} := A_{tt} \quad y_{ts} = c - d_1 \quad Q_{ts} = A_{ts} \cdot y_{ts}$

by substitution, yields

$Q_{ts} = A_{tt} \cdot (c - d_1)$

Bottom steel:

$A_{bs} := A_{bt} \quad y_{bs} = c - d_2 \quad Q_{bs} = A_{bs} \cdot y_{bs}$

by substitution, yields

$Q_{bs} = A_{bt} \cdot (c - d_2)$

$Q = Q_{cz} + Q_{ts} + Q_{bs}$

by substitution, yields

$Q = \frac{1}{2} \cdot b \cdot c^2 + A_{tt} \cdot (c - d_1) + A_{bt} \cdot (c - d_2)$

ICF KAISER HANFORD COMPANY

DESIGN ANALYSIS

Calc. No.: *W320-24-011*
Revision: *0*
Page No. *14* of

Client: *WHC*
Subject: *Pump Pit C-06A Analysis and Cover Block Design.*
Location: *Tank 241-C-106, Pump Pit.*

WO/Job No.: *W320/ER4319*
Date: *08/15/1995* By: *M.B. Lasota*
Checked *9/13/95* By: *M.R. Custer*
Revised By

$A_{tt} := 2.180 \cdot in^2$ $A_{bt} := 4.8853 \cdot in^2$ $b := 12.000 \cdot in$ $d_1 := 1.8125 \cdot in$ $d_2 := 16.1875 \cdot in$ $Q := 0$

$$Q = \frac{1}{2} \cdot b \cdot c^2 + 7.065 \cdot c - 83.0315$$

by substitution, yields

$$Q = 6.0 \cdot c^2 + 7.065 \cdot c - 83.0315$$

by substitution, yields

$$0 = 6.0 \cdot c^2 + 7.065 \cdot c - 83.0315$$

has solution(s)

$$\begin{pmatrix} -4.3550757819569104999 \\ 3.1775757819569104999 \end{pmatrix} = \begin{pmatrix} -4.355 \\ 3.178 \end{pmatrix} \qquad c := 3.178 \cdot in$$

Moment of inertia is:

$A_{cz} := b \cdot c$ $A_{cz} = 38.136 \cdot in^2$ $y_{cz} := \frac{c}{2}$ $y_{cz} = 1.589 \cdot in$ $I_{cz} := \frac{b \cdot c^3}{12} + A_{cz} \cdot y_{cz}^2$ $I_{cz} = 128.387 \cdot in^4$

$A_{ts} := A_{tt}$ $A_{ts} = 2.180 \cdot in^2$ $y_{ts} := c - d_1$ $y_{ts} = 1.365 \cdot in$ $I_{ts} := A_{ts} \cdot y_{ts}^2$ $I_{ts} = 4.065 \cdot in^4$

$A_{bs} := A_{bt}$ $A_{bs} = 4.885 \cdot in^2$ $y_{bs} := c - d_2$ $y_{bs} = -13.009 \cdot in$ $I_{bs} := A_{bs} \cdot y_{bs}^2$ $I_{bs} = 826.823 \cdot in^4$

Cracked moment of inertia is:

$I_{cr} := I_{cz} + I_{ts} + I_{bs}$ $I_{cr} = 959.275 \cdot in^4$ $I_{con} := \frac{b \cdot h^3}{12}$ $I_{con} = 5832.000 \cdot in^4$

Equivalent modulus of elasticity for use in analysis is:

$$E_{eqv} := E_c \cdot \frac{I_{cr}}{I_{con}} \qquad E_{eqv} = 513.524 \cdot ksi$$

The IMAGES 3D version 2 program does not have option to model orthotropic plate element. In order to accommodate this shortfall of the program the average modulus of elasicity will be used. As a consequece the horizontal plate moments will be somewhat overestimated while vertical plate moment will be underestimated.

$$E_{eq} := \frac{E_{eqh} + E_{eqv}}{2} \qquad E_{eq} = 396.039 \cdot ksi$$

In the computer analysis the value of the E_{eq} of 474.470 ksi was used. The influence of the use of the actual value of the modulus of elasticity on the distribution of the stress in the plate however, is not significant.

ICF KAISER HANFORD COMPANY

DESIGN ANALYSIS

Client: *WHC*
Subject: *Pump Pit C-06A Analysis and Cover Block Design.*
Location: *Tank 241-C-106, Pump Pit.*

WO/Job No.: *W320/ER4319*
Date: *08/15/1995* By: *M.B. Lasota*
Checked *9/13/95* By: *M.R. Custer*
Revised By

COMPUTER ANALYSIS

An equivalent static analysis will be performed on the critical sluice pit wall using the following load combinations.

From the reference 5, page 30, the following are Factored Load Combinations that shall be considered in Strength Design of the reinforced concrete.

1. $U=1.4D+1.4F+1.7L+1.7H+1.7R_o$
2. $U=1.4D+1.4F+1.7L+1.7H+1.7E_o+1.7R_o$
3. $U=1.4D+1.4F+1.7L+1.7H+1.7W+1.7R_o$
4. $U=D+F+L+H+T_o+R_o+E_{ss}$
5. $U=D+F+L+H+T_o+R_o+W_t$
6. $U=D+F+L+H+T_a+R_a+1.25P_a$
7. $U=D+F+L+H+T_a+R_a+1.15P_a+1.0(Y_r+Y_j+Y_m)+1.15E_o$
8. $U=D+F+L+H+T_a+R_a+1.0P_a+1.0(Y_r+Y_j+Y_m)+1.0E_{ss}$
9. $U=1.05D+1.05F+1.3L+1.3H+1.05T_o+1.3R_o$
10. $U=1.05D+1.05F+1.3L+1.3H+1.3E_o+1.05T_o+1.3R_o$
11. $U=1.05D+1.05F+1.3L+1.3H+1.3W+1.05T_o+1.3R_o$

Based on the design requirements outlined in reference 1 the following load conditions need not be considered: F, E_o, T_o, T_a, R_a, P_a,Y_r, Y_j, Y_m and therefore are equal to zero. Wind and tornado loads - W and W_t - are negligible, since the pit is an underground structure. The set of eleven eqations is simplified as follows:

1. $U=1.4D+1.7L+1.7H+1.7R_o$
2. $U=1.4D+1.7L+1.7H+1.7R_o$
3. $U=1.4D+1.7L+1.7H+1.7R_o$
4. $U=D+L+H+R_o+E_{ss}$
5. $U=D+L+H+R_o$
6. $U=D+L+H$
7. $U=D+L+H$
8. $U=D+L+H+1.0E_{ss}$
9. $U=1.05D+1.3L+1.3H+1.3R_o$
10. $U=1.05D+1.3L+1.3H+1.3R_o$
11. $U=1.05D+1.3L+1.3H+1.3R_o$

The above equations can be grouped and, by simple observation, the governing equation can be selected. As a result the equations 1 and 4 are determined to be the most critical for the Pit Wall.

1. $U=1.4D+1.7L+1.7H+1.7R_o$
4. $U=D+L+H+R_o+E_{ss}$

The equipment loads, R_o, that were used are the transfer pipe load at nozzle 17 and the jumper load at nozzle U6-A of the Sluice Pit to reflect the most critical load. The pipe and jumper loads acting on the wall were combined by an addition of their absolute values. The drain pipe loads were calculated on the basis of the ultimate/plastic moments and shear for the drain pipe connecting to the nozzle corresponding to the core drill no. 8 at the east Pump Pit wall.

Client: WHC
Subject: Pump Pit C-06A Analysis and Cover Block Design.
Location: Tank 241-C-106, Pump Pit.

WO/Job No.: W320/ER4319
Date: 08/30/1995 By: M.B. Lasota
Checked 9/13/95 By: M.R. Custer
Revised By

EVALUATION OF STRESS IN WALL (h=12.5")

$\sigma_x := 155.2 \cdot psi$ Plate # 266 from page 139 computer run ID BO65974

$\sigma_y := 21.92 \cdot psi$ Plate # 228 from page 156 computer run ID BO65974

$\tau_{xz} := 26.29 \cdot psi$ Plate # 227 from page 136 computer run ID BO65974

$\tau_{yz} := 8.15 \cdot psi$ Plate # 227 from page 136 computer run ID BO65974

Bending moments for 1' wide strip of wall.

$b := 12 \cdot in$ $h := 12.5 \cdot in$

$S_x := \frac{b \cdot h^2}{6}$ $S_x = 312.5 \cdot in^3$ $S_y := S_x$ $S_y = 312.5 \cdot in^3$

$M_x := \sigma_x \cdot S_x$ $M_x = 4.04 \cdot ft \cdot kips$ $M_y := \sigma_y \cdot S_y$ $M_y = 0.57 \cdot ft \cdot kips$

$V_{xz} := \tau_{xz} \cdot b \cdot h$ $V_{xz} = 3.94 \cdot kips$ $V_{yz} := \tau_{yz} \cdot b \cdot h$ $V_{yz} = 1.22 \cdot kips$

Check Horizontal Reinforcement.

$M_u := M_x$ $M_u = 4.04 \cdot ft \cdot kips$ $f_c := 3000 \cdot psi$ $f_y := 40000 \cdot psi$

From dwg H-2-41345, rev 2, and specification HW-4301 rev 1, "the reinforcing bars shall be of intermediate grade deformed bars, conforming to ASTM Specification A-15, latest revision, for billet steel bars". From ASTM A 15 - 39 yield point for intermediate grade is f_y = 40000 psi.

$d := h - 1.5 \cdot in - \frac{0.625 \cdot in}{2}$ $d = 10.69 \cdot in$ $\beta_1 := 0.85$

$A_s := 0.31 \cdot in^2 \cdot \frac{12}{14}$ $A_s = 0.27 \cdot in^2$ $a := \frac{A_s \cdot f_y}{0.85 \cdot f_c \cdot b}$ $a = 0.35 \cdot in$ $\phi := 0.9$

$M_{max} := \phi A_s \cdot f_y \left(d - \frac{a}{2}\right)$ $M_{max} = 8.38 \cdot ft \cdot kips > M_u = 4.04 \cdot ft \cdot kips$ ∴ **OK**

Reinforcement is adequate in one face, therefore a doubly reinforced analysis is not necessary.

ICF KAISER HANFORD COMPANY

DESIGN ANALYSIS

Client: WHC
Subject: Pump Pit C-06A Analysis and Cover Block Design.
Location: Tank 241-C-106, Pump Pit.

WO/Job No.: W320/ER4319
Date: 08/30/1995 By: M.B. Lasota
Checked 9/13/95 By: M.R. Custer
Revised By

Check Vertical Reinforcement.

$M_u := M_y \qquad M_u = 0.57 \cdot ft \cdot kips \qquad f_c := 3000 \cdot psi \qquad f_y := 40000 \cdot psi$

From dwg H-2-41345, rev 2, and specification HW-4301 rev 1, "the reinforcing bars shall be of intermediate grade deformed bars, conforming to ASTM Specification A-15, latest revision, for billet steel bars". From ASTM A 15 - 39 yield point for intermediate grade is f_y = 40000 psi.

$d := h - 1.5 \cdot in - \frac{0.625 \cdot in}{2} \qquad d = 10.69 \cdot in \qquad \beta_1 := 0.85$

$A_s := 0.31 \cdot in^2 \cdot \frac{12}{14} \qquad A_s = 0.27 \cdot in^2 \qquad a := \frac{A_s \cdot f_y}{0.85 \cdot f_c \cdot b} \qquad a = 0.35 \cdot in \qquad \phi := 0.9$

$M_{max} := \phi A_s \cdot f_y \cdot \left(d - \frac{a}{2}\right) \qquad M_{max} = 8.38 \cdot ft \cdot kips > M_u = 0.57 \cdot ft \cdot kips$ ∴ **OK**

Reinforcement is adequate in one face therefore a doubly reinforced analysis is not necessary.

Check Wall Shear.

$b := 12 \cdot in \qquad d = 10.69 \cdot in \qquad f_c := 3000 \cdot psi$

$V_c := 0.85 \cdot 2 \cdot \sqrt{f_c \cdot psi} \cdot b \cdot d \qquad V_c = 11.94 \cdot kips > V_{xz} = 3.94 \cdot kips$ ∴ **OK**

$V_c = 11.94 \cdot kips > V_{yz} = 1.22 \cdot kips$ ∴ **OK**

EVALUATION OF STRESS IN WALL (h=18")

$\sigma_x := 195.2 \cdot psi$	Plate # 171 from page 132 computer run ID BO65974
$\sigma_y := 136.2 \cdot psi$	Plate # 10 from page 120 computer run ID BO65974
$\tau_{xz} := 84.03 \cdot psi$	Plate # 148 from page 130 computer run ID BO65974
$\tau_{yz} := 68.16 \cdot psi$	Plate # 148 from page 130 computer run ID BO65974

ICF KAISER HANFORD COMPANY

DESIGN ANALYSIS

Client: WHC
Subject: Pump Pit C-06A Analysis and Cover Block Design.
Location: Tank 241-C-106, Pump Pit.

WO/Job No.: W320/ER4319
Date: 08/30/1995 By: M.B. Lasota
Checked 9/13/95 By: M.R. Custer
Revised By

Bending moments for 1' wide strip of wall.

$b := 12 \cdot in$ $h := 18.0 \cdot in$

$S_x := \frac{b \cdot h^2}{6}$ $S_x = 648 \cdot in^3$ $S_y := S_x$ $S_y = 648 \cdot in^3$

$M_x := \sigma_x \cdot S_x$ $M_x = 10.54 \cdot ft \cdot kips$ $M_y := \sigma_y \cdot S_y$ $M_y = 7.35 \cdot ft \cdot kips$

$V_{xz} := \tau_{xz} \cdot b \cdot h$ $V_{xz} = 18.15 \cdot kips$ $V_{yz} := \tau_{yz} \cdot b \cdot h$ $V_{yz} = 14.72 \cdot kips$

Check Horizontal Reinforcement.

$M_u := M_x$ $M_u = 10.54 \cdot ft \cdot kips$ $f_c := 3000 \cdot psi$ $f_y := 40000 \cdot psi$

From dwg H-2-41345, rev 2, and specification HW-4301 rev 1, "the reinforcing bars shall be of intermediate grade deformed bars, conforming to ASTM Specification A-15, latest revision, for billet steel bars". From ASTM A 15 - 39 yield point for intermediate grade is f_y = 40000 psi.

$d := h - 1.5 \cdot in - \frac{0.625 \cdot in}{2}$ $d = 16.19 \cdot in$ $\beta_1 := 0.85$

$A_s := 0.31 \cdot in^2 \cdot \frac{12}{14}$ $A_s = 0.27 \cdot in^2$ $a := \frac{A_s \cdot f_y}{0.85 \cdot f_c \cdot b}$ $a = 0.35 \cdot in$ $\phi := 0.9$

$M_{max} := \phi A_s \cdot f_y \left(d - \frac{a}{2}\right)$ $M_{max} = 12.77 \cdot ft \cdot kips > M_u = 10.54 \cdot ft \cdot kips$ ∴ **OK**

Reinforcement is adequate in one face therefore a doubly reinforced analysis is not necessary.

Check Vertical Reinforcement.

$M_u := M_y$ $M_u = 7.35 \cdot ft \cdot kips$ $f_c := 3000 \cdot psi$ $f_y := 40000 \cdot psi$

From dwg H-2-41345, rev 2, and specification HW-4301 rev 1, "the reinforcing bars shall be of intermediate grade deformed bars, conforming to ASTM Specification A-15, latest revision, for billet steel bars". From ASTM A 15 - 39 yield point for intermediate grade is f_y = 40000 psi.

$d := h - 1.5 \cdot in - \frac{0.625 \cdot in}{2}$ $d = 16.19 \cdot in$ $\beta_1 := 0.85$

$A_s := 0.31 \cdot in^2 \cdot \frac{12}{14}$ $A_s = 0.27 \cdot in^2$ $a := \frac{A_s \cdot f_y}{0.85 \cdot f_c \cdot b}$ $a = 0.35 \cdot in$ $\phi := 0.9$

$M_{max} := \phi A_s \cdot f_y \left(d - \frac{a}{2}\right)$ $M_{max} = 12.77 \cdot ft \cdot kips > M_u = 7.35 \cdot ft \cdot kips$ ∴ **OK**

Reinforcement is adequate in one face therefore a doubly reinforced analysis is not necessary.

ICF KAISER HANFORD COMPANY

DESIGN ANALYSIS

Calc. No.: *W320-24-011*
Revision: *0*
Page No. *19* of

Client: *WHC*
Subject: *Pump Pit C-06A Analysis and Cover Block Design.*
Location: *Tank 241-C-106, Pump Pit.*

WO/Job No.: *W320/ER4319*
Date: *08/30/1995* By: *M.B. Lasota*
Checked *9/13/95* By: *M.R. Custer*
Revised By

Check Wall Shear.

$b := 12 \cdot in$ $d = 16.19 \cdot in$ $f_c := 3000 \cdot psi$

$V_c := 0.85 \cdot 2 \cdot \sqrt{f_c \cdot psi} \cdot b \cdot d$ $V_c = 18.09 \cdot kips$ is about equal to $V_{xz} = 18.15 \cdot kips$ ∴ **OK**

$V_c = 18.09 \cdot kips > V_{yz} = 14.72 \cdot kips$ ∴ **OK**

Check the effect of core drill on the Wall Strength.

In order to evaluate the effect of core drill on the wall, the area of its influence must be established. The area weakened by a core drill is defined by the circle with a radius equal to the radius of the desired opening increased by the reinforcement development length. The development length of the 5/8" dia, f_y = 40000psi bar is as follows:

$A_b := 0.31 \cdot in^2$ $d_b := 0.625 \cdot in$

$l_{db} := \frac{0.04 \cdot A_b \cdot f_y}{\sqrt{f_c \cdot psi}} \cdot in^{-1}$ $l_{db} = 9.06 \cdot in$ ref. ACI 318 para.: 12.2.2

$l_{db} := \frac{0.03 \cdot d_b \cdot f_y}{\sqrt{f_c \cdot psi}}$ $l_{db} = 13.69 \cdot in$ ref. ACI 318 para.: 12.2.3.6 - governs. use $l_{db} := 13.75 \cdot in$

The following elements are affected by a core drill: 47 to 50, 65 to 69, 84 to 88, 103 to 112, 122 to 131, 146 to 150, 165 to 169, 184 to 188 and 203 to 207.
The shear stress ultimate capacity will not be affected by the core drill, since it was determined based on plain concrete section. The maximum stress in the elements listed above is as follows:

$\sigma_x := 142.9 \cdot psi$ Element # 148 from page 66 computer run ID BO65974

$\sigma_y := 104.1 \cdot psi$ Element # 147 from page 66 computer run ID BO65974

The further evaluation of the weakened portion of the wall will be based on the effective width of the strip equal to 10" plus twice a development length of the 5/8" rod. Bending moments for thus defined strip of wall are as follow:

$b := 10 \cdot in + 2 \cdot l_{db}$ $b = 37.5 \cdot in$ $h := 18.0 \cdot in$

$S_x := \frac{b \cdot h^2}{6}$ $S_x = 2025 \cdot in^3$ $S_y := S_x$ $S_y = 2025 \cdot in^3$

$M_x := \sigma_x \cdot S_x$ $M_x = 24.11 \cdot ft \cdot kips$ $M_y := \sigma_y \cdot S_y$ $M_y = 17.57 \cdot ft \cdot kips$

ICF KAISER HANFORD COMPANY

DESIGN ANALYSIS

Calc. No.: *W320-24-011*
Revision: *0*
Page No. *20* of

Client: *WHC*
Subject: *Pump Pit C-06A Analysis and Cover Block Design.*
Location: *Tank 241-C-106, Pump Pit.*

WO/Job No.: *W320/ER4319*
Date: *08/30/1995* By: *M.B. Lasota*
Checked *9/13/95* By: *M.R. Custer*
Revised By

Check Horizontal Reinforcement.

$M_u := M_x \quad M_u = 24.11 \cdot ft \cdot kips \quad f_c := 3000 \cdot psi \quad f_y := 40000 \cdot psi$

From dwg H-2-41345, rev 2, and specification HW-4301 rev 1, "the reinforcing bars shall be of intermediate grade deformed bars, conforming to ASTM Specification A-15, latest revision, for billet steel bars". From ASTM A 15 - 39 yield point for intermediate grade is f_y = 40000 psi.

$d := h - 1.5 \cdot in - \frac{0.625 \cdot in}{2} \quad d = 16.19 \cdot in \quad \beta_1 := 0.85$

Due to core drilling of 10" dia opening there is a posibility of a cut of one vertical and one horizontal bar on the tension side of the wall. This will result in reduction of the steel area as follows:

$A_{s1} := 0.31 \cdot in^2 \cdot \frac{b}{14 \cdot in} \quad A_s := A_{s1} - 0.31 \cdot in^2 \quad A_s = 0.52 \cdot in^2$

$a := \frac{A_s \cdot f_y}{0.85 \cdot f_c \cdot b} \quad a = 0.22 \cdot in \quad \phi := 0.9$

$M_{max} := \phi A_s \cdot f_y \cdot \left(d - \frac{a}{2}\right) \quad M_{max} = 25.1 \cdot ft \cdot kips > M_u = 24.11 \cdot ft \cdot kips \quad \therefore$ **OK**

Reinforcement is adequate in one face therefore a doubly reinforced analysis is not necessary.

Check Vertical Reinforcement.

$M_u := M_y \quad M_u = 17.57 \cdot ft \cdot kips \quad f_c := 3000 \cdot psi \quad f_y := 40000 \cdot psi$

From dwg H-2-41345, rev 2, and specification HW-4301 rev 1, "the reinforcing bars shall be of intermediate grade deformed bars, conforming to ASTM Specification A-15, latest revision, for billet steel bars". From ASTM A 15 - 39 yield point for intermediate grade is f_y = 40000 psi.

$d := h - 1.5 \cdot in - \frac{0.625 \cdot in}{2} \quad d = 16.19 \cdot in \quad \beta_1 := 0.85$

Similarily to horizontal reinforcement:

$A_{s1} := 0.31 \cdot in^2 \cdot \frac{b}{14 \cdot in} \quad A_s := A_{s1} - 0.31 \cdot in^2 \quad A_s = 0.52 \cdot in^2$

$a := \frac{A_s \cdot f_y}{0.85 \cdot f_c \cdot b} \quad a = 0.22 \cdot in \quad \phi := 0.9$

$M_{max} := \phi A_s \cdot f_y \cdot \left(d - \frac{a}{2}\right) \quad M_{max} = 25.1 \cdot ft \cdot kips > M_u = 17.57 \cdot ft \cdot kips \quad \therefore$ **OK**

Reinforcement is adequate in one face therefore a doubly reinforced analysis is not necessary.

ICF KAISER HANFORD COMPANY

DESIGN ANALYSIS

Calc. No.: *W320-24-011*
Revision: ~~0~~ 1
Page No. 21 of

Client: *WHC*
Subject: *Pump Pit C-06A Analysis and Cover Block Design.*
Location: *Tank 241-C-106, Pump Pit.*

WO/Job No.: *W320/ER4319*
Date: *08/30/1995* By: *M.B. Lasota*
Checked *9/13/95* By: *M.R. Custer*
Revised *3/6/96* By *M.B. LASOTA*

Conclusion: The strength of walls of the Pump Pit is sufficient to carry all additional loads from the piping and jumper loads when subjected to a postulated earthquake.

Rev 1 change

The cover block re-design provided in Rev 1 of this calculation does not affect the existing analysis of the SC 1 pump pit walls. Modifications provided for cover blocks per ECN W-320-192 are adequately enveloped in Rev 0 analysis of pit walls. No further analysis of SC 1 Pump pit walls is required to support SC 3 cover blocks re-design provided in Rev 1 of this calculation.

Rev 1 change

The Rev 1 loads provided in Attach 4 of this calc are the final nozzle & jumper loads for the pump pit east wall slurry line penetration. These loads are lower and are enveloped by the Rev 0 analysis of the pump pit wall and do affect the conclusion provided. No further analysis is required.

ICF KAISER HANFORD

Calc. No.: W320-24-011
Revision: 0
Page No.: 22 of

DESIGN ANALYSIS

Client: WHC
Subject: Pump Pit C-06A Analysis and Cover Block Design
Location: Tank 241-C-106, Pump Pit.

WO/Job No.: ER4319/W320
Date: 08/09/1995
Checked: 9/13/95
Revised:

By: M.B. Lasota MBL
By: M.R. Custer MRC
By:

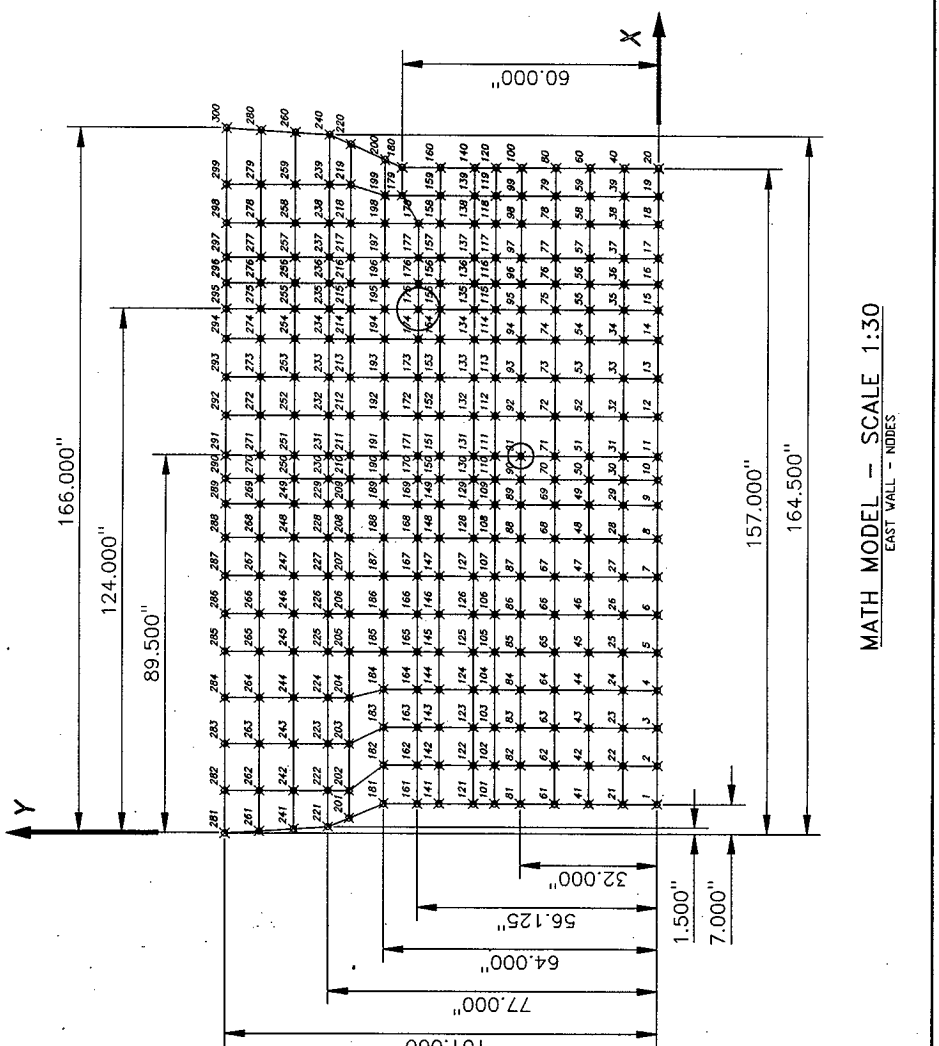

ACAD FILE: W320WALL

ICF KAISER HANFORD

Calc. No.: W320-24-011
Revision: 0
Page No.: 23 of

DESIGN ANALYSIS

Client: WHC
Subject: Pump Pit C-06A Analysis and Cover Block Design
Location: Tank 241-C-106, Pump Pit.

WO/Job No.: ER4319/W320
Date: 08/14/1995
Checked: 9/13/95
Revised:

By: M.B. Lasota MBL
By: M.R. Custer MRC
By:

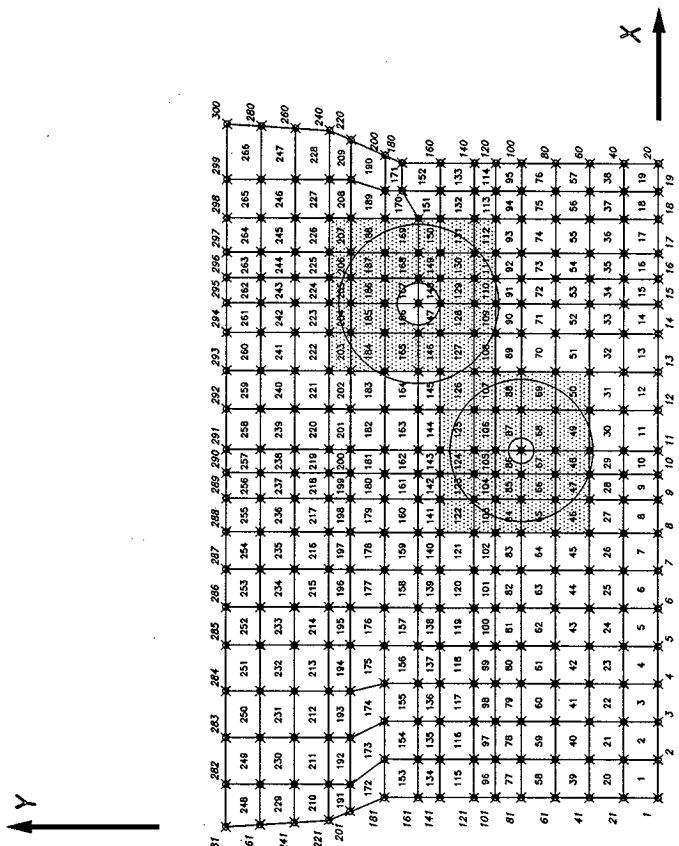

MATH MODEL – SCALE 1:30
EAST WALL - ELEMENTS

ACAD FILE: W320WALL

ICF KAISER HANFORD

Calc. No.: W320-24-011
Revision: 0
Page No.: 24 of

DESIGN ANALYSIS

Client: WHC
Subject: Pump Pit C-06A Analysis and Cover Block Design
Location: Tank 241-C-106, Pump Pit.

WO/Job No.: ER4319/W320
Date: 08/09/1995
Checked: 9/13/95
Revised:

By: M.B. Lasota MBL
By: M.R. Custer MRC
By:

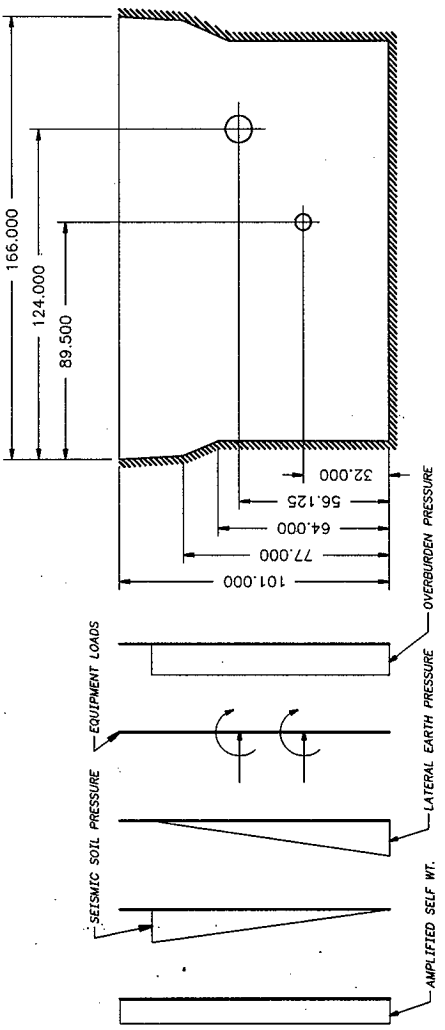

LOADING CONDITIONS FOR THE EAST WALL OF THE PUMP PIT
SCALE 1:42

ACAD FILE: PPITLOAD

ICF KAISER HANFORD

DESIGN ANALYSIS

Calc. No.: W320-24-011
Revision: 0
Page No.: 25 of

Client: WHC
Subject: Pump Pit C-06A Analysis and Cover Block Design
Location: Tank 241-C-106, Pump Pit.

WO/Job No.: ER4319/W320
Date: 08/09/1995
Checked: 9/13/95
Revised:

By: M.B. Lasota MBL
By: M.R. Custer MRC
By:

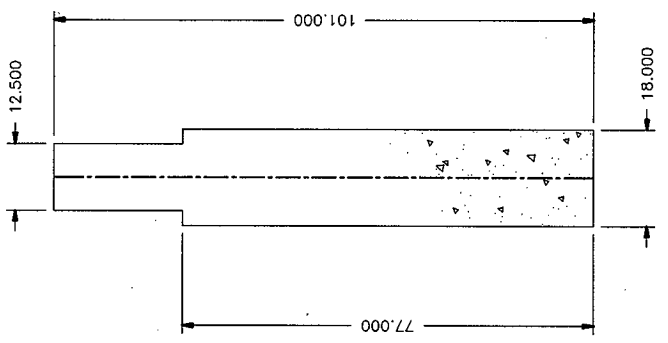

AS MODELED WALL PROFILE
SCALE 1:24

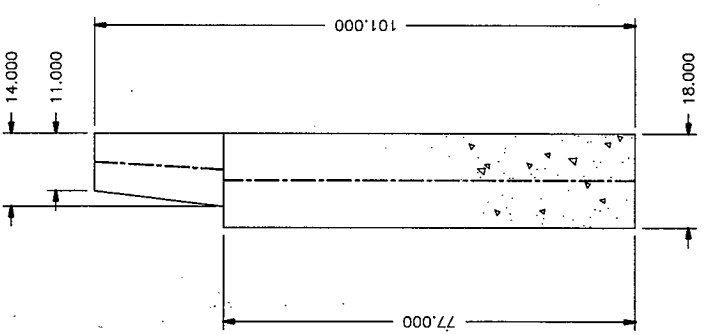

ACTUAL WALL PROFILE
SCALE 1:24

ACAD FILE: WLPROFIL

ICF KAISER HANFORD

Calc. No.: W320-24-011
Revision: 0
Page No.: 26 of

DESIGN ANALYSIS

Client: WHC
Subject: Pump Pit C-06A Analysis and Cover Block Design
Location: Tank 241-C-106, Pump Pit.

WO/Job No.: ER4319/W320
Date: 08/15/1995
Checked: 9/13/95
Revised:

By: M.B. Lasota
By: M.R. Custer
By:

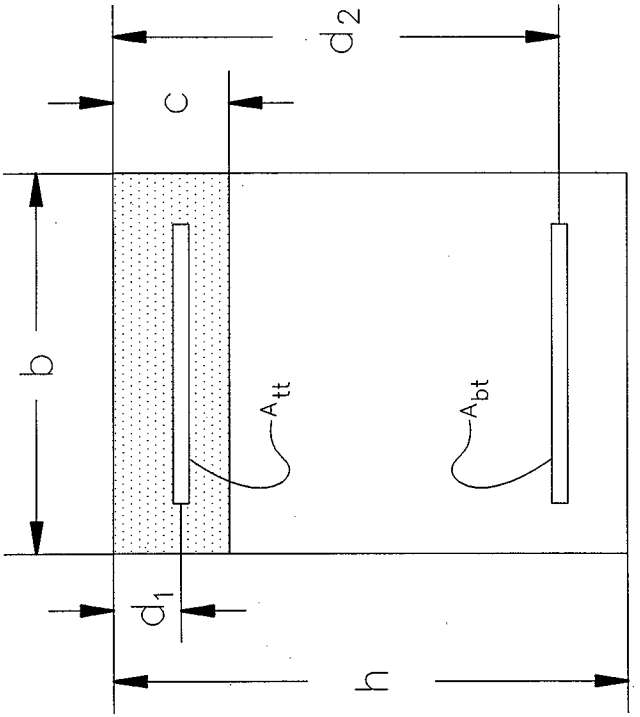

FIGURE 8
DEFINITION OF SECTION GEOMETRY
FOR THE REINFORCED CONCRETE RECTANGULAR BEAM

ACAD FILE: FIGURE8

Client: WHC
Subject: Pump Pit C-06A Analysis and Cover Block Design.
Location: Tank 241-C-106, Pump Pit.

WO/Job No.: ER 4319/W 320
Date: 03/05/96 By: M.B. Lasota
Checked 4/18/96 By: R.W. Davidson
Revised By

WEIGHT OF WEST COVER BLOCK

The Cover Block will be divided into six prismatoids. The volume of which will be calculated. Subsequently the volumes of penetrations and cut-outs will be subtracted. Weight will than be calculated based on the average reinforced concrete density o 150pcf, and adjusted by weight of penetration/cut-out hardware.

$\gamma_{rc} := 150 \cdot pcf$

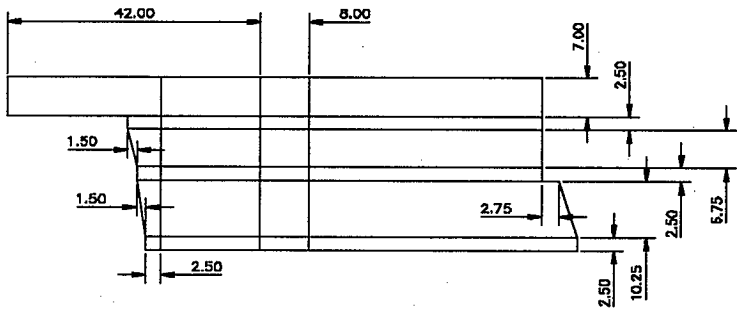

ELEVATION LOOKING NORTH

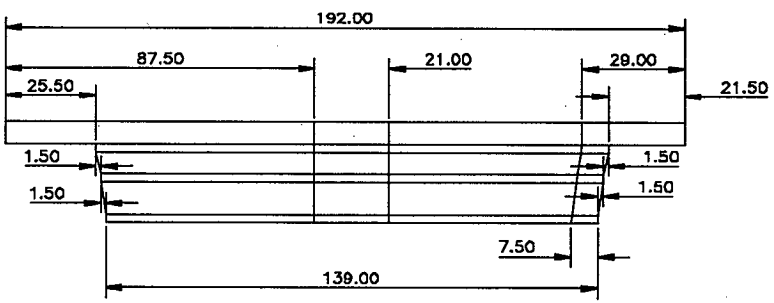

ELEVATION LOOKING WEST

MCAD FILE: W320C11A.MCD

ICF KAISER HANFORD COMPANY

DESIGN ANALYSIS

Calc. No. W320-24-011
Revision 1
Page No.: 27a of

Client: WHC
Subject: Pump Pit C-06A Analysis and Cover Block Design.
Location: Tank 241-C-106, Pump Pit.

WO/Job No.: ER 4319/W 320
Date: 03/05/96 By: M.B. Lasota
Checked 4/19/96 By: R.W. Davidson
Revised By

Prismatoid 1. Thickness 2.5".

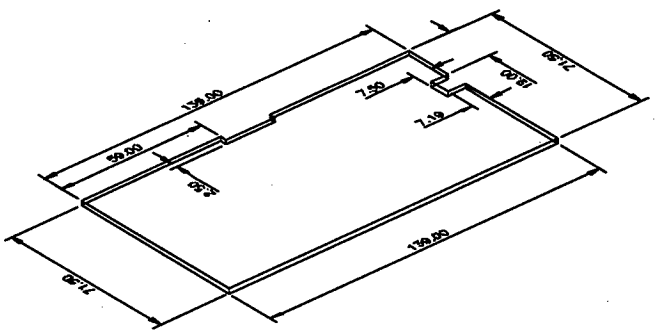

$b_1 := 71.5 \cdot in \quad l_1 := 139 \cdot in \quad h_1 := 2.5 \cdot in \quad x_1 := 2.5 \cdot in \quad y_1 := 21 \cdot in \quad y_{2l} := 7.5 \cdot in \quad y_{2u} := 7.19 \cdot in \quad x_2 := 8 \cdot in$

$$V_1 := b_1 \cdot l_1 \cdot h_1 - x_1 \cdot y_1 \cdot h_1 - \frac{y_{2l} + y_{2u}}{2} \cdot h_1 \cdot x_2 \qquad V_1 = 14.218 \cdot ft^3$$

Location of center of gravity is:

$$x_{1cg} := \left[l_1 \cdot h_1 \cdot \frac{b_1^2}{2} - h_1 \cdot y_1 \cdot \frac{x_1^2}{2} - \frac{y_{2l} + y_{2u}}{2} \cdot h_1 \cdot x_2 \cdot \left(19 \cdot in + \frac{x_2}{2} \right) \right] \cdot \frac{1}{V_1}$$

$x_{1cg} = 36.011 \cdot in$

$$y_{1cg} := \left[b_1 \cdot h_1 \cdot \frac{l_1^2}{2} - h_1 \cdot y_1 \cdot x_1 \cdot \left(59 \cdot in + \frac{x_1}{2} \right) - \frac{y_{2l} + y_{2u}}{2} \cdot h_1 \cdot x_2 \cdot \left[l_1 - \left(y_{2l} + y_{2u} - \frac{y_{2l} y_{2u}}{y_{2l} + y_{2u}} \right) \cdot \frac{1}{3} \right] \right] \cdot \frac{1}{V_1}$$

$y_{1cg} = 69.156 \cdot in$

MCAD FILE: W320C11A.MCD

ICF KAISER HANFORD COMPANY

DESIGN ANALYSIS

Calc. No. W320-24-011
Revision 1
Page No.: 27b of

Client: WHC
Subject: Pump Pit C-06A Analysis and Cover Block Design.
Location: Tank 241-C-106, Pump Pit.

WO/Job No.: ER 4319/W 320
Date: 03/05/96 By: M.B. Lasota
Checked By: R.W. Davidson
Revised By

Prismatoid 2. Thickness 10.25".

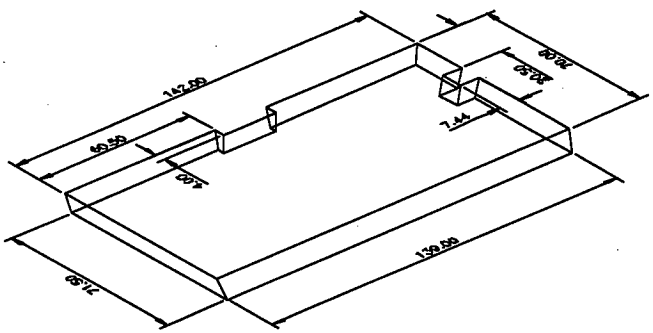

$b_{2l} := 71.5 \cdot in \quad l_{2l} := 139 \cdot in \quad h_2 := 10.25 \cdot in \quad B_1 := b_{2l} l_{2l}$

$b_{2u} := 70 \cdot in \quad l_{2u} := 142 \cdot in \quad B_2 := b_{2u} l_{2u} \quad M := \frac{B_1 + B_2}{2}$

$x_{1l} := 2.5 \cdot in \quad x_{1u} := 4 \cdot in \quad y_1 := 21 \cdot in \quad y_{2l} := 7.19 \cdot in \quad y_{2u} := 7.44 \cdot in \quad x_2 := 8 \cdot in$

$$V_2 := \frac{1}{6} \cdot h_2 \cdot \left(B_1 + 4 \cdot M + B_2\right) - \frac{x_{1l} + x_{1u}}{2} \cdot h_2 \cdot y_1 - \frac{y_{2l} + y_{2u}}{2} \cdot h_2 \cdot x_2 \qquad V_2 = 58.205 \cdot ft^3$$

$A_u := b_{2u} l_{2u} \quad A_u = 69.028 \cdot ft^2 \quad A_l := b_{2l} l_{2l} \quad A_l = 69.017 \cdot ft^2$

$$k := \frac{A_u}{A_l} \quad k = 1.000 \qquad h_{cg} := \frac{h_2}{4} \cdot \frac{1 + 2 \cdot k + 3 \cdot k^2}{1 + k + k^2} \qquad h_{cg} = 5.125 \cdot in$$

$x_u := \frac{b_{2u}}{2} - 1.5 \cdot in \quad y_u := \frac{l_{2u}}{2} - 1.5 \cdot in \quad x_l := \frac{b_{2l}}{2} \quad y_l := \frac{l_{2l}}{2}$

$$x_{ocg} := x_l + \left(x_u - x_l\right) \cdot \frac{h_{cg}}{h_2} \qquad x_{ocg} = 34.625 \cdot in \qquad y_{ocg} := y_l + \left(y_u - y_l\right) \cdot \frac{h_{cg}}{h_2}$$

$y_{ocg} = 69.500 \cdot in$

Location of center of gravity is:

$$x_{2cg} := \left[V_2 \cdot x_{ocg} - h_2 \cdot y_1 \cdot \frac{x_{1l} + x_{1u}}{2} \cdot \left[x_{1l} - \left(x_{1l} + x_{1u} - \frac{x_{1l} x_{1u}}{x_{1l} + x_{1u}}\right) \cdot \frac{1}{3}\right] - \frac{y_{2l} + y_{2u}}{2} \cdot h_2 \cdot x_2 \cdot \left(19 \cdot in + \frac{x_2}{2}\right)\right] \cdot \frac{1}{V_2}$$

$x_{2cg} = 34.482 \cdot in$

$$y_{2cg} := \left[V_2 \cdot y_{ocg} - h_2 \cdot y_1 \cdot \frac{x_{1l} + x_{1u}}{2} \cdot \left(60.5 \cdot in + \frac{y_1}{2}\right) - \frac{y_{2l} + y_{2u}}{2} \cdot h_2 \cdot x_2 \cdot \left[l_{2l} - \left(y_{2l} + y_{2u} - \frac{y_{2l} y_{2u}}{y_{2l} + y_{2u}}\right) \cdot \frac{1}{3}\right]\right] \cdot \frac{1}{V_2}$$

$y_{2cg} = 68.199 \cdot in$

MCAD FILE: W320C11A.MCD

ICF KAISER HANFORD COMPANY

DESIGN ANALYSIS

Calc. No. W320-24-011
Revision 1
Page No.: 27c of

Client: WHC
Subject: Pump Pit C-06A Analysis and Cover Block Design.
Location: Tank 241-C-106, Pump Pit.

WO/Job No.: ER 4319/W 320
Date: 03/05/96 By: M.B. Lasota
Checked By: R.W. Davidson
Revised By

Prismatoid 3. Thickness 2.5".

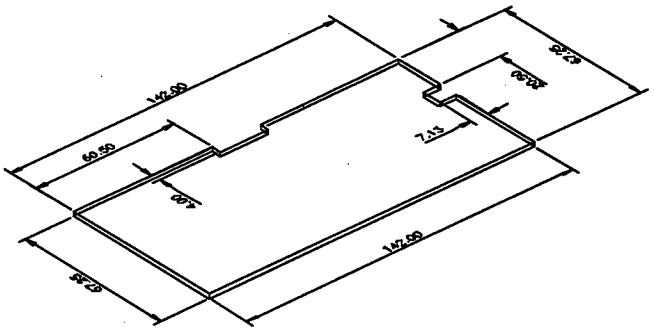

$b_3 := 67.25 \cdot in \quad l_3 := 142 \cdot in \quad h_3 := 2.5 \cdot in \quad x_1 := 4 \cdot in \quad y_1 := 21 \cdot in \quad y_{2l} := 7.44 \cdot in \quad y_{2u} := 7.13 \cdot in \quad x_2 := 8 \cdot in$

$$V_3 := b_3 \cdot l_3 \cdot h_3 - x_1 \cdot y_1 \cdot h_3 - \frac{y_{2l} + y_{2u}}{2} \cdot h_3 \cdot x_2 \qquad V_3 = 13.61 \cdot ft^3$$

Location of center of gravity is:

$$x_{3cg} := \left[l_3 \cdot h_3 \cdot \frac{b_3^2}{2} - h_3 \cdot y_1 \cdot \frac{x_1^2}{2} - \frac{y_{2l} + y_{2u}}{2} \cdot h_3 \cdot x_2 \cdot \left(20.5 \cdot in + \frac{x_2}{2} \right) \right] \cdot \frac{1}{V_3}$$

$x_{3cg} = 33.964 \cdot in$

$$y_{3cg} := \left[b_3 \cdot h_3 \cdot \frac{l_3^2}{2} - h_3 \cdot y_1 \cdot x_1 \cdot \left(60.5 \cdot in + \frac{y_1}{2} \right) - \frac{y_{2l} + y_{2u}}{2} \cdot h_3 \cdot x_2 \cdot \left[l_3 - \left(y_{2l} + y_{2u} - \frac{y_{2l} y_{2u}}{y_{2l} + y_{2u}} \right) \cdot \frac{1}{3} \right] \right] \cdot \frac{1}{V_3}$$

$y_{3cg} = 70.583 \cdot in$

MCAD FILE: W32QC11A.MCD

ICF KAISER HANFORD COMPANY

DESIGN ANALYSIS

Calc. No. W320-24-011
Revision 1
Page No.: 27d of

Client: WHC
Subject: Pump Pit C-06A Analysis and Cover Block Design.
Location: Tank 241-C-106, Pump Pit.

WO/Job No.: ER 4319/W 320
Date: 03/05/96 By: M.B. Lasota
Checked By: R.W. Davidson
Revised By

Prismatoid 4. Thickness 6.75".

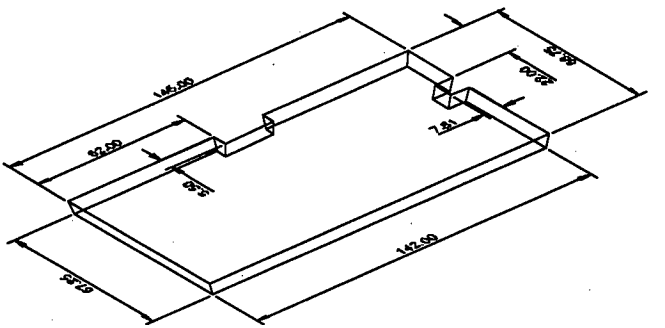

$b_{4l} := 67.25 \cdot in \quad l_{4l} := 142 \cdot in \quad h_4 := 6.75 \cdot in \quad B_1 := b_{4l} l_{4l}$

$b_{4u} := 68.75 \cdot in \quad l_{4u} := 145 \cdot in \quad B_2 := b_{4u} l_{4u} \quad M := \frac{B_1 + B_2}{2}$

$x_{1l} := 4 \cdot in \quad x_{1u} := 5.5 \cdot in \quad y_1 := 21 \cdot in \quad y_{2l} := 7.13 \cdot in \quad y_{2u} := 7.81 \cdot in \quad x_2 := 8 \cdot in$

$$V_4 := \frac{1}{6} h_4 \left(B_1 + 4 \cdot M + B_2\right) - \frac{x_{1l} + x_{1u}}{2} h_4 y_1 - \frac{y_{2l} + y_{2u}}{2} h_4 x_2 \qquad V_4 = 37.498 \cdot ft^3$$

$A_u := b_{4u} l_{4u} \quad A_u = 69.227 \cdot ft^2 \quad A_l := b_{4l} l_{4l} \quad A_l = 66.316 \cdot ft^2 \quad k := \frac{A_u}{A_l} \quad k = 1.044$

$$h_{cg} := \frac{h_4}{4} \cdot \frac{1 + 2 \cdot k + 3 \cdot k^2}{1 + k + k^2} \qquad h_{cg} = 3.423 \cdot in \qquad x_u := \frac{b_{4u}}{2} - 1.5 \cdot in \quad y_u := \frac{l_{4u}}{2} - 1.5 \cdot in \quad x_l := \frac{b_{4l}}{2} \quad y_l := \frac{l_{4l}}{2}$$

$$x_{ocg} := x_l + \left(x_u - x_l\right) \cdot \frac{h_{cg}}{h_2} \qquad x_{ocg} = 33.375 \cdot in \qquad y_{ocg} := y_l + \left(y_u - y_l\right) \cdot \frac{h_{cg}}{h_2} \qquad y_{ocg} = 71.000 \cdot in$$

Location of center of gravity is:

$$x_{4cg} := \left[V_4 x_{ocg} - h_4 y_1 \cdot \frac{x_{1l} + x_{1u}}{2} \cdot \left[x_{1l} - \left(x_{1l} + x_{1u} - \frac{x_{1l} x_{1u}}{x_{1l} + x_{1u}} \right) \cdot \frac{1}{3} \right] - \frac{y_{2l} + y_{2u}}{2} \cdot h_4 x_2 \cdot \left(22 \cdot in + \frac{x_2}{2} \right) \right] \cdot \frac{1}{V_4}$$

$$y_{4cg} := \left[V_4 y_{ocg} - h_4 y_1 \cdot \frac{x_{1l} + x_{1u}}{2} \cdot \left(62 \cdot in + \frac{y_1}{2} \right) - \frac{y_{2l} + y_{2u}}{2} \cdot h_4 x_2 \cdot \left[l_{2l} - \left(y_{2l} + y_{2u} - \frac{y_{2l} y_{2u}}{y_{2l} + y_{2u}} \right) \cdot \frac{1}{3} \right] \right] \cdot \frac{1}{V_4}$$

$x_{4cg} = 33.196 \cdot in \quad y_{4cg} = 69.405 \cdot in$

MCAD FILE: W320C11A.MCD

ICF KAISER HANFORD COMPANY

DESIGN ANALYSIS

Client: WHC
Subject: Pump Pit C-06A Analysis and Cover Block Design.
Location: Tank 241-C-106, Pump Pit.

WO/Job No.: ER 4319/W 320
Date: 03/05/96 By: M.B. Lasota
Checked By: R.W. Davidson
Revised By

Prismatoid 5. Thickness 2.5".

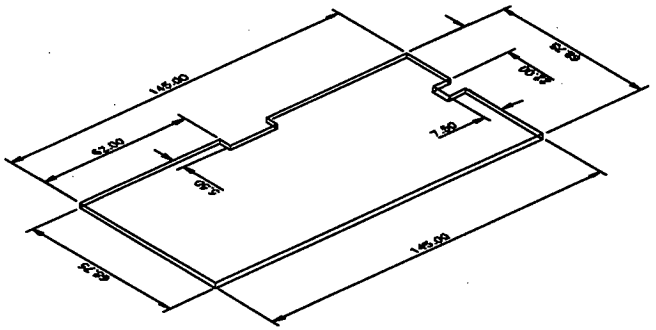

$b_5 := 68.75 \cdot in \quad l_5 := 145 \cdot in \quad h_5 := 2.5 \cdot in \quad x_1 := 5.5 \cdot in \quad y_1 := 21 \cdot in \quad y_{2l} := 7.81 \cdot in \quad y_{2u} := 7.5 \cdot in \quad x_2 := 8 \cdot in$

$$V_5 := b_5 \cdot l_5 \cdot h_5 - x_1 \cdot y_1 \cdot h_5 - \frac{y_{2l} + y_{2u}}{2} \cdot h_5 \cdot x_2 \qquad V_5 = 14.167 \cdot ft^3$$

Location of center of gravity is:

$$x_{5cg} := \left[l_5 \cdot h_5 \cdot \frac{b_5^2}{2} - h_5 \cdot y_1 \cdot \frac{x_1^2}{2} - \frac{y_{2l} + y_{2u}}{2} \cdot h_5 \cdot x_2 \cdot \left(22 \cdot in + \frac{x_2}{2} \right) \right] \cdot \frac{1}{V_5}$$

$x_{5cg} = 34.800 \cdot in$

$$y_{5cg} := \left[b_5 \cdot h_5 \cdot \frac{l_5^2}{2} - h_5 \cdot y_1 \cdot x_1 \cdot \left(62 \cdot in + \frac{y_1}{2} \right) - \frac{y_{2l} + y_{2u}}{2} \cdot h_5 \cdot x_2 \cdot \left[l_5 - \left(y_{2l} + y_{2u} - \frac{y_{2l} y_{2u}}{y_{2l} + y_{2u}} \right) \cdot \frac{1}{3} \right] \right] \cdot \frac{1}{V_5}$$

$y_{5cg} = 72.071 \cdot in$

MCAD FILE: W320C11A.MCD

ICF KAISER HANFORD COMPANY

DESIGN ANALYSIS

Client: WHC
Subject: Pump Pit C-06A Analysis and Cover Block Design.
Location: Tank 241-C-106, Pump Pit.

WO/Job No.: ER 4319/W 320
Date: 03/05/96 By: M.B. Lasota
Checked By: R.W. Davidson
Revised By

Prismatoid 6. Thickness 7.0" average.

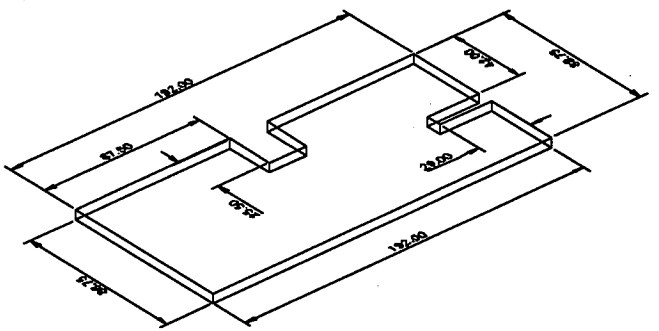

$b_6 := 88.75 \cdot in \quad l_6 := 192 \cdot in \quad h_6 := 7 \cdot in \quad x_1 := 25.5 \cdot in \quad y_1 := 21 \cdot in \quad y_{2l} := 29 \cdot in \quad y_{2u} := 29 \cdot in \quad x_2 := 8 \cdot in$

$$V_6 := b_6 \cdot l_6 \cdot h_6 - x_1 \cdot y_1 \cdot h_6 - \frac{y_{2l} + y_{2u}}{2} \cdot h_6 \cdot x_2 \qquad V_6 = 65.919 \cdot ft^3$$

Location of center of gravity is:

$$x_{6cg} := \left[l_6 \cdot h_6 \cdot \frac{b_6^2}{2} - h_6 \cdot y_1 \cdot \frac{x_1^2}{2} - \frac{y_{2l} + y_{2u}}{2} \cdot h_6 \cdot x_2 \cdot \left(42 \cdot in + \frac{x_2}{2} \right) \right] \cdot \frac{1}{V_6}$$

$$y_{6cg} := \left[b_6 \cdot h_6 \cdot \frac{l_6^2}{2} - h_6 \cdot y_1 \cdot x_1 \cdot \left(87.5 \cdot in + \frac{y_1}{2} \right) - \frac{y_{2l} + y_{2u}}{2} \cdot h_6 \cdot x_2 \cdot \left[l_6 - \left(y_{2l} + y_{2u} - \frac{y_{2l} y_{2u}}{y_{2l} + y_{2u}} \right) \cdot \frac{1}{3} \right] \right] \cdot \frac{1}{V_6}$$

$x_{6cg} = 45.393 \cdot in \qquad y_{6cg} = 94.772 \cdot in$

$V_{gross} := V_1 + V_2 + V_3 + V_4 + V_5 + V_6 \qquad V_{gross} = 203.616 \cdot ft^3 \qquad W_{gross} := V_{gross} \cdot \gamma_{rc} \qquad W_{gross} = 30542 \cdot lbf$

Location of center of gravity is:

$$x_o := \frac{V_1 \cdot x_{1cg} + V_2 \cdot x_{2cg} + V_3 \cdot (x_{3cg} - 1.5 \cdot in) + V_4 \cdot (x_{4cg} - 1.5 \cdot in) + V_5 \cdot (x_{5cg} - 3 \cdot in) + V_6 \cdot (x_{6cg} - 23 \cdot in)}{V_{gross}}$$

$$y_o := \frac{V_1 \cdot y_{1cg} + V_2 \cdot y_{2cg} + V_3 \cdot (y_{3cg} - 1.5 \cdot in) + V_4 \cdot (y_{4cg} - 1.5 \cdot in) + V_5 \cdot (y_{5cg} - 3 \cdot in) + V_6 \cdot (y_{6cg} - 28.5 \cdot in)}{V_{gross}}$$

$x_o = 29.840 \cdot in \qquad y_o = 67.708 \cdot in$ *with respect to south-west top corner:* $x_{ot} := x_o + 23 \cdot in \qquad y_{ot} := y_o + 28.5 \cdot in$

$x_{ot} = 52.840 \cdot in \qquad y_{ot} = 96.208 \cdot in$

MCAD FILE: W320C11A.MCD

ICF KAISER HANFORD COMPANY

DESIGN ANALYSIS

Client: WHC
Subject: Pump Pit C-06A Analysis and Cover Block Design.
Location: Tank 241-C-106, Pump Pit.

WO/Job No.: ER 4319/W 320
Date: 03/05/96 By: M.B. Lasota
Checked 4/18/96 By: R.W. Davidson
Revised By

Volume displaced by Pump Penetration.

Upper portion of the penetration consist of frustum of right angle cone. $x_{pp} := 55.5 \cdot in$ $y_{pp} := 130.56 \cdot in$

$t := 0.375 \cdot in$ $OD_{uu} := 45.5 \cdot in + 2 \cdot \frac{t}{\cos(5 \cdot deg)}$ $r_{ouu} := \frac{OD_{uu}}{2}$ $r_{ouu} = 23.126 \cdot in$

$OD_{ul} := 43.375 \cdot in + 2 \cdot \frac{t}{\cos(5 \cdot deg)}$ $r_{oul} := \frac{OD_{ul}}{2}$ $r_{oul} = 22.064 \cdot in$ $h_u := 12 \cdot in$

$V_{pu} := \frac{\pi}{3} \cdot h_u \cdot \left(r_{ouu}^2 + r_{oul}^2 + r_{ouu} \cdot r_{oul}\right)$ $V_{pu} = 11.140 \cdot ft^3$

Middle portion of the penetration consist of cylinder 3/8" high.

$OD_m := 44.125 \cdot in$ $h_m := 0.375 \cdot in$ $V_{pm} := \frac{\pi}{4} \cdot OD_m^2 \cdot h_m$ $V_{pm} = 0.332 \cdot ft^3$

Lower portion of the penetration consist of cylinder 18.375" high.

$OD_l := 36 \cdot in$ $h_l := 18.375 \cdot in$ $V_{pl} := \frac{\pi}{4} \cdot OD_l^2 \cdot h_l$ $V_{pl} = 10.824 \cdot ft^3$

$V_p := V_{pu} + V_{pm} + V_{pl}$ $V_p = 22.296 \cdot ft^3$ $W_{pd} := V_p \cdot \gamma_{rc}$ $W_{pd} = 3344 \cdot lbf$

The weight of penetration assembly is:

$\gamma_s := 490 \cdot pcf$

Upper portion of the penetration consist of frustum of right angle cone.

$t := 0.375 \cdot in$ $ID_{uu} := 45.5 \cdot in$ $r_{iuu} := \frac{ID_{uu}}{2}$ $r_{iuu} = 22.750 \cdot in$

$ID_{ul} := 43.375 \cdot in$ $r_{iul} := \frac{ID_{ul}}{2}$ $r_{iul} = 21.688 \cdot in$ $h_u := 12 \cdot in$

$V_{pui} := \frac{\pi}{3} \cdot h_u \cdot \left(r_{iuu}^2 + r_{iul}^2 + r_{iuu} \cdot r_{iul}\right)$ $V_{pui} = 10.772 \cdot ft^3$

$V_{su} := V_{pu} - V_{pui}$ $V_{su} = 0.368 \cdot ft^3$

Middle portion of the penetration consist of cylinder 3/8" high.

$ID_m := 34.5 \cdot in$ $h_m := 0.375 \cdot in$ $V_{pmi} := \frac{\pi}{4} \cdot ID_m^2 \cdot h_m$ $V_{pmi} = 0.203 \cdot ft^3$

$V_{sm} := V_{pm} - V_{pmi}$ $V_{sm} = 0.129 \cdot ft^3$

Lower portion of the penetration consist of cylinder 18.375" high.

$ID_l := 34.5 \cdot in$ $h_l := 18.375 \cdot in$ $V_{pli} := \frac{\pi}{4} \cdot ID_l^2 \cdot h_l$ $V_{pli} = 9.941 \cdot length^3$

$V_{sl} := V_{pl} - V_{pli}$ $V_{sl} = 0.883 \cdot ft^3$

$V_{pa} := V_{su} + V_{sm} + V_{sl}$ $V_{pa} = 1.380 \cdot ft^3$ $W_{pa} := V_{pa} \cdot \gamma_s$ $W_{pa} = 676 \cdot lbf$

Client: WHC
Subject: Pump Pit C-06A Analysis and Cover Block Design.
Location: Tank 241-C-106, Pump Pit.

WO/Job No.: ER 4319/W 320
Date: 03/05/96 By: M.B. Lasota
Checked 4/4/96 By: R.W. Davidson
Revised By

Volume displaced by the Winch Penetration

$l_{wp} := 31.5 \cdot in \quad OD_{wp} := 6.625 \cdot in \quad ID_{wp} := 6.065 \cdot in \quad x_{wp} := 64.25 \cdot in \quad y_{wp} := 86.5 \cdot in$

Plate: $w_{pl} := 10 \cdot in \quad l_{pl} := 14 \cdot in \quad t_{pl} := 0.5 \cdot in$

$V_{wp} := \frac{\pi}{4} OD_{wp}^2 \cdot (l_{wp} - t_{pl}) + w_{pl} l_{pl} t_{pl} \quad V_{wp} = 0.659 \cdot ft^3 \quad W_{cwp} := V_{wp} \cdot \gamma_{rc} \quad W_{cwp} = 98.839 \cdot lbf$

Weight of Winch Penetration assembly:

$W_{wpa} := \left(V_{wp} - \frac{\pi}{4} ID_{wp}^2 \cdot l_{wp} \right) \cdot \gamma_s \quad W_{wpa} = 64.816 \cdot lbf$

Location of the center of gravity of the West Cover Block including penetrations is:

$W_{cvb} := W_{gross} - W_{pd} + W_{pa} - W_{cwp} + W_{wpa} \quad W_{cvb} = 27840 \cdot lbf \quad W_{wcb} := W_{cvb}$

$$x_{cvb} := \frac{W_{gross} \cdot x_{ot} - (W_{pd} - W_{pa}) \cdot x_{pp} - (W_{cwp} - W_{wpa}) \cdot x_{wp}}{W_{cvb}} \qquad x_{cvb} = 52.57 \cdot in$$

$$y_{cvb} := \frac{W_{gross} \cdot y_{ot} - (W_{pd} - W_{pa}) \cdot y_{pp} - (W_{cwp} - W_{wpa}) \cdot y_{wp}}{W_{cvb}} \qquad y_{cvb} = 92.93 \cdot in$$

ICF KAISER HANFORD COMPANY

DESIGN ANALYSIS

Calc. No. W320-24-011
Revision 1
Page No.: 27i of

Client: WHC
Subject: Pump Pit C-06A Analysis and Cover Block Design.
Location: Tank 241-C-106, Pump Pit.

WO/Job No.: ER 4319/W 320
Date: 03/05/96 By: M.B. Lasota
Checked 4/18/96 By: R.W. Davidson
Revised By

The following calculations will determine the thickness and the depth of upper sleeve for the cover block penetration that will satisfy minimum radiological shielding requirements.

The calculations of the minimum thickness.

$$\tan(\alpha) = \frac{30.5 \cdot in}{35.25 \cdot in + t_{min}} \quad \text{and} \quad \cos(\alpha) = \frac{t_{min}}{7 \cdot in} \quad \text{or} \quad t_{min} = 7 \cdot in \cdot \cos(\alpha)$$

Substitution in the first equation for t_{min} yields:

$$\tan(\alpha) = \frac{30.5 \cdot in}{35.25 \cdot in + 7 \cdot in \cdot \cos(\alpha)}$$

Let:

$$\tan\left(\frac{\alpha}{2}\right) = x \quad \text{then:}$$

$$\tan(\alpha) = \frac{2 \cdot x}{1 - x^2} \qquad \cos(\alpha) = \frac{1 - x^2}{1 + x^2} \qquad \text{substitution yields:}$$

$$\frac{2 \cdot x}{1 - x^2} = \frac{30.5 \cdot in}{35.25 \cdot in + 7 \cdot in \cdot \frac{1 - x^2}{1 + x^2}}$$

$$70.5 \cdot in \cdot x \cdot (1 + x^2) + 14 \cdot in \cdot x \cdot (1 - x^2) - 30.5 \cdot in \cdot (1 - x^4) = 0$$

$$84.5 \cdot in \cdot x + 56.5 \cdot in \cdot x^3 - 30.5 \cdot in + 30.5 \cdot in \cdot x^4 = 0$$

$x := 0.332 .. 0.333$

$$f(x) := x^4 + \frac{56.5 \cdot in}{30.5 \cdot in} \cdot x^3 + \frac{84.5 \cdot in}{30.5 \cdot in} \cdot x - 1 \qquad a := root\left(x^4 + \frac{56.5 \cdot in}{30.5 \cdot in} \cdot x^3 + \frac{84.5 \cdot in}{30.5 \cdot in} \cdot x - 1, x\right) \qquad a = 0.332073033$$

$x := a \qquad \alpha := 2 \cdot atan(x) \qquad \alpha = 36.740 \cdot deg$

$t_{min} := 7 \cdot in \cdot \cos(\alpha) \qquad t_{min} = 5.610 \cdot in$

$t_{min} := 5.625 \cdot in$

Client: WHC
Subject: Pump Pit C-06A Analysis and Cover Block Design.
Location: Tank 241-C-106, Pump Pit.

WO/Job No.: ER 4319/W 320
Date: 03/05/96 By: M.B. Lasota
Checked 4/18/96 By: R.W. Davidson
Revised By

The calculations of the minimum depth.

$d = 30.5 \cdot in - t_{min} \cdot \tan(\beta) - 35.25 \cdot in \cdot \tan(\beta)$ *and*

$$\frac{0.375 \cdot in}{\cos(\beta)} \cdot \frac{490}{150} + \frac{t_{min} - 0.375 \cdot in}{\cos(\beta)} + \frac{d}{\sin(\beta)} = 7 \cdot in \cdot \frac{490}{150}$$

Substitution in the second equation for t_{min} *and d yields:*

$$\left(0.375 \cdot in \cdot \frac{490}{150} + 5.625 \cdot in - 0.375 \cdot in\right) \cdot \frac{1}{\cos(\beta)} + \frac{30.5 \cdot in - 40.875 \cdot in \cdot \tan(\beta)}{\sin(\beta)} = 7 \cdot in \cdot \frac{490}{150} \quad \text{or}$$

$$\left(0.375 \cdot in \cdot \frac{490}{150} + 5.625 \cdot in - 0.375 \cdot in - 40.875 \cdot in\right) \cdot \frac{1}{\cos(\beta)} + \frac{30.5 \cdot in}{\sin(\beta)} = 7 \cdot in \cdot \frac{490}{150}$$

Let:

$\tan\left(\frac{\alpha}{2}\right) = x$ *then:*

$\sin(\alpha) = \frac{2 \cdot x}{1 + x^2}$ $\cos(\alpha) = \frac{1 - x^2}{1 + x^2}$ *substitution yields:*

$$\left(0.375 \cdot in \cdot \frac{490}{150} + 5.625 \cdot in - 0.375 \cdot in - 40.875 \cdot in\right) \cdot \frac{1 + x^2}{1 - x^2} + \frac{30.5 \cdot in \cdot (1 + x^2)}{2 \cdot x} = 7 \cdot in \cdot \frac{490}{150} \quad \text{or}$$

$$\frac{0.375 \cdot in \cdot \frac{490}{150} + 5.625 \cdot in - 0.375 \cdot in - 40.875 \cdot in}{7 \cdot in \cdot \frac{490}{150}} \cdot \frac{1 + x^2}{1 - x^2} + \frac{30.5 \cdot in \cdot (1 + x^2)}{2 \cdot x \cdot 7 \cdot in \cdot \frac{490}{150}} = 1$$

$$\frac{0.375 \cdot in \cdot \frac{490}{150} + 5.625 \cdot in - 0.375 \cdot in - 40.875 \cdot in}{7 \cdot in \cdot \frac{490}{150}} \cdot (1 + x^2) \cdot 2 \cdot x + \frac{30.5 \cdot in \cdot (1 - x^4)}{7 \cdot in \cdot \frac{490}{150}} = 2x \cdot (1 - x^2)$$

$$\frac{30.5 \cdot 150}{7 \cdot 490}(1 - x^4) - \left(\frac{35.625 \cdot 150}{7 \cdot 490} - \frac{0.375}{7}\right) \cdot 2 \cdot x \cdot (1 + x^2) - 2 \cdot x \cdot (1 - x^2) = 0$$

MCAD FILE: W320C11A.MCD

ICF KAISER HANFORD COMPANY

DESIGN ANALYSIS

Client: WHC
Subject: Pump Pit C-06A Analysis and Cover Block Design.
Location: Tank 241-C-106, Pump Pit.

WO/Job No.: ER 4319/W 320
Date: 03/05/96 By: M.B. Lasota
Checked 4/18/96 By: R.W. Davidson
Revised By

$$\left(1 - x^4\right) - \left(\frac{35.625}{30.5} - \frac{0.375 \cdot 490}{30.5 \cdot 150}\right) \cdot 2 \cdot x \cdot \left(1 + x^2\right) - \frac{14 \cdot 490}{30.5 \cdot 150} \cdot x \cdot \left(1 - x^2\right) = 0$$

$$1 - x^4 - 3.755191 \cdot x - .756284 \cdot x^3 = 0 \qquad \text{or}$$

$f(x) := x^4 + 0.756284 \cdot x^3 + 3.755191 \cdot x - 1$ $a := root\left(x^4 + 0.756284 \cdot x^3 + 3.755191 \cdot x - 1, x\right)$ $a = 0.261484747$

$x := a$ $\beta := 2 \cdot atan(x)$ $\beta = 29.308 \cdot deg$

$t_{min} := 5.625 \cdot in$

$d := 30.5 \cdot in - t_{min} \cdot tan(\beta) - 35.25 \cdot in \cdot tan(\beta)$ $d = 7.555 \cdot in$

Use : $d := 8 \cdot in$

ICF KAISER HANFORD COMPANY

DESIGN ANALYSIS

Calc. No.: *W320-24-011*
Revision: *0*
Page No. *28* of

Client: *WHC*
Subject: *Pump Pit C-06A Analysis and Cover Block Design.*
Location: *Tank 241-C-106, Pump Pit.*

WO/Job No.: *W320/ER4319*
Date: *08/15/1995* By: *M.B. Lasota*
Checked *9/13/95* By: *M.R. Custer*
Revised By

WEIGHT OF CENTER COVER BLOCK

For the reference, see Figure 6.

$b_1 := 56 \cdot in$ $h_1 := 7 \cdot in$ $l_1 := 192 \cdot in$ $b_{2u} := 56 \cdot in$ $b_{2m} := 56 \cdot in$ $b_{2l} := 56 \cdot in$

$l_{2u} := 145.0 \cdot in$ $l_{2m} := 143.5 \cdot in$ $l_{2l} := 142.0 \cdot in$ $h_2 := 8.75 \cdot in$ $b_{3u} := 50.5 \cdot in$

$b_{3m} := 47.5 \cdot in$ $b_{3l} := 44.5 \cdot in$ $l_{3u} := 142.0 \cdot in$ $l_{3m} := 140.25 \cdot in$ $l_{3l} := 138.5 \cdot in$ $h_3 := 15.75 \cdot in$

Volume of the west cover block is:

$V_1 := b_1 \cdot l_1 \cdot h_1 \quad V_1 = 43.556 \cdot ft^3$

$A_{2u} := b_{2u} \cdot l_{2u} \quad A_{2u} = 8120.000 \cdot in^2 \quad A_{2m} := b_{2m} \cdot l_{2m} \quad A_{2m} = 8036.000 \cdot in^2$

$A_{2l} := b_{2l} l_{2l} \quad A_{2l} = 7952.000 \cdot in^2$

$$V_2 := \frac{h_2 \cdot (A_{2u} + 4 \cdot A_{2m} + A_{2l})}{6} \qquad V_2 = 40.692 \cdot ft^3$$

$A_{3u} := b_{3u} \cdot l_{3u} \quad A_{3u} = 7171.000 \cdot in^2 \quad A_{3m} := b_{3m} \cdot l_{3m} \quad A_{3m} = 6661.875 \cdot in^2$

$A_{3l} := b_{3l} l_{3l} \quad A_{3l} = 6163.250 \cdot in^2$

$$V_3 := \frac{h_3 \cdot (A_{3u} + 4 \cdot A_{3m} + A_{3l})}{6} \qquad V_3 = 60.736 \cdot ft^3$$

Volume of concrete missing due to penetration

$D_p := 8.625 \cdot in \quad A_p := \frac{\pi \cdot D_p^2}{4} \qquad V_p := A_p \cdot (h_1 + h_2 + h_3) \quad V_p = 1.065 \cdot ft^3$

$V_c := V_1 + V_2 + V_3 - V_p \qquad V_c = 143.918 \cdot ft^3$

Total weight of concrete cover block. Not including penetration plug is:

$W_{ccb} := V_c \cdot \gamma_{rc} \quad W_{ccb} = 21588 \cdot lbf$

Client: WHC
Subject: Pump Pit C-06A Analysis and Cover Block Design.
Location: Tank 241-C-106, Pump Pit.

WO/Job No.: W320/ER4319
Date: 08/15/1995 By: M.B. Lasota MBL
Checked 9/13/95 By: M.R. Custer MRC
Revised By

WEIGHT OF EAST COVER BLOCK

For the reference, see Figure 7.

$b_1 := 76.75 \cdot in$ $h_1 := 7 \cdot in$ $l_1 := 192 \cdot in$ $b_{2u} := 62.25 \cdot in$ $b_{2m} := 61.5 \cdot in$ $b_{2l} := 60.75 \cdot in$

$l_{2u} := 145.0 \cdot in$ $l_{2m} := 143.5 \cdot in$ $l_{2l} := 142.0 \cdot in$ $h_2 := 9.25 \cdot in$ $b_{3u} := 63.5 \cdot in$ $b_{3m} := 64.25 \cdot in$

$b_{3l} := 65 \cdot in$ $l_{3u} := 142.0 \cdot in$ $l_{3m} := 140.25 \cdot in$ $l_{3l} := 138.5 \cdot in$ $h_3 := 15.25 \cdot in$

Volume of the west cover block is:

$V_1 := b_1 \cdot l_1 \cdot h_1$ $V_1 = 59.694 \cdot ft^3$

$A_{2u} := b_{2u} \cdot l_{2u}$ $A_{2u} = 9026.250 \cdot in^2$ $A_{2m} := b_{2m} \cdot l_{2m}$ $A_{2m} = 8825.250 \cdot in^2$

$A_{2l} := b_{2l} \cdot l_{2l}$ $A_{2l} = 8626.500 \cdot in^2$

$$V_2 := \frac{h_2 \cdot (A_{2u} + 4 \cdot A_{2m} + A_{2l})}{6} \qquad V_2 = 47.244 \cdot ft^3$$

$A_{3u} := b_{3u} \cdot l_{3u}$ $A_{3u} = 9017.000 \cdot in^2$ $A_{3m} := b_{3m} \cdot l_{3m}$ $A_{3m} = 9011.063 \cdot in^2$

$A_{3l} := b_{3l} \cdot l_{3l}$ $A_{3l} = 9002.500 \cdot in^2$

$$V_3 := \frac{h_3 \cdot (A_{3u} + 4 \cdot A_{3m} + A_{3l})}{6} \qquad V_3 = 79.521 \cdot ft^3$$

Volume of concrete missing due to penetration

$D_p := 8.625 \cdot in$ $A_p := \frac{\pi \cdot D_p^2}{4}$ $V_p := A_p \cdot (h_1 + h_2 + h_3)$ $V_p = 1.065 \cdot ft^3$

$V_e := V_1 + V_2 + V_3 - 2 \cdot V_p$ $V_e = 184.329 \cdot ft^3$

Total weight of concrete cover block. Not including penetration plugs is:

$W_{ecb} := V_e \cdot \gamma_{rc}$ $W_{ecb} = 27649 \cdot lbf$

ICF KAISER HANFORD COMPANY

DESIGN ANALYSIS

Client: WHC
Subject: Pump Pit C-06A Analysis and Cover Block Design.
Location: Tank 241-C-106, Pump Pit.

WO/Job No.: ER4319/W320
Date: 08/15/1995 By: M.B. Lasota
Checked: By: R.W. Davidson
Revised:03/08/1996 By:M.B. Lasota

Cover Block Design Objective: The cover block design will consist of two parts. First, the west cover block will be designed by dividing the loads at the pump penetration to either side of the penetration. Second, a cover block design will be performed on the center cover block which will be used to determine the reinforcing required for the remaining cover blocks at pits 06A and 06C.

PART 1 Design of the West Cover Block.

Dead Load:

Recall: $W_{wcb} = 27.840 \cdot kips$ - weight of the cover block excluding plugs

$W_{pd} = 3.344 \cdot kips$ - weight of displaced concrete for the Pump Penetration

$W_{wcb} + W_{pd} = 31.184 \cdot kips$ - increased weight used for calculation of the uniformly distributed load.

$w_{d1} := \frac{W_{wcb} + W_{pd}}{l_{3l}}$ - Maximum weight per lineal foot of cover block: $w_{d1} = 2.702 \cdot \frac{kips}{ft}$

$W_{plg} := 7000 \cdot lbf$ - Weight of steel plug. See H-2-818448, sh. 5 and Calc. No. W320-24-025 & ECN W-320-192.

$W_{d2} := W_{plg} + W_{pa} - W_{pd}$ - Concentrated load adjusted by the weight of displaced concrete for the Pump Penetration accounted for in calculation of uniformly distributed load and the weight of the penetration sleeve.

$W_{d2} = 4.332 \cdot kips$

Live Load: $q_{ll} := 50 \cdot psf$ $b_1 := 88.75 \cdot in$

$w_l := b_1 \cdot q_{ll}$ $w_l = 0.370 \cdot kips \cdot ft^{-1}$ Floor load is conservative since access on top of pit is restricted.

Seismic Load:

An equivalent static evaluation will be used in lieu of a dynamic analysis for a simplified and conservative approach. The lateral cover block load must be multiplied by 1.5 per reference 9. In the equivalent static evaluation the fundamental frequency is not calculated but is assumed to be such that response acceleration is the peak of the response spectrum.

$z := 0.47$ Response Spectrum Acceleration (Ref 1, pg 24, Table 6) @ 7% of Critical Damping (Conservative)

$F_{H1} := 1.5 \cdot z \cdot w_{d1}$ $F_{H2} := 1.5 \cdot z \cdot W_{d2}$

$F_{H1} = 1.905 \cdot \frac{kips}{ft}$ $F_{H2} = 3.054 \cdot kips$

The vertical seismic load is 2/3 of the horizontal load(REF 1).

$w_{e1} := \frac{2}{3} \cdot F_{H1}$ $w_{e2} := \frac{2}{3} \cdot F_{H2}$

$w_{e1} = 1.270 \cdot \frac{kips}{ft}$ $w_{e2} = 2.036 \cdot kips$

Environmental Loads:

Ashfall and snow loading will be combined as stated in SDC 4.1, Rev. 11, page 8 and substituted for tornado loads as stated in the SDC and ACI 349, sec. 9.2.1, load case 5. By inspection, a wind blown object as described in SDC 4.1 will not penetrate the cover blocks.

Client: WHC
Subject: Pump Pit C-06A Analysis and Cover Block Design.
Location: Tank 241-C-106, Pump Pit.

WO/Job No.: ER4319/W320
Date: 08/15/1995 By: M.B. Lasota
Checked: By: R.W. Davidson
Revised:03/08/1996 By:M.B. Lasota

Ashfall loading: $w_{ash} := 24 \cdot psf$

Snow loading: $w_{sn} := 20 \cdot psf$

$b_1 := 88.75 \cdot in$ $w_a := (w_{ash} + w_{sn}) \cdot b_1$ $w_a = 0.325 \cdot \frac{kips}{ft}$ *Combined distributed load from snow and ashfall.*

Combined Loading: The following load cases were determined to be valid load combinations from ACI 349, sec 9.2.1 which will be compared to determine the Ultimate Moment.

$w_1 := 1.4 \cdot w_{d1} + 1.7 \cdot w_l$ $w_1 = 4.411 \cdot \frac{kips}{ft}$

$w_2 := 1.4 \cdot w_{d1} + 1.7 \cdot w_l$ $w_2 = 4.411 \cdot \frac{kips}{ft}$

$w_3 := 1.4 \cdot w_{d1} + 1.7 \cdot w_l + 1.7 \cdot w_a$ $w_3 = 4.964 \cdot \frac{kips}{ft}$

$w_4 := w_{d1} + w_l + w_{e1}$ $w_4 = 4.342 \cdot \frac{kips}{ft}$

$w_5 := w_{d1} + w_l + w_a$ $w_5 = 3.397 \cdot \frac{kips}{ft}$

$w_6 := w_{d1} + w_l$ $w_6 = 3.072 \cdot \frac{kips}{ft}$

$w_7 := w_{d1} + w_l$ $w_7 = 3.072 \cdot \frac{kips}{ft}$

$w_8 := w_{d1} + w_l + w_{e1}$ $w_8 = 4.342 \cdot \frac{kips}{ft}$

$w_9 := 1.05 \cdot w_{d1} + 1.3 \cdot w_l$ $w_9 = 3.318 \cdot \frac{kips}{ft}$

$w_{10} := 1.05 \cdot w_{d1} + 1.3 \cdot w_l$ $w_{10} = 3.318 \cdot \frac{kips}{ft}$

$w_{11} := 1.05 \cdot w_{d1} + 1.3 \cdot w_l + 1.3 \cdot w_a$ $w_{11} = 3.741 \cdot \frac{kips}{ft}$

Load combination 3 is a controling combination, hence ultimate moment can be computed using the following loads:

$w_3 = 4.964 \cdot \frac{kips}{ft}$ *and* $W_3 := 1.4 \cdot W_{d2}$ $W_3 = 6.065 \cdot kips$

$L := l_{3l}$ $L = 11.542 \cdot ft$ *- Length of the beam, see drawing H-2-818448, sh.1.*

$a := 8.42 \cdot ft$ *- Distance from South end of beam to critical section.*

$x := \frac{L}{2} - \frac{W_3 \cdot (L - a)}{w_3 \cdot L}$ $x = 5.440 \cdot ft$ *- location of the max Moment (V(x)=0)*

$M_{umax} := \frac{w_3 \cdot x \cdot (L - x)}{2} + \frac{W_3 \cdot x \cdot (L - x)}{L}$

$M_{umax} = 99.836 \cdot kips \cdot ft$ *- maximum moment in the cover block.*

$M_{u1} := \frac{w_3 \cdot a \cdot (L - a)}{2} + \frac{W_3 \cdot a \cdot (L - a)}{L}$ *- bending moment at the Cover Block's weakest section.*

$M_{u1} = 79.056 \cdot kips \cdot ft$

MCAD FILE: W320011.MCD

$M_u := M_{umax}$

$M_u = 99.836 \cdot ft \cdot kips$ *Conservatively, assume the moment is carried only by the part of the cover block east of the penetration.*

Determine required flexural reinforcement:

$f_c := 4000 \cdot psi$ $f_y := 60000 \cdot psi$

$h := 27 \cdot in$ $d := h - (1.5 \cdot in + 0.375 \cdot in)$ *Assume #6 bars.*

$d = 25.125 \cdot in$

$b := 15.25 \cdot in$ *Approximate width of beam*

$F := \frac{b \cdot d^2}{12000} \cdot in^{-3}$ $F = 0.802$

$K_n := \frac{M_u}{F} \cdot (ft \cdot kips)^{-1}$ $K_n = 124.447$ Use $K_n := 175$ *Ref ACI 340.1R-91, FLEXURE 2.2.*

$a_n := 4.37$

$A_s := \frac{M_u}{d \cdot a_n} \cdot \frac{in^3}{ft \cdot kips}$ $A_s = 0.909 \cdot in^2$

Check minimum steel required ref ACI 10.5

$A_{smin} := 0.0033 \cdot b \cdot d$ $A_{smin} = 1.264 \cdot in^2$ *controls.*

Use 3-#6 bars for a steel area of 1.32 sq. inches on either side of the penetration.

Determine shear reinforcement requirements due to shear at the critical section at the pump penetraion.

Determine shear and reinforcement requirements due to shear at a distance from the support equal to the depth of the beam.

$V_{ud} := \frac{w_3 \cdot L}{2} \cdot \frac{L - 2 \cdot d}{L} + \frac{W_3 \cdot a}{L}$ $V_{ud} = 22.679 \cdot kips$

Allowable Shear: (consider width of east side of the cover block, west side is partialy supprted). $b := 16.95 \cdot in$

$V_c := 2 \cdot \sqrt{f_c \cdot psi} \cdot b \cdot d$ $V_c = 53.869 \cdot kips$ $\phi := 0.85$ $V_n := \phi V_c$ $V_n = 45.788 \cdot kips$

$0.5 \cdot V_n = 22.894 \cdot kips$

Since $V_u < 0.5 \cdot V_n$ *Design for shear reinforcement not required per ACI 349, Sec. 11.5.5.1.*

Development Length: Development length for number 6 bars is 17 inches. Bars will be extended well past the pump penetration opening.

Client: WHC
Subject: Pump Pit C-06A Analysis and Cover Block Design.
Location: Tank 241-C-106, Pump Pit.

WO/Job No.: W320/ER4319
Date: 08/15/1995 By: M.B. Lasota
Checked 9/13/95 By: M.R. Custer
Revised By

PART 2 Design of the Typical Cover Block.

Dead Load:

For the reference, see Figure 6.

$b_1 := 56 \cdot in \quad h_1 := 7 \cdot in \quad b_{2u} := 56 \cdot in \quad h_2 := 8.75 \cdot in$

$b_{3u} := 50.5 \cdot in \quad b_{3l} := 44.5 \cdot in \quad h_3 := 15.75 \cdot in$

Area of the Center Cover Block is:

$$A_c := b_1 \cdot h_1 + b_{2u} \cdot h_2 + \frac{b_{3u} + b_{3l}}{2} \cdot h_3 \qquad A_c = 1630.125 \cdot in^2$$

The width of an equivalent rectangular section is:

$$h := 30.5 \cdot in \qquad b_{av} := \frac{A_c}{h} \qquad b_{av} = 4.454 \cdot ft$$

The following calculations will apply to 1'-0" wide beam strip.

$W_{ccb} = 21.588 \cdot kips \quad b_1 := 12 \cdot in \quad l_{3l} = 11.542 \cdot ft$

$$w_{d1} := \frac{W_{ccb}}{l_{3l}} \cdot \frac{b_1}{b_{av}} \qquad w_{d1} = 0.420 \cdot \frac{kips}{ft}$$

Live Load:

$$q_{ll} := 50 \cdot \frac{lbf}{ft^2} \qquad b_1 := 12 \cdot in$$

$w_l := b_1 \cdot q_{ll} \qquad w_l = 0.050 \cdot \frac{kips}{ft}$ Floor load is conservative since access on top of pit is restricted.

Seismic Load:

An equivalent static evaluation will be used in lieu of a dynamic analysis for a simplified and conservative approach. The lateral cover block load must be multiplied by 1.5 per reference 9. In the equivalent static evaluation the fundamental frequency is not calculated but is assumed to be such that response acceleration is the peak of the response spectrum.

$z := 0.47$ Response Spectra Acceleration (Ref 1, pg 24, Table 6) @ 7% of Critical Damping (Conservative)

$$F_{H1} := 1.5 \cdot z \cdot w_{d1} \qquad F_{H1} = 0.296 \cdot \frac{kips}{ft}$$

The vertical seismic load is 2/3 of the horizontal load(REF 1).

$$w_{e1} := \frac{2}{3} \cdot F_{H1} \qquad w_{e1} = 0.197 \cdot \frac{kips}{ft}$$

Client: WHC
Subject: Pump Pit C-06A Analysis and Cover Block Design.
Location: Tank 241-C-106, Pump Pit.

WO/Job No.: W320/ER4319
Date: 08/15/1995 By: M.B. Lasota
Checked 9/13/95 By: M.R. Custer
Revised By

Environmental Loads:

Ashfall and snow loading will be combined as stated in SDC 4.1, Rev. 11, page 8 and substituted for tornado loads as stated in the SDC and ACI 349, sec. 9.2.1, load case 5. By inspection, a wind blown object as described in SDC 4.1 will not penetrate the cover blocks.

Ashfall loading: $w_{ash} := 24 \cdot psf$

Snow loading: $w_{sn} := 20 \cdot psf$

$w_a := (w_{ash} + w_{sn}) \cdot b_1 \quad w_a = 0.044 \cdot \frac{kips}{ft}$ Combined distributed load from snow and ashfall.

Combined Loading: The following load cases were determined to be valid load combinations from ACI 349, sec 9.2.1 which will be compared to determine the Ultimate Moment.

$w_1 := 1.4 \cdot w_{d1} + 1.7 \cdot w_l \quad w_1 = 0.673 \cdot \frac{kips}{ft}$

$w_2 := 1.4 \cdot w_{d1} + 1.7 \cdot w_l \quad w_2 = 0.673 \cdot \frac{kips}{ft}$

$w_3 := 1.4 \cdot w_{d1} + 1.7 \cdot w_l + 1.7 \cdot w_a \quad w_3 = 0.748 \cdot \frac{kips}{ft}$

$w_4 := w_{d1} + w_l + w_{e1} \quad w_4 = 0.667 \cdot \frac{kips}{ft}$

$w_5 := w_{d1} + w_l + w_a \quad w_5 = 0.514 \cdot \frac{kips}{ft}$

$w_6 := w_{d1} + w_l \quad w_6 = 0.470 \cdot \frac{kips}{ft}$

$w_7 := w_{d1} + w_l \quad w_7 = 0.470 \cdot \frac{kips}{ft}$

$w_8 := w_{d1} + w_l + w_{e1} \quad w_8 = 0.667 \cdot \frac{kips}{ft}$

$w_9 := 1.05 \cdot w_{d1} + 1.3 \cdot w_l \quad w_9 = 0.506 \cdot \frac{kips}{ft}$

$w_{10} := 1.05 \cdot w_{d1} + 1.3 \cdot w_l \quad w_{10} = 0.506 \cdot \frac{kips}{ft}$

$w_{11} := 1.05 \cdot w_{d1} + 1.3 \cdot w_l + 1.3 \cdot w_a \quad w_{11} = 0.563 \cdot \frac{kips}{ft}$

Load combination 3 is the controling combination, hence ultimate moment can be computed using the following loads:

$w_3 = 0.748 \cdot \frac{kips}{ft}$

$L := l_{3l} \quad L = 11.542 \cdot ft$ See drawing H-2-818448, sh.1.

$M_{umax} := \frac{w_3 \cdot L^2}{8}$

$M_{umax} = 12.451 \cdot kips \cdot ft$ maximum moment in the cover block per one foot of its width.

Client: WHC
Subject: Pump Pit C-06A Analysis and Cover Block Design.
Location: Tank 241-C-106, Pump Pit.

WO/Job No.: W320/ER4319
Date: 08/15/1995 By: M.B. Lasota
Checked 9/13/95 By: M.R. Custer
Revised By

$M_u := M_{umax}$ $M_u = 12.451 \cdot ft \cdot kips$

Determine required flexural reinforcement:

$f_c := 4000 \cdot psi$ $f_y := 60000 \cdot psi$

$h := 27 \cdot in$ $d := h - (1.5 \cdot in + 0.375 \cdot in)$ Assume #6 bars.

$d = 25.125 \cdot in$ $b := 12 \cdot in$

$F := \frac{b \cdot d^2}{12000} \cdot in^{-3}$ $F = 0.631$

$K_n := \frac{M_u}{F} \cdot (ft \cdot kips)^{-1}$ $K_n = 19.723$ Use $K_n := 175$ Goto FLEXURE 2.2.

$a_n := 4.37$

$A_s := \frac{M_u}{d \cdot a_n} \cdot \frac{in^3}{ft \cdot kips}$ $A_s = 0.113 \cdot in^2$

Check minimum steel required per foot of the wall.

$A_{smin} := \frac{4}{3} \cdot A_s$ $A_{smin} = 0.151 \cdot in^2$

For the average width of the cover block of 4.454' total reinforcement area is:

$A_s := A_{smin} \cdot \frac{b_{av}}{1 \cdot ft}$ $A_s = 0.673 \cdot in^2$ controls.

$A_{smin} := 0.0033 \cdot b_{av} \cdot d$ $A_{smin} = 4.431 \cdot in^2$

Use 6-#6 bars for a steel area of 2.65 sq. inches.

ICF KAISER HANFORD COMPANY

DESIGN ANALYSIS

Calc. No.: *W320-24-011*
Revision: *0*
Page No. *36* of

Client: *WHC*
Subject: *Pump Pit C-06A Analysis and Cover Block Design.*
Location: *Tank 241-C-106, Pump Pit.*

WO/Job No.: *W320/ER4319*
Date: *08/15/1995* By: *M.B. Lasota*
Checked *9/13/95* By: *M.R. Custer*
Revised By

Determine shear and reinforcing requirements due to shear at the critical section of the pump penetraion.

Factored shear at the controling section is:

$$V_u := 1.4 \cdot \left(\frac{w_{d1} \cdot L}{2}\right) + 1.7 \cdot \left(\frac{w_l \cdot L}{2}\right)$$

$V_u = 3.883 \cdot kips$

Allowable Shear:

$V_c := 2 \cdot \sqrt{f_c \cdot psi} \cdot b \cdot d$ $\quad V_c = 38.137 \cdot kips$ $\quad \phi := 0.85$

$V_n := \phi \cdot V_c$ $\quad V_n = 32.417 \cdot kips$

Since $\quad 0.5 \cdot V_n = 16.208 \cdot kips$

$V_u < 0.5 \cdot V_n$ Design for shear reinforcement not required per ACI 349, Sec. 11.5.5.1.

Conclusion.

Design of the cover blocks as shown on the drawing H-2-818448 sheet 2 of 5 is adequate.

ICF KAISER HANFORD

Calc. No.: W320-24-011
Revision: 0
Page No.: 37 of

DESIGN ANALYSIS

Client: WHC
Subject: Pump Pit C-06A Analysis and Cover Block Design
Location: Tank 241-C-106, Pump Pit.

WO/Job No.: ER4319/W320
Date: 08/14/1995
Checked: 9/13/95
Revised:

By: M.B. Lasota MBL
By: M.R. Custer MRC
By:

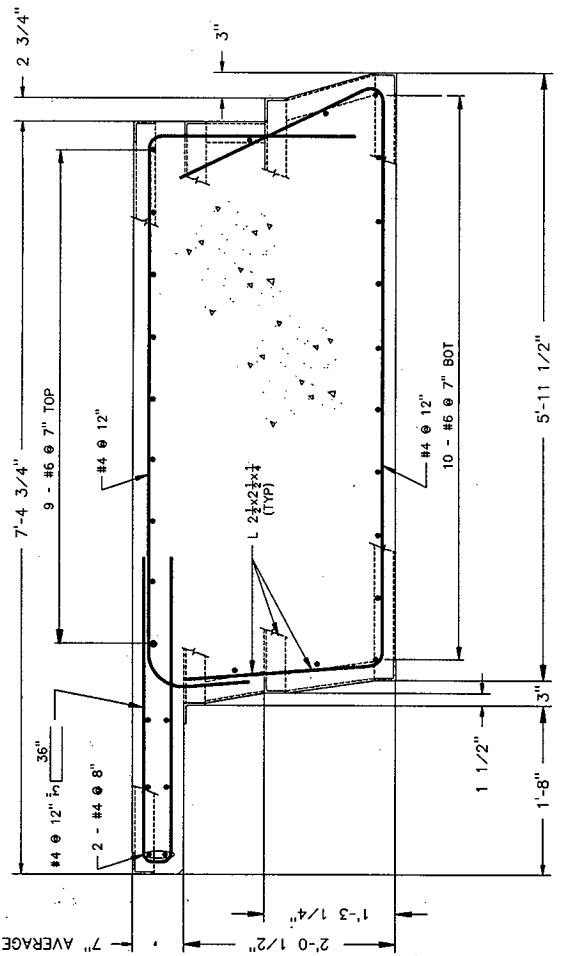

FIGURE 5
WEST COVER BLOCK
SCALE 1:15

ACAD FILE: COVERW

ICF KAISER HANFORD

DESIGN ANALYSIS

Calc. No.: W320-24-011
Revision: 1
Page No.: 37a of

Client: WHC
Subject: Pump Pit C-06A Analysis and Cover Block Design
Location: Tank 241-C-106, Pump Pit.

WO/Job No.: ER4319/W320
Date: 03/08/1996
Checked:
Revised:

By: M. B. Lasota
By: R. W. Davidson
By:

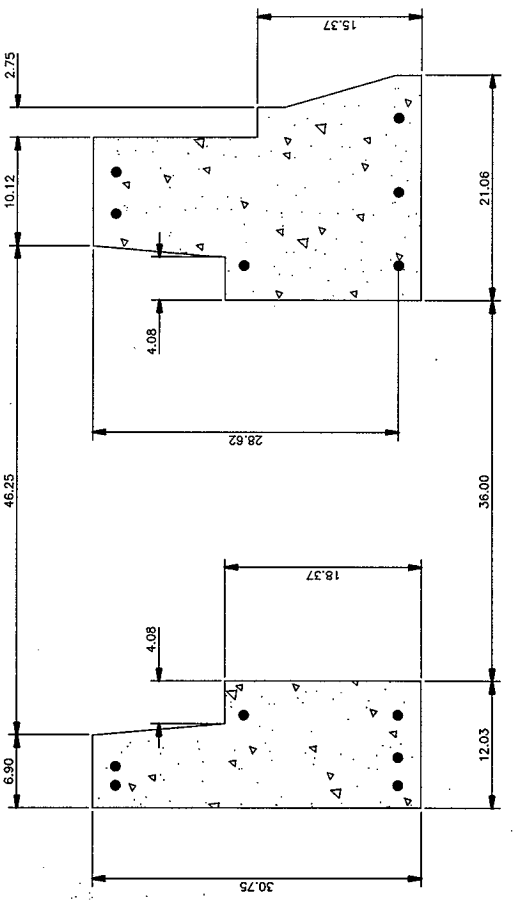

COVER BLOCK'S CRITICAL SECTION
SCALE: 1" = 1'-0"

ACAD FILE: WSTCVBLK

ICF KAISER HANFORD

Calc. No.: W320-24-011
Revision: 0
Page No.: 38 of

DESIGN ANALYSIS

Client: WHC
Subject: Pump Pit C-06A Analysis and Cover Block Design
Location: Tank 241-C-106, Pump Pit.

WO/Job No.: ER4319/W320
Date: 08/15/1995
Checked: 9/13/95
Revised:

By: M.B. Lasota
By: M.R. Custer
By:

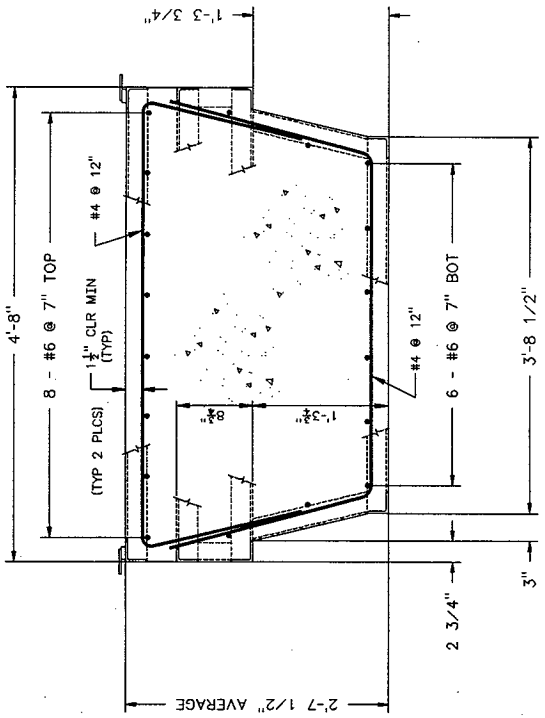

FIGURE 6
CENTER COVER BLOCK
SCALE 1:15

ICF KAISER HANFORD

Calc. No.: W320-24-011
Revision: 0
Page No.: 39 of 39

DESIGN ANALYSIS

Client: WHC
Subject: Pump Pit C-06A Analysis and Cover Block Design
Location: Tank 241-C-106, Pump Pit.

WO/Job No.: ER4319/W320
Date: 08/14/1995
Checked: 9/13/95
Revised:

By: M.B. Lasota
By: M.R. Custer
By:

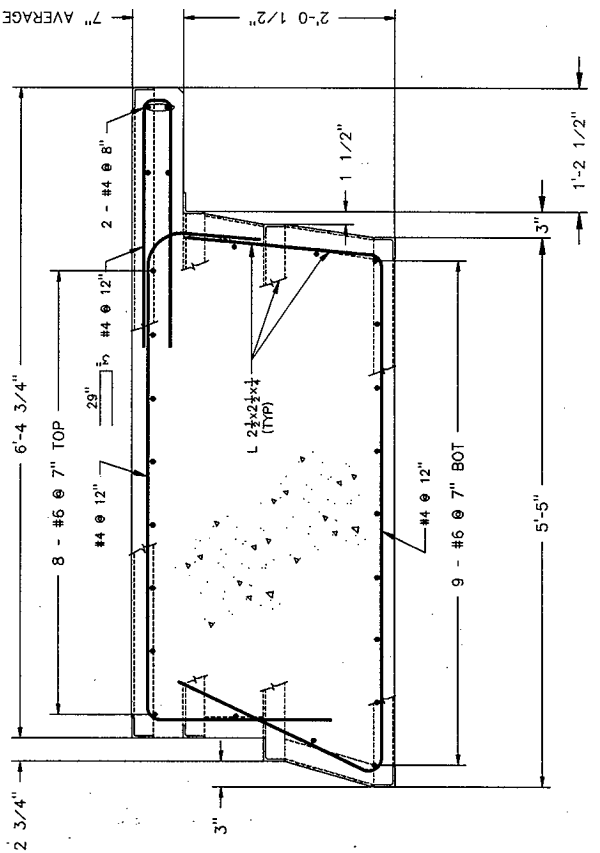

FIGURE 7
EAST COVER BLOCK
SCALE 1:15

ACAD FILE: COVERE

Attachment 1.

Modal analysis of the East Pump Pit wall run ID = DD82417

Date: 08-24-1995; Time: 14:39:58

========== I M A G E S 3 D ==========
= Copyright (c) 1984 Celestial Software Inc. =
==========

CHECK GEOMETRY Version 2.0 07/01/90

MATERIAL PROPERTIES

Material No	Modulus of Elasticity	Weight Density	Coeff of Thermal Exp.	Poisson's Ratio	Shear Web Modulus
1	3.96039E+05	8.68000E-02	5.50000E-06	1.50E-01	0.00000E+00
2	4.85208E+05	8.68000E-02	5.50000E-06	1.50E-01	0.00000E+00

NODE COORDINATES

Node	X-Coord.	Y-Coord.	Z-Coord.
1	7.00000E+00	0.00000E+00	0.00000E+00
2	1.60000E+01	0.00000E+00	0.00000E+00
3	2.50000E+01	0.00000E+00	0.00000E+00
4	3.40000E+01	0.00000E+00	0.00000E+00
5	4.30000E+01	0.00000E+00	0.00000E+00
6	5.20000E+01	0.00000E+00	0.00000E+00
7	6.10000E+01	0.00000E+00	0.00000E+00
8	7.00000E+01	0.00000E+00	0.00000E+00
9	7.80000E+01	0.00000E+00	0.00000E+00
10	8.40000E+01	0.00000E+00	0.00000E+00
11	8.95000E+01	0.00000E+00	0.00000E+00
12	9.90000E+01	0.00000E+00	0.00000E+00
13	1.08000E+02	0.00000E+00	0.00000E+00
14	1.17000E+02	0.00000E+00	0.00000E+00
15	1.24000E+02	0.00000E+00	0.00000E+00
16	1.30000E+02	0.00000E+00	0.00000E+00
17	1.36000E+02	0.00000E+00	0.00000E+00
18	1.44000E+02	0.00000E+00	0.00000E+00
19	1.50500E+02	0.00000E+00	0.00000E+00
20	1.57000E+02	0.00000E+00	0.00000E+00
21	7.00000E+00	8.00000E+00	0.00000E+00
22	1.60000E+01	8.00000E+00	0.00000E+00
23	2.50000E+01	8.00000E+00	0.00000E+00
24	3.40000E+01	8.00000E+00	0.00000E+00
25	4.30000E+01	8.00000E+00	0.00000E+00
26	5.20000E+01	8.00000E+00	0.00000E+00
27	6.10000E+01	8.00000E+00	0.00000E+00
28	7.00000E+01	8.00000E+00	0.00000E+00
29	7.80000E+01	8.00000E+00	0.00000E+00

========== I M A G E S 3 D ==========
= Copyright (c) 1984 Celestial Software Inc. =
==========

CHECK GEOMETRY Version 2.0 07/01/90

Node	X-Coord.	Y-Coord.	Z-Coord.
30	8.40000E+01	8.00000E+00	0.00000E+00
31	8.95000E+01	8.00000E+00	0.00000E+00
32	9.90000E+01	8.00000E+00	0.00000E+00
33	1.08000E+02	8.00000E+00	0.00000E+00
34	1.17000E+02	8.00000E+00	0.00000E+00
35	1.24000E+02	8.00000E+00	0.00000E+00
36	1.30000E+02	8.00000E+00	0.00000E+00
37	1.36000E+02	8.00000E+00	0.00000E+00
38	1.44000E+02	8.00000E+00	0.00000E+00
39	1.50500E+02	8.00000E+00	0.00000E+00
40	1.57000E+02	8.00000E+00	0.00000E+00
41	7.00000E+00	1.60000E+01	0.00000E+00
42	1.60000E+01	1.60000E+01	0.00000E+00
43	2.50000E+01	1.60000E+01	0.00000E+00
44	3.40000E+01	1.60000E+01	0.00000E+00
45	4.30000E+01	1.60000E+01	0.00000E+00
46	5.20000E+01	1.60000E+01	0.00000E+00
47	6.10000E+01	1.60000E+01	0.00000E+00
48	7.00000E+01	1.60000E+01	0.00000E+00
49	7.80000E+01	1.60000E+01	0.00000E+00
50	8.40000E+01	1.60000E+01	0.00000E+00
51	8.95000E+01	1.60000E+01	0.00000E+00
52	9.90000E+01	1.60000E+01	0.00000E+00
53	1.08000E+02	1.60000E+01	0.00000E+00
54	1.17000E+02	1.60000E+01	0.00000E+00
55	1.24000E+02	1.60000E+01	0.00000E+00
56	1.30000E+02	1.60000E+01	0.00000E+00
57	1.36000E+02	1.60000E+01	0.00000E+00
58	1.44000E+02	1.60000E+01	0.00000E+00
59	1.50500E+02	1.60000E+01	0.00000E+00
60	1.57000E+02	1.60000E+01	0.00000E+00
61	7.00000E+00	2.40000E+01	0.00000E+00
62	1.60000E+01	2.40000E+01	0.00000E+00
63	2.50000E+01	2.40000E+01	0.00000E+00
64	3.40000E+01	2.40000E+01	0.00000E+00
65	4.30000E+01	2.40000E+01	0.00000E+00
66	5.20000E+01	2.40000E+01	0.00000E+00
67	6.10000E+01	2.40000E+01	0.00000E+00
68	7.00000E+01	2.40000E+01	0.00000E+00
69	7.80000E+01	2.40000E+01	0.00000E+00
70	8.40000E+01	2.40000E+01	0.00000E+00
71	8.95000E+01	2.40000E+01	0.00000E+00

IMAGES 3D
= Copyright (c) 1984 Celestial Software Inc. =

CHECK GEOMETRY Version 2.0 07/01/90

Node	X-Coord.	Y-Coord.	Z-Coord.
72	9.90000E+01	2.40000E+01	0.00000E+00
73	1.08000E+02	2.40000E+01	0.00000E+00
74	1.17000E+02	2.40000E+01	0.00000E+00
75	1.24000E+02	2.40000E+01	0.00000E+00
76	1.30000E+02	2.40000E+01	0.00000E+00
77	1.36000E+02	2.40000E+01	0.00000E+00
78	1.44000E+02	2.40000E+01	0.00000E+00
79	1.50500E+02	2.40000E+01	0.00000E+00
80	1.57000E+02	2.40000E+01	0.00000E+00
81	7.00000E+00	3.20000E+01	0.00000E+00
82	1.60000E+01	3.20000E+01	0.00000E+00
83	2.50000E+01	3.20000E+01	0.00000E+00
84	3.40000E+01	3.20000E+01	0.00000E+00
85	4.30000E+01	3.20000E+01	0.00000E+00
86	5.20000E+01	3.20000E+01	0.00000E+00
87	6.10000E+01	3.20000E+01	0.00000E+00
88	7.00000E+01	3.20000E+01	0.00000E+00
89	7.80000E+01	3.20000E+01	0.00000E+00
90	8.40000E+01	3.20000E+01	0.00000E+00
91	8.95000E+01	3.20000E+01	0.00000E+00
92	9.90000E+01	3.20000E+01	0.00000E+00
93	1.08000E+02	3.20000E+01	0.00000E+00
94	1.17000E+02	3.20000E+01	0.00000E+00
95	1.24000E+02	3.20000E+01	0.00000E+00
96	1.30000E+02	3.20000E+01	0.00000E+00
97	1.36000E+02	3.20000E+01	0.00000E+00
98	1.44000E+02	3.20000E+01	0.00000E+00
99	1.50500E+02	3.20000E+01	0.00000E+00
100	1.57000E+02	3.20000E+01	0.00000E+00
101	7.00000E+00	3.80000E+01	0.00000E+00
102	1.60000E+01	3.80000E+01	0.00000E+00
103	2.50000E+01	3.80000E+01	0.00000E+00
104	3.40000E+01	3.80000E+01	0.00000E+00
105	4.30000E+01	3.80000E+01	0.00000E+00
106	5.20000E+01	3.80000E+01	0.00000E+00
107	6.10000E+01	3.80000E+01	0.00000E+00
108	7.00000E+01	3.80000E+01	0.00000E+00
109	7.80000E+01	3.80000E+01	0.00000E+00
110	8.40000E+01	3.80000E+01	0.00000E+00
111	8.95000E+01	3.80000E+01	0.00000E+00
112	9.90000E+01	3.80000E+01	0.00000E+00
113	1.08000E+02	3.80000E+01	0.00000E+00

IMAGES 3D
= Copyright (c) 1984 Celestial Software Inc. =

CHECK GEOMETRY Version 2.0 07/01/90

Node	X-Coord.	Y-Coord.	Z-Coord.
114	1.17000E+02	3.80000E+01	0.00000E+00
115	1.24000E+02	3.80000E+01	0.00000E+00
116	1.30000E+02	3.80000E+01	0.00000E+00
117	1.36000E+02	3.80000E+01	0.00000E+00
118	1.44000E+02	3.80000E+01	0.00000E+00
119	1.50500E+02	3.80000E+01	0.00000E+00
120	1.57000E+02	3.80000E+01	0.00000E+00
121	7.00000E+00	4.30000E+01	0.00000E+00
122	1.60000E+01	4.30000E+01	0.00000E+00
123	2.50000E+01	4.30000E+01	0.00000E+00
124	3.40000E+01	4.30000E+01	0.00000E+00
125	4.30000E+01	4.30000E+01	0.00000E+00
126	5.20000E+01	4.30000E+01	0.00000E+00
127	6.10000E+01	4.30000E+01	0.00000E+00
128	7.00000E+01	4.30000E+01	0.00000E+00
129	7.80000E+01	4.30000E+01	0.00000E+00
130	8.40000E+01	4.30000E+01	0.00000E+00
131	8.95000E+01	4.30000E+01	0.00000E+00
132	9.90000E+01	4.30000E+01	0.00000E+00
133	1.08000E+02	4.30000E+01	0.00000E+00
134	1.17000E+02	4.30000E+01	0.00000E+00
135	1.24000E+02	4.30000E+01	0.00000E+00
136	1.30000E+02	4.30000E+01	0.00000E+00
137	1.36000E+02	4.30000E+01	0.00000E+00
138	1.44000E+02	4.30000E+01	0.00000E+00
139	1.50500E+02	4.30000E+01	0.00000E+00
140	1.57000E+02	4.30000E+01	0.00000E+00
141	7.00000E+00	5.10000E+01	0.00000E+00
142	1.60000E+01	5.10000E+01	0.00000E+00
143	2.50000E+01	5.10000E+01	0.00000E+00
144	3.40000E+01	5.10000E+01	0.00000E+00
145	4.30000E+01	5.10000E+01	0.00000E+00
146	5.20000E+01	5.10000E+01	0.00000E+00
147	6.10000E+01	5.10000E+01	0.00000E+00
148	7.00000E+01	5.10000E+01	0.00000E+00
149	7.80000E+01	5.10000E+01	0.00000E+00
150	8.40000E+01	5.10000E+01	0.00000E+00
151	8.95000E+01	5.10000E+01	0.00000E+00
152	9.90000E+01	5.10000E+01	0.00000E+00
153	1.08000E+02	5.10000E+01	0.00000E+00
154	1.17000E+02	5.10000E+01	0.00000E+00
155	1.24000E+02	5.10000E+01	0.00000E+00

========== I M A G E S 3 D ==========
= Copyright (c) 1984 Celestial Software Inc. =
==========

CHECK GEOMETRY Version 2.0 07/01/90

Node	X-Coord.	Y-Coord.	Z-Coord.
156	1.30000E+02	5.10000E+01	0.00000E+00
157	1.36000E+02	5.10000E+01	0.00000E+00
158	1.44000E+02	5.10000E+01	0.00000E+00
159	1.50500E+02	5.10000E+01	0.00000E+00
160	1.57000E+02	5.10000E+01	0.00000E+00
161	7.00000E+00	5.61250E+01	0.00000E+00
162	1.60000E+01	5.61250E+01	0.00000E+00
163	2.50000E+01	5.61250E+01	0.00000E+00
164	3.40000E+01	5.61250E+01	0.00000E+00
165	4.30000E+01	5.61250E+01	0.00000E+00
166	5.20000E+01	5.61250E+01	0.00000E+00
167	6.10000E+01	5.61250E+01	0.00000E+00
168	7.00000E+01	5.61250E+01	0.00000E+00
169	7.80000E+01	5.61250E+01	0.00000E+00
170	8.40000E+01	5.61250E+01	0.00000E+00
171	8.95000E+01	5.61250E+01	0.00000E+00
172	9.90000E+01	5.61250E+01	0.00000E+00
173	1.08000E+02	5.61250E+01	0.00000E+00
174	1.17000E+02	5.61250E+01	0.00000E+00
175	1.24000E+02	5.61250E+01	0.00000E+00
176	1.30000E+02	5.61250E+01	0.00000E+00
177	1.36000E+02	5.61250E+01	0.00000E+00
178	1.44000E+02	5.61250E+01	0.00000E+00
179	1.50500E+02	6.00000E+01	0.00000E+00
180	1.57000E+02	6.00000E+01	0.00000E+00
181	7.00000E+00	6.40000E+01	0.00000E+00
182	1.60000E+01	6.40000E+01	0.00000E+00
183	2.50000E+01	6.40000E+01	0.00000E+00
184	3.40000E+01	6.40000E+01	0.00000E+00
185	4.30000E+01	6.40000E+01	0.00000E+00
186	5.20000E+01	6.40000E+01	0.00000E+00
187	6.10000E+01	6.40000E+01	0.00000E+00
188	7.00000E+01	6.40000E+01	0.00000E+00
189	7.80000E+01	6.40000E+01	0.00000E+00
190	8.40000E+01	6.40000E+01	0.00000E+00
191	8.95000E+01	6.40000E+01	0.00000E+00
192	9.90000E+01	6.40000E+01	0.00000E+00
193	1.08000E+02	6.40000E+01	0.00000E+00
194	1.17000E+02	6.40000E+01	0.00000E+00
195	1.24000E+02	6.40000E+01	0.00000E+00
196	1.30000E+02	6.40000E+01	0.00000E+00
197	1.36000E+02	6.40000E+01	0.00000E+00

========== I M A G E S 3 D ==========
= Copyright (c) 1984 Celestial Software Inc. =
==========

CHECK GEOMETRY Version 2.0 07/01/90

Node	X-Coord.	Y-Coord.	Z-Coord.
198	1.44000E+02	6.40000E+01	0.00000E+00
199	1.50500E+02	6.40000E+01	0.00000E+00
200	1.58765E+02	6.40000E+01	0.00000E+00
201	3.61500E+00	7.20000E+01	0.00000E+00
202	1.00000E+01	7.20000E+01	0.00000E+00
203	2.10000E+01	7.20000E+01	0.00000E+00
204	3.20000E+01	7.20000E+01	0.00000E+00
205	4.30000E+01	7.20000E+01	0.00000E+00
206	5.20000E+01	7.20000E+01	0.00000E+00
207	6.10000E+01	7.20000E+01	0.00000E+00
208	7.00000E+01	7.20000E+01	0.00000E+00
209	7.80000E+01	7.20000E+01	0.00000E+00
210	8.40000E+01	7.20000E+01	0.00000E+00
211	8.95000E+01	7.20000E+01	0.00000E+00
212	9.90000E+01	7.20000E+01	0.00000E+00
213	1.08000E+02	7.20000E+01	0.00000E+00
214	1.17000E+02	7.20000E+01	0.00000E+00
215	1.24000E+02	7.20000E+01	0.00000E+00
216	1.30000E+02	7.20000E+01	0.00000E+00
217	1.36000E+02	7.20000E+01	0.00000E+00
218	1.44000E+02	7.20000E+01	0.00000E+00
219	1.53000E+02	7.20000E+01	0.00000E+00
220	1.62294E+02	7.20000E+01	0.00000E+00
221	1.50000E+02	7.70000E+01	0.00000E+00
222	1.00000E+01	7.70000E+01	0.00000E+00
223	2.10000E+01	7.70000E+01	0.00000E+00
224	3.20000E+01	7.70000E+01	0.00000E+00
225	4.30000E+01	7.70000E+01	0.00000E+00
226	5.20000E+01	7.70000E+01	0.00000E+00
227	6.10000E+01	7.70000E+01	0.00000E+00
228	7.00000E+01	7.70000E+01	0.00000E+00
229	7.80000E+01	7.70000E+01	0.00000E+00
230	8.40000E+01	7.70000E+01	0.00000E+00
231	8.95000E+01	7.70000E+01	0.00000E+00
232	9.90000E+01	7.70000E+01	0.00000E+00
233	1.08000E+02	7.70000E+01	0.00000E+00
234	1.17000E+02	7.70000E+01	0.00000E+00
235	1.24000E+02	7.70000E+01	0.00000E+00
236	1.30000E+02	7.70000E+01	0.00000E+00
237	1.36000E+02	7.70000E+01	0.00000E+00
238	1.44000E+02	7.70000E+01	0.00000E+00
239	1.53000E+02	7.70000E+01	0.00000E+00

========== I M A G E S 3 D ==========
= Copyright (c) 1984 Celestial Software Inc. =
==========

CHECK GEOMETRY Version 2.0 07/01/90

Node	X-Coord.	Y-Coord.	Z-Coord.
240	1.64500E+02	7.70000E+01	0.00000E+00
241	1.00000E+00	8.50000E+01	0.00000E+00
242	1.00000E+01	8.50000E+01	0.00000E+00
243	2.10000E+01	8.50000E+01	0.00000E+00
244	3.20000E+01	8.50000E+01	0.00000E+00
245	4.30000E+01	8.50000E+01	0.00000E+00
246	5.20000E+01	8.50000E+01	0.00000E+00
247	6.10000E+01	8.50000E+01	0.00000E+00
248	7.00000E+01	8.50000E+01	0.00000E+00
249	7.80000E+01	8.50000E+01	0.00000E+00
250	8.40000E+01	8.50000E+01	0.00000E+00
251	8.95000E+01	8.50000E+01	0.00000E+00
252	9.90000E+01	8.50000E+01	0.00000E+00
253	1.08000E+02	8.50000E+01	0.00000E+00
254	1.17000E+02	8.50000E+01	0.00000E+00
255	1.24000E+02	8.50000E+01	0.00000E+00
256	1.30000E+02	8.50000E+01	0.00000E+00
257	1.36000E+02	8.50000E+01	0.00000E+00
258	1.44000E+02	8.50000E+01	0.00000E+00
259	1.53000E+02	8.50000E+01	0.00000E+00
260	1.64988E+02	8.50000E+01	0.00000E+00
261	5.00000E-01	9.30000E+01	0.00000E+00
262	1.00000E+01	9.30000E+01	0.00000E+00
263	2.10000E+01	9.30000E+01	0.00000E+00
264	3.20000E+01	9.30000E+01	0.00000E+00
265	4.30000E+01	9.30000E+01	0.00000E+00
266	5.20000E+01	9.30000E+01	0.00000E+00
267	6.10000E+01	9.30000E+01	0.00000E+00
268	7.00000E+01	9.30000E+01	0.00000E+00
269	7.80000E+01	9.30000E+01	0.00000E+00
270	8.40000E+01	9.30000E+01	0.00000E+00
271	8.95000E+01	9.30000E+01	0.00000E+00
272	9.90000E+01	9.30000E+01	0.00000E+00
273	1.08000E+02	9.30000E+01	0.00000E+00
274	1.17000E+02	9.30000E+01	0.00000E+00
275	1.24000E+02	9.30000E+01	0.00000E+00
276	1.30000E+02	9.30000E+01	0.00000E+00
277	1.36000E+02	9.30000E+01	0.00000E+00
278	1.44000E+02	9.30000E+01	0.00000E+00
279	1.53000E+02	9.30000E+01	0.00000E+00
280	1.65500E+02	9.30000E+01	0.00000E+00
281	0.00000E+00	1.01000E+02	0.00000E+00

========== I M A G E S 3 D ==========
= Copyright (c) 1984 Celestial Software Inc. =
==========

CHECK GEOMETRY Version 2.0 07/01/90

Node	X-Coord.	Y-Coord.	Z-Coord.
282	1.00000E+01	1.01000E+02	0.00000E+00
283	2.10000E+01	1.01000E+02	0.00000E+00
284	3.20000E+01	1.01000E+02	0.00000E+00
285	4.30000E+01	1.01000E+02	0.00000E+00
286	5.20000E+01	1.01000E+02	0.00000E+00
287	6.10000E+01	1.01000E+02	0.00000E+00
288	7.00000E+01	1.01000E+02	0.00000E+00
289	7.80000E+01	1.01000E+02	0.00000E+00
290	8.40000E+01	1.01000E+02	0.00000E+00
291	8.95000E+01	1.01000E+02	0.00000E+00
292	9.90000E+01	1.01000E+02	0.00000E+00
293	1.08000E+02	1.01000E+02	0.00000E+00
294	1.17000E+02	1.01000E+02	0.00000E+00
295	1.24000E+02	1.01000E+02	0.00000E+00
296	1.30000E+02	1.01000E+02	0.00000E+00
297	1.36000E+02	1.01000E+02	0.00000E+00
298	1.44000E+02	1.01000E+02	0.00000E+00
299	1.53000E+02	1.01000E+02	0.00000E+00
300	1.66000E+02	1.01000E+02	0.00000E+00

PLATE ELEMENT CONNECTIVITY

Plate No.		Nodes I	J	K	L	Mat No.	Thickness	Area	Shear Web Thickness	Aspect Ratio	Plate Type
QUAD	1	1	2	22	21	1	1.800E+01	7.200E+01		1.125E+00	M+B
QUAD	2	2	3	23	22	1	1.800E+01	7.200E+01		1.125E+00	M+B
QUAD	3	3	4	24	23	1	1.800E+01	7.200E+01		1.125E+00	M+B
QUAD	4	4	5	25	24	1	1.800E+01	7.200E+01		1.125E+00	M+B
QUAD	5	5	6	26	25	1	1.800E+01	7.200E+01		1.125E+00	M+B
QUAD	6	6	7	27	26	1	1.800E+01	7.200E+01		1.125E+00	M+B
QUAD	7	7	8	28	27	1	1.800E+01	7.200E+01		1.125E+00	M+B
QUAD	8	8	9	29	28	1	1.800E+01	6.400E+01		1.000E+00	M+B
QUAD	9	9	10	30	29	1	1.800E+01	4.800E+01		7.500E-01	M+B
QUAD	10	10	11	31	30	1	1.800E+01	4.400E+01		6.875E-01	M+B
QUAD	11	11	12	32	31	1	1.800E+01	7.600E+01		1.188E+00	M+B
QUAD	12	12	13	33	32	1	1.800E+01	7.200E+01		1.125E+00	M+B
QUAD	13	13	14	34	33	1	1.800E+01	7.200E+01		1.125E+00	M+B
QUAD	14	14	15	35	34	1	1.800E+01	5.600E+01		8.750E-01	M+B
QUAD	15	15	16	36	35	1	1.800E+01	4.800E+01		7.500E-01	M+B

========== I M A G E S 3 D ==========
= Copyright (c) 1984 Celestial Software Inc. =
==========

CHECK GEOMETRY Version 2.0 07/01/90

	Plate No.	Nodes I	J	K	L	Mat No.	Thickness	Area	Shear Web Thickness	Aspect Ratio	Plate Type
QUAD	16	16	17	37	36	1	1.800E+01	4.800E+01		7.500E-01	M+B
QUAD	17	17	18	38	37	1	1.800E+01	6.400E+01		1.000E+00	M+B
QUAD	18	18	19	39	38	1	1.800E+01	5.200E+01		8.125E-01	M+B
QUAD	19	19	20	40	39	1	1.800E+01	5.200E+01		8.125E-01	M+B
QUAD	20	21	22	42	41	1	1.800E+01	7.200E+01		1.125E+00	M+B
QUAD	21	22	23	43	42	1	1.800E+01	7.200E+01		1.125E+00	M+B
QUAD	22	23	24	44	43	1	1.800E+01	7.200E+01		1.125E+00	M+B
QUAD	23	24	25	45	44	1	1.800E+01	7.200E+01		1.125E+00	M+B
QUAD	24	25	26	46	45	1	1.800E+01	7.200E+01		1.125E+00	M+B
QUAD	25	26	27	47	46	1	1.800E+01	7.200E+01		1.125E+00	M+B
QUAD	26	27	28	48	47	1	1.800E+01	7.200E+01		1.125E+00	M+B
QUAD	27	28	29	49	48	1	1.800E+01	6.400E+01		1.000E+00	M+B
QUAD	28	29	30	50	49	1	1.800E+01	4.800E+01		7.500E-01	M+B
QUAD	29	30	31	51	50	1	1.800E+01	4.400E+01		6.875E-01	M+B
QUAD	30	31	32	52	51	1	1.800E+01	7.600E+01		1.188E+00	M+B
QUAD	31	32	33	53	52	1	1.800E+01	7.200E+01		1.125E+00	M+B
QUAD	32	33	34	54	53	1	1.800E+01	7.200E+01		1.125E+00	M+B
QUAD	33	34	35	55	54	1	1.800E+01	5.600E+01		8.750E-01	M+B
QUAD	34	35	36	56	55	1	1.800E+01	4.800E+01		7.500E-01	M+B
QUAD	35	36	37	57	56	1	1.800E+01	4.800E+01		7.500E-01	M+B
QUAD	36	37	38	58	57	1	1.800E+01	6.400E+01		1.000E+00	M+B
QUAD	37	38	39	59	58	1	1.800E+01	5.200E+01		8.125E-01	M+B
QUAD	38	39	40	60	59	1	1.800E+01	5.200E+01		8.125E-01	M+B
QUAD	39	41	42	62	61	1	1.800E+01	7.200E+01		1.125E+00	M+B
QUAD	40	42	43	63	62	1	1.800E+01	7.200E+01		1.125E+00	M+B
QUAD	41	43	44	64	63	1	1.800E+01	7.200E+01		1.125E+00	M+B
QUAD	42	44	45	65	64	1	1.800E+01	7.200E+01		1.125E+00	M+B
QUAD	43	45	46	66	65	1	1.800E+01	7.200E+01		1.125E+00	M+B
QUAD	44	46	47	67	66	1	1.800E+01	7.200E+01		1.125E+00	M+B
QUAD	45	47	48	68	67	1	1.800E+01	7.200E+01		1.125E+00	M+B
QUAD	46	48	49	69	68	1	1.800E+01	6.400E+01		1.000E+00	M+B
QUAD	47	49	50	70	69	1	1.800E+01	4.800E+01		7.500E-01	M+B
QUAD	48	50	51	71	70	1	1.800E+01	4.400E+01		6.875E-01	M+B
QUAD	49	51	52	72	71	1	1.800E+01	7.600E+01		1.188E+00	M+B
QUAD	50	52	53	73	72	1	1.800E+01	7.200E+01		1.125E+00	M+B
QUAD	51	53	54	74	73	1	1.800E+01	7.200E+01		1.125E+00	M+B
QUAD	52	54	55	75	74	1	1.800E+01	5.600E+01		8.750E-01	M+B
QUAD	53	55	56	76	75	1	1.800E+01	4.800E+01		7.500E-01	M+B
QUAD	54	56	57	77	76	1	1.800E+01	4.800E+01		7.500E-01	M+B
QUAD	55	57	58	78	77	1	1.800E+01	6.400E+01		1.000E+00	M+B
QUAD	56	58	59	79	78	1	1.800E+01	5.200E+01		8.125E-01	M+B

========== I M A G E S 3 D ==========
= Copyright (c) 1984 Celestial Software Inc. =
==========

CHECK GEOMETRY Version 2.0 07/01/90

	Plate No.	Nodes I	J	K	L	Mat No.	Thickness	Area	Shear Web Thickness	Aspect Ratio	Plate Type
QUAD	57	59	60	80	79	1	1.800E+01	5.200E+01		8.125E-01	M+B
QUAD	58	61	62	82	81	1	1.800E+01	7.200E+01		1.125E+00	M+B
QUAD	59	62	63	83	82	1	1.800E+01	7.200E+01		1.125E+00	M+B
QUAD	60	63	64	84	83	1	1.800E+01	7.200E+01		1.125E+00	M+B
QUAD	61	64	65	85	84	1	1.800E+01	7.200E+01		1.125E+00	M+B
QUAD	62	65	66	86	85	1	1.800E+01	7.200E+01		1.125E+00	M+B
QUAD	63	66	67	87	86	1	1.800E+01	7.200E+01		1.125E+00	M+B
QUAD	64	67	68	88	87	1	1.800E+01	7.200E+01		1.125E+00	M+B
QUAD	65	68	69	89	88	1	1.800E+01	6.400E+01		1.000E+00	M+B
QUAD	66	69	70	90	89	1	1.800E+01	4.800E+01		7.500E-01	M+B
QUAD	67	70	71	91	90	1	1.800E+01	4.400E+01		6.875E-01	M+B
QUAD	68	71	72	92	91	1	1.800E+01	7.600E+01		1.188E+00	M+B
QUAD	69	72	73	93	92	1	1.800E+01	7.200E+01		1.125E+00	M+B
QUAD	70	73	74	94	93	1	1.800E+01	7.200E+01		1.125E+00	M+B
QUAD	71	74	75	95	94	1	1.800E+01	5.600E+01		8.750E-01	M+B
QUAD	72	75	76	96	95	1	1.800E+01	4.800E+01		7.500E-01	M+B
QUAD	73	76	77	97	96	1	1.800E+01	4.800E+01		7.500E-01	M+B
QUAD	74	77	78	98	97	1	1.800E+01	6.400E+01		1.000E+00	M+B
QUAD	75	78	79	99	98	1	1.800E+01	5.200E+01		8.125E-01	M+B
QUAD	76	79	80	100	99	1	1.800E+01	5.200E+01		8.125E-01	M+B
QUAD	77	81	82	102	101	1	1.800E+01	5.400E+01		1.500E+00	M+B
QUAD	78	82	83	103	102	1	1.800E+01	5.400E+01		1.500E+00	M+B
QUAD	79	83	84	104	103	1	1.800E+01	5.400E+01		1.500E+00	M+B
QUAD	80	84	85	105	104	1	1.800E+01	5.400E+01		1.500E+00	M+B
QUAD	81	85	86	106	105	1	1.800E+01	5.400E+01		1.500E+00	M+B
QUAD	82	86	87	107	106	1	1.800E+01	5.400E+01		1.500E+00	M+B
QUAD	83	87	88	108	107	1	1.800E+01	5.400E+01		1.500E+00	M+B
QUAD	84	88	89	109	108	1	1.800E+01	4.800E+01		1.333E+00	M+B
QUAD	85	89	90	110	109	1	1.800E+01	3.600E+01		1.000E+00	M+B
QUAD	86	90	91	111	110	1	1.800E+01	3.300E+01		9.167E-01	M+B
QUAD	87	91	92	112	111	1	1.800E+01	5.700E+01		1.583E+00	M+B
QUAD	88	92	93	113	112	1	1.800E+01	5.400E+01		1.500E+00	M+B
QUAD	89	93	94	114	113	1	1.800E+01	5.400E+01		1.500E+00	M+B
QUAD	90	94	95	115	114	1	1.800E+01	4.200E+01		1.167E+00	M+B
QUAD	91	95	96	116	115	1	1.800E+01	3.600E+01		1.000E+00	M+B
QUAD	92	96	97	117	116	1	1.800E+01	3.600E+01		1.000E+00	M+B
QUAD	93	97	98	118	117	1	1.800E+01	4.800E+01		1.333E+00	M+B
QUAD	94	98	99	119	118	1	1.800E+01	3.900E+01		1.083E+00	M+B
QUAD	95	99	100	120	119	1	1.800E+01	3.900E+01		1.083E+00	M+B
QUAD	96	101	102	122	121	1	1.800E+01	4.500E+01		1.800E+00	M+B
QUAD	97	102	103	123	122	1	1.800E+01	4.500E+01		1.800E+00	M+B

ISO 4 SPRINT

========== I M A G E S 3 D ==========
= Copyright (c) 1984 Celestial Software Inc. =
==========

CHECK GEOMETRY Version 2.0 07/01/90

	Plate No.	Nodes I	J	K	L	Mat No.	Thickness	Area	Shear Web Thickness	Aspect Ratio	Plate Type
QUAD	98	103	104	124	123	1	1.800E+01	4.500E+01		1.800E+00	M+B
QUAD	99	104	105	125	124	1	1.800E+01	4.500E+01		1.800E+00	M+B
QUAD	100	105	106	126	125	1	1.800E+01	4.500E+01		1.800E+00	M+B
QUAD	101	106	107	127	126	1	1.800E+01	4.500E+01		1.800E+00	M+B
QUAD	102	107	108	128	127	1	1.800E+01	4.500E+01		1.800E+00	M+B
QUAD	103	108	109	129	128	1	1.800E+01	4.000E+01		1.600E+00	M+B
QUAD	104	109	110	130	129	1	1.800E+01	3.000E+01		1.200E+00	M+B
QUAD	105	110	111	131	130	1	1.800E+01	2.750E+01		1.100E+00	M+B
QUAD	106	111	112	132	131	1	1.800E+01	4.750E+01		1.900E+00	M+B
QUAD	107	112	113	133	132	1	1.800E+01	4.500E+01		1.800E+00	M+B
QUAD	108	113	114	134	133	1	1.800E+01	4.500E+01		1.800E+00	M+B
QUAD	109	114	115	135	134	1	1.800E+01	3.500E+01		1.400E+00	M+B
QUAD	110	115	116	136	135	1	1.800E+01	3.000E+01		1.200E+00	M+B
QUAD	111	116	117	137	136	1	1.800E+01	3.000E+01		1.200E+00	M+B
QUAD	112	117	118	138	137	1	1.800E+01	4.000E+01		1.600E+00	M+B
QUAD	113	118	119	139	138	1	1.800E+01	3.250E+01		1.300E+00	M+B
QUAD	114	119	120	140	139	1	1.800E+01	3.250E+01		1.300E+00	M+B
QUAD	115	121	122	142	141	1	1.800E+01	7.200E+01		1.125E+00	M+B
QUAD	116	122	123	143	142	1	1.800E+01	7.200E+01		1.125E+00	M+B
QUAD	117	123	124	144	143	1	1.800E+01	7.200E+01		1.125E+00	M+B
QUAD	118	124	125	145	144	1	1.800E+01	7.200E+01		1.125E+00	M+B
QUAD	119	125	126	146	145	1	1.800E+01	7.200E+01		1.125E+00	M+B
QUAD	120	126	127	147	146	1	1.800E+01	7.200E+01		1.125E+00	M+B
QUAD	121	127	128	148	147	1	1.800E+01	7.200E+01		1.125E+00	M+B
QUAD	122	128	129	149	148	1	1.800E+01	6.400E+01		1.000E+00	M+B
QUAD	123	129	130	150	149	1	1.800E+01	4.800E+01		7.500E-01	M+B
QUAD	124	130	131	151	150	1	1.800E+01	4.400E+01		6.875E-01	M+B
QUAD	125	131	132	152	151	1	1.800E+01	7.600E+01		1.188E+00	M+B
QUAD	126	132	133	153	152	1	1.800E+01	7.200E+01		1.125E+00	M+B
QUAD	127	133	134	154	153	1	1.800E+01	7.200E+01		1.125E+00	M+B
QUAD	128	134	135	155	154	1	1.800E+01	5.600E+01		8.750E-01	M+B
QUAD	129	135	136	156	155	1	1.800E+01	4.800E+01		7.500E-01	M+B
QUAD	130	136	137	157	156	1	1.800E+01	4.800E+01		7.500E-01	M+B
QUAD	131	137	138	158	157	1	1.800E+01	6.400E+01		1.000E+00	M+B
QUAD	132	138	139	159	158	1	1.800E+01	5.200E+01		8.125E-01	M+B
QUAD	133	139	140	160	159	1	1.800E+01	5.200E+01		8.125E-01	M+B
QUAD	134	141	142	162	161	1	1.800E+01	4.613E+01		1.756E+00	M+B
QUAD	135	142	143	163	162	1	1.800E+01	4.613E+01		1.756E+00	M+B
QUAD	136	143	144	164	163	1	1.800E+01	4.613E+01		1.756E+00	M+B
QUAD	137	144	145	165	164	1	1.800E+01	4.613E+01		1.756E+00	M+B
QUAD	138	145	146	166	165	1	1.800E+01	4.613E+01		1.756E+00	M+B

========== I M A G E S 3 D ==========
= Copyright (c) 1984 Celestial Software Inc. =
==========

CHECK GEOMETRY Version 2.0 07/01/90

	Plate No.	Nodes I	J	K	L	Mat No.	Thickness	Area	Shear Web Thickness	Aspect Ratio	Plate Type
QUAD	139	146	147	167	166	1	1.800E+01	4.613E+01		1.756E+00	M+B
QUAD	140	147	148	168	167	1	1.800E+01	4.613E+01		1.756E+00	M+B
QUAD	141	148	149	169	168	1	1.800E+01	4.100E+01		1.561E+00	M+B
QUAD	142	149	150	170	169	1	1.800E+01	3.075E+01		1.171E+00	M+B
QUAD	143	150	151	171	170	1	1.800E+01	2.819E+01		1.073E+00	M+B
QUAD	144	151	152	172	171	1	1.800E+01	4.869E+01		1.854E+00	M+B
QUAD	145	152	153	173	172	1	1.800E+01	4.613E+01		1.756E+00	M+B
QUAD	146	153	154	174	173	1	1.800E+01	4.613E+01		1.756E+00	M+B
QUAD	147	154	155	175	174	1	1.800E+01	3.588E+01		1.366E+00	M+B
QUAD	148	155	156	176	175	1	1.800E+01	3.075E+01		1.171E+00	M+B
QUAD	149	156	157	177	176	1	1.800E+01	3.075E+01		1.171E+00	M+B
QUAD	150	157	158	178	177	1	1.800E+01	4.100E+01		1.561E+00	M+B
QUAD	151	158	159	179	178	1	1.800E+01	4.591E+01		9.604E-01	M+B
QUAD	152	159	160	180	179	1	1.800E+01	5.850E+01		7.222E-01	M+B
QUAD	153	161	162	182	181	1	1.800E+01	7.088E+01		1.143E+00	M+B
QUAD	154	162	163	183	182	1	1.800E+01	7.088E+01		1.143E+00	M+B
QUAD	155	163	164	184	183	1	1.800E+01	7.088E+01		1.143E+00	M+B
QUAD	156	164	165	185	184	1	1.800E+01	7.088E+01		1.143E+00	M+B
QUAD	157	165	166	186	185	1	1.800E+01	7.088E+01		1.143E+00	M+B
QUAD	158	166	167	187	186	1	1.800E+01	7.088E+01		1.143E+00	M+B
QUAD	159	167	168	188	187	1	1.800E+01	7.088E+01		1.143E+00	M+B
QUAD	160	168	169	189	188	1	1.800E+01	6.300E+01		1.016E+00	M+B
QUAD	161	169	170	190	189	1	1.800E+01	4.725E+01		7.619E-01	M+B
QUAD	162	170	171	191	190	1	1.800E+01	4.331E+01		6.984E-01	M+B
QUAD	163	171	172	192	191	1	1.800E+01	7.481E+01		1.206E+00	M+B
QUAD	164	172	173	193	192	1	1.800E+01	7.088E+01		1.143E+00	M+B
QUAD	165	173	174	194	193	1	1.800E+01	7.088E+01		1.143E+00	M+B
QUAD	166	174	175	195	194	1	1.800E+01	5.513E+01		8.889E-01	M+B
QUAD	167	175	176	196	195	1	1.800E+01	4.725E+01		7.619E-01	M+B
QUAD	168	176	177	197	196	1	1.800E+01	4.725E+01		7.619E-01	M+B
QUAD	169	177	178	198	197	1	1.800E+01	6.300E+01		1.016E+00	M+B
QUAD	170	178	179	199	198	1	1.800E+01	3.859E+01		1.142E+00	M+B
QUAD	171	179	180	200	199	1	1.800E+01	2.953E+01		1.802E+00	M+B
QUAD	172	181	182	202	201	1	1.800E+01	6.154E+01		8.294E-01	M+B
QUAD	173	182	183	203	202	1	1.800E+01	8.000E+01		1.060E+00	M+B
QUAD	174	183	184	204	203	1	1.800E+01	8.000E+01		1.170E+00	M+B
QUAD	175	184	185	205	204	1	1.800E+01	8.000E+01		1.240E+00	M+B
QUAD	176	185	186	206	205	1	1.800E+01	7.200E+01		1.125E+00	M+B
QUAD	177	186	187	207	206	1	1.800E+01	7.200E+01		1.125E+00	M+B
QUAD	178	187	188	208	207	1	1.800E+01	7.200E+01		1.125E+00	M+B
QUAD	179	188	189	209	208	1	1.800E+01	6.400E+01		1.000E+00	M+B

========== I M A G E S 3 D ==========
= Copyright (c) 1984 Celestial Software Inc. =
==========

CHECK GEOMETRY Version 2.0 07/01/90

	Plate No.	Nodes I	J	K	L	Mat No.	Thickness	Area	Shear Web Thickness	Aspect Ratio	Plate Type
QUAD	180	189	190	210	209	1	1.800E+01	4.800E+01		7.500E-01	M+B
QUAD	181	190	191	211	210	1	1.800E+01	4.400E+01		6.875E-01	M+B
QUAD	182	191	192	212	211	1	1.800E+01	7.600E+01		1.188E+00	M+B
QUAD	183	192	193	213	212	1	1.800E+01	7.200E+01		1.125E+00	M+B
QUAD	184	193	194	214	213	1	1.800E+01	7.200E+01		1.125E+00	M+B
QUAD	185	194	195	215	214	1	1.800E+01	5.600E+01		8.750E-01	M+B
QUAD	186	195	196	216	215	1	1.800E+01	4.800E+01		7.500E-01	M+B
QUAD	187	196	197	217	216	1	1.800E+01	4.800E+01		7.500E-01	M+B
QUAD	188	197	198	218	217	1	1.800E+01	6.400E+01		1.000E+00	M+B
QUAD	189	198	199	219	218	1	1.800E+01	6.200E+01		9.571E-01	M+B
QUAD	190	199	200	220	219	1	1.800E+01	7.024E+01		1.027E+00	M+B
QUAD	191	201	202	222	221	1	1.800E+01	3.721E+01		1.456E+00	M+B
QUAD	192	202	203	223	222	1	1.800E+01	5.500E+01		2.200E+00	M+B
QUAD	193	203	204	224	223	1	1.800E+01	5.500E+01		2.200E+00	M+B
QUAD	194	204	205	225	224	1	1.800E+01	5.500E+01		2.200E+00	M+B
QUAD	195	205	206	226	225	1	1.800E+01	4.500E+01		1.800E+00	M+B
QUAD	196	206	207	227	226	1	1.800E+01	4.500E+01		1.800E+00	M+B
QUAD	197	207	208	228	227	1	1.800E+01	4.500E+01		1.800E+00	M+B
QUAD	198	208	209	229	228	1	1.800E+01	4.000E+01		1.600E+00	M+B
QUAD	199	209	210	230	229	1	1.800E+01	3.000E+01		1.200E+00	M+B
QUAD	200	210	211	231	230	1	1.800E+01	2.750E+01		1.100E+00	M+B
QUAD	201	211	212	232	231	1	1.800E+01	4.750E+01		1.900E+00	M+B
QUAD	202	212	213	233	232	1	1.800E+01	4.500E+01		1.800E+00	M+B
QUAD	203	213	214	234	233	1	1.800E+01	4.500E+01		1.800E+00	M+B
QUAD	204	214	215	235	234	1	1.800E+01	3.500E+01		1.400E+00	M+B
QUAD	205	215	216	236	235	1	1.800E+01	3.000E+01		1.200E+00	M+B
QUAD	206	216	217	237	236	1	1.800E+01	3.000E+01		1.200E+00	M+B
QUAD	207	217	218	238	237	1	1.800E+01	4.000E+01		1.600E+00	M+B
QUAD	208	218	219	239	238	1	1.800E+01	4.500E+01		1.800E+00	M+B
QUAD	209	219	220	240	239	1	1.800E+01	5.199E+01		2.031E+00	M+B
QUAD	210	221	222	242	241	2	1.250E+01	7.000E+01		1.093E+00	M+B
QUAD	211	222	223	243	242	2	1.250E+01	8.800E+01		1.375E+00	M+B
QUAD	212	223	224	244	243	2	1.250E+01	8.800E+01		1.375E+00	M+B
QUAD	213	224	225	245	244	2	1.250E+01	8.800E+01		1.375E+00	M+B
QUAD	214	225	226	246	245	2	1.250E+01	7.200E+01		1.125E+00	M+B
QUAD	215	226	227	247	246	2	1.250E+01	7.200E+01		1.125E+00	M+B
QUAD	216	227	228	248	247	2	1.250E+01	7.200E+01		1.125E+00	M+B
QUAD	217	228	229	249	248	2	1.250E+01	6.400E+01		1.000E+00	M+B
QUAD	218	229	230	250	249	2	1.250E+01	4.800E+01		7.500E-01	M+B
QUAD	219	230	231	251	250	2	1.250E+01	4.400E+01		6.875E-01	M+B
QUAD	220	231	232	252	251	2	1.250E+01	7.600E+01		1.188E+00	M+B

========== I M A G E S 3 D ==========
= Copyright (c) 1984 Celestial Software Inc. =
==========

CHECK GEOMETRY Version 2.0 07/01/90

	Plate No.	Nodes I	J	K	L	Mat No.	Thickness	Area	Shear Web Thickness	Aspect Ratio	Plate Type
QUAD	221	232	233	253	252	2	1.250E+01	7.200E+01		1.125E+00	M+B
QUAD	222	233	234	254	253	2	1.250E+01	7.200E+01		1.125E+00	M+B
QUAD	223	234	235	255	254	2	1.250E+01	5.600E+01		8.750E-01	M+B
QUAD	224	235	236	256	255	2	1.250E+01	4.800E+01		7.500E-01	M+B
QUAD	225	236	237	257	256	2	1.250E+01	4.800E+01		7.500E-01	M+B
QUAD	226	237	238	258	257	2	1.250E+01	6.400E+01		1.000E+00	M+B
QUAD	227	238	239	259	258	2	1.250E+01	7.200E+01		1.125E+00	M+B
QUAD	228	239	240	260	259	2	1.250E+01	9.395E+01		1.467E+00	M+B
QUAD	229	241	242	262	261	2	1.250E+01	7.400E+01		1.156E+00	M+B
QUAD	230	242	243	263	262	2	1.250E+01	8.800E+01		1.375E+00	M+B
QUAD	231	243	244	264	263	2	1.250E+01	8.800E+01		1.375E+00	M+B
QUAD	232	244	245	265	264	2	1.250E+01	8.800E+01		1.375E+00	M+B
QUAD	233	245	246	266	265	2	1.250E+01	7.200E+01		1.125E+00	M+B
QUAD	234	246	247	267	266	2	1.250E+01	7.200E+01		1.125E+00	M+B
QUAD	235	247	248	268	267	2	1.250E+01	7.200E+01		1.125E+00	M+B
QUAD	236	248	249	269	268	2	1.250E+01	6.400E+01		1.000E+00	M+B
QUAD	237	249	250	270	269	2	1.250E+01	4.800E+01		7.500E-01	M+B
QUAD	238	250	251	271	270	2	1.250E+01	4.400E+01		6.875E-01	M+B
QUAD	239	251	252	272	271	2	1.250E+01	7.600E+01		1.188E+00	M+B
QUAD	240	252	253	273	272	2	1.250E+01	7.200E+01		1.125E+00	M+B
QUAD	241	253	254	274	273	2	1.250E+01	7.200E+01		1.125E+00	M+B
QUAD	242	254	255	275	274	2	1.250E+01	5.600E+01		8.750E-01	M+B
QUAD	243	255	256	276	275	2	1.250E+01	4.800E+01		7.500E-01	M+B
QUAD	244	256	257	277	276	2	1.250E+01	4.800E+01		7.500E-01	M+B
QUAD	245	257	258	278	277	2	1.250E+01	6.400E+01		1.000E+00	M+B
QUAD	246	258	259	279	278	2	1.250E+01	7.200E+01		1.125E+00	M+B
QUAD	247	259	260	280	279	2	1.250E+01	9.795E+01		1.530E+00	M+B
QUAD	248	261	262	282	281	2	1.250E+01	7.800E+01		1.218E+00	M+B
QUAD	249	262	263	283	282	2	1.250E+01	8.800E+01		1.375E+00	M+B
QUAD	250	263	264	284	283	2	1.250E+01	8.800E+01		1.375E+00	M+B
QUAD	251	264	265	285	284	2	1.250E+01	8.800E+01		1.375E+00	M+B
QUAD	252	265	266	286	285	2	1.250E+01	7.200E+01		1.125E+00	M+B
QUAD	253	266	267	287	286	2	1.250E+01	7.200E+01		1.125E+00	M+B
QUAD	254	267	268	288	287	2	1.250E+01	7.200E+01		1.125E+00	M+B
QUAD	255	268	269	289	288	2	1.250E+01	6.400E+01		1.000E+00	M+B
QUAD	256	269	270	290	289	2	1.250E+01	4.800E+01		7.500E-01	M+B
QUAD	257	270	271	291	290	2	1.250E+01	4.400E+01		6.875E-01	M+B
QUAD	258	271	272	292	291	2	1.250E+01	7.600E+01		1.188E+00	M+B
QUAD	259	272	273	293	292	2	1.250E+01	7.200E+01		1.125E+00	M+B
QUAD	260	273	274	294	293	2	1.250E+01	7.200E+01		1.125E+00	M+B
QUAD	261	274	275	295	294	2	1.250E+01	5.600E+01		8.750E-01	M+B

========== I M A G E S 3 D ==========
= Copyright (c) 1984 Celestial Software Inc. =
==========

CHECK GEOMETRY Version 2.0 07/01/90

	Plate No.	Nodes I	J	K	L	Mat No.	Thickness	Area	Shear Web Thickness	Aspect Ratio	Plate Type
QUAD	262	275	276	296	295	2	1.250E+01	4.800E+01		7.500E-01	M+B
QUAD	263	276	277	297	296	2	1.250E+01	4.800E+01		7.500E-01	M+B
QUAD	264	277	278	298	297	2	1.250E+01	6.400E+01		1.000E+00	M+B
QUAD	265	278	279	299	298	2	1.250E+01	7.200E+01		1.125E+00	M+B
QUAD	266	279	280	300	299	2	1.250E+01	1.020E+02		1.593E+00	M+B

RESTRAINTS

Node No	Global/Local	Restraint Directions
1	GLOBAL	X Y Z RX RY RZ
2	GLOBAL	X Y Z RX RY RZ
3	GLOBAL	X Y Z RX RY RZ
4	GLOBAL	X Y Z RX RY RZ
5	GLOBAL	X Y Z RX RY RZ
6	GLOBAL	X Y Z RX RY RZ
7	GLOBAL	X Y Z RX RY RZ
8	GLOBAL	X Y Z RX RY RZ
9	GLOBAL	X Y Z RX RY RZ
10	GLOBAL	X Y Z RX RY RZ
11	GLOBAL	X Y Z RX RY RZ
12	GLOBAL	X Y Z RX RY RZ
13	GLOBAL	X Y Z RX RY RZ
14	GLOBAL	X Y Z RX RY RZ
15	GLOBAL	X Y Z RX RY RZ
16	GLOBAL	X Y Z RX RY RZ
17	GLOBAL	X Y Z RX RY RZ
18	GLOBAL	X Y Z RX RY RZ
19	GLOBAL	X Y Z RX RY RZ
20	GLOBAL	X Y Z RX RY RZ
21	GLOBAL	X Y Z RX RY RZ
40	GLOBAL	X Y Z RX RY RZ
41	GLOBAL	X Y Z RX RY RZ
60	GLOBAL	X Y Z RX RY RZ
61	GLOBAL	X Y Z RX RY RZ
80	GLOBAL	X Y Z RX RY RZ
81	GLOBAL	X Y Z RX RY RZ
100	GLOBAL	X Y Z RX RY RZ
101	GLOBAL	X Y Z RX RY RZ

========== I M A G E S 3 D ==========
= Copyright (c) 1984 Celestial Software Inc. =
==========

CHECK GEOMETRY Version 2.0 07/01/90

Node No	Global/Local	Restraint Directions
120	GLOBAL	X Y Z RX RY RZ
121	GLOBAL	X Y Z RX RY RZ
140	GLOBAL	X Y Z RX RY RZ
141	GLOBAL	X Y Z RX RY RZ
160	GLOBAL	X Y Z RX RY RZ
161	GLOBAL	X Y Z RX RY RZ
180	GLOBAL	X Y Z RX RY RZ
181	GLOBAL	X Y Z RX RY RZ
200	GLOBAL	X Y Z RX RY RZ
201	GLOBAL	X Y Z RX RY RZ
220	GLOBAL	X Y Z RX RY RZ
221	GLOBAL	X Y Z RX RY RZ
240	GLOBAL	X Y Z RX RY RZ
241	GLOBAL	X Y Z RX RY RZ
260	GLOBAL	X Y Z RX RY RZ
261	GLOBAL	X Y Z RX RY RZ
280	GLOBAL	X Y Z RX RY RZ
281	GLOBAL	X Y Z RX RY RZ
300	GLOBAL	X Y Z RX RY RZ

= Copyright (c) 1984 Celestial Software Inc. =

ASSEMBLE STIFFNESS MATRIX Version 2.0 07/01/90

ROTATIONAL DEGREES OF FREEDOM IN LOCAL COORDINATES

Node	Local T1 axis X	Y	Z	Local T2 axis X	Y	Z
22	.1000E+01	.0000E+00	.0000E+00	.0000E+00	.1000E+01	.0000E+00
23	.1000E+01	.0000E+00	.0000E+00	.0000E+00	.1000E+01	.0000E+00
24	.1000E+01	.0000E+00	.0000E+00	.0000E+00	.1000E+01	.0000E+00
25	.1000E+01	.0000E+00	.0000E+00	.0000E+00	.1000E+01	.0000E+00
26	.1000E+01	.0000E+00	.0000E+00	.0000E+00	.1000E+01	.0000E+00
27	.1000E+01	.0000E+00	.0000E+00	.0000E+00	.1000E+01	.0000E+00
28	.1000E+01	.0000E+00	.0000E+00	.0000E+00	.1000E+01	.0000E+00
29	.1000E+01	.0000E+00	.0000E+00	.0000E+00	.1000E+01	.0000E+00
30	.1000E+01	.0000E+00	.0000E+00	.0000E+00	.1000E+01	.0000E+00
31	.1000E+01	.0000E+00	.0000E+00	.0000E+00	.1000E+01	.0000E+00
32	.1000E+01	.0000E+00	.0000E+00	.0000E+00	.1000E+01	.0000E+00
33	.1000E+01	.0000E+00	.0000E+00	.0000E+00	.1000E+01	.0000E+00
34	.1000E+01	.0000E+00	.0000E+00	.0000E+00	.1000E+01	.0000E+00
35	.1000E+01	.0000E+00	.0000E+00	.0000E+00	.1000E+01	.0000E+00
36	.1000E+01	.0000E+00	.0000E+00	.0000E+00	.1000E+01	.0000E+00
37	.1000E+01	.0000E+00	.0000E+00	.0000E+00	.1000E+01	.0000E+00
38	.1000E+01	.0000E+00	.0000E+00	.0000E+00	.1000E+01	.0000E+00
39	.1000E+01	.0000E+00	.0000E+00	.0000E+00	.1000E+01	.0000E+00
42	.1000E+01	.0000E+00	.0000E+00	.0000E+00	.1000E+01	.0000E+00
43	.1000E+01	.0000E+00	.0000E+00	.0000E+00	.1000E+01	.0000E+00
44	.1000E+01	.0000E+00	.0000E+00	.0000E+00	.1000E+01	.0000E+00
45	.1000E+01	.0000E+00	.0000E+00	.0000E+00	.1000E+01	.0000E+00
46	.1000E+01	.0000E+00	.0000E+00	.0000E+00	.1000E+01	.0000E+00
47	.1000E+01	.0000E+00	.0000E+00	.0000E+00	.1000E+01	.0000E+00
48	.1000E+01	.0000E+00	.0000E+00	.0000E+00	.1000E+01	.0000E+00
49	.1000E+01	.0000E+00	.0000E+00	.0000E+00	.1000E+01	.0000E+00
50	.1000E+01	.0000E+00	.0000E+00	.0000E+00	.1000E+01	.0000E+00
51	.1000E+01	.0000E+00	.0000E+00	.0000E+00	.1000E+01	.0000E+00
52	.1000E+01	.0000E+00	.0000E+00	.0000E+00	.1000E+01	.0000E+00
53	.1000E+01	.0000E+00	.0000E+00	.0000E+00	.1000E+01	.0000E+00
54	.1000E+01	.0000E+00	.0000E+00	.0000E+00	.1000E+01	.0000E+00
55	.1000E+01	.0000E+00	.0000E+00	.0000E+00	.1000E+01	.0000E+00
56	.1000E+01	.0000E+00	.0000E+00	.0000E+00	.1000E+01	.0000E+00
57	.1000E+01	.0000E+00	.0000E+00	.0000E+00	.1000E+01	.0000E+00
58	.1000E+01	.0000E+00	.0000E+00	.0000E+00	.1000E+01	.0000E+00
59	.1000E+01	.0000E+00	.0000E+00	.0000E+00	.1000E+01	.0000E+00
62	.1000E+01	.0000E+00	.0000E+00	.0000E+00	.1000E+01	.0000E+00
63	.1000E+01	.0000E+00	.0000E+00	.0000E+00	.1000E+01	.0000E+00
64	.1000E+01	.0000E+00	.0000E+00	.0000E+00	.1000E+01	.0000E+00
65	.1000E+01	.0000E+00	.0000E+00	.0000E+00	.1000E+01	.0000E+00

= Copyright (c) 1984 Celestial Software Inc. =

ASSEMBLE STIFFNESS MATRIX Version 2.0 07/01/90

Node	Local T1 axis X	Y	Z	Local T2 axis X	Y	Z
66	.1000E+01	.0000E+00	.0000E+00	.0000E+00	.1000E+01	.0000E+00
67	.1000E+01	.0000E+00	.0000E+00	.0000E+00	.1000E+01	.0000E+00
68	.1000E+01	.0000E+00	.0000E+00	.0000E+00	.1000E+01	.0000E+00
69	.1000E+01	.0000E+00	.0000E+00	.0000E+00	.1000E+01	.0000E+00
70	.1000E+01	.0000E+00	.0000E+00	.0000E+00	.1000E+01	.0000E+00
71	.1000E+01	.0000E+00	.0000E+00	.0000E+00	.1000E+01	.0000E+00
72	.1000E+01	.0000E+00	.0000E+00	.0000E+00	.1000E+01	.0000E+00
73	.1000E+01	.0000E+00	.0000E+00	.0000E+00	.1000E+01	.0000E+00
74	.1000E+01	.0000E+00	.0000E+00	.0000E+00	.1000E+01	.0000E+00
75	.1000E+01	.0000E+00	.0000E+00	.0000E+00	.1000E+01	.0000E+00
76	.1000E+01	.0000E+00	.0000E+00	.0000E+00	.1000E+01	.0000E+00
77	.1000E+01	.0000E+00	.0000E+00	.0000E+00	.1000E+01	.0000E+00
78	.1000E+01	.0000E+00	.0000E+00	.0000E+00	.1000E+01	.0000E+00
79	.1000E+01	.0000E+00	.0000E+00	.0000E+00	.1000E+01	.0000E+00
82	.1000E+01	.0000E+00	.0000E+00	.0000E+00	.1000E+01	.0000E+00
83	.1000E+01	.0000E+00	.0000E+00	.0000E+00	.1000E+01	.0000E+00
84	.1000E+01	.0000E+00	.0000E+00	.0000E+00	.1000E+01	.0000E+00
85	.1000E+01	.0000E+00	.0000E+00	.0000E+00	.1000E+01	.0000E+00
86	.1000E+01	.0000E+00	.0000E+00	.0000E+00	.1000E+01	.0000E+00
87	.1000E+01	.0000E+00	.0000E+00	.0000E+00	.1000E+01	.0000E+00
88	.1000E+01	.0000E+00	.0000E+00	.0000E+00	.1000E+01	.0000E+00
89	.1000E+01	.0000E+00	.0000E+00	.0000E+00	.1000E+01	.0000E+00
90	.1000E+01	.0000E+00	.0000E+00	.0000E+00	.1000E+01	.0000E+00
91	.1000E+01	.0000E+00	.0000E+00	.0000E+00	.1000E+01	.0000E+00
92	.1000E+01	.0000E+00	.0000E+00	.0000E+00	.1000E+01	.0000E+00
93	.1000E+01	.0000E+00	.0000E+00	.0000E+00	.1000E+01	.0000E+00
94	.1000E+01	.0000E+00	.0000E+00	.0000E+00	.1000E+01	.0000E+00
95	.1000E+01	.0000E+00	.0000E+00	.0000E+00	.1000E+01	.0000E+00
96	.1000E+01	.0000E+00	.0000E+00	.0000E+00	.1000E+01	.0000E+00
97	.1000E+01	.0000E+00	.0000E+00	.0000E+00	.1000E+01	.0000E+00
98	.1000E+01	.0000E+00	.0000E+00	.0000E+00	.1000E+01	.0000E+00
99	.1000E+01	.0000E+00	.0000E+00	.0000E+00	.1000E+01	.0000E+00
102	.1000E+01	.0000E+00	.0000E+00	.0000E+00	.1000E+01	.0000E+00
103	.1000E+01	.0000E+00	.0000E+00	.0000E+00	.1000E+01	.0000E+00
104	.1000E+01	.0000E+00	.0000E+00	.0000E+00	.1000E+01	.0000E+00
105	.1000E+01	.0000E+00	.0000E+00	.0000E+00	.1000E+01	.0000E+00
106	.1000E+01	.0000E+00	.0000E+00	.0000E+00	.1000E+01	.0000E+00
107	.1000E+01	.0000E+00	.0000E+00	.0000E+00	.1000E+01	.0000E+00
108	.1000E+01	.0000E+00	.0000E+00	.0000E+00	.1000E+01	.0000E+00
109	.1000E+01	.0000E+00	.0000E+00	.0000E+00	.1000E+01	.0000E+00
110	.1000E+01	.0000E+00	.0000E+00	.0000E+00	.1000E+01	.0000E+00

KAISER ENGINEERS HANFORD S/N:801854 08/24/95
PAGE 19 Run ID=DD82417 14:40:45

= Copyright (c) 1984 Celestial Software Inc. =

ASSEMBLE STIFFNESS MATRIX Version 2.0 07/01/90

Node	Local T1 axis X	Y	Z	/	Local T2 axis X	Y	Z
111	.1000E+01	.0000E+00	.0000E+00	/	.0000E+00	.1000E+01	.0000E+00
112	.1000E+01	.0000E+00	.0000E+00	/	.0000E+00	.1000E+01	.0000E+00
113	.1000E+01	.0000E+00	.0000E+00	/	.0000E+00	.1000E+01	.0000E+00
114	.1000E+01	.0000E+00	.0000E+00	/	.0000E+00	.1000E+01	.0000E+00
115	.1000E+01	.0000E+00	.0000E+00	/	.0000E+00	.1000E+01	.0000E+00
116	.1000E+01	.0000E+00	.0000E+00	/	.0000E+00	.1000E+01	.0000E+00
117	.1000E+01	.0000E+00	.0000E+00	/	.0000E+00	.1000E+01	.0000E+00
118	.1000E+01	.0000E+00	.0000E+00	/	.0000E+00	.1000E+01	.0000E+00
119	.1000E+01	.0000E+00	.0000E+00	/	.0000E+00	.1000E+01	.0000E+00
122	.1000E+01	.0000E+00	.0000E+00	/	.0000E+00	.1000E+01	.0000E+00
123	.1000E+01	.0000E+00	.0000E+00	/	.0000E+00	.1000E+01	.0000E+00
124	.1000E+01	.0000E+00	.0000E+00	/	.0000E+00	.1000E+01	.0000E+00
125	.1000E+01	.0000E+00	.0000E+00	/	.0000E+00	.1000E+01	.0000E+00
126	.1000E+01	.0000E+00	.0000E+00	/	.0000E+00	.1000E+01	.0000E+00
127	.1000E+01	.0000E+00	.0000E+00	/	.0000E+00	.1000E+01	.0000E+00
128	.1000E+01	.0000E+00	.0000E+00	/	.0000E+00	.1000E+01	.0000E+00
129	.1000E+01	.0000E+00	.0000E+00	/	.0000E+00	.1000E+01	.0000E+00
130	.1000E+01	.0000E+00	.0000E+00	/	.0000E+00	.1000E+01	.0000E+00
131	.1000E+01	.0000E+00	.0000E+00	/	.0000E+00	.1000E+01	.0000E+00
132	.1000E+01	.0000E+00	.0000E+00	/	.0000E+00	.1000E+01	.0000E+00
133	.1000E+01	.0000E+00	.0000E+00	/	.0000E+00	.1000E+01	.0000E+00
134	.1000E+01	.0000E+00	.0000E+00	/	.0000E+00	.1000E+01	.0000E+00
135	.1000E+01	.0000E+00	.0000E+00	/	.0000E+00	.1000E+01	.0000E+00
136	.1000E+01	.0000E+00	.0000E+00	/	.0000E+00	.1000E+01	.0000E+00
137	.1000E+01	.0000E+00	.0000E+00	/	.0000E+00	.1000E+01	.0000E+00
138	.1000E+01	.0000E+00	.0000E+00	/	.0000E+00	.1000E+01	.0000E+00
139	.1000E+01	.0000E+00	.0000E+00	/	.0000E+00	.1000E+01	.0000E+00
142	.1000E+01	.0000E+00	.0000E+00	/	.0000E+00	.1000E+01	.0000E+00
143	.1000E+01	.0000E+00	.0000E+00	/	.0000E+00	.1000E+01	.0000E+00
144	.1000E+01	.0000E+00	.0000E+00	/	.0000E+00	.1000E+01	.0000E+00
145	.1000E+01	.0000E+00	.0000E+00	/	.0000E+00	.1000E+01	.0000E+00
146	.1000E+01	.0000E+00	.0000E+00	/	.0000E+00	.1000E+01	.0000E+00
147	.1000E+01	.0000E+00	.0000E+00	/	.0000E+00	.1000E+01	.0000E+00
148	.1000E+01	.0000E+00	.0000E+00	/	.0000E+00	.1000E+01	.0000E+00
149	.1000E+01	.0000E+00	.0000E+00	/	.0000E+00	.1000E+01	.0000E+00
150	.1000E+01	.0000E+00	.0000E+00	/	.0000E+00	.1000E+01	.0000E+00
151	.1000E+01	.0000E+00	.0000E+00	/	.0000E+00	.1000E+01	.0000E+00
152	.1000E+01	.0000E+00	.0000E+00	/	.0000E+00	.1000E+01	.0000E+00
153	.1000E+01	.0000E+00	.0000E+00	/	.0000E+00	.1000E+01	.0000E+00
154	.1000E+01	.0000E+00	.0000E+00	/	.0000E+00	.1000E+01	.0000E+00
155	.1000E+01	.0000E+00	.0000E+00	/	.0000E+00	.1000E+01	.0000E+00

KAISER ENGINEERS HANFORD S/N:801854 08/24/95
PAGE 20 Run ID=DD82417 14:40:45

= Copyright (c) 1984 Celestial Software Inc. =

ASSEMBLE STIFFNESS MATRIX Version 2.0 07/01/90

Node	Local T1 axis X	Y	Z	/	Local T2 axis X	Y	Z
156	.1000E+01	.0000E+00	.0000E+00	/	.0000E+00	.1000E+01	.0000E+00
157	.1000E+01	.0000E+00	.0000E+00	/	.0000E+00	.1000E+01	.0000E+00
158	.1000E+01	.0000E+00	.0000E+00	/	.0000E+00	.1000E+01	.0000E+00
159	.1000E+01	.0000E+00	.0000E+00	/	.0000E+00	.1000E+01	.0000E+00
162	.1000E+01	.0000E+00	.0000E+00	/	.0000E+00	.1000E+01	.0000E+00
163	.1000E+01	.0000E+00	.0000E+00	/	.0000E+00	.1000E+01	.0000E+00
164	.1000E+01	.0000E+00	.0000E+00	/	.0000E+00	.1000E+01	.0000E+00
165	.1000E+01	.0000E+00	.0000E+00	/	.0000E+00	.1000E+01	.0000E+00
166	.1000E+01	.0000E+00	.0000E+00	/	.0000E+00	.1000E+01	.0000E+00
167	.1000E+01	.0000E+00	.0000E+00	/	.0000E+00	.1000E+01	.0000E+00
168	.1000E+01	.0000E+00	.0000E+00	/	.0000E+00	.1000E+01	.0000E+00
169	.1000E+01	.0000E+00	.0000E+00	/	.0000E+00	.1000E+01	.0000E+00
170	.1000E+01	.0000E+00	.0000E+00	/	.0000E+00	.1000E+01	.0000E+00
171	.1000E+01	.0000E+00	.0000E+00	/	.0000E+00	.1000E+01	.0000E+00
172	.1000E+01	.0000E+00	.0000E+00	/	.0000E+00	.1000E+01	.0000E+00
173	.1000E+01	.0000E+00	.0000E+00	/	.0000E+00	.1000E+01	.0000E+00
174	.1000E+01	.0000E+00	.0000E+00	/	.0000E+00	.1000E+01	.0000E+00
175	.1000E+01	.0000E+00	.0000E+00	/	.0000E+00	.1000E+01	.0000E+00
176	.1000E+01	.0000E+00	.0000E+00	/	.0000E+00	.1000E+01	.0000E+00
177	.1000E+01	.0000E+00	.0000E+00	/	.0000E+00	.1000E+01	.0000E+00
178	.9897E+00	.1431E+00	.0000E+00	/	-.1431E+00	.9897E+00	.0000E+00
179	.9968E+00	.8027E-01	.0000E+00	/	-.8027E-01	.9968E+00	.0000E+00
182	.1000E+01	.0000E+00	.0000E+00	/	.0000E+00	.1000E+01	.0000E+00
183	.1000E+01	.0000E+00	.0000E+00	/	.0000E+00	.1000E+01	.0000E+00
184	.1000E+01	.0000E+00	.0000E+00	/	.0000E+00	.1000E+01	.0000E+00
185	.1000E+01	.0000E+00	.0000E+00	/	.0000E+00	.1000E+01	.0000E+00
186	.1000E+01	.0000E+00	.0000E+00	/	.0000E+00	.1000E+01	.0000E+00
187	.1000E+01	.0000E+00	.0000E+00	/	.0000E+00	.1000E+01	.0000E+00
188	.1000E+01	.0000E+00	.0000E+00	/	.0000E+00	.1000E+01	.0000E+00
189	.1000E+01	.0000E+00	.0000E+00	/	.0000E+00	.1000E+01	.0000E+00
190	.1000E+01	.0000E+00	.0000E+00	/	.0000E+00	.1000E+01	.0000E+00
191	.1000E+01	.0000E+00	.0000E+00	/	.0000E+00	.1000E+01	.0000E+00
192	.1000E+01	.0000E+00	.0000E+00	/	.0000E+00	.1000E+01	.0000E+00
193	.1000E+01	.0000E+00	.0000E+00	/	.0000E+00	.1000E+01	.0000E+00
194	.1000E+01	.0000E+00	.0000E+00	/	.0000E+00	.1000E+01	.0000E+00
195	.1000E+01	.0000E+00	.0000E+00	/	.0000E+00	.1000E+01	.0000E+00
196	.1000E+01	.0000E+00	.0000E+00	/	.0000E+00	.1000E+01	.0000E+00
197	.1000E+01	.0000E+00	.0000E+00	/	.0000E+00	.1000E+01	.0000E+00
198	.9932E+00	.1168E+00	.0000E+00	/	-.1168E+00	.9932E+00	.0000E+00
199	.9971E+00	.7651E-01	.0000E+00	/	-.7651E-01	.9971E+00	.0000E+00
202	.1000E+01	.0000E+00	.0000E+00	/	.0000E+00	.1000E+01	.0000E+00

========== I M A G E S 3 D ==========
= Copyright (c) 1984 Celestial Software Inc. =
==========

ASSEMBLE STIFFNESS MATRIX Version 2.0 07/01/90

Node	Local T1 axis X	Y	Z	/	Local T2 axis X	Y	Z
203	.1000E+01	.0000E+00	.0000E+00	/	.0000E+00	.1000E+01	.0000E+00
204	.1000E+01	.0000E+00	.0000E+00	/	.0000E+00	.1000E+01	.0000E+00
205	.1000E+01	.0000E+00	.0000E+00	/	.0000E+00	.1000E+01	.0000E+00
206	.1000E+01	.0000E+00	.0000E+00	/	.0000E+00	.1000E+01	.0000E+00
207	.1000E+01	.0000E+00	.0000E+00	/	.0000E+00	.1000E+01	.0000E+00
208	.1000E+01	.0000E+00	.0000E+00	/	.0000E+00	.1000E+01	.0000E+00
209	.1000E+01	.0000E+00	.0000E+00	/	.0000E+00	.1000E+01	.0000E+00
210	.1000E+01	.0000E+00	.0000E+00	/	.0000E+00	.1000E+01	.0000E+00
211	.1000E+01	.0000E+00	.0000E+00	/	.0000E+00	.1000E+01	.0000E+00
212	.1000E+01	.0000E+00	.0000E+00	/	.0000E+00	.1000E+01	.0000E+00
213	.1000E+01	.0000E+00	.0000E+00	/	.0000E+00	.1000E+01	.0000E+00
214	.1000E+01	.0000E+00	.0000E+00	/	.0000E+00	.1000E+01	.0000E+00
215	.1000E+01	.0000E+00	.0000E+00	/	.0000E+00	.1000E+01	.0000E+00
216	.1000E+01	.0000E+00	.0000E+00	/	.0000E+00	.1000E+01	.0000E+00
217	.1000E+01	.0000E+00	.0000E+00	/	.0000E+00	.1000E+01	.0000E+00
218	.1000E+01	.0000E+00	.0000E+00	/	.0000E+00	.1000E+01	.0000E+00
219	.1000E+01	.0000E+00	.0000E+00	/	.0000E+00	.1000E+01	.0000E+00
222	.1000E+01	.0000E+00	.0000E+00	/	.0000E+00	.1000E+01	.0000E+00
223	.1000E+01	.0000E+00	.0000E+00	/	.0000E+00	.1000E+01	.0000E+00
224	.1000E+01	.0000E+00	.0000E+00	/	.0000E+00	.1000E+01	.0000E+00
225	.1000E+01	.0000E+00	.0000E+00	/	.0000E+00	.1000E+01	.0000E+00
226	.1000E+01	.0000E+00	.0000E+00	/	.0000E+00	.1000E+01	.0000E+00
227	.1000E+01	.0000E+00	.0000E+00	/	.0000E+00	.1000E+01	.0000E+00
228	.1000E+01	.0000E+00	.0000E+00	/	.0000E+00	.1000E+01	.0000E+00
229	.1000E+01	.0000E+00	.0000E+00	/	.0000E+00	.1000E+01	.0000E+00
230	.1000E+01	.0000E+00	.0000E+00	/	.0000E+00	.1000E+01	.0000E+00
231	.1000E+01	.0000E+00	.0000E+00	/	.0000E+00	.1000E+01	.0000E+00
232	.1000E+01	.0000E+00	.0000E+00	/	.0000E+00	.1000E+01	.0000E+00
233	.1000E+01	.0000E+00	.0000E+00	/	.0000E+00	.1000E+01	.0000E+00
234	.1000E+01	.0000E+00	.0000E+00	/	.0000E+00	.1000E+01	.0000E+00
235	.1000E+01	.0000E+00	.0000E+00	/	.0000E+00	.1000E+01	.0000E+00
236	.1000E+01	.0000E+00	.0000E+00	/	.0000E+00	.1000E+01	.0000E+00
237	.1000E+01	.0000E+00	.0000E+00	/	.0000E+00	.1000E+01	.0000E+00
238	.1000E+01	.0000E+00	.0000E+00	/	.0000E+00	.1000E+01	.0000E+00
239	.1000E+01	.0000E+00	.0000E+00	/	.0000E+00	.1000E+01	.0000E+00
242	.1000E+01	.0000E+00	.0000E+00	/	.0000E+00	.1000E+01	.0000E+00
243	.1000E+01	.0000E+00	.0000E+00	/	.0000E+00	.1000E+01	.0000E+00
244	.1000E+01	.0000E+00	.0000E+00	/	.0000E+00	.1000E+01	.0000E+00
245	.1000E+01	.0000E+00	.0000E+00	/	.0000E+00	.1000E+01	.0000E+00
246	.1000E+01	.0000E+00	.0000E+00	/	.0000E+00	.1000E+01	.0000E+00
247	.1000E+01	.0000E+00	.0000E+00	/	.0000E+00	.1000E+01	.0000E+00

========== I M A G E S 3 D ==========
= Copyright (c) 1984 Celestial Software Inc. =
==========

ASSEMBLE STIFFNESS MATRIX Version 2.0 07/01/90

Node	Local T1 axis X	Y	Z	/	Local T2 axis X	Y	Z
248	.1000E+01	.0000E+00	.0000E+00	/	.0000E+00	.1000E+01	.0000E+00
249	.1000E+01	.0000E+00	.0000E+00	/	.0000E+00	.1000E+01	.0000E+00
250	.1000E+01	.0000E+00	.0000E+00	/	.0000E+00	.1000E+01	.0000E+00
251	.1000E+01	.0000E+00	.0000E+00	/	.0000E+00	.1000E+01	.0000E+00
252	.1000E+01	.0000E+00	.0000E+00	/	.0000E+00	.1000E+01	.0000E+00
253	.1000E+01	.0000E+00	.0000E+00	/	.0000E+00	.1000E+01	.0000E+00
254	.1000E+01	.0000E+00	.0000E+00	/	.0000E+00	.1000E+01	.0000E+00
255	.1000E+01	.0000E+00	.0000E+00	/	.0000E+00	.1000E+01	.0000E+00
256	.1000E+01	.0000E+00	.0000E+00	/	.0000E+00	.1000E+01	.0000E+00
257	.1000E+01	.0000E+00	.0000E+00	/	.0000E+00	.1000E+01	.0000E+00
258	.1000E+01	.0000E+00	.0000E+00	/	.0000E+00	.1000E+01	.0000E+00
259	.1000E+01	.0000E+00	.0000E+00	/	.0000E+00	.1000E+01	.0000E+00
262	.1000E+01	.0000E+00	.0000E+00	/	.0000E+00	.1000E+01	.0000E+00
263	.1000E+01	.0000E+00	.0000E+00	/	.0000E+00	.1000E+01	.0000E+00
264	.1000E+01	.0000E+00	.0000E+00	/	.0000E+00	.1000E+01	.0000E+00
265	.1000E+01	.0000E+00	.0000E+00	/	.0000E+00	.1000E+01	.0000E+00
266	.1000E+01	.0000E+00	.0000E+00	/	.0000E+00	.1000E+01	.0000E+00
267	.1000E+01	.0000E+00	.0000E+00	/	.0000E+00	.1000E+01	.0000E+00
268	.1000E+01	.0000E+00	.0000E+00	/	.0000E+00	.1000E+01	.0000E+00
269	.1000E+01	.0000E+00	.0000E+00	/	.0000E+00	.1000E+01	.0000E+00
270	.1000E+01	.0000E+00	.0000E+00	/	.0000E+00	.1000E+01	.0000E+00
271	.1000E+01	.0000E+00	.0000E+00	/	.0000E+00	.1000E+01	.0000E+00
272	.1000E+01	.0000E+00	.0000E+00	/	.0000E+00	.1000E+01	.0000E+00
273	.1000E+01	.0000E+00	.0000E+00	/	.0000E+00	.1000E+01	.0000E+00
274	.1000E+01	.0000E+00	.0000E+00	/	.0000E+00	.1000E+01	.0000E+00
275	.1000E+01	.0000E+00	.0000E+00	/	.0000E+00	.1000E+01	.0000E+00
276	.1000E+01	.0000E+00	.0000E+00	/	.0000E+00	.1000E+01	.0000E+00
277	.1000E+01	.0000E+00	.0000E+00	/	.0000E+00	.1000E+01	.0000E+00
278	.1000E+01	.0000E+00	.0000E+00	/	.0000E+00	.1000E+01	.0000E+00
279	.1000E+01	.0000E+00	.0000E+00	/	.0000E+00	.1000E+01	.0000E+00
282	.1000E+01	.0000E+00	.0000E+00	/	.0000E+00	.1000E+01	.0000E+00
283	.1000E+01	.0000E+00	.0000E+00	/	.0000E+00	.1000E+01	.0000E+00
284	.1000E+01	.0000E+00	.0000E+00	/	.0000E+00	.1000E+01	.0000E+00
285	.1000E+01	.0000E+00	.0000E+00	/	.0000E+00	.1000E+01	.0000E+00
286	.1000E+01	.0000E+00	.0000E+00	/	.0000E+00	.1000E+01	.0000E+00
287	.1000E+01	.0000E+00	.0000E+00	/	.0000E+00	.1000E+01	.0000E+00
288	.1000E+01	.0000E+00	.0000E+00	/	.0000E+00	.1000E+01	.0000E+00
289	.1000E+01	.0000E+00	.0000E+00	/	.0000E+00	.1000E+01	.0000E+00
290	.1000E+01	.0000E+00	.0000E+00	/	.0000E+00	.1000E+01	.0000E+00
291	.1000E+01	.0000E+00	.0000E+00	/	.0000E+00	.1000E+01	.0000E+00
292	.1000E+01	.0000E+00	.0000E+00	/	.0000E+00	.1000E+01	.0000E+00

========== I M A G E S 3 D ==========
= Copyright (c) 1984 Celestial Software Inc. =
==========

ASSEMBLE STIFFNESS MATRIX Version 2.0 07/01/90

Node	Local T1 axis X	Y	Z	Local T2 axis X	Y	Z
293	.1000E+01	.0000E+00	.0000E+00	.0000E+00	.1000E+01	.0000E+00
294	.1000E+01	.0000E+00	.0000E+00	.0000E+00	.1000E+01	.0000E+00
295	.1000E+01	.0000E+00	.0000E+00	.0000E+00	.1000E+01	.0000E+00
296	.1000E+01	.0000E+00	.0000E+00	.0000E+00	.1000E+01	.0000E+00
297	.1000E+01	.0000E+00	.0000E+00	.0000E+00	.1000E+01	.0000E+00
298	.1000E+01	.0000E+00	.0000E+00	.0000E+00	.1000E+01	.0000E+00
299	.1000E+01	.0000E+00	.0000E+00	.0000E+00	.1000E+01	.0000E+00

========== I M A G E S 3 D ==========
= Copyright (c) 1984 Celestial Software Inc. =
==========

ASSEMBLE STIFFNESS MATRIX Version 2.0 07/01/90

STIFFNESS ASSEMBLY SUMMARY

Number of Node Points	300
Number of Truss and Beam Elements	0
Number of Plate Elements	266
Number of Spring Elements	0
Number of Solid Elements	0
Number of Axisymmetric Elements	0
Number of Nodes with Restraints	48
Number of Equations to be Solved	1260
Number of Blocks in the Matrix	6

B L O C K I N F O R M A T I O N

BLCK NO	SIZE (Byte)	BLCK NO	SIZE (Byte)	BLCK NO	SIZE (Byte)	BLCK NO	SIZE (Byte)
1	143880	2	143528	3	143792	4	143688
5	143640	6	45912				

========== I M A G E S 3 D ==========
= Copyright (c) 1984 Celestial Software Inc. =
==========

ASSEMBLE STIFFNESS MATRIX Version 2.0 07/01/90

E Q U A T I O N N U M B E R L I S T

NODE WAS	NODE IS	TRANSLATION X	TRANSLATION Y	TRANSLATION Z	ROTATION X	ROTATION Y	ROTATION Z
1	1	0	0	0	0	0	0
2	16	0	0	0	0	0	0
3	31	0	0	0	0	0	0
4	46	0	0	0	0	0	0
5	61	0	0	0	0	0	0
6	76	0	0	0	0	0	0
7	91	0	0	0	0	0	0
8	106	0	0	0	0	0	0
9	121	0	0	0	0	0	0
10	136	0	0	0	0	0	0
11	151	0	0	0	0	0	0
12	175	0	0	0	0	0	0
13	197	0	0	0	0	0	0
14	217	0	0	0	0	0	0
15	235	0	0	0	0	0	0
16	251	0	0	0	0	0	0
17	265	0	0	0	0	0	0
18	277	0	0	0	0	0	0
19	287	0	0	0	0	0	0
20	295	0	0	0	0	0	0
21	2	0	0	0	0	0	0
22	17	1	2	3	4	5	0
23	32	71	72	73	74	75	0
24	47	141	142	143	144	145	0
25	62	211	212	213	214	215	0
26	77	281	282	283	284	285	0
27	92	351	352	353	354	355	0
28	107	421	422	423	424	425	0
29	122	491	492	493	494	495	0
30	137	561	562	563	564	565	0
31	152	631	632	633	634	635	0
32	176	741	742	743	744	745	0
33	198	841	842	843	844	845	0
34	218	931	932	933	934	935	0
35	236	1011	1012	1013	1014	1015	0
36	252	1081	1082	1083	1084	1085	0
37	266	1141	1142	1143	1144	1145	0
38	278	1191	1192	1193	1194	1195	0
39	288	1231	1232	1233	1234	1235	0
40	296	0	0	0	0	0	0

========== I M A G E S 3 D ==========
= Copyright (c) 1984 Celestial Software Inc. =
==========

ASSEMBLE STIFFNESS MATRIX Version 2.0 07/01/90

NODE WAS	NODE IS	TRANSLATION X	TRANSLATION Y	TRANSLATION Z	ROTATION X	ROTATION Y	ROTATION Z
41	3	0	0	0	0	0	0
42	18	6	7	8	9	10	0
43	33	76	77	78	79	80	0
44	48	146	147	148	149	150	0
45	63	216	217	218	219	220	0
46	78	286	287	288	289	290	0
47	93	356	357	358	359	360	0
48	108	426	427	428	429	430	0
49	123	496	497	498	499	500	0
50	138	566	567	568	569	570	0
51	153	636	637	638	639	640	0
52	177	746	747	748	749	750	0
53	199	846	847	848	849	850	0
54	219	936	937	938	939	940	0
55	237	1016	1017	1018	1019	1020	0
56	253	1086	1087	1088	1089	1090	0
57	267	1146	1147	1148	1149	1150	0
58	279	1196	1197	1198	1199	1200	0
59	289	1236	1237	1238	1239	1240	0
60	297	0	0	0	0	0	0
61	4	0	0	0	0	0	0
62	19	11	12	13	14	15	0
63	34	81	82	83	84	85	0
64	49	151	152	153	154	155	0
65	64	221	222	223	224	225	0
66	79	291	292	293	294	295	0
67	94	361	362	363	364	365	0
68	109	431	432	433	434	435	0
69	124	501	502	503	504	505	0
70	139	571	572	573	574	575	0
71	154	641	642	643	644	645	0
72	178	751	752	753	754	755	0
73	200	851	852	853	854	855	0
74	220	941	942	943	944	945	0
75	238	1021	1022	1023	1024	1025	0
76	254	1091	1092	1093	1094	1095	0
77	268	1151	1152	1153	1154	1155	0
78	280	1201	1202	1203	1204	1205	0
79	290	1241	1242	1243	1244	1245	0
80	298	0	0	0	0	0	0

I M A G E S 3 D
= Copyright (c) 1984 Celestial Software Inc. =

ASSEMBLE STIFFNESS MATRIX Version 2.0 07/01/90

NODE		TRANSLATION			ROTATION		
WAS	IS	X	Y	Z	X	Y	Z
81	5	0	0	0	0	0	0
82	20	16	17	18	19	20	0
83	35	86	87	88	89	90	0
84	50	156	157	158	159	160	0
85	65	226	227	228	229	230	0
86	80	296	297	298	299	300	0
87	95	366	367	368	369	370	0
88	110	436	437	438	439	440	0
89	125	506	507	508	509	510	0
90	140	576	577	578	579	580	0
91	155	646	647	648	649	650	0
92	179	756	757	758	759	760	0
93	201	856	857	858	859	860	0
94	221	946	947	948	949	950	0
95	239	1026	1027	1028	1029	1030	0
96	255	1096	1097	1098	1099	1100	0
97	269	1156	1157	1158	1159	1160	0
98	281	1206	1207	1208	1209	1210	0
99	291	1246	1247	1248	1249	1250	0
100	299	0	0	0	0	0	0
101	6	0	0	0	0	0	0
102	21	21	22	23	24	25	0
103	36	91	92	93	94	95	0
104	51	161	162	163	164	165	0
105	66	231	232	233	234	235	0
106	81	301	302	303	304	305	0
107	96	371	372	373	374	375	0
108	111	441	442	443	444	445	0
109	126	511	512	513	514	515	0
110	141	581	582	583	584	585	0
111	156	651	652	653	654	655	0
112	180	761	762	763	764	765	0
113	202	861	862	863	864	865	0
114	222	951	952	953	954	955	0
115	240	1031	1032	1033	1034	1035	0
116	256	1101	1102	1103	1104	1105	0
117	270	1161	1162	1163	1164	1165	0
118	282	1211	1212	1213	1214	1215	0
119	292	1251	1252	1253	1254	1255	0
120	300	0	0	0	0	0	0

I M A G E S 3 D
= Copyright (c) 1984 Celestial Software Inc. =

ASSEMBLE STIFFNESS MATRIX Version 2.0 07/01/90

NODE		TRANSLATION			ROTATION		
WAS	IS	X	Y	Z	X	Y	Z
121	7	0	0	0	0	0	0
122	22	26	27	28	29	30	0
123	37	96	97	98	99	100	0
124	52	166	167	168	169	170	0
125	67	236	237	238	239	240	0
126	82	306	307	308	309	310	0
127	97	376	377	378	379	380	0
128	112	446	447	448	449	450	0
129	127	516	517	518	519	520	0
130	142	586	587	588	589	590	0
131	157	656	657	658	659	660	0
132	181	766	767	768	769	770	0
133	203	866	867	868	869	870	0
134	223	956	957	958	959	960	0
135	241	1036	1037	1038	1039	1040	0
136	257	1106	1107	1108	1109	1110	0
137	271	1166	1167	1168	1169	1170	0
138	283	1216	1217	1218	1219	1220	0
139	293	1256	1257	1258	1259	1260	0
140	294	0	0	0	0	0	0
141	8	0	0	0	0	0	0
142	23	31	32	33	34	35	0
143	38	101	102	103	104	105	0
144	53	171	172	173	174	175	0
145	68	241	242	243	244	245	0
146	83	311	312	313	314	315	0
147	98	381	382	383	384	385	0
148	113	451	452	453	454	455	0
149	128	521	522	523	524	525	0
150	143	591	592	593	594	595	0
151	158	661	662	663	664	665	0
152	182	771	772	773	774	775	0
153	204	871	872	873	874	875	0
154	224	961	962	963	964	965	0
155	242	1041	1042	1043	1044	1045	0
156	258	1111	1112	1113	1114	1115	0
157	272	1171	1172	1173	1174	1175	0
158	284	1221	1222	1223	1224	1225	0
159	285	1226	1227	1228	1229	1230	0
160	286	0	0	0	0	0	0

========== I M A G E S 3 D ==========
= Copyright (c) 1984 Celestial Software Inc. =
==========

ASSEMBLE STIFFNESS MATRIX Version 2.0 07/01/90

NODE WAS	NODE IS	TRANSLATION X	TRANSLATION Y	TRANSLATION Z	ROTATION X	ROTATION Y	ROTATION Z
161	9	0	0	0	0	0	0
162	24	36	37	38	39	40	0
163	39	106	107	108	109	110	0
164	54	176	177	178	179	180	0
165	69	246	247	248	249	250	0
166	84	316	317	318	319	320	0
167	99	386	387	388	389	390	0
168	114	456	457	458	459	460	0
169	129	526	527	528	529	530	0
170	144	596	597	598	599	600	0
171	159	666	667	668	669	670	0
172	183	776	777	778	779	780	0
173	205	876	877	878	879	880	0
174	225	966	967	968	969	970	0
175	243	1046	1047	1048	1049	1050	0
176	259	1116	1117	1118	1119	1120	0
177	273	1176	1177	1178	1179	1180	0
178	274	1181	1182	1183	1184	1185	0
179	275	1186	1187	1188	1189	1190	0
180	276	0	0	0	0	0	0
181	10	0	0	0	0	0	0
182	25	41	42	43	44	45	0
183	40	111	112	113	114	115	0
184	55	181	182	183	184	185	0
185	70	251	252	253	254	255	0
186	85	321	322	323	324	325	0
187	100	391	392	393	394	395	0
188	115	461	462	463	464	465	0
189	130	531	532	533	534	535	0
190	145	601	602	603	604	605	0
191	160	671	672	673	674	675	0
192	184	781	782	783	784	785	0
193	206	881	882	883	884	885	0
194	226	971	972	973	974	975	0
195	244	1051	1052	1053	1054	1055	0
196	260	1121	1122	1123	1124	1125	0
197	261	1126	1127	1128	1129	1130	0
198	262	1131	1132	1133	1134	1135	0
199	263	1136	1137	1138	1139	1140	0
200	264	0	0	0	0	0	0

========== I M A G E S 3 D ==========
= Copyright (c) 1984 Celestial Software Inc. =
==========

ASSEMBLE STIFFNESS MATRIX Version 2.0 07/01/90

NODE WAS	NODE IS	TRANSLATION X	TRANSLATION Y	TRANSLATION Z	ROTATION X	ROTATION Y	ROTATION Z
201	11	0	0	0	0	0	0
202	26	46	47	48	49	50	0
203	41	116	117	118	119	120	0
204	56	186	187	188	189	190	0
205	71	256	257	258	259	260	0
206	86	326	327	328	329	330	0
207	101	396	397	398	399	400	0
208	116	466	467	468	469	470	0
209	131	536	537	538	539	540	0
210	146	606	607	608	609	610	0
211	161	676	677	678	679	680	0
212	185	786	787	788	789	790	0
213	207	886	887	888	889	890	0
214	227	976	977	978	979	980	0
215	245	1056	1057	1058	1059	1060	0
216	246	1061	1062	1063	1064	1065	0
217	247	1066	1067	1068	1069	1070	0
218	248	1071	1072	1073	1074	1075	0
219	249	1076	1077	1078	1079	1080	0
220	250	0	0	0	0	0	0
221	12	0	0	0	0	0	0
222	27	51	52	53	54	55	0
223	42	121	122	123	124	125	0
224	57	191	192	193	194	195	0
225	72	261	262	263	264	265	0
226	87	331	332	333	334	335	0
227	102	401	402	403	404	405	0
228	117	471	472	473	474	475	0
229	132	541	542	543	544	545	0
230	147	611	612	613	614	615	0
231	162	681	682	683	684	685	0
232	186	791	792	793	794	795	0
233	208	891	892	893	894	895	0
234	228	981	982	983	984	985	0
235	229	986	987	988	989	990	0
236	230	991	992	993	994	995	0
237	231	996	997	998	999	1000	0
238	232	1001	1002	1003	1004	1005	0
239	233	1006	1007	1008	1009	1010	0
240	234	0	0	0	0	0	0

I M A G E S 3 D

= Copyright (c) 1984 Celestial Software Inc. =

ASSEMBLE STIFFNESS MATRIX Version 2.0 07/01/90

NODE		TRANSLATION			ROTATION		
WAS	IS	X	Y	Z	X	Y	Z
241	13	0	0	0	0	0	0
242	28	56	57	58	59	60	0
243	43	126	127	128	129	130	0
244	58	196	197	198	199	200	0
245	73	266	267	268	269	270	0
246	88	336	337	338	339	340	0
247	103	406	407	408	409	410	0
248	118	476	477	478	479	480	0
249	133	546	547	548	549	550	0
250	148	616	617	618	619	620	0
251	163	686	687	688	689	690	0
252	187	796	797	798	799	800	0
253	209	896	897	898	899	900	0
254	210	901	902	903	904	905	0
255	211	906	907	908	909	910	0
256	212	911	912	913	914	915	0
257	213	916	917	918	919	920	0
258	214	921	922	923	924	925	0
259	215	926	927	928	929	930	0
260	216	0	0	0	0	0	0
261	14	0	0	0	0	0	0
262	29	61	62	63	64	65	0
263	44	131	132	133	134	135	0
264	59	201	202	203	204	205	0
265	74	271	272	273	274	275	0
266	89	341	342	343	344	345	0
267	104	411	412	413	414	415	0
268	119	481	482	483	484	485	0
269	134	551	552	553	554	555	0
270	149	621	622	623	624	625	0
271	164	691	692	693	694	695	0
272	188	801	802	803	804	805	0
273	189	806	807	808	809	810	0
274	190	811	812	813	814	815	0
275	191	816	817	818	819	820	0
276	192	821	822	823	824	825	0
277	193	826	827	828	829	830	0
278	194	831	832	833	834	835	0
279	195	836	837	838	839	840	0
280	196	0	0	0	0	0	0

I M A G E S 3 D

= Copyright (c) 1984 Celestial Software Inc. =

ASSEMBLE STIFFNESS MATRIX Version 2.0 07/01/90

NODE		TRANSLATION			ROTATION		
WAS	IS	X	Y	Z	X	Y	Z
281	15	0	0	0	0	0	0
282	30	66	67	68	69	70	0
283	45	136	137	138	139	140	0
284	60	206	207	208	209	210	0
285	75	276	277	278	279	280	0
286	90	346	347	348	349	350	0
287	105	416	417	418	419	420	0
288	120	486	487	488	489	490	0
289	135	556	557	558	559	560	0
290	150	626	627	628	629	630	0
291	165	696	697	698	699	700	0
292	166	701	702	703	704	705	0
293	167	706	707	708	709	710	0
294	168	711	712	713	714	715	0
295	169	716	717	718	719	720	0
296	170	721	722	723	724	725	0
297	171	726	727	728	729	730	0
298	172	731	732	733	734	735	0
299	173	736	737	738	739	740	0
300	174	0	0	0	0	0	0

STIFFNESS SUMMARY IN 6 BLOCKS

Minimum Diagonal Stiffness.....	.2940D+07
Eq No of Minimum Diagonal.....	733
Maximum Diagonal Stiffness.....	.6224D+09
Eq No of Maximum Diagonal.....	119

I M A G E S 3 D

= Copyright (c) 1984 Celestial Software Inc. =

SOLVE FREQUENCIES Version 2.0 07/01/90

Number of frequencies requested 6
Number of frequencies printed 6
Acceleration of gravity 386.40

Mode	Eigenvalue	Frequency	Period	Error
1	.465736E+05	.343471E+02	.291145E-01	.000000E+00
2	.232558E+06	.767513E+02	.130291E-01	.302229E-14
3	.287181E+06	.852900E+02	.117247E-01	.611859E-15
4	.618354E+06	.125152E+03	.799026E-02	.852493E-15
5	.694709E+06	.132654E+03	.753839E-02	.126466E-15
6	.723991E+06	.135421E+03	.738437E-02	.984010E-06

I M A G E S 3 D

= Copyright (c) 1984 Celestial Software Inc. =

SOLVE PARTICIPATION Version 2.0 07/01/90

Mode	Generalized Weight	PARTICIPATION FACTORS X	Y	Z
1	.2171E+04	.2910E-24	-.4918E-26	.2150E+01
2	.2022E+04	.1363E-16	.7231E-15	-.2951E-01
3	.2153E+04	.1929E-16	.1023E-14	-.1146E+01
4	.2033E+04	-.2526E-16	-.1338E-14	.8661E-01
5	.1653E+04	-.3177E-16	-.1656E-14	.1099E+01
6	.5091E+04	.3097E-01	.1642E+01	.7534E-11

Mode	EFFECTIVE MODAL WEIGHTS X	Y	Z	% TOTAL SYSTEM WEIGHTS X	Y	Z
1	.1839E-45	.5251E-49	.1004E+05	.00	.00	49.28
2	.3758E-30	.1057E-26	.1761E+01	.00	.00	.01
3	.8011E-30	.2254E-26	.2830E+04	.00	.00	13.90
4	.1298E-29	.3642E-26	.1525E+02	.00	.00	.07
5	.1668E-29	.4535E-26	.1998E+04	.00	.00	9.81
6	.4881E+01	.1373E+05	.2889E-18	.02	67.43	.00
			Summation:	.02	67.43	73.07

Attachment 2.

Static analysis of the East Pump Pit wall run ID=BO65974

Date: 08-29-1995; Time: 10:14:39

IMAGES 3D
= Copyright (c) 1984 Celestial Software Inc. =

CHECK GEOMETRY Version 2.0 07/01/90

MATERIAL PROPERTIES

Material No	Modulus of Elasticity	Weight Density	Coeff of Thermal Exp.	Poisson's Ratio	Shear Web Modulus
1	4.74470E+05	8.68000E-02	5.50000E-06	1.50E-01	0.00000E+00
2	6.06660E+05	8.68000E-02	5.50000E-06	1.50E-01	0.00000E+00

NODE COORDINATES

Node	X-Coord.	Y-Coord.	Z-Coord.
1	7.00000E+00	0.00000E+00	0.00000E+00
2	1.60000E+01	0.00000E+00	0.00000E+00
3	2.50000E+01	0.00000E+00	0.00000E+00
4	3.40000E+01	0.00000E+00	0.00000E+00
5	4.30000E+01	0.00000E+00	0.00000E+00
6	5.20000E+01	0.00000E+00	0.00000E+00
7	6.10000E+01	0.00000E+00	0.00000E+00
8	7.00000E+01	0.00000E+00	0.00000E+00
9	7.80000E+01	0.00000E+00	0.00000E+00
10	8.40000E+01	0.00000E+00	0.00000E+00
11	8.95000E+01	0.00000E+00	0.00000E+00
12	9.90000E+01	0.00000E+00	0.00000E+00
13	1.08000E+02	0.00000E+00	0.00000E+00
14	1.17000E+02	0.00000E+00	0.00000E+00
15	1.24000E+02	0.00000E+00	0.00000E+00
16	1.30000E+02	0.00000E+00	0.00000E+00
17	1.36000E+02	0.00000E+00	0.00000E+00
18	1.44000E+02	0.00000E+00	0.00000E+00
19	1.50500E+02	0.00000E+00	0.00000E+00
20	1.57000E+02	0.00000E+00	0.00000E+00
21	7.00000E+00	8.00000E+00	0.00000E+00
22	1.60000E+01	8.00000E+00	0.00000E+00
23	2.50000E+01	8.00000E+00	0.00000E+00
24	3.40000E+01	8.00000E+00	0.00000E+00
25	4.30000E+01	8.00000E+00	0.00000E+00
26	5.20000E+01	8.00000E+00	0.00000E+00
27	6.10000E+01	8.00000E+00	0.00000E+00
28	7.00000E+01	8.00000E+00	0.00000E+00
29	7.80000E+01	8.00000E+00	0.00000E+00

IMAGES 3D
= Copyright (c) 1984 Celestial Software Inc. =

CHECK GEOMETRY Version 2.0 07/01/90

Node	X-Coord.	Y-Coord.	Z-Coord.
30	8.40000E+01	8.00000E+00	0.00000E+00
31	8.95000E+01	8.00000E+00	0.00000E+00
32	9.90000E+01	8.00000E+00	0.00000E+00
33	1.08000E+02	8.00000E+00	0.00000E+00
34	1.17000E+02	8.00000E+00	0.00000E+00
35	1.24000E+02	8.00000E+00	0.00000E+00
36	1.30000E+02	8.00000E+00	0.00000E+00
37	1.36000E+02	8.00000E+00	0.00000E+00
38	1.44000E+02	8.00000E+00	0.00000E+00
39	1.50500E+02	8.00000E+00	0.00000E+00
40	1.57000E+02	8.00000E+00	0.00000E+00
41	7.00000E+00	1.60000E+01	0.00000E+00
42	1.60000E+01	1.60000E+01	0.00000E+00
43	2.50000E+01	1.60000E+01	0.00000E+00
44	3.40000E+01	1.60000E+01	0.00000E+00
45	4.30000E+01	1.60000E+01	0.00000E+00
46	5.20000E+01	1.60000E+01	0.00000E+00
47	6.10000E+01	1.60000E+01	0.00000E+00
48	7.00000E+01	1.60000E+01	0.00000E+00
49	7.80000E+01	1.60000E+01	0.00000E+00
50	8.40000E+01	1.60000E+01	0.00000E+00
51	8.95000E+01	1.60000E+01	0.00000E+00
52	9.90000E+01	1.60000E+01	0.00000E+00
53	1.08000E+02	1.60000E+01	0.00000E+00
54	1.17000E+02	1.60000E+01	0.00000E+00
55	1.24000E+02	1.60000E+01	0.00000E+00
56	1.30000E+02	1.60000E+01	0.00000E+00
57	1.36000E+02	1.60000E+01	0.00000E+00
58	1.44000E+02	1.60000E+01	0.00000E+00
59	1.50500E+02	1.60000E+01	0.00000E+00
60	1.57000E+02	1.60000E+01	0.00000E+00
61	7.00000E+00	2.40000E+01	0.00000E+00
62	1.60000E+01	2.40000E+01	0.00000E+00
63	2.50000E+01	2.40000E+01	0.00000E+00
64	3.40000E+01	2.40000E+01	0.00000E+00
65	4.30000E+01	2.40000E+01	0.00000E+00
66	5.20000E+01	2.40000E+01	0.00000E+00
67	6.10000E+01	2.40000E+01	0.00000E+00
68	7.00000E+01	2.40000E+01	0.00000E+00
69	7.80000E+01	2.40000E+01	0.00000E+00
70	8.40000E+01	2.40000E+01	0.00000E+00
71	8.95000E+01	2.40000E+01	0.00000E+00

IMAGES 3D

= Copyright (c) 1984 Celestial Software Inc. =

CHECK GEOMETRY Version 2.0 07/01/90

Node	X-Coord.	Y-Coord.	Z-Coord.
72	9.90000E+01	2.40000E+01	0.00000E+00
73	1.08000E+02	2.40000E+01	0.00000E+00
74	1.17000E+02	2.40000E+01	0.00000E+00
75	1.24000E+02	2.40000E+01	0.00000E+00
76	1.30000E+02	2.40000E+01	0.00000E+00
77	1.36000E+02	2.40000E+01	0.00000E+00
78	1.44000E+02	2.40000E+01	0.00000E+00
79	1.50500E+02	2.40000E+01	0.00000E+00
80	1.57000E+02	2.40000E+01	0.00000E+00
81	7.00000E+00	3.20000E+01	0.00000E+00
82	1.60000E+01	3.20000E+01	0.00000E+00
83	2.50000E+01	3.20000E+01	0.00000E+00
84	3.40000E+01	3.20000E+01	0.00000E+00
85	4.30000E+01	3.20000E+01	0.00000E+00
86	5.20000E+01	3.20000E+01	0.00000E+00
87	6.10000E+01	3.20000E+01	0.00000E+00
88	7.00000E+01	3.20000E+01	0.00000E+00
89	7.80000E+01	3.20000E+01	0.00000E+00
90	8.40000E+01	3.20000E+01	0.00000E+00
91	8.95000E+01	3.20000E+01	0.00000E+00
92	9.90000E+01	3.20000E+01	0.00000E+00
93	1.08000E+02	3.20000E+01	0.00000E+00
94	1.17000E+02	3.20000E+01	0.00000E+00
95	1.24000E+02	3.20000E+01	0.00000E+00
96	1.30000E+02	3.20000E+01	0.00000E+00
97	1.36000E+02	3.20000E+01	0.00000E+00
98	1.44000E+02	3.20000E+01	0.00000E+00
99	1.50500E+02	3.20000E+01	0.00000E+00
100	1.57000E+02	3.20000E+01	0.00000E+00
101	7.00000E+00	3.80000E+01	0.00000E+00
102	1.60000E+01	3.80000E+01	0.00000E+00
103	2.50000E+01	3.80000E+01	0.00000E+00
104	3.40000E+01	3.80000E+01	0.00000E+00
105	4.30000E+01	3.80000E+01	0.00000E+00
106	5.20000E+01	3.80000E+01	0.00000E+00
107	6.10000E+01	3.80000E+01	0.00000E+00
108	7.00000E+01	3.80000E+01	0.00000E+00
109	7.80000E+01	3.80000E+01	0.00000E+00
110	8.40000E+01	3.80000E+01	0.00000E+00
111	8.95000E+01	3.80000E+01	0.00000E+00
112	9.90000E+01	3.80000E+01	0.00000E+00
113	1.08000E+02	3.80000E+01	0.00000E+00

IMAGES 3D

= Copyright (c) 1984 Celestial Software Inc. =

CHECK GEOMETRY Version 2.0 07/01/90

Node	X-Coord.	Y-Coord.	Z-Coord.
114	1.17000E+02	3.80000E+01	0.00000E+00
115	1.24000E+02	3.80000E+01	0.00000E+00
116	1.30000E+02	3.80000E+01	0.00000E+00
117	1.36000E+02	3.80000E+01	0.00000E+00
118	1.44000E+02	3.80000E+01	0.00000E+00
119	1.50500E+02	3.80000E+01	0.00000E+00
120	1.57000E+02	3.80000E+01	0.00000E+00
121	7.00000E+00	4.30000E+01	0.00000E+00
122	1.60000E+01	4.30000E+01	0.00000E+00
123	2.50000E+01	4.30000E+01	0.00000E+00
124	3.40000E+01	4.30000E+01	0.00000E+00
125	4.30000E+01	4.30000E+01	0.00000E+00
126	5.20000E+01	4.30000E+01	0.00000E+00
127	6.10000E+01	4.30000E+01	0.00000E+00
128	7.00000E+01	4.30000E+01	0.00000E+00
129	7.80000E+01	4.30000E+01	0.00000E+00
130	8.40000E+01	4.30000E+01	0.00000E+00
131	8.95000E+01	4.30000E+01	0.00000E+00
132	9.90000E+01	4.30000E+01	0.00000E+00
133	1.08000E+02	4.30000E+01	0.00000E+00
134	1.17000E+02	4.30000E+01	0.00000E+00
135	1.24000E+02	4.30000E+01	0.00000E+00
136	1.30000E+02	4.30000E+01	0.00000E+00
137	1.36000E+02	4.30000E+01	0.00000E+00
138	1.44000E+02	4.30000E+01	0.00000E+00
139	1.50500E+02	4.30000E+01	0.00000E+00
140	1.57000E+02	4.30000E+01	0.00000E+00
141	7.00000E+00	5.10000E+01	0.00000E+00
142	1.60000E+01	5.10000E+01	0.00000E+00
143	2.50000E+01	5.10000E+01	0.00000E+00
144	3.40000E+01	5.10000E+01	0.00000E+00
145	4.30000E+01	5.10000E+01	0.00000E+00
146	5.20000E+01	5.10000E+01	0.00000E+00
147	6.10000E+01	5.10000E+01	0.00000E+00
148	7.00000E+01	5.10000E+01	0.00000E+00
149	7.80000E+01	5.10000E+01	0.00000E+00
150	8.40000E+01	5.10000E+01	0.00000E+00
151	8.95000E+01	5.10000E+01	0.00000E+00
152	9.90000E+01	5.10000E+01	0.00000E+00
153	1.08000E+02	5.10000E+01	0.00000E+00
154	1.17000E+02	5.10000E+01	0.00000E+00
155	1.24000E+02	5.10000E+01	0.00000E+00

========== I M A G E S 3 D ==========
= Copyright (c) 1984 Celestial Software Inc. =
==========

CHECK GEOMETRY Version 2.0 07/01/90

Node	X-Coord.	Y-Coord.	Z-Coord.
156	1.30000E+02	5.10000E+01	0.00000E+00
157	1.36000E+02	5.10000E+01	0.00000E+00
158	1.44000E+02	5.10000E+01	0.00000E+00
159	1.50500E+02	5.10000E+01	0.00000E+00
160	1.57000E+02	5.10000E+01	0.00000E+00
161	7.00000E+00	5.61250E+01	0.00000E+00
162	1.60000E+01	5.61250E+01	0.00000E+00
163	2.50000E+01	5.61250E+01	0.00000E+00
164	3.40000E+01	5.61250E+01	0.00000E+00
165	4.30000E+01	5.61250E+01	0.00000E+00
166	5.20000E+01	5.61250E+01	0.00000E+00
167	6.10000E+01	5.61250E+01	0.00000E+00
168	7.00000E+01	5.61250E+01	0.00000E+00
169	7.80000E+01	5.61250E+01	0.00000E+00
170	8.40000E+01	5.61250E+01	0.00000E+00
171	8.95000E+01	5.61250E+01	0.00000E+00
172	9.90000E+01	5.61250E+01	0.00000E+00
173	1.08000E+02	5.61250E+01	0.00000E+00
174	1.17000E+02	5.61250E+01	0.00000E+00
175	1.24000E+02	5.61250E+01	0.00000E+00
176	1.30000E+02	5.61250E+01	0.00000E+00
177	1.36000E+02	5.61250E+01	0.00000E+00
178	1.44000E+02	5.61250E+01	0.00000E+00
179	1.50500E+02	6.00000E+01	0.00000E+00
180	1.57000E+02	6.00000E+01	0.00000E+00
181	7.00000E+00	6.40000E+01	0.00000E+00
182	1.60000E+01	6.40000E+01	0.00000E+00
183	2.50000E+01	6.40000E+01	0.00000E+00
184	3.40000E+01	6.40000E+01	0.00000E+00
185	4.30000E+01	6.40000E+01	0.00000E+00
186	5.20000E+01	6.40000E+01	0.00000E+00
187	6.10000E+01	6.40000E+01	0.00000E+00
188	7.00000E+01	6.40000E+01	0.00000E+00
189	7.80000E+01	6.40000E+01	0.00000E+00
190	8.40000E+01	6.40000E+01	0.00000E+00
191	8.95000E+01	6.40000E+01	0.00000E+00
192	9.90000E+01	6.40000E+01	0.00000E+00
193	1.08000E+02	6.40000E+01	0.00000E+00
194	1.17000E+02	6.40000E+01	0.00000E+00
195	1.24000E+02	6.40000E+01	0.00000E+00
196	1.30000E+02	6.40000E+01	0.00000E+00
197	1.36000E+02	6.40000E+01	0.00000E+00

========== I M A G E S 3 D ==========
= Copyright (c) 1984 Celestial Software Inc. =
==========

CHECK GEOMETRY Version 2.0 07/01/90

Node	X-Coord.	Y-Coord.	Z-Coord.
198	1.44000E+02	6.40000E+01	0.00000E+00
199	1.50500E+02	6.40000E+01	0.00000E+00
200	1.58765E+02	6.40000E+01	0.00000E+00
201	3.61500E+00	7.20000E+01	0.00000E+00
202	1.00000E+01	7.20000E+01	0.00000E+00
203	2.10000E+01	7.20000E+01	0.00000E+00
204	3.20000E+01	7.20000E+01	0.00000E+00
205	4.30000E+01	7.20000E+01	0.00000E+00
206	5.20000E+01	7.20000E+01	0.00000E+00
207	6.10000E+01	7.20000E+01	0.00000E+00
208	7.00000E+01	7.20000E+01	0.00000E+00
209	7.80000E+01	7.20000E+01	0.00000E+00
210	8.40000E+01	7.20000E+01	0.00000E+00
211	8.95000E+01	7.20000E+01	0.00000E+00
212	9.90000E+01	7.20000E+01	0.00000E+00
213	1.08000E+02	7.20000E+01	0.00000E+00
214	1.17000E+02	7.20000E+01	0.00000E+00
215	1.24000E+02	7.20000E+01	0.00000E+00
216	1.30000E+02	7.20000E+01	0.00000E+00
217	1.36000E+02	7.20000E+01	0.00000E+00
218	1.44000E+02	7.20000E+01	0.00000E+00
219	1.53000E+02	7.20000E+01	0.00000E+00
220	1.62294E+02	7.20000E+01	0.00000E+00
221	1.50000E+00	7.70000E+01	0.00000E+00
222	1.00000E+01	7.70000E+01	0.00000E+00
223	2.10000E+01	7.70000E+01	0.00000E+00
224	3.20000E+01	7.70000E+01	0.00000E+00
225	4.30000E+01	7.70000E+01	0.00000E+00
226	5.20000E+01	7.70000E+01	0.00000E+00
227	6.10000E+01	7.70000E+01	0.00000E+00
228	7.00000E+01	7.70000E+01	0.00000E+00
229	7.80000E+01	7.70000E+01	0.00000E+00
230	8.40000E+01	7.70000E+01	0.00000E+00
231	8.95000E+01	7.70000E+01	0.00000E+00
232	9.90000E+01	7.70000E+01	0.00000E+00
233	1.08000E+02	7.70000E+01	0.00000E+00
234	1.17000E+02	7.70000E+01	0.00000E+00
235	1.24000E+02	7.70000E+01	0.00000E+00
236	1.30000E+02	7.70000E+01	0.00000E+00
237	1.36000E+02	7.70000E+01	0.00000E+00
238	1.44000E+02	7.70000E+01	0.00000E+00
239	1.53000E+02	7.70000E+01	0.00000E+00

HNF-2403, Rev.0

I M A G E S 3 D
= Copyright (c) 1984 Celestial Software Inc. =

CHECK GEOMETRY Version 2.0 07/01/90

Node	X-Coord.	Y-Coord.	Z-Coord.
240	1.64500E+02	7.70000E+01	0.00000E+00
241	1.00000E+00	8.50000E+01	0.00000E+00
242	1.00000E+01	8.50000E+01	0.00000E+00
243	2.10000E+01	8.50000E+01	0.00000E+00
244	3.20000E+01	8.50000E+01	0.00000E+00
245	4.30000E+01	8.50000E+01	0.00000E+00
246	5.20000E+01	8.50000E+01	0.00000E+00
247	6.10000E+01	8.50000E+01	0.00000E+00
248	7.00000E+01	8.50000E+01	0.00000E+00
249	7.80000E+01	8.50000E+01	0.00000E+00
250	8.40000E+01	8.50000E+01	0.00000E+00
251	8.95000E+01	8.50000E+01	0.00000E+00
252	9.90000E+01	8.50000E+01	0.00000E+00
253	1.08000E+02	8.50000E+01	0.00000E+00
254	1.17000E+02	8.50000E+01	0.00000E+00
255	1.24000E+02	8.50000E+01	0.00000E+00
256	1.30000E+02	8.50000E+01	0.00000E+00
257	1.36000E+02	8.50000E+01	0.00000E+00
258	1.44000E+02	8.50000E+01	0.00000E+00
259	1.53000E+02	8.50000E+01	0.00000E+00
260	1.64988E+02	8.50000E+01	0.00000E+00
261	5.00000E-01	9.30000E+01	0.00000E+00
262	1.00000E+01	9.30000E+01	0.00000E+00
263	2.10000E+01	9.30000E+01	0.00000E+00
264	3.20000E+01	9.30000E+01	0.00000E+00
265	4.30000E+01	9.30000E+01	0.00000E+00
266	5.20000E+01	9.30000E+01	0.00000E+00
267	6.10000E+01	9.30000E+01	0.00000E+00
268	7.00000E+01	9.30000E+01	0.00000E+00
269	7.80000E+01	9.30000E+01	0.00000E+00
270	8.40000E+01	9.30000E+01	0.00000E+00
271	8.95000E+01	9.30000E+01	0.00000E+00
272	9.90000E+01	9.30000E+01	0.00000E+00
273	1.08000E+02	9.30000E+01	0.00000E+00
274	1.17000E+02	9.30000E+01	0.00000E+00
275	1.24000E+02	9.30000E+01	0.00000E+00
276	1.30000E+02	9.30000E+01	0.00000E+00
277	1.36000E+02	9.30000E+01	0.00000E+00
278	1.44000E+02	9.30000E+01	0.00000E+00
279	1.53000E+02	9.30000E+01	0.00000E+00
280	1.65500E+02	9.30000E+01	0.00000E+00
281	0.00000E+00	1.01000E+02	0.00000E+00

I M A G E S 3 D
= Copyright (c) 1984 Celestial Software Inc. =

CHECK GEOMETRY Version 2.0 07/01/90

Node	X-Coord.	Y-Coord.	Z-Coord.
282	1.00000E+01	1.01000E+02	0.00000E+00
283	2.10000E+01	1.01000E+02	0.00000E+00
284	3.20000E+01	1.01000E+02	0.00000E+00
285	4.30000E+01	1.01000E+02	0.00000E+00
286	5.20000E+01	1.01000E+02	0.00000E+00
287	6.10000E+01	1.01000E+02	0.00000E+00
288	7.00000E+01	1.01000E+02	0.00000E+00
289	7.80000E+01	1.01000E+02	0.00000E+00
290	8.40000E+01	1.01000E+02	0.00000E+00
291	8.95000E+01	1.01000E+02	0.00000E+00
292	9.90000E+01	1.01000E+02	0.00000E+00
293	1.08000E+02	1.01000E+02	0.00000E+00
294	1.17000E+02	1.01000E+02	0.00000E+00
295	1.24000E+02	1.01000E+02	0.00000E+00
296	1.30000E+02	1.01000E+02	0.00000E+00
297	1.36000E+02	1.01000E+02	0.00000E+00
298	1.44000E+02	1.01000E+02	0.00000E+00
299	1.53000E+02	1.01000E+02	0.00000E+00
300	1.66000E+02	1.01000E+02	0.00000E+00

PLATE ELEMENT CONNECTIVITY

Plate No.		Nodes I	J	K	L	Mat No.	Thickness	Area	Shear Web Thickness	Aspect Ratio	Plate Type
QUAD	1	1	2	22	21	1	1.800E+01	7.200E+01		1.125E+00	M+B
QUAD	2	2	3	23	22	1	1.800E+01	7.200E+01		1.125E+00	M+B
QUAD	3	3	4	24	23	1	1.800E+01	7.200E+01		1.125E+00	M+B
QUAD	4	4	5	25	24	1	1.800E+01	7.200E+01		1.125E+00	M+B
QUAD	5	5	6	26	25	1	1.800E+01	7.200E+01		1.125E+00	M+B
QUAD	6	6	7	27	26	1	1.800E+01	7.200E+01		1.125E+00	M+B
QUAD	7	7	8	28	27	1	1.800E+01	7.200E+01		1.125E+00	M+B
QUAD	8	8	9	29	28	1	1.800E+01	6.400E+01		1.000E+00	M+B
QUAD	9	9	10	30	29	1	1.800E+01	4.800E+01		7.500E-01	M+B
QUAD	10	10	11	31	30	1	1.800E+01	4.400E+01		6.875E-01	M+B
QUAD	11	11	12	32	31	1	1.800E+01	7.600E+01		1.188E+00	M+B
QUAD	12	12	13	33	32	1	1.800E+01	7.200E+01		1.125E+00	M+B
QUAD	13	13	14	34	33	1	1.800E+01	7.200E+01		1.125E+00	M+B
QUAD	14	14	15	35	34	1	1.800E+01	5.600E+01		8.750E-01	M+B
QUAD	15	15	16	36	35	1	1.800E+01	4.800E+01		7.500E-01	M+B

= Copyright (c) 1984 Celestial Software Inc. =

IMAGES 3D

CHECK GEOMETRY Version 2.0 07/01/90

	Plate No.	Nodes I	J	K	L	Mat No.	Thickness	Area	Shear Web Thickness	Aspect Ratio	Plate Type
QUAD	16	16	17	37	36	1	1.800E+01	4.800E+01		7.500E-01	M+B
QUAD	17	17	18	38	37	1	1.800E+01	6.400E+01		1.000E+00	M+B
QUAD	18	18	19	39	38	1	1.800E+01	5.200E+01		8.125E-01	M+B
QUAD	19	19	20	40	39	1	1.800E+01	5.200E+01		8.125E-01	M+B
QUAD	20	21	22	42	41	1	1.800E+01	7.200E+01		1.125E+00	M+B
QUAD	21	22	23	43	42	1	1.800E+01	7.200E+01		1.125E+00	M+B
QUAD	22	23	24	44	43	1	1.800E+01	7.200E+01		1.125E+00	M+B
QUAD	23	24	25	45	44	1	1.800E+01	7.200E+01		1.125E+00	M+B
QUAD	24	25	26	46	45	1	1.800E+01	7.200E+01		1.125E+00	M+B
QUAD	25	26	27	47	46	1	1.800E+01	7.200E+01		1.125E+00	M+B
QUAD	26	27	28	48	47	1	1.800E+01	7.200E+01		1.125E+00	M+B
QUAD	27	28	29	49	48	1	1.800E+01	6.400E+01		1.000E+00	M+B
QUAD	28	29	30	50	49	1	1.800E+01	4.800E+01		7.500E-01	M+B
QUAD	29	30	31	51	50	1	1.800E+01	4.400E+01		6.875E-01	M+B
QUAD	30	31	32	52	51	1	1.800E+01	7.600E+01		1.188E+00	M+B
QUAD	31	32	33	53	52	1	1.800E+01	7.200E+01		1.125E+00	M+B
QUAD	32	33	34	54	53	1	1.800E+01	7.200E+01		1.125E+00	M+B
QUAD	33	34	35	55	54	1	1.800E+01	5.600E+01		8.750E-01	M+B
QUAD	34	35	36	56	55	1	1.800E+01	4.800E+01		7.500E-01	M+B
QUAD	35	36	37	57	56	1	1.800E+01	4.800E+01		7.500E-01	M+B
QUAD	36	37	38	58	57	1	1.800E+01	6.400E+01		1.000E+00	M+B
QUAD	37	38	39	59	58	1	1.800E+01	5.200E+01		8.125E-01	M+B
QUAD	38	39	40	60	59	1	1.800E+01	5.200E+01		8.125E-01	M+B
QUAD	39	41	42	62	61	1	1.800E+01	7.200E+01		1.125E+00	M+B
QUAD	40	42	43	63	62	1	1.800E+01	7.200E+01		1.125E+00	M+B
QUAD	41	43	44	64	63	1	1.800E+01	7.200E+01		1.125E+00	M+B
QUAD	42	44	45	65	64	1	1.800E+01	7.200E+01		1.125E+00	M+B
QUAD	43	45	46	66	65	1	1.800E+01	7.200E+01		1.125E+00	M+B
QUAD	44	46	47	67	66	1	1.800E+01	7.200E+01		1.125E+00	M+B
QUAD	45	47	48	68	67	1	1.800E+01	7.200E+01		1.125E+00	M+B
QUAD	46	48	49	69	68	1	1.800E+01	6.400E+01		1.000E+00	M+B
QUAD	47	49	50	70	69	1	1.800E+01	4.800E+01		7.500E-01	M+B
QUAD	48	50	51	71	70	1	1.800E+01	4.400E+01		6.875E-01	M+B
QUAD	49	51	52	72	71	1	1.800E+01	7.600E+01		1.188E+00	M+B
QUAD	50	52	53	73	72	1	1.800E+01	7.200E+01		1.125E+00	M+B
QUAD	51	53	54	74	73	1	1.800E+01	7.200E+01		1.125E+00	M+B
QUAD	52	54	55	75	74	1	1.800E+01	5.600E+01		8.750E-01	M+B
QUAD	53	55	56	76	75	1	1.800E+01	4.800E+01		7.500E-01	M+B
QUAD	54	56	57	77	76	1	1.800E+01	4.800E+01		7.500E-01	M+B
QUAD	55	57	58	78	77	1	1.800E+01	6.400E+01		1.000E+00	M+B
QUAD	56	58	59	79	78	1	1.800E+01	5.200E+01		8.125E-01	M+B

= Copyright (c) 1984 Celestial Software Inc. =

IMAGES 3D

CHECK GEOMETRY Version 2.0 07/01/90

	Plate No.	Nodes I	J	K	L	Mat No.	Thickness	Area	Shear Web Thickness	Aspect Ratio	Plate Type
QUAD	57	59	60	80	79	1	1.800E+01	5.200E+01		8.125E-01	M+B
QUAD	58	61	62	82	81	1	1.800E+01	7.200E+01		1.125E+00	M+B
QUAD	59	62	63	83	82	1	1.800E+01	7.200E+01		1.125E+00	M+B
QUAD	60	63	64	84	83	1	1.800E+01	7.200E+01		1.125E+00	M+B
QUAD	61	64	65	85	84	1	1.800E+01	7.200E+01		1.125E+00	M+B
QUAD	62	65	66	86	85	1	1.800E+01	7.200E+01		1.125E+00	M+B
QUAD	63	66	67	87	86	1	1.800E+01	7.200E+01		1.125E+00	M+B
QUAD	64	67	68	88	87	1	1.800E+01	7.200E+01		1.125E+00	M+B
QUAD	65	68	69	89	88	1	1.800E+01	6.400E+01		1.000E+00	M+B
QUAD	66	69	70	90	89	1	1.800E+01	4.800E+01		7.500E-01	M+B
QUAD	67	70	71	91	90	1	1.800E+01	4.400E+01		6.875E-01	M+B
QUAD	68	71	72	92	91	1	1.800E+01	7.600E+01		1.188E+00	M+B
QUAD	69	72	73	93	92	1	1.800E+01	7.200E+01		1.125E+00	M+B
QUAD	70	73	74	94	93	1	1.800E+01	7.200E+01		1.125E+00	M+B
QUAD	71	74	75	95	94	1	1.800E+01	5.600E+01		8.750E-01	M+B
QUAD	72	75	76	96	95	1	1.800E+01	4.800E+01		7.500E-01	M+B
QUAD	73	76	77	97	96	1	1.800E+01	4.800E+01		7.500E-01	M+B
QUAD	74	77	78	98	97	1	1.800E+01	6.400E+01		1.000E+00	M+B
QUAD	75	78	79	99	98	1	1.800E+01	5.200E+01		8.125E-01	M+B
QUAD	76	79	80	100	99	1	1.800E+01	5.200E+01		8.125E-01	M+B
QUAD	77	81	82	102	101	1	1.800E+01	5.400E+01		1.500E+00	M+B
QUAD	78	82	83	103	102	1	1.800E+01	5.400E+01		1.500E+00	M+B
QUAD	79	83	84	104	103	1	1.800E+01	5.400E+01		1.500E+00	M+B
QUAD	80	84	85	105	104	1	1.800E+01	5.400E+01		1.500E+00	M+B
QUAD	81	85	86	106	105	1	1.800E+01	5.400E+01		1.500E+00	M+B
QUAD	82	86	87	107	106	1	1.800E+01	5.400E+01		1.500E+00	M+B
QUAD	83	87	88	108	107	1	1.800E+01	5.400E+01		1.500E+00	M+B
QUAD	84	88	89	109	108	1	1.800E+01	4.800E+01		1.333E+00	M+B
QUAD	85	89	90	110	109	1	1.800E+01	3.600E+01		1.000E+00	M+B
QUAD	86	90	91	111	110	1	1.800E+01	3.300E+01		9.167E-01	M+B
QUAD	87	91	92	112	111	1	1.800E+01	5.700E+01		1.583E+00	M+B
QUAD	88	92	93	113	112	1	1.800E+01	5.400E+01		1.500E+00	M+B
QUAD	89	93	94	114	113	1	1.800E+01	5.400E+01		1.500E+00	M+B
QUAD	90	94	95	115	114	1	1.800E+01	4.200E+01		1.167E+00	M+B
QUAD	91	95	96	116	115	1	1.800E+01	3.600E+01		1.000E+00	M+B
QUAD	92	96	97	117	116	1	1.800E+01	3.600E+01		1.000E+00	M+B
QUAD	93	97	98	118	117	1	1.800E+01	4.800E+01		1.333E+00	M+B
QUAD	94	98	99	119	118	1	1.800E+01	3.900E+01		1.083E+00	M+B
QUAD	95	99	100	120	119	1	1.800E+01	3.900E+01		1.083E+00	M+B
QUAD	96	101	102	122	121	1	1.800E+01	4.500E+01		1.800E+00	M+B
QUAD	97	102	103	123	122	1	1.800E+01	4.500E+01		1.800E+00	M+B

I M A G E S 3 D

= Copyright (c) 1984 Celestial Software Inc. =

CHECK GEOMETRY Version 2.0 07/01/90

	Plate No.	Nodes I	J	K	L	Mat No.	Thickness	Area	Shear Web Thickness	Aspect Ratio	Plate Type
QUAD	98	103	104	124	123	1	1.800E+01	4.500E+01		1.800E+00	M+B
QUAD	99	104	105	125	124	1	1.800E+01	4.500E+01		1.800E+00	M+B
QUAD	100	105	106	126	125	1	1.800E+01	4.500E+01		1.800E+00	M+B
QUAD	101	106	107	127	126	1	1.800E+01	4.500E+01		1.800E+00	M+B
QUAD	102	107	108	128	127	1	1.800E+01	4.500E+01		1.800E+00	M+B
QUAD	103	108	109	129	128	1	1.800E+01	4.000E+01		1.600E+00	M+B
QUAD	104	109	110	130	129	1	1.800E+01	3.000E+01		1.200E+00	M+B
QUAD	105	110	111	131	130	1	1.800E+01	2.750E+01		1.100E+00	M+B
QUAD	106	111	112	132	131	1	1.800E+01	4.750E+01		1.900E+00	M+B
QUAD	107	112	113	133	132	1	1.800E+01	4.500E+01		1.800E+00	M+B
QUAD	108	113	114	134	133	1	1.800E+01	4.500E+01		1.800E+00	M+B
QUAD	109	114	115	135	134	1	1.800E+01	3.500E+01		1.400E+00	M+B
QUAD	110	115	116	136	135	1	1.800E+01	3.000E+01		1.200E+00	M+B
QUAD	111	116	117	137	136	1	1.800E+01	3.000E+01		1.200E+00	M+B
QUAD	112	117	118	138	137	1	1.800E+01	4.000E+01		1.600E+00	M+B
QUAD	113	118	119	139	138	1	1.800E+01	3.250E+01		1.300E+00	M+B
QUAD	114	119	120	140	139	1	1.800E+01	3.250E+01		1.300E+00	M+B
QUAD	115	121	122	142	141	1	1.800E+01	7.200E+01		1.125E+00	M+B
QUAD	116	122	123	143	142	1	1.800E+01	7.200E+01		1.125E+00	M+B
QUAD	117	123	124	144	143	1	1.800E+01	7.200E+01		1.125E+00	M+B
QUAD	118	124	125	145	144	1	1.800E+01	7.200E+01		1.125E+00	M+B
QUAD	119	125	126	146	145	1	1.800E+01	7.200E+01		1.125E+00	M+B
QUAD	120	126	127	147	146	1	1.800E+01	7.200E+01		1.125E+00	M+B
QUAD	121	127	128	148	147	1	1.800E+01	7.200E+01		1.125E+00	M+B
QUAD	122	128	129	149	148	1	1.800E+01	6.400E+01		1.000E+00	M+B
QUAD	123	129	130	150	149	1	1.800E+01	4.800E+01		7.500E-01	M+B
QUAD	124	130	131	151	150	1	1.800E+01	4.400E+01		6.875E-01	M+B
QUAD	125	131	132	152	151	1	1.800E+01	7.600E+01		1.188E+00	M+B
QUAD	126	132	133	153	152	1	1.800E+01	7.200E+01		1.125E+00	M+B
QUAD	127	133	134	154	153	1	1.800E+01	7.200E+01		1.125E+00	M+B
QUAD	128	134	135	155	154	1	1.800E+01	5.600E+01		8.750E-01	M+B
QUAD	129	135	136	156	155	1	1.800E+01	4.800E+01		7.500E-01	M+B
QUAD	130	136	137	157	156	1	1.800E+01	4.800E+01		7.500E-01	M+B
QUAD	131	137	138	158	157	1	1.800E+01	6.400E+01		1.000E+00	M+B
QUAD	132	138	139	159	158	1	1.800E+01	5.200E+01		8.125E-01	M+B
QUAD	133	139	140	160	159	1	1.800E+01	5.200E+01		8.125E-01	M+B
QUAD	134	141	142	162	161	1	1.800E+01	4.613E+01		1.756E+00	M+B
QUAD	135	142	143	163	162	1	1.800E+01	4.613E+01		1.756E+00	M+B
QUAD	136	143	144	164	163	1	1.800E+01	4.613E+01		1.756E+00	M+B
QUAD	137	144	145	165	164	1	1.800E+01	4.613E+01		1.756E+00	M+B
QUAD	138	145	146	166	165	1	1.800E+01	4.613E+01		1.756E+00	M+B

I M A G E S 3 D

= Copyright (c) 1984 Celestial Software Inc. =

CHECK GEOMETRY Version 2.0 07/01/90

	Plate No.	Nodes I	J	K	L	Mat No.	Thickness	Area	Shear Web Thickness	Aspect Ratio	Plate Type
QUAD	139	146	147	167	166	1	1.800E+01	4.613E+01		1.756E+00	M+B
QUAD	140	147	148	168	167	1	1.800E+01	4.613E+01		1.756E+00	M+B
QUAD	141	148	149	169	168	1	1.800E+01	4.100E+01		1.561E+00	M+B
QUAD	142	149	150	170	169	1	1.800E+01	3.075E+01		1.171E+00	M+B
QUAD	143	150	151	171	170	1	1.800E+01	2.819E+01		1.073E+00	M+B
QUAD	144	151	152	172	171	1	1.800E+01	4.869E+01		1.854E+00	M+B
QUAD	145	152	153	173	172	1	1.800E+01	4.613E+01		1.756E+00	M+B
QUAD	146	153	154	174	173	1	1.800E+01	4.613E+01		1.756E+00	M+B
QUAD	147	154	155	175	174	1	1.800E+01	3.588E+01		1.366E+00	M+B
QUAD	148	155	156	176	175	1	1.800E+01	3.075E+01		1.171E+00	M+B
QUAD	149	156	157	177	176	1	1.800E+01	3.075E+01		1.171E+00	M+B
QUAD	150	157	158	178	177	1	1.800E+01	4.100E+01		1.561E+00	M+B
QUAD	151	158	159	179	178	1	1.800E+01	4.591E+01		9.604E-01	M+B
QUAD	152	159	160	180	179	1	1.800E+01	5.850E+01		7.222E-01	M+B
QUAD	153	161	162	182	181	1	1.800E+01	7.088E+01		1.143E+00	M+B
QUAD	154	162	163	183	182	1	1.800E+01	7.088E+01		1.143E+00	M+B
QUAD	155	163	164	184	183	1	1.800E+01	7.088E+01		1.143E+00	M+B
QUAD	156	164	165	185	184	1	1.800E+01	7.088E+01		1.143E+00	M+B
QUAD	157	165	166	186	185	1	1.800E+01	7.088E+01		1.143E+00	M+B
QUAD	158	166	167	187	186	1	1.800E+01	7.088E+01		1.143E+00	M+B
QUAD	159	167	168	188	187	1	1.800E+01	7.088E+01		1.143E+00	M+B
QUAD	160	168	169	189	188	1	1.800E+01	6.300E+01		1.016E+00	M+B
QUAD	161	169	170	190	189	1	1.800E+01	4.725E+01		7.619E-01	M+B
QUAD	162	170	171	191	190	1	1.800E+01	4.331E+01		6.984E-01	M+B
QUAD	163	171	172	192	191	1	1.800E+01	7.481E+01		1.206E+00	M+B
QUAD	164	172	173	193	192	1	1.800E+01	7.088E+01		1.143E+00	M+B
QUAD	165	173	174	194	193	1	1.800E+01	7.088E+01		1.143E+00	M+B
QUAD	166	174	175	195	194	1	1.800E+01	5.513E+01		8.889E-01	M+B
QUAD	167	175	176	196	195	1	1.800E+01	4.725E+01		7.619E-01	M+B
QUAD	168	176	177	197	196	1	1.800E+01	4.725E+01		7.619E-01	M+B
QUAD	169	177	178	198	197	1	1.800E+01	6.300E+01		1.016E+00	M+B
QUAD	170	178	179	199	198	1	1.800E+01	3.859E+01		1.142E+00	M+B
QUAD	171	179	180	200	199	1	1.800E+01	2.953E+01		1.802E+00	M+B
QUAD	172	181	182	202	201	1	1.800E+01	6.154E+01		8.294E-01	M+B
QUAD	173	182	183	203	202	1	1.800E+01	8.000E+01		1.060E+00	M+B
QUAD	174	183	184	204	203	1	1.800E+01	8.000E+01		1.170E+00	M+B
QUAD	175	184	185	205	204	1	1.800E+01	8.000E+01		1.240E+00	M+B
QUAD	176	185	186	206	205	1	1.800E+01	7.200E+01		1.125E+00	M+B
QUAD	177	186	187	207	206	1	1.800E+01	7.200E+01		1.125E+00	M+B
QUAD	178	187	188	208	207	1	1.800E+01	7.200E+01		1.125E+00	M+B
QUAD	179	188	189	209	208	1	1.800E+01	6.400E+01		1.000E+00	M+B

IMAGES 3D
= Copyright (c) 1984 Celestial Software Inc. =

CHECK GEOMETRY Version 2.0 07/01/90

	Plate No.	Nodes I	J	K	L	Mat No.	Thickness	Area	Shear Web Thickness	Aspect Ratio	Plate Type
QUAD	180	189	190	210	209	1	1.800E+01	4.800E+01		7.500E-01	M+B
QUAD	181	190	191	211	210	1	1.800E+01	4.400E+01		6.875E-01	M+B
QUAD	182	191	192	212	211	1	1.800E+01	7.600E+01		1.188E+00	M+B
QUAD	183	192	193	213	212	1	1.800E+01	7.200E+01		1.125E+00	M+B
QUAD	184	193	194	214	213	1	1.800E+01	7.200E+01		1.125E+00	M+B
QUAD	185	194	195	215	214	1	1.800E+01	5.600E+01		8.750E-01	M+B
QUAD	186	195	196	216	215	1	1.800E+01	4.800E+01		7.500E-01	M+B
QUAD	187	196	197	217	216	1	1.800E+01	4.800E+01		7.500E-01	M+B
QUAD	188	197	198	218	217	1	1.800E+01	6.400E+01		1.000E+00	M+B
QUAD	189	198	199	219	218	1	1.800E+01	6.200E+01		9.571E-01	M+B
QUAD	190	199	200	220	219	1	1.800E+01	7.024E+01		1.027E+00	M+B
QUAD	191	201	202	222	221	1	1.800E+01	3.721E+01		1.456E+00	M+B
QUAD	192	202	203	223	222	1	1.800E+01	5.500E+01		2.200E+00	M+B
QUAD	193	203	204	224	223	1	1.800E+01	5.500E+01		2.200E+00	M+B
QUAD	194	204	205	225	224	1	1.800E+01	5.500E+01		2.200E+00	M+B
QUAD	195	205	206	226	225	1	1.800E+01	4.500E+01		1.800E+00	M+B
QUAD	196	206	207	227	226	1	1.800E+01	4.500E+01		1.800E+00	M+B
QUAD	197	207	208	228	227	1	1.800E+01	4.500E+01		1.800E+00	M+B
QUAD	198	208	209	229	228	1	1.800E+01	4.000E+01		1.600E+00	M+B
QUAD	199	209	210	230	229	1	1.800E+01	3.000E+01		1.200E+00	M+B
QUAD	200	210	211	231	230	1	1.800E+01	2.750E+01		1.100E+00	M+B
QUAD	201	211	212	232	231	1	1.800E+01	4.750E+01		1.900E+00	M+B
QUAD	202	212	213	233	232	1	1.800E+01	4.500E+01		1.800E+00	M+B
QUAD	203	213	214	234	233	1	1.800E+01	4.500E+01		1.800E+00	M+B
QUAD	204	214	215	235	234	1	1.800E+01	3.500E+01		1.400E+00	M+B
QUAD	205	215	216	236	235	1	1.800E+01	3.000E+01		1.200E+00	M+B
QUAD	206	216	217	237	236	1	1.800E+01	3.000E+01		1.200E+00	M+B
QUAD	207	217	218	238	237	1	1.800E+01	4.000E+01		1.600E+00	M+B
QUAD	208	218	219	239	238	1	1.800E+01	4.500E+01		1.800E+00	M+B
QUAD	209	219	220	240	239	1	1.800E+01	5.199E+01		2.031E+00	M+B
QUAD	210	221	222	242	241	2	1.250E+01	7.000E+01		1.093E+00	M+B
QUAD	211	222	223	243	242	2	1.250E+01	8.800E+01		1.375E+00	M+B
QUAD	212	223	224	244	243	2	1.250E+01	8.800E+01		1.375E+00	M+B
QUAD	213	224	225	245	244	2	1.250E+01	8.800E+01		1.375E+00	M+B
QUAD	214	225	226	246	245	2	1.250E+01	7.200E+01		1.125E+00	M+B
QUAD	215	226	227	247	246	2	1.250E+01	7.200E+01		1.125E+00	M+B
QUAD	216	227	228	248	247	2	1.250E+01	7.200E+01		1.125E+00	M+B
QUAD	217	228	229	249	248	2	1.250E+01	6.400E+01		1.000E+00	M+B
QUAD	218	229	230	250	249	2	1.250E+01	4.800E+01		7.500E-01	M+B
QUAD	219	230	231	251	250	2	1.250E+01	4.400E+01		6.875E-01	M+B
QUAD	220	231	232	252	251	2	1.250E+01	7.600E+01		1.188E+00	M+B

IMAGES 3D
= Copyright (c) 1984 Celestial Software Inc. =

CHECK GEOMETRY Version 2.0 07/01/90

	Plate No.	Nodes I	J	K	L	Mat No.	Thickness	Area	Shear Web Thickness	Aspect Ratio	Plate Type
QUAD	221	232	233	253	252	2	1.250E+01	7.200E+01		1.125E+00	M+B
QUAD	222	233	234	254	253	2	1.250E+01	7.200E+01		1.125E+00	M+B
QUAD	223	234	235	255	254	2	1.250E+01	5.600E+01		8.750E-01	M+B
QUAD	224	235	236	256	255	2	1.250E+01	4.800E+01		7.500E-01	M+B
QUAD	225	236	237	257	256	2	1.250E+01	4.800E+01		7.500E-01	M+B
QUAD	226	237	238	258	257	2	1.250E+01	6.400E+01		1.000E+00	M+B
QUAD	227	238	239	259	258	2	1.250E+01	7.200E+01		1.125E+00	M+B
QUAD	228	239	240	260	259	2	1.250E+01	9.395E+01		1.467E+00	M+B
QUAD	229	241	242	262	261	2	1.250E+01	7.400E+01		1.156E+00	M+B
QUAD	230	242	243	263	262	2	1.250E+01	8.800E+01		1.375E+00	M+B
QUAD	231	243	244	264	263	2	1.250E+01	8.800E+01		1.375E+00	M+B
QUAD	232	244	245	265	264	2	1.250E+01	8.800E+01		1.375E+00	M+B
QUAD	233	245	246	266	265	2	1.250E+01	7.200E+01		1.125E+00	M+B
QUAD	234	246	247	267	266	2	1.250E+01	7.200E+01		1.125E+00	M+B
QUAD	235	247	248	268	267	2	1.250E+01	7.200E+01		1.125E+00	M+B
QUAD	236	248	249	269	268	2	1.250E+01	6.400E+01		1.000E+00	M+B
QUAD	237	249	250	270	269	2	1.250E+01	4.800E+01		7.500E-01	M+B
QUAD	238	250	251	271	270	2	1.250E+01	4.400E+01		6.875E-01	M+B
QUAD	239	251	252	272	271	2	1.250E+01	7.600E+01		1.188E+00	M+B
QUAD	240	252	253	273	272	2	1.250E+01	7.200E+01		1.125E+00	M+B
QUAD	241	253	254	274	273	2	1.250E+01	7.200E+01		1.125E+00	M+B
QUAD	242	254	255	275	274	2	1.250E+01	5.600E+01		8.750E-01	M+B
QUAD	243	255	256	276	275	2	1.250E+01	4.800E+01		7.500E-01	M+B
QUAD	244	256	257	277	276	2	1.250E+01	4.800E+01		7.500E-01	M+B
QUAD	245	257	258	278	277	2	1.250E+01	6.400E+01		1.000E+00	M+B
QUAD	246	258	259	279	278	2	1.250E+01	7.200E+01		1.125E+00	M+B
QUAD	247	259	260	280	279	2	1.250E+01	9.795E+01		1.530E+00	M+B
QUAD	248	261	262	282	281	2	1.250E+01	7.800E+01		1.218E+00	M+B
QUAD	249	262	263	283	282	2	1.250E+01	8.800E+01		1.375E+00	M+B
QUAD	250	263	264	284	283	2	1.250E+01	8.800E+01		1.375E+00	M+B
QUAD	251	264	265	285	284	2	1.250E+01	8.800E+01		1.375E+00	M+B
QUAD	252	265	266	286	285	2	1.250E+01	7.200E+01		1.125E+00	M+B
QUAD	253	266	267	287	286	2	1.250E+01	7.200E+01		1.125E+00	M+B
QUAD	254	267	268	288	287	2	1.250E+01	7.200E+01		1.125E+00	M+B
QUAD	255	268	269	289	288	2	1.250E+01	6.400E+01		1.000E+00	M+B
QUAD	256	269	270	290	289	2	1.250E+01	4.800E+01		7.500E-01	M+B
QUAD	257	270	271	291	290	2	1.250E+01	4.400E+01		6.875E-01	M+B
QUAD	258	271	272	292	291	2	1.250E+01	7.600E+01		1.188E+00	M+B
QUAD	259	272	273	293	292	2	1.250E+01	7.200E+01		1.125E+00	M+B
QUAD	260	273	274	294	293	2	1.250E+01	7.200E+01		1.125E+00	M+B
QUAD	261	274	275	295	294	2	1.250E+01	5.600E+01		8.750E-01	M+B

CHECK GEOMETRY Version 2.0 07/01/90

Plate No.		Nodes I	J	K	L	Mat No.	Thickness	Area	Shear Web Thickness	Aspect Ratio	Plate Type
QUAD	262	275	276	296	295	2	1.250E+01	4.800E+01		7.500E-01	M+B
QUAD	263	276	277	297	296	2	1.250E+01	4.800E+01		7.500E-01	M+B
QUAD	264	277	278	298	297	2	1.250E+01	6.400E+01		1.000E+00	M+B
QUAD	265	278	279	299	298	2	1.250E+01	7.200E+01		1.125E+00	M+B
QUAD	266	279	280	300	299	2	1.250E+01	1.020E+02		1.593E+00	M+B

RESTRAINTS

Node No	Global/Local	Restraint Directions
1	GLOBAL	X Y Z RX RY RZ
2	GLOBAL	X Y Z RX RY RZ
3	GLOBAL	X Y Z RX RY RZ
4	GLOBAL	X Y Z RX RY RZ
5	GLOBAL	X Y Z RX RY RZ
6	GLOBAL	X Y Z RX RY RZ
7	GLOBAL	X Y Z RX RY RZ
8	GLOBAL	X Y Z RX RY RZ
9	GLOBAL	X Y Z RX RY RZ
10	GLOBAL	X Y Z RX RY RZ
11	GLOBAL	X Y Z RX RY RZ
12	GLOBAL	X Y Z RX RY RZ
13	GLOBAL	X Y Z RX RY RZ
14	GLOBAL	X Y Z RX RY RZ
15	GLOBAL	X Y Z RX RY RZ
16	GLOBAL	X Y Z RX RY RZ
17	GLOBAL	X Y Z RX RY RZ
18	GLOBAL	X Y Z RX RY RZ
19	GLOBAL	X Y Z RX RY RZ
20	GLOBAL	X Y Z RX RY RZ
21	GLOBAL	X Y Z RX RY RZ
40	GLOBAL	X Y Z RX RY RZ
41	GLOBAL	X Y Z RX RY RZ
60	GLOBAL	X Y Z RX RY RZ
61	GLOBAL	X Y Z RX RY RZ
80	GLOBAL	X Y Z RX RY RZ
81	GLOBAL	X Y Z RX RY RZ
100	GLOBAL	X Y Z RX RY RZ
101	GLOBAL	X Y Z RX RY RZ

CHECK GEOMETRY Version 2.0 07/01/90

Node No	Global/Local	Restraint Directions
120	GLOBAL	X Y Z RX RY RZ
121	GLOBAL	X Y Z RX RY RZ
140	GLOBAL	X Y Z RX RY RZ
141	GLOBAL	X Y Z RX RY RZ
160	GLOBAL	X Y Z RX RY RZ
161	GLOBAL	X Y Z RX RY RZ
180	GLOBAL	X Y Z RX RY RZ
181	GLOBAL	X Y Z RX RY RZ
200	GLOBAL	X Y Z RX RY RZ
201	GLOBAL	X Y Z RX RY RZ
220	GLOBAL	X Y Z RX RY RZ
221	GLOBAL	X Y Z RX RY RZ
240	GLOBAL	X Y Z RX RY RZ
241	GLOBAL	X Y Z RX RY RZ
260	GLOBAL	X Y Z RX RY RZ
261	GLOBAL	X Y Z RX RY RZ
280	GLOBAL	X Y Z RX RY RZ
281	GLOBAL	X Y Z RX RY RZ
300	GLOBAL	X Y Z RX RY RZ

========== I M A G E S 3 D ==========
= Copyright (c) 1984 Celestial Software Inc. =
==========

SOLVE DISPLACEMENTS Version 2.0 07/01/90

L O A D C A S E 1

DEAD LOAD, D

GRAVITY LOADING

Direction	Gravity Factor	Load Factor
X	.0000E+00	.1000E+01
Y	-.1000E+01	.1000E+01
Z	.0000E+00	.1000E+01

INERTIA LOADING

Direction	Translational Accel.	Rotational Accel.	Rotational Velocity	Origin
X	.0000E+00	.0000E+00	.0000E+00	.0000E+00
Y	.0000E+00	.0000E+00	.0000E+00	.0000E+00
Z	.0000E+00	.0000E+00	.0000E+00	.0000E+00

Gravity Acceleration = .3864E+03

REFERENCE TEMPERATURE = .0000E+00

PLATE TEMPERATURES/PRESSURES

Plate/Temp Plate/Pressure Plate/Lat. load	Node1 Node1 Side	Node2 Node2 Dir.	Node3 Node3 Node1	Node4 Node4 Node2
191	.0000E+00	.0000E+00	.0000E+00	.0000E+00
	.0000E+00	.0000E+00	.0000E+00	.0000E+00
	1	3	-.4900E+02	-.4900E+02
192	.0000E+00	.0000E+00	.0000E+00	.0000E+00
	.0000E+00	.0000E+00	.0000E+00	.0000E+00
	1	3	-.4900E+02	-.4900E+02
193	.0000E+00	.0000E+00	.0000E+00	.0000E+00
	.0000E+00	.0000E+00	.0000E+00	.0000E+00
	1	3	-.4900E+02	-.4900E+02
194	.0000E+00	.0000E+00	.0000E+00	.0000E+00
	.0000E+00	.0000E+00	.0000E+00	.0000E+00
	1	3	-.4900E+02	-.4900E+02

========== I M A G E S 3 D ==========
= Copyright (c) 1984 Celestial Software Inc. =
==========

SOLVE DISPLACEMENTS Version 2.0 07/01/90

L O A D C A S E 1

DEAD LOAD, D

Plate/Temp Plate/Pressure Plate/Lat. load	Node1 Node1 Side	Node2 Node2 Dir.	Node3 Node3 Node1	Node4 Node4 Node2
195	.0000E+00	.0000E+00	.0000E+00	.0000E+00
	.0000E+00	.0000E+00	.0000E+00	.0000E+00
	1	3	-.4900E+02	-.4900E+02
196	.0000E+00	.0000E+00	.0000E+00	.0000E+00
	.0000E+00	.0000E+00	.0000E+00	.0000E+00
	1	3	-.4900E+02	-.4900E+02
197	.0000E+00	.0000E+00	.0000E+00	.0000E+00
	.0000E+00	.0000E+00	.0000E+00	.0000E+00
	1	3	-.4900E+02	-.4900E+02
198	.0000E+00	.0000E+00	.0000E+00	.0000E+00
	.0000E+00	.0000E+00	.0000E+00	.0000E+00
	1	3	-.4900E+02	-.4900E+02
199	.0000E+00	.0000E+00	.0000E+00	.0000E+00
	.0000E+00	.0000E+00	.0000E+00	.0000E+00
	1	3	-.4900E+02	-.4900E+02
200	.0000E+00	.0000E+00	.0000E+00	.0000E+00
	.0000E+00	.0000E+00	.0000E+00	.0000E+00
	1	3	-.4900E+02	-.4900E+02
201	.0000E+00	.0000E+00	.0000E+00	.0000E+00
	.0000E+00	.0000E+00	.0000E+00	.0000E+00
	1	3	-.4900E+02	-.4900E+02
202	.0000E+00	.0000E+00	.0000E+00	.0000E+00
	.0000E+00	.0000E+00	.0000E+00	.0000E+00
	1	3	-.4900E+02	-.4900E+02
203	.0000E+00	.0000E+00	.0000E+00	.0000E+00
	.0000E+00	.0000E+00	.0000E+00	.0000E+00
	1	3	-.4900E+02	-.4900E+02
204	.0000E+00	.0000E+00	.0000E+00	.0000E+00
	.0000E+00	.0000E+00	.0000E+00	.0000E+00
	1	3	-.4900E+02	-.4900E+02
205	.0000E+00	.0000E+00	.0000E+00	.0000E+00
	.0000E+00	.0000E+00	.0000E+00	.0000E+00
	1	3	-.4900E+02	-.4900E+02
206	.0000E+00	.0000E+00	.0000E+00	.0000E+00
	.0000E+00	.0000E+00	.0000E+00	.0000E+00
	1	3	-.4900E+02	-.4900E+02
207	.0000E+00	.0000E+00	.0000E+00	.0000E+00
	.0000E+00	.0000E+00	.0000E+00	.0000E+00
	1	3	-.4900E+02	-.4900E+02
208	.0000E+00	.0000E+00	.0000E+00	.0000E+00
	.0000E+00	.0000E+00	.0000E+00	.0000E+00

IMAGES 3D

= Copyright (c) 1984 Celestial Software Inc. =

SOLVE DISPLACEMENTS Version 2.0 07/01/90

LOAD CASE 1

DEAD LOAD, D

Plate/Temp Plate/Pressure Plate/Lat. load	Node1 Node1 Side	Node2 Node2 Dir.	Node3 Node3 Node1	Node4 Node4 Node2
	1	3	-.4900E+02	-.4900E+02
209	.0000E+00	.0000E+00	.0000E+00	.0000E+00
	.0000E+00	.0000E+00	.0000E+00	.0000E+00
	1	3	-.4900E+02	-.4900E+02
210	.0000E+00	.0000E+00	.0000E+00	.0000E+00
	.0000E+00	.0000E+00	.0000E+00	.0000E+00
	1	2	-.8500E+02	-.8500E+02
	3	3	.4900E+02	.4900E+02
211	.0000E+00	.0000E+00	.0000E+00	.0000E+00
	.0000E+00	.0000E+00	.0000E+00	.0000E+00
	1	2	-.8500E+02	-.8500E+02
	3	3	.4900E+02	.4900E+02
212	.0000E+00	.0000E+00	.0000E+00	.0000E+00
	.0000E+00	.0000E+00	.0000E+00	.0000E+00
	1	2	-.8500E+02	-.8500E+02
	3	3	.4900E+02	.4900E+02
213	.0000E+00	.0000E+00	.0000E+00	.0000E+00
	.0000E+00	.0000E+00	.0000E+00	.0000E+00
	1	2	-.8500E+02	-.8500E+02
	3	3	.4900E+02	.4900E+02
214	.0000E+00	.0000E+00	.0000E+00	.0000E+00
	.0000E+00	.0000E+00	.0000E+00	.0000E+00
	1	2	-.8500E+02	-.8500E+02
	3	3	.4900E+02	.4900E+02
215	.0000E+00	.0000E+00	.0000E+00	.0000E+00
	.0000E+00	.0000E+00	.0000E+00	.0000E+00
	1	2	-.8500E+02	-.8500E+02
	3	3	.4900E+02	.4900E+02
216	.0000E+00	.0000E+00	.0000E+00	.0000E+00
	.0000E+00	.0000E+00	.0000E+00	.0000E+00
	1	2	-.8500E+02	-.8500E+02
	3	3	.4900E+02	.4900E+02
217	.0000E+00	.0000E+00	.0000E+00	.0000E+00
	.0000E+00	.0000E+00	.0000E+00	.0000E+00
	1	2	-.8500E+02	-.8500E+02
	3	3	.4900E+02	.4900E+02
218	.0000E+00	.0000E+00	.0000E+00	.0000E+00
	.0000E+00	.0000E+00	.0000E+00	.0000E+00
	1	2	-.8500E+02	-.8500E+02
	3	3	.4900E+02	.4900E+02

IMAGES 3D

= Copyright (c) 1984 Celestial Software Inc. =

SOLVE DISPLACEMENTS Version 2.0 07/01/90

LOAD CASE 1

DEAD LOAD, D

Plate/Temp Plate/Pressure Plate/Lat. load	Node1 Node1 Side	Node2 Node2 Dir.	Node3 Node3 Node1	Node4 Node4 Node2
219	.0000E+00	.0000E+00	.0000E+00	.0000E+00
	.0000E+00	.0000E+00	.0000E+00	.0000E+00
	1	2	-.8500E+02	-.8500E+02
	3	3	.4900E+02	.4900E+02
220	.0000E+00	.0000E+00	.0000E+00	.0000E+00
	.0000E+00	.0000E+00	.0000E+00	.0000E+00
	1	2	-.8500E+02	-.8500E+02
	3	3	.4900E+02	.4900E+02
221	.0000E+00	.0000E+00	.0000E+00	.0000E+00
	.0000E+00	.0000E+00	.0000E+00	.0000E+00
	1	2	-.8500E+02	-.8500E+02
	3	3	.4900E+02	.4900E+02
222	.0000E+00	.0000E+00	.0000E+00	.0000E+00
	.0000E+00	.0000E+00	.0000E+00	.0000E+00
	1	2	-.8500E+02	-.8500E+02
	3	3	.4900E+02	.4900E+02
223	.0000E+00	.0000E+00	.0000E+00	.0000E+00
	.0000E+00	.0000E+00	.0000E+00	.0000E+00
	1	2	-.8500E+02	-.8500E+02
	3	3	.4900E+02	.4900E+02
224	.0000E+00	.0000E+00	.0000E+00	.0000E+00
	.0000E+00	.0000E+00	.0000E+00	.0000E+00
	1	2	-.8500E+02	-.8500E+02
	3	3	.4900E+02	.4900E+02
225	.0000E+00	.0000E+00	.0000E+00	.0000E+00
	.0000E+00	.0000E+00	.0000E+00	.0000E+00
	1	2	-.8500E+02	-.8500E+02
	3	3	.4900E+02	.4900E+02
226	.0000E+00	.0000E+00	.0000E+00	.0000E+00
	.0000E+00	.0000E+00	.0000E+00	.0000E+00
	1	2	-.8500E+02	-.8500E+02
	3	3	.4900E+02	.4900E+02
227	.0000E+00	.0000E+00	.0000E+00	.0000E+00
	.0000E+00	.0000E+00	.0000E+00	.0000E+00
	1	2	-.8500E+02	-.8500E+02
	3	3	.4900E+02	.4900E+02
228	.0000E+00	.0000E+00	.0000E+00	.0000E+00
	.0000E+00	.0000E+00	.0000E+00	.0000E+00
	1	2	-.8500E+02	-.8500E+02
	3	3	.4900E+02	.4900E+02

I M A G E S 3 D
= Copyright (c) 1984 Celestial Software Inc. =

SOLVE DISPLACEMENTS Version 2.0 07/01/90

L O A D C A S E 2

LIVE LOAD, L - OVERBURDEN PRESSURE

GRAVITY LOADING

Direction	Gravity Factor	Load Factor
X	.0000E+00	.1000E+01
Y	.0000E+00	.1000E+01
Z	.0000E+00	.1000E+01

INERTIA LOADING

Direction	Translational Accel.	Rotational Accel.	Rotational Velocity	Origin
X	.0000E+00	.0000E+00	.0000E+00	.0000E+00
Y	.0000E+00	.0000E+00	.0000E+00	.0000E+00
Z	.0000E+00	.0000E+00	.0000E+00	.0000E+00

Gravity Acceleration = .3864E+03

REFERENCE TEMPERATURE = .0000E+00

PLATE TEMPERATURES/PRESSURES

Plate/Temp Plate/Pressure Plate/Lat. load	Node1 Node1 Side	Node2 Node2 Dir.	Node3 Node3 Node1	Node4 Node4 Node2
1	.0000E+00	.0000E+00	.0000E+00	.0000E+00
	.1200E+00	.1200E+00	.1200E+00	.1200E+00
2	.0000E+00	.0000E+00	.0000E+00	.0000E+00
	.1200E+00	.1200E+00	.1200E+00	.1200E+00
3	.0000E+00	.0000E+00	.0000E+00	.0000E+00
	.1200E+00	.1200E+00	.1200E+00	.1200E+00
4	.0000E+00	.0000E+00	.0000E+00	.0000E+00
	.1200E+00	.1200E+00	.1200E+00	.1200E+00
5	.0000E+00	.0000E+00	.0000E+00	.0000E+00
	.1200E+00	.1200E+00	.1200E+00	.1200E+00
6	.0000E+00	.0000E+00	.0000E+00	.0000E+00
	.1200E+00	.1200E+00	.1200E+00	.1200E+00

I M A G E S 3 D
= Copyright (c) 1984 Celestial Software Inc. =

SOLVE DISPLACEMENTS Version 2.0 07/01/90

L O A D C A S E 2

LIVE LOAD, L - OVERBURDEN PRESSURE

Plate/Temp Plate/Pressure Plate/Lat. load	Node1 Node1 Side	Node2 Node2 Dir.	Node3 Node3 Node1	Node4 Node4 Node2
7	.0000E+00	.0000E+00	.0000E+00	.0000E+00
	.1200E+00	.1200E+00	.1200E+00	.1200E+00
8	.0000E+00	.0000E+00	.0000E+00	.0000E+00
	.1200E+00	.1200E+00	.1200E+00	.1200E+00
9	.0000E+00	.0000E+00	.0000E+00	.0000E+00
	.1200E+00	.1200E+00	.1200E+00	.1200E+00
10	.0000E+00	.0000E+00	.0000E+00	.0000E+00
	.1200E+00	.1200E+00	.1200E+00	.1200E+00
11	.0000E+00	.0000E+00	.0000E+00	.0000E+00
	.1200E+00	.1200E+00	.1200E+00	.1200E+00
12	.0000E+00	.0000E+00	.0000E+00	.0000E+00
	.1200E+00	.1200E+00	.1200E+00	.1200E+00
13	.0000E+00	.0000E+00	.0000E+00	.0000E+00
	.1200E+00	.1200E+00	.1200E+00	.1200E+00
14	.0000E+00	.0000E+00	.0000E+00	.0000E+00
	.1200E+00	.1200E+00	.1200E+00	.1200E+00
15	.0000E+00	.0000E+00	.0000E+00	.0000E+00
	.1200E+00	.1200E+00	.1200E+00	.1200E+00
16	.0000E+00	.0000E+00	.0000E+00	.0000E+00
	.1200E+00	.1200E+00	.1200E+00	.1200E+00
17	.0000E+00	.0000E+00	.0000E+00	.0000E+00
	.1200E+00	.1200E+00	.1200E+00	.1200E+00
18	.0000E+00	.0000E+00	.0000E+00	.0000E+00
	.1200E+00	.1200E+00	.1200E+00	.1200E+00
19	.0000E+00	.0000E+00	.0000E+00	.0000E+00
	.1200E+00	.1200E+00	.1200E+00	.1200E+00
20	.0000E+00	.0000E+00	.0000E+00	.0000E+00
	.1200E+00	.1200E+00	.1200E+00	.1200E+00
21	.0000E+00	.0000E+00	.0000E+00	.0000E+00
	.1200E+00	.1200E+00	.1200E+00	.1200E+00
22	.0000E+00	.0000E+00	.0000E+00	.0000E+00
	.1200E+00	.1200E+00	.1200E+00	.1200E+00
23	.0000E+00	.0000E+00	.0000E+00	.0000E+00
	.1200E+00	.1200E+00	.1200E+00	.1200E+00
24	.0000E+00	.0000E+00	.0000E+00	.0000E+00
	.1200E+00	.1200E+00	.1200E+00	.1200E+00
25	.0000E+00	.0000E+00	.0000E+00	.0000E+00
	.1200E+00	.1200E+00	.1200E+00	.1200E+00
26	.0000E+00	.0000E+00	.0000E+00	.0000E+00
	.1200E+00	.1200E+00	.1200E+00	.1200E+00

========== I M A G E S 3 D ==========
* Copyright (c) 1984 Celestial Software Inc. *
==========

SOLVE DISPLACEMENTS Version 2.0 07/01/90

L O A D C A S E 2

LIVE LOAD, L - OVERBURDEN PRESSURE

Plate/Temp Plate/Pressure Plate/Lat. load	Node1 Node1 Side	Node2 Node2 Dir.	Node3 Node3 Node1	Node4 Node4 Node2
27	.0000E+00 .1200E+00	.0000E+00 .1200E+00	.0000E+00 .1200E+00	.0000E+00 .1200E+00
28	.0000E+00 .1200E+00	.0000E+00 .1200E+00	.0000E+00 .1200E+00	.0000E+00 .1200E+00
29	.0000E+00 .1200E+00	.0000E+00 .1200E+00	.0000E+00 .1200E+00	.0000E+00 .1200E+00
30	.0000E+00 .1200E+00	.0000E+00 .1200E+00	.0000E+00 .1200E+00	.0000E+00 .1200E+00
31	.0000E+00 .1200E+00	.0000E+00 .1200E+00	.0000E+00 .1200E+00	.0000E+00 .1200E+00
32	.0000E+00 .1200E+00	.0000E+00 .1200E+00	.0000E+00 .1200E+00	.0000E+00 .1200E+00
33	.0000E+00 .1200E+00	.0000E+00 .1200E+00	.0000E+00 .1200E+00	.0000E+00 .1200E+00
34	.0000E+00 .1200E+00	.0000E+00 .1200E+00	.0000E+00 .1200E+00	.0000E+00 .1200E+00
35	.0000E+00 .1200E+00	.0000E+00 .1200E+00	.0000E+00 .1200E+00	.0000E+00 .1200E+00
36	.0000E+00 .1200E+00	.0000E+00 .1200E+00	.0000E+00 .1200E+00	.0000E+00 .1200E+00
37	.0000E+00 .1200E+00	.0000E+00 .1200E+00	.0000E+00 .1200E+00	.0000E+00 .1200E+00
38	.0000E+00 .1200E+00	.0000E+00 .1200E+00	.0000E+00 .1200E+00	.0000E+00 .1200E+00
39	.0000E+00 .1200E+00	.0000E+00 .1200E+00	.0000E+00 .1200E+00	.0000E+00 .1200E+00
40	.0000E+00 .1200E+00	.0000E+00 .1200E+00	.0000E+00 .1200E+00	.0000E+00 .1200E+00
41	.0000E+00 .1200E+00	.0000E+00 .1200E+00	.0000E+00 .1200E+00	.0000E+00 .1200E+00
42	.0000E+00 .1200E+00	.0000E+00 .1200E+00	.0000E+00 .1200E+00	.0000E+00 .1200E+00
43	.0000E+00 .1200E+00	.0000E+00 .1200E+00	.0000E+00 .1200E+00	.0000E+00 .1200E+00
44	.0000E+00 .1200E+00	.0000E+00 .1200E+00	.0000E+00 .1200E+00	.0000E+00 .1200E+00
45	.0000E+00 .1200E+00	.0000E+00 .1200E+00	.0000E+00 .1200E+00	.0000E+00 .1200E+00
46	.0000E+00 .1200E+00	.0000E+00 .1200E+00	.0000E+00 .1200E+00	.0000E+00 .1200E+00

========== I M A G E S 3 D ==========
* Copyright (c) 1984 Celestial Software Inc. *
==========

SOLVE DISPLACEMENTS Version 2.0 07/01/90

L O A D C A S E 2

LIVE LOAD, L - OVERBURDEN PRESSURE

Plate/Temp Plate/Pressure Plate/Lat. load	Node1 Node1 Side	Node2 Node2 Dir.	Node3 Node3 Node1	Node4 Node4 Node2
47	.0000E+00 .1200E+00	.0000E+00 .1200E+00	.0000E+00 .1200E+00	.0000E+00 .1200E+00
48	.0000E+00 .1200E+00	.0000E+00 .1200E+00	.0000E+00 .1200E+00	.0000E+00 .1200E+00
49	.0000E+00 .1200E+00	.0000E+00 .1200E+00	.0000E+00 .1200E+00	.0000E+00 .1200E+00
50	.0000E+00 .1200E+00	.0000E+00 .1200E+00	.0000E+00 .1200E+00	.0000E+00 .1200E+00
51	.0000E+00 .1200E+00	.0000E+00 .1200E+00	.0000E+00 .1200E+00	.0000E+00 .1200E+00
52	.0000E+00 .1200E+00	.0000E+00 .1200E+00	.0000E+00 .1200E+00	.0000E+00 .1200E+00
53	.0000E+00 .1200E+00	.0000E+00 .1200E+00	.0000E+00 .1200E+00	.0000E+00 .1200E+00
54	.0000E+00 .1200E+00	.0000E+00 .1200E+00	.0000E+00 .1200E+00	.0000E+00 .1200E+00
55	.0000E+00 .1200E+00	.0000E+00 .1200E+00	.0000E+00 .1200E+00	.0000E+00 .1200E+00
56	.0000E+00 .1200E+00	.0000E+00 .1200E+00	.0000E+00 .1200E+00	.0000E+00 .1200E+00
57	.0000E+00 .1200E+00	.0000E+00 .1200E+00	.0000E+00 .1200E+00	.0000E+00 .1200E+00
58	.0000E+00 .1200E+00	.0000E+00 .1200E+00	.0000E+00 .1200E+00	.0000E+00 .1200E+00
59	.0000E+00 .1200E+00	.0000E+00 .1200E+00	.0000E+00 .1200E+00	.0000E+00 .1200E+00
60	.0000E+00 .1200E+00	.0000E+00 .1200E+00	.0000E+00 .1200E+00	.0000E+00 .1200E+00
61	.0000E+00 .1200E+00	.0000E+00 .1200E+00	.0000E+00 .1200E+00	.0000E+00 .1200E+00
62	.0000E+00 .1200E+00	.0000E+00 .1200E+00	.0000E+00 .1200E+00	.0000E+00 .1200E+00
63	.0000E+00 .1200E+00	.0000E+00 .1200E+00	.0000E+00 .1200E+00	.0000E+00 .1200E+00
64	.0000E+00 .1200E+00	.0000E+00 .1200E+00	.0000E+00 .1200E+00	.0000E+00 .1200E+00
65	.0000E+00 .1200E+00	.0000E+00 .1200E+00	.0000E+00 .1200E+00	.0000E+00 .1200E+00
66	.0000E+00 .1200E+00	.0000E+00 .1200E+00	.0000E+00 .1200E+00	.0000E+00 .1200E+00

IMAGES 3D

= Copyright (c) 1984 Celestial Software Inc. =

SOLVE DISPLACEMENTS Version 2.0 07/01/90

LOAD CASE 2

LIVE LOAD, L - OVERBURDEN PRESSURE

Plate/Temp Plate/Pressure Plate/Lat. load	Node1 Node1 Side	Node2 Node2 Dir.	Node3 Node3 Node1	Node4 Node4 Node2
67	.0000E+00	.0000E+00	.0000E+00	.0000E+00
	.1200E+00	.1200E+00	.1200E+00	.1200E+00
68	.0000E+00	.0000E+00	.0000E+00	.0000E+00
	.1200E+00	.1200E+00	.1200E+00	.1200E+00
69	.0000E+00	.0000E+00	.0000E+00	.0000E+00
	.1200E+00	.1200E+00	.1200E+00	.1200E+00
70	.0000E+00	.0000E+00	.0000E+00	.0000E+00
	.1200E+00	.1200E+00	.1200E+00	.1200E+00
71	.0000E+00	.0000E+00	.0000E+00	.0000E+00
	.1200E+00	.1200E+00	.1200E+00	.1200E+00
72	.0000E+00	.0000E+00	.0000E+00	.0000E+00
	.1200E+00	.1200E+00	.1200E+00	.1200E+00
73	.0000E+00	.0000E+00	.0000E+00	.0000E+00
	.1200E+00	.1200E+00	.1200E+00	.1200E+00
74	.0000E+00	.0000E+00	.0000E+00	.0000E+00
	.1200E+00	.1200E+00	.1200E+00	.1200E+00
75	.0000E+00	.0000E+00	.0000E+00	.0000E+00
	.1200E+00	.1200E+00	.1200E+00	.1200E+00
76	.0000E+00	.0000E+00	.0000E+00	.0000E+00
	.1200E+00	.1200E+00	.1200E+00	.1200E+00
77	.0000E+00	.0000E+00	.0000E+00	.0000E+00
	.1200E+00	.1200E+00	.1200E+00	.1200E+00
78	.0000E+00	.0000E+00	.0000E+00	.0000E+00
	.1200E+00	.1200E+00	.1200E+00	.1200E+00
79	.0000E+00	.0000E+00	.0000E+00	.0000E+00
	.1200E+00	.1200E+00	.1200E+00	.1200E+00
80	.0000E+00	.0000E+00	.0000E+00	.0000E+00
	.1200E+00	.1200E+00	.1200E+00	.1200E+00
81	.0000E+00	.0000E+00	.0000E+00	.0000E+00
	.1200E+00	.1200E+00	.1200E+00	.1200E+00
82	.0000E+00	.0000E+00	.0000E+00	.0000E+00
	.1200E+00	.1200E+00	.1200E+00	.1200E+00
83	.0000E+00	.0000E+00	.0000E+00	.0000E+00
	.1200E+00	.1200E+00	.1200E+00	.1200E+00
84	.0000E+00	.0000E+00	.0000E+00	.0000E+00
	.1200E+00	.1200E+00	.1200E+00	.1200E+00
85	.0000E+00	.0000E+00	.0000E+00	.0000E+00
	.1200E+00	.1200E+00	.1200E+00	.1200E+00
86	.0000E+00	.0000E+00	.0000E+00	.0000E+00
	.1200E+00	.1200E+00	.1200E+00	.1200E+00

IMAGES 3D

= Copyright (c) 1984 Celestial Software Inc. =

SOLVE DISPLACEMENTS Version 2.0 07/01/90

LOAD CASE 2

LIVE LOAD, L - OVERBURDEN PRESSURE

Plate/Temp Plate/Pressure Plate/Lat. load	Node1 Node1 Side	Node2 Node2 Dir.	Node3 Node3 Node1	Node4 Node4 Node2
87	.0000E+00	.0000E+00	.0000E+00	.0000E+00
	.1200E+00	.1200E+00	.1200E+00	.1200E+00
88	.0000E+00	.0000E+00	.0000E+00	.0000E+00
	.1200E+00	.1200E+00	.1200E+00	.1200E+00
89	.0000E+00	.0000E+00	.0000E+00	.0000E+00
	.1200E+00	.1200E+00	.1200E+00	.1200E+00
90	.0000E+00	.0000E+00	.0000E+00	.0000E+00
	.1200E+00	.1200E+00	.1200E+00	.1200E+00
91	.0000E+00	.0000E+00	.0000E+00	.0000E+00
	.1200E+00	.1200E+00	.1200E+00	.1200E+00
92	.0000E+00	.0000E+00	.0000E+00	.0000E+00
	.1200E+00	.1200E+00	.1200E+00	.1200E+00
93	.0000E+00	.0000E+00	.0000E+00	.0000E+00
	.1200E+00	.1200E+00	.1200E+00	.1200E+00
94	.0000E+00	.0000E+00	.0000E+00	.0000E+00
	.1200E+00	.1200E+00	.1200E+00	.1200E+00
95	.0000E+00	.0000E+00	.0000E+00	.0000E+00
	.1200E+00	.1200E+00	.1200E+00	.1200E+00
96	.0000E+00	.0000E+00	.0000E+00	.0000E+00
	.1200E+00	.1200E+00	.1200E+00	.1200E+00
97	.0000E+00	.0000E+00	.0000E+00	.0000E+00
	.1200E+00	.1200E+00	.1200E+00	.1200E+00
98	.0000E+00	.0000E+00	.0000E+00	.0000E+00
	.1200E+00	.1200E+00	.1200E+00	.1200E+00
99	.0000E+00	.0000E+00	.0000E+00	.0000E+00
	.1200E+00	.1200E+00	.1200E+00	.1200E+00
100	.0000E+00	.0000E+00	.0000E+00	.0000E+00
	.1200E+00	.1200E+00	.1200E+00	.1200E+00
101	.0000E+00	.0000E+00	.0000E+00	.0000E+00
	.1200E+00	.1200E+00	.1200E+00	.1200E+00
102	.0000E+00	.0000E+00	.0000E+00	.0000E+00
	.1200E+00	.1200E+00	.1200E+00	.1200E+00
103	.0000E+00	.0000E+00	.0000E+00	.0000E+00
	.1200E+00	.1200E+00	.1200E+00	.1200E+00
104	.0000E+00	.0000E+00	.0000E+00	.0000E+00
	.1200E+00	.1200E+00	.1200E+00	.1200E+00
105	.0000E+00	.0000E+00	.0000E+00	.0000E+00
	.1200E+00	.1200E+00	.1200E+00	.1200E+00
106	.0000E+00	.0000E+00	.0000E+00	.0000E+00
	.1200E+00	.1200E+00	.1200E+00	.1200E+00

IMAGES 3D

= Copyright (c) 1984 Celestial Software Inc. =

SOLVE DISPLACEMENTS Version 2.0 07/01/90

LOAD CASE 2

LIVE LOAD, L - OVERBURDEN PRESSURE

Plate/Temp Plate/Pressure Plate/Lat. load	Node1 Node1 Side	Node2 Node2 Dir.	Node3 Node3 Node1	Node4 Node4 Node2
107	.0000E+00	.0000E+00	.0000E+00	.0000E+00
	.1200E+00	.1200E+00	.1200E+00	.1200E+00
108	.0000E+00	.0000E+00	.0000E+00	.0000E+00
	.1200E+00	.1200E+00	.1200E+00	.1200E+00
109	.0000E+00	.0000E+00	.0000E+00	.0000E+00
	.1200E+00	.1200E+00	.1200E+00	.1200E+00
110	.0000E+00	.0000E+00	.0000E+00	.0000E+00
	.1200E+00	.1200E+00	.1200E+00	.1200E+00
111	.0000E+00	.0000E+00	.0000E+00	.0000E+00
	.1200E+00	.1200E+00	.1200E+00	.1200E+00
112	.0000E+00	.0000E+00	.0000E+00	.0000E+00
	.1200E+00	.1200E+00	.1200E+00	.1200E+00
113	.0000E+00	.0000E+00	.0000E+00	.0000E+00
	.1200E+00	.1200E+00	.1200E+00	.1200E+00
114	.0000E+00	.0000E+00	.0000E+00	.0000E+00
	.1200E+00	.1200E+00	.1200E+00	.1200E+00
115	.0000E+00	.0000E+00	.0000E+00	.0000E+00
	.1200E+00	.1200E+00	.1200E+00	.1200E+00
116	.0000E+00	.0000E+00	.0000E+00	.0000E+00
	.1200E+00	.1200E+00	.1200E+00	.1200E+00
117	.0000E+00	.0000E+00	.0000E+00	.0000E+00
	.1200E+00	.1200E+00	.1200E+00	.1200E+00
118	.0000E+00	.0000E+00	.0000E+00	.0000E+00
	.1200E+00	.1200E+00	.1200E+00	.1200E+00
119	.0000E+00	.0000E+00	.0000E+00	.0000E+00
	.1200E+00	.1200E+00	.1200E+00	.1200E+00
120	.0000E+00	.0000E+00	.0000E+00	.0000E+00
	.1200E+00	.1200E+00	.1200E+00	.1200E+00
121	.0000E+00	.0000E+00	.0000E+00	.0000E+00
	.1200E+00	.1200E+00	.1200E+00	.1200E+00
122	.0000E+00	.0000E+00	.0000E+00	.0000E+00
	.1200E+00	.1200E+00	.1200E+00	.1200E+00
123	.0000E+00	.0000E+00	.0000E+00	.0000E+00
	.1200E+00	.1200E+00	.1200E+00	.1200E+00
124	.0000E+00	.0000E+00	.0000E+00	.0000E+00
	.1200E+00	.1200E+00	.1200E+00	.1200E+00
125	.0000E+00	.0000E+00	.0000E+00	.0000E+00
	.1200E+00	.1200E+00	.1200E+00	.1200E+00
126	.0000E+00	.0000E+00	.0000E+00	.0000E+00
	.1200E+00	.1200E+00	.1200E+00	.1200E+00

IMAGES 3D

= Copyright (c) 1984 Celestial Software Inc. =

SOLVE DISPLACEMENTS Version 2.0 07/01/90

LOAD CASE 2

LIVE LOAD, L - OVERBURDEN PRESSURE

Plate/Temp Plate/Pressure Plate/Lat. load	Node1 Node1 Side	Node2 Node2 Dir.	Node3 Node3 Node1	Node4 Node4 Node2
127	.0000E+00	.0000E+00	.0000E+00	.0000E+00
	.1200E+00	.1200E+00	.1200E+00	.1200E+00
128	.0000E+00	.0000E+00	.0000E+00	.0000E+00
	.1200E+00	.1200E+00	.1200E+00	.1200E+00
129	.0000E+00	.0000E+00	.0000E+00	.0000E+00
	.1200E+00	.1200E+00	.1200E+00	.1200E+00
130	.0000E+00	.0000E+00	.0000E+00	.0000E+00
	.1200E+00	.1200E+00	.1200E+00	.1200E+00
131	.0000E+00	.0000E+00	.0000E+00	.0000E+00
	.1200E+00	.1200E+00	.1200E+00	.1200E+00
132	.0000E+00	.0000E+00	.0000E+00	.0000E+00
	.1200E+00	.1200E+00	.1200E+00	.1200E+00
133	.0000E+00	.0000E+00	.0000E+00	.0000E+00
	.1200E+00	.1200E+00	.1200E+00	.1200E+00
134	.0000E+00	.0000E+00	.0000E+00	.0000E+00
	.1200E+00	.1200E+00	.1200E+00	.1200E+00
135	.0000E+00	.0000E+00	.0000E+00	.0000E+00
	.1200E+00	.1200E+00	.1200E+00	.1200E+00
136	.0000E+00	.0000E+00	.0000E+00	.0000E+00
	.1200E+00	.1200E+00	.1200E+00	.1200E+00
137	.0000E+00	.0000E+00	.0000E+00	.0000E+00
	.1200E+00	.1200E+00	.1200E+00	.1200E+00
138	.0000E+00	.0000E+00	.0000E+00	.0000E+00
	.1200E+00	.1200E+00	.1200E+00	.1200E+00
139	.0000E+00	.0000E+00	.0000E+00	.0000E+00
	.1200E+00	.1200E+00	.1200E+00	.1200E+00
140	.0000E+00	.0000E+00	.0000E+00	.0000E+00
	.1200E+00	.1200E+00	.1200E+00	.1200E+00
141	.0000E+00	.0000E+00	.0000E+00	.0000E+00
	.1200E+00	.1200E+00	.1200E+00	.1200E+00
142	.0000E+00	.0000E+00	.0000E+00	.0000E+00
	.1200E+00	.1200E+00	.1200E+00	.1200E+00
143	.0000E+00	.0000E+00	.0000E+00	.0000E+00
	.1200E+00	.1200E+00	.1200E+00	.1200E+00
144	.0000E+00	.0000E+00	.0000E+00	.0000E+00
	.1200E+00	.1200E+00	.1200E+00	.1200E+00
145	.0000E+00	.0000E+00	.0000E+00	.0000E+00
	.1200E+00	.1200E+00	.1200E+00	.1200E+00
146	.0000E+00	.0000E+00	.0000E+00	.0000E+00
	.1200E+00	.1200E+00	.1200E+00	.1200E+00

========== I M A G E S 3 D ==========
= Copyright (c) 1984 Celestial Software Inc. =
==========

SOLVE DISPLACEMENTS Version 2.0 07/01/90

L O A D C A S E 2

LIVE LOAD, L - OVERBURDEN PRESSURE

Plate/Temp Plate/Pressure Plate/Lat. load	Node1 Node1 Side	Node2 Node2 Dir.	Node3 Node3 Node1	Node4 Node4 Node2
147	.0000E+00	.0000E+00	.0000E+00	.0000E+00
	.1200E+00	.1200E+00	.1200E+00	.1200E+00
148	.0000E+00	.0000E+00	.0000E+00	.0000E+00
	.1200E+00	.1200E+00	.1200E+00	.1200E+00
149	.0000E+00	.0000E+00	.0000E+00	.0000E+00
	.1200E+00	.1200E+00	.1200E+00	.1200E+00
150	.0000E+00	.0000E+00	.0000E+00	.0000E+00
	.1200E+00	.1200E+00	.1200E+00	.1200E+00
151	.0000E+00	.0000E+00	.0000E+00	.0000E+00
	.1200E+00	.1200E+00	.1200E+00	.1200E+00
152	.0000E+00	.0000E+00	.0000E+00	.0000E+00
	.1200E+00	.1200E+00	.1200E+00	.1200E+00
153	.0000E+00	.0000E+00	.0000E+00	.0000E+00
	.1200E+00	.1200E+00	.1200E+00	.1200E+00
154	.0000E+00	.0000E+00	.0000E+00	.0000E+00
	.1200E+00	.1200E+00	.1200E+00	.1200E+00
155	.0000E+00	.0000E+00	.0000E+00	.0000E+00
	.1200E+00	.1200E+00	.1200E+00	.1200E+00
156	.0000E+00	.0000E+00	.0000E+00	.0000E+00
	.1200E+00	.1200E+00	.1200E+00	.1200E+00
157	.0000E+00	.0000E+00	.0000E+00	.0000E+00
	.1200E+00	.1200E+00	.1200E+00	.1200E+00
158	.0000E+00	.0000E+00	.0000E+00	.0000E+00
	.1200E+00	.1200E+00	.1200E+00	.1200E+00
159	.0000E+00	.0000E+00	.0000E+00	.0000E+00
	.1200E+00	.1200E+00	.1200E+00	.1200E+00
160	.0000E+00	.0000E+00	.0000E+00	.0000E+00
	.1200E+00	.1200E+00	.1200E+00	.1200E+00
161	.0000E+00	.0000E+00	.0000E+00	.0000E+00
	.1200E+00	.1200E+00	.1200E+00	.1200E+00
162	.0000E+00	.0000E+00	.0000E+00	.0000E+00
	.1200E+00	.1200E+00	.1200E+00	.1200E+00
163	.0000E+00	.0000E+00	.0000E+00	.0000E+00
	.1200E+00	.1200E+00	.1200E+00	.1200E+00
164	.0000E+00	.0000E+00	.0000E+00	.0000E+00
	.1200E+00	.1200E+00	.1200E+00	.1200E+00
165	.0000E+00	.0000E+00	.0000E+00	.0000E+00
	.1200E+00	.1200E+00	.1200E+00	.1200E+00
166	.0000E+00	.0000E+00	.0000E+00	.0000E+00
	.1200E+00	.1200E+00	.1200E+00	.1200E+00

========== I M A G E S 3 D ==========
= Copyright (c) 1984 Celestial Software Inc. =
==========

SOLVE DISPLACEMENTS Version 2.0 07/01/90

L O A D C A S E 2

LIVE LOAD, L - OVERBURDEN PRESSURE

Plate/Temp Plate/Pressure Plate/Lat. load	Node1 Node1 Side	Node2 Node2 Dir.	Node3 Node3 Node1	Node4 Node4 Node2
167	.0000E+00	.0000E+00	.0000E+00	.0000E+00
	.1200E+00	.1200E+00	.1200E+00	.1200E+00
168	.0000E+00	.0000E+00	.0000E+00	.0000E+00
	.1200E+00	.1200E+00	.1200E+00	.1200E+00
169	.0000E+00	.0000E+00	.0000E+00	.0000E+00
	.1200E+00	.1200E+00	.1200E+00	.1200E+00
170	.0000E+00	.0000E+00	.0000E+00	.0000E+00
	.1200E+00	.1200E+00	.1200E+00	.1200E+00
171	.0000E+00	.0000E+00	.0000E+00	.0000E+00
	.1200E+00	.1200E+00	.1200E+00	.1200E+00
172	.0000E+00	.0000E+00	.0000E+00	.0000E+00
	.1200E+00	.1200E+00	.1200E+00	.1200E+00
173	.0000E+00	.0000E+00	.0000E+00	.0000E+00
	.1200E+00	.1200E+00	.1200E+00	.1200E+00
174	.0000E+00	.0000E+00	.0000E+00	.0000E+00
	.1200E+00	.1200E+00	.1200E+00	.1200E+00
175	.0000E+00	.0000E+00	.0000E+00	.0000E+00
	.1200E+00	.1200E+00	.1200E+00	.1200E+00
176	.0000E+00	.0000E+00	.0000E+00	.0000E+00
	.1200E+00	.1200E+00	.1200E+00	.1200E+00
177	.0000E+00	.0000E+00	.0000E+00	.0000E+00
	.1200E+00	.1200E+00	.1200E+00	.1200E+00
178	.0000E+00	.0000E+00	.0000E+00	.0000E+00
	.1200E+00	.1200E+00	.1200E+00	.1200E+00
179	.0000E+00	.0000E+00	.0000E+00	.0000E+00
	.1200E+00	.1200E+00	.1200E+00	.1200E+00
180	.0000E+00	.0000E+00	.0000E+00	.0000E+00
	.1200E+00	.1200E+00	.1200E+00	.1200E+00
181	.0000E+00	.0000E+00	.0000E+00	.0000E+00
	.1200E+00	.1200E+00	.1200E+00	.1200E+00
182	.0000E+00	.0000E+00	.0000E+00	.0000E+00
	.1200E+00	.1200E+00	.1200E+00	.1200E+00
183	.0000E+00	.0000E+00	.0000E+00	.0000E+00
	.1200E+00	.1200E+00	.1200E+00	.1200E+00
184	.0000E+00	.0000E+00	.0000E+00	.0000E+00
	.1200E+00	.1200E+00	.1200E+00	.1200E+00
185	.0000E+00	.0000E+00	.0000E+00	.0000E+00
	.1200E+00	.1200E+00	.1200E+00	.1200E+00
186	.0000E+00	.0000E+00	.0000E+00	.0000E+00
	.1200E+00	.1200E+00	.1200E+00	.1200E+00

========== I M A G E S 3 D ==========
= Copyright (c) 1984 Celestial Software Inc. =
==========

SOLVE DISPLACEMENTS Version 2.0 07/01/90

L O A D C A S E 2

LIVE LOAD, L - OVERBURDEN PRESSURE

Plate/Temp Plate/Pressure Plate/Lat. load	Node1 Node1 Side	Node2 Node2 Dir.	Node3 Node3 Node1	Node4 Node4 Node2
187	.0000E+00	.0000E+00	.0000E+00	.0000E+00
	.1200E+00	.1200E+00	.1200E+00	.1200E+00
188	.0000E+00	.0000E+00	.0000E+00	.0000E+00
	.1200E+00	.1200E+00	.1200E+00	.1200E+00
189	.0000E+00	.0000E+00	.0000E+00	.0000E+00
	.1200E+00	.1200E+00	.1200E+00	.1200E+00
190	.0000E+00	.0000E+00	.0000E+00	.0000E+00
	.1200E+00	.1200E+00	.1200E+00	.1200E+00
191	.0000E+00	.0000E+00	.0000E+00	.0000E+00
	.1200E+00	.1200E+00	.1200E+00	.1200E+00
192	.0000E+00	.0000E+00	.0000E+00	.0000E+00
	.1200E+00	.1200E+00	.1200E+00	.1200E+00
193	.0000E+00	.0000E+00	.0000E+00	.0000E+00
	.1200E+00	.1200E+00	.1200E+00	.1200E+00
194	.0000E+00	.0000E+00	.0000E+00	.0000E+00
	.1200E+00	.1200E+00	.1200E+00	.1200E+00
195	.0000E+00	.0000E+00	.0000E+00	.0000E+00
	.1200E+00	.1200E+00	.1200E+00	.1200E+00
196	.0000E+00	.0000E+00	.0000E+00	.0000E+00
	.1200E+00	.1200E+00	.1200E+00	.1200E+00
197	.0000E+00	.0000E+00	.0000E+00	.0000E+00
	.1200E+00	.1200E+00	.1200E+00	.1200E+00
198	.0000E+00	.0000E+00	.0000E+00	.0000E+00
	.1200E+00	.1200E+00	.1200E+00	.1200E+00
199	.0000E+00	.0000E+00	.0000E+00	.0000E+00
	.1200E+00	.1200E+00	.1200E+00	.1200E+00
200	.0000E+00	.0000E+00	.0000E+00	.0000E+00
	.1200E+00	.1200E+00	.1200E+00	.1200E+00
201	.0000E+00	.0000E+00	.0000E+00	.0000E+00
	.1200E+00	.1200E+00	.1200E+00	.1200E+00
202	.0000E+00	.0000E+00	.0000E+00	.0000E+00
	.1200E+00	.1200E+00	.1200E+00	.1200E+00
203	.0000E+00	.0000E+00	.0000E+00	.0000E+00
	.1200E+00	.1200E+00	.1200E+00	.1200E+00
204	.0000E+00	.0000E+00	.0000E+00	.0000E+00
	.1200E+00	.1200E+00	.1200E+00	.1200E+00
205	.0000E+00	.0000E+00	.0000E+00	.0000E+00
	.1200E+00	.1200E+00	.1200E+00	.1200E+00
206	.0000E+00	.0000E+00	.0000E+00	.0000E+00
	.1200E+00	.1200E+00	.1200E+00	.1200E+00

========== I M A G E S 3 D ==========
= Copyright (c) 1984 Celestial Software Inc. =
==========

SOLVE DISPLACEMENTS Version 2.0 07/01/90

L O A D C A S E 2

LIVE LOAD, L - OVERBURDEN PRESSURE

Plate/Temp Plate/Pressure Plate/Lat. load	Node1 Node1 Side	Node2 Node2 Dir.	Node3 Node3 Node1	Node4 Node4 Node2
207	.0000E+00	.0000E+00	.0000E+00	.0000E+00
	.1200E+00	.1200E+00	.1200E+00	.1200E+00
208	.0000E+00	.0000E+00	.0000E+00	.0000E+00
	.1200E+00	.1200E+00	.1200E+00	.1200E+00
209	.0000E+00	.0000E+00	.0000E+00	.0000E+00
	.1200E+00	.1200E+00	.1200E+00	.1200E+00
210	.0000E+00	.0000E+00	.0000E+00	.0000E+00
	.1200E+00	.1200E+00	.1200E+00	.1200E+00
211	.0000E+00	.0000E+00	.0000E+00	.0000E+00
	.1200E+00	.1200E+00	.1200E+00	.1200E+00
212	.0000E+00	.0000E+00	.0000E+00	.0000E+00
	.1200E+00	.1200E+00	.1200E+00	.1200E+00
213	.0000E+00	.0000E+00	.0000E+00	.0000E+00
	.1200E+00	.1200E+00	.1200E+00	.1200E+00
214	.0000E+00	.0000E+00	.0000E+00	.0000E+00
	.1200E+00	.1200E+00	.1200E+00	.1200E+00
215	.0000E+00	.0000E+00	.0000E+00	.0000E+00
	.1200E+00	.1200E+00	.1200E+00	.1200E+00
216	.0000E+00	.0000E+00	.0000E+00	.0000E+00
	.1200E+00	.1200E+00	.1200E+00	.1200E+00
217	.0000E+00	.0000E+00	.0000E+00	.0000E+00
	.1200E+00	.1200E+00	.1200E+00	.1200E+00
218	.0000E+00	.0000E+00	.0000E+00	.0000E+00
	.1200E+00	.1200E+00	.1200E+00	.1200E+00
219	.0000E+00	.0000E+00	.0000E+00	.0000E+00
	.1200E+00	.1200E+00	.1200E+00	.1200E+00
220	.0000E+00	.0000E+00	.0000E+00	.0000E+00
	.1200E+00	.1200E+00	.1200E+00	.1200E+00
221	.0000E+00	.0000E+00	.0000E+00	.0000E+00
	.1200E+00	.1200E+00	.1200E+00	.1200E+00
222	.0000E+00	.0000E+00	.0000E+00	.0000E+00
	.1200E+00	.1200E+00	.1200E+00	.1200E+00
223	.0000E+00	.0000E+00	.0000E+00	.0000E+00
	.1200E+00	.1200E+00	.1200E+00	.1200E+00
224	.0000E+00	.0000E+00	.0000E+00	.0000E+00
	.1200E+00	.1200E+00	.1200E+00	.1200E+00
225	.0000E+00	.0000E+00	.0000E+00	.0000E+00
	.1200E+00	.1200E+00	.1200E+00	.1200E+00
226	.0000E+00	.0000E+00	.0000E+00	.0000E+00
	.1200E+00	.1200E+00	.1200E+00	.1200E+00

========== I M A G E S 3 D ==========
= Copyright (c) 1984 Celestial Software Inc. =
==========

SOLVE DISPLACEMENTS Version 2.0 07/01/90

L O A D C A S E 2

LIVE LOAD, L - OVERBURDEN PRESSURE

Plate/Temp Plate/Pressure Plate/Lat. load	Node1 Node1 Side	Node2 Node2 Dir.	Node3 Node3 Node1	Node4 Node4 Node2
227	.0000E+00	.0000E+00	.0000E+00	.0000E+00
	.1200E+00	.1200E+00	.1200E+00	.1200E+00
228	.0000E+00	.0000E+00	.0000E+00	.0000E+00
	.1200E+00	.1200E+00	.1200E+00	.1200E+00
229	.0000E+00	.0000E+00	.0000E+00	.0000E+00
	.1200E+00	.1200E+00	.1200E+00	.1200E+00
230	.0000E+00	.0000E+00	.0000E+00	.0000E+00
	.1200E+00	.1200E+00	.1200E+00	.1200E+00
231	.0000E+00	.0000E+00	.0000E+00	.0000E+00
	.1200E+00	.1200E+00	.1200E+00	.1200E+00
232	.0000E+00	.0000E+00	.0000E+00	.0000E+00
	.1200E+00	.1200E+00	.1200E+00	.1200E+00
233	.0000E+00	.0000E+00	.0000E+00	.0000E+00
	.1200E+00	.1200E+00	.1200E+00	.1200E+00
234	.0000E+00	.0000E+00	.0000E+00	.0000E+00
	.1200E+00	.1200E+00	.1200E+00	.1200E+00
235	.0000E+00	.0000E+00	.0000E+00	.0000E+00
	.1200E+00	.1200E+00	.1200E+00	.1200E+00
236	.0000E+00	.0000E+00	.0000E+00	.0000E+00
	.1200E+00	.1200E+00	.1200E+00	.1200E+00
237	.0000E+00	.0000E+00	.0000E+00	.0000E+00
	.1200E+00	.1200E+00	.1200E+00	.1200E+00
238	.0000E+00	.0000E+00	.0000E+00	.0000E+00
	.1200E+00	.1200E+00	.1200E+00	.1200E+00
239	.0000E+00	.0000E+00	.0000E+00	.0000E+00
	.1200E+00	.1200E+00	.1200E+00	.1200E+00
240	.0000E+00	.0000E+00	.0000E+00	.0000E+00
	.1200E+00	.1200E+00	.1200E+00	.1200E+00
241	.0000E+00	.0000E+00	.0000E+00	.0000E+00
	.1200E+00	.1200E+00	.1200E+00	.1200E+00
242	.0000E+00	.0000E+00	.0000E+00	.0000E+00
	.1200E+00	.1200E+00	.1200E+00	.1200E+00
243	.0000E+00	.0000E+00	.0000E+00	.0000E+00
	.1200E+00	.1200E+00	.1200E+00	.1200E+00
244	.0000E+00	.0000E+00	.0000E+00	.0000E+00
	.1200E+00	.1200E+00	.1200E+00	.1200E+00
245	.0000E+00	.0000E+00	.0000E+00	.0000E+00
	.1200E+00	.1200E+00	.1200E+00	.1200E+00
246	.0000E+00	.0000E+00	.0000E+00	.0000E+00
	.1200E+00	.1200E+00	.1200E+00	.1200E+00

========== I M A G E S 3 D ==========
= Copyright (c) 1984 Celestial Software Inc. =
==========

SOLVE DISPLACEMENTS Version 2.0 07/01/90

L O A D C A S E 2

LIVE LOAD, L - OVERBURDEN PRESSURE

Plate/Temp Plate/Pressure Plate/Lat. load	Node1 Node1 Side	Node2 Node2 Dir.	Node3 Node3 Node1	Node4 Node4 Node2
247	.0000E+00	.0000E+00	.0000E+00	.0000E+00
	.1200E+00	.1200E+00	.1200E+00	.1200E+00

========== I M A G E S 3 D ==========
= Copyright (c) 1984 Celestial Software Inc. =
==========

SOLVE DISPLACEMENTS Version 2.0 07/01/90

L O A D C A S E 3

LATERAL EARTH PRESSURE

GRAVITY LOADING

Direction	Gravity Factor	Load Factor
X	.0000E+00	.1000E+01
Y	.0000E+00	.1000E+01
Z	.0000E+00	.1000E+01

INERTIA LOADING

Direction	Translational Accel.	Rotational Accel.	Rotational Velocity	Origin
X	.0000E+00	.0000E+00	.0000E+00	.0000E+00
Y	.0000E+00	.0000E+00	.0000E+00	.0000E+00
Z	.0000E+00	.0000E+00	.0000E+00	.0000E+00

Gravity Acceleration = .3864E+03

REFERENCE TEMPERATURE = .0000E+00

PLATE TEMPERATURES/PRESSURES

Plate/Temp Plate/Pressure Plate/Lat. load	Node1 Node1 Side	Node2 Node2 Dir.	Node3 Node3 Node1	Node4 Node4 Node2
1	.0000E+00	.0000E+00	.0000E+00	.0000E+00
	.2470E+01	.2470E+01	.2258E+01	.2258E+01
2	.0000E+00	.0000E+00	.0000E+00	.0000E+00
	.2470E+01	.2470E+01	.2258E+01	.2258E+01
3	.0000E+00	.0000E+00	.0000E+00	.0000E+00
	.2470E+01	.2470E+01	.2258E+01	.2258E+01
4	.0000E+00	.0000E+00	.0000E+00	.0000E+00
	.2470E+01	.2470E+01	.2258E+01	.2258E+01
5	.0000E+00	.0000E+00	.0000E+00	.0000E+00
	.2470E+01	.2470E+01	.2258E+01	.2258E+01
6	.0000E+00	.0000E+00	.0000E+00	.0000E+00
	.2470E+01	.2470E+01	.2258E+01	.2258E+01

========== I M A G E S 3 D ==========
= Copyright (c) 1984 Celestial Software Inc. =
==========

SOLVE DISPLACEMENTS Version 2.0 07/01/90

L O A D C A S E 3

LATERAL EARTH PRESSURE

Plate/Temp Plate/Pressure Plate/Lat. load	Node1 Node1 Side	Node2 Node2 Dir.	Node3 Node3 Node1	Node4 Node4 Node2
7	.0000E+00	.0000E+00	.0000E+00	.0000E+00
	.2470E+01	.2470E+01	.2258E+01	.2258E+01
8	.0000E+00	.0000E+00	.0000E+00	.0000E+00
	.2470E+01	.2470E+01	.2258E+01	.2258E+01
9	.0000E+00	.0000E+00	.0000E+00	.0000E+00
	.2470E+01	.2470E+01	.2258E+01	.2258E+01
10	.0000E+00	.0000E+00	.0000E+00	.0000E+00
	.2470E+01	.2470E+01	.2258E+01	.2258E+01
11	.0000E+00	.0000E+00	.0000E+00	.0000E+00
	.2470E+01	.2470E+01	.2258E+01	.2258E+01
12	.0000E+00	.0000E+00	.0000E+00	.0000E+00
	.2470E+01	.2470E+01	.2258E+01	.2258E+01
13	.0000E+00	.0000E+00	.0000E+00	.0000E+00
	.2470E+01	.2470E+01	.2258E+01	.2258E+01
14	.0000E+00	.0000E+00	.0000E+00	.0000E+00
	.2470E+01	.2470E+01	.2258E+01	.2258E+01
15	.0000E+00	.0000E+00	.0000E+00	.0000E+00
	.2470E+01	.2470E+01	.2258E+01	.2258E+01
16	.0000E+00	.0000E+00	.0000E+00	.0000E+00
	.2470E+01	.2470E+01	.2258E+01	.2258E+01
17	.0000E+00	.0000E+00	.0000E+00	.0000E+00
	.2470E+01	.2470E+01	.2258E+01	.2258E+01
18	.0000E+00	.0000E+00	.0000E+00	.0000E+00
	.2470E+01	.2470E+01	.2258E+01	.2258E+01
19	.0000E+00	.0000E+00	.0000E+00	.0000E+00
	.2470E+01	.2470E+01	.2258E+01	.2258E+01
20	.0000E+00	.0000E+00	.0000E+00	.0000E+00
	.2258E+01	.2258E+01	.2045E+01	.2045E+01
21	.0000E+00	.0000E+00	.0000E+00	.0000E+00
	.2258E+01	.2258E+01	.2045E+01	.2045E+01
22	.0000E+00	.0000E+00	.0000E+00	.0000E+00
	.2258E+01	.2258E+01	.2045E+01	.2045E+01
23	.0000E+00	.0000E+00	.0000E+00	.0000E+00
	.2258E+01	.2258E+01	.2045E+01	.2045E+01
24	.0000E+00	.0000E+00	.0000E+00	.0000E+00
	.2258E+01	.2258E+01	.2045E+01	.2045E+01
25	.0000E+00	.0000E+00	.0000E+00	.0000E+00
	.2258E+01	.2258E+01	.2045E+01	.2045E+01
26	.0000E+00	.0000E+00	.0000E+00	.0000E+00
	.2258E+01	.2258E+01	.2045E+01	.2045E+01

I M A G E S 3 D

= Copyright (c) 1984 Celestial Software Inc. =

SOLVE DISPLACEMENTS Version 2.0 07/01/90

L O A D C A S E 3

LATERAL EARTH PRESSURE

Plate/Temp Plate/Pressure Plate/Lat. load	Node1 Node1 Side	Node2 Node2 Dir.	Node3 Node3 Node1	Node4 Node4 Node2
27	.0000E+00	.0000E+00	.0000E+00	.0000E+00
	.2258E+01	.2258E+01	.2045E+01	.2045E+01
28	.0000E+00	.0000E+00	.0000E+00	.0000E+00
	.2258E+01	.2258E+01	.2045E+01	.2045E+01
29	.0000E+00	.0000E+00	.0000E+00	.0000E+00
	.2258E+01	.2258E+01	.2045E+01	.2045E+01
30	.0000E+00	.0000E+00	.0000E+00	.0000E+00
	.2258E+01	.2258E+01	.2045E+01	.2045E+01
31	.0000E+00	.0000E+00	.0000E+00	.0000E+00
	.2258E+01	.2258E+01	.2045E+01	.2045E+01
32	.0000E+00	.0000E+00	.0000E+00	.0000E+00
	.2258E+01	.2258E+01	.2045E+01	.2045E+01
33	.0000E+00	.0000E+00	.0000E+00	.0000E+00
	.2258E+01	.2258E+01	.2045E+01	.2045E+01
34	.0000E+00	.0000E+00	.0000E+00	.0000E+00
	.2258E+01	.2258E+01	.2045E+01	.2045E+01
35	.0000E+00	.0000E+00	.0000E+00	.0000E+00
	.2258E+01	.2258E+01	.2045E+01	.2045E+01
36	.0000E+00	.0000E+00	.0000E+00	.0000E+00
	.2258E+01	.2258E+01	.2045E+01	.2045E+01
37	.0000E+00	.0000E+00	.0000E+00	.0000E+00
	.2258E+01	.2258E+01	.2045E+01	.2045E+01
38	.0000E+00	.0000E+00	.0000E+00	.0000E+00
	.2258E+01	.2258E+01	.2045E+01	.2045E+01
39	.0000E+00	.0000E+00	.0000E+00	.0000E+00
	.2045E+01	.2045E+01	.1833E+01	.1833E+01
40	.0000E+00	.0000E+00	.0000E+00	.0000E+00
	.2045E+01	.2045E+01	.1833E+01	.1833E+01
41	.0000E+00	.0000E+00	.0000E+00	.0000E+00
	.2045E+01	.2045E+01	.1833E+01	.1833E+01
42	.0000E+00	.0000E+00	.0000E+00	.0000E+00
	.2045E+01	.2045E+01	.1833E+01	.1833E+01
43	.0000E+00	.0000E+00	.0000E+00	.0000E+00
	.2045E+01	.2045E+01	.1833E+01	.1833E+01
44	.0000E+00	.0000E+00	.0000E+00	.0000E+00
	.2045E+01	.2045E+01	.1833E+01	.1833E+01
45	.0000E+00	.0000E+00	.0000E+00	.0000E+00
	.2045E+01	.2045E+01	.1833E+01	.1833E+01
46	.0000E+00	.0000E+00	.0000E+00	.0000E+00
	.2045E+01	.2045E+01	.1833E+01	.1833E+01

I M A G E S 3 D

= Copyright (c) 1984 Celestial Software Inc. =

SOLVE DISPLACEMENTS Version 2.0 07/01/90

L O A D C A S E 3

LATERAL EARTH PRESSURE

Plate/Temp Plate/Pressure Plate/Lat. load	Node1 Node1 Side	Node2 Node2 Dir.	Node3 Node3 Node1	Node4 Node4 Node2
47	.0000E+00	.0000E+00	.0000E+00	.0000E+00
	.2045E+01	.2045E+01	.1833E+01	.1833E+01
48	.0000E+00	.0000E+00	.0000E+00	.0000E+00
	.2045E+01	.2045E+01	.1833E+01	.1833E+01
49	.0000E+00	.0000E+00	.0000E+00	.0000E+00
	.2045E+01	.2045E+01	.1833E+01	.1833E+01
50	.0000E+00	.0000E+00	.0000E+00	.0000E+00
	.2045E+01	.2045E+01	.1833E+01	.1833E+01
51	.0000E+00	.0000E+00	.0000E+00	.0000E+00
	.2045E+01	.2045E+01	.1833E+01	.1833E+01
52	.0000E+00	.0000E+00	.0000E+00	.0000E+00
	.2045E+01	.2045E+01	.1833E+01	.1833E+01
53	.0000E+00	.0000E+00	.0000E+00	.0000E+00
	.2045E+01	.2045E+01	.1833E+01	.1833E+01
54	.0000E+00	.0000E+00	.0000E+00	.0000E+00
	.2045E+01	.2045E+01	.1833E+01	.1833E+01
55	.0000E+00	.0000E+00	.0000E+00	.0000E+00
	.2045E+01	.2045E+01	.1833E+01	.1833E+01
56	.0000E+00	.0000E+00	.0000E+00	.0000E+00
	.2045E+01	.2045E+01	.1833E+01	.1833E+01
57	.0000E+00	.0000E+00	.0000E+00	.0000E+00
	.2045E+01	.2045E+01	.1833E+01	.1833E+01
58	.0000E+00	.0000E+00	.0000E+00	.0000E+00
	.1833E+01	.1833E+01	.1620E+01	.1620E+01
59	.0000E+00	.0000E+00	.0000E+00	.0000E+00
	.1833E+01	.1833E+01	.1620E+01	.1620E+01
60	.0000E+00	.0000E+00	.0000E+00	.0000E+00
	.1833E+01	.1833E+01	.1620E+01	.1620E+01
61	.0000E+00	.0000E+00	.0000E+00	.0000E+00
	.1833E+01	.1833E+01	.1620E+01	.1620E+01
62	.0000E+00	.0000E+00	.0000E+00	.0000E+00
	.1833E+01	.1833E+01	.1620E+01	.1620E+01
63	.0000E+00	.0000E+00	.0000E+00	.0000E+00
	.1833E+01	.1833E+01	.1620E+01	.1620E+01
64	.0000E+00	.0000E+00	.0000E+00	.0000E+00
	.1833E+01	.1833E+01	.1620E+01	.1620E+01
65	.0000E+00	.0000E+00	.0000E+00	.0000E+00
	.1833E+01	.1833E+01	.1620E+01	.1620E+01
66	.0000E+00	.0000E+00	.0000E+00	.0000E+00
	.1833E+01	.1833E+01	.1620E+01	.1620E+01

LOGAPRINT

========== I M A G E S 3 D ==========
= Copyright (c) 1984 Celestial Software Inc. =
==========

SOLVE DISPLACEMENTS Version 2.0 07/01/90

L O A D C A S E 3

LATERAL EARTH PRESSURE

Plate/Temp Plate/Pressure Plate/Lat. load	Node1 Node1 Side	Node2 Node2 Dir.	Node3 Node3 Node1	Node4 Node4 Node2
67	.0000E+00	.0000E+00	.0000E+00	.0000E+00
	.1833E+01	.1833E+01	.1620E+01	.1620E+01
68	.0000E+00	.0000E+00	.0000E+00	.0000E+00
	.1833E+01	.1833E+01	.1620E+01	.1620E+01
69	.0000E+00	.0000E+00	.0000E+00	.0000E+00
	.1833E+01	.1833E+01	.1620E+01	.1620E+01
70	.0000E+00	.0000E+00	.0000E+00	.0000E+00
	.1833E+01	.1833E+01	.1620E+01	.1620E+01
71	.0000E+00	.0000E+00	.0000E+00	.0000E+00
	.1833E+01	.1833E+01	.1620E+01	.1620E+01
72	.0000E+00	.0000E+00	.0000E+00	.0000E+00
	.1833E+01	.1833E+01	.1620E+01	.1620E+01
73	.0000E+00	.0000E+00	.0000E+00	.0000E+00
	.1833E+01	.1833E+01	.1620E+01	.1620E+01
74	.0000E+00	.0000E+00	.0000E+00	.0000E+00
	.1833E+01	.1833E+01	.1620E+01	.1620E+01
75	.0000E+00	.0000E+00	.0000E+00	.0000E+00
	.1833E+01	.1833E+01	.1620E+01	.1620E+01
76	.0000E+00	.0000E+00	.0000E+00	.0000E+00
	.1833E+01	.1833E+01	.1620E+01	.1620E+01
77	.0000E+00	.0000E+00	.0000E+00	.0000E+00
	.1620E+01	.1620E+01	.1461E+01	.1461E+01
78	.0000E+00	.0000E+00	.0000E+00	.0000E+00
	.1620E+01	.1620E+01	.1461E+01	.1461E+01
79	.0000E+00	.0000E+00	.0000E+00	.0000E+00
	.1620E+01	.1620E+01	.1461E+01	.1461E+01
80	.0000E+00	.0000E+00	.0000E+00	.0000E+00
	.1620E+01	.1620E+01	.1461E+01	.1461E+01
81	.0000E+00	.0000E+00	.0000E+00	.0000E+00
	.1620E+01	.1620E+01	.1461E+01	.1461E+01
82	.0000E+00	.0000E+00	.0000E+00	.0000E+00
	.1620E+01	.1620E+01	.1461E+01	.1461E+01
83	.0000E+00	.0000E+00	.0000E+00	.0000E+00
	.1620E+01	.1620E+01	.1461E+01	.1461E+01
84	.0000E+00	.0000E+00	.0000E+00	.0000E+00
	.1620E+01	.1620E+01	.1461E+01	.1461E+01
85	.0000E+00	.0000E+00	.0000E+00	.0000E+00
	.1620E+01	.1620E+01	.1461E+01	.1461E+01
86	.0000E+00	.0000E+00	.0000E+00	.0000E+00
	.1620E+01	.1620E+01	.1461E+01	.1461E+01

========== I M A G E S 3 D ==========
= Copyright (c) 1984 Celestial Software Inc. =
==========

SOLVE DISPLACEMENTS Version 2.0 07/01/90

L O A D C A S E 3

LATERAL EARTH PRESSURE

Plate/Temp Plate/Pressure Plate/Lat. load	Node1 Node1 Side	Node2 Node2 Dir.	Node3 Node3 Node1	Node4 Node4 Node2
87	.0000E+00	.0000E+00	.0000E+00	.0000E+00
	.1620E+01	.1620E+01	.1461E+01	.1461E+01
88	.0000E+00	.0000E+00	.0000E+00	.0000E+00
	.1620E+01	.1620E+01	.1461E+01	.1461E+01
89	.0000E+00	.0000E+00	.0000E+00	.0000E+00
	.1620E+01	.1620E+01	.1461E+01	.1461E+01
90	.0000E+00	.0000E+00	.0000E+00	.0000E+00
	.1620E+01	.1620E+01	.1461E+01	.1461E+01
91	.0000E+00	.0000E+00	.0000E+00	.0000E+00
	.1620E+01	.1620E+01	.1461E+01	.1461E+01
92	.0000E+00	.0000E+00	.0000E+00	.0000E+00
	.1620E+01	.1620E+01	.1461E+01	.1461E+01
93	.0000E+00	.0000E+00	.0000E+00	.0000E+00
	.1620E+01	.1620E+01	.1461E+01	.1461E+01
94	.0000E+00	.0000E+00	.0000E+00	.0000E+00
	.1620E+01	.1620E+01	.1461E+01	.1461E+01
95	.0000E+00	.0000E+00	.0000E+00	.0000E+00
	.1620E+01	.1620E+01	.1461E+01	.1461E+01
96	.0000E+00	.0000E+00	.0000E+00	.0000E+00
	.1461E+01	.1461E+01	.1328E+01	.1328E+01
97	.0000E+00	.0000E+00	.0000E+00	.0000E+00
	.1461E+01	.1461E+01	.1328E+01	.1328E+01
98	.0000E+00	.0000E+00	.0000E+00	.0000E+00
	.1461E+01	.1461E+01	.1328E+01	.1328E+01
99	.0000E+00	.0000E+00	.0000E+00	.0000E+00
	.1461E+01	.1461E+01	.1328E+01	.1328E+01
100	.0000E+00	.0000E+00	.0000E+00	.0000E+00
	.1461E+01	.1461E+01	.1328E+01	.1328E+01
101	.0000E+00	.0000E+00	.0000E+00	.0000E+00
	.1461E+01	.1461E+01	.1328E+01	.1328E+01
102	.0000E+00	.0000E+00	.0000E+00	.0000E+00
	.1461E+01	.1461E+01	.1328E+01	.1328E+01
103	.0000E+00	.0000E+00	.0000E+00	.0000E+00
	.1461E+01	.1461E+01	.1328E+01	.1328E+01
104	.0000E+00	.0000E+00	.0000E+00	.0000E+00
	.1461E+01	.1461E+01	.1328E+01	.1328E+01
105	.0000E+00	.0000E+00	.0000E+00	.0000E+00
	.1461E+01	.1461E+01	.1328E+01	.1328E+01
106	.0000E+00	.0000E+00	.0000E+00	.0000E+00
	.1461E+01	.1461E+01	.1328E+01	.1328E+01

LOGAPRINT

========== I M A G E S 3 D ==========
= Copyright (c) 1984 Celestial Software Inc. =
==========

SOLVE DISPLACEMENTS Version 2.0 07/01/90

L O A D C A S E 3

LATERAL EARTH PRESSURE

Plate/Temp Plate/Pressure Plate/Lat. load	Node1 Node1 Side	Node2 Node2 Dir.	Node3 Node3 Node1	Node4 Node4 Node2
107	.0000E+00	.0000E+00	.0000E+00	.0000E+00
	.1461E+01	.1461E+01	.1328E+01	.1328E+01
108	.0000E+00	.0000E+00	.0000E+00	.0000E+00
	.1461E+01	.1461E+01	.1328E+01	.1328E+01
109	.0000E+00	.0000E+00	.0000E+00	.0000E+00
	.1461E+01	.1461E+01	.1328E+01	.1328E+01
110	.0000E+00	.0000E+00	.0000E+00	.0000E+00
	.1461E+01	.1461E+01	.1328E+01	.1328E+01
111	.0000E+00	.0000E+00	.0000E+00	.0000E+00
	.1461E+01	.1461E+01	.1328E+01	.1328E+01
112	.0000E+00	.0000E+00	.0000E+00	.0000E+00
	.1461E+01	.1461E+01	.1328E+01	.1328E+01
113	.0000E+00	.0000E+00	.0000E+00	.0000E+00
	.1461E+01	.1461E+01	.1328E+01	.1328E+01
114	.0000E+00	.0000E+00	.0000E+00	.0000E+00
	.1461E+01	.1461E+01	.1328E+01	.1328E+01
115	.0000E+00	.0000E+00	.0000E+00	.0000E+00
	.1328E+01	.1328E+01	.1115E+01	.1115E+01
116	.0000E+00	.0000E+00	.0000E+00	.0000E+00
	.1328E+01	.1328E+01	.1115E+01	.1115E+01
117	.0000E+00	.0000E+00	.0000E+00	.0000E+00
	.1328E+01	.1328E+01	.1115E+01	.1115E+01
118	.0000E+00	.0000E+00	.0000E+00	.0000E+00
	.1328E+01	.1328E+01	.1115E+01	.1115E+01
119	.0000E+00	.0000E+00	.0000E+00	.0000E+00
	.1328E+01	.1328E+01	.1115E+01	.1115E+01
120	.0000E+00	.0000E+00	.0000E+00	.0000E+00
	.1328E+01	.1328E+01	.1115E+01	.1115E+01
121	.0000E+00	.0000E+00	.0000E+00	.0000E+00
	.1328E+01	.1328E+01	.1115E+01	.1115E+01
122	.0000E+00	.0000E+00	.0000E+00	.0000E+00
	.1328E+01	.1328E+01	.1115E+01	.1115E+01
123	.0000E+00	.0000E+00	.0000E+00	.0000E+00
	.1328E+01	.1328E+01	.1115E+01	.1115E+01
124	.0000E+00	.0000E+00	.0000E+00	.0000E+00
	.1328E+01	.1328E+01	.1115E+01	.1115E+01
125	.0000E+00	.0000E+00	.0000E+00	.0000E+00
	.1328E+01	.1328E+01	.1115E+01	.1115E+01
126	.0000E+00	.0000E+00	.0000E+00	.0000E+00
	.1328E+01	.1328E+01	.1115E+01	.1115E+01

========== I M A G E S 3 D ==========
= Copyright (c) 1984 Celestial Software Inc. =
==========

SOLVE DISPLACEMENTS Version 2.0 07/01/90

L O A D C A S E 3

LATERAL EARTH PRESSURE

Plate/Temp Plate/Pressure Plate/Lat. load	Node1 Node1 Side	Node2 Node2 Dir.	Node3 Node3 Node1	Node4 Node4 Node2
127	.0000E+00	.0000E+00	.0000E+00	.0000E+00
	.1328E+01	.1328E+01	.1115E+01	.1115E+01
128	.0000E+00	.0000E+00	.0000E+00	.0000E+00
	.1328E+01	.1328E+01	.1115E+01	.1115E+01
129	.0000E+00	.0000E+00	.0000E+00	.0000E+00
	.1328E+01	.1328E+01	.1115E+01	.1115E+01
130	.0000E+00	.0000E+00	.0000E+00	.0000E+00
	.1328E+01	.1328E+01	.1115E+01	.1115E+01
131	.0000E+00	.0000E+00	.0000E+00	.0000E+00
	.1328E+01	.1328E+01	.1115E+01	.1115E+01
132	.0000E+00	.0000E+00	.0000E+00	.0000E+00
	.1328E+01	.1328E+01	.1115E+01	.1115E+01
133	.0000E+00	.0000E+00	.0000E+00	.0000E+00
	.1328E+01	.1328E+01	.1115E+01	.1115E+01
134	.0000E+00	.0000E+00	.0000E+00	.0000E+00
	.1115E+01	.1115E+01	.9794E+00	.9794E+00
135	.0000E+00	.0000E+00	.0000E+00	.0000E+00
	.1115E+01	.1115E+01	.9794E+00	.9794E+00
136	.0000E+00	.0000E+00	.0000E+00	.0000E+00
	.1115E+01	.1115E+01	.9794E+00	.9794E+00
137	.0000E+00	.0000E+00	.0000E+00	.0000E+00
	.1115E+01	.1115E+01	.9794E+00	.9794E+00
138	.0000E+00	.0000E+00	.0000E+00	.0000E+00
	.1115E+01	.1115E+01	.9794E+00	.9794E+00
139	.0000E+00	.0000E+00	.0000E+00	.0000E+00
	.1115E+01	.1115E+01	.9794E+00	.9794E+00
140	.0000E+00	.0000E+00	.0000E+00	.0000E+00
	.1115E+01	.1115E+01	.9794E+00	.9794E+00
141	.0000E+00	.0000E+00	.0000E+00	.0000E+00
	.1115E+01	.1115E+01	.9794E+00	.9794E+00
142	.0000E+00	.0000E+00	.0000E+00	.0000E+00
	.1115E+01	.1115E+01	.9794E+00	.9794E+00
143	.0000E+00	.0000E+00	.0000E+00	.0000E+00
	.1115E+01	.1115E+01	.9794E+00	.9794E+00
144	.0000E+00	.0000E+00	.0000E+00	.0000E+00
	.1115E+01	.1115E+01	.9794E+00	.9794E+00
145	.0000E+00	.0000E+00	.0000E+00	.0000E+00
	.1115E+01	.1115E+01	.9794E+00	.9794E+00
146	.0000E+00	.0000E+00	.0000E+00	.0000E+00
	.1115E+01	.1115E+01	.9794E+00	.9794E+00

========== I M A G E S 3 D ==========
= Copyright (c) 1984 Celestial Software Inc. =
==========

SOLVE DISPLACEMENTS Version 2.0 07/01/90

L O A D C A S E 3

LATERAL EARTH PRESSURE

Plate/Temp Plate/Pressure Plate/Lat. load	Node1 Node1 Side	Node2 Node2 Dir.	Node3 Node3 Node1	Node4 Node4 Node2
147	.0000E+00	.0000E+00	.0000E+00	.0000E+00
	.1115E+01	.1115E+01	.9794E+00	.9794E+00
148	.0000E+00	.0000E+00	.0000E+00	.0000E+00
	.1115E+01	.1115E+01	.9794E+00	.9794E+00
149	.0000E+00	.0000E+00	.0000E+00	.0000E+00
	.1115E+01	.1115E+01	.9794E+00	.9794E+00
150	.0000E+00	.0000E+00	.0000E+00	.0000E+00
	.1115E+01	.1115E+01	.9794E+00	.9794E+00
151	.0000E+00	.0000E+00	.0000E+00	.0000E+00
	.1115E+01	.1115E+01	.8765E+00	.9794E+00
152	.0000E+00	.0000E+00	.0000E+00	.0000E+00
	.1115E+01	.1115E+01	.8765E+00	.8765E+00
153	.0000E+00	.0000E+00	.0000E+00	.0000E+00
	.9794E+00	.9794E+00	.7702E+00	.7702E+00
154	.0000E+00	.0000E+00	.0000E+00	.0000E+00
	.9794E+00	.9794E+00	.7702E+00	.7702E+00
155	.0000E+00	.0000E+00	.0000E+00	.0000E+00
	.9794E+00	.9794E+00	.7702E+00	.7702E+00
156	.0000E+00	.0000E+00	.0000E+00	.0000E+00
	.9794E+00	.9794E+00	.7702E+00	.7702E+00
157	.0000E+00	.0000E+00	.0000E+00	.0000E+00
	.9794E+00	.9794E+00	.7702E+00	.7702E+00
158	.0000E+00	.0000E+00	.0000E+00	.0000E+00
	.9794E+00	.9794E+00	.7702E+00	.7702E+00
159	.0000E+00	.0000E+00	.0000E+00	.0000E+00
	.9794E+00	.9794E+00	.7702E+00	.7702E+00
160	.0000E+00	.0000E+00	.0000E+00	.0000E+00
	.9794E+00	.9794E+00	.7702E+00	.7702E+00
161	.0000E+00	.0000E+00	.0000E+00	.0000E+00
	.9794E+00	.9794E+00	.7702E+00	.7702E+00
162	.0000E+00	.0000E+00	.0000E+00	.0000E+00
	.9794E+00	.9794E+00	.7702E+00	.7702E+00
163	.0000E+00	.0000E+00	.0000E+00	.0000E+00
	.9794E+00	.9794E+00	.7702E+00	.7702E+00
164	.0000E+00	.0000E+00	.0000E+00	.0000E+00
	.9794E+00	.9794E+00	.7702E+00	.7702E+00
165	.0000E+00	.0000E+00	.0000E+00	.0000E+00
	.9794E+00	.9794E+00	.7702E+00	.7702E+00
166	.0000E+00	.0000E+00	.0000E+00	.0000E+00
	.9794E+00	.9794E+00	.7702E+00	.7702E+00

========== I M A G E S 3 D ==========
= Copyright (c) 1984 Celestial Software Inc. =
==========

SOLVE DISPLACEMENTS Version 2.0 07/01/90

L O A D C A S E 3

LATERAL EARTH PRESSURE

Plate/Temp Plate/Pressure Plate/Lat. load	Node1 Node1 Side	Node2 Node2 Dir.	Node3 Node3 Node1	Node4 Node4 Node2
167	.0000E+00	.0000E+00	.0000E+00	.0000E+00
	.9794E+00	.9794E+00	.7702E+00	.7702E+00
168	.0000E+00	.0000E+00	.0000E+00	.0000E+00
	.9794E+00	.9794E+00	.7702E+00	.7702E+00
169	.0000E+00	.0000E+00	.0000E+00	.0000E+00
	.9794E+00	.9794E+00	.7702E+00	.7702E+00
170	.0000E+00	.0000E+00	.0000E+00	.0000E+00
	.9794E+00	.8765E+00	.7702E+00	.7702E+00
171	.0000E+00	.0000E+00	.0000E+00	.0000E+00
	.8765E+00	.8765E+00	.7702E+00	.7702E+00
172	.0000E+00	.0000E+00	.0000E+00	.0000E+00
	.7702E+00	.7702E+00	.5577E+00	.5577E+00
173	.0000E+00	.0000E+00	.0000E+00	.0000E+00
	.7702E+00	.7702E+00	.5577E+00	.5577E+00
174	.0000E+00	.0000E+00	.0000E+00	.0000E+00
	.7702E+00	.7702E+00	.5577E+00	.5577E+00
175	.0000E+00	.0000E+00	.0000E+00	.0000E+00
	.7702E+00	.7702E+00	.5577E+00	.5577E+00
176	.0000E+00	.0000E+00	.0000E+00	.0000E+00
	.7702E+00	.7702E+00	.5577E+00	.5577E+00
177	.0000E+00	.0000E+00	.0000E+00	.0000E+00
	.7702E+00	.7702E+00	.5577E+00	.5577E+00
178	.0000E+00	.0000E+00	.0000E+00	.0000E+00
	.7702E+00	.7702E+00	.5577E+00	.5577E+00
179	.0000E+00	.0000E+00	.0000E+00	.0000E+00
	.7702E+00	.7702E+00	.5577E+00	.5577E+00
180	.0000E+00	.0000E+00	.0000E+00	.0000E+00
	.7702E+00	.7702E+00	.5577E+00	.5577E+00
181	.0000E+00	.0000E+00	.0000E+00	.0000E+00
	.7702E+00	.7702E+00	.5577E+00	.5577E+00
182	.0000E+00	.0000E+00	.0000E+00	.0000E+00
	.7702E+00	.7702E+00	.5577E+00	.5577E+00
183	.0000E+00	.0000E+00	.0000E+00	.0000E+00
	.7702E+00	.7702E+00	.5577E+00	.5577E+00
184	.0000E+00	.0000E+00	.0000E+00	.0000E+00
	.7702E+00	.7702E+00	.5577E+00	.5577E+00
185	.0000E+00	.0000E+00	.0000E+00	.0000E+00
	.7702E+00	.7702E+00	.5577E+00	.5577E+00
186	.0000E+00	.0000E+00	.0000E+00	.0000E+00
	.7702E+00	.7702E+00	.5577E+00	.5577E+00

========== I M A G E S 3 D ==========
= Copyright (c) 1984 Celestial Software Inc. =
==========

SOLVE DISPLACEMENTS Version 2.0 07/01/90

L O A D C A S E 3

LATERAL EARTH PRESSURE

Plate/Temp Plate/Pressure Plate/Lat. load	Node1 Node1 Side	Node2 Node2 Dir.	Node3 Node3 Node1	Node4 Node4 Node2
187	.0000E+00	.0000E+00	.0000E+00	.0000E+00
	.7702E+00	.7702E+00	.5577E+00	.5577E+00
188	.0000E+00	.0000E+00	.0000E+00	.0000E+00
	.7702E+00	.7702E+00	.5577E+00	.5577E+00
189	.0000E+00	.0000E+00	.0000E+00	.0000E+00
	.7702E+00	.7702E+00	.5577E+00	.5577E+00
190	.0000E+00	.0000E+00	.0000E+00	.0000E+00
	.7702E+00	.7702E+00	.5577E+00	.5577E+00
191	.0000E+00	.0000E+00	.0000E+00	.0000E+00
	.5577E+00	.5577E+00	.4249E+00	.4249E+00
192	.0000E+00	.0000E+00	.0000E+00	.0000E+00
	.5577E+00	.5577E+00	.4249E+00	.4249E+00
193	.0000E+00	.0000E+00	.0000E+00	.0000E+00
	.5577E+00	.5577E+00	.4249E+00	.4249E+00
194	.0000E+00	.0000E+00	.0000E+00	.0000E+00
	.5577E+00	.5577E+00	.4249E+00	.4249E+00
195	.0000E+00	.0000E+00	.0000E+00	.0000E+00
	.5577E+00	.5577E+00	.4249E+00	.4249E+00
196	.0000E+00	.0000E+00	.0000E+00	.0000E+00
	.5577E+00	.5577E+00	.4249E+00	.4249E+00
197	.0000E+00	.0000E+00	.0000E+00	.0000E+00
	.5577E+00	.5577E+00	.4249E+00	.4249E+00
198	.0000E+00	.0000E+00	.0000E+00	.0000E+00
	.5577E+00	.5577E+00	.4249E+00	.4249E+00
199	.0000E+00	.0000E+00	.0000E+00	.0000E+00
	.5577E+00	.5577E+00	.4249E+00	.4249E+00
200	.0000E+00	.0000E+00	.0000E+00	.0000E+00
	.5577E+00	.5577E+00	.4249E+00	.4249E+00
201	.0000E+00	.0000E+00	.0000E+00	.0000E+00
	.5577E+00	.5577E+00	.4249E+00	.4249E+00
202	.0000E+00	.0000E+00	.0000E+00	.0000E+00
	.5577E+00	.5577E+00	.4249E+00	.4249E+00
203	.0000E+00	.0000E+00	.0000E+00	.0000E+00
	.5577E+00	.5577E+00	.4249E+00	.4249E+00
204	.0000E+00	.0000E+00	.0000E+00	.0000E+00
	.5577E+00	.5577E+00	.4249E+00	.4249E+00
205	.0000E+00	.0000E+00	.0000E+00	.0000E+00
	.5577E+00	.5577E+00	.4249E+00	.4249E+00
206	.0000E+00	.0000E+00	.0000E+00	.0000E+00
	.5577E+00	.5577E+00	.4249E+00	.4249E+00

========== I M A G E S 3 D ==========
= Copyright (c) 1984 Celestial Software Inc. =
==========

SOLVE DISPLACEMENTS Version 2.0 07/01/90

L O A D C A S E 3

LATERAL EARTH PRESSURE

Plate/Temp Plate/Pressure Plate/Lat. load	Node1 Node1 Side	Node2 Node2 Dir.	Node3 Node3 Node1	Node4 Node4 Node2
207	.0000E+00	.0000E+00	.0000E+00	.0000E+00
	.5577E+00	.5577E+00	.4249E+00	.4249E+00
208	.0000E+00	.0000E+00	.0000E+00	.0000E+00
	.5577E+00	.5577E+00	.4249E+00	.4249E+00
209	.0000E+00	.0000E+00	.0000E+00	.0000E+00
	.5577E+00	.5577E+00	.4249E+00	.4249E+00
210	.0000E+00	.0000E+00	.0000E+00	.0000E+00
	.4249E+00	.4249E+00	.2125E+00	.2125E+00
211	.0000E+00	.0000E+00	.0000E+00	.0000E+00
	.4249E+00	.4249E+00	.2125E+00	.2125E+00
212	.0000E+00	.0000E+00	.0000E+00	.0000E+00
	.4249E+00	.4249E+00	.2125E+00	.2125E+00
213	.0000E+00	.0000E+00	.0000E+00	.0000E+00
	.4249E+00	.4249E+00	.2125E+00	.2125E+00
214	.0000E+00	.0000E+00	.0000E+00	.0000E+00
	.4249E+00	.4249E+00	.2125E+00	.2125E+00
215	.0000E+00	.0000E+00	.0000E+00	.0000E+00
	.4249E+00	.4249E+00	.2125E+00	.2125E+00
216	.0000E+00	.0000E+00	.0000E+00	.0000E+00
	.4249E+00	.4249E+00	.2125E+00	.2125E+00
217	.0000E+00	.0000E+00	.0000E+00	.0000E+00
	.4249E+00	.4249E+00	.2125E+00	.2125E+00
218	.0000E+00	.0000E+00	.0000E+00	.0000E+00
	.4249E+00	.4249E+00	.2125E+00	.2125E+00
219	.0000E+00	.0000E+00	.0000E+00	.0000E+00
	.4249E+00	.4249E+00	.2125E+00	.2125E+00
220	.0000E+00	.0000E+00	.0000E+00	.0000E+00
	.4249E+00	.4249E+00	.2125E+00	.2125E+00
221	.0000E+00	.0000E+00	.0000E+00	.0000E+00
	.4249E+00	.4249E+00	.2125E+00	.2125E+00
222	.0000E+00	.0000E+00	.0000E+00	.0000E+00
	.4249E+00	.4249E+00	.2125E+00	.2125E+00
223	.0000E+00	.0000E+00	.0000E+00	.0000E+00
	.4249E+00	.4249E+00	.2125E+00	.2125E+00
224	.0000E+00	.0000E+00	.0000E+00	.0000E+00
	.4249E+00	.4249E+00	.2125E+00	.2125E+00
225	.0000E+00	.0000E+00	.0000E+00	.0000E+00
	.4249E+00	.4249E+00	.2125E+00	.2125E+00
226	.0000E+00	.0000E+00	.0000E+00	.0000E+00
	.4249E+00	.4249E+00	.2125E+00	.2125E+00

========== I M A G E S 3 D ==========
= Copyright (c) 1984 Celestial Software Inc. =
==========

SOLVE DISPLACEMENTS Version 2.0 07/01/90

L O A D C A S E 3

LATERAL EARTH PRESSURE

Plate/Temp Plate/Pressure Plate/Lat. load	Node1 Node1 Side	Node2 Node2 Dir.	Node3 Node3 Node1	Node4 Node4 Node2
227	.0000E+00	.0000E+00	.0000E+00	.0000E+00
	.4249E+00	.4249E+00	.2125E+00	.2125E+00
228	.0000E+00	.0000E+00	.0000E+00	.0000E+00
	.4249E+00	.4249E+00	.2125E+00	.2125E+00
229	.0000E+00	.0000E+00	.0000E+00	.0000E+00
	.2125E+00	.2125E+00	-.3816E-16	-.3816E-16
230	.0000E+00	.0000E+00	.0000E+00	.0000E+00
	.2125E+00	.2125E+00	-.3816E-16	-.3816E-16
231	.0000E+00	.0000E+00	.0000E+00	.0000E+00
	.2125E+00	.2125E+00	-.3816E-16	-.3816E-16
232	.0000E+00	.0000E+00	.0000E+00	.0000E+00
	.2125E+00	.2125E+00	-.3816E-16	-.3816E-16
233	.0000E+00	.0000E+00	.0000E+00	.0000E+00
	.2125E+00	.2125E+00	-.3816E-16	-.3816E-16
234	.0000E+00	.0000E+00	.0000E+00	.0000E+00
	.2125E+00	.2125E+00	-.3816E-16	-.3816E-16
235	.0000E+00	.0000E+00	.0000E+00	.0000E+00
	.2125E+00	.2125E+00	-.3816E-16	-.3816E-16
236	.0000E+00	.0000E+00	.0000E+00	.0000E+00
	.2125E+00	.2125E+00	-.3816E-16	-.3816E-16
237	.0000E+00	.0000E+00	.0000E+00	.0000E+00
	.2125E+00	.2125E+00	-.3816E-16	-.3816E-16
238	.0000E+00	.0000E+00	.0000E+00	.0000E+00
	.2125E+00	.2125E+00	-.3816E-16	-.3816E-16
239	.0000E+00	.0000E+00	.0000E+00	.0000E+00
	.2125E+00	.2125E+00	-.3816E-16	-.3816E-16
240	.0000E+00	.0000E+00	.0000E+00	.0000E+00
	.2125E+00	.2125E+00	-.3816E-16	-.3816E-16
241	.0000E+00	.0000E+00	.0000E+00	.0000E+00
	.2125E+00	.2125E+00	-.3816E-16	-.3816E-16
242	.0000E+00	.0000E+00	.0000E+00	.0000E+00
	.2125E+00	.2125E+00	-.3816E-16	-.3816E-16
243	.0000E+00	.0000E+00	.0000E+00	.0000E+00
	.2125E+00	.2125E+00	-.3816E-16	-.3816E-16
244	.0000E+00	.0000E+00	.0000E+00	.0000E+00
	.2125E+00	.2125E+00	-.3816E-16	-.3816E-16
245	.0000E+00	.0000E+00	.0000E+00	.0000E+00
	.2125E+00	.2125E+00	-.3816E-16	-.3816E-16
246	.0000E+00	.0000E+00	.0000E+00	.0000E+00
	.2125E+00	.2125E+00	-.3816E-16	-.3816E-16

========== I M A G E S 3 D ==========
= Copyright (c) 1984 Celestial Software Inc. =
==========

SOLVE DISPLACEMENTS Version 2.0 07/01/90

L O A D C A S E 3

LATERAL EARTH PRESSURE

Plate/Temp Plate/Pressure Plate/Lat. load	Node1 Node1 Side	Node2 Node2 Dir.	Node3 Node3 Node1	Node4 Node4 Node2
247	.0000E+00	.0000E+00	.0000E+00	.0000E+00
	.2125E+00	.2125E+00	-.3816E-16	-.3816E-16

========== I M A G E S 3 D ==========
= Copyright (c) 1984 Celestial Software Inc. =
==========

SOLVE DISPLACEMENTS Version 2.0 07/01/90

L O A D C A S E 4

SEISMIC LOAD, ESS

GRAVITY LOADING

Direction	Gravity Factor	Load Factor
X	.2000E+00	.1000E+01
Y	-.1330E+00	.1000E+01
Z	.2000E+00	.1000E+01

INERTIA LOADING

Direction	Translational Accel.	Rotational Accel.	Rotational Velocity	Origin
X	.0000E+00	.0000E+00	.0000E+00	.0000E+00
Y	.0000E+00	.0000E+00	.0000E+00	.0000E+00
Z	.0000E+00	.0000E+00	.0000E+00	.0000E+00

Gravity Acceleration = .3864E+03

REFERENCE TEMPERATURE = .0000E+00

PLATE TEMPERATURES/PRESSURES

Plate/Temp Plate/Pressure Plate/Lat. load	Node1 Node1 Side	Node2 Node2 Dir.	Node3 Node3 Node1	Node4 Node4 Node2
1	.0000E+00	.0000E+00	.0000E+00	.0000E+00
	.0000E+00	.0000E+00	.2125E+00	.2125E+00
2	.0000E+00	.0000E+00	.0000E+00	.0000E+00
	.0000E+00	.0000E+00	.2125E+00	.2125E+00
3	.0000E+00	.0000E+00	.0000E+00	.0000E+00
	.0000E+00	.0000E+00	.2125E+00	.2125E+00
4	.0000E+00	.0000E+00	.0000E+00	.0000E+00
	.0000E+00	.0000E+00	.2125E+00	.2125E+00
5	.0000E+00	.0000E+00	.0000E+00	.0000E+00
	.0000E+00	.0000E+00	.2125E+00	.2125E+00
6	.0000E+00	.0000E+00	.0000E+00	.0000E+00
	.0000E+00	.0000E+00	.2125E+00	.2125E+00

========== I M A G E S 3 D ==========
= Copyright (c) 1984 Celestial Software Inc. =
==========

SOLVE DISPLACEMENTS Version 2.0 07/01/90

L O A D C A S E 4

SEISMIC LOAD, ESS

Plate/Temp Plate/Pressure Plate/Lat. load	Node1 Node1 Side	Node2 Node2 Dir.	Node3 Node3 Node1	Node4 Node4 Node2
7	.0000E+00	.0000E+00	.0000E+00	.0000E+00
	.0000E+00	.0000E+00	.2125E+00	.2125E+00
8	.0000E+00	.0000E+00	.0000E+00	.0000E+00
	.0000E+00	.0000E+00	.2125E+00	.2125E+00
9	.0000E+00	.0000E+00	.0000E+00	.0000E+00
	.0000E+00	.0000E+00	.2125E+00	.2125E+00
10	.0000E+00	.0000E+00	.0000E+00	.0000E+00
	.0000E+00	.0000E+00	.2125E+00	.2125E+00
11	.0000E+00	.0000E+00	.0000E+00	.0000E+00
	.0000E+00	.0000E+00	.2125E+00	.2125E+00
12	.0000E+00	.0000E+00	.0000E+00	.0000E+00
	.0000E+00	.0000E+00	.2125E+00	.2125E+00
13	.0000E+00	.0000E+00	.0000E+00	.0000E+00
	.0000E+00	.0000E+00	.2125E+00	.2125E+00
14	.0000E+00	.0000E+00	.0000E+00	.0000E+00
	.0000E+00	.0000E+00	.2125E+00	.2125E+00
15	.0000E+00	.0000E+00	.0000E+00	.0000E+00
	.0000E+00	.0000E+00	.2125E+00	.2125E+00
16	.0000E+00	.0000E+00	.0000E+00	.0000E+00
	.0000E+00	.0000E+00	.2125E+00	.2125E+00
17	.0000E+00	.0000E+00	.0000E+00	.0000E+00
	.0000E+00	.0000E+00	.2125E+00	.2125E+00
18	.0000E+00	.0000E+00	.0000E+00	.0000E+00
	.0000E+00	.0000E+00	.2125E+00	.2125E+00
19	.0000E+00	.0000E+00	.0000E+00	.0000E+00
	.0000E+00	.0000E+00	.2125E+00	.2125E+00
20	.0000E+00	.0000E+00	.0000E+00	.0000E+00
	.2125E+00	.2125E+00	.4249E+00	.4249E+00
21	.0000E+00	.0000E+00	.0000E+00	.0000E+00
	.2125E+00	.2125E+00	.4249E+00	.4249E+00
22	.0000E+00	.0000E+00	.0000E+00	.0000E+00
	.2125E+00	.2125E+00	.4249E+00	.4249E+00
23	.0000E+00	.0000E+00	.0000E+00	.0000E+00
	.2125E+00	.2125E+00	.4249E+00	.4249E+00
24	.0000E+00	.0000E+00	.0000E+00	.0000E+00
	.2125E+00	.2125E+00	.4249E+00	.4249E+00
25	.0000E+00	.0000E+00	.0000E+00	.0000E+00
	.2125E+00	.2125E+00	.4249E+00	.4249E+00
26	.0000E+00	.0000E+00	.0000E+00	.0000E+00
	.2125E+00	.2125E+00	.4249E+00	.4249E+00

LCS-14PRINT

========== I M A G E S 3 D ==========
= Copyright (c) 1984 Celestial Software Inc. =
==========

SOLVE DISPLACEMENTS Version 2.0 07/01/90

L O A D C A S E 4

SEISMIC LOAD, ESS

Plate/Temp / Plate/Pressure / Plate/Lat. load	Node1 / Node1 / Side	Node2 / Node2 / Dir.	Node3 / Node3 / Node1	Node4 / Node4 / Node2
27	.0000E+00	.0000E+00	.0000E+00	.0000E+00
	.2125E+00	.2125E+00	.4249E+00	.4249E+00
28	.0000E+00	.0000E+00	.0000E+00	.0000E+00
	.2125E+00	.2125E+00	.4249E+00	.4249E+00
29	.0000E+00	.0000E+00	.0000E+00	.0000E+00
	.2125E+00	.2125E+00	.4249E+00	.4249E+00
30	.0000E+00	.0000E+00	.0000E+00	.0000E+00
	.2125E+00	.2125E+00	.4249E+00	.4249E+00
31	.0000E+00	.0000E+00	.0000E+00	.0000E+00
	.2125E+00	.2125E+00	.4249E+00	.4249E+00
32	.0000E+00	.0000E+00	.0000E+00	.0000E+00
	.2125E+00	.2125E+00	.4249E+00	.4249E+00
33	.0000E+00	.0000E+00	.0000E+00	.0000E+00
	.2125E+00	.2125E+00	.4249E+00	.4249E+00
34	.0000E+00	.0000E+00	.0000E+00	.0000E+00
	.2125E+00	.2125E+00	.4249E+00	.4249E+00
35	.0000E+00	.0000E+00	.0000E+00	.0000E+00
	.2125E+00	.2125E+00	.4249E+00	.4249E+00
36	.0000E+00	.0000E+00	.0000E+00	.0000E+00
	.2125E+00	.2125E+00	.4249E+00	.4249E+00
37	.0000E+00	.0000E+00	.0000E+00	.0000E+00
	.2125E+00	.2125E+00	.4249E+00	.4249E+00
38	.0000E+00	.0000E+00	.0000E+00	.0000E+00
	.2125E+00	.2125E+00	.4249E+00	.4249E+00
39	.0000E+00	.0000E+00	.0000E+00	.0000E+00
	.4249E+00	.4249E+00	.6374E+00	.6374E+00
40	.0000E+00	.0000E+00	.0000E+00	.0000E+00
	.4249E+00	.4249E+00	.6374E+00	.6374E+00
41	.0000E+00	.0000E+00	.0000E+00	.0000E+00
	.4249E+00	.4249E+00	.6374E+00	.6374E+00
42	.0000E+00	.0000E+00	.0000E+00	.0000E+00
	.4249E+00	.4249E+00	.6374E+00	.6374E+00
43	.0000E+00	.0000E+00	.0000E+00	.0000E+00
	.4249E+00	.4249E+00	.6374E+00	.6374E+00
44	.0000E+00	.0000E+00	.0000E+00	.0000E+00
	.4249E+00	.4249E+00	.6374E+00	.6374E+00
45	.0000E+00	.0000E+00	.0000E+00	.0000E+00
	.4249E+00	.4249E+00	.6374E+00	.6374E+00
46	.0000E+00	.0000E+00	.0000E+00	.0000E+00
	.4249E+00	.4249E+00	.6374E+00	.6374E+00

========== I M A G E S 3 D ==========
= Copyright (c) 1984 Celestial Software Inc. =
==========

SOLVE DISPLACEMENTS Version 2.0 07/01/90

L O A D C A S E 4

SEISMIC LOAD, ESS

Plate/Temp / Plate/Pressure / Plate/Lat. load	Node1 / Node1 / Side	Node2 / Node2 / Dir.	Node3 / Node3 / Node1	Node4 / Node4 / Node2
47	.0000E+00	.0000E+00	.0000E+00	.0000E+00
	.4249E+00	.4249E+00	.6374E+00	.6374E+00
48	.0000E+00	.0000E+00	.0000E+00	.0000E+00
	.4249E+00	.4249E+00	.6374E+00	.6374E+00
49	.0000E+00	.0000E+00	.0000E+00	.0000E+00
	.4249E+00	.4249E+00	.6374E+00	.6374E+00
50	.0000E+00	.0000E+00	.0000E+00	.0000E+00
	.4249E+00	.4249E+00	.6374E+00	.6374E+00
51	.0000E+00	.0000E+00	.0000E+00	.0000E+00
	.4249E+00	.4249E+00	.6374E+00	.6374E+00
52	.0000E+00	.0000E+00	.0000E+00	.0000E+00
	.4249E+00	.4249E+00	.6374E+00	.6374E+00
53	.0000E+00	.0000E+00	.0000E+00	.0000E+00
	.4249E+00	.4249E+00	.6374E+00	.6374E+00
54	.0000E+00	.0000E+00	.0000E+00	.0000E+00
	.4249E+00	.4249E+00	.6374E+00	.6374E+00
55	.0000E+00	.0000E+00	.0000E+00	.0000E+00
	.4249E+00	.4249E+00	.6374E+00	.6374E+00
56	.0000E+00	.0000E+00	.0000E+00	.0000E+00
	.4249E+00	.4249E+00	.6374E+00	.6374E+00
57	.0000E+00	.0000E+00	.0000E+00	.0000E+00
	.4249E+00	.4249E+00	.6374E+00	.6374E+00
58	.0000E+00	.0000E+00	.0000E+00	.0000E+00
	.6374E+00	.6374E+00	.8499E+00	.8499E+00
59	.0000E+00	.0000E+00	.0000E+00	.0000E+00
	.6374E+00	.6374E+00	.8499E+00	.8499E+00
60	.0000E+00	.0000E+00	.0000E+00	.0000E+00
	.6374E+00	.6374E+00	.8499E+00	.8499E+00
61	.0000E+00	.0000E+00	.0000E+00	.0000E+00
	.6374E+00	.6374E+00	.8499E+00	.8499E+00
62	.0000E+00	.0000E+00	.0000E+00	.0000E+00
	.6374E+00	.6374E+00	.8499E+00	.8499E+00
63	.0000E+00	.0000E+00	.0000E+00	.0000E+00
	.6374E+00	.6374E+00	.8499E+00	.8499E+00
64	.0000E+00	.0000E+00	.0000E+00	.0000E+00
	.6374E+00	.6374E+00	.8499E+00	.8499E+00
65	.0000E+00	.0000E+00	.0000E+00	.0000E+00
	.6374E+00	.6374E+00	.8499E+00	.8499E+00
66	.0000E+00	.0000E+00	.0000E+00	.0000E+00
	.6374E+00	.6374E+00	.8499E+00	.8499E+00

========== I M A G E S 3 D ==========
= Copyright (c) 1984 Celestial Software Inc. =
==========

SOLVE DISPLACEMENTS Version 2.0 07/01/90

L O A D C A S E 4

SEISMIC LOAD, ESS

Plate/Temp Plate/Pressure Plate/Lat. load	Node1 Node1 Side	Node2 Node2 Dir.	Node3 Node3 Node1	Node4 Node4 Node2
67	.0000E+00	.0000E+00	.0000E+00	.0000E+00
	.6374E+00	.6374E+00	.8499E+00	.8499E+00
68	.0000E+00	.0000E+00	.0000E+00	.0000E+00
	.6374E+00	.6374E+00	.8499E+00	.8499E+00
69	.0000E+00	.0000E+00	.0000E+00	.0000E+00
	.6374E+00	.6374E+00	.8499E+00	.8499E+00
70	.0000E+00	.0000E+00	.0000E+00	.0000E+00
	.6374E+00	.6374E+00	.8499E+00	.8499E+00
71	.0000E+00	.0000E+00	.0000E+00	.0000E+00
	.6374E+00	.6374E+00	.8499E+00	.8499E+00
72	.0000E+00	.0000E+00	.0000E+00	.0000E+00
	.6374E+00	.6374E+00	.8499E+00	.8499E+00
73	.0000E+00	.0000E+00	.0000E+00	.0000E+00
	.6374E+00	.6374E+00	.8499E+00	.8499E+00
74	.0000E+00	.0000E+00	.0000E+00	.0000E+00
	.6374E+00	.6374E+00	.8499E+00	.8499E+00
75	.0000E+00	.0000E+00	.0000E+00	.0000E+00
	.6374E+00	.6374E+00	.8499E+00	.8499E+00
76	.0000E+00	.0000E+00	.0000E+00	.0000E+00
	.6374E+00	.6374E+00	.8499E+00	.8499E+00
77	.0000E+00	.0000E+00	.0000E+00	.0000E+00
	.8499E+00	.8499E+00	.1009E+01	.1009E+01
78	.0000E+00	.0000E+00	.0000E+00	.0000E+00
	.8499E+00	.8499E+00	.1009E+01	.1009E+01
79	.0000E+00	.0000E+00	.0000E+00	.0000E+00
	.8499E+00	.8499E+00	.1009E+01	.1009E+01
80	.0000E+00	.0000E+00	.0000E+00	.0000E+00
	.8499E+00	.8499E+00	.1009E+01	.1009E+01
81	.0000E+00	.0000E+00	.0000E+00	.0000E+00
	.8499E+00	.8499E+00	.1009E+01	.1009E+01
82	.0000E+00	.0000E+00	.0000E+00	.0000E+00
	.8499E+00	.8499E+00	.1009E+01	.1009E+01
83	.0000E+00	.0000E+00	.0000E+00	.0000E+00
	.8499E+00	.8499E+00	.1009E+01	.1009E+01
84	.0000E+00	.0000E+00	.0000E+00	.0000E+00
	.8499E+00	.8499E+00	.1009E+01	.1009E+01
85	.0000E+00	.0000E+00	.0000E+00	.0000E+00
	.8499E+00	.8499E+00	.1009E+01	.1009E+01
86	.0000E+00	.0000E+00	.0000E+00	.0000E+00
	.8499E+00	.8499E+00	.1009E+01	.1009E+01

========== I M A G E S 3 D ==========
= Copyright (c) 1984 Celestial Software Inc. =
==========

SOLVE DISPLACEMENTS Version 2.0 07/01/90

L O A D C A S E 4

SEISMIC LOAD, ESS

Plate/Temp Plate/Pressure Plate/Lat. load	Node1 Node1 Side	Node2 Node2 Dir.	Node3 Node3 Node1	Node4 Node4 Node2
87	.0000E+00	.0000E+00	.0000E+00	.0000E+00
	.8499E+00	.8499E+00	.1009E+01	.1009E+01
88	.0000E+00	.0000E+00	.0000E+00	.0000E+00
	.8499E+00	.8499E+00	.1009E+01	.1009E+01
89	.0000E+00	.0000E+00	.0000E+00	.0000E+00
	.8499E+00	.8499E+00	.1009E+01	.1009E+01
90	.0000E+00	.0000E+00	.0000E+00	.0000E+00
	.8499E+00	.8499E+00	.1009E+01	.1009E+01
91	.0000E+00	.0000E+00	.0000E+00	.0000E+00
	.8499E+00	.8499E+00	.1009E+01	.1009E+01
92	.0000E+00	.0000E+00	.0000E+00	.0000E+00
	.8499E+00	.8499E+00	.1009E+01	.1009E+01
93	.0000E+00	.0000E+00	.0000E+00	.0000E+00
	.8499E+00	.8499E+00	.1009E+01	.1009E+01
94	.0000E+00	.0000E+00	.0000E+00	.0000E+00
	.8499E+00	.8499E+00	.1009E+01	.1009E+01
95	.0000E+00	.0000E+00	.0000E+00	.0000E+00
	.8499E+00	.8499E+00	.1009E+01	.1009E+01
96	.0000E+00	.0000E+00	.0000E+00	.0000E+00
	.1009E+01	.1009E+01	.1142E+01	.1142E+01
97	.0000E+00	.0000E+00	.0000E+00	.0000E+00
	.1009E+01	.1009E+01	.1142E+01	.1142E+01
98	.0000E+00	.0000E+00	.0000E+00	.0000E+00
	.1009E+01	.1009E+01	.1142E+01	.1142E+01
99	.0000E+00	.0000E+00	.0000E+00	.0000E+00
	.1009E+01	.1009E+01	.1142E+01	.1142E+01
100	.0000E+00	.0000E+00	.0000E+00	.0000E+00
	.1009E+01	.1009E+01	.1142E+01	.1142E+01
101	.0000E+00	.0000E+00	.0000E+00	.0000E+00
	.1009E+01	.1009E+01	.1142E+01	.1142E+01
102	.0000E+00	.0000E+00	.0000E+00	.0000E+00
	.1009E+01	.1009E+01	.1142E+01	.1142E+01
103	.0000E+00	.0000E+00	.0000E+00	.0000E+00
	.1009E+01	.1009E+01	.1142E+01	.1142E+01
104	.0000E+00	.0000E+00	.0000E+00	.0000E+00
	.1009E+01	.1009E+01	.1142E+01	.1142E+01
105	.0000E+00	.0000E+00	.0000E+00	.0000E+00
	.1009E+01	.1009E+01	.1142E+01	.1142E+01
106	.0000E+00	.0000E+00	.0000E+00	.0000E+00
	.1009E+01	.1009E+01	.1142E+01	.1142E+01

========== I M A G E S 3 D ==========
= Copyright (c) 1984 Celestial Software Inc. =
==========

SOLVE DISPLACEMENTS Version 2.0 07/01/90

L O A D C A S E 4

SEISMIC LOAD, ESS

Plate/Temp / Plate/Pressure / Plate/Lat. load	Node1 / Node1 / Side	Node2 / Node2 / Dir.	Node3 / Node3 / Node1	Node4 / Node4 / Node2
107	.0000E+00	.0000E+00	.0000E+00	.0000E+00
	.1009E+01	.1009E+01	.1142E+01	.1142E+01
108	.0000E+00	.0000E+00	.0000E+00	.0000E+00
	.1009E+01	.1009E+01	.1142E+01	.1142E+01
109	.0000E+00	.0000E+00	.0000E+00	.0000E+00
	.1009E+01	.1009E+01	.1142E+01	.1142E+01
110	.0000E+00	.0000E+00	.0000E+00	.0000E+00
	.1009E+01	.1009E+01	.1142E+01	.1142E+01
111	.0000E+00	.0000E+00	.0000E+00	.0000E+00
	.1009E+01	.1009E+01	.1142E+01	.1142E+01
112	.0000E+00	.0000E+00	.0000E+00	.0000E+00
	.1009E+01	.1009E+01	.1142E+01	.1142E+01
113	.0000E+00	.0000E+00	.0000E+00	.0000E+00
	.1009E+01	.1009E+01	.1142E+01	.1142E+01
114	.0000E+00	.0000E+00	.0000E+00	.0000E+00
	.1009E+01	.1009E+01	.1142E+01	.1142E+01
115	.0000E+00	.0000E+00	.0000E+00	.0000E+00
	.1142E+01	.1142E+01	.1355E+01	.1355E+01
116	.0000E+00	.0000E+00	.0000E+00	.0000E+00
	.1142E+01	.1142E+01	.1355E+01	.1355E+01
117	.0000E+00	.0000E+00	.0000E+00	.0000E+00
	.1142E+01	.1142E+01	.1355E+01	.1355E+01
118	.0000E+00	.0000E+00	.0000E+00	.0000E+00
	.1142E+01	.1142E+01	.1355E+01	.1355E+01
119	.0000E+00	.0000E+00	.0000E+00	.0000E+00
	.1142E+01	.1142E+01	.1355E+01	.1355E+01
120	.0000E+00	.0000E+00	.0000E+00	.0000E+00
	.1142E+01	.1142E+01	.1355E+01	.1355E+01
121	.0000E+00	.0000E+00	.0000E+00	.0000E+00
	.1142E+01	.1142E+01	.1355E+01	.1355E+01
122	.0000E+00	.0000E+00	.0000E+00	.0000E+00
	.1142E+01	.1142E+01	.1355E+01	.1355E+01
123	.0000E+00	.0000E+00	.0000E+00	.0000E+00
	.1142E+01	.1142E+01	.1355E+01	.1355E+01
124	.0000E+00	.0000E+00	.0000E+00	.0000E+00
	.1142E+01	.1142E+01	.1355E+01	.1355E+01
125	.0000E+00	.0000E+00	.0000E+00	.0000E+00
	.1142E+01	.1142E+01	.1355E+01	.1355E+01
126	.0000E+00	.0000E+00	.0000E+00	.0000E+00
	.1142E+01	.1142E+01	.1355E+01	.1355E+01

========== I M A G E S 3 D ==========
= Copyright (c) 1984 Celestial Software Inc. =
==========

SOLVE DISPLACEMENTS Version 2.0 07/01/90

L O A D C A S E 4

SEISMIC LOAD, ESS

Plate/Temp / Plate/Pressure / Plate/Lat. load	Node1 / Node1 / Side	Node2 / Node2 / Dir.	Node3 / Node3 / Node1	Node4 / Node4 / Node2
127	.0000E+00	.0000E+00	.0000E+00	.0000E+00
	.1142E+01	.1142E+01	.1355E+01	.1355E+01
128	.0000E+00	.0000E+00	.0000E+00	.0000E+00
	.1142E+01	.1142E+01	.1355E+01	.1355E+01
129	.0000E+00	.0000E+00	.0000E+00	.0000E+00
	.1142E+01	.1142E+01	.1355E+01	.1355E+01
130	.0000E+00	.0000E+00	.0000E+00	.0000E+00
	.1142E+01	.1142E+01	.1355E+01	.1355E+01
131	.0000E+00	.0000E+00	.0000E+00	.0000E+00
	.1142E+01	.1142E+01	.1355E+01	.1355E+01
132	.0000E+00	.0000E+00	.0000E+00	.0000E+00
	.1142E+01	.1142E+01	.1355E+01	.1355E+01
133	.0000E+00	.0000E+00	.0000E+00	.0000E+00
	.1142E+01	.1142E+01	.1355E+01	.1355E+01
134	.0000E+00	.0000E+00	.0000E+00	.0000E+00
	.1355E+01	.1355E+01	.1491E+01	.1491E+01
135	.0000E+00	.0000E+00	.0000E+00	.0000E+00
	.1355E+01	.1355E+01	.1491E+01	.1491E+01
136	.0000E+00	.0000E+00	.0000E+00	.0000E+00
	.1355E+01	.1355E+01	.1491E+01	.1491E+01
137	.0000E+00	.0000E+00	.0000E+00	.0000E+00
	.1355E+01	.1355E+01	.1491E+01	.1491E+01
138	.0000E+00	.0000E+00	.0000E+00	.0000E+00
	.1355E+01	.1355E+01	.1491E+01	.1491E+01
139	.0000E+00	.0000E+00	.0000E+00	.0000E+00
	.1355E+01	.1355E+01	.1491E+01	.1491E+01
140	.0000E+00	.0000E+00	.0000E+00	.0000E+00
	.1355E+01	.1355E+01	.1491E+01	.1491E+01
141	.0000E+00	.0000E+00	.0000E+00	.0000E+00
	.1355E+01	.1355E+01	.1491E+01	.1491E+01
142	.0000E+00	.0000E+00	.0000E+00	.0000E+00
	.1355E+01	.1355E+01	.1491E+01	.1491E+01
143	.0000E+00	.0000E+00	.0000E+00	.0000E+00
	.1355E+01	.1355E+01	.1491E+01	.1491E+01
144	.0000E+00	.0000E+00	.0000E+00	.0000E+00
	.1355E+01	.1355E+01	.1491E+01	.1491E+01
145	.0000E+00	.0000E+00	.0000E+00	.0000E+00
	.1355E+01	.1355E+01	.1491E+01	.1491E+01
146	.0000E+00	.0000E+00	.0000E+00	.0000E+00
	.1355E+01	.1355E+01	.1491E+01	.1491E+01

= I M A G E S 3 D =
= Copyright (c) 1984 Celestial Software Inc. =

SOLVE DISPLACEMENTS Version 2.0 07/01/90

L O A D C A S E 4

SEISMIC LOAD, ESS

Plate/Temp / Plate/Pressure / Plate/Lat. load	Node1 / Node1 / Side	Node2 / Node2 / Dir.	Node3 / Node3 / Node1	Node4 / Node4 / Node2
147	.0000E+00	.0000E+00	.0000E+00	.0000E+00
	.1355E+01	.1355E+01	.1491E+01	.1491E+01
148	.0000E+00	.0000E+00	.0000E+00	.0000E+00
	.1355E+01	.1355E+01	.1491E+01	.1491E+01
149	.0000E+00	.0000E+00	.0000E+00	.0000E+00
	.1355E+01	.1355E+01	.1491E+01	.1491E+01
150	.0000E+00	.0000E+00	.0000E+00	.0000E+00
	.1355E+01	.1355E+01	.1491E+01	.1491E+01
151	.0000E+00	.0000E+00	.0000E+00	.0000E+00
	.1355E+01	.1355E+01	.1594E+01	.1491E+01
152	.0000E+00	.0000E+00	.0000E+00	.0000E+00
	.1355E+01	.1355E+01	.1594E+01	.1594E+01
153	.0000E+00	.0000E+00	.0000E+00	.0000E+00
	.1491E+01	.1491E+01	.1700E+01	.1700E+01
154	.0000E+00	.0000E+00	.0000E+00	.0000E+00
	.1491E+01	.1491E+01	.1700E+01	.1700E+01
155	.0000E+00	.0000E+00	.0000E+00	.0000E+00
	.1491E+01	.1491E+01	.1700E+01	.1700E+01
156	.0000E+00	.0000E+00	.0000E+00	.0000E+00
	.1491E+01	.1491E+01	.1700E+01	.1700E+01
157	.0000E+00	.0000E+00	.0000E+00	.0000E+00
	.1491E+01	.1491E+01	.1700E+01	.1700E+01
158	.0000E+00	.0000E+00	.0000E+00	.0000E+00
	.1491E+01	.1491E+01	.1700E+01	.1700E+01
159	.0000E+00	.0000E+00	.0000E+00	.0000E+00
	.1491E+01	.1491E+01	.1700E+01	.1700E+01
160	.0000E+00	.0000E+00	.0000E+00	.0000E+00
	.1491E+01	.1491E+01	.1700E+01	.1700E+01
161	.0000E+00	.0000E+00	.0000E+00	.0000E+00
	.1491E+01	.1491E+01	.1700E+01	.1700E+01
162	.0000E+00	.0000E+00	.0000E+00	.0000E+00
	.1491E+01	.1491E+01	.1700E+01	.1700E+01
163	.0000E+00	.0000E+00	.0000E+00	.0000E+00
	.1491E+01	.1491E+01	.1700E+01	.1700E+01
164	.0000E+00	.0000E+00	.0000E+00	.0000E+00
	.1491E+01	.1491E+01	.1700E+01	.1700E+01
165	.0000E+00	.0000E+00	.0000E+00	.0000E+00
	.1491E+01	.1491E+01	.1700E+01	.1700E+01
166	.0000E+00	.0000E+00	.0000E+00	.0000E+00
	.1491E+01	.1491E+01	.1700E+01	.1700E+01

= I M A G E S 3 D =
= Copyright (c) 1984 Celestial Software Inc. =

SOLVE DISPLACEMENTS Version 2.0 07/01/90

L O A D C A S E 4

SEISMIC LOAD, ESS

Plate/Temp / Plate/Pressure / Plate/Lat. load	Node1 / Node1 / Side	Node2 / Node2 / Dir.	Node3 / Node3 / Node1	Node4 / Node4 / Node2
167	.0000E+00	.0000E+00	.0000E+00	.0000E+00
	.1491E+01	.1491E+01	.1700E+01	.1700E+01
168	.0000E+00	.0000E+00	.0000E+00	.0000E+00
	.1491E+01	.1491E+01	.1700E+01	.1700E+01
169	.0000E+00	.0000E+00	.0000E+00	.0000E+00
	.1491E+01	.1491E+01	.1700E+01	.1700E+01
170	.0000E+00	.0000E+00	.0000E+00	.0000E+00
	.1491E+01	.1594E+01	.1700E+01	.1700E+01
171	.0000E+00	.0000E+00	.0000E+00	.0000E+00
	.1594E+01	.1594E+01	.1700E+01	.1700E+01
172	.0000E+00	.0000E+00	.0000E+00	.0000E+00
	.1700E+01	.1700E+01	.1912E+01	.1912E+01
173	.0000E+00	.0000E+00	.0000E+00	.0000E+00
	.1700E+01	.1700E+01	.1912E+01	.1912E+01
174	.0000E+00	.0000E+00	.0000E+00	.0000E+00
	.1700E+01	.1700E+01	.1912E+01	.1912E+01
175	.0000E+00	.0000E+00	.0000E+00	.0000E+00
	.1700E+01	.1700E+01	.1912E+01	.1912E+01
176	.0000E+00	.0000E+00	.0000E+00	.0000E+00
	.1700E+01	.1700E+01	.1912E+01	.1912E+01
177	.0000E+00	.0000E+00	.0000E+00	.0000E+00
	.1700E+01	.1700E+01	.1912E+01	.1912E+01
178	.0000E+00	.0000E+00	.0000E+00	.0000E+00
	.1700E+01	.1700E+01	.1912E+01	.1912E+01
179	.0000E+00	.0000E+00	.0000E+00	.0000E+00
	.1700E+01	.1700E+01	.1912E+01	.1912E+01
180	.0000E+00	.0000E+00	.0000E+00	.0000E+00
	.1700E+01	.1700E+01	.1912E+01	.1912E+01
181	.0000E+00	.0000E+00	.0000E+00	.0000E+00
	.1700E+01	.1700E+01	.1912E+01	.1912E+01
182	.0000E+00	.0000E+00	.0000E+00	.0000E+00
	.1700E+01	.1700E+01	.1912E+01	.1912E+01
183	.0000E+00	.0000E+00	.0000E+00	.0000E+00
	.1700E+01	.1700E+01	.1912E+01	.1912E+01
184	.0000E+00	.0000E+00	.0000E+00	.0000E+00
	.1700E+01	.1700E+01	.1912E+01	.1912E+01
185	.0000E+00	.0000E+00	.0000E+00	.0000E+00
	.1700E+01	.1700E+01	.1912E+01	.1912E+01
186	.0000E+00	.0000E+00	.0000E+00	.0000E+00
	.1700E+01	.1700E+01	.1912E+01	.1912E+01

========== I M A G E S 3 D ==========
= Copyright (c) 1984 Celestial Software Inc. =
==========

SOLVE DISPLACEMENTS Version 2.0 07/01/90

LOAD CASE 4

SEISMIC LOAD, ESS

Plate/Temp / Plate/Pressure / Plate/Lat. load	Node1 / Node1 / Side	Node2 / Node2 / Dir.	Node3 / Node3 / Node1	Node4 / Node4 / Node2
187	.0000E+00	.0000E+00	.0000E+00	.0000E+00
	.1700E+01	.1700E+01	.1912E+01	.1912E+01
188	.0000E+00	.0000E+00	.0000E+00	.0000E+00
	.1700E+01	.1700E+01	.1912E+01	.1912E+01
189	.0000E+00	.0000E+00	.0000E+00	.0000E+00
	.1700E+01	.1700E+01	.1912E+01	.1912E+01
190	.0000E+00	.0000E+00	.0000E+00	.0000E+00
	.1700E+01	.1700E+01	.1912E+01	.1912E+01
191	.0000E+00	.0000E+00	.0000E+00	.0000E+00
	.1912E+01	.1912E+01	.2045E+01	.2045E+01
	1	3	-.1250E+02	-.1250E+02
192	.0000E+00	.0000E+00	.0000E+00	.0000E+00
	.1912E+01	.1912E+01	.2045E+01	.2045E+01
	1	3	-.1250E+02	-.1250E+02
193	.0000E+00	.0000E+00	.0000E+00	.0000E+00
	.1912E+01	.1912E+01	.2045E+01	.2045E+01
	1	3	-.1250E+02	-.1250E+02
194	.0000E+00	.0000E+00	.0000E+00	.0000E+00
	.1912E+01	.1912E+01	.2045E+01	.2045E+01
	1	3	-.1250E+02	-.1250E+02
195	.0000E+00	.0000E+00	.0000E+00	.0000E+00
	.1912E+01	.1912E+01	.2045E+01	.2045E+01
	1	3	-.1250E+02	-.1250E+02
196	.0000E+00	.0000E+00	.0000E+00	.0000E+00
	.1912E+01	.1912E+01	.2045E+01	.2045E+01
	1	3	-.1250E+02	-.1250E+02
197	.0000E+00	.0000E+00	.0000E+00	.0000E+00
	.1912E+01	.1912E+01	.2045E+01	.2045E+01
	1	3	-.1250E+02	-.1250E+02
198	.0000E+00	.0000E+00	.0000E+00	.0000E+00
	.1912E+01	.1912E+01	.2045E+01	.2045E+01
	1	3	-.1250E+02	-.1250E+02
199	.0000E+00	.0000E+00	.0000E+00	.0000E+00
	.1912E+01	.1912E+01	.2045E+01	.2045E+01
	1	3	-.1250E+02	-.1250E+02
200	.0000E+00	.0000E+00	.0000E+00	.0000E+00
	.1912E+01	.1912E+01	.2045E+01	.2045E+01
	1	3	-.1250E+02	-.1250E+02
201	.0000E+00	.0000E+00	.0000E+00	.0000E+00
	.1912E+01	.1912E+01	.2045E+01	.2045E+01
	1	3	-.1250E+02	-.1250E+02

========== I M A G E S 3 D ==========
= Copyright (c) 1984 Celestial Software Inc. =
==========

SOLVE DISPLACEMENTS Version 2.0 07/01/90

LOAD CASE 4

SEISMIC LOAD, ESS

Plate/Temp / Plate/Pressure / Plate/Lat. load	Node1 / Node1 / Side	Node2 / Node2 / Dir.	Node3 / Node3 / Node1	Node4 / Node4 / Node2
202	.0000E+00	.0000E+00	.0000E+00	.0000E+00
	.1912E+01	.1912E+01	.2045E+01	.2045E+01
	1	3	-.1250E+02	-.1250E+02
203	.0000E+00	.0000E+00	.0000E+00	.0000E+00
	.1912E+01	.1912E+01	.2045E+01	.2045E+01
	1	3	-.1250E+02	-.1250E+02
204	.0000E+00	.0000E+00	.0000E+00	.0000E+00
	.1912E+01	.1912E+01	.2045E+01	.2045E+01
	1	3	-.1250E+02	-.1250E+02
205	.0000E+00	.0000E+00	.0000E+00	.0000E+00
	.1912E+01	.1912E+01	.2045E+01	.2045E+01
	1	3	-.1250E+02	-.1250E+02
206	.0000E+00	.0000E+00	.0000E+00	.0000E+00
	.1912E+01	.1912E+01	.2045E+01	.2045E+01
	1	3	-.1250E+02	-.1250E+02
207	.0000E+00	.0000E+00	.0000E+00	.0000E+00
	.1912E+01	.1912E+01	.2045E+01	.2045E+01
	1	3	-.1250E+02	-.1250E+02
208	.0000E+00	.0000E+00	.0000E+00	.0000E+00
	.1912E+01	.1912E+01	.2045E+01	.2045E+01
	1	3	-.1250E+02	-.1250E+02
209	.0000E+00	.0000E+00	.0000E+00	.0000E+00
	.1912E+01	.1912E+01	.2045E+01	.2045E+01
	1	3	-.1250E+02	-.1250E+02
210	.0000E+00	.0000E+00	.0000E+00	.0000E+00
	.2045E+01	.2045E+01	.2258E+01	.2258E+01
	1	2	-.2150E+02	-.2150E+02
	3	3	.1250E+02	.1250E+02
211	.0000E+00	.0000E+00	.0000E+00	.0000E+00
	.2045E+01	.2045E+01	.2258E+01	.2258E+01
	1	2	-.2150E+02	-.2150E+02
	3	3	.1250E+02	.1250E+02
212	.0000E+00	.0000E+00	.0000E+00	.0000E+00
	.2045E+01	.2045E+01	.2258E+01	.2258E+01
	1	2	-.2150E+02	-.2150E+02
	3	3	.1250E+02	.1250E+02
213	.0000E+00	.0000E+00	.0000E+00	.0000E+00
	.2045E+01	.2045E+01	.2258E+01	.2258E+01
	1	2	-.2150E+02	-.2150E+02
	3	3	.1250E+02	.1250E+02

I M A G E S 3 D
= Copyright (c) 1984 Celestial Software Inc. =

SOLVE DISPLACEMENTS Version 2.0 07/01/90

L O A D C A S E 4

SEISMIC LOAD, ESS

Plate/Temp Plate/Pressure Plate/Lat. load	Node1 Node1 Side	Node2 Node2 Dir.	Node3 Node3 Node1	Node4 Node4 Node2
214	.0000E+00	.0000E+00	.0000E+00	.0000E+00
	.2045E+01	.2045E+01	.2258E+01	.2258E+01
	1	2	-.2150E+02	-.2150E+02
	3	3	.1250E+02	.1250E+02
215	.0000E+00	.0000E+00	.0000E+00	.0000E+00
	.2045E+01	.2045E+01	.2258E+01	.2258E+01
	1	2	-.2150E+02	-.2150E+02
	3	3	.1250E+02	.1250E+02
216	.0000E+00	.0000E+00	.0000E+00	.0000E+00
	.2045E+01	.2045E+01	.2258E+01	.2258E+01
	1	2	-.2150E+02	-.2150E+02
	3	3	.1250E+02	.1250E+02
217	.0000E+00	.0000E+00	.0000E+00	.0000E+00
	.2045E+01	.2045E+01	.2258E+01	.2258E+01
	1	2	-.2150E+02	-.2150E+02
	3	3	.1250E+02	.1250E+02
218	.0000E+00	.0000E+00	.0000E+00	.0000E+00
	.2045E+01	.2045E+01	.2258E+01	.2258E+01
	1	2	-.2150E+02	-.2150E+02
	3	3	.1250E+02	.1250E+02
219	.0000E+00	.0000E+00	.0000E+00	.0000E+00
	.2045E+01	.2045E+01	.2258E+01	.2258E+01
	1	2	-.2150E+02	-.2150E+02
	3	3	.1250E+02	.1250E+02
220	.0000E+00	.0000E+00	.0000E+00	.0000E+00
	.2045E+01	.2045E+01	.2258E+01	.2258E+01
	1	2	-.2150E+02	-.2150E+02
	3	3	.1250E+02	.1250E+02
221	.0000E+00	.0000E+00	.0000E+00	.0000E+00
	.2045E+01	.2045E+01	.2258E+01	.2258E+01
	1	2	-.2150E+02	-.2150E+02
	3	3	.1250E+02	.1250E+02
222	.0000E+00	.0000E+00	.0000E+00	.0000E+00
	.2045E+01	.2045E+01	.2258E+01	.2258E+01
	1	2	-.2150E+02	-.2150E+02
	3	3	.1250E+02	.1250E+02
223	.0000E+00	.0000E+00	.0000E+00	.0000E+00
	.2045E+01	.2045E+01	.2258E+01	.2258E+01
	1	2	-.2150E+02	-.2150E+02
	3	3	.1250E+02	.1250E+02

I M A G E S 3 D
= Copyright (c) 1984 Celestial Software Inc. =

SOLVE DISPLACEMENTS Version 2.0 07/01/90

L O A D C A S E 4

SEISMIC LOAD, ESS

Plate/Temp Plate/Pressure Plate/Lat. load	Node1 Node1 Side	Node2 Node2 Dir.	Node3 Node3 Node1	Node4 Node4 Node2
224	.0000E+00	.0000E+00	.0000E+00	.0000E+00
	.2045E+01	.2045E+01	.2258E+01	.2258E+01
	1	2	-.2150E+02	-.2150E+02
	3	3	.1250E+02	.1250E+02
225	.0000E+00	.0000E+00	.0000E+00	.0000E+00
	.2045E+01	.2045E+01	.2258E+01	.2258E+01
	1	2	-.2150E+02	-.2150E+02
	3	3	.1250E+02	.1250E+02
226	.0000E+00	.0000E+00	.0000E+00	.0000E+00
	.2045E+01	.2045E+01	.2258E+01	.2258E+01
	1	2	-.2150E+02	-.2150E+02
	3	3	.1250E+02	.1250E+02
227	.0000E+00	.0000E+00	.0000E+00	.0000E+00
	.2045E+01	.2045E+01	.2258E+01	.2258E+01
	1	2	-.2150E+02	-.2150E+02
	3	3	.1250E+02	.1250E+02
228	.0000E+00	.0000E+00	.0000E+00	.0000E+00
	.2045E+01	.2045E+01	.2258E+01	.2258E+01
	1	2	-.2150E+02	-.2150E+02
	3	3	.1250E+02	.1250E+02
229	.0000E+00	.0000E+00	.0000E+00	.0000E+00
	.2258E+01	.2258E+01	.2470E+01	.2470E+01
230	.0000E+00	.0000E+00	.0000E+00	.0000E+00
	.2258E+01	.2258E+01	.2470E+01	.2470E+01
231	.0000E+00	.0000E+00	.0000E+00	.0000E+00
	.2258E+01	.2258E+01	.2470E+01	.2470E+01
232	.0000E+00	.0000E+00	.0000E+00	.0000E+00
	.2258E+01	.2258E+01	.2470E+01	.2470E+01
233	.0000E+00	.0000E+00	.0000E+00	.0000E+00
	.2258E+01	.2258E+01	.2470E+01	.2470E+01
234	.0000E+00	.0000E+00	.0000E+00	.0000E+00
	.2258E+01	.2258E+01	.2470E+01	.2470E+01
235	.0000E+00	.0000E+00	.0000E+00	.0000E+00
	.2258E+01	.2258E+01	.2470E+01	.2470E+01
236	.0000E+00	.0000E+00	.0000E+00	.0000E+00
	.2258E+01	.2258E+01	.2470E+01	.2470E+01
237	.0000E+00	.0000E+00	.0000E+00	.0000E+00
	.2258E+01	.2258E+01	.2470E+01	.2470E+01
238	.0000E+00	.0000E+00	.0000E+00	.0000E+00
	.2258E+01	.2258E+01	.2470E+01	.2470E+01

IC/149RUNT

========== I M A G E S 3 D ==========
= Copyright (c) 1984 Celestial Software Inc. =
==========

SOLVE DISPLACEMENTS Version 2.0 07/01/90

L O A D C A S E 4

SEISMIC LOAD, ESS

Plate/Temp / Plate/Pressure / Plate/Lat. load	Node1 / Node1 / Side	Node2 / Node2 / Dir.	Node3 / Node3 / Node1	Node4 / Node4 / Node2
239	.0000E+00	.0000E+00	.0000E+00	.0000E+00
	.2258E+01	.2258E+01	.2470E+01	.2470E+01
240	.0000E+00	.0000E+00	.0000E+00	.0000E+00
	.2258E+01	.2258E+01	.2470E+01	.2470E+01
241	.0000E+00	.0000E+00	.0000E+00	.0000E+00
	.2258E+01	.2258E+01	.2470E+01	.2470E+01
242	.0000E+00	.0000E+00	.0000E+00	.0000E+00
	.2258E+01	.2258E+01	.2470E+01	.2470E+01
243	.0000E+00	.0000E+00	.0000E+00	.0000E+00
	.2258E+01	.2258E+01	.2470E+01	.2470E+01
244	.0000E+00	.0000E+00	.0000E+00	.0000E+00
	.2258E+01	.2258E+01	.2470E+01	.2470E+01
245	.0000E+00	.0000E+00	.0000E+00	.0000E+00
	.2258E+01	.2258E+01	.2470E+01	.2470E+01
246	.0000E+00	.0000E+00	.0000E+00	.0000E+00
	.2258E+01	.2258E+01	.2470E+01	.2470E+01
247	.0000E+00	.0000E+00	.0000E+00	.0000E+00
	.2258E+01	.2258E+01	.2470E+01	.2470E+01

========== I M A G E S 3 D ==========
= Copyright (c) 1984 Celestial Software Inc. =
==========

SOLVE DISPLACEMENTS Version 2.0 07/01/90

L O A D C A S E 5

OPERATING EQUIPMENT LOAD, RO

GRAVITY LOADING

Direction	Gravity Factor	Load Factor
X	.0000E+00	.1000E+01
Y	.0000E+00	.1000E+01
Z	.0000E+00	.1000E+01

INERTIA LOADING

Direction	Translational Accel.	Rotational Accel.	Rotational Velocity	Origin
X	.0000E+00	.0000E+00	.0000E+00	.0000E+00
Y	.0000E+00	.0000E+00	.0000E+00	.0000E+00
Z	.0000E+00	.0000E+00	.0000E+00	.0000E+00

Gravity Acceleration = .3864E+03

CONCENTRATED LOADS

Node	Fx	Fy	Fz	Mx	My	Mz
91	-.7500E+04	-.7500E+04	.0000E+00	-.1900E+05	-.1900E+05	.0000E+00
175	-.7831E+04	-.7690E+03	.1346E+05	-.1590E+05	-.1879E+05	.5134E+05

REFERENCE TEMPERATURE = .0000E+00

PLATE TEMPERATURES/PRESSURES

Plate/Temp / Plate/Pressure / Plate/Lat. load	Node1 / Node1 / Side	Node2 / Node2 / Dir.	Node3 / Node3 / Node1	Node4 / Node4 / Node2
1	.0000E+00	.0000E+00	.0000E+00	.0000E+00
	.1390E+01	.1390E+01	.1390E+01	.1390E+01
2	.0000E+00	.0000E+00	.0000E+00	.0000E+00
	.1390E+01	.1390E+01	.1390E+01	.1390E+01

IMAGES 3D
= Copyright (c) 1984 Celestial Software Inc. =

SOLVE DISPLACEMENTS Version 2.0 07/01/90

LOAD CASE 5
OPERATING EQUIPMENT LOAD, RO

Plate/Temp Plate/Pressure Plate/Lat. load	Node1 Node1 Side	Node2 Node2 Dir.	Node3 Node3 Node1	Node4 Node4 Node2
3	.0000E+00	.0000E+00	.0000E+00	.0000E+00
	.1390E+01	.1390E+01	.1390E+01	.1390E+01
4	.0000E+00	.0000E+00	.0000E+00	.0000E+00
	.1390E+01	.1390E+01	.1390E+01	.1390E+01
5	.0000E+00	.0000E+00	.0000E+00	.0000E+00
	.1390E+01	.1390E+01	.1390E+01	.1390E+01
6	.0000E+00	.0000E+00	.0000E+00	.0000E+00
	.1390E+01	.1390E+01	.1390E+01	.1390E+01
7	.0000E+00	.0000E+00	.0000E+00	.0000E+00
	.1390E+01	.1390E+01	.1390E+01	.1390E+01
8	.0000E+00	.0000E+00	.0000E+00	.0000E+00
	.1390E+01	.1390E+01	.1390E+01	.1390E+01
9	.0000E+00	.0000E+00	.0000E+00	.0000E+00
	.1390E+01	.1390E+01	.1390E+01	.1390E+01
10	.0000E+00	.0000E+00	.0000E+00	.0000E+00
	.1390E+01	.1390E+01	.1390E+01	.1390E+01
11	.0000E+00	.0000E+00	.0000E+00	.0000E+00
	.1390E+01	.1390E+01	.1390E+01	.1390E+01
12	.0000E+00	.0000E+00	.0000E+00	.0000E+00
	.1390E+01	.1390E+01	.1390E+01	.1390E+01
13	.0000E+00	.0000E+00	.0000E+00	.0000E+00
	.1390E+01	.1390E+01	.1390E+01	.1390E+01
14	.0000E+00	.0000E+00	.0000E+00	.0000E+00
	.1390E+01	.1390E+01	.1390E+01	.1390E+01
15	.0000E+00	.0000E+00	.0000E+00	.0000E+00
	.1390E+01	.1390E+01	.1390E+01	.1390E+01
16	.0000E+00	.0000E+00	.0000E+00	.0000E+00
	.1390E+01	.1390E+01	.1390E+01	.1390E+01
17	.0000E+00	.0000E+00	.0000E+00	.0000E+00
	.1390E+01	.1390E+01	.1390E+01	.1390E+01
18	.0000E+00	.0000E+00	.0000E+00	.0000E+00
	.1390E+01	.1390E+01	.1390E+01	.1390E+01
19	.0000E+00	.0000E+00	.0000E+00	.0000E+00
	.1390E+01	.1390E+01	.1390E+01	.1390E+01
20	.0000E+00	.0000E+00	.0000E+00	.0000E+00
	.1390E+01	.1390E+01	.1390E+01	.1390E+01
21	.0000E+00	.0000E+00	.0000E+00	.0000E+00
	.1390E+01	.1390E+01	.1390E+01	.1390E+01
22	.0000E+00	.0000E+00	.0000E+00	.0000E+00
	.1390E+01	.1390E+01	.1390E+01	.1390E+01

IMAGES 3D
= Copyright (c) 1984 Celestial Software Inc. =

SOLVE DISPLACEMENTS Version 2.0 07/01/90

LOAD CASE 5
OPERATING EQUIPMENT LOAD, RO

Plate/Temp Plate/Pressure Plate/Lat. load	Node1 Node1 Side	Node2 Node2 Dir.	Node3 Node3 Node1	Node4 Node4 Node2
23	.0000E+00	.0000E+00	.0000E+00	.0000E+00
	.1390E+01	.1390E+01	.1390E+01	.1390E+01
24	.0000E+00	.0000E+00	.0000E+00	.0000E+00
	.1390E+01	.1390E+01	.1390E+01	.1390E+01
25	.0000E+00	.0000E+00	.0000E+00	.0000E+00
	.1390E+01	.1390E+01	.1390E+01	.1390E+01
26	.0000E+00	.0000E+00	.0000E+00	.0000E+00
	.1390E+01	.1390E+01	.1390E+01	.1390E+01
27	.0000E+00	.0000E+00	.0000E+00	.0000E+00
	.1390E+01	.1390E+01	.1390E+01	.1390E+01
28	.0000E+00	.0000E+00	.0000E+00	.0000E+00
	.1390E+01	.1390E+01	.1390E+01	.1390E+01
29	.0000E+00	.0000E+00	.0000E+00	.0000E+00
	.1390E+01	.1390E+01	.1390E+01	.1390E+01
30	.0000E+00	.0000E+00	.0000E+00	.0000E+00
	.1390E+01	.1390E+01	.1390E+01	.1390E+01
31	.0000E+00	.0000E+00	.0000E+00	.0000E+00
	.1390E+01	.1390E+01	.1390E+01	.1390E+01
32	.0000E+00	.0000E+00	.0000E+00	.0000E+00
	.1390E+01	.1390E+01	.1390E+01	.1390E+01
33	.0000E+00	.0000E+00	.0000E+00	.0000E+00
	.1390E+01	.1390E+01	.1390E+01	.1390E+01
34	.0000E+00	.0000E+00	.0000E+00	.0000E+00
	.1390E+01	.1390E+01	.1390E+01	.1390E+01
35	.0000E+00	.0000E+00	.0000E+00	.0000E+00
	.1390E+01	.1390E+01	.1390E+01	.1390E+01
36	.0000E+00	.0000E+00	.0000E+00	.0000E+00
	.1390E+01	.1390E+01	.1390E+01	.1390E+01
37	.0000E+00	.0000E+00	.0000E+00	.0000E+00
	.1390E+01	.1390E+01	.1390E+01	.1390E+01
38	.0000E+00	.0000E+00	.0000E+00	.0000E+00
	.1390E+01	.1390E+01	.1390E+01	.1390E+01
39	.0000E+00	.0000E+00	.0000E+00	.0000E+00
	.1390E+01	.1390E+01	.1390E+01	.1390E+01
40	.0000E+00	.0000E+00	.0000E+00	.0000E+00
	.1390E+01	.1390E+01	.1390E+01	.1390E+01
41	.0000E+00	.0000E+00	.0000E+00	.0000E+00
	.1390E+01	.1390E+01	.1390E+01	.1390E+01
42	.0000E+00	.0000E+00	.0000E+00	.0000E+00
	.1390E+01	.1390E+01	.1390E+01	.1390E+01

I M A G E S 3 D
= Copyright (c) 1984 Celestial Software Inc. =

SOLVE DISPLACEMENTS Version 2.0 07/01/90

L O A D C A S E 5

OPERATING EQUIPMENT LOAD, RO

Plate/Temp Plate/Pressure Plate/Lat. load	Node1 Node1 Side	Node2 Node2 Dir.	Node3 Node3 Node1	Node4 Node4 Node2
43	.0000E+00	.0000E+00	.0000E+00	.0000E+00
	.1390E+01	.1390E+01	.1390E+01	.1390E+01
44	.0000E+00	.0000E+00	.0000E+00	.0000E+00
	.1390E+01	.1390E+01	.1390E+01	.1390E+01
45	.0000E+00	.0000E+00	.0000E+00	.0000E+00
	.1390E+01	.1390E+01	.1390E+01	.1390E+01
46	.0000E+00	.0000E+00	.0000E+00	.0000E+00
	.1390E+01	.1390E+01	.1390E+01	.1390E+01
47	.0000E+00	.0000E+00	.0000E+00	.0000E+00
	.1390E+01	.1390E+01	.1390E+01	.1390E+01
48	.0000E+00	.0000E+00	.0000E+00	.0000E+00
	.1390E+01	.1390E+01	.1390E+01	.1390E+01
49	.0000E+00	.0000E+00	.0000E+00	.0000E+00
	.1390E+01	.1390E+01	.1390E+01	.1390E+01
50	.0000E+00	.0000E+00	.0000E+00	.0000E+00
	.1390E+01	.1390E+01	.1390E+01	.1390E+01
51	.0000E+00	.0000E+00	.0000E+00	.0000E+00
	.1390E+01	.1390E+01	.1390E+01	.1390E+01
52	.0000E+00	.0000E+00	.0000E+00	.0000E+00
	.1390E+01	.1390E+01	.1390E+01	.1390E+01
53	.0000E+00	.0000E+00	.0000E+00	.0000E+00
	.1390E+01	.1390E+01	.1390E+01	.1390E+01
54	.0000E+00	.0000E+00	.0000E+00	.0000E+00
	.1390E+01	.1390E+01	.1390E+01	.1390E+01
55	.0000E+00	.0000E+00	.0000E+00	.0000E+00
	.1390E+01	.1390E+01	.1390E+01	.1390E+01
56	.0000E+00	.0000E+00	.0000E+00	.0000E+00
	.1390E+01	.1390E+01	.1390E+01	.1390E+01
57	.0000E+00	.0000E+00	.0000E+00	.0000E+00
	.1390E+01	.1390E+01	.1390E+01	.1390E+01
58	.0000E+00	.0000E+00	.0000E+00	.0000E+00
	.1390E+01	.1390E+01	.1390E+01	.1390E+01
59	.0000E+00	.0000E+00	.0000E+00	.0000E+00
	.1390E+01	.1390E+01	.1390E+01	.1390E+01
60	.0000E+00	.0000E+00	.0000E+00	.0000E+00
	.1390E+01	.1390E+01	.1390E+01	.1390E+01
61	.0000E+00	.0000E+00	.0000E+00	.0000E+00
	.1390E+01	.1390E+01	.1390E+01	.1390E+01
62	.0000E+00	.0000E+00	.0000E+00	.0000E+00
	.1390E+01	.1390E+01	.1390E+01	.1390E+01

I M A G E S 3 D
= Copyright (c) 1984 Celestial Software Inc. =

SOLVE DISPLACEMENTS Version 2.0 07/01/90

L O A D C A S E 5

OPERATING EQUIPMENT LOAD, RO

Plate/Temp Plate/Pressure Plate/Lat. load	Node1 Node1 Side	Node2 Node2 Dir.	Node3 Node3 Node1	Node4 Node4 Node2
63	.0000E+00	.0000E+00	.0000E+00	.0000E+00
	.1390E+01	.1390E+01	.1390E+01	.1390E+01
64	.0000E+00	.0000E+00	.0000E+00	.0000E+00
	.1390E+01	.1390E+01	.1390E+01	.1390E+01
65	.0000E+00	.0000E+00	.0000E+00	.0000E+00
	.1390E+01	.1390E+01	.1390E+01	.1390E+01
66	.0000E+00	.0000E+00	.0000E+00	.0000E+00
	.1390E+01	.1390E+01	.1390E+01	.1390E+01
67	.0000E+00	.0000E+00	.0000E+00	.0000E+00
	.1390E+01	.1390E+01	.1390E+01	.1390E+01
68	.0000E+00	.0000E+00	.0000E+00	.0000E+00
	.1390E+01	.1390E+01	.1390E+01	.1390E+01
69	.0000E+00	.0000E+00	.0000E+00	.0000E+00
	.1390E+01	.1390E+01	.1390E+01	.1390E+01
70	.0000E+00	.0000E+00	.0000E+00	.0000E+00
	.1390E+01	.1390E+01	.1390E+01	.1390E+01
71	.0000E+00	.0000E+00	.0000E+00	.0000E+00
	.1390E+01	.1390E+01	.1390E+01	.1390E+01
72	.0000E+00	.0000E+00	.0000E+00	.0000E+00
	.1390E+01	.1390E+01	.1390E+01	.1390E+01
73	.0000E+00	.0000E+00	.0000E+00	.0000E+00
	.1390E+01	.1390E+01	.1390E+01	.1390E+01
74	.0000E+00	.0000E+00	.0000E+00	.0000E+00
	.1390E+01	.1390E+01	.1390E+01	.1390E+01
75	.0000E+00	.0000E+00	.0000E+00	.0000E+00
	.1390E+01	.1390E+01	.1390E+01	.1390E+01
76	.0000E+00	.0000E+00	.0000E+00	.0000E+00
	.1390E+01	.1390E+01	.1390E+01	.1390E+01
77	.0000E+00	.0000E+00	.0000E+00	.0000E+00
	.1390E+01	.1390E+01	.1390E+01	.1390E+01
78	.0000E+00	.0000E+00	.0000E+00	.0000E+00
	.1390E+01	.1390E+01	.1390E+01	.1390E+01
79	.0000E+00	.0000E+00	.0000E+00	.0000E+00
	.1390E+01	.1390E+01	.1390E+01	.1390E+01
80	.0000E+00	.0000E+00	.0000E+00	.0000E+00
	.1390E+01	.1390E+01	.1390E+01	.1390E+01
81	.0000E+00	.0000E+00	.0000E+00	.0000E+00
	.1390E+01	.1390E+01	.1390E+01	.1390E+01
82	.0000E+00	.0000E+00	.0000E+00	.0000E+00
	.1390E+01	.1390E+01	.1390E+01	.1390E+01

I M A G E S 3 D
= Copyright (c) 1984 Celestial Software Inc. =

SOLVE DISPLACEMENTS Version 2.0 07/01/90

L O A D C A S E 5

OPERATING EQUIPMENT LOAD, RO

Plate/Temp Plate/Pressure Plate/Lat. load	Node1 Node1 Side	Node2 Node2 Dir.	Node3 Node3 Node1	Node4 Node4 Node2
83	.0000E+00	.0000E+00	.0000E+00	.0000E+00
	.1390E+01	.1390E+01	.1390E+01	.1390E+01
84	.0000E+00	.0000E+00	.0000E+00	.0000E+00
	.1390E+01	.1390E+01	.1390E+01	.1390E+01
85	.0000E+00	.0000E+00	.0000E+00	.0000E+00
	.1390E+01	.1390E+01	.1390E+01	.1390E+01
86	.0000E+00	.0000E+00	.0000E+00	.0000E+00
	.1390E+01	.1390E+01	.1390E+01	.1390E+01
87	.0000E+00	.0000E+00	.0000E+00	.0000E+00
	.1390E+01	.1390E+01	.1390E+01	.1390E+01
88	.0000E+00	.0000E+00	.0000E+00	.0000E+00
	.1390E+01	.1390E+01	.1390E+01	.1390E+01
89	.0000E+00	.0000E+00	.0000E+00	.0000E+00
	.1390E+01	.1390E+01	.1390E+01	.1390E+01
90	.0000E+00	.0000E+00	.0000E+00	.0000E+00
	.1390E+01	.1390E+01	.1390E+01	.1390E+01
91	.0000E+00	.0000E+00	.0000E+00	.0000E+00
	.1390E+01	.1390E+01	.1390E+01	.1390E+01
92	.0000E+00	.0000E+00	.0000E+00	.0000E+00
	.1390E+01	.1390E+01	.1390E+01	.1390E+01
93	.0000E+00	.0000E+00	.0000E+00	.0000E+00
	.1390E+01	.1390E+01	.1390E+01	.1390E+01
94	.0000E+00	.0000E+00	.0000E+00	.0000E+00
	.1390E+01	.1390E+01	.1390E+01	.1390E+01
95	.0000E+00	.0000E+00	.0000E+00	.0000E+00
	.1390E+01	.1390E+01	.1390E+01	.1390E+01
96	.0000E+00	.0000E+00	.0000E+00	.0000E+00
	.1390E+01	.1390E+01	.1390E+01	.1390E+01
97	.0000E+00	.0000E+00	.0000E+00	.0000E+00
	.1390E+01	.1390E+01	.1390E+01	.1390E+01
98	.0000E+00	.0000E+00	.0000E+00	.0000E+00
	.1390E+01	.1390E+01	.1390E+01	.1390E+01
99	.0000E+00	.0000E+00	.0000E+00	.0000E+00
	.1390E+01	.1390E+01	.1390E+01	.1390E+01
100	.0000E+00	.0000E+00	.0000E+00	.0000E+00
	.1390E+01	.1390E+01	.1390E+01	.1390E+01
101	.0000E+00	.0000E+00	.0000E+00	.0000E+00
	.1390E+01	.1390E+01	.1390E+01	.1390E+01
102	.0000E+00	.0000E+00	.0000E+00	.0000E+00
	.1390E+01	.1390E+01	.1390E+01	.1390E+01

I M A G E S 3 D
= Copyright (c) 1984 Celestial Software Inc. =

SOLVE DISPLACEMENTS Version 2.0 07/01/90

L O A D C A S E 5

OPERATING EQUIPMENT LOAD, RO

Plate/Temp Plate/Pressure Plate/Lat. load	Node1 Node1 Side	Node2 Node2 Dir.	Node3 Node3 Node1	Node4 Node4 Node2
103	.0000E+00	.0000E+00	.0000E+00	.0000E+00
	.1390E+01	.1390E+01	.1390E+01	.1390E+01
104	.0000E+00	.0000E+00	.0000E+00	.0000E+00
	.1390E+01	.1390E+01	.1390E+01	.1390E+01
105	.0000E+00	.0000E+00	.0000E+00	.0000E+00
	.1390E+01	.1390E+01	.1390E+01	.1390E+01
106	.0000E+00	.0000E+00	.0000E+00	.0000E+00
	.1390E+01	.1390E+01	.1390E+01	.1390E+01
107	.0000E+00	.0000E+00	.0000E+00	.0000E+00
	.1390E+01	.1390E+01	.1390E+01	.1390E+01
108	.0000E+00	.0000E+00	.0000E+00	.0000E+00
	.1390E+01	.1390E+01	.1390E+01	.1390E+01
109	.0000E+00	.0000E+00	.0000E+00	.0000E+00
	.1390E+01	.1390E+01	.1390E+01	.1390E+01
110	.0000E+00	.0000E+00	.0000E+00	.0000E+00
	.1390E+01	.1390E+01	.1390E+01	.1390E+01
111	.0000E+00	.0000E+00	.0000E+00	.0000E+00
	.1390E+01	.1390E+01	.1390E+01	.1390E+01
112	.0000E+00	.0000E+00	.0000E+00	.0000E+00
	.1390E+01	.1390E+01	.1390E+01	.1390E+01
113	.0000E+00	.0000E+00	.0000E+00	.0000E+00
	.1390E+01	.1390E+01	.1390E+01	.1390E+01
114	.0000E+00	.0000E+00	.0000E+00	.0000E+00
	.1390E+01	.1390E+01	.1390E+01	.1390E+01
115	.0000E+00	.0000E+00	.0000E+00	.0000E+00
	.1390E+01	.1390E+01	.1390E+01	.1390E+01
116	.0000E+00	.0000E+00	.0000E+00	.0000E+00
	.1390E+01	.1390E+01	.1390E+01	.1390E+01
117	.0000E+00	.0000E+00	.0000E+00	.0000E+00
	.1390E+01	.1390E+01	.1390E+01	.1390E+01
118	.0000E+00	.0000E+00	.0000E+00	.0000E+00
	.1390E+01	.1390E+01	.1390E+01	.1390E+01
119	.0000E+00	.0000E+00	.0000E+00	.0000E+00
	.1390E+01	.1390E+01	.1390E+01	.1390E+01
120	.0000E+00	.0000E+00	.0000E+00	.0000E+00
	.1390E+01	.1390E+01	.1390E+01	.1390E+01
121	.0000E+00	.0000E+00	.0000E+00	.0000E+00
	.1390E+01	.1390E+01	.1390E+01	.1390E+01
122	.0000E+00	.0000E+00	.0000E+00	.0000E+00
	.1390E+01	.1390E+01	.1390E+01	.1390E+01

========== I M A G E S 3 D ==========
= Copyright (c) 1984 Celestial Software Inc. =
==========

SOLVE DISPLACEMENTS Version 2.0 07/01/90

L O A D C A S E 5

OPERATING EQUIPMENT LOAD, RO

Plate/Temp Plate/Pressure Plate/Lat. load	Node1 Node1 Side	Node2 Node2 Dir.	Node3 Node3 Node1	Node4 Node4 Node2
123	.0000E+00	.0000E+00	.0000E+00	.0000E+00
	.1390E+01	.1390E+01	.1390E+01	.1390E+01
124	.0000E+00	.0000E+00	.0000E+00	.0000E+00
	.1390E+01	.1390E+01	.1390E+01	.1390E+01
125	.0000E+00	.0000E+00	.0000E+00	.0000E+00
	.1390E+01	.1390E+01	.1390E+01	.1390E+01
126	.0000E+00	.0000E+00	.0000E+00	.0000E+00
	.1390E+01	.1390E+01	.1390E+01	.1390E+01
127	.0000E+00	.0000E+00	.0000E+00	.0000E+00
	.1390E+01	.1390E+01	.1390E+01	.1390E+01
128	.0000E+00	.0000E+00	.0000E+00	.0000E+00
	.1390E+01	.1390E+01	.1390E+01	.1390E+01
129	.0000E+00	.0000E+00	.0000E+00	.0000E+00
	.1390E+01	.1390E+01	.1390E+01	.1390E+01
130	.0000E+00	.0000E+00	.0000E+00	.0000E+00
	.1390E+01	.1390E+01	.1390E+01	.1390E+01
131	.0000E+00	.0000E+00	.0000E+00	.0000E+00
	.1390E+01	.1390E+01	.1390E+01	.1390E+01
132	.0000E+00	.0000E+00	.0000E+00	.0000E+00
	.1390E+01	.1390E+01	.1390E+01	.1390E+01
133	.0000E+00	.0000E+00	.0000E+00	.0000E+00
	.1390E+01	.1390E+01	.1390E+01	.1390E+01
134	.0000E+00	.0000E+00	.0000E+00	.0000E+00
	.1390E+01	.1390E+01	.1390E+01	.1390E+01
135	.0000E+00	.0000E+00	.0000E+00	.0000E+00
	.1390E+01	.1390E+01	.1390E+01	.1390E+01
136	.0000E+00	.0000E+00	.0000E+00	.0000E+00
	.1390E+01	.1390E+01	.1390E+01	.1390E+01
137	.0000E+00	.0000E+00	.0000E+00	.0000E+00
	.1390E+01	.1390E+01	.1390E+01	.1390E+01
138	.0000E+00	.0000E+00	.0000E+00	.0000E+00
	.1390E+01	.1390E+01	.1390E+01	.1390E+01
139	.0000E+00	.0000E+00	.0000E+00	.0000E+00
	.1390E+01	.1390E+01	.1390E+01	.1390E+01
140	.0000E+00	.0000E+00	.0000E+00	.0000E+00
	.1390E+01	.1390E+01	.1390E+01	.1390E+01
141	.0000E+00	.0000E+00	.0000E+00	.0000E+00
	.1390E+01	.1390E+01	.1390E+01	.1390E+01
142	.0000E+00	.0000E+00	.0000E+00	.0000E+00
	.1390E+01	.1390E+01	.1390E+01	.1390E+01

========== I M A G E S 3 D ==========
= Copyright (c) 1984 Celestial Software Inc. =
==========

SOLVE DISPLACEMENTS Version 2.0 07/01/90

L O A D C A S E 5

OPERATING EQUIPMENT LOAD, RO

Plate/Temp Plate/Pressure Plate/Lat. load	Node1 Node1 Side	Node2 Node2 Dir.	Node3 Node3 Node1	Node4 Node4 Node2
143	.0000E+00	.0000E+00	.0000E+00	.0000E+00
	.1390E+01	.1390E+01	.1390E+01	.1390E+01
144	.0000E+00	.0000E+00	.0000E+00	.0000E+00
	.1390E+01	.1390E+01	.1390E+01	.1390E+01
145	.0000E+00	.0000E+00	.0000E+00	.0000E+00
	.1390E+01	.1390E+01	.1390E+01	.1390E+01
146	.0000E+00	.0000E+00	.0000E+00	.0000E+00
	.1390E+01	.1390E+01	.1390E+01	.1390E+01
147	.0000E+00	.0000E+00	.0000E+00	.0000E+00
	.1390E+01	.1390E+01	.1390E+01	.1390E+01
148	.0000E+00	.0000E+00	.0000E+00	.0000E+00
	.1390E+01	.1390E+01	.1390E+01	.1390E+01
149	.0000E+00	.0000E+00	.0000E+00	.0000E+00
	.1390E+01	.1390E+01	.1390E+01	.1390E+01
150	.0000E+00	.0000E+00	.0000E+00	.0000E+00
	.1390E+01	.1390E+01	.1390E+01	.1390E+01
151	.0000E+00	.0000E+00	.0000E+00	.0000E+00
	.1390E+01	.1390E+01	.1390E+01	.1390E+01
152	.0000E+00	.0000E+00	.0000E+00	.0000E+00
	.1390E+01	.1390E+01	.1390E+01	.1390E+01
153	.0000E+00	.0000E+00	.0000E+00	.0000E+00
	.1390E+01	.1390E+01	.1390E+01	.1390E+01
154	.0000E+00	.0000E+00	.0000E+00	.0000E+00
	.1390E+01	.1390E+01	.1390E+01	.1390E+01
155	.0000E+00	.0000E+00	.0000E+00	.0000E+00
	.1390E+01	.1390E+01	.1390E+01	.1390E+01
156	.0000E+00	.0000E+00	.0000E+00	.0000E+00
	.1390E+01	.1390E+01	.1390E+01	.1390E+01
157	.0000E+00	.0000E+00	.0000E+00	.0000E+00
	.1390E+01	.1390E+01	.1390E+01	.1390E+01
158	.0000E+00	.0000E+00	.0000E+00	.0000E+00
	.1390E+01	.1390E+01	.1390E+01	.1390E+01
159	.0000E+00	.0000E+00	.0000E+00	.0000E+00
	.1390E+01	.1390E+01	.1390E+01	.1390E+01
160	.0000E+00	.0000E+00	.0000E+00	.0000E+00
	.1390E+01	.1390E+01	.1390E+01	.1390E+01
161	.0000E+00	.0000E+00	.0000E+00	.0000E+00
	.1390E+01	.1390E+01	.1390E+01	.1390E+01
162	.0000E+00	.0000E+00	.0000E+00	.0000E+00
	.1390E+01	.1390E+01	.1390E+01	.1390E+01

========== I M A G E S 3 D ==========
= Copyright (c) 1984 Celestial Software Inc. =
==========

SOLVE DISPLACEMENTS Version 2.0 07/01/90

L O A D C A S E 5

OPERATING EQUIPMENT LOAD, RO

Plate/Temp Plate/Pressure Plate/Lat. load	Node1 Node1 Side	Node2 Node2 Dir.	Node3 Node3 Node1	Node4 Node4 Node2
163	.0000E+00	.0000E+00	.0000E+00	.0000E+00
	.1390E+01	.1390E+01	.1390E+01	.1390E+01
164	.0000E+00	.0000E+00	.0000E+00	.0000E+00
	.1390E+01	.1390E+01	.1390E+01	.1390E+01
165	.0000E+00	.0000E+00	.0000E+00	.0000E+00
	.1390E+01	.1390E+01	.1390E+01	.1390E+01
166	.0000E+00	.0000E+00	.0000E+00	.0000E+00
	.1390E+01	.1390E+01	.1390E+01	.1390E+01
167	.0000E+00	.0000E+00	.0000E+00	.0000E+00
	.1390E+01	.1390E+01	.1390E+01	.1390E+01
168	.0000E+00	.0000E+00	.0000E+00	.0000E+00
	.1390E+01	.1390E+01	.1390E+01	.1390E+01
169	.0000E+00	.0000E+00	.0000E+00	.0000E+00
	.1390E+01	.1390E+01	.1390E+01	.1390E+01
170	.0000E+00	.0000E+00	.0000E+00	.0000E+00
	.1390E+01	.1390E+01	.1390E+01	.1390E+01
171	.0000E+00	.0000E+00	.0000E+00	.0000E+00
	.1390E+01	.1390E+01	.1390E+01	.1390E+01
172	.0000E+00	.0000E+00	.0000E+00	.0000E+00
	.1390E+01	.1390E+01	.1390E+01	.1390E+01
173	.0000E+00	.0000E+00	.0000E+00	.0000E+00
	.1390E+01	.1390E+01	.1390E+01	.1390E+01
174	.0000E+00	.0000E+00	.0000E+00	.0000E+00
	.1390E+01	.1390E+01	.1390E+01	.1390E+01
175	.0000E+00	.0000E+00	.0000E+00	.0000E+00
	.1390E+01	.1390E+01	.1390E+01	.1390E+01
176	.0000E+00	.0000E+00	.0000E+00	.0000E+00
	.1390E+01	.1390E+01	.1390E+01	.1390E+01
177	.0000E+00	.0000E+00	.0000E+00	.0000E+00
	.1390E+01	.1390E+01	.1390E+01	.1390E+01
178	.0000E+00	.0000E+00	.0000E+00	.0000E+00
	.1390E+01	.1390E+01	.1390E+01	.1390E+01
179	.0000E+00	.0000E+00	.0000E+00	.0000E+00
	.1390E+01	.1390E+01	.1390E+01	.1390E+01
180	.0000E+00	.0000E+00	.0000E+00	.0000E+00
	.1390E+01	.1390E+01	.1390E+01	.1390E+01
181	.0000E+00	.0000E+00	.0000E+00	.0000E+00
	.1390E+01	.1390E+01	.1390E+01	.1390E+01
182	.0000E+00	.0000E+00	.0000E+00	.0000E+00
	.1390E+01	.1390E+01	.1390E+01	.1390E+01

========== I M A G E S 3 D ==========
= Copyright (c) 1984 Celestial Software Inc. =
==========

SOLVE DISPLACEMENTS Version 2.0 07/01/90

L O A D C A S E 5

OPERATING EQUIPMENT LOAD, RO

Plate/Temp Plate/Pressure Plate/Lat. load	Node1 Node1 Side	Node2 Node2 Dir.	Node3 Node3 Node1	Node4 Node4 Node2
183	.0000E+00	.0000E+00	.0000E+00	.0000E+00
	.1390E+01	.1390E+01	.1390E+01	.1390E+01
184	.0000E+00	.0000E+00	.0000E+00	.0000E+00
	.1390E+01	.1390E+01	.1390E+01	.1390E+01
185	.0000E+00	.0000E+00	.0000E+00	.0000E+00
	.1390E+01	.1390E+01	.1390E+01	.1390E+01
186	.0000E+00	.0000E+00	.0000E+00	.0000E+00
	.1390E+01	.1390E+01	.1390E+01	.1390E+01
187	.0000E+00	.0000E+00	.0000E+00	.0000E+00
	.1390E+01	.1390E+01	.1390E+01	.1390E+01
188	.0000E+00	.0000E+00	.0000E+00	.0000E+00
	.1390E+01	.1390E+01	.1390E+01	.1390E+01
189	.0000E+00	.0000E+00	.0000E+00	.0000E+00
	.1390E+01	.1390E+01	.1390E+01	.1390E+01
190	.0000E+00	.0000E+00	.0000E+00	.0000E+00
	.1390E+01	.1390E+01	.1390E+01	.1390E+01
191	.0000E+00	.0000E+00	.0000E+00	.0000E+00
	.1390E+01	.1390E+01	.1390E+01	.1390E+01
192	.0000E+00	.0000E+00	.0000E+00	.0000E+00
	.1390E+01	.1390E+01	.1390E+01	.1390E+01
193	.0000E+00	.0000E+00	.0000E+00	.0000E+00
	.1390E+01	.1390E+01	.1390E+01	.1390E+01
194	.0000E+00	.0000E+00	.0000E+00	.0000E+00
	.1390E+01	.1390E+01	.1390E+01	.1390E+01
195	.0000E+00	.0000E+00	.0000E+00	.0000E+00
	.1390E+01	.1390E+01	.1390E+01	.1390E+01
196	.0000E+00	.0000E+00	.0000E+00	.0000E+00
	.1390E+01	.1390E+01	.1390E+01	.1390E+01
197	.0000E+00	.0000E+00	.0000E+00	.0000E+00
	.1390E+01	.1390E+01	.1390E+01	.1390E+01
198	.0000E+00	.0000E+00	.0000E+00	.0000E+00
	.1390E+01	.1390E+01	.1390E+01	.1390E+01
199	.0000E+00	.0000E+00	.0000E+00	.0000E+00
	.1390E+01	.1390E+01	.1390E+01	.1390E+01
200	.0000E+00	.0000E+00	.0000E+00	.0000E+00
	.1390E+01	.1390E+01	.1390E+01	.1390E+01
201	.0000E+00	.0000E+00	.0000E+00	.0000E+00
	.1390E+01	.1390E+01	.1390E+01	.1390E+01
202	.0000E+00	.0000E+00	.0000E+00	.0000E+00
	.1390E+01	.1390E+01	.1390E+01	.1390E+01

= I M A G E S 3 D =
= Copyright (c) 1984 Celestial Software Inc. =

SOLVE DISPLACEMENTS Version 2.0 07/01/90

L O A D C A S E 5

OPERATING EQUIPMENT LOAD, RO

Plate/Temp Plate/Pressure Plate/Lat. load	Node1 Node1 Side	Node2 Node2 Dir.	Node3 Node3 Node1	Node4 Node4 Node2
203	.0000E+00	.0000E+00	.0000E+00	.0000E+00
	.1390E+01	.1390E+01	.1390E+01	.1390E+01
204	.0000E+00	.0000E+00	.0000E+00	.0000E+00
	.1390E+01	.1390E+01	.1390E+01	.1390E+01
205	.0000E+00	.0000E+00	.0000E+00	.0000E+00
	.1390E+01	.1390E+01	.1390E+01	.1390E+01
206	.0000E+00	.0000E+00	.0000E+00	.0000E+00
	.1390E+01	.1390E+01	.1390E+01	.1390E+01
207	.0000E+00	.0000E+00	.0000E+00	.0000E+00
	.1390E+01	.1390E+01	.1390E+01	.1390E+01
208	.0000E+00	.0000E+00	.0000E+00	.0000E+00
	.1390E+01	.1390E+01	.1390E+01	.1390E+01
209	.0000E+00	.0000E+00	.0000E+00	.0000E+00
	.1390E+01	.1390E+01	.1390E+01	.1390E+01
210	.0000E+00	.0000E+00	.0000E+00	.0000E+00
	.1390E+01	.1390E+01	.1390E+01	.1390E+01
211	.0000E+00	.0000E+00	.0000E+00	.0000E+00
	.1390E+01	.1390E+01	.1390E+01	.1390E+01
212	.0000E+00	.0000E+00	.0000E+00	.0000E+00
	.1390E+01	.1390E+01	.1390E+01	.1390E+01
213	.0000E+00	.0000E+00	.0000E+00	.0000E+00
	.1390E+01	.1390E+01	.1390E+01	.1390E+01
214	.0000E+00	.0000E+00	.0000E+00	.0000E+00
	.1390E+01	.1390E+01	.1390E+01	.1390E+01
215	.0000E+00	.0000E+00	.0000E+00	.0000E+00
	.1390E+01	.1390E+01	.1390E+01	.1390E+01
216	.0000E+00	.0000E+00	.0000E+00	.0000E+00
	.1390E+01	.1390E+01	.1390E+01	.1390E+01

= I M A G E S 3 D =
= Copyright (c) 1984 Celestial Software Inc. =

SOLVE DISPLACEMENTS Version 2.0 07/01/90

L O A D C A S E 1

DEAD LOAD, D

APPLIED LOAD VECTOR

Node	Fx	Fy	Fz	Mx	My	Mz
1	.0000E+00	-.2812E+02	.0000E+00	.0000E+00	.0000E+00	.0000E+00
2	.0000E+00	-.5625E+02	.0000E+00	.0000E+00	.0000E+00	.0000E+00
3	.0000E+00	-.5625E+02	.0000E+00	.0000E+00	.0000E+00	.0000E+00
4	.0000E+00	-.5625E+02	.0000E+00	.0000E+00	.0000E+00	.0000E+00
5	.0000E+00	-.5625E+02	.0000E+00	.0000E+00	.0000E+00	.0000E+00
6	.0000E+00	-.5625E+02	.0000E+00	.0000E+00	.0000E+00	.0000E+00
7	.0000E+00	-.5625E+02	.0000E+00	.0000E+00	.0000E+00	.0000E+00
8	.0000E+00	-.5312E+02	.0000E+00	.0000E+00	.0000E+00	.0000E+00
9	.0000E+00	-.4375E+02	.0000E+00	.0000E+00	.0000E+00	.0000E+00
10	.0000E+00	-.3594E+02	.0000E+00	.0000E+00	.0000E+00	.0000E+00
11	.0000E+00	-.4687E+02	.0000E+00	.0000E+00	.0000E+00	.0000E+00
12	.0000E+00	-.5781E+02	.0000E+00	.0000E+00	.0000E+00	.0000E+00
13	.0000E+00	-.5625E+02	.0000E+00	.0000E+00	.0000E+00	.0000E+00
14	.0000E+00	-.5000E+02	.0000E+00	.0000E+00	.0000E+00	.0000E+00
15	.0000E+00	-.4062E+02	.0000E+00	.0000E+00	.0000E+00	.0000E+00
16	.0000E+00	-.3750E+02	.0000E+00	.0000E+00	.0000E+00	.0000E+00
17	.0000E+00	-.4375E+02	.0000E+00	.0000E+00	.0000E+00	.0000E+00
18	.0000E+00	-.4531E+02	.0000E+00	.0000E+00	.0000E+00	.0000E+00
19	.0000E+00	-.4062E+02	.0000E+00	.0000E+00	.0000E+00	.0000E+00
20	.0000E+00	-.2031E+02	.0000E+00	.0000E+00	.0000E+00	.0000E+00
21	.0000E+00	-.5625E+02	.0000E+00	.0000E+00	.0000E+00	.0000E+00
22	.0000E+00	-.1125E+03	.0000E+00	.0000E+00	.0000E+00	.0000E+00
23	.0000E+00	-.1125E+03	.0000E+00	.0000E+00	.0000E+00	.0000E+00
24	.0000E+00	-.1125E+03	.0000E+00	.0000E+00	.0000E+00	.0000E+00
25	.0000E+00	-.1125E+03	.0000E+00	.0000E+00	.0000E+00	.0000E+00
26	.0000E+00	-.1125E+03	.0000E+00	.0000E+00	.0000E+00	.0000E+00
27	.0000E+00	-.1125E+03	.0000E+00	.0000E+00	.0000E+00	.0000E+00
28	.0000E+00	-.1062E+03	.0000E+00	.0000E+00	.0000E+00	.0000E+00
29	.0000E+00	-.8749E+02	.0000E+00	.0000E+00	.0000E+00	.0000E+00
30	.0000E+00	-.7187E+02	.0000E+00	.0000E+00	.0000E+00	.0000E+00
31	.0000E+00	-.9374E+02	.0000E+00	.0000E+00	.0000E+00	.0000E+00
32	.0000E+00	-.1156E+03	.0000E+00	.0000E+00	.0000E+00	.0000E+00
33	.0000E+00	-.1125E+03	.0000E+00	.0000E+00	.0000E+00	.0000E+00
34	.0000E+00	-.9999E+02	.0000E+00	.0000E+00	.0000E+00	.0000E+00
35	.0000E+00	-.8124E+02	.0000E+00	.0000E+00	.0000E+00	.0000E+00

========== I M A G E S 3 D ==========
= Copyright (c) 1984 Celestial Software Inc. =
==========

SOLVE DISPLACEMENTS Version 2.0 07/01/90

LOAD CASE 1

DEAD LOAD, D

APPLIED LOAD VECTOR

Node	Fx	Fy	Fz	Mx	My	Mz
36	.0000E+00	-.7500E+02	.0000E+00	.0000E+00	.0000E+00	.0000E+00
37	.0000E+00	-.8749E+02	.0000E+00	.0000E+00	.0000E+00	.0000E+00
38	.0000E+00	-.9062E+02	.0000E+00	.0000E+00	.0000E+00	.0000E+00
39	.0000E+00	-.8124E+02	.0000E+00	.0000E+00	.0000E+00	.0000E+00
40	.0000E+00	-.4062E+02	.0000E+00	.0000E+00	.0000E+00	.0000E+00
41	.0000E+00	-.5625E+02	.0000E+00	.0000E+00	.0000E+00	.0000E+00
42	.0000E+00	-.1125E+03	.0000E+00	.0000E+00	.0000E+00	.0000E+00
43	.0000E+00	-.1125E+03	.0000E+00	.0000E+00	.0000E+00	.0000E+00
44	.0000E+00	-.1125E+03	.0000E+00	.0000E+00	.0000E+00	.0000E+00
45	.0000E+00	-.1125E+03	.0000E+00	.0000E+00	.0000E+00	.0000E+00
46	.0000E+00	-.1125E+03	.0000E+00	.0000E+00	.0000E+00	.0000E+00
47	.0000E+00	-.1125E+03	.0000E+00	.0000E+00	.0000E+00	.0000E+00
48	.0000E+00	-.1062E+03	.0000E+00	.0000E+00	.0000E+00	.0000E+00
49	.0000E+00	-.8749E+02	.0000E+00	.0000E+00	.0000E+00	.0000E+00
50	.0000E+00	-.7187E+02	.0000E+00	.0000E+00	.0000E+00	.0000E+00
51	.0000E+00	-.9374E+02	.0000E+00	.0000E+00	.0000E+00	.0000E+00
52	.0000E+00	-.1156E+03	.0000E+00	.0000E+00	.0000E+00	.0000E+00
53	.0000E+00	-.1125E+03	.0000E+00	.0000E+00	.0000E+00	.0000E+00
54	.0000E+00	-.9999E+02	.0000E+00	.0000E+00	.0000E+00	.0000E+00
55	.0000E+00	-.8124E+02	.0000E+00	.0000E+00	.0000E+00	.0000E+00
56	.0000E+00	-.7500E+02	.0000E+00	.0000E+00	.0000E+00	.0000E+00
57	.0000E+00	-.8749E+02	.0000E+00	.0000E+00	.0000E+00	.0000E+00
58	.0000E+00	-.9062E+02	.0000E+00	.0000E+00	.0000E+00	.0000E+00
59	.0000E+00	-.8124E+02	.0000E+00	.0000E+00	.0000E+00	.0000E+00
60	.0000E+00	-.4062E+02	.0000E+00	.0000E+00	.0000E+00	.0000E+00
61	.0000E+00	-.5625E+02	.0000E+00	.0000E+00	.0000E+00	.0000E+00
62	.0000E+00	-.1125E+03	.0000E+00	.0000E+00	.0000E+00	.0000E+00
63	.0000E+00	-.1125E+03	.0000E+00	.0000E+00	.0000E+00	.0000E+00
64	.0000E+00	-.1125E+03	.0000E+00	.0000E+00	.0000E+00	.0000E+00
65	.0000E+00	-.1125E+03	.0000E+00	.0000E+00	.0000E+00	.0000E+00
66	.0000E+00	-.1125E+03	.0000E+00	.0000E+00	.0000E+00	.0000E+00
67	.0000E+00	-.1125E+03	.0000E+00	.0000E+00	.0000E+00	.0000E+00
68	.0000E+00	-.1062E+03	.0000E+00	.0000E+00	.0000E+00	.0000E+00
69	.0000E+00	-.8749E+02	.0000E+00	.0000E+00	.0000E+00	.0000E+00
70	.0000E+00	-.7187E+02	.0000E+00	.0000E+00	.0000E+00	.0000E+00
71	.0000E+00	-.9374E+02	.0000E+00	.0000E+00	.0000E+00	.0000E+00
72	.0000E+00	-.1156E+03	.0000E+00	.0000E+00	.0000E+00	.0000E+00
73	.0000E+00	-.1125E+03	.0000E+00	.0000E+00	.0000E+00	.0000E+00
74	.0000E+00	-.9999E+02	.0000E+00	.0000E+00	.0000E+00	.0000E+00
75	.0000E+00	-.8124E+02	.0000E+00	.0000E+00	.0000E+00	.0000E+00

========== I M A G E S 3 D ==========
= Copyright (c) 1984 Celestial Software Inc. =
==========

SOLVE DISPLACEMENTS Version 2.0 07/01/90

LOAD CASE 1

DEAD LOAD, D

APPLIED LOAD VECTOR

Node	Fx	Fy	Fz	Mx	My	Mz
76	.0000E+00	-.7500E+02	.0000E+00	.0000E+00	.0000E+00	.0000E+00
77	.0000E+00	-.8749E+02	.0000E+00	.0000E+00	.0000E+00	.0000E+00
78	.0000E+00	-.9062E+02	.0000E+00	.0000E+00	.0000E+00	.0000E+00
79	.0000E+00	-.8124E+02	.0000E+00	.0000E+00	.0000E+00	.0000E+00
80	.0000E+00	-.4062E+02	.0000E+00	.0000E+00	.0000E+00	.0000E+00
81	.0000E+00	-.4922E+02	.0000E+00	.0000E+00	.0000E+00	.0000E+00
82	.0000E+00	-.9843E+02	.0000E+00	.0000E+00	.0000E+00	.0000E+00
83	.0000E+00	-.9843E+02	.0000E+00	.0000E+00	.0000E+00	.0000E+00
84	.0000E+00	-.9843E+02	.0000E+00	.0000E+00	.0000E+00	.0000E+00
85	.0000E+00	-.9843E+02	.0000E+00	.0000E+00	.0000E+00	.0000E+00
86	.0000E+00	-.9843E+02	.0000E+00	.0000E+00	.0000E+00	.0000E+00
87	.0000E+00	-.9843E+02	.0000E+00	.0000E+00	.0000E+00	.0000E+00
88	.0000E+00	-.9296E+02	.0000E+00	.0000E+00	.0000E+00	.0000E+00
89	.0000E+00	-.7656E+02	.0000E+00	.0000E+00	.0000E+00	.0000E+00
90	.0000E+00	-.6289E+02	.0000E+00	.0000E+00	.0000E+00	.0000E+00
91	.0000E+00	-.8203E+02	.0000E+00	.0000E+00	.0000E+00	.0000E+00
92	.0000E+00	-.1012E+03	.0000E+00	.0000E+00	.0000E+00	.0000E+00
93	.0000E+00	-.9843E+02	.0000E+00	.0000E+00	.0000E+00	.0000E+00
94	.0000E+00	-.8749E+02	.0000E+00	.0000E+00	.0000E+00	.0000E+00
95	.0000E+00	-.7109E+02	.0000E+00	.0000E+00	.0000E+00	.0000E+00
96	.0000E+00	-.6562E+02	.0000E+00	.0000E+00	.0000E+00	.0000E+00
97	.0000E+00	-.7656E+02	.0000E+00	.0000E+00	.0000E+00	.0000E+00
98	.0000E+00	-.7929E+02	.0000E+00	.0000E+00	.0000E+00	.0000E+00
99	.0000E+00	-.7109E+02	.0000E+00	.0000E+00	.0000E+00	.0000E+00
100	.0000E+00	-.3554E+02	.0000E+00	.0000E+00	.0000E+00	.0000E+00
101	.0000E+00	-.3867E+02	.0000E+00	.0000E+00	.0000E+00	.0000E+00
102	.0000E+00	-.7734E+02	.0000E+00	.0000E+00	.0000E+00	.0000E+00
103	.0000E+00	-.7734E+02	.0000E+00	.0000E+00	.0000E+00	.0000E+00
104	.0000E+00	-.7734E+02	.0000E+00	.0000E+00	.0000E+00	.0000E+00
105	.0000E+00	-.7734E+02	.0000E+00	.0000E+00	.0000E+00	.0000E+00
106	.0000E+00	-.7734E+02	.0000E+00	.0000E+00	.0000E+00	.0000E+00
107	.0000E+00	-.7734E+02	.0000E+00	.0000E+00	.0000E+00	.0000E+00
108	.0000E+00	-.7304E+02	.0000E+00	.0000E+00	.0000E+00	.0000E+00
109	.0000E+00	-.6015E+02	.0000E+00	.0000E+00	.0000E+00	.0000E+00
110	.0000E+00	-.4941E+02	.0000E+00	.0000E+00	.0000E+00	.0000E+00
111	.0000E+00	-.6445E+02	.0000E+00	.0000E+00	.0000E+00	.0000E+00
112	.0000E+00	-.7949E+02	.0000E+00	.0000E+00	.0000E+00	.0000E+00
113	.0000E+00	-.7734E+02	.0000E+00	.0000E+00	.0000E+00	.0000E+00
114	.0000E+00	-.6875E+02	.0000E+00	.0000E+00	.0000E+00	.0000E+00
115	.0000E+00	-.5586E+02	.0000E+00	.0000E+00	.0000E+00	.0000E+00

I M A G E S 3 D
= Copyright (c) 1984 Celestial Software Inc. =

SOLVE DISPLACEMENTS Version 2.0 07/01/90

L O A D C A S E 1

DEAD LOAD, D

APPLIED LOAD VECTOR

Node	Fx	Fy	Fz	Mx	My	Mz
116	.0000E+00	-.5156E+02	.0000E+00	.0000E+00	.0000E+00	.0000E+00
117	.0000E+00	-.6015E+02	.0000E+00	.0000E+00	.0000E+00	.0000E+00
118	.0000E+00	-.6230E+02	.0000E+00	.0000E+00	.0000E+00	.0000E+00
119	.0000E+00	-.5586E+02	.0000E+00	.0000E+00	.0000E+00	.0000E+00
120	.0000E+00	-.2793E+02	.0000E+00	.0000E+00	.0000E+00	.0000E+00
121	.0000E+00	-.4570E+02	.0000E+00	.0000E+00	.0000E+00	.0000E+00
122	.0000E+00	-.9140E+02	.0000E+00	.0000E+00	.0000E+00	.0000E+00
123	.0000E+00	-.9140E+02	.0000E+00	.0000E+00	.0000E+00	.0000E+00
124	.0000E+00	-.9140E+02	.0000E+00	.0000E+00	.0000E+00	.0000E+00
125	.0000E+00	-.9140E+02	.0000E+00	.0000E+00	.0000E+00	.0000E+00
126	.0000E+00	-.9140E+02	.0000E+00	.0000E+00	.0000E+00	.0000E+00
127	.0000E+00	-.9140E+02	.0000E+00	.0000E+00	.0000E+00	.0000E+00
128	.0000E+00	-.8632E+02	.0000E+00	.0000E+00	.0000E+00	.0000E+00
129	.0000E+00	-.7109E+02	.0000E+00	.0000E+00	.0000E+00	.0000E+00
130	.0000E+00	-.5839E+02	.0000E+00	.0000E+00	.0000E+00	.0000E+00
131	.0000E+00	-.7617E+02	.0000E+00	.0000E+00	.0000E+00	.0000E+00
132	.0000E+00	-.9394E+02	.0000E+00	.0000E+00	.0000E+00	.0000E+00
133	.0000E+00	-.9140E+02	.0000E+00	.0000E+00	.0000E+00	.0000E+00
134	.0000E+00	-.8124E+02	.0000E+00	.0000E+00	.0000E+00	.0000E+00
135	.0000E+00	-.6601E+02	.0000E+00	.0000E+00	.0000E+00	.0000E+00
136	.0000E+00	-.6093E+02	.0000E+00	.0000E+00	.0000E+00	.0000E+00
137	.0000E+00	-.7109E+02	.0000E+00	.0000E+00	.0000E+00	.0000E+00
138	.0000E+00	-.7363E+02	.0000E+00	.0000E+00	.0000E+00	.0000E+00
139	.0000E+00	-.6601E+02	.0000E+00	.0000E+00	.0000E+00	.0000E+00
140	.0000E+00	-.3301E+02	.0000E+00	.0000E+00	.0000E+00	.0000E+00
141	.0000E+00	-.4614E+02	.0000E+00	.0000E+00	.0000E+00	.0000E+00
142	.0000E+00	-.9228E+02	.0000E+00	.0000E+00	.0000E+00	.0000E+00
143	.0000E+00	-.9228E+02	.0000E+00	.0000E+00	.0000E+00	.0000E+00
144	.0000E+00	-.9228E+02	.0000E+00	.0000E+00	.0000E+00	.0000E+00
145	.0000E+00	-.9228E+02	.0000E+00	.0000E+00	.0000E+00	.0000E+00
146	.0000E+00	-.9228E+02	.0000E+00	.0000E+00	.0000E+00	.0000E+00
147	.0000E+00	-.9228E+02	.0000E+00	.0000E+00	.0000E+00	.0000E+00
148	.0000E+00	-.8715E+02	.0000E+00	.0000E+00	.0000E+00	.0000E+00
149	.0000E+00	-.7177E+02	.0000E+00	.0000E+00	.0000E+00	.0000E+00
150	.0000E+00	-.5896E+02	.0000E+00	.0000E+00	.0000E+00	.0000E+00
151	.0000E+00	-.7690E+02	.0000E+00	.0000E+00	.0000E+00	.0000E+00
152	.0000E+00	-.9484E+02	.0000E+00	.0000E+00	.0000E+00	.0000E+00
153	.0000E+00	-.9228E+02	.0000E+00	.0000E+00	.0000E+00	.0000E+00
154	.0000E+00	-.8203E+02	.0000E+00	.0000E+00	.0000E+00	.0000E+00
155	.0000E+00	-.6665E+02	.0000E+00	.0000E+00	.0000E+00	.0000E+00

I M A G E S 3 D
= Copyright (c) 1984 Celestial Software Inc. =

SOLVE DISPLACEMENTS Version 2.0 07/01/90

L O A D C A S E 1

DEAD LOAD, D

APPLIED LOAD VECTOR

Node	Fx	Fy	Fz	Mx	My	Mz
156	.0000E+00	-.6152E+02	.0000E+00	.0000E+00	.0000E+00	.0000E+00
157	.0000E+00	-.7177E+02	.0000E+00	.0000E+00	.0000E+00	.0000E+00
158	.0000E+00	-.7762E+02	.0000E+00	.0000E+00	.0000E+00	.0000E+00
159	.0000E+00	-.8304E+02	.0000E+00	.0000E+00	.0000E+00	.0000E+00
160	.0000E+00	-.4316E+02	.0000E+00	.0000E+00	.0000E+00	.0000E+00
161	.0000E+00	-.4570E+02	.0000E+00	.0000E+00	.0000E+00	.0000E+00
162	.0000E+00	-.9140E+02	.0000E+00	.0000E+00	.0000E+00	.0000E+00
163	.0000E+00	-.9140E+02	.0000E+00	.0000E+00	.0000E+00	.0000E+00
164	.0000E+00	-.9140E+02	.0000E+00	.0000E+00	.0000E+00	.0000E+00
165	.0000E+00	-.9140E+02	.0000E+00	.0000E+00	.0000E+00	.0000E+00
166	.0000E+00	-.9140E+02	.0000E+00	.0000E+00	.0000E+00	.0000E+00
167	.0000E+00	-.9140E+02	.0000E+00	.0000E+00	.0000E+00	.0000E+00
168	.0000E+00	-.8632E+02	.0000E+00	.0000E+00	.0000E+00	.0000E+00
169	.0000E+00	-.7109E+02	.0000E+00	.0000E+00	.0000E+00	.0000E+00
170	.0000E+00	-.5839E+02	.0000E+00	.0000E+00	.0000E+00	.0000E+00
171	.0000E+00	-.7617E+02	.0000E+00	.0000E+00	.0000E+00	.0000E+00
172	.0000E+00	-.9394E+02	.0000E+00	.0000E+00	.0000E+00	.0000E+00
173	.0000E+00	-.9140E+02	.0000E+00	.0000E+00	.0000E+00	.0000E+00
174	.0000E+00	-.8124E+02	.0000E+00	.0000E+00	.0000E+00	.0000E+00
175	.0000E+00	-.6601E+02	.0000E+00	.0000E+00	.0000E+00	.0000E+00
176	.0000E+00	-.6093E+02	.0000E+00	.0000E+00	.0000E+00	.0000E+00
177	.0000E+00	-.7109E+02	.0000E+00	.0000E+00	.0000E+00	.0000E+00
178	.0000E+00	-.7363E+02	.0000E+00	.0000E+00	.0000E+00	.0000E+00
179	.0000E+00	-.6693E+02	.0000E+00	.0000E+00	.0000E+00	.0000E+00
180	.0000E+00	-.3392E+02	.0000E+00	.0000E+00	.0000E+00	.0000E+00
181	.0000E+00	-.5308E+02	.0000E+00	.0000E+00	.0000E+00	.0000E+00
182	.0000E+00	-.1110E+03	.0000E+00	.0000E+00	.0000E+00	.0000E+00
183	.0000E+00	-.1158E+03	.0000E+00	.0000E+00	.0000E+00	.0000E+00
184	.0000E+00	-.1158E+03	.0000E+00	.0000E+00	.0000E+00	.0000E+00
185	.0000E+00	-.1137E+03	.0000E+00	.0000E+00	.0000E+00	.0000E+00
186	.0000E+00	-.1116E+03	.0000E+00	.0000E+00	.0000E+00	.0000E+00
187	.0000E+00	-.1116E+03	.0000E+00	.0000E+00	.0000E+00	.0000E+00
188	.0000E+00	-.1054E+03	.0000E+00	.0000E+00	.0000E+00	.0000E+00
189	.0000E+00	-.8681E+02	.0000E+00	.0000E+00	.0000E+00	.0000E+00
190	.0000E+00	-.7131E+02	.0000E+00	.0000E+00	.0000E+00	.0000E+00
191	.0000E+00	-.9301E+02	.0000E+00	.0000E+00	.0000E+00	.0000E+00
192	.0000E+00	-.1147E+03	.0000E+00	.0000E+00	.0000E+00	.0000E+00
193	.0000E+00	-.1116E+03	.0000E+00	.0000E+00	.0000E+00	.0000E+00
194	.0000E+00	-.9921E+02	.0000E+00	.0000E+00	.0000E+00	.0000E+00
195	.0000E+00	-.8061E+02	.0000E+00	.0000E+00	.0000E+00	.0000E+00

I M A G E S 3 D
= Copyright (c) 1984 Celestial Software Inc. =

SOLVE DISPLACEMENTS Version 2.0 07/01/90

DEAD LOAD, D

LOAD CASE 1

APPLIED LOAD VECTOR

Node	Fx	Fy	Fz	Mx	My	Mz
196	.0000E+00	-.7441E+02	.0000E+00	.0000E+00	.0000E+00	.0000E+00
197	.0000E+00	-.8681E+02	.0000E+00	.0000E+00	.0000E+00	.0000E+00
198	.0000E+00	-.8926E+02	.0000E+00	.0000E+00	.0000E+00	.0000E+00
199	.0000E+00	-.7524E+02	.0000E+00	.0000E+00	.0000E+00	.0000E+00
200	.0000E+00	-.3889E+02	.0000E+00	.0000E+00	.0000E+00	.0000E+00
201	.0000E+00	-.3652E+02	-.1564E+03	.0000E+00	.0000E+00	.0000E+00
202	.0000E+00	-.9030E+02	-.4259E+03	.0000E+00	.0000E+00	.0000E+00
203	.0000E+00	-.1075E+03	-.5390E+03	.0000E+00	.0000E+00	.0000E+00
204	.0000E+00	-.1075E+03	-.5390E+03	.0000E+00	.0000E+00	.0000E+00
205	.0000E+00	-.9947E+02	-.4900E+03	.0000E+00	.0000E+00	.0000E+00
206	.0000E+00	-.9140E+02	-.4410E+03	.0000E+00	.0000E+00	.0000E+00
207	.0000E+00	-.9140E+02	-.4410E+03	.0000E+00	.0000E+00	.0000E+00
208	.0000E+00	-.8632E+02	-.4165E+03	.0000E+00	.0000E+00	.0000E+00
209	.0000E+00	-.7109E+02	-.3430E+03	.0000E+00	.0000E+00	.0000E+00
210	.0000E+00	-.5839E+02	-.2818E+03	.0000E+00	.0000E+00	.0000E+00
211	.0000E+00	-.7617E+02	-.3675E+03	.0000E+00	.0000E+00	.0000E+00
212	.0000E+00	-.9394E+02	-.4533E+03	.0000E+00	.0000E+00	.0000E+00
213	.0000E+00	-.9140E+02	-.4410E+03	.0000E+00	.0000E+00	.0000E+00
214	.0000E+00	-.8124E+02	-.3920E+03	.0000E+00	.0000E+00	.0000E+00
215	.0000E+00	-.6601E+02	-.3185E+03	.0000E+00	.0000E+00	.0000E+00
216	.0000E+00	-.6093E+02	-.2940E+03	.0000E+00	.0000E+00	.0000E+00
217	.0000E+00	-.7109E+02	-.3430E+03	.0000E+00	.0000E+00	.0000E+00
218	.0000E+00	-.8372E+02	-.4165E+03	.0000E+00	.0000E+00	.0000E+00
219	.0000E+00	-.9065E+02	-.4482E+03	.0000E+00	.0000E+00	.0000E+00
220	.0000E+00	-.4756E+02	-.2277E+03	.0000E+00	.0000E+00	.0000E+00
221	.0000E+00	-.3953E+03	.0000E+00	.0000E+00	.0000E+00	.0000E+00
222	.0000E+00	-.9081E+03	.0000E+00	.0000E+00	.0000E+00	.0000E+00
223	.0000E+00	-.1026E+04	.0000E+00	.0000E+00	.0000E+00	.0000E+00
224	.0000E+00	-.1026E+04	.0000E+00	.0000E+00	.0000E+00	.0000E+00
225	.0000E+00	-.9325E+03	.0000E+00	.0000E+00	.0000E+00	.0000E+00
226	.0000E+00	-.8392E+03	.0000E+00	.0000E+00	.0000E+00	.0000E+00
227	.0000E+00	-.8392E+03	.0000E+00	.0000E+00	.0000E+00	.0000E+00
228	.0000E+00	-.7926E+03	.0000E+00	.0000E+00	.0000E+00	.0000E+00
229	.0000E+00	-.6527E+03	.0000E+00	.0000E+00	.0000E+00	.0000E+00
230	.0000E+00	-.5362E+03	.0000E+00	.0000E+00	.0000E+00	.0000E+00
231	.0000E+00	-.6993E+03	.0000E+00	.0000E+00	.0000E+00	.0000E+00
232	.0000E+00	-.8625E+03	.0000E+00	.0000E+00	.0000E+00	.0000E+00
233	.0000E+00	-.8392E+03	.0000E+00	.0000E+00	.0000E+00	.0000E+00
234	.0000E+00	-.7460E+03	.0000E+00	.0000E+00	.0000E+00	.0000E+00
235	.0000E+00	-.6061E+03	.0000E+00	.0000E+00	.0000E+00	.0000E+00

I M A G E S 3 D
= Copyright (c) 1984 Celestial Software Inc. =

SOLVE DISPLACEMENTS Version 2.0 07/01/90

DEAD LOAD, D

LOAD CASE 1

APPLIED LOAD VECTOR

Node	Fx	Fy	Fz	Mx	My	Mz
236	.0000E+00	-.5595E+03	.0000E+00	.0000E+00	.0000E+00	.0000E+00
237	.0000E+00	-.6527E+03	.0000E+00	.0000E+00	.0000E+00	.0000E+00
238	.0000E+00	-.7926E+03	.0000E+00	.0000E+00	.0000E+00	.0000E+00
239	.0000E+00	-.9547E+03	.0000E+00	.0000E+00	.0000E+00	.0000E+00
240	.0000E+00	-.5351E+03	.0000E+00	.0000E+00	.0000E+00	.0000E+00
241	.0000E+00	-.3906E+02	.2205E+03	.0000E+00	.0000E+00	.0000E+00
242	.0000E+00	-.8680E+02	.4900E+03	.0000E+00	.0000E+00	.0000E+00
243	.0000E+00	-.9548E+02	.5390E+03	.0000E+00	.0000E+00	.0000E+00
244	.0000E+00	-.9548E+02	.5390E+03	.0000E+00	.0000E+00	.0000E+00
245	.0000E+00	-.8680E+02	.4900E+03	.0000E+00	.0000E+00	.0000E+00
246	.0000E+00	-.7812E+02	.4410E+03	.0000E+00	.0000E+00	.0000E+00
247	.0000E+00	-.7812E+02	.4410E+03	.0000E+00	.0000E+00	.0000E+00
248	.0000E+00	-.7378E+02	.4165E+03	.0000E+00	.0000E+00	.0000E+00
249	.0000E+00	-.6076E+02	.3430E+03	.0000E+00	.0000E+00	.0000E+00
250	.0000E+00	-.4991E+02	.2818E+03	.0000E+00	.0000E+00	.0000E+00
251	.0000E+00	-.6510E+02	.3675E+03	.0000E+00	.0000E+00	.0000E+00
252	.0000E+00	-.8029E+02	.4533E+03	.0000E+00	.0000E+00	.0000E+00
253	.0000E+00	-.7812E+02	.4410E+03	.0000E+00	.0000E+00	.0000E+00
254	.0000E+00	-.6944E+02	.3920E+03	.0000E+00	.0000E+00	.0000E+00
255	.0000E+00	-.5642E+02	.3185E+03	.0000E+00	.0000E+00	.0000E+00
256	.0000E+00	-.5208E+02	.2940E+03	.0000E+00	.0000E+00	.0000E+00
257	.0000E+00	-.6076E+02	.3430E+03	.0000E+00	.0000E+00	.0000E+00
258	.0000E+00	-.7378E+02	.4165E+03	.0000E+00	.0000E+00	.0000E+00
259	.0000E+00	-.9111E+02	.5142E+03	.0000E+00	.0000E+00	.0000E+00
260	.0000E+00	-.5205E+02	.2937E+03	.0000E+00	.0000E+00	.0000E+00
261	.0000E+00	-.4123E+02	.0000E+00	.0000E+00	.0000E+00	.0000E+00
262	.0000E+00	-.8897E+02	.0000E+00	.0000E+00	.0000E+00	.0000E+00
263	.0000E+00	-.9548E+02	.0000E+00	.0000E+00	.0000E+00	.0000E+00
264	.0000E+00	-.9548E+02	.0000E+00	.0000E+00	.0000E+00	.0000E+00
265	.0000E+00	-.8680E+02	.0000E+00	.0000E+00	.0000E+00	.0000E+00
266	.0000E+00	-.7812E+02	.0000E+00	.0000E+00	.0000E+00	.0000E+00
267	.0000E+00	-.7812E+02	.0000E+00	.0000E+00	.0000E+00	.0000E+00
268	.0000E+00	-.7378E+02	.0000E+00	.0000E+00	.0000E+00	.0000E+00
269	.0000E+00	-.6076E+02	.0000E+00	.0000E+00	.0000E+00	.0000E+00
270	.0000E+00	-.4991E+02	.0000E+00	.0000E+00	.0000E+00	.0000E+00
271	.0000E+00	-.6510E+02	.0000E+00	.0000E+00	.0000E+00	.0000E+00
272	.0000E+00	-.8029E+02	.0000E+00	.0000E+00	.0000E+00	.0000E+00
273	.0000E+00	-.7812E+02	.0000E+00	.0000E+00	.0000E+00	.0000E+00
274	.0000E+00	-.6944E+02	.0000E+00	.0000E+00	.0000E+00	.0000E+00
275	.0000E+00	-.5642E+02	.0000E+00	.0000E+00	.0000E+00	.0000E+00

========== I M A G E S 3 D ==========
= Copyright (c) 1984 Celestial Software Inc. =
==========

SOLVE DISPLACEMENTS Version 2.0 07/01/90

L O A D C A S E 1

DEAD LOAD, D

APPLIED LOAD VECTOR

Node	Fx	Fy	Fz	Mx	My	Mz
276	.0000E+00	-.5208E+02	.0000E+00	.0000E+00	.0000E+00	.0000E+00
277	.0000E+00	-.6076E+02	.0000E+00	.0000E+00	.0000E+00	.0000E+00
278	.0000E+00	-.7378E+02	.0000E+00	.0000E+00	.0000E+00	.0000E+00
279	.0000E+00	-.9330E+02	.0000E+00	.0000E+00	.0000E+00	.0000E+00
280	.0000E+00	-.5424E+02	.0000E+00	.0000E+00	.0000E+00	.0000E+00
281	.0000E+00	-.2134E+02	.0000E+00	.0000E+00	.0000E+00	.0000E+00
282	.0000E+00	-.4521E+02	.0000E+00	.0000E+00	.0000E+00	.0000E+00
283	.0000E+00	-.4774E+02	.0000E+00	.0000E+00	.0000E+00	.0000E+00
284	.0000E+00	-.4774E+02	.0000E+00	.0000E+00	.0000E+00	.0000E+00
285	.0000E+00	-.4340E+02	.0000E+00	.0000E+00	.0000E+00	.0000E+00
286	.0000E+00	-.3906E+02	.0000E+00	.0000E+00	.0000E+00	.0000E+00
287	.0000E+00	-.3906E+02	.0000E+00	.0000E+00	.0000E+00	.0000E+00
288	.0000E+00	-.3689E+02	.0000E+00	.0000E+00	.0000E+00	.0000E+00
289	.0000E+00	-.3038E+02	.0000E+00	.0000E+00	.0000E+00	.0000E+00
290	.0000E+00	-.2496E+02	.0000E+00	.0000E+00	.0000E+00	.0000E+00
291	.0000E+00	-.3255E+02	.0000E+00	.0000E+00	.0000E+00	.0000E+00
292	.0000E+00	-.4015E+02	.0000E+00	.0000E+00	.0000E+00	.0000E+00
293	.0000E+00	-.3906E+02	.0000E+00	.0000E+00	.0000E+00	.0000E+00
294	.0000E+00	-.3472E+02	.0000E+00	.0000E+00	.0000E+00	.0000E+00
295	.0000E+00	-.2821E+02	.0000E+00	.0000E+00	.0000E+00	.0000E+00
296	.0000E+00	-.2604E+02	.0000E+00	.0000E+00	.0000E+00	.0000E+00
297	.0000E+00	-.3038E+02	.0000E+00	.0000E+00	.0000E+00	.0000E+00
298	.0000E+00	-.3689E+02	.0000E+00	.0000E+00	.0000E+00	.0000E+00
299	.0000E+00	-.4738E+02	.0000E+00	.0000E+00	.0000E+00	.0000E+00
300	.0000E+00	-.2785E+02	.0000E+00	.0000E+00	.0000E+00	.0000E+00

========== I M A G E S 3 D ==========
= Copyright (c) 1984 Celestial Software Inc. =
==========

SOLVE DISPLACEMENTS Version 2.0 07/01/90

L O A D C A S E 2

LIVE LOAD, L - OVERBURDEN PRESSURE

APPLIED LOAD VECTOR

Node	Fx	Fy	Fz	Mx	My	Mz
1	.0000E+00	.0000E+00	.2160E+01	.0000E+00	.0000E+00	.0000E+00
2	.0000E+00	.0000E+00	.4320E+01	.0000E+00	.0000E+00	.0000E+00
3	.0000E+00	.0000E+00	.4320E+01	.0000E+00	.0000E+00	.0000E+00
4	.0000E+00	.0000E+00	.4320E+01	.0000E+00	.0000E+00	.0000E+00
5	.0000E+00	.0000E+00	.4320E+01	.0000E+00	.0000E+00	.0000E+00
6	.0000E+00	.0000E+00	.4320E+01	.0000E+00	.0000E+00	.0000E+00
7	.0000E+00	.0000E+00	.4320E+01	.0000E+00	.0000E+00	.0000E+00
8	.0000E+00	.0000E+00	.4080E+01	.0000E+00	.0000E+00	.0000E+00
9	.0000E+00	.0000E+00	.3360E+01	.0000E+00	.0000E+00	.0000E+00
10	.0000E+00	.0000E+00	.2760E+01	.0000E+00	.0000E+00	.0000E+00
11	.0000E+00	.0000E+00	.3600E+01	.0000E+00	.0000E+00	.0000E+00
12	.0000E+00	.0000E+00	.4440E+01	.0000E+00	.0000E+00	.0000E+00
13	.0000E+00	.0000E+00	.4320E+01	.0000E+00	.0000E+00	.0000E+00
14	.0000E+00	.0000E+00	.3840E+01	.0000E+00	.0000E+00	.0000E+00
15	.0000E+00	.0000E+00	.3120E+01	.0000E+00	.0000E+00	.0000E+00
16	.0000E+00	.0000E+00	.2880E+01	.0000E+00	.0000E+00	.0000E+00
17	.0000E+00	.0000E+00	.3360E+01	.0000E+00	.0000E+00	.0000E+00
18	.0000E+00	.0000E+00	.3480E+01	.0000E+00	.0000E+00	.0000E+00
19	.0000E+00	.0000E+00	.3120E+01	.0000E+00	.0000E+00	.0000E+00
20	.0000E+00	.0000E+00	.1560E+01	.0000E+00	.0000E+00	.0000E+00
21	.0000E+00	.0000E+00	.4320E+01	.0000E+00	.0000E+00	.0000E+00
22	.0000E+00	.0000E+00	.8640E+01	.0000E+00	.0000E+00	.0000E+00
23	.0000E+00	.0000E+00	.8640E+01	.0000E+00	.0000E+00	.0000E+00
24	.0000E+00	.0000E+00	.8640E+01	.0000E+00	.0000E+00	.0000E+00
25	.0000E+00	.0000E+00	.8640E+01	.0000E+00	.0000E+00	.0000E+00
26	.0000E+00	.0000E+00	.8640E+01	.0000E+00	.0000E+00	.0000E+00
27	.0000E+00	.0000E+00	.8640E+01	.0000E+00	.0000E+00	.0000E+00
28	.0000E+00	.0000E+00	.8160E+01	.0000E+00	.0000E+00	.0000E+00
29	.0000E+00	.0000E+00	.6720E+01	.0000E+00	.0000E+00	.0000E+00
30	.0000E+00	.0000E+00	.5520E+01	.0000E+00	.0000E+00	.0000E+00
31	.0000E+00	.0000E+00	.7200E+01	.0000E+00	.0000E+00	.0000E+00
32	.0000E+00	.0000E+00	.8880E+01	.0000E+00	.0000E+00	.0000E+00
33	.0000E+00	.0000E+00	.8640E+01	.0000E+00	.0000E+00	.0000E+00
34	.0000E+00	.0000E+00	.7680E+01	.0000E+00	.0000E+00	.0000E+00
35	.0000E+00	.0000E+00	.6240E+01	.0000E+00	.0000E+00	.0000E+00

I M A G E S 3 D

= Copyright (c) 1984 Celestial Software Inc. =

SOLVE DISPLACEMENTS Version 2.0 07/01/90

L O A D C A S E 2

LIVE LOAD, L - OVERBURDEN PRESSURE

APPLIED LOAD VECTOR

Node	Fx	Fy	Fz	Mx	My	Mz
36	.0000E+00	.0000E+00	.5760E+01	.0000E+00	.0000E+00	.0000E+00
37	.0000E+00	.0000E+00	.6720E+01	.0000E+00	.0000E+00	.0000E+00
38	.0000E+00	.0000E+00	.6960E+01	.0000E+00	.0000E+00	.0000E+00
39	.0000E+00	.0000E+00	.6240E+01	.0000E+00	.0000E+00	.0000E+00
40	.0000E+00	.0000E+00	.3120E+01	.0000E+00	.0000E+00	.0000E+00
41	.0000E+00	.0000E+00	.4320E+01	.0000E+00	.0000E+00	.0000E+00
42	.0000E+00	.0000E+00	.8640E+01	.0000E+00	.0000E+00	.0000E+00
43	.0000E+00	.0000E+00	.8640E+01	.0000E+00	.0000E+00	.0000E+00
44	.0000E+00	.0000E+00	.8640E+01	.0000E+00	.0000E+00	.0000E+00
45	.0000E+00	.0000E+00	.8640E+01	.0000E+00	.0000E+00	.0000E+00
46	.0000E+00	.0000E+00	.8640E+01	.0000E+00	.0000E+00	.0000E+00
47	.0000E+00	.0000E+00	.8640E+01	.0000E+00	.0000E+00	.0000E+00
48	.0000E+00	.0000E+00	.8160E+01	.0000E+00	.0000E+00	.0000E+00
49	.0000E+00	.0000E+00	.6720E+01	.0000E+00	.0000E+00	.0000E+00
50	.0000E+00	.0000E+00	.5520E+01	.0000E+00	.0000E+00	.0000E+00
51	.0000E+00	.0000E+00	.7200E+01	.0000E+00	.0000E+00	.0000E+00
52	.0000E+00	.0000E+00	.8880E+01	.0000E+00	.0000E+00	.0000E+00
53	.0000E+00	.0000E+00	.8640E+01	.0000E+00	.0000E+00	.0000E+00
54	.0000E+00	.0000E+00	.7680E+01	.0000E+00	.0000E+00	.0000E+00
55	.0000E+00	.0000E+00	.6240E+01	.0000E+00	.0000E+00	.0000E+00
56	.0000E+00	.0000E+00	.5760E+01	.0000E+00	.0000E+00	.0000E+00
57	.0000E+00	.0000E+00	.6720E+01	.0000E+00	.0000E+00	.0000E+00
58	.0000E+00	.0000E+00	.6960E+01	.0000E+00	.0000E+00	.0000E+00
59	.0000E+00	.0000E+00	.6240E+01	.0000E+00	.0000E+00	.0000E+00
60	.0000E+00	.0000E+00	.3120E+01	.0000E+00	.0000E+00	.0000E+00
61	.0000E+00	.0000E+00	.4320E+01	.0000E+00	.0000E+00	.0000E+00
62	.0000E+00	.0000E+00	.8640E+01	.0000E+00	.0000E+00	.0000E+00
63	.0000E+00	.0000E+00	.8640E+01	.0000E+00	.0000E+00	.0000E+00
64	.0000E+00	.0000E+00	.8640E+01	.0000E+00	.0000E+00	.0000E+00
65	.0000E+00	.0000E+00	.8640E+01	.0000E+00	.0000E+00	.0000E+00
66	.0000E+00	.0000E+00	.8640E+01	.0000E+00	.0000E+00	.0000E+00
67	.0000E+00	.0000E+00	.8640E+01	.0000E+00	.0000E+00	.0000E+00
68	.0000E+00	.0000E+00	.8160E+01	.0000E+00	.0000E+00	.0000E+00
69	.0000E+00	.0000E+00	.6720E+01	.0000E+00	.0000E+00	.0000E+00
70	.0000E+00	.0000E+00	.5520E+01	.0000E+00	.0000E+00	.0000E+00
71	.0000E+00	.0000E+00	.7200E+01	.0000E+00	.0000E+00	.0000E+00
72	.0000E+00	.0000E+00	.8880E+01	.0000E+00	.0000E+00	.0000E+00
73	.0000E+00	.0000E+00	.8640E+01	.0000E+00	.0000E+00	.0000E+00
74	.0000E+00	.0000E+00	.7680E+01	.0000E+00	.0000E+00	.0000E+00
75	.0000E+00	.0000E+00	.6240E+01	.0000E+00	.0000E+00	.0000E+00

I M A G E S 3 D

= Copyright (c) 1984 Celestial Software Inc. =

SOLVE DISPLACEMENTS Version 2.0 07/01/90

L O A D C A S E 2

LIVE LOAD, L - OVERBURDEN PRESSURE

APPLIED LOAD VECTOR

Node	Fx	Fy	Fz	Mx	My	Mz
76	.0000E+00	.0000E+00	.5760E+01	.0000E+00	.0000E+00	.0000E+00
77	.0000E+00	.0000E+00	.6720E+01	.0000E+00	.0000E+00	.0000E+00
78	.0000E+00	.0000E+00	.6960E+01	.0000E+00	.0000E+00	.0000E+00
79	.0000E+00	.0000E+00	.6240E+01	.0000E+00	.0000E+00	.0000E+00
80	.0000E+00	.0000E+00	.3120E+01	.0000E+00	.0000E+00	.0000E+00
81	.0000E+00	.0000E+00	.3780E+01	.0000E+00	.0000E+00	.0000E+00
82	.0000E+00	.0000E+00	.7560E+01	.0000E+00	.0000E+00	.0000E+00
83	.0000E+00	.0000E+00	.7560E+01	.0000E+00	.0000E+00	.0000E+00
84	.0000E+00	.0000E+00	.7560E+01	.0000E+00	.0000E+00	.0000E+00
85	.0000E+00	.0000E+00	.7560E+01	.0000E+00	.0000E+00	.0000E+00
86	.0000E+00	.0000E+00	.7560E+01	.0000E+00	.0000E+00	.0000E+00
87	.0000E+00	.0000E+00	.7560E+01	.0000E+00	.0000E+00	.0000E+00
88	.0000E+00	.0000E+00	.7140E+01	.0000E+00	.0000E+00	.0000E+00
89	.0000E+00	.0000E+00	.5880E+01	.0000E+00	.0000E+00	.0000E+00
90	.0000E+00	.0000E+00	.4830E+01	.0000E+00	.0000E+00	.0000E+00
91	.0000E+00	.0000E+00	.6300E+01	.0000E+00	.0000E+00	.0000E+00
92	.0000E+00	.0000E+00	.7770E+01	.0000E+00	.0000E+00	.0000E+00
93	.0000E+00	.0000E+00	.7560E+01	.0000E+00	.0000E+00	.0000E+00
94	.0000E+00	.0000E+00	.6720E+01	.0000E+00	.0000E+00	.0000E+00
95	.0000E+00	.0000E+00	.5460E+01	.0000E+00	.0000E+00	.0000E+00
96	.0000E+00	.0000E+00	.5040E+01	.0000E+00	.0000E+00	.0000E+00
97	.0000E+00	.0000E+00	.5880E+01	.0000E+00	.0000E+00	.0000E+00
98	.0000E+00	.0000E+00	.6090E+01	.0000E+00	.0000E+00	.0000E+00
99	.0000E+00	.0000E+00	.5460E+01	.0000E+00	.0000E+00	.0000E+00
100	.0000E+00	.0000E+00	.2730E+01	.0000E+00	.0000E+00	.0000E+00
101	.0000E+00	.0000E+00	.2970E+01	.0000E+00	.0000E+00	.0000E+00
102	.0000E+00	.0000E+00	.5940E+01	.0000E+00	.0000E+00	.0000E+00
103	.0000E+00	.0000E+00	.5940E+01	.0000E+00	.0000E+00	.0000E+00
104	.0000E+00	.0000E+00	.5940E+01	.0000E+00	.0000E+00	.0000E+00
105	.0000E+00	.0000E+00	.5940E+01	.0000E+00	.0000E+00	.0000E+00
106	.0000E+00	.0000E+00	.5940E+01	.0000E+00	.0000E+00	.0000E+00
107	.0000E+00	.0000E+00	.5940E+01	.0000E+00	.0000E+00	.0000E+00
108	.0000E+00	.0000E+00	.5610E+01	.0000E+00	.0000E+00	.0000E+00
109	.0000E+00	.0000E+00	.4620E+01	.0000E+00	.0000E+00	.0000E+00
110	.0000E+00	.0000E+00	.3795E+01	.0000E+00	.0000E+00	.0000E+00
111	.0000E+00	.0000E+00	.4950E+01	.0000E+00	.0000E+00	.0000E+00
112	.0000E+00	.0000E+00	.6105E+01	.0000E+00	.0000E+00	.0000E+00
113	.0000E+00	.0000E+00	.5940E+01	.0000E+00	.0000E+00	.0000E+00
114	.0000E+00	.0000E+00	.5280E+01	.0000E+00	.0000E+00	.0000E+00
115	.0000E+00	.0000E+00	.4290E+01	.0000E+00	.0000E+00	.0000E+00

IMAGES 3D

= Copyright (c) 1984 Celestial Software Inc. =

SOLVE DISPLACEMENTS Version 2.0 07/01/90

LOAD CASE 2

LIVE LOAD, L - OVERBURDEN PRESSURE

APPLIED LOAD VECTOR

Node	Fx	Fy	Fz	Mx	My	Mz
116	.0000E+00	.0000E+00	.3960E+01	.0000E+00	.0000E+00	.0000E+00
117	.0000E+00	.0000E+00	.4620E+01	.0000E+00	.0000E+00	.0000E+00
118	.0000E+00	.0000E+00	.4785E+01	.0000E+00	.0000E+00	.0000E+00
119	.0000E+00	.0000E+00	.4290E+01	.0000E+00	.0000E+00	.0000E+00
120	.0000E+00	.0000E+00	.2145E+01	.0000E+00	.0000E+00	.0000E+00
121	.0000E+00	.0000E+00	.3510E+01	.0000E+00	.0000E+00	.0000E+00
122	.0000E+00	.0000E+00	.7020E+01	.0000E+00	.0000E+00	.0000E+00
123	.0000E+00	.0000E+00	.7020E+01	.0000E+00	.0000E+00	.0000E+00
124	.0000E+00	.0000E+00	.7020E+01	.0000E+00	.0000E+00	.0000E+00
125	.0000E+00	.0000E+00	.7020E+01	.0000E+00	.0000E+00	.0000E+00
126	.0000E+00	.0000E+00	.7020E+01	.0000E+00	.0000E+00	.0000E+00
127	.0000E+00	.0000E+00	.7020E+01	.0000E+00	.0000E+00	.0000E+00
128	.0000E+00	.0000E+00	.6630E+01	.0000E+00	.0000E+00	.0000E+00
129	.0000E+00	.0000E+00	.5460E+01	.0000E+00	.0000E+00	.0000E+00
130	.0000E+00	.0000E+00	.4485E+01	.0000E+00	.0000E+00	.0000E+00
131	.0000E+00	.0000E+00	.5850E+01	.0000E+00	.0000E+00	.0000E+00
132	.0000E+00	.0000E+00	.7215E+01	.0000E+00	.0000E+00	.0000E+00
133	.0000E+00	.0000E+00	.7020E+01	.0000E+00	.0000E+00	.0000E+00
134	.0000E+00	.0000E+00	.6240E+01	.0000E+00	.0000E+00	.0000E+00
135	.0000E+00	.0000E+00	.5070E+01	.0000E+00	.0000E+00	.0000E+00
136	.0000E+00	.0000E+00	.4680E+01	.0000E+00	.0000E+00	.0000E+00
137	.0000E+00	.0000E+00	.5460E+01	.0000E+00	.0000E+00	.0000E+00
138	.0000E+00	.0000E+00	.5655E+01	.0000E+00	.0000E+00	.0000E+00
139	.0000E+00	.0000E+00	.5070E+01	.0000E+00	.0000E+00	.0000E+00
140	.0000E+00	.0000E+00	.2535E+01	.0000E+00	.0000E+00	.0000E+00
141	.0000E+00	.0000E+00	.3544E+01	.0000E+00	.0000E+00	.0000E+00
142	.0000E+00	.0000E+00	.7087E+01	.0000E+00	.0000E+00	.0000E+00
143	.0000E+00	.0000E+00	.7087E+01	.0000E+00	.0000E+00	.0000E+00
144	.0000E+00	.0000E+00	.7087E+01	.0000E+00	.0000E+00	.0000E+00
145	.0000E+00	.0000E+00	.7087E+01	.0000E+00	.0000E+00	.0000E+00
146	.0000E+00	.0000E+00	.7087E+01	.0000E+00	.0000E+00	.0000E+00
147	.0000E+00	.0000E+00	.7087E+01	.0000E+00	.0000E+00	.0000E+00
148	.0000E+00	.0000E+00	.6694E+01	.0000E+00	.0000E+00	.0000E+00
149	.0000E+00	.0000E+00	.5512E+01	.0000E+00	.0000E+00	.0000E+00
150	.0000E+00	.0000E+00	.4528E+01	.0000E+00	.0000E+00	.0000E+00
151	.0000E+00	.0000E+00	.5906E+01	.0000E+00	.0000E+00	.0000E+00
152	.0000E+00	.0000E+00	.7284E+01	.0000E+00	.0000E+00	.0000E+00
153	.0000E+00	.0000E+00	.7087E+01	.0000E+00	.0000E+00	.0000E+00
154	.0000E+00	.0000E+00	.6300E+01	.0000E+00	.0000E+00	.0000E+00
155	.0000E+00	.0000E+00	.5119E+01	.0000E+00	.0000E+00	.0000E+00

IMAGES 3D

= Copyright (c) 1984 Celestial Software Inc. =

SOLVE DISPLACEMENTS Version 2.0 07/01/90

LOAD CASE 2

LIVE LOAD, L - OVERBURDEN PRESSURE

APPLIED LOAD VECTOR

Node	Fx	Fy	Fz	Mx	My	Mz
156	.0000E+00	.0000E+00	.4725E+01	.0000E+00	.0000E+00	.0000E+00
157	.0000E+00	.0000E+00	.5512E+01	.0000E+00	.0000E+00	.0000E+00
158	.0000E+00	.0000E+00	.5961E+01	.0000E+00	.0000E+00	.0000E+00
159	.0000E+00	.0000E+00	.6378E+01	.0000E+00	.0000E+00	.0000E+00
160	.0000E+00	.0000E+00	.3315E+01	.0000E+00	.0000E+00	.0000E+00
161	.0000E+00	.0000E+00	.3510E+01	.0000E+00	.0000E+00	.0000E+00
162	.0000E+00	.0000E+00	.7020E+01	.0000E+00	.0000E+00	.0000E+00
163	.0000E+00	.0000E+00	.7020E+01	.0000E+00	.0000E+00	.0000E+00
164	.0000E+00	.0000E+00	.7020E+01	.0000E+00	.0000E+00	.0000E+00
165	.0000E+00	.0000E+00	.7020E+01	.0000E+00	.0000E+00	.0000E+00
166	.0000E+00	.0000E+00	.7020E+01	.0000E+00	.0000E+00	.0000E+00
167	.0000E+00	.0000E+00	.7020E+01	.0000E+00	.0000E+00	.0000E+00
168	.0000E+00	.0000E+00	.6630E+01	.0000E+00	.0000E+00	.0000E+00
169	.0000E+00	.0000E+00	.5460E+01	.0000E+00	.0000E+00	.0000E+00
170	.0000E+00	.0000E+00	.4485E+01	.0000E+00	.0000E+00	.0000E+00
171	.0000E+00	.0000E+00	.5850E+01	.0000E+00	.0000E+00	.0000E+00
172	.0000E+00	.0000E+00	.7215E+01	.0000E+00	.0000E+00	.0000E+00
173	.0000E+00	.0000E+00	.7020E+01	.0000E+00	.0000E+00	.0000E+00
174	.0000E+00	.0000E+00	.6240E+01	.0000E+00	.0000E+00	.0000E+00
175	.0000E+00	.0000E+00	.5070E+01	.0000E+00	.0000E+00	.0000E+00
176	.0000E+00	.0000E+00	.4680E+01	.0000E+00	.0000E+00	.0000E+00
177	.0000E+00	.0000E+00	.5460E+01	.0000E+00	.0000E+00	.0000E+00
178	.0000E+00	.0000E+00	.5655E+01	.0000E+00	.0000E+00	.0000E+00
179	.0000E+00	.0000E+00	.5141E+01	.0000E+00	.0000E+00	.0000E+00
180	.0000E+00	.0000E+00	.2606E+01	.0000E+00	.0000E+00	.0000E+00
181	.0000E+00	.0000E+00	.4077E+01	.0000E+00	.0000E+00	.0000E+00
182	.0000E+00	.0000E+00	.8523E+01	.0000E+00	.0000E+00	.0000E+00
183	.0000E+00	.0000E+00	.8892E+01	.0000E+00	.0000E+00	.0000E+00
184	.0000E+00	.0000E+00	.8892E+01	.0000E+00	.0000E+00	.0000E+00
185	.0000E+00	.0000E+00	.8732E+01	.0000E+00	.0000E+00	.0000E+00
186	.0000E+00	.0000E+00	.8572E+01	.0000E+00	.0000E+00	.0000E+00
187	.0000E+00	.0000E+00	.8572E+01	.0000E+00	.0000E+00	.0000E+00
188	.0000E+00	.0000E+00	.8096E+01	.0000E+00	.0000E+00	.0000E+00
189	.0000E+00	.0000E+00	.6667E+01	.0000E+00	.0000E+00	.0000E+00
190	.0000E+00	.0000E+00	.5477E+01	.0000E+00	.0000E+00	.0000E+00
191	.0000E+00	.0000E+00	.7144E+01	.0000E+00	.0000E+00	.0000E+00
192	.0000E+00	.0000E+00	.8811E+01	.0000E+00	.0000E+00	.0000E+00
193	.0000E+00	.0000E+00	.8572E+01	.0000E+00	.0000E+00	.0000E+00
194	.0000E+00	.0000E+00	.7620E+01	.0000E+00	.0000E+00	.0000E+00
195	.0000E+00	.0000E+00	.6191E+01	.0000E+00	.0000E+00	.0000E+00

========== I M A G E S 3 D ==========
= Copyright (c) 1984 Celestial Software Inc. =
==========

SOLVE DISPLACEMENTS Version 2.0 07/01/90

L O A D C A S E 2
LIVE LOAD, L - OVERBURDEN PRESSURE

APPLIED LOAD VECTOR

Node	Fx	Fy	Fz	Mx	My	Mz
196	.0000E+00	.0000E+00	.5715E+01	.0000E+00	.0000E+00	.0000E+00
197	.0000E+00	.0000E+00	.6667E+01	.0000E+00	.0000E+00	.0000E+00
198	.0000E+00	.0000E+00	.6854E+01	.0000E+00	.0000E+00	.0000E+00
199	.0000E+00	.0000E+00	.5779E+01	.0000E+00	.0000E+00	.0000E+00
200	.0000E+00	.0000E+00	.2987E+01	.0000E+00	.0000E+00	.0000E+00
201	.0000E+00	.0000E+00	.2805E+01	.0000E+00	.0000E+00	.0000E+00
202	.0000E+00	.0000E+00	.6935E+01	.0000E+00	.0000E+00	.0000E+00
203	.0000E+00	.0000E+00	.8260E+01	.0000E+00	.0000E+00	.0000E+00
204	.0000E+00	.0000E+00	.8260E+01	.0000E+00	.0000E+00	.0000E+00
205	.0000E+00	.0000E+00	.7640E+01	.0000E+00	.0000E+00	.0000E+00
206	.0000E+00	.0000E+00	.7020E+01	.0000E+00	.0000E+00	.0000E+00
207	.0000E+00	.0000E+00	.7020E+01	.0000E+00	.0000E+00	.0000E+00
208	.0000E+00	.0000E+00	.6630E+01	.0000E+00	.0000E+00	.0000E+00
209	.0000E+00	.0000E+00	.5460E+01	.0000E+00	.0000E+00	.0000E+00
210	.0000E+00	.0000E+00	.4485E+01	.0000E+00	.0000E+00	.0000E+00
211	.0000E+00	.0000E+00	.5850E+01	.0000E+00	.0000E+00	.0000E+00
212	.0000E+00	.0000E+00	.7215E+01	.0000E+00	.0000E+00	.0000E+00
213	.0000E+00	.0000E+00	.7020E+01	.0000E+00	.0000E+00	.0000E+00
214	.0000E+00	.0000E+00	.6240E+01	.0000E+00	.0000E+00	.0000E+00
215	.0000E+00	.0000E+00	.5070E+01	.0000E+00	.0000E+00	.0000E+00
216	.0000E+00	.0000E+00	.4680E+01	.0000E+00	.0000E+00	.0000E+00
217	.0000E+00	.0000E+00	.5460E+01	.0000E+00	.0000E+00	.0000E+00
218	.0000E+00	.0000E+00	.6630E+01	.0000E+00	.0000E+00	.0000E+00
219	.0000E+00	.0000E+00	.6963E+01	.0000E+00	.0000E+00	.0000E+00
220	.0000E+00	.0000E+00	.3653E+01	.0000E+00	.0000E+00	.0000E+00
221	.0000E+00	.0000E+00	.3249E+01	.0000E+00	.0000E+00	.0000E+00
222	.0000E+00	.0000E+00	.7539E+01	.0000E+00	.0000E+00	.0000E+00
223	.0000E+00	.0000E+00	.8580E+01	.0000E+00	.0000E+00	.0000E+00
224	.0000E+00	.0000E+00	.8580E+01	.0000E+00	.0000E+00	.0000E+00
225	.0000E+00	.0000E+00	.7800E+01	.0000E+00	.0000E+00	.0000E+00
226	.0000E+00	.0000E+00	.7020E+01	.0000E+00	.0000E+00	.0000E+00
227	.0000E+00	.0000E+00	.7020E+01	.0000E+00	.0000E+00	.0000E+00
228	.0000E+00	.0000E+00	.6630E+01	.0000E+00	.0000E+00	.0000E+00
229	.0000E+00	.0000E+00	.5460E+01	.0000E+00	.0000E+00	.0000E+00
230	.0000E+00	.0000E+00	.4485E+01	.0000E+00	.0000E+00	.0000E+00
231	.0000E+00	.0000E+00	.5850E+01	.0000E+00	.0000E+00	.0000E+00
232	.0000E+00	.0000E+00	.7215E+01	.0000E+00	.0000E+00	.0000E+00
233	.0000E+00	.0000E+00	.7020E+01	.0000E+00	.0000E+00	.0000E+00
234	.0000E+00	.0000E+00	.6240E+01	.0000E+00	.0000E+00	.0000E+00
235	.0000E+00	.0000E+00	.5070E+01	.0000E+00	.0000E+00	.0000E+00

========== I M A G E S 3 D ==========
= Copyright (c) 1984 Celestial Software Inc. =
==========

SOLVE DISPLACEMENTS Version 2.0 07/01/90

L O A D C A S E 2
LIVE LOAD, L - OVERBURDEN PRESSURE

APPLIED LOAD VECTOR

Node	Fx	Fy	Fz	Mx	My	Mz
236	.0000E+00	.0000E+00	.4680E+01	.0000E+00	.0000E+00	.0000E+00
237	.0000E+00	.0000E+00	.5460E+01	.0000E+00	.0000E+00	.0000E+00
238	.0000E+00	.0000E+00	.6630E+01	.0000E+00	.0000E+00	.0000E+00
239	.0000E+00	.0000E+00	.7924E+01	.0000E+00	.0000E+00	.0000E+00
240	.0000E+00	.0000E+00	.4414E+01	.0000E+00	.0000E+00	.0000E+00
241	.0000E+00	.0000E+00	.4320E+01	.0000E+00	.0000E+00	.0000E+00
242	.0000E+00	.0000E+00	.9600E+01	.0000E+00	.0000E+00	.0000E+00
243	.0000E+00	.0000E+00	.1056E+02	.0000E+00	.0000E+00	.0000E+00
244	.0000E+00	.0000E+00	.1056E+02	.0000E+00	.0000E+00	.0000E+00
245	.0000E+00	.0000E+00	.9600E+01	.0000E+00	.0000E+00	.0000E+00
246	.0000E+00	.0000E+00	.8640E+01	.0000E+00	.0000E+00	.0000E+00
247	.0000E+00	.0000E+00	.8640E+01	.0000E+00	.0000E+00	.0000E+00
248	.0000E+00	.0000E+00	.8160E+01	.0000E+00	.0000E+00	.0000E+00
249	.0000E+00	.0000E+00	.6720E+01	.0000E+00	.0000E+00	.0000E+00
250	.0000E+00	.0000E+00	.5520E+01	.0000E+00	.0000E+00	.0000E+00
251	.0000E+00	.0000E+00	.7200E+01	.0000E+00	.0000E+00	.0000E+00
252	.0000E+00	.0000E+00	.8880E+01	.0000E+00	.0000E+00	.0000E+00
253	.0000E+00	.0000E+00	.8640E+01	.0000E+00	.0000E+00	.0000E+00
254	.0000E+00	.0000E+00	.7680E+01	.0000E+00	.0000E+00	.0000E+00
255	.0000E+00	.0000E+00	.6240E+01	.0000E+00	.0000E+00	.0000E+00
256	.0000E+00	.0000E+00	.5760E+01	.0000E+00	.0000E+00	.0000E+00
257	.0000E+00	.0000E+00	.6720E+01	.0000E+00	.0000E+00	.0000E+00
258	.0000E+00	.0000E+00	.8160E+01	.0000E+00	.0000E+00	.0000E+00
259	.0000E+00	.0000E+00	.1008E+02	.0000E+00	.0000E+00	.0000E+00
260	.0000E+00	.0000E+00	.5756E+01	.0000E+00	.0000E+00	.0000E+00
261	.0000E+00	.0000E+00	.2240E+01	.0000E+00	.0000E+00	.0000E+00
262	.0000E+00	.0000E+00	.4880E+01	.0000E+00	.0000E+00	.0000E+00
263	.0000E+00	.0000E+00	.5280E+01	.0000E+00	.0000E+00	.0000E+00
264	.0000E+00	.0000E+00	.5280E+01	.0000E+00	.0000E+00	.0000E+00
265	.0000E+00	.0000E+00	.4800E+01	.0000E+00	.0000E+00	.0000E+00
266	.0000E+00	.0000E+00	.4320E+01	.0000E+00	.0000E+00	.0000E+00
267	.0000E+00	.0000E+00	.4320E+01	.0000E+00	.0000E+00	.0000E+00
268	.0000E+00	.0000E+00	.4080E+01	.0000E+00	.0000E+00	.0000E+00
269	.0000E+00	.0000E+00	.3360E+01	.0000E+00	.0000E+00	.0000E+00
270	.0000E+00	.0000E+00	.2760E+01	.0000E+00	.0000E+00	.0000E+00
271	.0000E+00	.0000E+00	.3600E+01	.0000E+00	.0000E+00	.0000E+00
272	.0000E+00	.0000E+00	.4440E+01	.0000E+00	.0000E+00	.0000E+00
273	.0000E+00	.0000E+00	.4320E+01	.0000E+00	.0000E+00	.0000E+00
274	.0000E+00	.0000E+00	.3840E+01	.0000E+00	.0000E+00	.0000E+00
275	.0000E+00	.0000E+00	.3120E+01	.0000E+00	.0000E+00	.0000E+00

9514891.1

========== I M A G E S 3 D ==========
= Copyright (c) 1984 Celestial Software Inc. =
==========

SOLVE DISPLACEMENTS Version 2.0 07/01/90

L O A D C A S E 2

LIVE LOAD, L - OVERBURDEN PRESSURE

APPLIED LOAD VECTOR

Node	Fx	Fy	Fz	Mx	My	Mz
276	.0000E+00	.0000E+00	.2880E+01	.0000E+00	.0000E+00	.0000E+00
277	.0000E+00	.0000E+00	.3360E+01	.0000E+00	.0000E+00	.0000E+00
278	.0000E+00	.0000E+00	.4080E+01	.0000E+00	.0000E+00	.0000E+00
279	.0000E+00	.0000E+00	.5119E+01	.0000E+00	.0000E+00	.0000E+00
280	.0000E+00	.0000E+00	.2959E+01	.0000E+00	.0000E+00	.0000E+00

========== I M A G E S 3 D ==========
= Copyright (c) 1984 Celestial Software Inc. =
==========

SOLVE DISPLACEMENTS Version 2.0 07/01/90

L O A D C A S E 3

LATERAL EARTH PRESSURE

APPLIED LOAD VECTOR

Node	Fx	Fy	Fz	Mx	My	Mz
1	.0000E+00	.0000E+00	.4319E+02	.0000E+00	.0000E+00	.0000E+00
2	.0000E+00	.0000E+00	.8637E+02	.0000E+00	.0000E+00	.0000E+00
3	.0000E+00	.0000E+00	.8637E+02	.0000E+00	.0000E+00	.0000E+00
4	.0000E+00	.0000E+00	.8637E+02	.0000E+00	.0000E+00	.0000E+00
5	.0000E+00	.0000E+00	.8637E+02	.0000E+00	.0000E+00	.0000E+00
6	.0000E+00	.0000E+00	.8637E+02	.0000E+00	.0000E+00	.0000E+00
7	.0000E+00	.0000E+00	.8637E+02	.0000E+00	.0000E+00	.0000E+00
8	.0000E+00	.0000E+00	.8157E+02	.0000E+00	.0000E+00	.0000E+00
9	.0000E+00	.0000E+00	.6718E+02	.0000E+00	.0000E+00	.0000E+00
10	.0000E+00	.0000E+00	.5518E+02	.0000E+00	.0000E+00	.0000E+00
11	.0000E+00	.0000E+00	.7198E+02	.0000E+00	.0000E+00	.0000E+00
12	.0000E+00	.0000E+00	.8877E+02	.0000E+00	.0000E+00	.0000E+00
13	.0000E+00	.0000E+00	.8637E+02	.0000E+00	.0000E+00	.0000E+00
14	.0000E+00	.0000E+00	.7677E+02	.0000E+00	.0000E+00	.0000E+00
15	.0000E+00	.0000E+00	.6238E+02	.0000E+00	.0000E+00	.0000E+00
16	.0000E+00	.0000E+00	.5758E+02	.0000E+00	.0000E+00	.0000E+00
17	.0000E+00	.0000E+00	.6718E+02	.0000E+00	.0000E+00	.0000E+00
18	.0000E+00	.0000E+00	.6958E+02	.0000E+00	.0000E+00	.0000E+00
19	.0000E+00	.0000E+00	.6238E+02	.0000E+00	.0000E+00	.0000E+00
20	.0000E+00	.0000E+00	.3119E+02	.0000E+00	.0000E+00	.0000E+00
21	.0000E+00	.0000E+00	.8127E+02	.0000E+00	.0000E+00	.0000E+00
22	.0000E+00	.0000E+00	.1625E+03	.0000E+00	.0000E+00	.0000E+00
23	.0000E+00	.0000E+00	.1625E+03	.0000E+00	.0000E+00	.0000E+00
24	.0000E+00	.0000E+00	.1625E+03	.0000E+00	.0000E+00	.0000E+00
25	.0000E+00	.0000E+00	.1625E+03	.0000E+00	.0000E+00	.0000E+00
26	.0000E+00	.0000E+00	.1625E+03	.0000E+00	.0000E+00	.0000E+00
27	.0000E+00	.0000E+00	.1625E+03	.0000E+00	.0000E+00	.0000E+00
28	.0000E+00	.0000E+00	.1535E+03	.0000E+00	.0000E+00	.0000E+00
29	.0000E+00	.0000E+00	.1264E+03	.0000E+00	.0000E+00	.0000E+00
30	.0000E+00	.0000E+00	.1038E+03	.0000E+00	.0000E+00	.0000E+00
31	.0000E+00	.0000E+00	.1355E+03	.0000E+00	.0000E+00	.0000E+00
32	.0000E+00	.0000E+00	.1671E+03	.0000E+00	.0000E+00	.0000E+00
33	.0000E+00	.0000E+00	.1625E+03	.0000E+00	.0000E+00	.0000E+00
34	.0000E+00	.0000E+00	.1445E+03	.0000E+00	.0000E+00	.0000E+00
35	.0000E+00	.0000E+00	.1174E+03	.0000E+00	.0000E+00	.0000E+00

= I M A G E S 3 D =
= Copyright (c) 1984 Celestial Software Inc. =

SOLVE DISPLACEMENTS Version 2.0 07/01/90

L O A D C A S E 3

LATERAL EARTH PRESSURE

APPLIED LOAD VECTOR

Node	Fx	Fy	Fz	Mx	My	Mz
36	.0000E+00	.0000E+00	.1084E+03	.0000E+00	.0000E+00	.0000E+00
37	.0000E+00	.0000E+00	.1264E+03	.0000E+00	.0000E+00	.0000E+00
38	.0000E+00	.0000E+00	.1309E+03	.0000E+00	.0000E+00	.0000E+00
39	.0000E+00	.0000E+00	.1174E+03	.0000E+00	.0000E+00	.0000E+00
40	.0000E+00	.0000E+00	.5870E+02	.0000E+00	.0000E+00	.0000E+00
41	.0000E+00	.0000E+00	.7362E+02	.0000E+00	.0000E+00	.0000E+00
42	.0000E+00	.0000E+00	.1472E+03	.0000E+00	.0000E+00	.0000E+00
43	.0000E+00	.0000E+00	.1472E+03	.0000E+00	.0000E+00	.0000E+00
44	.0000E+00	.0000E+00	.1472E+03	.0000E+00	.0000E+00	.0000E+00
45	.0000E+00	.0000E+00	.1472E+03	.0000E+00	.0000E+00	.0000E+00
46	.0000E+00	.0000E+00	.1472E+03	.0000E+00	.0000E+00	.0000E+00
47	.0000E+00	.0000E+00	.1472E+03	.0000E+00	.0000E+00	.0000E+00
48	.0000E+00	.0000E+00	.1391E+03	.0000E+00	.0000E+00	.0000E+00
49	.0000E+00	.0000E+00	.1145E+03	.0000E+00	.0000E+00	.0000E+00
50	.0000E+00	.0000E+00	.9407E+02	.0000E+00	.0000E+00	.0000E+00
51	.0000E+00	.0000E+00	.1227E+03	.0000E+00	.0000E+00	.0000E+00
52	.0000E+00	.0000E+00	.1513E+03	.0000E+00	.0000E+00	.0000E+00
53	.0000E+00	.0000E+00	.1472E+03	.0000E+00	.0000E+00	.0000E+00
54	.0000E+00	.0000E+00	.1309E+03	.0000E+00	.0000E+00	.0000E+00
55	.0000E+00	.0000E+00	.1063E+03	.0000E+00	.0000E+00	.0000E+00
56	.0000E+00	.0000E+00	.9816E+02	.0000E+00	.0000E+00	.0000E+00
57	.0000E+00	.0000E+00	.1145E+03	.0000E+00	.0000E+00	.0000E+00
58	.0000E+00	.0000E+00	.1186E+03	.0000E+00	.0000E+00	.0000E+00
59	.0000E+00	.0000E+00	.1063E+03	.0000E+00	.0000E+00	.0000E+00
60	.0000E+00	.0000E+00	.5317E+02	.0000E+00	.0000E+00	.0000E+00
61	.0000E+00	.0000E+00	.6597E+02	.0000E+00	.0000E+00	.0000E+00
62	.0000E+00	.0000E+00	.1319E+03	.0000E+00	.0000E+00	.0000E+00
63	.0000E+00	.0000E+00	.1319E+03	.0000E+00	.0000E+00	.0000E+00
64	.0000E+00	.0000E+00	.1319E+03	.0000E+00	.0000E+00	.0000E+00
65	.0000E+00	.0000E+00	.1319E+03	.0000E+00	.0000E+00	.0000E+00
66	.0000E+00	.0000E+00	.1319E+03	.0000E+00	.0000E+00	.0000E+00
67	.0000E+00	.0000E+00	.1319E+03	.0000E+00	.0000E+00	.0000E+00
68	.0000E+00	.0000E+00	.1246E+03	.0000E+00	.0000E+00	.0000E+00
69	.0000E+00	.0000E+00	.1026E+03	.0000E+00	.0000E+00	.0000E+00
70	.0000E+00	.0000E+00	.8430E+02	.0000E+00	.0000E+00	.0000E+00
71	.0000E+00	.0000E+00	.1100E+03	.0000E+00	.0000E+00	.0000E+00
72	.0000E+00	.0000E+00	.1356E+03	.0000E+00	.0000E+00	.0000E+00
73	.0000E+00	.0000E+00	.1319E+03	.0000E+00	.0000E+00	.0000E+00
74	.0000E+00	.0000E+00	.1173E+03	.0000E+00	.0000E+00	.0000E+00
75	.0000E+00	.0000E+00	.9529E+02	.0000E+00	.0000E+00	.0000E+00

= I M A G E S 3 D =
= Copyright (c) 1984 Celestial Software Inc. =

SOLVE DISPLACEMENTS Version 2.0 07/01/90

L O A D C A S E 3

LATERAL EARTH PRESSURE

APPLIED LOAD VECTOR

Node	Fx	Fy	Fz	Mx	My	Mz
76	.0000E+00	.0000E+00	.8796E+02	.0000E+00	.0000E+00	.0000E+00
77	.0000E+00	.0000E+00	.1026E+03	.0000E+00	.0000E+00	.0000E+00
78	.0000E+00	.0000E+00	.1063E+03	.0000E+00	.0000E+00	.0000E+00
79	.0000E+00	.0000E+00	.9529E+02	.0000E+00	.0000E+00	.0000E+00
80	.0000E+00	.0000E+00	.4765E+02	.0000E+00	.0000E+00	.0000E+00
81	.0000E+00	.0000E+00	.5159E+02	.0000E+00	.0000E+00	.0000E+00
82	.0000E+00	.0000E+00	.1032E+03	.0000E+00	.0000E+00	.0000E+00
83	.0000E+00	.0000E+00	.1032E+03	.0000E+00	.0000E+00	.0000E+00
84	.0000E+00	.0000E+00	.1032E+03	.0000E+00	.0000E+00	.0000E+00
85	.0000E+00	.0000E+00	.1032E+03	.0000E+00	.0000E+00	.0000E+00
86	.0000E+00	.0000E+00	.1032E+03	.0000E+00	.0000E+00	.0000E+00
87	.0000E+00	.0000E+00	.1032E+03	.0000E+00	.0000E+00	.0000E+00
88	.0000E+00	.0000E+00	.9745E+02	.0000E+00	.0000E+00	.0000E+00
89	.0000E+00	.0000E+00	.8025E+02	.0000E+00	.0000E+00	.0000E+00
90	.0000E+00	.0000E+00	.6592E+02	.0000E+00	.0000E+00	.0000E+00
91	.0000E+00	.0000E+00	.8599E+02	.0000E+00	.0000E+00	.0000E+00
92	.0000E+00	.0000E+00	.1060E+03	.0000E+00	.0000E+00	.0000E+00
93	.0000E+00	.0000E+00	.1032E+03	.0000E+00	.0000E+00	.0000E+00
94	.0000E+00	.0000E+00	.9172E+02	.0000E+00	.0000E+00	.0000E+00
95	.0000E+00	.0000E+00	.7452E+02	.0000E+00	.0000E+00	.0000E+00
96	.0000E+00	.0000E+00	.6879E+02	.0000E+00	.0000E+00	.0000E+00
97	.0000E+00	.0000E+00	.8025E+02	.0000E+00	.0000E+00	.0000E+00
98	.0000E+00	.0000E+00	.8312E+02	.0000E+00	.0000E+00	.0000E+00
99	.0000E+00	.0000E+00	.7452E+02	.0000E+00	.0000E+00	.0000E+00
100	.0000E+00	.0000E+00	.3726E+02	.0000E+00	.0000E+00	.0000E+00
101	.0000E+00	.0000E+00	.3637E+02	.0000E+00	.0000E+00	.0000E+00
102	.0000E+00	.0000E+00	.7275E+02	.0000E+00	.0000E+00	.0000E+00
103	.0000E+00	.0000E+00	.7275E+02	.0000E+00	.0000E+00	.0000E+00
104	.0000E+00	.0000E+00	.7275E+02	.0000E+00	.0000E+00	.0000E+00
105	.0000E+00	.0000E+00	.7275E+02	.0000E+00	.0000E+00	.0000E+00
106	.0000E+00	.0000E+00	.7275E+02	.0000E+00	.0000E+00	.0000E+00
107	.0000E+00	.0000E+00	.7275E+02	.0000E+00	.0000E+00	.0000E+00
108	.0000E+00	.0000E+00	.6870E+02	.0000E+00	.0000E+00	.0000E+00
109	.0000E+00	.0000E+00	.5658E+02	.0000E+00	.0000E+00	.0000E+00
110	.0000E+00	.0000E+00	.4648E+02	.0000E+00	.0000E+00	.0000E+00
111	.0000E+00	.0000E+00	.6062E+02	.0000E+00	.0000E+00	.0000E+00
112	.0000E+00	.0000E+00	.7477E+02	.0000E+00	.0000E+00	.0000E+00
113	.0000E+00	.0000E+00	.7275E+02	.0000E+00	.0000E+00	.0000E+00
114	.0000E+00	.0000E+00	.6466E+02	.0000E+00	.0000E+00	.0000E+00
115	.0000E+00	.0000E+00	.5254E+02	.0000E+00	.0000E+00	.0000E+00

I M A G E S 3 D

= Copyright (c) 1984 Celestial Software Inc. =

SOLVE DISPLACEMENTS Version 2.0 07/01/90

L O A D C A S E 3

LATERAL EARTH PRESSURE

APPLIED LOAD VECTOR

Node	Fx	Fy	Fz	Mx	My	Mz
116	.0000E+00	.0000E+00	.4850E+02	.0000E+00	.0000E+00	.0000E+00
117	.0000E+00	.0000E+00	.5658E+02	.0000E+00	.0000E+00	.0000E+00
118	.0000E+00	.0000E+00	.5860E+02	.0000E+00	.0000E+00	.0000E+00
119	.0000E+00	.0000E+00	.5254E+02	.0000E+00	.0000E+00	.0000E+00
120	.0000E+00	.0000E+00	.2627E+02	.0000E+00	.0000E+00	.0000E+00
121	.0000E+00	.0000E+00	.3807E+02	.0000E+00	.0000E+00	.0000E+00
122	.0000E+00	.0000E+00	.7613E+02	.0000E+00	.0000E+00	.0000E+00
123	.0000E+00	.0000E+00	.7613E+02	.0000E+00	.0000E+00	.0000E+00
124	.0000E+00	.0000E+00	.7613E+02	.0000E+00	.0000E+00	.0000E+00
125	.0000E+00	.0000E+00	.7613E+02	.0000E+00	.0000E+00	.0000E+00
126	.0000E+00	.0000E+00	.7613E+02	.0000E+00	.0000E+00	.0000E+00
127	.0000E+00	.0000E+00	.7613E+02	.0000E+00	.0000E+00	.0000E+00
128	.0000E+00	.0000E+00	.7190E+02	.0000E+00	.0000E+00	.0000E+00
129	.0000E+00	.0000E+00	.5921E+02	.0000E+00	.0000E+00	.0000E+00
130	.0000E+00	.0000E+00	.4864E+02	.0000E+00	.0000E+00	.0000E+00
131	.0000E+00	.0000E+00	.6344E+02	.0000E+00	.0000E+00	.0000E+00
132	.0000E+00	.0000E+00	.7825E+02	.0000E+00	.0000E+00	.0000E+00
133	.0000E+00	.0000E+00	.7613E+02	.0000E+00	.0000E+00	.0000E+00
134	.0000E+00	.0000E+00	.6767E+02	.0000E+00	.0000E+00	.0000E+00
135	.0000E+00	.0000E+00	.5498E+02	.0000E+00	.0000E+00	.0000E+00
136	.0000E+00	.0000E+00	.5075E+02	.0000E+00	.0000E+00	.0000E+00
137	.0000E+00	.0000E+00	.5921E+02	.0000E+00	.0000E+00	.0000E+00
138	.0000E+00	.0000E+00	.6133E+02	.0000E+00	.0000E+00	.0000E+00
139	.0000E+00	.0000E+00	.5498E+02	.0000E+00	.0000E+00	.0000E+00
140	.0000E+00	.0000E+00	.2749E+02	.0000E+00	.0000E+00	.0000E+00
141	.0000E+00	.0000E+00	.3369E+02	.0000E+00	.0000E+00	.0000E+00
142	.0000E+00	.0000E+00	.6739E+02	.0000E+00	.0000E+00	.0000E+00
143	.0000E+00	.0000E+00	.6739E+02	.0000E+00	.0000E+00	.0000E+00
144	.0000E+00	.0000E+00	.6739E+02	.0000E+00	.0000E+00	.0000E+00
145	.0000E+00	.0000E+00	.6739E+02	.0000E+00	.0000E+00	.0000E+00
146	.0000E+00	.0000E+00	.6739E+02	.0000E+00	.0000E+00	.0000E+00
147	.0000E+00	.0000E+00	.6739E+02	.0000E+00	.0000E+00	.0000E+00
148	.0000E+00	.0000E+00	.6364E+02	.0000E+00	.0000E+00	.0000E+00
149	.0000E+00	.0000E+00	.5241E+02	.0000E+00	.0000E+00	.0000E+00
150	.0000E+00	.0000E+00	.4305E+02	.0000E+00	.0000E+00	.0000E+00
151	.0000E+00	.0000E+00	.5616E+02	.0000E+00	.0000E+00	.0000E+00
152	.0000E+00	.0000E+00	.6926E+02	.0000E+00	.0000E+00	.0000E+00
153	.0000E+00	.0000E+00	.6739E+02	.0000E+00	.0000E+00	.0000E+00
154	.0000E+00	.0000E+00	.5990E+02	.0000E+00	.0000E+00	.0000E+00
155	.0000E+00	.0000E+00	.4867E+02	.0000E+00	.0000E+00	.0000E+00

I M A G E S 3 D

= Copyright (c) 1984 Celestial Software Inc. =

SOLVE DISPLACEMENTS Version 2.0 07/01/90

L O A D C A S E 3

LATERAL EARTH PRESSURE

APPLIED LOAD VECTOR

Node	Fx	Fy	Fz	Mx	My	Mz
156	.0000E+00	.0000E+00	.4492E+02	.0000E+00	.0000E+00	.0000E+00
157	.0000E+00	.0000E+00	.5241E+02	.0000E+00	.0000E+00	.0000E+00
158	.0000E+00	.0000E+00	.5640E+02	.0000E+00	.0000E+00	.0000E+00
159	.0000E+00	.0000E+00	.5910E+02	.0000E+00	.0000E+00	.0000E+00
160	.0000E+00	.0000E+00	.3057E+02	.0000E+00	.0000E+00	.0000E+00
161	.0000E+00	.0000E+00	.2793E+02	.0000E+00	.0000E+00	.0000E+00
162	.0000E+00	.0000E+00	.5587E+02	.0000E+00	.0000E+00	.0000E+00
163	.0000E+00	.0000E+00	.5587E+02	.0000E+00	.0000E+00	.0000E+00
164	.0000E+00	.0000E+00	.5587E+02	.0000E+00	.0000E+00	.0000E+00
165	.0000E+00	.0000E+00	.5587E+02	.0000E+00	.0000E+00	.0000E+00
166	.0000E+00	.0000E+00	.5587E+02	.0000E+00	.0000E+00	.0000E+00
167	.0000E+00	.0000E+00	.5587E+02	.0000E+00	.0000E+00	.0000E+00
168	.0000E+00	.0000E+00	.5276E+02	.0000E+00	.0000E+00	.0000E+00
169	.0000E+00	.0000E+00	.4345E+02	.0000E+00	.0000E+00	.0000E+00
170	.0000E+00	.0000E+00	.3569E+02	.0000E+00	.0000E+00	.0000E+00
171	.0000E+00	.0000E+00	.4656E+02	.0000E+00	.0000E+00	.0000E+00
172	.0000E+00	.0000E+00	.5742E+02	.0000E+00	.0000E+00	.0000E+00
173	.0000E+00	.0000E+00	.5587E+02	.0000E+00	.0000E+00	.0000E+00
174	.0000E+00	.0000E+00	.4966E+02	.0000E+00	.0000E+00	.0000E+00
175	.0000E+00	.0000E+00	.4035E+02	.0000E+00	.0000E+00	.0000E+00
176	.0000E+00	.0000E+00	.3725E+02	.0000E+00	.0000E+00	.0000E+00
177	.0000E+00	.0000E+00	.4345E+02	.0000E+00	.0000E+00	.0000E+00
178	.0000E+00	.0000E+00	.4476E+02	.0000E+00	.0000E+00	.0000E+00
179	.0000E+00	.0000E+00	.3963E+02	.0000E+00	.0000E+00	.0000E+00
180	.0000E+00	.0000E+00	.1993E+02	.0000E+00	.0000E+00	.0000E+00
181	.0000E+00	.0000E+00	.2631E+02	.0000E+00	.0000E+00	.0000E+00
182	.0000E+00	.0000E+00	.5467E+02	.0000E+00	.0000E+00	.0000E+00
183	.0000E+00	.0000E+00	.5671E+02	.0000E+00	.0000E+00	.0000E+00
184	.0000E+00	.0000E+00	.5671E+02	.0000E+00	.0000E+00	.0000E+00
185	.0000E+00	.0000E+00	.5583E+02	.0000E+00	.0000E+00	.0000E+00
186	.0000E+00	.0000E+00	.5494E+02	.0000E+00	.0000E+00	.0000E+00
187	.0000E+00	.0000E+00	.5494E+02	.0000E+00	.0000E+00	.0000E+00
188	.0000E+00	.0000E+00	.5189E+02	.0000E+00	.0000E+00	.0000E+00
189	.0000E+00	.0000E+00	.4273E+02	.0000E+00	.0000E+00	.0000E+00
190	.0000E+00	.0000E+00	.3510E+02	.0000E+00	.0000E+00	.0000E+00
191	.0000E+00	.0000E+00	.4579E+02	.0000E+00	.0000E+00	.0000E+00
192	.0000E+00	.0000E+00	.5647E+02	.0000E+00	.0000E+00	.0000E+00
193	.0000E+00	.0000E+00	.5494E+02	.0000E+00	.0000E+00	.0000E+00
194	.0000E+00	.0000E+00	.4884E+02	.0000E+00	.0000E+00	.0000E+00
195	.0000E+00	.0000E+00	.3968E+02	.0000E+00	.0000E+00	.0000E+00

========== I M A G E S 3 D ==========
= Copyright (c) 1984 Celestial Software Inc. =
==========

SOLVE DISPLACEMENTS Version 2.0 07/01/90

L O A D C A S E 3
LATERAL EARTH PRESSURE

APPLIED LOAD VECTOR

Node	Fx	Fy	Fz	Mx	My	Mz
196	.0000E+00	.0000E+00	.3663E+02	.0000E+00	.0000E+00	.0000E+00
197	.0000E+00	.0000E+00	.4273E+02	.0000E+00	.0000E+00	.0000E+00
198	.0000E+00	.0000E+00	.4349E+02	.0000E+00	.0000E+00	.0000E+00
199	.0000E+00	.0000E+00	.3543E+02	.0000E+00	.0000E+00	.0000E+00
200	.0000E+00	.0000E+00	.1819E+02	.0000E+00	.0000E+00	.0000E+00
201	.0000E+00	.0000E+00	.1372E+02	.0000E+00	.0000E+00	.0000E+00
202	.0000E+00	.0000E+00	.3372E+02	.0000E+00	.0000E+00	.0000E+00
203	.0000E+00	.0000E+00	.4001E+02	.0000E+00	.0000E+00	.0000E+00
204	.0000E+00	.0000E+00	.4001E+02	.0000E+00	.0000E+00	.0000E+00
205	.0000E+00	.0000E+00	.3709E+02	.0000E+00	.0000E+00	.0000E+00
206	.0000E+00	.0000E+00	.3418E+02	.0000E+00	.0000E+00	.0000E+00
207	.0000E+00	.0000E+00	.3418E+02	.0000E+00	.0000E+00	.0000E+00
208	.0000E+00	.0000E+00	.3228E+02	.0000E+00	.0000E+00	.0000E+00
209	.0000E+00	.0000E+00	.2659E+02	.0000E+00	.0000E+00	.0000E+00
210	.0000E+00	.0000E+00	.2184E+02	.0000E+00	.0000E+00	.0000E+00
211	.0000E+00	.0000E+00	.2848E+02	.0000E+00	.0000E+00	.0000E+00
212	.0000E+00	.0000E+00	.3513E+02	.0000E+00	.0000E+00	.0000E+00
213	.0000E+00	.0000E+00	.3418E+02	.0000E+00	.0000E+00	.0000E+00
214	.0000E+00	.0000E+00	.3038E+02	.0000E+00	.0000E+00	.0000E+00
215	.0000E+00	.0000E+00	.2469E+02	.0000E+00	.0000E+00	.0000E+00
216	.0000E+00	.0000E+00	.2279E+02	.0000E+00	.0000E+00	.0000E+00
217	.0000E+00	.0000E+00	.2659E+02	.0000E+00	.0000E+00	.0000E+00
218	.0000E+00	.0000E+00	.3118E+02	.0000E+00	.0000E+00	.0000E+00
219	.0000E+00	.0000E+00	.3363E+02	.0000E+00	.0000E+00	.0000E+00
220	.0000E+00	.0000E+00	.1765E+02	.0000E+00	.0000E+00	.0000E+00
221	.0000E+00	.0000E+00	.1068E+02	.0000E+00	.0000E+00	.0000E+00
222	.0000E+00	.0000E+00	.2492E+02	.0000E+00	.0000E+00	.0000E+00
223	.0000E+00	.0000E+00	.2848E+02	.0000E+00	.0000E+00	.0000E+00
224	.0000E+00	.0000E+00	.2848E+02	.0000E+00	.0000E+00	.0000E+00
225	.0000E+00	.0000E+00	.2590E+02	.0000E+00	.0000E+00	.0000E+00
226	.0000E+00	.0000E+00	.2331E+02	.0000E+00	.0000E+00	.0000E+00
227	.0000E+00	.0000E+00	.2331E+02	.0000E+00	.0000E+00	.0000E+00
228	.0000E+00	.0000E+00	.2201E+02	.0000E+00	.0000E+00	.0000E+00
229	.0000E+00	.0000E+00	.1813E+02	.0000E+00	.0000E+00	.0000E+00
230	.0000E+00	.0000E+00	.1489E+02	.0000E+00	.0000E+00	.0000E+00
231	.0000E+00	.0000E+00	.1942E+02	.0000E+00	.0000E+00	.0000E+00
232	.0000E+00	.0000E+00	.2395E+02	.0000E+00	.0000E+00	.0000E+00
233	.0000E+00	.0000E+00	.2331E+02	.0000E+00	.0000E+00	.0000E+00
234	.0000E+00	.0000E+00	.2072E+02	.0000E+00	.0000E+00	.0000E+00
235	.0000E+00	.0000E+00	.1683E+02	.0000E+00	.0000E+00	.0000E+00

========== I M A G E S 3 D ==========
= Copyright (c) 1984 Celestial Software Inc. =
==========

SOLVE DISPLACEMENTS Version 2.0 07/01/90

L O A D C A S E 3
LATERAL EARTH PRESSURE

APPLIED LOAD VECTOR

Node	Fx	Fy	Fz	Mx	My	Mz
236	.0000E+00	.0000E+00	.1554E+02	.0000E+00	.0000E+00	.0000E+00
237	.0000E+00	.0000E+00	.1813E+02	.0000E+00	.0000E+00	.0000E+00
238	.0000E+00	.0000E+00	.2201E+02	.0000E+00	.0000E+00	.0000E+00
239	.0000E+00	.0000E+00	.2619E+02	.0000E+00	.0000E+00	.0000E+00
240	.0000E+00	.0000E+00	.1454E+02	.0000E+00	.0000E+00	.0000E+00
241	.0000E+00	.0000E+00	.7578E+01	.0000E+00	.0000E+00	.0000E+00
242	.0000E+00	.0000E+00	.1693E+02	.0000E+00	.0000E+00	.0000E+00
243	.0000E+00	.0000E+00	.1870E+02	.0000E+00	.0000E+00	.0000E+00
244	.0000E+00	.0000E+00	.1870E+02	.0000E+00	.0000E+00	.0000E+00
245	.0000E+00	.0000E+00	.1700E+02	.0000E+00	.0000E+00	.0000E+00
246	.0000E+00	.0000E+00	.1530E+02	.0000E+00	.0000E+00	.0000E+00
247	.0000E+00	.0000E+00	.1530E+02	.0000E+00	.0000E+00	.0000E+00
248	.0000E+00	.0000E+00	.1445E+02	.0000E+00	.0000E+00	.0000E+00
249	.0000E+00	.0000E+00	.1190E+02	.0000E+00	.0000E+00	.0000E+00
250	.0000E+00	.0000E+00	.9774E+01	.0000E+00	.0000E+00	.0000E+00
251	.0000E+00	.0000E+00	.1275E+02	.0000E+00	.0000E+00	.0000E+00
252	.0000E+00	.0000E+00	.1572E+02	.0000E+00	.0000E+00	.0000E+00
253	.0000E+00	.0000E+00	.1530E+02	.0000E+00	.0000E+00	.0000E+00
254	.0000E+00	.0000E+00	.1360E+02	.0000E+00	.0000E+00	.0000E+00
255	.0000E+00	.0000E+00	.1105E+02	.0000E+00	.0000E+00	.0000E+00
256	.0000E+00	.0000E+00	.1020E+02	.0000E+00	.0000E+00	.0000E+00
257	.0000E+00	.0000E+00	.1190E+02	.0000E+00	.0000E+00	.0000E+00
258	.0000E+00	.0000E+00	.1445E+02	.0000E+00	.0000E+00	.0000E+00
259	.0000E+00	.0000E+00	.1777E+02	.0000E+00	.0000E+00	.0000E+00
260	.0000E+00	.0000E+00	.1012E+02	.0000E+00	.0000E+00	.0000E+00
261	.0000E+00	.0000E+00	.1310E+01	.0000E+00	.0000E+00	.0000E+00
262	.0000E+00	.0000E+00	.2868E+01	.0000E+00	.0000E+00	.0000E+00
263	.0000E+00	.0000E+00	.3116E+01	.0000E+00	.0000E+00	.0000E+00
264	.0000E+00	.0000E+00	.3116E+01	.0000E+00	.0000E+00	.0000E+00
265	.0000E+00	.0000E+00	.2833E+01	.0000E+00	.0000E+00	.0000E+00
266	.0000E+00	.0000E+00	.2550E+01	.0000E+00	.0000E+00	.0000E+00
267	.0000E+00	.0000E+00	.2550E+01	.0000E+00	.0000E+00	.0000E+00
268	.0000E+00	.0000E+00	.2408E+01	.0000E+00	.0000E+00	.0000E+00
269	.0000E+00	.0000E+00	.1983E+01	.0000E+00	.0000E+00	.0000E+00
270	.0000E+00	.0000E+00	.1629E+01	.0000E+00	.0000E+00	.0000E+00
271	.0000E+00	.0000E+00	.2125E+01	.0000E+00	.0000E+00	.0000E+00
272	.0000E+00	.0000E+00	.2621E+01	.0000E+00	.0000E+00	.0000E+00
273	.0000E+00	.0000E+00	.2550E+01	.0000E+00	.0000E+00	.0000E+00
274	.0000E+00	.0000E+00	.2266E+01	.0000E+00	.0000E+00	.0000E+00
275	.0000E+00	.0000E+00	.1841E+01	.0000E+00	.0000E+00	.0000E+00

========== I M A G E S 3 D ==========
= Copyright (c) 1984 Celestial Software Inc. =
==========

SOLVE DISPLACEMENTS Version 2.0 07/01/90

L O A D C A S E 3

LATERAL EARTH PRESSURE

APPLIED LOAD VECTOR

Node	Fx	Fy	Fz	Mx	My	Mz
276	.0000E+00	.0000E+00	.1700E+01	.0000E+00	.0000E+00	.0000E+00
277	.0000E+00	.0000E+00	.1983E+01	.0000E+00	.0000E+00	.0000E+00
278	.0000E+00	.0000E+00	.2408E+01	.0000E+00	.0000E+00	.0000E+00
279	.0000E+00	.0000E+00	.3009E+01	.0000E+00	.0000E+00	.0000E+00
280	.0000E+00	.0000E+00	.1734E+01	.0000E+00	.0000E+00	.0000E+00

========== I M A G E S 3 D ==========
= Copyright (c) 1984 Celestial Software Inc. =
==========

SOLVE DISPLACEMENTS Version 2.0 07/01/90

L O A D C A S E 4

SEISMIC LOAD, ESS

APPLIED LOAD VECTOR

Node	Fx	Fy	Fz	Mx	My	Mz
1	.5625E+01	-.3740E+01	.6899E+01	.0000E+00	.0000E+00	.0000E+00
2	.1125E+02	-.7481E+01	.1380E+02	.0000E+00	.0000E+00	.0000E+00
3	.1125E+02	-.7481E+01	.1380E+02	.0000E+00	.0000E+00	.0000E+00
4	.1125E+02	-.7481E+01	.1380E+02	.0000E+00	.0000E+00	.0000E+00
5	.1125E+02	-.7481E+01	.1380E+02	.0000E+00	.0000E+00	.0000E+00
6	.1125E+02	-.7481E+01	.1380E+02	.0000E+00	.0000E+00	.0000E+00
7	.1125E+02	-.7481E+01	.1380E+02	.0000E+00	.0000E+00	.0000E+00
8	.1062E+02	-.7065E+01	.1303E+02	.0000E+00	.0000E+00	.0000E+00
9	.8749E+01	-.5818E+01	.1073E+02	.0000E+00	.0000E+00	.0000E+00
10	.7187E+01	-.4779E+01	.8816E+01	.0000E+00	.0000E+00	.0000E+00
11	.9374E+01	-.6234E+01	.1150E+02	.0000E+00	.0000E+00	.0000E+00
12	.1156E+02	-.7689E+01	.1418E+02	.0000E+00	.0000E+00	.0000E+00
13	.1125E+02	-.7481E+01	.1380E+02	.0000E+00	.0000E+00	.0000E+00
14	.9999E+01	-.6650E+01	.1227E+02	.0000E+00	.0000E+00	.0000E+00
15	.8124E+01	-.5403E+01	.9966E+01	.0000E+00	.0000E+00	.0000E+00
16	.7500E+01	-.4987E+01	.9199E+01	.0000E+00	.0000E+00	.0000E+00
17	.8749E+01	-.5818E+01	.1073E+02	.0000E+00	.0000E+00	.0000E+00
18	.9062E+01	-.6026E+01	.1112E+02	.0000E+00	.0000E+00	.0000E+00
19	.8124E+01	-.5403E+01	.9966E+01	.0000E+00	.0000E+00	.0000E+00
20	.4062E+01	-.2701E+01	.4983E+01	.0000E+00	.0000E+00	.0000E+00
21	.1125E+02	-.7481E+01	.1890E+02	.0000E+00	.0000E+00	.0000E+00
22	.2250E+02	-.1496E+02	.3780E+02	.0000E+00	.0000E+00	.0000E+00
23	.2250E+02	-.1496E+02	.3780E+02	.0000E+00	.0000E+00	.0000E+00
24	.2250E+02	-.1496E+02	.3780E+02	.0000E+00	.0000E+00	.0000E+00
25	.2250E+02	-.1496E+02	.3780E+02	.0000E+00	.0000E+00	.0000E+00
26	.2250E+02	-.1496E+02	.3780E+02	.0000E+00	.0000E+00	.0000E+00
27	.2250E+02	-.1496E+02	.3780E+02	.0000E+00	.0000E+00	.0000E+00
28	.2125E+02	-.1413E+02	.3570E+02	.0000E+00	.0000E+00	.0000E+00
29	.1750E+02	-.1164E+02	.2940E+02	.0000E+00	.0000E+00	.0000E+00
30	.1437E+02	-.9559E+01	.2415E+02	.0000E+00	.0000E+00	.0000E+00
31	.1875E+02	-.1247E+02	.3150E+02	.0000E+00	.0000E+00	.0000E+00
32	.2312E+02	-.1538E+02	.3885E+02	.0000E+00	.0000E+00	.0000E+00
33	.2250E+02	-.1496E+02	.3780E+02	.0000E+00	.0000E+00	.0000E+00
34	.2000E+02	-.1330E+02	.3360E+02	.0000E+00	.0000E+00	.0000E+00
35	.1625E+02	-.1081E+02	.2730E+02	.0000E+00	.0000E+00	.0000E+00

========== I M A G E S 3 D ==========
= Copyright (c) 1984 Celestial Software Inc. =
==========

SOLVE DISPLACEMENTS Version 2.0 07/01/90

L O A D C A S E 4

SEISMIC LOAD, ESS

APPLIED LOAD VECTOR

Node	Fx	Fy	Fz	Mx	My	Mz
36	.1500E+02	-.9974E+01	.2520E+02	.0000E+00	.0000E+00	.0000E+00
37	.1750E+02	-.1164E+02	.2940E+02	.0000E+00	.0000E+00	.0000E+00
38	.1812E+02	-.1205E+02	.3045E+02	.0000E+00	.0000E+00	.0000E+00
39	.1625E+02	-.1081E+02	.2730E+02	.0000E+00	.0000E+00	.0000E+00
40	.8124E+01	-.5403E+01	.1365E+02	.0000E+00	.0000E+00	.0000E+00
41	.1125E+02	-.7481E+01	.2655E+02	.0000E+00	.0000E+00	.0000E+00
42	.2250E+02	-.1496E+02	.5309E+02	.0000E+00	.0000E+00	.0000E+00
43	.2250E+02	-.1496E+02	.5309E+02	.0000E+00	.0000E+00	.0000E+00
44	.2250E+02	-.1496E+02	.5309E+02	.0000E+00	.0000E+00	.0000E+00
45	.2250E+02	-.1496E+02	.5309E+02	.0000E+00	.0000E+00	.0000E+00
46	.2250E+02	-.1496E+02	.5309E+02	.0000E+00	.0000E+00	.0000E+00
47	.2250E+02	-.1496E+02	.5309E+02	.0000E+00	.0000E+00	.0000E+00
48	.2125E+02	-.1413E+02	.5014E+02	.0000E+00	.0000E+00	.0000E+00
49	.1750E+02	-.1164E+02	.4130E+02	.0000E+00	.0000E+00	.0000E+00
50	.1437E+02	-.9559E+01	.3392E+02	.0000E+00	.0000E+00	.0000E+00
51	.1875E+02	-.1247E+02	.4425E+02	.0000E+00	.0000E+00	.0000E+00
52	.2312E+02	-.1538E+02	.5457E+02	.0000E+00	.0000E+00	.0000E+00
53	.2250E+02	-.1496E+02	.5309E+02	.0000E+00	.0000E+00	.0000E+00
54	.2000E+02	-.1330E+02	.4720E+02	.0000E+00	.0000E+00	.0000E+00
55	.1625E+02	-.1081E+02	.3835E+02	.0000E+00	.0000E+00	.0000E+00
56	.1500E+02	-.9974E+01	.3540E+02	.0000E+00	.0000E+00	.0000E+00
57	.1750E+02	-.1164E+02	.4130E+02	.0000E+00	.0000E+00	.0000E+00
58	.1812E+02	-.1205E+02	.4277E+02	.0000E+00	.0000E+00	.0000E+00
59	.1625E+02	-.1081E+02	.3835E+02	.0000E+00	.0000E+00	.0000E+00
60	.8124E+01	-.5403E+01	.1917E+02	.0000E+00	.0000E+00	.0000E+00
61	.1125E+02	-.7481E+01	.3420E+02	.0000E+00	.0000E+00	.0000E+00
62	.2250E+02	-.1496E+02	.6839E+02	.0000E+00	.0000E+00	.0000E+00
63	.2250E+02	-.1496E+02	.6839E+02	.0000E+00	.0000E+00	.0000E+00
64	.2250E+02	-.1496E+02	.6839E+02	.0000E+00	.0000E+00	.0000E+00
65	.2250E+02	-.1496E+02	.6839E+02	.0000E+00	.0000E+00	.0000E+00
66	.2250E+02	-.1496E+02	.6839E+02	.0000E+00	.0000E+00	.0000E+00
67	.2250E+02	-.1496E+02	.6839E+02	.0000E+00	.0000E+00	.0000E+00
68	.2125E+02	-.1413E+02	.6459E+02	.0000E+00	.0000E+00	.0000E+00
69	.1750E+02	-.1164E+02	.5319E+02	.0000E+00	.0000E+00	.0000E+00
70	.1437E+02	-.9559E+01	.4370E+02	.0000E+00	.0000E+00	.0000E+00
71	.1875E+02	-.1247E+02	.5699E+02	.0000E+00	.0000E+00	.0000E+00
72	.2312E+02	-.1538E+02	.7029E+02	.0000E+00	.0000E+00	.0000E+00
73	.2250E+02	-.1496E+02	.6839E+02	.0000E+00	.0000E+00	.0000E+00
74	.2000E+02	-.1330E+02	.6079E+02	.0000E+00	.0000E+00	.0000E+00
75	.1625E+02	-.1081E+02	.4939E+02	.0000E+00	.0000E+00	.0000E+00

========== I M A G E S 3 D ==========
= Copyright (c) 1984 Celestial Software Inc. =
==========

SOLVE DISPLACEMENTS Version 2.0 07/01/90

L O A D C A S E 4

SEISMIC LOAD, ESS

APPLIED LOAD VECTOR

Node	Fx	Fy	Fz	Mx	My	Mz
76	.1500E+02	-.9974E+01	.4560E+02	.0000E+00	.0000E+00	.0000E+00
77	.1750E+02	-.1164E+02	.5319E+02	.0000E+00	.0000E+00	.0000E+00
78	.1812E+02	-.1205E+02	.5509E+02	.0000E+00	.0000E+00	.0000E+00
79	.1625E+02	-.1081E+02	.4939E+02	.0000E+00	.0000E+00	.0000E+00
80	.8124E+01	-.5403E+01	.2470E+02	.0000E+00	.0000E+00	.0000E+00
81	.9843E+01	-.6546E+01	.3606E+02	.0000E+00	.0000E+00	.0000E+00
82	.1969E+02	-.1309E+02	.7211E+02	.0000E+00	.0000E+00	.0000E+00
83	.1969E+02	-.1309E+02	.7211E+02	.0000E+00	.0000E+00	.0000E+00
84	.1969E+02	-.1309E+02	.7211E+02	.0000E+00	.0000E+00	.0000E+00
85	.1969E+02	-.1309E+02	.7211E+02	.0000E+00	.0000E+00	.0000E+00
86	.1969E+02	-.1309E+02	.7211E+02	.0000E+00	.0000E+00	.0000E+00
87	.1969E+02	-.1309E+02	.7211E+02	.0000E+00	.0000E+00	.0000E+00
88	.1859E+02	-.1236E+02	.6811E+02	.0000E+00	.0000E+00	.0000E+00
89	.1531E+02	-.1018E+02	.5609E+02	.0000E+00	.0000E+00	.0000E+00
90	.1258E+02	-.8364E+01	.4607E+02	.0000E+00	.0000E+00	.0000E+00
91	.1641E+02	-.1091E+02	.6009E+02	.0000E+00	.0000E+00	.0000E+00
92	.2023E+02	-.1345E+02	.7412E+02	.0000E+00	.0000E+00	.0000E+00
93	.1969E+02	-.1309E+02	.7211E+02	.0000E+00	.0000E+00	.0000E+00
94	.1750E+02	-.1164E+02	.6410E+02	.0000E+00	.0000E+00	.0000E+00
95	.1422E+02	-.9455E+01	.5208E+02	.0000E+00	.0000E+00	.0000E+00
96	.1312E+02	-.8728E+01	.4808E+02	.0000E+00	.0000E+00	.0000E+00
97	.1531E+02	-.1018E+02	.5609E+02	.0000E+00	.0000E+00	.0000E+00
98	.1586E+02	-.1055E+02	.5809E+02	.0000E+00	.0000E+00	.0000E+00
99	.1422E+02	-.9455E+01	.5208E+02	.0000E+00	.0000E+00	.0000E+00
100	.7109E+01	-.4727E+01	.2604E+02	.0000E+00	.0000E+00	.0000E+00
101	.7734E+01	-.5143E+01	.3249E+02	.0000E+00	.0000E+00	.0000E+00
102	.1547E+02	-.1029E+02	.6499E+02	.0000E+00	.0000E+00	.0000E+00
103	.1547E+02	-.1029E+02	.6499E+02	.0000E+00	.0000E+00	.0000E+00
104	.1547E+02	-.1029E+02	.6499E+02	.0000E+00	.0000E+00	.0000E+00
105	.1547E+02	-.1029E+02	.6499E+02	.0000E+00	.0000E+00	.0000E+00
106	.1547E+02	-.1029E+02	.6499E+02	.0000E+00	.0000E+00	.0000E+00
107	.1547E+02	-.1029E+02	.6499E+02	.0000E+00	.0000E+00	.0000E+00
108	.1461E+02	-.9715E+01	.6138E+02	.0000E+00	.0000E+00	.0000E+00
109	.1203E+02	-.8000E+01	.5055E+02	.0000E+00	.0000E+00	.0000E+00
110	.9882E+01	-.6572E+01	.4152E+02	.0000E+00	.0000E+00	.0000E+00
111	.1289E+02	-.8572E+01	.5416E+02	.0000E+00	.0000E+00	.0000E+00
112	.1590E+02	-.1057E+02	.6679E+02	.0000E+00	.0000E+00	.0000E+00
113	.1547E+02	-.1029E+02	.6499E+02	.0000E+00	.0000E+00	.0000E+00
114	.1375E+02	-.9143E+01	.5777E+02	.0000E+00	.0000E+00	.0000E+00
115	.1117E+02	-.7429E+01	.4694E+02	.0000E+00	.0000E+00	.0000E+00

IMAGES 3D
Copyright (c) 1984 Celestial Software Inc.

SOLVE DISPLACEMENTS Version 2.0 07/01/90

LOAD CASE 4

SEISMIC LOAD, ESS

APPLIED LOAD VECTOR

Node	Fx	Fy	Fz	Mx	My	Mz
116	.1031E+02	-.6857E+01	.4332E+02	.0000E+00	.0000E+00	.0000E+00
117	.1203E+02	-.8000E+01	.5055E+02	.0000E+00	.0000E+00	.0000E+00
118	.1246E+02	-.8286E+01	.5235E+02	.0000E+00	.0000E+00	.0000E+00
119	.1117E+02	-.7429E+01	.4694E+02	.0000E+00	.0000E+00	.0000E+00
120	.5586E+01	-.3714E+01	.2347E+02	.0000E+00	.0000E+00	.0000E+00
121	.9140E+01	-.6078E+01	.4332E+02	.0000E+00	.0000E+00	.0000E+00
122	.1828E+02	-.1216E+02	.8664E+02	.0000E+00	.0000E+00	.0000E+00
123	.1828E+02	-.1216E+02	.8664E+02	.0000E+00	.0000E+00	.0000E+00
124	.1828E+02	-.1216E+02	.8664E+02	.0000E+00	.0000E+00	.0000E+00
125	.1828E+02	-.1216E+02	.8664E+02	.0000E+00	.0000E+00	.0000E+00
126	.1828E+02	-.1216E+02	.8664E+02	.0000E+00	.0000E+00	.0000E+00
127	.1828E+02	-.1216E+02	.8664E+02	.0000E+00	.0000E+00	.0000E+00
128	.1726E+02	-.1148E+02	.8183E+02	.0000E+00	.0000E+00	.0000E+00
129	.1422E+02	-.9455E+01	.6739E+02	.0000E+00	.0000E+00	.0000E+00
130	.1168E+02	-.7766E+01	.5536E+02	.0000E+00	.0000E+00	.0000E+00
131	.1523E+02	-.1013E+02	.7220E+02	.0000E+00	.0000E+00	.0000E+00
132	.1879E+02	-.1249E+02	.8905E+02	.0000E+00	.0000E+00	.0000E+00
133	.1828E+02	-.1216E+02	.8664E+02	.0000E+00	.0000E+00	.0000E+00
134	.1625E+02	-.1081E+02	.7702E+02	.0000E+00	.0000E+00	.0000E+00
135	.1320E+02	-.8780E+01	.6258E+02	.0000E+00	.0000E+00	.0000E+00
136	.1219E+02	-.8104E+01	.5776E+02	.0000E+00	.0000E+00	.0000E+00
137	.1422E+02	-.9455E+01	.6739E+02	.0000E+00	.0000E+00	.0000E+00
138	.1473E+02	-.9793E+01	.6980E+02	.0000E+00	.0000E+00	.0000E+00
139	.1320E+02	-.8780E+01	.6258E+02	.0000E+00	.0000E+00	.0000E+00
140	.6601E+01	-.4390E+01	.3129E+02	.0000E+00	.0000E+00	.0000E+00
141	.9228E+01	-.6137E+01	.4848E+02	.0000E+00	.0000E+00	.0000E+00
142	.1846E+02	-.1227E+02	.9695E+02	.0000E+00	.0000E+00	.0000E+00
143	.1846E+02	-.1227E+02	.9695E+02	.0000E+00	.0000E+00	.0000E+00
144	.1846E+02	-.1227E+02	.9695E+02	.0000E+00	.0000E+00	.0000E+00
145	.1846E+02	-.1227E+02	.9695E+02	.0000E+00	.0000E+00	.0000E+00
146	.1846E+02	-.1227E+02	.9695E+02	.0000E+00	.0000E+00	.0000E+00
147	.1846E+02	-.1227E+02	.9695E+02	.0000E+00	.0000E+00	.0000E+00
148	.1743E+02	-.1159E+02	.9157E+02	.0000E+00	.0000E+00	.0000E+00
149	.1435E+02	-.9546E+01	.7541E+02	.0000E+00	.0000E+00	.0000E+00
150	.1179E+02	-.7841E+01	.6194E+02	.0000E+00	.0000E+00	.0000E+00
151	.1538E+02	-.1023E+02	.8079E+02	.0000E+00	.0000E+00	.0000E+00
152	.1897E+02	-.1261E+02	.9965E+02	.0000E+00	.0000E+00	.0000E+00
153	.1846E+02	-.1227E+02	.9695E+02	.0000E+00	.0000E+00	.0000E+00
154	.1641E+02	-.1091E+02	.8618E+02	.0000E+00	.0000E+00	.0000E+00
155	.1333E+02	-.8864E+01	.7002E+02	.0000E+00	.0000E+00	.0000E+00

IMAGES 3D
Copyright (c) 1984 Celestial Software Inc.

SOLVE DISPLACEMENTS Version 2.0 07/01/90

LOAD CASE 4

SEISMIC LOAD, ESS

APPLIED LOAD VECTOR

Node	Fx	Fy	Fz	Mx	My	Mz
156	.1230E+02	-.8182E+01	.6464E+02	.0000E+00	.0000E+00	.0000E+00
157	.1435E+02	-.9546E+01	.7541E+02	.0000E+00	.0000E+00	.0000E+00
158	.1552E+02	-.1032E+02	.8183E+02	.0000E+00	.0000E+00	.0000E+00
159	.1661E+02	-.1104E+02	.8879E+02	.0000E+00	.0000E+00	.0000E+00
160	.8632E+01	-.5740E+01	.4630E+02	.0000E+00	.0000E+00	.0000E+00
161	.9140E+01	-.6078E+01	.5345E+02	.0000E+00	.0000E+00	.0000E+00
162	.1828E+02	-.1216E+02	.1069E+03	.0000E+00	.0000E+00	.0000E+00
163	.1828E+02	-.1216E+02	.1069E+03	.0000E+00	.0000E+00	.0000E+00
164	.1828E+02	-.1216E+02	.1069E+03	.0000E+00	.0000E+00	.0000E+00
165	.1828E+02	-.1216E+02	.1069E+03	.0000E+00	.0000E+00	.0000E+00
166	.1828E+02	-.1216E+02	.1069E+03	.0000E+00	.0000E+00	.0000E+00
167	.1828E+02	-.1216E+02	.1069E+03	.0000E+00	.0000E+00	.0000E+00
168	.1726E+02	-.1148E+02	.1010E+03	.0000E+00	.0000E+00	.0000E+00
169	.1422E+02	-.9455E+01	.8315E+02	.0000E+00	.0000E+00	.0000E+00
170	.1168E+02	-.7766E+01	.6830E+02	.0000E+00	.0000E+00	.0000E+00
171	.1523E+02	-.1013E+02	.8909E+02	.0000E+00	.0000E+00	.0000E+00
172	.1879E+02	-.1249E+02	.1099E+03	.0000E+00	.0000E+00	.0000E+00
173	.1828E+02	-.1216E+02	.1069E+03	.0000E+00	.0000E+00	.0000E+00
174	.1625E+02	-.1081E+02	.9503E+02	.0000E+00	.0000E+00	.0000E+00
175	.1320E+02	-.8780E+01	.7721E+02	.0000E+00	.0000E+00	.0000E+00
176	.1219E+02	-.8104E+01	.7127E+02	.0000E+00	.0000E+00	.0000E+00
177	.1422E+02	-.9455E+01	.8315E+02	.0000E+00	.0000E+00	.0000E+00
178	.1473E+02	-.9793E+01	.8636E+02	.0000E+00	.0000E+00	.0000E+00
179	.1339E+02	-.8902E+01	.7957E+02	.0000E+00	.0000E+00	.0000E+00
180	.6785E+01	-.4512E+01	.4048E+02	.0000E+00	.0000E+00	.0000E+00
181	.1062E+02	-.7060E+01	.6822E+02	.0000E+00	.0000E+00	.0000E+00
182	.2219E+02	-.1476E+02	.1430E+03	.0000E+00	.0000E+00	.0000E+00
183	.2316E+02	-.1540E+02	.1495E+03	.0000E+00	.0000E+00	.0000E+00
184	.2316E+02	-.1540E+02	.1495E+03	.0000E+00	.0000E+00	.0000E+00
185	.2274E+02	-.1512E+02	.1467E+03	.0000E+00	.0000E+00	.0000E+00
186	.2232E+02	-.1484E+02	.1438E+03	.0000E+00	.0000E+00	.0000E+00
187	.2232E+02	-.1484E+02	.1438E+03	.0000E+00	.0000E+00	.0000E+00
188	.2108E+02	-.1402E+02	.1358E+03	.0000E+00	.0000E+00	.0000E+00
189	.1736E+02	-.1155E+02	.1119E+03	.0000E+00	.0000E+00	.0000E+00
190	.1426E+02	-.9484E+01	.9189E+02	.0000E+00	.0000E+00	.0000E+00
191	.1860E+02	-.1237E+02	.1199E+03	.0000E+00	.0000E+00	.0000E+00
192	.2294E+02	-.1526E+02	.1478E+03	.0000E+00	.0000E+00	.0000E+00
193	.2232E+02	-.1484E+02	.1438E+03	.0000E+00	.0000E+00	.0000E+00
194	.1984E+02	-.1320E+02	.1278E+03	.0000E+00	.0000E+00	.0000E+00
195	.1612E+02	-.1072E+02	.1039E+03	.0000E+00	.0000E+00	.0000E+00

========== I M A G E S 3 D ==========
= Copyright (c) 1984 Celestial Software Inc. =
==========

SOLVE DISPLACEMENTS Version 2.0 07/01/90

L O A D C A S E 4

SEISMIC LOAD, ESS

APPLIED LOAD VECTOR

Node	Fx	Fy	Fz	Mx	My	Mz
196	.1488E+02	-.9896E+01	.9589E+02	.0000E+00	.0000E+00	.0000E+00
197	.1736E+02	-.1155E+02	.1119E+03	.0000E+00	.0000E+00	.0000E+00
198	.1785E+02	-.1187E+02	.1154E+03	.0000E+00	.0000E+00	.0000E+00
199	.1505E+02	-.1001E+02	.9857E+02	.0000E+00	.0000E+00	.0000E+00
200	.7778E+01	-.5173E+01	.5107E+02	.0000E+00	.0000E+00	.0000E+00
201	-.7304E+01	-.4857E+01	.1142E+02	.0000E+00	.0000E+00	.0000E+00
202	.1806E+02	-.1201E+02	.1843E+02	.0000E+00	.0000E+00	.0000E+00
203	.2151E+02	-.1430E+02	.1402E+02	.0000E+00	.0000E+00	.0000E+00
204	.2151E+02	-.1430E+02	.1402E+02	.0000E+00	.0000E+00	.0000E+00
205	.1989E+02	-.1323E+02	.1506E+02	.0000E+00	.0000E+00	.0000E+00
206	.1828E+02	-.1216E+02	.1609E+02	.0000E+00	.0000E+00	.0000E+00
207	.1828E+02	-.1216E+02	.1609E+02	.0000E+00	.0000E+00	.0000E+00
208	.1726E+02	-.1148E+02	.1520E+02	.0000E+00	.0000E+00	.0000E+00
209	.1422E+02	-.9455E+01	.1252E+02	.0000E+00	.0000E+00	.0000E+00
210	.1168E+02	-.7766E+01	.1028E+02	.0000E+00	.0000E+00	.0000E+00
211	.1523E+02	-.1013E+02	.1341E+02	.0000E+00	.0000E+00	.0000E+00
212	.1879E+02	-.1249E+02	.1654E+02	.0000E+00	.0000E+00	.0000E+00
213	.1828E+02	-.1216E+02	.1609E+02	.0000E+00	.0000E+00	.0000E+00
214	.1625E+02	-.1081E+02	.1431E+02	.0000E+00	.0000E+00	.0000E+00
215	.1320E+02	-.8780E+01	.1162E+02	.0000E+00	.0000E+00	.0000E+00
216	.1219E+02	-.8104E+01	.1073E+02	.0000E+00	.0000E+00	.0000E+00
217	.1422E+02	-.9455E+01	.1252E+02	.0000E+00	.0000E+00	.0000E+00
218	.1674E+02	-.1113E+02	.1167E+02	.0000E+00	.0000E+00	.0000E+00
219	.1813E+02	-.1206E+02	.1348E+02	.0000E+00	.0000E+00	.0000E+00
220	.9511E+01	-.6325E+01	.8962E+01	.0000E+00	.0000E+00	.0000E+00
221	.6806E+01	-.9590E+02	.6301E+02	.0000E+00	.0000E+00	.0000E+00
222	.1588E+02	-.2202E+03	.1461E+03	.0000E+00	.0000E+00	.0000E+00
223	.1814E+02	-.2486E+03	.1663E+03	.0000E+00	.0000E+00	.0000E+00
224	.1814E+02	-.2486E+03	.1663E+03	.0000E+00	.0000E+00	.0000E+00
225	.1649E+02	-.2260E+03	.1511E+03	.0000E+00	.0000E+00	.0000E+00
226	.1484E+02	-.2034E+03	.1360E+03	.0000E+00	.0000E+00	.0000E+00
227	.1484E+02	-.2034E+03	.1360E+03	.0000E+00	.0000E+00	.0000E+00
228	.1402E+02	-.1921E+03	.1285E+03	.0000E+00	.0000E+00	.0000E+00
229	.1154E+02	-.1582E+03	.1058E+03	.0000E+00	.0000E+00	.0000E+00
230	.9483E+01	-.1299E+03	.8691E+02	.0000E+00	.0000E+00	.0000E+00
231	.1237E+02	-.1695E+03	.1134E+03	.0000E+00	.0000E+00	.0000E+00
232	.1526E+02	-.2090E+03	.1398E+03	.0000E+00	.0000E+00	.0000E+00
233	.1484E+02	-.2034E+03	.1360E+03	.0000E+00	.0000E+00	.0000E+00
234	.1319E+02	-.1808E+03	.1209E+03	.0000E+00	.0000E+00	.0000E+00
235	.1072E+02	-.1469E+03	.9825E+02	.0000E+00	.0000E+00	.0000E+00

========== I M A G E S 3 D ==========
= Copyright (c) 1984 Celestial Software Inc. =
==========

SOLVE DISPLACEMENTS Version 2.0 07/01/90

L O A D C A S E 4

SEISMIC LOAD, ESS

APPLIED LOAD VECTOR

Node	Fx	Fy	Fz	Mx	My	Mz
236	.9895E+01	-.1356E+03	.9069E+02	.0000E+00	.0000E+00	.0000E+00
237	.1154E+02	-.1582E+03	.1058E+03	.0000E+00	.0000E+00	.0000E+00
238	.1402E+02	-.1921E+03	.1285E+03	.0000E+00	.0000E+00	.0000E+00
239	.1669E+02	-.2315E+03	.1536E+03	.0000E+00	.0000E+00	.0000E+00
240	.9266E+01	-.1298E+03	.8557E+02	.0000E+00	.0000E+00	.0000E+00
241	.7812E+01	-.5195E+01	.1454E+03	.0000E+00	.0000E+00	.0000E+00
242	.1736E+02	-.1154E+02	.3230E+03	.0000E+00	.0000E+00	.0000E+00
243	.1910E+02	-.1270E+02	.3553E+03	.0000E+00	.0000E+00	.0000E+00
244	.1910E+02	-.1270E+02	.3553E+03	.0000E+00	.0000E+00	.0000E+00
245	.1736E+02	-.1154E+02	.3230E+03	.0000E+00	.0000E+00	.0000E+00
246	.1562E+02	-.1039E+02	.2907E+03	.0000E+00	.0000E+00	.0000E+00
247	.1562E+02	-.1039E+02	.2907E+03	.0000E+00	.0000E+00	.0000E+00
248	.1476E+02	-.9813E+01	.2745E+03	.0000E+00	.0000E+00	.0000E+00
249	.1215E+02	-.8081E+01	.2261E+03	.0000E+00	.0000E+00	.0000E+00
250	.9982E+01	-.6638E+01	.1857E+03	.0000E+00	.0000E+00	.0000E+00
251	.1302E+02	-.8658E+01	.2422E+03	.0000E+00	.0000E+00	.0000E+00
252	.1606E+02	-.1068E+02	.2987E+03	.0000E+00	.0000E+00	.0000E+00
253	.1562E+02	-.1039E+02	.2907E+03	.0000E+00	.0000E+00	.0000E+00
254	.1389E+02	-.9236E+01	.2584E+03	.0000E+00	.0000E+00	.0000E+00
255	.1128E+02	-.7504E+01	.2099E+03	.0000E+00	.0000E+00	.0000E+00
256	.1042E+02	-.6927E+01	.1938E+03	.0000E+00	.0000E+00	.0000E+00
257	.1215E+02	-.8081E+01	.2261E+03	.0000E+00	.0000E+00	.0000E+00
258	.1476E+02	-.9813E+01	.2745E+03	.0000E+00	.0000E+00	.0000E+00
259	.1822E+02	-.1212E+02	.3390E+03	.0000E+00	.0000E+00	.0000E+00
260	.1041E+02	-.6922E+01	.1937E+03	.0000E+00	.0000E+00	.0000E+00
261	.8246E+01	-.5484E+01	.5304E+02	.0000E+00	.0000E+00	.0000E+00
262	.1779E+02	-.1183E+02	.1154E+03	.0000E+00	.0000E+00	.0000E+00
263	.1910E+02	-.1270E+02	.1247E+03	.0000E+00	.0000E+00	.0000E+00
264	.1910E+02	-.1270E+02	.1247E+03	.0000E+00	.0000E+00	.0000E+00
265	.1736E+02	-.1154E+02	.1133E+03	.0000E+00	.0000E+00	.0000E+00
266	.1562E+02	-.1039E+02	.1020E+03	.0000E+00	.0000E+00	.0000E+00
267	.1562E+02	-.1039E+02	.1020E+03	.0000E+00	.0000E+00	.0000E+00
268	.1476E+02	-.9813E+01	.9633E+02	.0000E+00	.0000E+00	.0000E+00
269	.1215E+02	-.8081E+01	.7933E+02	.0000E+00	.0000E+00	.0000E+00
270	.9982E+01	-.6638E+01	.6516E+02	.0000E+00	.0000E+00	.0000E+00
271	.1302E+02	-.8658E+01	.8500E+02	.0000E+00	.0000E+00	.0000E+00
272	.1606E+02	-.1068E+02	.1048E+03	.0000E+00	.0000E+00	.0000E+00
273	.1562E+02	-.1039E+02	.1020E+03	.0000E+00	.0000E+00	.0000E+00
274	.1389E+02	-.9236E+01	.9066E+02	.0000E+00	.0000E+00	.0000E+00
275	.1128E+02	-.7504E+01	.7366E+02	.0000E+00	.0000E+00	.0000E+00

========== I M A G E S 3 D ==========
= Copyright (c) 1984 Celestial Software Inc. =
==========

SOLVE DISPLACEMENTS Version 2.0 07/01/90

L O A D C A S E 4

SEISMIC LOAD, ESS

APPLIED LOAD VECTOR

Node	Fx	Fy	Fz	Mx	My	Mz
276	.1042E+02	-.6927E+01	.6800E+02	.0000E+00	.0000E+00	.0000E+00
277	.1215E+02	-.8081E+01	.7933E+02	.0000E+00	.0000E+00	.0000E+00
278	.1476E+02	-.9813E+01	.9633E+02	.0000E+00	.0000E+00	.0000E+00
279	.1866E+02	-.1241E+02	.1210E+03	.0000E+00	.0000E+00	.0000E+00
280	.1085E+02	-.7214E+01	.7002E+02	.0000E+00	.0000E+00	.0000E+00
281	.4268E+01	-.2838E+01	.4268E+01	.0000E+00	.0000E+00	.0000E+00
282	.9042E+01	-.6013E+01	.9042E+01	.0000E+00	.0000E+00	.0000E+00
283	.9548E+01	-.6349E+01	.9548E+01	.0000E+00	.0000E+00	.0000E+00
284	.9548E+01	-.6349E+01	.9548E+01	.0000E+00	.0000E+00	.0000E+00
285	.8680E+01	-.5772E+01	.8680E+01	.0000E+00	.0000E+00	.0000E+00
286	.7812E+01	-.5195E+01	.7812E+01	.0000E+00	.0000E+00	.0000E+00
287	.7812E+01	-.5195E+01	.7812E+01	.0000E+00	.0000E+00	.0000E+00
288	.7378E+01	-.4906E+01	.7378E+01	.0000E+00	.0000E+00	.0000E+00
289	.6076E+01	-.4041E+01	.6076E+01	.0000E+00	.0000E+00	.0000E+00
290	.4991E+01	-.3319E+01	.4991E+01	.0000E+00	.0000E+00	.0000E+00
291	.6510E+01	-.4329E+01	.6510E+01	.0000E+00	.0000E+00	.0000E+00
292	.8029E+01	-.5339E+01	.8029E+01	.0000E+00	.0000E+00	.0000E+00
293	.7812E+01	-.5195E+01	.7812E+01	.0000E+00	.0000E+00	.0000E+00
294	.6944E+01	-.4618E+01	.6944E+01	.0000E+00	.0000E+00	.0000E+00
295	.5642E+01	-.3752E+01	.5642E+01	.0000E+00	.0000E+00	.0000E+00
296	.5208E+01	-.3463E+01	.5208E+01	.0000E+00	.0000E+00	.0000E+00
297	.6076E+01	-.4041E+01	.6076E+01	.0000E+00	.0000E+00	.0000E+00
298	.7378E+01	-.4906E+01	.7378E+01	.0000E+00	.0000E+00	.0000E+00
299	.9476E+01	-.6301E+01	.9476E+01	.0000E+00	.0000E+00	.0000E+00
300	.5570E+01	-.3704E+01	.5570E+01	.0000E+00	.0000E+00	.0000E+00

========== I M A G E S 3 D ==========
= Copyright (c) 1984 Celestial Software Inc. =
==========

SOLVE DISPLACEMENTS Version 2.0 07/01/90

L O A D C A S E 5

OPERATING EQUIPMENT LOAD, RO

APPLIED LOAD VECTOR

Node	Fx	Fy	Fz	Mx	My	Mz
1	.0000E+00	.0000E+00	.2502E+02	.0000E+00	.0000E+00	.0000E+00
2	.0000E+00	.0000E+00	.5004E+02	.0000E+00	.0000E+00	.0000E+00
3	.0000E+00	.0000E+00	.5004E+02	.0000E+00	.0000E+00	.0000E+00
4	.0000E+00	.0000E+00	.5004E+02	.0000E+00	.0000E+00	.0000E+00
5	.0000E+00	.0000E+00	.5004E+02	.0000E+00	.0000E+00	.0000E+00
6	.0000E+00	.0000E+00	.5004E+02	.0000E+00	.0000E+00	.0000E+00
7	.0000E+00	.0000E+00	.5004E+02	.0000E+00	.0000E+00	.0000E+00
8	.0000E+00	.0000E+00	.4726E+02	.0000E+00	.0000E+00	.0000E+00
9	.0000E+00	.0000E+00	.3892E+02	.0000E+00	.0000E+00	.0000E+00
10	.0000E+00	.0000E+00	.3197E+02	.0000E+00	.0000E+00	.0000E+00
11	.0000E+00	.0000E+00	.4170E+02	.0000E+00	.0000E+00	.0000E+00
12	.0000E+00	.0000E+00	.5143E+02	.0000E+00	.0000E+00	.0000E+00
13	.0000E+00	.0000E+00	.5004E+02	.0000E+00	.0000E+00	.0000E+00
14	.0000E+00	.0000E+00	.4448E+02	.0000E+00	.0000E+00	.0000E+00
15	.0000E+00	.0000E+00	.3614E+02	.0000E+00	.0000E+00	.0000E+00
16	.0000E+00	.0000E+00	.3336E+02	.0000E+00	.0000E+00	.0000E+00
17	.0000E+00	.0000E+00	.3892E+02	.0000E+00	.0000E+00	.0000E+00
18	.0000E+00	.0000E+00	.4031E+02	.0000E+00	.0000E+00	.0000E+00
19	.0000E+00	.0000E+00	.3614E+02	.0000E+00	.0000E+00	.0000E+00
20	.0000E+00	.0000E+00	.1807E+02	.0000E+00	.0000E+00	.0000E+00
21	.0000E+00	.0000E+00	.5004E+02	.0000E+00	.0000E+00	.0000E+00
22	.0000E+00	.0000E+00	.1001E+03	.0000E+00	.0000E+00	.0000E+00
23	.0000E+00	.0000E+00	.1001E+03	.0000E+00	.0000E+00	.0000E+00
24	.0000E+00	.0000E+00	.1001E+03	.0000E+00	.0000E+00	.0000E+00
25	.0000E+00	.0000E+00	.1001E+03	.0000E+00	.0000E+00	.0000E+00
26	.0000E+00	.0000E+00	.1001E+03	.0000E+00	.0000E+00	.0000E+00
27	.0000E+00	.0000E+00	.1001E+03	.0000E+00	.0000E+00	.0000E+00
28	.0000E+00	.0000E+00	.9452E+02	.0000E+00	.0000E+00	.0000E+00
29	.0000E+00	.0000E+00	.7784E+02	.0000E+00	.0000E+00	.0000E+00
30	.0000E+00	.0000E+00	.6394E+02	.0000E+00	.0000E+00	.0000E+00
31	.0000E+00	.0000E+00	.8340E+02	.0000E+00	.0000E+00	.0000E+00
32	.0000E+00	.0000E+00	.1029E+03	.0000E+00	.0000E+00	.0000E+00
33	.0000E+00	.0000E+00	.1001E+03	.0000E+00	.0000E+00	.0000E+00
34	.0000E+00	.0000E+00	.8896E+02	.0000E+00	.0000E+00	.0000E+00
35	.0000E+00	.0000E+00	.7228E+02	.0000E+00	.0000E+00	.0000E+00

I M A G E S 3 D

= Copyright (c) 1984 Celestial Software Inc. =

SOLVE DISPLACEMENTS Version 2.0 07/01/90

L O A D C A S E 5

OPERATING EQUIPMENT LOAD, RO

APPLIED LOAD VECTOR

Node	Fx	Fy	Fz	Mx	My	Mz
36	.0000E+00	.0000E+00	.6672E+02	.0000E+00	.0000E+00	.0000E+00
37	.0000E+00	.0000E+00	.7784E+02	.0000E+00	.0000E+00	.0000E+00
38	.0000E+00	.0000E+00	.8062E+02	.0000E+00	.0000E+00	.0000E+00
39	.0000E+00	.0000E+00	.7228E+02	.0000E+00	.0000E+00	.0000E+00
40	.0000E+00	.0000E+00	.3614E+02	.0000E+00	.0000E+00	.0000E+00
41	.0000E+00	.0000E+00	.5004E+02	.0000E+00	.0000E+00	.0000E+00
42	.0000E+00	.0000E+00	.1001E+03	.0000E+00	.0000E+00	.0000E+00
43	.0000E+00	.0000E+00	.1001E+03	.0000E+00	.0000E+00	.0000E+00
44	.0000E+00	.0000E+00	.1001E+03	.0000E+00	.0000E+00	.0000E+00
45	.0000E+00	.0000E+00	.1001E+03	.0000E+00	.0000E+00	.0000E+00
46	.0000E+00	.0000E+00	.1001E+03	.0000E+00	.0000E+00	.0000E+00
47	.0000E+00	.0000E+00	.1001E+03	.0000E+00	.0000E+00	.0000E+00
48	.0000E+00	.0000E+00	.9452E+02	.0000E+00	.0000E+00	.0000E+00
49	.0000E+00	.0000E+00	.7784E+02	.0000E+00	.0000E+00	.0000E+00
50	.0000E+00	.0000E+00	.6394E+02	.0000E+00	.0000E+00	.0000E+00
51	.0000E+00	.0000E+00	.8340E+02	.0000E+00	.0000E+00	.0000E+00
52	.0000E+00	.0000E+00	.1029E+03	.0000E+00	.0000E+00	.0000E+00
53	.0000E+00	.0000E+00	.1001E+03	.0000E+00	.0000E+00	.0000E+00
54	.0000E+00	.0000E+00	.8896E+02	.0000E+00	.0000E+00	.0000E+00
55	.0000E+00	.0000E+00	.7228E+02	.0000E+00	.0000E+00	.0000E+00
56	.0000E+00	.0000E+00	.6672E+02	.0000E+00	.0000E+00	.0000E+00
57	.0000E+00	.0000E+00	.7784E+02	.0000E+00	.0000E+00	.0000E+00
58	.0000E+00	.0000E+00	.8062E+02	.0000E+00	.0000E+00	.0000E+00
59	.0000E+00	.0000E+00	.7228E+02	.0000E+00	.0000E+00	.0000E+00
60	.0000E+00	.0000E+00	.3614E+02	.0000E+00	.0000E+00	.0000E+00
61	.0000E+00	.0000E+00	.5004E+02	.0000E+00	.0000E+00	.0000E+00
62	.0000E+00	.0000E+00	.1001E+03	.0000E+00	.0000E+00	.0000E+00
63	.0000E+00	.0000E+00	.1001E+03	.0000E+00	.0000E+00	.0000E+00
64	.0000E+00	.0000E+00	.1001E+03	.0000E+00	.0000E+00	.0000E+00
65	.0000E+00	.0000E+00	.1001E+03	.0000E+00	.0000E+00	.0000E+00
66	.0000E+00	.0000E+00	.1001E+03	.0000E+00	.0000E+00	.0000E+00
67	.0000E+00	.0000E+00	.1001E+03	.0000E+00	.0000E+00	.0000E+00
68	.0000E+00	.0000E+00	.9452E+02	.0000E+00	.0000E+00	.0000E+00
69	.0000E+00	.0000E+00	.7784E+02	.0000E+00	.0000E+00	.0000E+00
70	.0000E+00	.0000E+00	.6394E+02	.0000E+00	.0000E+00	.0000E+00
71	.0000E+00	.0000E+00	.8340E+02	.0000E+00	.0000E+00	.0000E+00
72	.0000E+00	.0000E+00	.1029E+03	.0000E+00	.0000E+00	.0000E+00
73	.0000E+00	.0000E+00	.1001E+03	.0000E+00	.0000E+00	.0000E+00
74	.0000E+00	.0000E+00	.8896E+02	.0000E+00	.0000E+00	.0000E+00
75	.0000E+00	.0000E+00	.7228E+02	.0000E+00	.0000E+00	.0000E+00

I M A G E S 3 D

= Copyright (c) 1984 Celestial Software Inc. =

SOLVE DISPLACEMENTS Version 2.0 07/01/90

L O A D C A S E 5

OPERATING EQUIPMENT LOAD, RO

APPLIED LOAD VECTOR

Node	Fx	Fy	Fz	Mx	My	Mz
76	.0000E+00	.0000E+00	.6672E+02	.0000E+00	.0000E+00	.0000E+00
77	.0000E+00	.0000E+00	.7784E+02	.0000E+00	.0000E+00	.0000E+00
78	.0000E+00	.0000E+00	.8062E+02	.0000E+00	.0000E+00	.0000E+00
79	.0000E+00	.0000E+00	.7228E+02	.0000E+00	.0000E+00	.0000E+00
80	.0000E+00	.0000E+00	.3614E+02	.0000E+00	.0000E+00	.0000E+00
81	.0000E+00	.0000E+00	.4378E+02	.0000E+00	.0000E+00	.0000E+00
82	.0000E+00	.0000E+00	.8757E+02	.0000E+00	.0000E+00	.0000E+00
83	.0000E+00	.0000E+00	.8757E+02	.0000E+00	.0000E+00	.0000E+00
84	.0000E+00	.0000E+00	.8757E+02	.0000E+00	.0000E+00	.0000E+00
85	.0000E+00	.0000E+00	.8757E+02	.0000E+00	.0000E+00	.0000E+00
86	.0000E+00	.0000E+00	.8757E+02	.0000E+00	.0000E+00	.0000E+00
87	.0000E+00	.0000E+00	.8757E+02	.0000E+00	.0000E+00	.0000E+00
88	.0000E+00	.0000E+00	.8270E+02	.0000E+00	.0000E+00	.0000E+00
89	.0000E+00	.0000E+00	.6811E+02	.0000E+00	.0000E+00	.0000E+00
90	.0000E+00	.0000E+00	.5595E+02	.0000E+00	.0000E+00	.0000E+00
91	-.7500E+04	-.7500E+04	.7297E+02	-.1900E+05	-.1900E+05	.0000E+00
92	.0000E+00	.0000E+00	.9000E+02	.0000E+00	.0000E+00	.0000E+00
93	.0000E+00	.0000E+00	.8757E+02	.0000E+00	.0000E+00	.0000E+00
94	.0000E+00	.0000E+00	.7784E+02	.0000E+00	.0000E+00	.0000E+00
95	.0000E+00	.0000E+00	.6324E+02	.0000E+00	.0000E+00	.0000E+00
96	.0000E+00	.0000E+00	.5838E+02	.0000E+00	.0000E+00	.0000E+00
97	.0000E+00	.0000E+00	.6811E+02	.0000E+00	.0000E+00	.0000E+00
98	.0000E+00	.0000E+00	.7054E+02	.0000E+00	.0000E+00	.0000E+00
99	.0000E+00	.0000E+00	.6324E+02	.0000E+00	.0000E+00	.0000E+00
100	.0000E+00	.0000E+00	.3162E+02	.0000E+00	.0000E+00	.0000E+00
101	.0000E+00	.0000E+00	.3440E+02	.0000E+00	.0000E+00	.0000E+00
102	.0000E+00	.0000E+00	.6880E+02	.0000E+00	.0000E+00	.0000E+00
103	.0000E+00	.0000E+00	.6880E+02	.0000E+00	.0000E+00	.0000E+00
104	.0000E+00	.0000E+00	.6880E+02	.0000E+00	.0000E+00	.0000E+00
105	.0000E+00	.0000E+00	.6880E+02	.0000E+00	.0000E+00	.0000E+00
106	.0000E+00	.0000E+00	.6880E+02	.0000E+00	.0000E+00	.0000E+00
107	.0000E+00	.0000E+00	.6880E+02	.0000E+00	.0000E+00	.0000E+00
108	.0000E+00	.0000E+00	.6498E+02	.0000E+00	.0000E+00	.0000E+00
109	.0000E+00	.0000E+00	.5351E+02	.0000E+00	.0000E+00	.0000E+00
110	.0000E+00	.0000E+00	.4396E+02	.0000E+00	.0000E+00	.0000E+00
111	.0000E+00	.0000E+00	.5734E+02	.0000E+00	.0000E+00	.0000E+00
112	.0000E+00	.0000E+00	.7072E+02	.0000E+00	.0000E+00	.0000E+00
113	.0000E+00	.0000E+00	.6880E+02	.0000E+00	.0000E+00	.0000E+00
114	.0000E+00	.0000E+00	.6116E+02	.0000E+00	.0000E+00	.0000E+00
115	.0000E+00	.0000E+00	.4969E+02	.0000E+00	.0000E+00	.0000E+00

IC-14PRINT

========== I M A G E S 3 D ==========
= Copyright (c) 1984 Celestial Software Inc. =
==========

SOLVE DISPLACEMENTS Version 2.0 07/01/90

L O A D C A S E 5
OPERATING EQUIPMENT LOAD, RO

APPLIED LOAD VECTOR

Node	Fx	Fy	Fz	Mx	My	Mz
116	.0000E+00	.0000E+00	.4587E+02	.0000E+00	.0000E+00	.0000E+00
117	.0000E+00	.0000E+00	.5351E+02	.0000E+00	.0000E+00	.0000E+00
118	.0000E+00	.0000E+00	.5543E+02	.0000E+00	.0000E+00	.0000E+00
119	.0000E+00	.0000E+00	.4969E+02	.0000E+00	.0000E+00	.0000E+00
120	.0000E+00	.0000E+00	.2485E+02	.0000E+00	.0000E+00	.0000E+00
121	.0000E+00	.0000E+00	.4066E+02	.0000E+00	.0000E+00	.0000E+00
122	.0000E+00	.0000E+00	.8131E+02	.0000E+00	.0000E+00	.0000E+00
123	.0000E+00	.0000E+00	.8131E+02	.0000E+00	.0000E+00	.0000E+00
124	.0000E+00	.0000E+00	.8131E+02	.0000E+00	.0000E+00	.0000E+00
125	.0000E+00	.0000E+00	.8131E+02	.0000E+00	.0000E+00	.0000E+00
126	.0000E+00	.0000E+00	.8131E+02	.0000E+00	.0000E+00	.0000E+00
127	.0000E+00	.0000E+00	.8131E+02	.0000E+00	.0000E+00	.0000E+00
128	.0000E+00	.0000E+00	.7680E+02	.0000E+00	.0000E+00	.0000E+00
129	.0000E+00	.0000E+00	.6324E+02	.0000E+00	.0000E+00	.0000E+00
130	.0000E+00	.0000E+00	.5195E+02	.0000E+00	.0000E+00	.0000E+00
131	.0000E+00	.0000E+00	.6776E+02	.0000E+00	.0000E+00	.0000E+00
132	.0000E+00	.0000E+00	.8357E+02	.0000E+00	.0000E+00	.0000E+00
133	.0000E+00	.0000E+00	.8131E+02	.0000E+00	.0000E+00	.0000E+00
134	.0000E+00	.0000E+00	.7228E+02	.0000E+00	.0000E+00	.0000E+00
135	.0000E+00	.0000E+00	.5873E+02	.0000E+00	.0000E+00	.0000E+00
136	.0000E+00	.0000E+00	.5421E+02	.0000E+00	.0000E+00	.0000E+00
137	.0000E+00	.0000E+00	.6324E+02	.0000E+00	.0000E+00	.0000E+00
138	.0000E+00	.0000E+00	.6550E+02	.0000E+00	.0000E+00	.0000E+00
139	.0000E+00	.0000E+00	.5873E+02	.0000E+00	.0000E+00	.0000E+00
140	.0000E+00	.0000E+00	.2936E+02	.0000E+00	.0000E+00	.0000E+00
141	.0000E+00	.0000E+00	.4105E+02	.0000E+00	.0000E+00	.0000E+00
142	.0000E+00	.0000E+00	.8210E+02	.0000E+00	.0000E+00	.0000E+00
143	.0000E+00	.0000E+00	.8210E+02	.0000E+00	.0000E+00	.0000E+00
144	.0000E+00	.0000E+00	.8210E+02	.0000E+00	.0000E+00	.0000E+00
145	.0000E+00	.0000E+00	.8210E+02	.0000E+00	.0000E+00	.0000E+00
146	.0000E+00	.0000E+00	.8210E+02	.0000E+00	.0000E+00	.0000E+00
147	.0000E+00	.0000E+00	.8210E+02	.0000E+00	.0000E+00	.0000E+00
148	.0000E+00	.0000E+00	.7754E+02	.0000E+00	.0000E+00	.0000E+00
149	.0000E+00	.0000E+00	.6385E+02	.0000E+00	.0000E+00	.0000E+00
150	.0000E+00	.0000E+00	.5245E+02	.0000E+00	.0000E+00	.0000E+00
151	.0000E+00	.0000E+00	.6841E+02	.0000E+00	.0000E+00	.0000E+00
152	.0000E+00	.0000E+00	.8438E+02	.0000E+00	.0000E+00	.0000E+00
153	.0000E+00	.0000E+00	.8210E+02	.0000E+00	.0000E+00	.0000E+00
154	.0000E+00	.0000E+00	.7297E+02	.0000E+00	.0000E+00	.0000E+00
155	.0000E+00	.0000E+00	.5929E+02	.0000E+00	.0000E+00	.0000E+00

========== I M A G E S 3 D ==========
= Copyright (c) 1984 Celestial Software Inc. =
==========

SOLVE DISPLACEMENTS Version 2.0 07/01/90

L O A D C A S E 5
OPERATING EQUIPMENT LOAD, RO

APPLIED LOAD VECTOR

Node	Fx	Fy	Fz	Mx	My	Mz
156	.0000E+00	.0000E+00	.5473E+02	.0000E+00	.0000E+00	.0000E+00
157	.0000E+00	.0000E+00	.6385E+02	.0000E+00	.0000E+00	.0000E+00
158	.0000E+00	.0000E+00	.6905E+02	.0000E+00	.0000E+00	.0000E+00
159	.0000E+00	.0000E+00	.7388E+02	.0000E+00	.0000E+00	.0000E+00
160	.0000E+00	.0000E+00	.3840E+02	.0000E+00	.0000E+00	.0000E+00
161	.0000E+00	.0000E+00	.4066E+02	.0000E+00	.0000E+00	.0000E+00
162	.0000E+00	.0000E+00	.8131E+02	.0000E+00	.0000E+00	.0000E+00
163	.0000E+00	.0000E+00	.8131E+02	.0000E+00	.0000E+00	.0000E+00
164	.0000E+00	.0000E+00	.8131E+02	.0000E+00	.0000E+00	.0000E+00
165	.0000E+00	.0000E+00	.8131E+02	.0000E+00	.0000E+00	.0000E+00
166	.0000E+00	.0000E+00	.8131E+02	.0000E+00	.0000E+00	.0000E+00
167	.0000E+00	.0000E+00	.8131E+02	.0000E+00	.0000E+00	.0000E+00
168	.0000E+00	.0000E+00	.7680E+02	.0000E+00	.0000E+00	.0000E+00
169	.0000E+00	.0000E+00	.6324E+02	.0000E+00	.0000E+00	.0000E+00
170	.0000E+00	.0000E+00	.5195E+02	.0000E+00	.0000E+00	.0000E+00
171	.0000E+00	.0000E+00	.6776E+02	.0000E+00	.0000E+00	.0000E+00
172	.0000E+00	.0000E+00	.8357E+02	.0000E+00	.0000E+00	.0000E+00
173	.0000E+00	.0000E+00	.8131E+02	.0000E+00	.0000E+00	.0000E+00
174	.0000E+00	.0000E+00	.7228E+02	.0000E+00	.0000E+00	.0000E+00
175	-.7831E+04	-.7690E+03	.1352E+05	-.1590E+05	-.1879E+05	.5134E+05
176	.0000E+00	.0000E+00	.5421E+02	.0000E+00	.0000E+00	.0000E+00
177	.0000E+00	.0000E+00	.6324E+02	.0000E+00	.0000E+00	.0000E+00
178	.0000E+00	.0000E+00	.6550E+02	.0000E+00	.0000E+00	.0000E+00
179	.0000E+00	.0000E+00	.5955E+02	.0000E+00	.0000E+00	.0000E+00
180	.0000E+00	.0000E+00	.3018E+02	.0000E+00	.0000E+00	.0000E+00
181	.0000E+00	.0000E+00	.4723E+02	.0000E+00	.0000E+00	.0000E+00
182	.0000E+00	.0000E+00	.9873E+02	.0000E+00	.0000E+00	.0000E+00
183	.0000E+00	.0000E+00	.1030E+03	.0000E+00	.0000E+00	.0000E+00
184	.0000E+00	.0000E+00	.1030E+03	.0000E+00	.0000E+00	.0000E+00
185	.0000E+00	.0000E+00	.1012E+03	.0000E+00	.0000E+00	.0000E+00
186	.0000E+00	.0000E+00	.9930E+02	.0000E+00	.0000E+00	.0000E+00
187	.0000E+00	.0000E+00	.9930E+02	.0000E+00	.0000E+00	.0000E+00
188	.0000E+00	.0000E+00	.9378E+02	.0000E+00	.0000E+00	.0000E+00
189	.0000E+00	.0000E+00	.7723E+02	.0000E+00	.0000E+00	.0000E+00
190	.0000E+00	.0000E+00	.6344E+02	.0000E+00	.0000E+00	.0000E+00
191	.0000E+00	.0000E+00	.8275E+02	.0000E+00	.0000E+00	.0000E+00
192	.0000E+00	.0000E+00	.1021E+03	.0000E+00	.0000E+00	.0000E+00
193	.0000E+00	.0000E+00	.9930E+02	.0000E+00	.0000E+00	.0000E+00
194	.0000E+00	.0000E+00	.8826E+02	.0000E+00	.0000E+00	.0000E+00
195	.0000E+00	.0000E+00	.7172E+02	.0000E+00	.0000E+00	.0000E+00

========== I M A G E S 3 D ==========
= Copyright (c) 1984 Celestial Software Inc. =
==========

SOLVE DISPLACEMENTS Version 2.0 07/01/90

L O A D C A S E 5
OPERATING EQUIPMENT LOAD, RO

APPLIED LOAD VECTOR

Node	Fx	Fy	Fz	Mx	My	Mz
196	.0000E+00	.0000E+00	.6620E+02	.0000E+00	.0000E+00	.0000E+00
197	.0000E+00	.0000E+00	.7723E+02	.0000E+00	.0000E+00	.0000E+00
198	.0000E+00	.0000E+00	.7939E+02	.0000E+00	.0000E+00	.0000E+00
199	.0000E+00	.0000E+00	.6694E+02	.0000E+00	.0000E+00	.0000E+00
200	.0000E+00	.0000E+00	.3460E+02	.0000E+00	.0000E+00	.0000E+00
201	.0000E+00	.0000E+00	.3249E+02	.0000E+00	.0000E+00	.0000E+00
202	.0000E+00	.0000E+00	.8033E+02	.0000E+00	.0000E+00	.0000E+00
203	.0000E+00	.0000E+00	.9568E+02	.0000E+00	.0000E+00	.0000E+00
204	.0000E+00	.0000E+00	.9568E+02	.0000E+00	.0000E+00	.0000E+00
205	.0000E+00	.0000E+00	.8850E+02	.0000E+00	.0000E+00	.0000E+00
206	.0000E+00	.0000E+00	.8131E+02	.0000E+00	.0000E+00	.0000E+00
207	.0000E+00	.0000E+00	.8131E+02	.0000E+00	.0000E+00	.0000E+00
208	.0000E+00	.0000E+00	.7680E+02	.0000E+00	.0000E+00	.0000E+00
209	.0000E+00	.0000E+00	.6324E+02	.0000E+00	.0000E+00	.0000E+00
210	.0000E+00	.0000E+00	.5195E+02	.0000E+00	.0000E+00	.0000E+00
211	.0000E+00	.0000E+00	.6776E+02	.0000E+00	.0000E+00	.0000E+00
212	.0000E+00	.0000E+00	.8357E+02	.0000E+00	.0000E+00	.0000E+00
213	.0000E+00	.0000E+00	.8131E+02	.0000E+00	.0000E+00	.0000E+00
214	.0000E+00	.0000E+00	.7228E+02	.0000E+00	.0000E+00	.0000E+00
215	.0000E+00	.0000E+00	.5873E+02	.0000E+00	.0000E+00	.0000E+00
216	.0000E+00	.0000E+00	.5421E+02	.0000E+00	.0000E+00	.0000E+00
217	.0000E+00	.0000E+00	.6324E+02	.0000E+00	.0000E+00	.0000E+00
218	.0000E+00	.0000E+00	.7448E+02	.0000E+00	.0000E+00	.0000E+00
219	.0000E+00	.0000E+00	.8065E+02	.0000E+00	.0000E+00	.0000E+00
220	.0000E+00	.0000E+00	.4231E+02	.0000E+00	.0000E+00	.0000E+00
221	.0000E+00	.0000E+00	.3764E+02	.0000E+00	.0000E+00	.0000E+00
222	.0000E+00	.0000E+00	.8733E+02	.0000E+00	.0000E+00	.0000E+00
223	.0000E+00	.0000E+00	.9938E+02	.0000E+00	.0000E+00	.0000E+00
224	.0000E+00	.0000E+00	.9938E+02	.0000E+00	.0000E+00	.0000E+00
225	.0000E+00	.0000E+00	.9035E+02	.0000E+00	.0000E+00	.0000E+00
226	.0000E+00	.0000E+00	.8131E+02	.0000E+00	.0000E+00	.0000E+00
227	.0000E+00	.0000E+00	.8131E+02	.0000E+00	.0000E+00	.0000E+00
228	.0000E+00	.0000E+00	.5456E+02	.0000E+00	.0000E+00	.0000E+00
229	.0000E+00	.0000E+00	.2432E+02	.0000E+00	.0000E+00	.0000E+00
230	.0000E+00	.0000E+00	.1998E+02	.0000E+00	.0000E+00	.0000E+00
231	.0000E+00	.0000E+00	.2606E+02	.0000E+00	.0000E+00	.0000E+00
232	.0000E+00	.0000E+00	.3214E+02	.0000E+00	.0000E+00	.0000E+00
233	.0000E+00	.0000E+00	.3127E+02	.0000E+00	.0000E+00	.0000E+00
234	.0000E+00	.0000E+00	.2780E+02	.0000E+00	.0000E+00	.0000E+00
235	.0000E+00	.0000E+00	.2259E+02	.0000E+00	.0000E+00	.0000E+00

========== I M A G E S 3 D ==========
= Copyright (c) 1984 Celestial Software Inc. =
==========

SOLVE DISPLACEMENTS Version 2.0 07/01/90

L O A D C A S E 5
OPERATING EQUIPMENT LOAD, RO

APPLIED LOAD VECTOR

Node	Fx	Fy	Fz	Mx	My	Mz
236	.0000E+00	.0000E+00	.2085E+02	.0000E+00	.0000E+00	.0000E+00
237	.0000E+00	.0000E+00	.2432E+02	.0000E+00	.0000E+00	.0000E+00
238	.0000E+00	.0000E+00	.2954E+02	.0000E+00	.0000E+00	.0000E+00
239	.0000E+00	.0000E+00	.3434E+02	.0000E+00	.0000E+00	.0000E+00
240	.0000E+00	.0000E+00	.1870E+02	.0000E+00	.0000E+00	.0000E+00
241	.0000E+00	.0000E+00	.2456E+02	.0000E+00	.0000E+00	.0000E+00
242	.0000E+00	.0000E+00	.5514E+02	.0000E+00	.0000E+00	.0000E+00
243	.0000E+00	.0000E+00	.6116E+02	.0000E+00	.0000E+00	.0000E+00
244	.0000E+00	.0000E+00	.6116E+02	.0000E+00	.0000E+00	.0000E+00
245	.0000E+00	.0000E+00	.5560E+02	.0000E+00	.0000E+00	.0000E+00
246	.0000E+00	.0000E+00	.5004E+02	.0000E+00	.0000E+00	.0000E+00
247	.0000E+00	.0000E+00	.5004E+02	.0000E+00	.0000E+00	.0000E+00
248	.0000E+00	.0000E+00	.2502E+02	.0000E+00	.0000E+00	.0000E+00

KAISER ENGINEERS HANFORD S/N:801854 08/29/95
PAGE 115 Run ID=8065974 10:25:06

I M A G E S 3 D

= Copyright (c) 1984 Celestial Software Inc. =

SOLVE PLATE LOADS/STRESSES Version 2.0 07/01/90

Load Case 1:DEAD LOAD, D

MAXIMUM STRESS SUMMARY FOR PLATES
WITHIN SPECIFIED RANGE 1- 266

Maximum (absolute) Stress = .2537E+02 at Plate 248

Plate	Sigma X	Sigma Y	Tau XY	Von Mises
248	.2537E+02	.2225E+01	-.2093E+01	.2460E+02

KAISER ENGINEERS HANFORD S/N:801854 08/29/95
PAGE 116 Run ID=8065974 10:25:40

I M A G E S 3 D

= Copyright (c) 1984 Celestial Software Inc. =

SOLVE PLATE LOADS/STRESSES Version 2.0 07/01/90

Load Case 2:LIVE LOAD, L - OVERBURDEN PRESSURE

MAXIMUM STRESS SUMMARY FOR PLATES
WITHIN SPECIFIED RANGE 1- 266

Maximum (absolute) Stress = .3212E+01 at Plate 248

Plate	Sigma X	Sigma Y	Tau XY	Von Mises
248	-.3212E+01	-.2979E+00	-.1248E+00	.3082E+01

```
============== I M A G E S  3 D ==============
= Copyright (c) 1984   Celestial Software Inc. =
================================================
```

SOLVE PLATE LOADS/STRESSES Version 2.0 07/01/90

Load Case 3:LATERAL EARTH PRESSURE

MAXIMUM STRESS SUMMARY FOR PLATES
WITHIN SPECIFIED RANGE 1- 266

Maximum (absolute) Stress = .2050E+02 at Plate 9

Plate	Sigma X	Sigma Y	Tau XY	Von Mises
9	-.2561E+01	-.2050E+02	-.9094E-01	.1935E+02


```
============== I M A G E S  3 D ==============
= Copyright (c) 1984   Celestial Software Inc. =
================================================
```

SOLVE PLATE LOADS/STRESSES Version 2.0 07/01/90

Load Case 4:SEISMIC LOAD, ESS

MAXIMUM STRESS SUMMARY FOR PLATES
WITHIN SPECIFIED RANGE 1- 266

Maximum (absolute) Stress = .6743E+02 at Plate 248

Plate	Sigma X	Sigma Y	Tau XY	Von Mises
248	.6743E+02	.6312E+01	.2597E+01	.6467E+02

========== I M A G E S 3 D ==========
= Copyright (c) 1984 Celestial Software Inc. =
==========

SOLVE PLATE LOADS/STRESSES Version 2.0 07/01/90

Load Case 5:OPERATING EQUIPMENT LOAD, RO

MAXIMUM STRESS SUMMARY FOR PLATES
WITHIN SPECIFIED RANGE 1- 266

Maximum (absolute) Stress = .9028E+02 at Plate 171

Plate	Sigma X	Sigma Y	Tau XY	Von Mises
171	.9028E+02	.1184E+02	-.1263E+02	.8776E+02

========== I M A G E S 3 D ==========
= Copyright (c) 1984 Celestial Software Inc. =
==========

COMBINE RESULTS Version 2.0 07/01/90

Combined Plate Stresses

Load Combination Method
1.4*F[1,1]+1.7*F[1,2]+1.7*F[1,3]+1.7*F[1,5]

Plate		Sigma-X	Sigma-Y	Tau-XY	Tau-XZ	Tau-YZ
1	T	-9.389E+00	-1.085E+01	-7.444E+00		
1	M	-2.368E+00	-3.180E+00	-2.016E+00	5.918E-01	8.627E-01
1	B	4.653E+00	4.489E+00	3.412E+00		
2	T	-7.883E+00	-2.755E+01	-1.232E+01		
2	M	-2.154E+00	-7.502E+00	-2.944E+00	-6.746E-01	3.948E+00
2	B	3.574E+00	1.255E+01	6.433E+00		
3	T	-8.516E+00	-4.366E+01	-1.552E+01		
3	M	-2.361E+00	-1.031E+01	-3.738E+00	-1.336E+00	8.517E+00
3	B	3.793E+00	2.303E+01	8.042E+00		
4	T	-9.991E+00	-6.121E+01	-1.699E+01		
4	M	-2.692E+00	-1.273E+01	-4.469E+00	-1.724E+00	1.303E+01
4	B	4.607E+00	3.574E+01	8.048E+00		
5	T	-1.199E+01	-7.886E+01	-1.736E+01		
5	M	-3.102E+00	-1.507E+01	-5.273E+00	-1.857E+00	1.709E+01
5	B	5.780E+00	4.873E+01	6.812E+00		
6	T	-1.415E+01	-9.574E+01	-1.712E+01		
6	M	-3.517E+00	-1.760E+01	-6.183E+00	-1.767E+00	2.060E+01
6	B	7.118E+00	6.053E+01	4.753E+00		
7	T	-1.596E+01	-1.114E+02	-1.642E+01		
7	M	-3.717E+00	-2.071E+01	-7.072E+00	-1.460E+00	2.369E+01
7	B	8.529E+00	7.002E+01	2.280E+00		
8	T	-1.656E+01	-1.243E+02	-1.459E+01		
8	M	-3.177E+00	-2.365E+01	-7.092E+00	-9.898E-01	2.638E+01
8	B	1.020E+01	7.695E+01	4.097E-01		
9	T	-1.686E+01	-1.324E+02	-1.204E+01		
9	M	-2.947E+00	-2.541E+01	-6.385E+00	-5.605E-01	2.842E+01
9	B	1.096E+01	8.162E+01	-7.354E-01		
10	T	-1.592E+01	-1.362E+02	-8.754E+00		
10	M	-2.102E+00	-2.551E+01	-5.116E+00	-2.060E-01	2.982E+01
10	B	1.172E+01	8.519E+01	-1.478E+00		
11	T	-1.560E+01	-1.360E+02	-3.779E+00		
11	M	-2.155E+00	-2.361E+01	-3.471E+00	2.189E-01	3.071E+01
11	B	1.129E+01	8.874E+01	-3.162E+00		
12	T	-1.414E+01	-1.298E+02	2.655E+00		
12	M	-1.772E+00	-1.991E+01	-1.970E+00	7.531E-01	3.026E+01
12	B	1.060E+01	8.995E+01	-6.594E+00		

========== I M A G E S 3 D ==========
= Copyright (c) 1984 Celestial Software Inc. =
==========
COMBINE RESULTS Version 2.0 07/01/90

Combined Plate Stresses

Plate		Sigma-X	Sigma-Y	Tau-XY	Tau-XZ	Tau-YZ
13	T	-1.264E+01	-1.171E+02	8.838E+00		
13	M	-1.579E+00	-1.605E+01	-1.055E+00	1.277E+00	2.762E+01
13	B	9.485E+00	8.501E+01	-1.095E+01		
14	T	-1.094E+01	-1.012E+02	1.381E+01		
14	M	-1.137E+00	-1.301E+01	-4.565E-01	1.629E+00	2.348E+01
14	B	8.662E+00	7.520E+01	-1.472E+01		
15	T	-9.943E+00	-8.521E+01	1.702E+01		
15	M	-8.886E-01	-1.082E+01	8.224E-02	1.712E+00	1.882E+01
15	B	8.166E+00	6.357E+01	-1.686E+01		
16	T	-9.456E+00	-6.873E+01	1.853E+01		
16	M	-7.414E-01	-8.832E+00	5.142E-01	1.575E+00	1.370E+01
16	B	7.974E+00	5.107E+01	-1.750E+01		
17	T	-9.587E+00	-4.914E+01	1.779E+01		
17	M	-6.412E-01	-6.499E+00	8.567E-01	1.180E+00	7.504E+00
17	B	8.304E+00	3.614E+01	-1.607E+01		
18	T	-1.047E+01	-3.001E+01	1.420E+01		
18	M	-6.277E-01	-4.066E+00	1.004E+00	5.577E-01	1.904E+00
18	B	9.214E+00	2.188E+01	-1.219E+01		
19	T	-1.279E+01	-1.209E+01	9.319E+00		
19	M	-8.142E-01	-1.558E+00	9.736E-01	-4.221E-01	-1.077E-01
19	B	1.116E+01	8.968E+00	-7.371E+00		
20	T	-2.264E+01	-8.509E+00	-1.213E+01		
20	M	-4.973E+00	-2.557E+00	-3.278E+00	2.934E+00	-4.868E-01
20	B	1.269E+01	3.395E+00	5.571E+00		
21	T	-1.423E+01	-1.784E+01	-1.560E+01		
21	M	-3.931E+00	-5.896E+00	-3.107E+00	2.052E-01	9.899E-01
21	B	6.365E+00	6.052E+00	9.384E+00		
22	T	-1.019E+01	-2.841E+01	-1.944E+01		
22	M	-3.715E+00	-8.795E+00	-3.581E+00	-1.424E+00	5.095E+00
22	B	2.763E+00	1.082E+01	1.227E+01		
23	T	-8.353E+00	-3.974E+01	-2.110E+01		
23	M	-3.926E+00	-1.116E+01	-4.131E+00	-2.442E+00	9.211E+00
23	B	5.007E-01	1.742E+01	1.284E+01		
24	T	-8.071E+00	-5.138E+01	-2.124E+01		
24	M	-4.396E+00	-1.335E+01	-4.816E+00	-2.924E+00	1.291E+01
24	B	-7.212E-01	2.469E+01	1.161E+01		
25	T	-8.759E+00	-6.273E+01	-2.062E+01		
25	M	-4.968E+00	-1.570E+01	-5.799E+00	-2.920E+00	1.609E+01
25	B	-1.177E+00	3.132E+01	9.024E+00		
26	T	-9.376E+00	-7.342E+01	-1.986E+01		
26	M	-5.183E+00	-1.856E+01	-7.259E+00	-2.411E+00	1.881E+01
26	B	-9.894E-01	3.630E+01	5.339E+00		

========== I M A G E S 3 D ==========
= Copyright (c) 1984 Celestial Software Inc. =
==========
COMBINE RESULTS Version 2.0 07/01/90

Combined Plate Stresses

Plate		Sigma-X	Sigma-Y	Tau-XY	Tau-XZ	Tau-YZ
27	T	-8.155E+00	-8.361E+01	-1.888E+01		
27	M	-4.122E+00	-2.297E+01	-8.891E+00	-1.383E+00	2.122E+01
27	B	-8.877E-02	3.768E+01	1.102E+00		
28	T	-4.101E+00	-8.978E+01	-1.495E+01		
28	M	-9.231E-01	-2.599E+01	-7.593E+00	-3.094E-01	2.332E+01
28	B	2.255E+00	3.780E+01	-2.338E-01		
29	T	-3.245E+00	-9.241E+01	-1.137E+01		
29	M	-8.974E-01	-2.685E+01	-6.240E+00	1.919E-01	2.490E+01
29	B	1.451E+00	3.871E+01	-1.108E+00		
30	T	9.320E-01	-9.112E+01	-4.534E+00		
30	M	8.164E-01	-2.460E+01	-3.548E+00	6.343E-01	2.586E+01
30	B	7.008E-01	4.193E+01	-2.562E+00		
31	T	2.073E+00	-8.560E+01	3.479E+00		
31	M	5.366E-02	-1.980E+01	-1.837E+00	1.041E+00	2.536E+01
31	B	-1.966E+00	4.601E+01	-7.152E+00		
32	T	3.774E+00	-7.752E+01	1.097E+01		
32	M	5.735E-01	-1.561E+01	-1.512E+00	1.627E+00	2.277E+01
32	B	-2.627E+00	4.631E+01	-1.400E+01		
33	T	2.827E+00	-6.815E+01	1.818E+01		
33	M	8.208E-01	-1.285E+01	-7.031E-01	1.832E+00	1.902E+01
33	B	-1.186E+00	4.245E+01	-1.958E+01		
34	T	1.336E-01	-5.814E+01	2.280E+01		
34	M	7.809E-01	-1.058E+01	2.860E-02	1.492E+00	1.484E+01
34	B	1.428E+00	3.698E+01	-2.274E+01		
35	T	-4.251E+00	-4.770E+01	2.514E+01		
35	M	6.249E-01	-8.425E+00	5.686E-01	7.685E-01	1.013E+01
35	B	5.501E+00	3.085E+01	-2.400E+01		
36	T	-1.169E+01	-3.509E+01	2.462E+01		
36	M	3.094E-01	-5.910E+00	1.050E+00	-4.475E-01	4.319E+00
36	B	1.231E+01	2.327E+01	-2.252E+01		
37	T	-2.128E+01	-2.223E+01	2.058E+01		
37	M	-1.964E-01	-3.290E+00	1.436E+00	-2.011E+00	-8.966E-01
37	B	2.089E+01	1.565E+01	-1.771E+01		
38	T	-3.264E+01	-1.122E+01	1.744E+01		
38	M	-9.373E-01	-1.156E+00	1.940E+00	-4.034E+00	-1.408E+00
38	B	3.077E+01	8.907E+00	-1.356E+01		
39	T	-3.488E+01	-8.265E+00	-1.557E+01		
39	M	-6.187E+00	-2.297E+00	-4.330E+00	6.525E+00	-1.287E+00
39	B	2.251E+01	3.670E+00	6.913E+00		
40	T	-2.154E+01	-1.258E+01	-1.958E+01		
40	M	-5.314E+00	-4.956E+00	-3.730E+00	3.528E+00	-1.006E+00
40	B	1.091E+01	2.670E+00	1.212E+01		

========== I M A G E S 3 D ==========
= Copyright (c) 1984 Celestial Software Inc. =
==========

COMBINE RESULTS Version 2.0 07/01/90

Combined Plate Stresses

Plate		Sigma-X	Sigma-Y	Tau-XY	Tau-XZ	Tau-YZ
41	T	-1.279E+01	-1.815E+01	-2.369E+01		
41	M	-4.848E+00	-7.535E+00	-3.637E+00	1.421E+00	2.435E+00
41	B	3.097E+00	3.074E+00	1.642E+01		
42	T	-7.515E+00	-2.456E+01	-2.548E+01		
42	M	-4.904E+00	-9.786E+00	-3.842E+00	-4.289E-02	6.038E+00
42	B	-2.294E+00	4.992E+00	1.779E+01		
43	T	-4.825E+00	-3.126E+01	-2.529E+01		
43	M	-5.372E+00	-1.177E+01	-4.269E+00	-9.534E-01	9.269E+00
43	B	-5.918E+00	7.720E+00	1.675E+01		
44	T	-4.074E+00	-3.774E+01	-2.402E+01		
44	M	-6.198E+00	-1.362E+01	-5.111E+00	-1.355E+00	1.200E+01
44	B	-8.322E+00	1.050E+01	1.380E+01		
45	T	-4.550E+00	-4.392E+01	-2.277E+01		
45	M	-7.316E+00	-1.585E+01	-6.872E+00	-1.234E+00	1.419E+01
45	B	-1.008E+01	1.222E+01	9.029E+00		
46	T	-4.607E+00	-4.941E+01	-2.285E+01		
46	M	-8.038E+00	-1.865E+01	-1.018E+01	-4.607E-01	1.590E+01
46	B	-1.147E+01	1.211E+01	2.493E+00		
47	T	-7.076E-01	-5.883E+01	-2.426E+01		
47	M	-6.277E+00	-2.779E+01	-1.509E+01	9.971E-01	1.787E+01
47	B	-1.185E+01	3.248E+00	-5.924E+00		
48	T	1.491E+01	-6.033E+01	-1.346E+01		
48	M	5.553E+00	-3.187E+01	-7.833E+00	2.197E+00	2.076E+01
48	B	-3.804E+00	-3.401E+00	-2.206E+00		
49	T	1.094E+01	-5.455E+01	-6.283E+00		
49	M	7.772E-01	-2.616E+01	-3.166E+00	3.116E-01	2.234E+01
49	B	-9.381E+00	2.231E+00	-4.843E-02		
50	T	2.136E+01	-5.053E+01	1.144E+00		
50	M	3.717E+00	-1.903E+01	-2.507E+00	-3.035E-01	2.113E+01
50	B	-1.393E+01	1.248E+01	-6.158E+00		
51	T	2.010E+01	-4.865E+01	1.311E+01		
51	M	3.499E+00	-1.548E+01	-1.692E+00	-2.440E-01	1.872E+01
51	B	-1.310E+01	1.769E+01	-1.650E+01		
52	T	1.679E+01	-4.393E+01	2.262E+01		
52	M	3.120E+00	-1.295E+01	-4.425E-01	-1.263E+00	1.581E+01
52	B	-1.055E+01	1.804E+01	-2.350E+01		
53	T	1.051E+01	-3.863E+01	2.907E+01		
53	M	2.676E+00	-1.047E+01	3.727E-01	-2.857E+00	1.226E+01
53	B	-5.160E+00	1.770E+01	-2.833E+01		
54	T	1.125E+00	-3.276E+01	3.267E+01		
54	M	2.265E+00	-8.165E+00	1.014E+00	-4.688E+00	7.932E+00
54	B	3.404E+00	1.643E+01	-3.064E+01		

========== I M A G E S 3 D ==========
= Copyright (c) 1984 Celestial Software Inc. =
==========

COMBINE RESULTS Version 2.0 07/01/90

Combined Plate Stresses

Plate		Sigma-X	Sigma-Y	Tau-XY	Tau-XZ	Tau-YZ
55	T	-1.419E+01	-2.551E+01	3.264E+01		
55	M	1.689E+00	-5.512E+00	1.642E+00	-6.946E+00	2.320E+00
55	B	1.757E+01	1.449E+01	-2.935E+01		
56	T	-3.335E+01	-1.845E+01	2.826E+01		
56	M	9.917E-01	-2.921E+00	2.272E+00	-9.249E+00	-2.689E+00
56	B	3.533E+01	1.260E+01	-2.371E+01		
57	T	-5.331E+01	-1.256E+01	2.413E+01		
57	M	2.782E-01	-9.180E-01	2.861E+00	-1.149E+01	-2.236E+00
57	B	5.386E+01	1.072E+01	-1.841E+01		
58	T	-4.817E+01	-9.055E+00	-1.759E+01		
58	M	-6.793E+00	-2.165E+00	-5.173E+00	1.005E+01	-1.861E+00
58	B	3.458E+01	4.724E+00	7.244E+00		
59	T	-2.939E+01	-1.001E+01	-2.194E+01		
59	M	-6.011E+00	-4.417E+00	-4.349E+00	6.925E+00	-2.474E+00
59	B	1.736E+01	1.178E+00	1.324E+01		
60	T	-1.608E+01	-1.199E+01	-2.622E+01		
60	M	-5.537E+00	-6.681E+00	-3.852E+00	4.501E+00	3.803E-01
60	B	5.007E+00	-1.371E+00	1.851E+01		
61	T	-7.176E+00	-1.464E+01	-2.786E+01		
61	M	-5.484E+00	-8.718E+00	-3.637E+00	2.650E+00	3.478E+00
61	B	3.793E+00	-2.798E+00	2.059E+01		
62	T	-1.832E+00	-1.753E+01	-2.726E+01		
62	M	-5.895E+00	-1.044E+01	-3.682E+00	1.328E+00	6.249E+00
62	B	-9.958E+00	-3.361E+00	1.990E+01		
63	T	6.522E-01	-2.029E+01	-2.520E+01		
63	M	-6.844E+00	-1.188E+01	-4.069E+00	4.803E-01	8.568E+00
63	B	-1.437E+01	-3.472E+00	1.707E+01		
64	T	4.880E-01	-2.235E+01	-2.265E+01		
64	M	-8.688E+00	-1.283E+01	-5.147E+00	4.811E-03	1.035E+01
64	B	-1.786E+01	3.321E+00	1.235E+01		
65	T	-2.821E+00	-2.394E+01	-2.131E+01		
65	M	-1.208E+01	-1.423E+01	-7.777E+00	-2.765E-01	1.151E+01
65	B	-2.134E+01	-4.520E+00	5.754E+00		
66	T	-1.049E+01	-2.180E+01	-2.492E+01		
66	M	-1.774E+01	-1.290E+01	-1.426E+01	-6.604E-01	1.238E+01
66	B	-2.498E+01	-3.992E+00	-3.599E+00		
67	T	-2.629E+01	-3.446E+01	-4.101E+01		
67	M	-2.613E+01	-4.055E+01	-3.526E+01	-1.693E+00	1.810E+01
67	B	-2.596E+01	-4.664E+01	-2.950E+01		
68	T	5.829E+01	-3.058E+01	-2.177E+01		
68	M	2.098E+01	-3.747E+01	-3.175E+00	-3.113E+00	2.015E+01
68	B	-1.634E+01	-4.435E+01	1.542E+01		

Combined Plate Stresses

Plate		Sigma-X	Sigma-Y	Tau-XY	Tau-XZ	Tau-YZ
69	T	3.861E+01	-2.763E+01	3.218E+00		
69	M	7.785E+00	-1.606E+01	-1.461E+00	-8.097E-01	1.660E+01
69	B	-2.304E+01	-4.485E+00	-6.139E+00		
70	T	3.661E+01	-2.681E+01	1.346E+01		
70	M	6.442E+00	-1.610E+01	-7.523E-01	-1.278E+00	1.601E+01
70	B	-2.372E+01	-5.390E+00	-1.496E+01		
71	T	3.200E+01	-2.587E+01	2.446E+01		
71	M	5.129E+00	-1.292E+01	2.350E-01	-4.170E+00	1.466E+01
71	B	-2.174E+01	3.926E-02	-2.399E+01		
72	T	2.259E+01	-2.396E+01	3.285E+01		
72	M	4.611E+00	-1.044E+01	1.024E+00	-7.623E+00	1.182E+01
72	B	-1.337E+01	3.092E+00	-3.080E+01		
73	T	7.567E+00	-2.132E+01	3.786E+01		
73	M	4.080E+00	-7.962E+00	1.644E+00	-1.111E+01	7.646E+00
73	B	5.932E-01	5.400E+00	-3.458E+01		
74	T	-1.682E+01	-1.832E+01	3.844E+01		
74	M	3.600E+00	-5.292E+00	2.316E+00	-1.484E+01	1.750E+00
74	B	2.402E+01	7.734E+00	-3.381E+01		
75	T	-4.705E+01	-1.603E+01	3.360E+01		
75	M	2.967E+00	-2.750E+00	3.103E+00	-1.806E+01	-3.617E+00
75	B	5.299E+01	1.053E+01	-2.739E+01		
76	T	-7.820E+01	-1.475E+01	2.878E+01		
76	M	2.264E+00	-6.868E-01	3.788E+00	-2.063E+01	-2.760E+00
76	B	8.272E+01	1.338E+01	-2.120E+01		
77	T	-6.012E+01	-1.036E+01	-1.867E+01		
77	M	-6.962E+00	-2.100E+00	-5.832E+00	1.289E+01	-2.208E+00
77	B	4.620E+01	6.156E+00	7.010E+00		
78	T	-3.653E+01	-9.420E+00	-2.299E+01		
78	M	-6.232E+00	-4.156E+00	-4.858E+00	9.671E+00	-3.395E+00
78	B	2.406E+01	1.109E+00	1.327E+01		
79	T	-1.915E+01	-9.176E+00	-2.712E+01		
79	M	-5.760E+00	-6.207E+00	-4.077E+00	6.992E+00	-9.756E-01
79	B	7.634E+00	-3.239E+00	1.896E+01		
80	T	-7.073E+00	-9.339E+00	-2.849E+01		
80	M	-5.655E+00	-8.047E+00	-3.533E+00	4.821E+00	1.708E+00
80	B	-4.238E+00	-6.756E+00	2.142E+01		
81	T	7.089E-01	-9.699E+00	-2.749E+01		
81	M	-5.956E+00	-9.588E+00	-3.216E+00	3.166E+00	4.089E+00
81	B	-1.262E+01	-9.478E+00	2.106E+01		
82	T	5.024E+00	-9.965E+00	-2.480E+01		
82	M	-6.766E+00	-1.070E+01	-3.128E+00	1.965E+00	6.089E+00
82	B	-1.856E+01	-1.143E+01	1.855E+01		

Combined Plate Stresses

Plate		Sigma-X	Sigma-Y	Tau-XY	Tau-XZ	Tau-YZ
83	T	6.140E+00	-9.842E+00	-2.085E+01		
83	M	-8.402E+00	-1.138E+01	-3.199E+00	1.031E+00	7.735E+00
83	B	-2.294E+01	-1.292E+01	1.445E+01		
84	T	2.828E+00	-8.023E+00	-1.602E+01		
84	M	-1.168E+01	-1.040E+01	-3.528E+00	-7.479E-02	9.263E+00
84	B	-2.620E+01	-1.278E+01	8.965E+00		
85	T	-7.037E+00	-6.799E+00	-6.848E+00		
85	M	-1.737E+01	-1.142E+01	-2.081E+00	-1.905E+00	1.179E+01
85	B	-2.771E+01	-1.605E+01	2.685E+00		
86	T	-2.518E+01	-4.554E+00	1.479E+01		
86	M	-2.797E+01	1.034E+01	-2.369E+00	-3.515E+00	1.676E+01
86	B	-3.077E+01	2.523E+01	-1.953E+01		
87	T	6.506E+01	-6.530E-01	2.548E+01		
87	M	2.190E+01	7.648E+00	2.638E+01	-7.103E-01	1.492E+01
87	B	-2.125E+01	1.595E+01	2.728E+01		
88	T	5.063E+01	-1.194E+01	4.021E+00		
88	M	1.165E+01	-2.126E+01	3.591E-02	1.161E+00	1.213E+01
88	B	-2.733E+01	-3.059E+01	-3.949E+00		
89	T	4.901E+01	-9.639E+00	1.242E+01		
89	M	6.891E+00	-1.442E+01	7.559E-01	-6.636E-01	1.535E+01
89	B	-3.522E+01	-1.919E+01	-1.091E+01		
90	T	4.684E+01	-1.198E+01	2.380E+01		
90	M	6.555E+00	-1.313E+01	8.289E-01	-5.799E+00	1.593E+01
90	B	-3.373E+01	-1.428E+01	-2.214E+01		
91	T	3.488E+01	-1.197E+01	3.416E+01		
91	M	5.867E+00	-1.027E+01	1.525E+00	-1.176E+01	1.392E+01
91	B	-2.315E+01	-8.565E+00	-3.111E+01		
92	T	1.476E+01	-1.133E+01	4.049E+01		
92	M	5.954E+00	-7.735E+00	2.002E+00	-1.742E+01	9.518E+00
92	B	-2.854E+00	-4.143E+00	-3.649E+01		
93	T	-1.892E+01	-1.190E+01	4.133E+01		
93	M	5.653E+00	-5.215E+00	2.697E+00	-2.281E+01	2.597E+00
93	B	3.023E+01	1.471E+00	-3.594E+01		
94	T	-5.986E+01	-1.417E+01	3.621E+01		
94	M	5.395E+00	-2.823E+00	3.729E+00	-2.667E+01	-3.741E+00
94	B	7.065E+01	8.521E+00	-2.875E+01		
95	T	-1.019E+02	-1.710E+01	3.132E+01		
95	M	4.560E+00	-5.862E-01	4.735E+00	-2.940E+01	-2.961E+00
95	B	1.110E+02	1.593E+01	-2.185E+01		
96	T	-6.950E+01	-1.176E+01	-1.934E+01		
96	M	-6.880E+00	-2.081E+00	-6.333E+00	1.493E+01	-2.387E+00
96	B	5.574E+01	7.600E+00	6.678E+00		

========== I M A G E S 3 D ==========
= Copyright (c) 1984 Celestial Software Inc. =
==========

COMBINE RESULTS Version 2.0 07/01/90

Combined Plate Stresses

Plate		Sigma-X	Sigma-Y	Tau-XY	Tau-XZ	Tau-YZ
97	T	-4.207E+01	-9.992E+00	-2.341E+01		
97	M	-6.156E+00	-4.079E+00	-5.241E+00	1.166E+01	-3.881E+00
97	B	2.976E+01	1.834E+00	1.292E+01		
98	T	-2.154E+01	-8.514E+00	-2.718E+01		
98	M	-5.704E+00	-6.005E+00	-4.260E+00	8.757E+00	-1.740E+00
98	B	1.013E+01	-3.496E+00	1.866E+01		
99	T	-7.025E+00	-7.215E+00	-2.822E+01		
99	M	-5.568E+00	-7.705E+00	-3.497E+00	6.329E+00	6.279E-01
99	B	-4.110E+00	-8.195E+00	2.123E+01		
100	T	2.655E+00	-6.068E+00	-2.694E+01		
100	M	-5.754E+00	-9.106E+00	-2.953E+00	4.439E+00	2.698E+00
100	B	-1.416E+01	-1.214E+01	2.103E+01		
101	T	8.567E+00	-4.972E+00	-2.386E+01		
101	M	-6.295E+00	-1.017E+01	-2.541E+00	3.019E+00	4.458E+00
101	B	-2.116E+01	-1.538E+01	1.878E+01		
102	T	1.139E+01	-3.555E+00	-1.934E+01		
102	M	-7.217E+00	-1.062E+01	-2.220E+00	1.887E+00	6.038E+00
102	B	-2.583E+01	-1.768E+01	1.490E+01		
103	T	1.157E+01	-2.011E+00	-1.271E+01		
103	M	-8.349E+00	-1.073E+01	-1.373E+00	8.562E-01	7.856E+00
103	B	-2.827E+01	-1.944E+01	9.960E+00		
104	T	1.275E+01	-2.007E+00	-4.977E+00		
104	M	-7.523E+00	-8.240E+00	-2.028E+00	2.728E-01	1.036E+01
104	B	-2.779E+01	-1.447E+01	9.205E-01		
105	T	2.517E+01	5.284E+00	-3.660E+00		
105	M	-4.424E+00	2.004E+00	-2.947E+00	1.490E+00	1.255E+01
105	B	-3.402E+01	-1.276E+00	-2.235E+00		
106	T	2.862E+01	1.207E+01	6.963E+00		
106	M	-5.419E+00	1.754E+00	9.012E+00	4.823E+00	1.094E+01
106	B	-3.946E+01	-8.565E+00	1.106E+01		
107	T	5.115E+01	9.192E+00	1.103E+01		
107	M	8.601E+00	-1.002E+01	7.894E+00	4.241E+00	1.065E+01
107	B	-3.395E+01	-2.924E+01	4.760E+00		
108	T	5.763E+01	2.856E+00	9.361E+00		
108	M	6.430E+00	-1.510E+01	1.877E-01	1.825E+00	1.579E+01
108	B	-4.477E+01	-3.305E+01	-8.986E+00		
109	T	5.852E+01	7.947E-01	2.162E+01		
109	M	5.929E+00	-1.256E+01	1.159E+00	-6.011E+00	1.933E+01
109	B	-4.666E+01	-2.592E+01	-1.931E+01		
110	T	4.790E+01	-4.266E-01	3.378E+01		
110	M	7.530E+00	-1.009E+01	1.372E+00	-1.518E+01	1.818E+01
110	B	-3.284E+01	-1.976E+01	-3.104E+01		

========== I M A G E S 3 D ==========
= Copyright (c) 1984 Celestial Software Inc. =
==========

COMBINE RESULTS Version 2.0 07/01/90

Combined Plate Stresses

Plate		Sigma-X	Sigma-Y	Tau-XY	Tau-XZ	Tau-YZ
111	T	2.073E+01	-6.148E-01	4.148E+01		
111	M	6.835E+00	-7.507E+00	2.026E+00	-2.372E+01	1.304E+01
111	B	-7.059E+00	-1.440E+01	-3.743E+01		
112	T	-1.975E+01	-5.217E+00	4.088E+01		
112	M	8.225E+00	-5.268E+00	2.388E+00	-3.051E+01	4.006E+00
112	B	3.620E+01	-5.319E+00	-3.610E+01		
113	T	-6.950E+01	-1.311E+01	3.679E+01		
113	M	7.896E+00	-3.384E+00	4.413E+00	-3.390E+01	-3.761E+00
113	B	8.529E+01	6.338E+00	-2.796E+01		
114	T	-1.211E+02	-1.922E+01	3.244E+01		
114	M	6.665E+00	-6.125E-01	5.746E+00	-3.645E+01	-3.023E+00
114	B	1.344E+02	1.800E+01	-2.095E+01		
115	T	-8.043E+01	-1.384E+01	-2.029E+01		
115	M	-6.532E+00	-2.120E+00	-6.952E+00	1.738E+01	-2.458E+00
115	B	6.737E+01	9.603E+00	6.385E+00		
116	T	-4.822E+01	-1.169E+01	-2.369E+01		
116	M	-5.811E+00	-4.164E+00	-5.667E+00	1.387E+01	-4.101E+00
116	B	3.660E+01	3.357E+00	1.235E+01		
117	T	-2.407E+01	-9.169E+00	-2.676E+01		
117	M	-5.413E+00	-5.945E+00	-4.450E+00	1.053E+01	-2.239E+00
117	B	1.324E+01	-2.721E+00	1.786E+01		
118	T	-6.939E+00	-6.643E+00	-2.734E+01		
118	M	-5.295E+00	-7.458E+00	-3.503E+00	7.771E+00	-2.963E-01
118	B	-3.651E+00	-8.274E+00	2.033E+01		
119	T	4.815E+00	-4.298E+00	-2.576E+01		
119	M	-5.349E+00	-8.737E+00	-2.781E+00	5.657E+00	1.370E+00
119	B	-1.551E+01	-1.318E+01	2.020E+01		
120	T	1.258E+01	-2.047E+00	-2.246E+01		
120	M	-5.562E+00	-9.691E+00	-2.212E+00	4.065E+00	2.822E+00
120	B	-2.371E+01	-1.734E+01	1.804E+01		
121	T	1.742E+01	3.250E-01	-1.766E+01		
121	M	-5.827E+00	-1.020E+01	-1.738E+00	2.885E+00	4.203E+00
121	B	-2.907E+01	-2.073E+01	1.419E+01		
122	T	2.081E+01	2.910E+00	-1.209E+01		
122	M	-5.607E+00	-9.702E+00	-1.793E+00	2.214E+00	5.696E+00
122	B	-3.203E+01	-2.231E+01	8.508E+00		
123	T	2.421E+01	7.250E+00	-7.777E+00		
123	M	-5.602E+00	-6.496E+00	-2.483E+00	2.416E+00	7.100E+00
123	B	-3.541E+01	-2.024E+01	2.810E+00		
124	T	2.599E+01	1.312E+01	-2.669E+00		
124	M	-7.157E+00	-2.184E+00	-5.102E-01	3.524E+00	7.800E+00
124	B	-4.031E+01	-1.749E+01	1.649E+00		

I M A G E S 3 D
= Copyright (c) 1984 Celestial Software Inc. =

COMBINE RESULTS Version 2.0 07/01/90

Combined Plate Stresses

Plate		Sigma-X	Sigma-Y	Tau-XY	Tau-XZ	Tau-YZ
125	T	3.369E+01	1.927E+01	5.053E+00		
125	M	-4.596E+00	-1.731E+00	3.995E+00	5.128E+00	7.329E+00
125	B	-4.288E+01	-2.274E+01	2.938E+00		
126	T	4.237E+01	2.334E+01	9.501E+00		
126	M	-2.281E+00	-5.755E+00	5.086E+00	6.094E+00	7.349E+00
126	B	-4.693E+01	-3.485E+01	6.702E-01		
127	T	5.621E+01	2.461E+01	6.399E+00		
127	M	-9.251E-01	-1.151E+01	-5.196E-01	9.471E+00	1.595E+01
127	B	-5.806E+01	-4.762E+01	-7.438E+00		
128	T	7.795E+01	2.559E+01	1.402E+01		
128	M	6.305E+00	-1.304E+01	-1.304E+00	-3.512E-01	3.004E+01
128	B	-6.534E+01	-5.167E+01	-1.663E+01		
129	T	6.503E+01	2.682E+01	3.088E+01		
129	M	6.266E+00	-9.422E+00	1.947E-01	-2.487E+01	3.180E+01
129	B	-5.250E+01	-4.566E+01	-3.049E+01		
130	T	3.678E+01	2.025E+01	3.477E+01		
130	M	1.319E+01	-7.011E+00	-1.010E+00	-3.932E+01	1.820E+01
130	B	-1.039E+01	-3.427E+01	-3.679E+01		
131	T	-1.914E+01	2.173E+00	3.857E+01		
131	M	1.286E+01	-7.346E+00	2.755E+00	-3.912E+01	3.889E+00
131	B	4.486E+01	-1.687E+01	-3.306E+01		
132	T	-8.276E+01	-1.286E+01	3.473E+01		
132	M	1.115E+01	-4.560E+00	5.921E+00	-4.208E+01	-3.629E+00
132	B	1.050E+02	3.739E+00	-2.289E+01		
133	T	-1.411E+02	-2.246E+01	3.249E+01		
133	M	9.140E+00	-7.951E-01	7.475E+00	-4.486E+01	-3.061E+00
133	B	1.594E+02	2.087E+01	-1.754E+01		
134	T	-9.141E+01	-1.624E+01	-2.158E+01		
134	M	-6.009E+00	-2.248E+00	-7.658E+00	2.019E+01	-2.287E+00
134	B	7.939E+01	1.174E+01	6.266E+00		
135	T	-5.392E+01	-1.393E+01	-2.391E+01		
135	M	-5.231E+00	-4.416E+00	-6.030E+00	1.603E+01	-3.796E+00
135	B	4.346E+01	5.097E+00	1.185E+01		
136	T	-2.625E+01	-1.054E+01	-2.604E+01		
136	M	-5.066E+00	-5.988E+00	-4.559E+00	1.202E+01	-2.289E+00
136	B	1.611E+01	-1.439E+00	1.692E+01		
137	T	-6.830E+00	-7.149E+00	-2.610E+01		
137	M	-4.952E+00	-7.277E+00	-3.546E+00	8.971E+00	-9.204E-01
137	B	-3.073E+00	-7.405E+00	1.900E+01		
138	T	6.845E+00	-3.976E+00	-2.431E+01		
138	M	-4.919E+00	-8.429E+00	-2.732E+00	6.686E+00	2.945E-01
138	B	-1.668E+01	-1.288E+01	1.885E+01		

I M A G E S 3 D
= Copyright (c) 1984 Celestial Software Inc. =

COMBINE RESULTS Version 2.0 07/01/90

Combined Plate Stresses

Plate		Sigma-X	Sigma-Y	Tau-XY	Tau-XZ	Tau-YZ
139	T	1.633E+01	-9.484E-01	-2.088E+01		
139	M	-4.918E+00	-9.282E+00	-2.105E+00	4.966E+00	1.391E+00
139	B	-2.617E+01	-1.762E+01	1.667E+01		
140	T	2.291E+01	2.300E+00	-1.615E+01		
140	M	-4.830E+00	-9.573E+00	-1.787E+00	3.779E+00	2.415E+00
140	B	-3.257E+01	-2.144E+01	1.257E+01		
141	T	2.741E+01	6.552E+00	-1.096E+01		
141	M	-4.928E+00	-8.514E+00	-1.877E+00	3.283E+00	3.351E+00
141	B	-3.727E+01	-2.358E+01	7.203E+00		
142	T	3.007E+01	1.147E+01	-5.643E+00		
142	M	-5.643E+00	-6.450E+00	-1.341E+00	3.497E+00	3.975E+00
142	B	-4.135E+01	-2.437E+01	2.960E+00		
143	T	3.267E+01	1.646E+01	-3.641E-01		
143	M	-6.020E+00	-4.447E+00	-3.576E-02	4.073E+00	4.158E+00
143	B	-4.471E+01	-2.535E+01	2.926E-01		
144	T	3.646E+01	2.271E+01	7.121E+00		
144	M	-6.276E+00	-3.539E+00	2.563E+00	5.055E+00	3.855E+00
144	B	-4.901E+01	-2.978E+01	-1.996E+00		
145	T	4.192E+01	3.173E+01	1.477E+01		
145	M	-5.933E+00	-4.446E+00	4.529E+00	6.779E+00	3.956E+00
145	B	-5.379E+01	-4.062E+01	-5.714E+00		
146	T	4.435E+01	4.688E+01	1.305E+01		
146	M	-1.021E+01	-3.972E+00	2.892E+00	1.277E+01	2.651E+00
146	B	-6.476E+01	-5.482E+01	-7.267E+00		
147	T	5.687E+01	8.072E+01	-4.832E+00		
147	M	-2.333E+01	-1.168E+01	-1.567E+01	4.257E+01	6.398E+01
147	B	-1.035E+02	-1.041E+02	-2.651E+01		
148	T	1.429E+02	8.128E+01	-4.174E+00		
148	M	3.536E+01	-1.138E+01	-1.295E+01	-8.403E+01	6.816E+01
148	B	-7.223E+01	-1.040E+02	-2.174E+01		
149	T	4.893E+01	2.795E+01	3.066E+01		
149	M	2.284E+01	-1.196E+01	1.559E+00	-5.303E+01	5.853E+00
149	B	-3.261E+00	-5.187E+01	-2.755E+01		
150	T	-1.915E+01	1.019E+01	3.290E+01		
150	M	1.665E+01	-9.122E+00	5.439E+00	-4.527E+01	8.401E-01
150	B	5.245E+01	-2.843E+01	-2.202E+01		
151	T	-6.826E+01	-3.134E+01	4.868E+01		
151	M	1.630E+01	-9.216E+00	8.873E-01	-4.559E+01	1.296E+01
151	B	1.009E+02	1.291E+01	-4.691E+01		
152	T	-1.669E+02	-2.322E+01	3.284E+01		
152	M	1.229E+01	-2.193E+00	1.101E+01	-5.685E+01	-2.699E-01
152	B	1.915E+02	1.883E+01	-1.081E+01		

========== I M A G E S 3 D ==========
= Copyright (c) 1984 Celestial Software Inc. =
==========

COMBINE RESULTS Version 2.0 07/01/90

Combined Plate Stresses

Plate		Sigma-X	Sigma-Y	Tau-XY	Tau-XZ	Tau-YZ
153	T	-1.027E+02	-1.826E+01	-2.356E+01		
153	M	-4.919E+00	-2.739E+00	-8.510E+00	2.447E+01	-1.127E+00
153	B	9.288E+01	1.278E+01	6.538E+00		
154	T	-5.761E+01	-1.570E+01	-2.450E+01		
154	M	-4.686E+00	-5.037E+00	-6.014E+00	1.749E+01	-2.279E+00
154	B	4.824E+01	5.630E+00	1.247E+01		
155	T	-2.769E+01	-1.238E+01	-2.498E+01		
155	M	-4.654E+00	-6.002E+00	-4.661E+00	1.299E+01	-1.958E+00
155	B	1.838E+01	3.749E-01	1.566E+01		
156	T	-6.732E+00	-8.688E+00	-2.468E+01		
156	M	-4.607E+00	-7.176E+00	-3.582E+00	9.847E+00	-1.260E+00
156	B	-2.482E+00	-5.663E+00	1.752E+01		
157	T	8.492E+00	-5.404E+00	-2.277E+01		
157	M	-4.585E+00	-8.164E+00	-2.741E+00	7.490E+00	-5.011E-01
157	B	-1.766E+01	-1.092E+01	1.728E+01		
158	T	1.950E+01	-2.192E+00	-1.929E+01		
158	M	-4.594E+00	-8.847E+00	-2.125E+00	5.629E+00	2.212E-01
158	B	-2.869E+01	-1.550E+01	1.504E+01		
159	T	2.711E+01	1.350E+00	-1.444E+01		
159	M	-4.667E+00	-8.896E+00	-1.778E+00	4.363E+00	7.987E-01
159	B	-3.645E+01	-1.914E+01	1.089E+01		
160	T	3.219E+01	5.624E+00	-8.744E+00		
160	M	-5.013E+00	-8.036E+00	-1.441E+00	3.762E+00	1.221E+00
160	B	-4.221E+01	-2.170E+01	5.863E+00		
161	T	3.550E+01	1.004E+01	-2.985E+00		
161	M	-5.508E+00	-6.662E+00	-7.042E-01	3.722E+00	1.406E+00
161	B	-4.652E+01	-2.336E+01	1.576E+00		
162	T	3.801E+01	1.413E+01	2.628E+00		
162	M	-5.996E+00	-5.453E+00	4.784E-01	3.954E+00	1.340E+00
162	B	-5.000E+01	-2.504E+01	-1.671E+00		
163	T	4.171E+01	1.982E+01	1.074E+01		
163	M	-6.224E+00	-4.682E+00	2.554E+00	4.515E+00	8.713E-01
163	B	-5.416E+01	-2.919E+01	-5.627E+00		
164	T	4.610E+01	2.796E+01	2.084E+01		
164	M	-6.729E+00	-4.742E+00	5.034E+00	5.945E+00	-5.551E-01
164	B	-5.956E+01	-3.744E+01	-1.078E+01		
165	T	4.854E+01	4.312E+01	3.495E+01		
165	M	-9.559E+00	-4.412E+00	8.044E+00	9.805E+00	-2.738E+00
165	B	-6.766E+01	-5.194E+01	-1.887E+01		
166	T	5.553E+01	4.454E+01	6.561E+01		
166	M	-2.178E+01	-5.800E+00	1.958E+01	3.408E+01	-4.528E+01
166	B	-9.909E+01	-5.614E+01	-2.645E+01		

========== I M A G E S 3 D ==========
= Copyright (c) 1984 Celestial Software Inc. =
==========

COMBINE RESULTS Version 2.0 07/01/90

Combined Plate Stresses

Plate		Sigma-X	Sigma-Y	Tau-XY	Tau-XZ	Tau-YZ
167	T	1.304E+02	4.457E+01	3.771E+01		
167	M	3.169E+01	-4.991E+00	2.378E+01	-7.493E+01	-4.967E+01
167	B	-6.698E+01	-5.455E+01	9.849E+00		
168	T	4.333E+01	2.622E+01	2.484E+01		
168	M	2.032E+01	-1.109E+01	1.161E+01	-4.906E+01	-8.968E+00
168	B	-2.702E+00	-4.840E+01	-1.627E+00		
169	T	-2.335E+01	2.712E+00	2.534E+01		
169	M	1.553E+01	-8.447E+00	8.823E+00	-4.479E+01	-2.757E+00
169	B	5.441E+01	-1.961E+01	-7.697E+00		
170	T	-6.632E+01	-3.954E+01	4.690E+01		
170	M	1.636E+01	-1.009E+01	1.971E+00	-4.480E+01	1.573E+01
170	B	9.903E+01	1.936E+01	-4.095E+01		
171	T	-1.700E+02	-4.075E+01	4.589E+01		
171	M	1.260E+01	-8.358E+00	1.097E+01	-5.457E+01	1.566E+01
171	B	1.952E+02	2.403E+01	-2.395E+01		
172	T	-1.069E+02	-2.974E+01	-3.597E+01		
172	M	-3.178E+00	-7.326E+00	-8.618E+00	2.215E+01	6.986E+00
172	B	1.006E+02	1.509E+01	1.874E+01		
173	T	-6.966E+01	-1.904E+01	-2.595E+01		
173	M	-3.739E+00	-5.070E+00	-6.656E+00	1.825E+01	8.763E-01
173	B	6.218E+01	8.904E+00	1.264E+01		
174	T	-3.360E+01	-1.468E+01	-2.406E+01		
174	M	-3.934E+00	-6.067E+00	-4.876E+00	1.444E+01	-1.397E+00
174	B	2.573E+01	2.544E+00	1.431E+01		
175	T	-7.277E+00	-1.131E+01	-2.305E+01		
175	M	-4.176E+00	-6.955E+00	-3.603E+00	1.111E+01	-1.558E+00
175	B	-1.076E+00	-2.604E+00	1.585E+01		
176	T	1.067E+01	-8.407E+00	-2.090E+01		
176	M	-4.348E+00	-7.874E+00	-2.660E+00	8.473E+00	-1.129E+00
176	B	-1.936E+01	-7.341E+00	1.558E+01		
177	T	2.275E+01	-5.616E+00	-1.711E+01		
177	M	-4.547E+00	-8.314E+00	-2.037E+00	6.480E+00	-8.687E-01
177	B	-3.185E+01	-1.101E+01	1.303E+01		
178	T	3.133E+01	-2.571E+00	-1.210E+01		
178	M	-4.811E+00	-8.273E+00	-1.553E+00	4.938E+00	-8.044E-01
178	B	-4.095E+01	-1.398E+01	8.992E+00		
179	T	3.723E+01	8.485E-01	-6.209E+00		
179	M	-5.187E+00	-7.695E+00	-9.686E-01	3.948E+00	-8.794E-01
179	B	-4.761E+01	-1.624E+01	4.272E+00		
180	T	4.119E+01	4.054E+00	-3.647E-01		
180	M	-5.572E+00	-6.927E+00	-1.429E-01	3.459E+00	-1.063E+00
180	B	-5.234E+01	-1.791E+01	7.893E-02		

========== I M A G E S 3 D ==========
= Copyright (c) 1984 Celestial Software Inc. =
==========

COMBINE RESULTS Version 2.0 07/01/90

Combined Plate Stresses

Plate		Sigma-X	Sigma-Y	Tau-XY	Tau-XZ	Tau-YZ
181	T	4.426E+01	6.878E+00	5.211E+00		
181	M	-5.813E+00	-6.285E+00	8.794E-01	3.224E+00	-1.337E+00
181	B	-5.589E+01	-1.945E+01	-3.452E+00		
182	T	4.838E+01	1.060E+01	1.349E+01		
182	M	-5.860E+00	-5.891E+00	2.653E+00	3.064E+00	-2.094E+00
182	B	-6.010E+01	-2.238E+01	-8.186E+00		
183	T	5.394E+01	1.525E+01	2.522E+01		
183	M	-5.636E+00	-5.945E+00	5.309E+00	3.032E+00	-3.874E+00
183	B	-6.521E+01	-2.715E+01	-1.461E+01		
184	T	6.356E+01	1.344E+01	3.821E+01		
184	M	-3.932E+00	-8.291E+00	8.942E+00	3.048E+00	-1.109E+01
184	B	-7.142E+01	-3.002E+01	-2.033E+01		
185	T	8.049E+01	5.631E+00	3.422E+01		
185	M	4.657E+00	-7.889E+00	7.584E+00	-1.098E+01	-1.537E+01
185	B	-7.118E+01	-2.141E+01	-1.905E+01		
186	T	5.529E+01	5.918E+00	1.916E+01		
186	M	5.184E-01	-4.626E+00	8.225E+00	-1.713E+01	-1.700E+01
186	B	-5.426E+01	-1.517E+01	-2.711E+00		
187	T	2.833E+01	8.639E+00	2.023E+01		
187	M	9.235E+00	-3.921E+00	1.244E+01	-3.428E+01	-1.443E+01
187	B	-9.862E+00	-1.648E+01	4.644E+00		
188	T	-2.427E+01	-3.281E+00	2.085E+01		
188	M	1.087E+01	-6.538E+00	1.056E+01	-3.730E+01	-4.569E+00
188	B	4.601E+01	-9.795E+00	2.748E-01		
189	T	-8.501E+01	-1.761E+01	2.800E+01		
189	M	1.049E+01	-6.249E+00	9.976E+00	-3.784E+01	5.092E+00
189	B	1.060E+02	5.111E+00	-8.049E+00		
190	T	-1.465E+02	-3.675E+01	4.194E+01		
190	M	1.097E+01	-8.555E+00	9.937E+00	-3.572E+01	1.297E+01
190	B	1.685E+02	1.964E+01	-2.206E+01		
191	T	-9.441E+01	-2.646E+01	-2.894E+01		
191	M	-5.766E-01	-7.210E+00	-7.467E+00	1.340E+01	7.192E+00
191	B	9.326E+01	1.204E+01	1.401E+01		
192	T	-7.527E+01	-1.939E+01	-2.612E+01		
192	M	-2.636E+00	-6.148E+00	-6.861E+00	1.809E+01	7.004E+00
192	B	7.000E+01	7.090E+00	1.240E+01		
193	T	-3.753E+01	-1.355E+01	-2.228E+01		
193	M	-3.370E+00	-5.922E+00	-4.783E+00	1.602E+01	4.781E+00
193	B	3.079E+01	1.709E+00	1.272E+01		
194	T	-7.043E+00	-1.062E+01	-2.065E+01		
194	M	-3.877E+00	-6.936E+00	-3.424E+00	1.274E+01	4.233E+00
194	B	-7.123E-01	-3.251E+00	1.380E+01		

========== I M A G E S 3 D ==========
= Copyright (c) 1984 Celestial Software Inc. =
==========

COMBINE RESULTS Version 2.0 07/01/90

Combined Plate Stresses

Plate		Sigma-X	Sigma-Y	Tau-XY	Tau-XZ	Tau-YZ
195	T	1.279E+01	-8.296E+00	-1.801E+01		
195	M	-4.334E+00	-7.590E+00	-2.442E+00	1.001E+01	4.259E+00
195	B	-2.146E+01	-6.884E+00	1.312E+01		
196	T	2.526E+01	-6.351E+00	-1.453E+01		
196	M	-4.725E+00	-7.912E+00	-1.832E+00	7.809E+00	4.306E+00
196	B	-3.471E+01	-9.474E+00	1.086E+01		
197	T	3.431E+01	-4.141E+00	-9.865E+00		
197	M	-5.113E+00	-7.863E+00	-1.293E+00	5.674E+00	4.115E+00
197	B	-4.454E+01	-1.158E+01	7.280E+00		
198	T	4.066E+01	-1.872E+00	-4.541E+00		
198	M	-5.483E+00	-7.503E+00	-6.555E-01	3.951E+00	3.718E+00
198	B	-5.162E+01	-1.313E+01	3.230E+00		
199	T	4.505E+01	1.562E-01	5.723E-01		
199	M	-5.730E+00	-7.064E+00	1.160E-01	2.776E+00	3.347E+00
199	B	-5.651E+01	-1.428E+01	-3.402E-01		
200	T	4.849E+01	1.793E+00	5.336E+00		
200	M	-5.806E+00	-6.758E+00	9.825E-01	1.799E+00	3.000E+00
200	B	-6.011E+01	-1.531E+01	-3.371E+00		
201	T	5.329E+01	3.681E+00	1.235E+01		
201	M	-5.481E+00	-6.608E+00	2.395E+00	4.801E-01	2.256E+00
201	B	-6.425E+01	-1.690E+01	-7.565E+00		
202	T	6.074E+01	4.108E+00	2.191E+01		
202	M	-4.203E+00	-7.364E+00	4.602E+00	-1.368E+00	2.762E-01
202	B	-6.914E+01	-1.884E+01	-1.271E+01		
203	T	6.935E+01	1.280E+00	2.683E+01		
203	M	-8.400E-01	-7.774E+00	5.167E+00	-5.832E+00	-2.017E+00
203	B	-7.103E+01	-1.683E+01	-1.649E+01		
204	T	6.534E+01	-1.803E+00	2.483E+01		
204	M	1.862E-01	-7.078E+00	5.870E+00	-1.174E+01	-3.770E+00
204	B	-6.496E+01	-1.235E+01	-1.309E+01		
205	T	5.126E+01	-3.645E+00	2.145E+01		
205	M	3.948E+00	-5.966E+00	6.910E+00	-1.884E+01	-3.557E+00
205	B	-4.337E+01	-8.288E+00	-7.626E+00		
206	T	1.963E+01	-5.093E+00	1.768E+01		
206	M	4.061E+00	-5.160E+00	7.582E+00	-2.354E+01	-1.854E+00
206	B	-1.151E+01	-5.227E+00	-2.516E+00		
207	T	-2.419E+01	-7.632E+00	1.942E+01		
207	M	7.023E+00	-4.833E+00	9.544E+00	-2.890E+01	1.558E+00
207	B	3.824E+01	-2.034E+00	-3.325E-01		
208	T	-8.300E+01	-1.713E+01	2.542E+01		
208	M	8.708E+00	-5.812E+00	9.868E+00	-2.984E+01	8.081E+00
208	B	1.004E+02	5.506E+00	-5.679E+00		

Combined Plate Stresses

Plate		Sigma-X	Sigma-Y	Tau-XY	Tau-XZ	Tau-YZ
209	T	-1.266E+02	-3.052E+01	3.318E+01		
209	M	9.557E+00	-7.749E+00	9.116E+00	-2.125E+01	1.058E+01
209	B	1.457E+02	1.503E+01	-1.495E+01		
210	T	-9.152E+01	-1.721E+01	-2.496E+01		
210	M	1.913E+00	-2.856E-01	-9.023E+00	1.688E+01	3.524E+00
210	B	9.534E+01	1.664E+01	6.915E+00		
211	T	-6.330E+01	-1.079E+01	-3.213E+01		
211	M	-6.892E-02	6.349E-01	-8.484E+00	1.739E+01	6.573E+00
211	B	6.316E+01	1.206E+01	1.516E+01		
212	T	-3.132E+01	-2.175E+00	-3.066E+01		
212	M	-1.952E+00	4.057E-01	-6.351E+00	1.583E+01	6.555E+00
212	B	2.742E+01	2.986E+00	1.796E+01		
213	T	-3.887E+00	2.874E+00	-2.748E+01		
213	M	-3.388E+00	-5.306E-01	-4.266E+00	1.281E+01	5.802E+00
213	B	-2.890E+00	-3.935E+00	1.895E+01		
214	T	1.467E+01	6.609E+00	-2.372E+01		
214	M	-4.517E+00	-1.204E+00	-3.007E+00	1.015E+01	5.666E+00
214	B	-2.370E+01	-9.017E+00	1.770E+01		
215	T	2.677E+01	9.698E+00	-1.879E+01		
215	M	-5.300E+00	-1.493E+00	-2.182E+00	7.923E+00	5.667E+00
215	B	-3.737E+01	-1.268E+01	1.443E+01		
216	T	3.565E+01	1.258E+01	-1.238E+01		
216	M	-5.930E+00	-1.452E+00	-1.456E+00	5.650E+00	5.562E+00
216	B	-4.751E+01	-1.548E+01	9.471E+00		
217	T	4.200E+01	1.520E+01	-4.988E+00		
217	M	-6.363E+00	-1.147E+00	-6.269E-01	3.844E+00	5.336E+00
217	B	-5.473E+01	-1.749E+01	3.734E+00		
218	T	4.655E+01	1.735E+01	2.067E+00		
218	M	-6.532E+00	-8.141E-01	2.924E-01	2.666E+00	5.034E+00
218	B	-5.962E+01	-1.898E+01	-1.482E+00		
219	T	5.019E+01	1.900E+01	8.481E+00		
219	M	-6.432E+00	-5.933E-01	1.245E+00	1.532E+00	4.642E+00
219	B	-6.305E+01	-2.019E+01	-5.991E+00		
220	T	5.496E+01	2.003E+01	1.729E+01		
220	M	-5.705E+00	-7.107E-01	2.724E+00	-1.740E-01	3.699E+00
220	B	-6.637E+01	-2.146E+01	-1.184E+01		
221	T	6.120E+01	1.897E+01	2.678E+01		
221	M	-3.645E+00	-1.185E+00	4.276E+00	-3.063E+00	2.000E+00
221	B	-6.849E+01	-2.134E+01	-1.823E+01		
222	T	6.363E+01	1.480E+01	3.133E+01		
222	M	-1.134E+00	-1.382E+00	5.256E+00	-7.472E+00	3.330E-01
222	B	-6.590E+01	-1.756E+01	-2.081E+01		

Combined Plate Stresses

Plate		Sigma-X	Sigma-Y	Tau-XY	Tau-XZ	Tau-YZ
223	T	5.793E+01	1.042E+01	3.003E+01		
223	M	1.747E+00	-6.598E-01	6.069E+00	-1.259E+01	-5.202E-01
223	B	-5.444E+01	-1.174E+01	-1.790E+01		
224	T	4.193E+01	7.420E+00	2.700E+01		
224	M	3.544E+00	3.338E-01	7.252E+00	-1.734E+01	-1.923E-01
224	B	-3.484E+01	-6.752E+00	-1.250E+01		
225	T	1.877E+01	4.975E+00	2.488E+01		
225	M	6.128E+00	1.194E+00	8.833E+00	-2.143E+01	1.367E+00
225	B	-6.515E+00	-2.588E+00	-7.219E+00		
226	T	-1.790E+01	8.923E-01	2.580E+01		
226	M	8.591E+00	1.660E+00	1.091E+01	-2.513E+01	4.571E+00
226	B	3.509E+01	2.427E+00	-3.983E+00		
227	T	-6.371E+01	-9.557E+00	3.084E+01		
227	M	1.144E+01	1.504E+00	1.266E+01	-2.629E+01	8.147E+00
227	B	8.660E+01	1.256E+01	-5.523E+00		
228	T	-1.108E+02	-2.000E+01	2.714E+01		
228	M	1.353E+01	7.226E-01	1.261E+01	-2.234E+01	5.470E+00
228	B	1.379E+02	2.145E+01	-1.920E+00		
229	T	-1.038E+02	-1.221E+01	-1.813E+01		
229	M	5.008E+00	3.199E-01	-7.674E+00	1.759E+01	-5.942E-01
229	B	1.138E+02	1.285E+01	2.785E+00		
230	T	-6.176E+01	-8.505E-01	-2.137E+01		
230	M	2.790E+00	5.238E-01	-6.680E+00	1.231E+01	-1.911E+00
230	B	6.734E+01	1.898E+00	8.006E+00		
231	T	-2.866E+01	3.134E+00	-2.212E+01		
231	M	-6.595E-01	-2.457E-01	-4.560E+00	9.975E+00	-1.819E+00
231	B	2.734E+01	-3.625E+00	1.300E+01		
232	T	-1.859E+00	6.078E+00	-2.010E+01		
232	M	-3.406E+00	-6.418E-01	-2.976E+00	8.018E+00	-2.341E+00
232	B	-4.953E+00	-7.361E+00	1.414E+01		
233	T	1.761E+01	8.214E+00	-1.729E+01		
233	M	-5.168E+00	-9.491E-01	-2.024E+00	6.227E+00	-2.665E+00
233	B	-2.795E+01	-1.011E+01	1.324E+01		
234	T	3.079E+01	9.902E+00	-1.359E+01		
234	M	-6.299E+00	-1.079E+00	-1.448E+00	4.818E+00	-2.811E+00
234	B	-4.338E+01	-1.206E+01	1.069E+01		
235	T	4.076E+01	1.141E+01	-8.686E+00		
235	M	-7.079E+00	-1.060E+00	-9.384E-01	3.540E+00	-2.833E+00
235	B	-5.492E+01	-1.353E+01	6.809E+00		
236	T	4.812E+01	1.266E+01	-2.899E+00		
236	M	-7.499E+00	-9.397E-01	-3.709E-01	2.643E+00	-2.778E+00
236	B	-6.312E+01	-1.454E+01	2.158E+00		

Combined Plate Stresses

Plate		Sigma-X	Sigma-Y	Tau-XY	Tau-XZ	Tau-YZ
237	T	5.338E+01	1.352E+01	2.639E+00		
237	M	-7.559E+00	-8.202E-01	2.249E-01	2.117E+00	-2.850E+00
237	B	-6.850E+01	-1.516E+01	-2.189E+00		
238	T	5.735E+01	1.395E+01	7.488E+00		
238	M	-7.330E+00	-7.874E-01	8.094E-01	1.595E+00	-3.081E+00
238	B	-7.201E+01	-1.553E+01	-5.869E+00		
239	T	6.159E+01	1.371E+01	1.345E+01		
239	M	-6.460E+00	-8.696E-01	1.546E+00	5.810E-01	-3.546E+00
239	B	-7.451E+01	-1.545E+01	-1.036E+01		
240	T	6.476E+01	1.219E+01	1.910E+01		
240	M	-4.832E+00	-1.045E+00	2.319E+00	-1.474E+00	-4.201E+00
240	B	-7.442E+01	-1.428E+01	-1.446E+01		
241	T	6.197E+01	9.533E+00	2.123E+01		
241	M	-2.558E+00	-1.021E+00	2.876E+00	-4.569E+00	-4.694E+00
241	B	-6.709E+01	-1.157E+01	-1.548E+01		
242	T	5.142E+01	7.079E+00	2.034E+01		
242	M	-3.093E-01	-6.960E-01	3.536E+00	-8.059E+00	-4.780E+00
242	B	-5.203E+01	-8.471E+00	-1.327E+01		
243	T	3.505E+01	5.577E+00	1.848E+01		
243	M	1.981E+00	-2.505E-01	4.418E+00	-1.112E+01	-4.384E+00
243	B	-3.109E+01	-6.078E+00	-9.642E+00		
244	T	1.321E+01	4.485E+00	1.705E+01		
244	M	4.271E+00	1.269E-01	5.577E+00	-1.373E+01	-3.473E+00
244	B	-4.669E+00	-4.231E+00	-5.898E+00		
245	T	-1.767E+01	2.803E+00	1.711E+01		
245	M	7.722E+00	3.048E-01	7.289E+00	-1.584E+01	-1.942E+00
245	B	3.312E+01	-2.193E+00	-2.531E+00		
246	T	-5.830E+01	6.975E-01	1.794E+01		
246	M	1.236E+01	1.229E+00	9.792E+00	-1.714E+01	-7.206E-01
246	B	8.301E+01	1.760E+00	1.648E+00		
247	T	-1.172E+02	-1.288E+01	1.850E+01		
247	M	1.574E+01	1.391E+00	1.110E+01	-2.113E+01	4.573E-01
247	B	1.487E+02	1.567E+01	3.710E+00		
248	T	-9.662E+01	-9.430E+00	-9.112E+00		
248	M	1.338E+01	8.625E-01	-4.934E+00	1.722E+01	1.072E+00
248	B	1.234E+02	1.116E+01	-7.562E-01		
249	T	-6.141E+01	-2.277E-01	-1.247E+01		
249	M	5.175E+00	2.388E-02	-2.761E+00	1.756E+01	2.535E-01
249	B	7.176E+01	2.754E-01	6.947E+00		
250	T	-2.935E+01	3.705E-01	-1.272E+01		
250	M	-6.067E-01	-2.347E-01	-1.706E+00	1.618E+01	-6.827E-01
250	B	2.814E+01	-8.398E-01	9.308E+00		

Combined Plate Stresses

Plate		Sigma-X	Sigma-Y	Tau-XY	Tau-XZ	Tau-YZ
251	T	-2.887E+00	1.401E+00	-1.194E+01		
251	M	-4.312E+00	-3.267E-01	-1.083E+00	1.404E+01	-9.539E-01
251	B	-5.737E+00	-2.054E+00	9.770E+00		
252	T	1.666E+01	2.018E+00	-1.030E+01		
252	M	-6.556E+00	-3.904E-01	-7.186E-01	1.159E+01	-1.212E+00
252	B	-2.977E+01	-2.799E+00	8.861E+00		
253	T	3.022E+01	2.467E+00	-8.070E+00		
253	M	-7.917E+00	-4.116E-01	-5.166E-01	9.032E+00	-1.383E+00
253	B	-4.605E+01	-3.290E+00	7.037E+00		
254	T	4.066E+01	2.935E+00	-5.149E+00		
254	M	-8.857E+00	-4.098E-01	-3.426E-01	6.295E+00	-1.491E+00
254	B	-5.837E+01	-3.754E+00	4.463E+00		
255	T	4.850E+01	3.329E+00	-1.728E+00		
255	M	-9.360E+00	-3.824E-01	-1.410E-01	3.610E+00	-1.575E+00
255	B	-6.722E+01	-4.094E+00	1.447E+00		
256	T	5.401E+01	3.539E+00	1.466E+00		
256	M	-9.437E+00	-3.606E-01	7.027E-02	1.324E+00	-1.643E+00
256	B	-7.289E+01	-4.260E+00	-1.326E+00		
257	T	5.796E+01	3.566E+00	4.181E+00		
257	M	-9.197E+00	-3.608E-01	2.569E-01	-6.346E-01	-1.707E+00
257	B	-7.635E+01	-4.287E+00	-3.667E+00		
258	T	6.162E+01	3.379E+00	7.483E+00		
258	M	-8.421E+00	-3.849E-01	4.987E-01	-3.369E+00	-1.764E+00
258	B	-7.846E+01	-4.149E+00	-6.486E+00		
259	T	6.314E+01	2.857E+00	1.048E+01		
259	M	-6.996E+00	-4.169E-01	7.055E-01	-6.980E+00	-1.777E+00
259	B	-7.713E+01	-3.691E+00	-9.072E+00		
260	T	5.781E+01	1.989E+00	1.173E+01		
260	M	-5.164E+00	-4.007E-01	8.730E-01	-1.067E+01	-1.701E+00
260	B	-6.814E+01	-2.790E+00	-9.985E+00		
261	T	4.545E+01	1.228E+00	1.155E+01		
261	M	-3.135E+00	-3.171E-01	1.101E+00	-1.391E+01	-1.541E+00
261	B	-5.172E+01	-1.863E+00	-9.345E+00		
262	T	2.852E+01	8.333E-01	1.087E+01		
262	M	-1.061E+00	-2.165E-01	1.449E+00	-1.633E+01	-1.310E+00
262	B	-3.064E+01	-1.266E+00	-7.973E+00		
263	T	7.736E+00	6.635E-01	1.030E+01		
263	M	1.484E+00	-1.572E-01	1.923E+00	-1.819E+01	-9.884E-01
263	B	-4.769E+00	-9.780E-01	-6.456E+00		
264	T	-2.122E+01	1.609E-01	9.713E+00		
264	M	5.445E+00	-1.214E-01	2.597E+00	-1.968E+01	-6.485E-01
264	B	3.211E+01	-4.037E-01	-4.519E+00		

KAISER ENGINEERS HANFORD S/N:801854 08/29/95
PAGE 139 Run ID=8065974 10:34:50
========== I M A G E S 3 D ==========
= Copyright (c) 1984 Celestial Software Inc. =
COMBINE RESULTS Version 2.0 07/01/90

Combined Plate Stresses

Plate		Sigma-X	Sigma-Y	Tau-XY	Tau-XZ	Tau-YZ
265	T	-5.897E+01	1.030E+00	1.043E+01		
265	M	1.198E+01	-9.131E-03	3.579E+00	-2.038E+01	5.873E-01
265	B	8.294E+01	-1.048E+00	-3.269E+00		
266	T	-1.059E+02	-9.636E+00	8.825E+00		
266	M	2.467E+01	1.633E+00	7.036E+00	-1.875E+01	1.420E+00
266	B	1.552E+02	1.290E+01	5.247E+00		

KAISER ENGINEERS HANFORD S/N:801854 08/29/95
PAGE 140 Run ID=8065974 10:36:13
========== I M A G E S 3 D ==========
= Copyright (c) 1984 Celestial Software Inc. =
COMBINE RESULTS Version 2.0 07/01/90

Combined Plate Stresses

Load Combination Method
F[1,1]+F[1,2]+F[1,3]+F[1,4]+F[1,5]

Plate		Sigma-X	Sigma-Y	Tau-XY	Tau-XZ	Tau-YZ
1	T	-7.779E+00	-9.248E+00	-6.250E+00		
1	M	-1.554E+00	-2.354E+00	-1.407E+00	9.697E-03	1.583E-01
1	B	4.672E+00	4.540E+00	3.436E+00		
2	T	-6.927E+00	-2.399E+01	-1.050E+01		
2	M	-1.428E+00	-5.665E+00	-1.924E+00	-8.441E-01	2.036E+00
2	B	4.072E+00	1.266E+01	6.655E+00		
3	T	-7.516E+00	-3.879E+01	-1.341E+01		
3	M	-1.591E+00	-7.886E+00	-2.322E+00	-1.344E+00	5.816E+00
3	B	4.334E+00	2.302E+01	8.764E+00		
4	T	-8.714E+00	-5.518E+01	-1.458E+01		
4	M	-1.831E+00	-9.776E+00	-2.652E+00	-1.651E+00	9.898E+00
4	B	5.051E+00	3.562E+01	9.277E+00		
5	T	-1.032E+01	-7.159E+01	-1.445E+01		
5	M	-2.118E+00	-1.152E+01	-3.010E+00	-1.730E+00	1.371E+01
5	B	6.087E+00	4.855E+01	8.430E+00		
6	T	-1.206E+01	-8.684E+01	-1.345E+01		
6	M	-2.402E+00	-1.331E+01	-3.425E+00	-1.592E+00	1.699E+01
6	B	7.256E+00	6.022E+01	6.603E+00		
7	T	-1.353E+01	-1.001E+02	-1.184E+01		
7	M	-2.554E+00	-1.535E+01	-3.827E+00	-1.257E+00	1.971E+01
7	B	8.418E+00	6.945E+01	4.186E+00		
8	T	-1.414E+01	-1.101E+02	-9.435E+00		
8	M	-2.263E+00	-1.722E+01	-3.729E+00	-7.914E-01	2.182E+01
8	B	9.609E+00	7.571E+01	1.978E+00		
9	T	-1.441E+01	-1.158E+02	-6.767E+00		
9	M	-2.145E+00	-1.831E+01	-3.228E+00	-3.658E-01	2.321E+01
9	B	1.012E+01	7.921E+01	3.116E-01		
10	T	-1.386E+01	-1.179E+02	-3.872E+00		
10	M	-1.659E+00	-1.839E+01	-2.416E+00	-1.192E-02	2.399E+01
10	B	1.054E+01	8.112E+01	-9.605E-01		
11	T	-1.352E+01	-1.163E+02	2.594E-01		
11	M	-1.699E+00	-1.725E+01	-1.373E+00	4.173E-01	2.417E+01
11	B	1.012E+01	8.177E+01	-3.005E+00		
12	T	-1.235E+01	-1.094E+02	5.379E+00		
12	M	-1.479E+00	-1.497E+01	-4.119E-01	9.197E-01	2.317E+01
12	B	9.395E+00	7.942E+01	-6.203E+00		

========== I M A G E S 3 D ==========
= Copyright (c) 1984 Celestial Software Inc. =
==========
COMBINE RESULTS Version 2.0 07/01/90

Combined Plate Stresses

Plate		Sigma-X	Sigma-Y	Tau-XY	Tau-XZ	Tau-YZ
13	T	-1.107E+01	-9.726E+01	1.002E+01		
13	M	-1.365E+00	-1.253E+01	1.803E-01	1.353E+00	2.054E+01
13	B	8.339E+00	7.221E+01	-9.660E+00		
14	T	-9.690E+00	-8.289E+01	1.349E+01		
14	M	-1.103E+00	-1.051E+01	5.583E-01	1.606E+00	1.692E+01
14	B	7.483E+00	6.187E+01	-1.237E+01		
15	T	-8.835E+00	-6.903E+01	1.546E+01		
15	M	-9.548E-01	-8.985E+00	8.746E-01	1.641E+00	1.310E+01
15	B	6.925E+00	5.106E+01	-1.371E+01		
16	T	-8.361E+00	-5.523E+01	1.608E+01		
16	M	-8.689E-01	-7.539E+00	1.105E+00	1.510E+00	9.088E+00
16	B	6.623E+00	4.015E+01	-1.387E+01		
17	T	-8.308E+00	-3.925E+01	1.485E+01		
17	M	-8.214E-01	-5.754E+00	1.240E+00	1.193E+00	4.470E+00
17	B	6.665E+00	2.775E+01	-1.237E+01		
18	T	-8.772E+00	-2.390E+01	1.151E+01		
18	M	-8.529E-01	-3.779E+00	1.201E+00	7.416E-01	5.422E-01
18	B	7.066E+00	1.635E+01	-9.106E+00		
19	T	-1.026E+01	-9.614E+00	7.436E+00		
19	M	-1.078E+00	-1.520E+00	1.027E+00	8.976E-02	-4.243E-01
19	B	8.105E+00	6.573E+00	-5.382E+00		
20	T	-1.917E+01	-7.941E+00	-1.074E+01		
20	M	-3.143E+00	-1.908E+00	-2.417E+00	1.397E+00	-7.585E-01
20	B	1.288E+01	4.125E+00	5.909E+00		
21	T	-1.285E+01	-1.734E+01	-1.412E+01		
21	M	-2.411E+00	-4.563E+00	-2.172E+00	-4.140E-01	8.740E-02
21	B	8.026E+00	8.211E+00	9.774E+00		
22	T	-9.235E+00	-2.765E+01	-1.771E+01		
22	M	-2.250E+00	-6.865E+00	-2.351E+00	-1.581E+00	3.611E+00
22	B	4.735E+00	1.392E+01	1.300E+01		
23	T	-7.077E+00	-3.866E+01	-1.906E+01		
23	M	-2.380E+00	-8.734E+00	-2.563E+00	-2.360E+00	7.377E+00
23	B	2.318E+00	2.119E+01	1.393E+01		
24	T	-6.162E+00	-4.974E+01	-1.864E+01		
24	M	-2.681E+00	-1.040E+01	-2.847E+00	-2.699E+00	1.085E+01
24	B	7.988E-01	2.893E+01	1.294E+01		
25	T	-6.135E+00	-6.011E+01	-1.709E+01		
25	M	-3.053E+00	-1.208E+01	-3.304E+00	-2.600E+00	1.383E+01
25	B	2.951E-02	3.595E+01	1.048E+01		
26	T	-6.296E+00	-6.924E+01	-1.499E+01		
26	M	-3.218E+00	-1.398E+01	-4.044E+00	-2.069E+00	1.625E+01
26	B	-1.398E-01	4.129E+01	6.899E+00		

========== I M A G E S 3 D ==========
= Copyright (c) 1984 Celestial Software Inc. =
==========
COMBINE RESULTS Version 2.0 07/01/90

Combined Plate Stresses

Plate		Sigma-X	Sigma-Y	Tau-XY	Tau-XZ	Tau-YZ
27	T	-5.517E+00	-7.694E+01	-1.260E+01		
27	M	-2.632E+00	-1.670E+01	-4.897E+00	-1.161E+00	1.814E+01
27	B	2.525E-01	4.355E+01	2.801E+00		
28	T	-3.137E+00	-8.119E+01	-8.690E+00		
28	M	-7.814E-01	-1.853E+01	-4.052E+00	-2.437E-01	1.955E+01
28	B	1.574E+00	4.413E+01	5.869E-01		
29	T	-2.661E+00	-8.264E+01	-5.264E+00		
29	M	-7.912E-01	-1.905E+01	-3.193E+00	2.914E-01	2.044E+01
29	B	1.078E+00	4.454E+01	-1.122E+00		
30	T	-2.772E-01	-8.086E+01	4.203E-01		
30	M	1.839E-01	-1.769E+01	-1.536E+00	8.444E-01	2.069E+01
30	B	6.450E-01	4.549E+01	-3.492E+00		
31	T	1.936E-01	-7.538E+01	6.982E+00		
31	M	-3.078E-01	-1.475E+01	-4.518E-01	1.378E+00	1.973E+01
31	B	-8.093E-01	4.589E+01	-7.886E+00		
32	T	8.006E-01	-6.741E+01	1.281E+01		
32	M	-5.121E-02	-1.209E+01	-2.036E-01	1.894E+00	1.723E+01
32	B	-9.030E-01	4.323E+01	-1.321E+01		
33	T	-3.436E-01	-5.842E+01	1.783E+01		
33	M	3.922E-02	-1.022E+01	3.050E-01	2.044E+00	1.395E+01
33	B	4.221E-01	3.798E+01	-1.722E+01		
34	T	-2.629E+00	-4.941E+01	2.074E+01		
34	M	-4.391E-02	-8.621E+00	7.465E-01	1.778E+00	1.050E+01
34	B	2.542E+00	3.217E+01	-1.925E+01		
35	T	-6.041E+00	-4.032E+01	2.183E+01		
35	M	-2.113E-01	-7.050E+00	1.059E+00	1.234E+00	6.790E+00
35	B	5.619E+00	2.622E+01	-1.971E+01		
36	T	-1.156E+01	-2.957E+01	2.060E+01		
36	M	-5.323E-01	-5.127E+00	1.321E+00	3.539E-01	2.407E+00
36	B	1.049E+01	1.932E+01	-1.796E+01		
37	T	-1.844E+01	-1.868E+01	1.679E+01		
37	M	-1.048E+00	-3.006E+00	1.526E+00	-7.147E-01	-1.327E+00
37	B	1.634E+01	1.267E+01	-1.374E+01		
38	T	-2.639E+01	-9.260E+00	1.408E+01		
38	M	-1.818E+00	-1.174E+00	1.916E+00	-2.050E+00	-1.313E+00
38	B	2.275E+01	6.911E+00	-1.025E+01		
39	T	-3.060E+01	-8.105E+00	-1.456E+01		
39	M	-3.791E+00	-1.715E+00	-3.301E+00	4.509E+00	-1.420E+00
39	B	2.302E+01	4.676E+00	7.958E+00		
40	T	-1.969E+01	-1.354E+01	-1.865E+01		
40	M	-3.162E+00	-3.922E+00	-2.759E+00	2.507E+00	-1.422E+00
40	B	1.336E+01	5.694E+00	1.313E+01		

========== I M A G E S 3 D ==========
= Copyright (c) 1984 Celestial Software Inc. =
==========
COMBINE RESULTS Version 2.0 07/01/90

Combined Plate Stresses

Plate		Sigma-X	Sigma-Y	Tau-XY	Tau-XZ	Tau-YZ
41	T	-1.160E+01	-1.971E+01	-2.265E+01		
41	M	-2.815E+00	-6.019E+00	-2.547E+00	1.039E+00	1.759E+00
41	B	5.971E+00	7.669E+00	1.756E+01		
42	T	-5.952E+00	-2.647E+01	-2.409E+01		
42	M	-2.826E+00	-7.825E+00	-2.526E+00	-7.767E-02	5.177E+00
42	B	2.996E-01	1.082E+01	1.904E+01		
43	T	-2.435E+00	-3.322E+01	-2.324E+01		
43	M	-3.113E+00	-9.374E+00	-2.639E+00	-8.036E-01	8.268E+00
43	B	-3.791E+00	1.447E+01	1.796E+01		
44	T	-6.784E-01	-3.945E+01	-2.090E+01		
44	M	-3.632E+00	-1.075E+01	-3.003E+00	-1.116E+00	1.086E+01
44	B	-6.586E+00	1.794E+01	1.489E+01		
45	T	-1.633E-01	-4.492E+01	-1.799E+01		
45	M	-4.335E+00	-1.227E+01	-3.915E+00	-1.005E+00	1.286E+01
45	B	-8.508E+00	2.038E+01	1.016E+01		
46	T	1.849E-01	-4.927E+01	-1.564E+01		
46	M	-4.809E+00	-1.404E+01	-5.751E+00	-4.337E-01	1.429E+01
46	B	-9.804E+00	2.118E+01	4.140E+00		
47	T	2.571E+00	-5.522E+01	-1.437E+01		
47	M	-3.818E+00	-1.947E+01	-8.557E+00	5.525E-01	1.560E+01
47	B	-1.021E+01	1.628E+01	-2.738E+00		
48	T	1.169E+01	-5.605E+01	-6.284E+00		
48	M	3.102E+00	-2.187E+01	-4.223E+00	1.369E+00	1.726E+01
48	B	-5.491E+00	1.231E+01	-2.163E+00		
49	T	9.067E+00	-5.201E+01	1.287E-01		
49	M	2.372E-01	-1.847E+01	-1.401E+00	3.845E-01	1.792E+01
49	B	-8.592E+00	1.508E+01	-2.930E+00		
50	T	1.450E+01	-4.824E+01	6.948E+00		
50	M	1.889E+00	-1.415E+01	-9.287E-01	1.120E-01	1.663E+01
50	B	-1.072E+01	1.995E+01	-8.805E+00		
51	T	1.258E+01	-4.507E+01	1.590E+01		
51	M	1.668E+00	-1.185E+01	-3.774E-01	1.267E-01	1.434E+01
51	B	-9.249E+00	2.138E+01	-1.666E+01		
52	T	9.109E+00	-4.004E+01	2.262E+01		
52	M	1.341E+00	-1.010E+01	4.129E-01	-5.932E-01	1.166E+01
52	B	-6.428E+00	1.984E+01	-2.179E+01		
53	T	3.745E+00	-3.486E+01	2.677E+01		
53	M	9.686E-01	-8.364E+00	9.324E-01	-1.694E+00	8.659E+00
53	B	-1.808E+00	1.813E+01	-2.491E+01		
54	T	-3.660E+00	-2.939E+01	2.865E+01		
54	M	5.934E-01	-6.700E+00	1.346E+00	-2.947E+00	5.207E+00
54	B	4.847E+00	1.599E+01	-2.596E+01		

========== I M A G E S 3 D ==========
= Copyright (c) 1984 Celestial Software Inc. =
==========
COMBINE RESULTS Version 2.0 07/01/90

Combined Plate Stresses

Plate		Sigma-X	Sigma-Y	Tau-XY	Tau-XZ	Tau-YZ
55	T	-1.520E+01	-2.276E+01	2.761E+01		
55	M	4.142E-02	-4.698E+00	1.768E+00	-4.466E+00	9.193E-01
55	B	1.528E+01	1.336E+01	-2.408E+01		
56	T	-2.923E+01	-1.622E+01	2.339E+01		
56	M	-6.570E-01	-2.664E+00	2.236E+00	-5.972E+00	-2.737E+00
56	B	2.791E+01	1.089E+01	-1.892E+01		
57	T	-4.347E+01	-1.055E+01	1.984E+01		
57	M	-1.376E+00	-1.020E+00	2.727E+00	-7.462E+00	-1.986E+00
57	B	4.072E+01	8.514E+00	-1.638E+01		
58	T	-4.395E+01	-9.136E+00	-1.728E+01		
58	M	-4.051E+00	-1.613E+00	-4.051E+00	8.063E+00	-1.986E+00
58	B	3.585E+01	5.911E+00	9.176E+00		
59	T	-2.737E+01	-1.165E+01	-2.188E+01		
59	M	-3.477E+00	-3.559E+00	-3.350E+00	5.844E+00	-2.701E+00
59	B	2.042E+01	4.529E+00	1.518E+01		
60	T	-1.456E+01	-1.468E+01	-2.616E+01		
60	M	-3.125E+00	-5.452E+00	-2.857E+00	4.060E+00	1.970E-01
60	B	8.311E+00	3.778E+00	2.045E+01		
61	T	-5.120E+00	-1.811E+01	-2.743E+01		
61	M	-3.066E+00	-7.120E+00	-2.548E+00	2.566E+00	3.315E+00
61	B	-1.013E+00	3.865E+00	2.233E+01		
62	T	1.232E+00	-2.151E+01	-2.609E+01		
62	M	-3.320E+00	-8.508E+00	-2.410E+00	1.417E+00	6.065E+00
62	B	-7.872E+00	4.493E+00	2.127E+01		
63	T	4.934E+00	-2.456E+01	-2.295E+01		
63	M	-3.917E+00	-9.635E+00	-2.490E+00	6.338E-01	8.316E+00
63	B	-1.277E+01	5.293E+00	1.797E+01		
64	T	6.251E+00	-2.685E+01	-1.886E+01		
64	M	-5.057E+00	-1.039E+01	-2.990E+00	1.674E-01	9.999E+00
64	B	-1.637E+01	6.062E+00	1.288E+01		
65	T	5.022E+00	-2.843E+01	-1.527E+01		
65	M	-7.116E+00	-1.133E+01	-4.421E+00	-1.044E-01	1.105E+01
65	B	-1.925E+01	5.778E+00	6.424E+00		
66	T	7.115E-01	-2.743E+01	-1.494E+01		
66	M	-1.050E+01	-1.059E+01	-8.147E+00	-3.883E-01	1.168E+01
66	B	-2.171E+01	6.249E+00	-1.353E+00		
67	T	-8.678E+00	-3.486E+01	-2.237E+01		
67	M	-1.549E+01	-2.685E+01	-2.043E+01	-1.039E+00	1.502E+01
67	B	-2.229E+01	-1.885E+01	-1.849E+01		
68	T	4.055E+01	-3.224E+01	-8.478E+00		
68	M	1.215E+01	-2.499E+01	-1.472E+00	-1.950E+00	1.599E+01
68	B	-1.626E+01	-1.773E+01	5.533E+00		

Combined Plate Stresses

Plate		Sigma-X	Sigma-Y	Tau-XY	Tau-XZ	Tau-YZ
69	T	2.777E+01	-2.973E+01	9.119E+00		
69	M	4.283E+00	-1.226E+01	-3.648E-01	-7.488E-01	1.339E+01
69	B	-1.921E+01	5.207E+00	-9.848E+00		
70	T	2.462E+01	-2.809E+01	1.745E+01		
70	M	3.366E+00	-1.207E+01	1.462E-01	-1.270E+00	1.229E+01
70	B	-1.789E+01	3.949E+00	-1.716E+01		
71	T	1.940E+01	-2.624E+01	2.536E+01		
71	M	2.456E+00	-9.936E+00	8.132E-01	-3.279E+00	1.061E+01
71	B	-1.449E+01	6.371E+00	-2.373E+01		
72	T	-1.117E+01	-2.390E+01	3.085E+01		
72	M	2.010E+00	-8.206E+00	1.354E+00	-5.612E+00	8.071E+00
72	B	-7.148E+00	7.484E+00	-2.814E+01		
73	T	-7.101E-01	-2.111E+01	3.368E+01		
73	M	1.534E+00	-6.450E+00	1.801E+00	-7.955E+00	4.705E+00
73	B	3.779E+00	8.212E+00	-3.008E+01		
74	T	-1.921E+01	-1.784E+01	3.302E+01		
74	M	1.012E+00	-4.471E+00	2.318E+00	-1.046E+01	1.944E-01
74	B	2.123E+01	8.899E+00	-2.838E+01		
75	T	-4.166E+01	-1.492E+01	2.834E+01		
75	M	3.479E-01	-2.516E+00	2.939E+00	-1.261E+01	-3.721E+00
75	B	4.236E+01	9.892E+00	-2.246E+01		
76	T	-6.446E+01	-1.263E+01	2.416E+01		
76	M	-3.591E-01	-8.850E-01	3.510E+00	-1.439E+01	-2.516E+00
76	B	6.374E+01	1.086E+01	-1.714E+01		
77	T	-5.671E+01	-1.065E+01	-1.909E+01		
77	M	-4.053E+00	-1.562E+00	-4.660E+00	1.126E+01	-2.381E+00
77	B	4.861E+01	7.523E+00	9.770E+00		
78	T	-3.466E+01	-1.134E+01	-2.383E+01		
78	M	-3.512E+00	-3.392E+00	-3.845E+00	8.807E+00	-3.592E+00
78	B	2.763E+01	4.557E+00	1.614E+01		
79	T	-1.736E+01	-1.228E+01	-2.807E+01		
79	M	-3.169E+00	-5.148E+00	-3.146E+00	6.670E+00	-8.937E-01
79	B	1.102E+01	1.981E+00	2.177E+01		
80	T	-4.474E+00	-1.339E+01	-2.903E+01		
80	M	-3.093E+00	-6.682E+00	-2.608E+00	4.788E+00	1.989E+00
80	B	-1.712E+00	2.185E-02	2.381E+01		
81	T	4.461E+00	-1.448E+01	-2.724E+01		
81	M	-3.294E+00	-7.945E+00	-2.232E+00	3.248E+00	4.456E+00
81	B	-1.105E+01	-1.409E+00	2.278E+01		
82	T	1.006E+01	-1.536E+01	-2.350E+01		
82	M	-3.820E+00	-8.866E+00	-2.016E+00	2.067E+00	6.443E+00
82	B	-1.770E+01	-2.376E+00	1.947E+01		

Combined Plate Stresses

Plate		Sigma-X	Sigma-Y	Tau-XY	Tau-XZ	Tau-YZ
83	T	1.267E+01	-1.582E+01	-1.835E+01		
83	M	-4.850E+00	-9.452E+00	-1.913E+00	1.137E+00	7.978E+00
83	B	-2.237E+01	-3.084E+00	1.453E+01		
84	T	1.173E+01	-1.508E+01	-1.247E+01		
84	M	-6.855E+00	-8.982E+00	-1.983E+00	1.961E-01	9.199E+00
84	B	-2.544E+01	-2.881E+00	8.507E+00		
85	T	6.230E+00	-1.450E+01	-4.431E+00		
85	M	-1.027E+01	-9.623E+00	-1.039E+00	-1.092E+00	1.080E+01
85	B	-2.677E+01	-4.746E+00	2.354E+00		
86	T	-4.564E+00	-1.319E+01	1.050E+01		
86	M	-1.657E+01	3.182E+00	-1.134E+00	-2.208E+00	1.370E+01
86	B	-2.857E+01	1.956E+01	-1.277E+01		
87	T	4.779E+01	-1.076E+01	1.956E+01		
87	M	1.269E+01	1.658E+00	1.587E+01	-7.987E-01	1.241E+01
87	B	-2.242E+01	1.408E+01	1.218E+01		
88	T	3.766E+01	-1.707E+01	1.009E+01		
88	M	6.530E+00	-1.521E+01	4.883E-01	-5.379E-02	1.032E+01
88	B	-2.460E+01	-1.336E+01	-9.117E+00		
89	T	3.404E+01	-1.521E+01	1.759E+01		
89	M	3.589E+00	-1.098E+01	1.028E+00	-1.570E+00	1.154E+01
89	B	-2.687E+01	-6.744E+00	-1.553E+01		
90	T	2.941E+01	-1.599E+01	2.595E+01		
90	M	3.236E+00	-9.964E+00	1.186E+00	-5.077E+00	1.107E+01
90	B	-2.294E+01	-3.937E+00	-2.358E+01		
91	T	1.876E+01	-1.540E+01	3.278E+01		
91	M	2.678E+00	-8.023E+00	1.703E+00	-9.041E+00	9.059E+00
91	B	-1.341E+01	-6.478E-01	-2.938E+01		
92	T	2.808E+00	-1.441E+01	3.654E+01		
92	M	2.561E+00	-6.255E+00	2.104E+00	-1.283E+01	5.557E+00
92	B	2.315E+00	1.905E+00	-3.233E+01		
93	T	-2.276E+01	-1.395E+01	3.612E+01		
93	M	2.144E+00	-4.393E+00	2.682E+00	-1.649E+01	3.797E-01
93	B	2.705E+01	5.166E+00	-3.076E+01		
94	T	-5.357E+01	-1.435E+01	3.125E+01		
94	M	1.703E+00	-2.554E+00	3.489E+00	-1.919E+01	-4.166E+00
94	B	5.698E+01	9.245E+00	-2.427E+01		
95	T	-8.498E+01	-1.498E+01	2.694E+01		
95	M	9.214E-01	-8.335E-01	4.269E+00	-2.119E+01	-2.824E+00
95	B	8.682E+01	1.331E+01	-1.840E+01		
96	T	-6.730E+01	-1.226E+01	-2.036E+01		
96	M	-3.920E+00	-1.550E+00	-5.131E+00	1.383E+01	-2.616E+00
96	B	5.946E+01	9.158E+00	1.010E+01		

========== I M A G E S 3 D ==========
= Copyright (c) 1984 Celestial Software Inc. =
==========

COMBINE RESULTS Version 2.0 07/01/90

Combined Plate Stresses

Plate		Sigma-X	Sigma-Y	Tau-XY	Tau-XZ	Tau-YZ
97	T	-4.054E+01	-1.202E+01	-2.498E+01		
97	M	-3.381E+00	-3.359E+00	-4.220E+00	1.115E+01	-4.101E+00
97	B	3.378E+01	5.304E+00	1.654E+01		
98	T	-1.955E+01	-1.166E+01	-2.893E+01		
98	M	-3.066E+00	-5.032E+00	-3.366E+00	8.652E+00	-1.517E+00
98	B	1.341E+01	1.594E+00	2.220E+01		
99	T	-3.942E+00	-1.129E+01	-2.955E+01		
99	M	-2.991E+00	-6.464E+00	-2.671E+00	6.407E+00	1.173E+00
99	B	-2.041E+00	-1.640E+00	2.420E+01		
100	T	7.004E+00	-1.092E+01	-2.744E+01		
100	M	-3.144E+00	-7.625E+00	-2.144E+00	4.555E+00	3.404E+00
100	B	-1.329E+01	-4.328E+00	2.316E+01		
101	T	1.416E+01	-1.053E+01	-2.334E+01		
101	M	-3.525E+00	-8.505E+00	-1.726E+00	3.093E+00	5.186E+00
101	B	-2.121E+01	-6.485E+00	1.988E+01		
102	T	1.820E+01	-9.885E+00	-1.773E+01		
102	M	-4.146E+00	-8.941E+00	-1.384E+00	1.903E+00	6.627E+00
102	B	-2.649E+01	-7.998E+00	1.497E+01		
103	T	1.954E+01	-9.107E+00	-1.069E+01		
103	M	-4.897E+00	-9.104E+00	-7.569E-01	8.731E-01	7.984E+00
103	B	-2.933E+01	-9.101E+00	9.173E+00		
104	T	2.060E+01	-9.172E+00	-3.408E+00		
104	M	-4.487E+00	-7.676E+00	-1.044E+00	2.102E-01	9.556E+00
104	B	-2.958E+01	-6.179E+00	1.320E+00		
105	T	2.777E+01	-4.909E+00	-3.671E-01		
105	M	-2.730E+00	-1.644E+00	-1.507E+00	6.680E-01	1.082E+01
105	B	-3.323E+01	1.622E+00	-2.647E+00		
106	T	2.892E+01	-9.072E-01	8.754E+00		
106	M	-3.410E+00	-1.732E+00	5.628E+00	2.271E+00	9.700E+00
106	B	-3.574E+01	-2.556E+00	2.502E+00		
107	T	4.021E+01	-2.552E+00	1.442E+01		
107	M	4.705E+00	-8.527E+00	5.097E+00	1.427E+00	9.130E+00
107	B	-3.080E+01	-1.450E+01	-4.225E+00		
108	T	4.084E+01	-6.185E+00	1.613E+01		
108	M	3.277E+00	-1.131E+01	6.980E-01	-5.864E-01	1.155E+01
108	B	-3.429E+01	-1.643E+01	-1.473E+01		
109	T	3.736E+01	-7.284E+00	2.514E+01		
109	M	2.823E+00	-9.575E+00	1.405E+00	-5.829E+00	1.289E+01
109	B	-3.172E+01	-1.187E+01	-2.233E+01		
110	T	2.681E+01	-7.871E+00	3.318E+01		
110	M	3.612E+00	-7.883E+00	1.660E+00	-1.182E+01	1.143E+01
110	B	-1.959E+01	-7.895E+00	-2.986E+01		

========== I M A G E S 3 D ==========
= Copyright (c) 1984 Celestial Software Inc. =
==========

COMBINE RESULTS Version 2.0 07/01/90

Combined Plate Stresses

Plate		Sigma-X	Sigma-Y	Tau-XY	Tau-XZ	Tau-YZ
111	T	5.846E+00	-7.806E+00	3.788E+01		
111	M	3.040E+00	-6.105E+00	2.185E+00	-1.746E+01	7.526E+00
111	B	2.345E-01	-4.404E+00	-3.351E+01		
112	T	-2.516E+01	-1.031E+01	3.671E+01		
112	M	3.636E+00	-4.435E+00	2.605E+00	-2.221E+01	1.049E+00
112	B	3.243E+01	1.440E+00	-3.150E+01		
113	T	-6.286E+01	-1.451E+01	3.259E+01		
113	M	3.157E+00	-2.905E+00	4.035E+00	-2.483E+01	-4.428E+00
113	B	6.918E+01	8.703E+00	-2.453E+01		
114	T	-1.022E+02	-1.724E+01	2.867E+01		
114	M	2.137E+00	-8.613E-01	5.025E+00	-2.684E+01	-2.998E+00
114	B	1.064E+02	1.551E+01	-1.862E+01		
115	T	-8.037E+01	-1.465E+01	-2.201E+01		
115	M	-3.592E+00	-1.592E+00	-5.716E+00	1.718E+01	-2.746E+00
115	B	7.319E+01	1.147E+01	1.058E+01		
116	T	-4.736E+01	-1.376E+01	-2.607E+01		
116	M	-3.059E+00	-3.465E+00	-4.636E+00	1.399E+01	-4.343E+00
116	B	4.124E+01	6.829E+00	1.680E+01		
117	T	-2.186E+01	-1.212E+01	-2.937E+01		
117	M	-2.810E+00	-5.034E+00	-3.586E+00	1.081E+01	-1.876E+00
117	B	1.624E+01	2.052E+00	2.220E+01		
118	T	-3.227E+00	-1.034E+01	-2.951E+01		
118	M	-2.791E+00	-6.317E+00	-2.753E+00	8.054E+00	4.950E-01
118	B	-2.356E+00	-2.289E+00	2.400E+01		
119	T	9.939E+00	-8.696E+00	-2.710E+01		
119	M	-2.891E+00	-7.375E+00	-2.108E+00	5.859E+00	2.387E+00
119	B	-1.572E+01	-6.054E+00	2.288E+01		
120	T	1.889E+01	-7.175E+00	-2.276E+01		
120	M	-3.101E+00	-8.169E+00	-1.586E+00	4.125E+00	3.897E+00
120	B	-2.509E+01	-9.164E+00	1.959E+01		
121	T	2.456E+01	-5.660E+00	-1.692E+01		
121	M	-3.352E+00	-8.630E+00	-1.146E+00	2.754E+00	5.150E+00
121	B	-3.127E+01	-1.160E+01	1.463E+01		
122	T	2.805E+01	-4.092E+00	-1.044E+01		
122	M	-3.319E+00	-8.423E+00	-1.045E+00	1.801E+00	6.273E+00
122	B	-3.469E+01	-1.275E+01	8.355E+00		
123	T	3.050E+01	-1.544E+00	-5.130E+00		
123	M	-3.400E+00	-6.566E+00	-1.348E+00	1.493E+00	7.183E+00
123	B	-3.730E+01	-1.159E+01	2.435E+00		
124	T	3.138E+01	1.873E+00	1.731E-01		
124	M	-4.387E+00	-4.023E+00	-1.058E-01	1.799E+00	7.577E+00
124	B	-4.016E+01	-9.918E+00	-3.847E-01		

========== I M A G E S 3 D ==========
= Copyright (c) 1984 Celestial Software Inc. =
==========

COMBINE RESULTS Version 2.0 07/01/90

Combined Plate Stresses

Plate		Sigma-X	Sigma-Y	Tau-XY	Tau-XZ	Tau-YZ
125	T	3.487E+01	5.392E+00	7.633E+00		
125	M	-2.979E+00	-3.699E+00	2.652E+00	2.269E+00	7.152E+00
125	B	-4.083E+01	-1.279E+01	-2.329E+00		
126	T	3.765E+01	7.591E+00	1.359E+01		
126	M	-1.751E+00	-5.941E+00	3.432E+00	2.188E+00	6.833E+00
126	B	-4.115E+01	-1.947E+01	-6.725E+00		
127	T	4.205E+01	8.054E+00	1.454E+01		
127	M	-1.103E+00	-9.135E+00	2.873E-01	3.424E+00	1.138E+01
127	B	-4.426E+01	-2.632E+01	-1.397E+01		
128	T	5.014E+01	8.302E+00	2.094E+01		
128	M	2.996E+00	-9.815E+00	-1.708E-02	-3.152E+00	1.903E+01
128	B	-4.415E+01	-2.793E+01	-2.097E+01		
129	T	3.747E+01	8.690E+00	3.185E+01		
129	M	2.829E+00	-7.467E+00	1.014E+00	-1.834E+01	1.938E+01
129	B	-3.181E+01	-2.362E+01	-2.982E+01		
130	T	1.499E+01	4.525E+00	3.452E+01		
130	M	6.753E+00	-5.817E+00	4.678E-01	-2.765E+01	1.059E+01
130	B	-1.480E+00	-1.616E+01	-3.358E+01		
131	T	-2.668E+01	-6.468E+00	3.626E+01		
131	M	6.359E+00	-5.721E+00	2.911E+00	-2.863E+01	1.093E+00
131	B	3.940E+01	-4.974E+00	-3.044E+01		
132	T	-7.587E+01	-1.575E+01	3.240E+01		
132	M	5.108E+00	-3.677E+00	5.095E+00	-3.174E+01	-4.434E+00
132	B	8.608E+01	8.399E+00	-2.221E+01		
133	T	-1.214E+02	-2.067E+01	3.004E+01		
133	M	3.611E+00	-9.949E-01	6.250E+00	-3.411E+01	-3.176E+00
133	B	1.287E+02	1.868E+01	-1.754E+01		
134	T	-9.398E+01	-1.743E+01	-2.399E+01		
134	M	-3.137E+00	-1.717E+00	-6.381E+00	2.116E+01	-2.592E+00
134	B	8.770E+01	1.399E+01	1.122E+01		
135	T	-5.386E+01	-1.599E+01	-2.701E+01		
135	M	-2.557E+00	-3.720E+00	-4.988E+00	1.694E+01	-3.989E+00
135	B	4.875E+01	8.555E+00	1.704E+01		
136	T	-2.383E+01	-1.313E+01	-2.938E+01		
136	M	-2.544E+00	-5.119E+00	-3.712E+00	1.274E+01	-1.770E+00
136	B	1.874E+01	2.888E+00	2.196E+01		
137	T	-2.456E+00	-1.023E+01	-2.899E+01		
137	M	-2.564E+00	-6.211E+00	-2.839E+00	9.500E+00	7.100E-02
137	B	-2.672E+00	-2.188E+00	2.331E+01		
138	T	1.279E+01	-7.609E+00	-2.637E+01		
138	M	-2.642E+00	-7.169E+00	-2.128E+00	7.004E+00	1.550E+00
138	B	-1.808E+01	-6.729E+00	2.212E+01		

========== I M A G E S 3 D ==========
= Copyright (c) 1984 Celestial Software Inc. =
==========

COMBINE RESULTS Version 2.0 07/01/90

Combined Plate Stresses

Plate		Sigma-X	Sigma-Y	Tau-XY	Tau-XZ	Tau-YZ
139	T	2.343E+01	-5.277E+00	-2.192E+01		
139	M	-2.748E+00	-7.880E+00	-1.564E+00	5.033E+00	2.744E+00
139	B	-2.893E+01	-1.048E+01	1.879E+01		
140	T	3.057E+01	-3.010E+00	-1.610E+01		
140	M	-2.811E+00	-8.193E+00	-1.211E+00	3.516E+00	3.704E+00
140	B	-3.620E+01	-1.338E+01	1.368E+01		
141	T	3.494E+01	-3.264E-01	-9.835E+00		
141	M	-2.979E+00	-7.648E+00	-1.126E+00	2.546E+00	4.449E+00
141	B	-4.090E+01	-1.497E+01	7.582E+00		
142	T	3.704E+01	2.612E+00	-3.936E+00		
142	M	-3.491E+00	-6.458E+00	-7.069E-01	2.149E+00	4.883E+00
142	B	-4.402E+01	-1.553E+01	2.523E+00		
143	T	3.838E+01	5.501E+00	1.465E+00		
143	M	-3.788E+00	-5.271E+00	1.444E-01	2.064E+00	4.978E+00
143	B	-4.596E+01	-1.604E+01	-1.177E+00		
144	T	3.942E+01	8.998E+00	8.785E+00		
144	M	-4.039E+00	-4.683E+00	1.784E+00	2.067E+00	4.683E+00
144	B	-4.750E+01	-1.837E+01	-5.217E+00		
145	T	3.997E+01	1.393E+01	1.664E+01		
145	M	-3.968E+00	-5.102E+00	3.090E+00	2.301E+00	4.484E+00
145	B	-4.791E+01	-2.414E+01	-1.046E+01		
146	T	3.712E+01	2.228E+01	1.843E+01		
146	M	-6.624E+00	-4.650E+00	2.294E+00	4.935E+00	3.309E+00
146	B	-5.037E+01	-3.158E+01	-1.385E+01		
147	T	3.913E+01	4.151E+01	9.884E+00		
147	M	-1.448E+01	-8.986E+00	-8.450E+00	2.151E+01	3.888E+01
147	B	-6.810E+01	-5.948E+01	-2.678E+01		
148	T	8.398E+01	4.117E+01	1.136E+01		
148	M	1.991E+01	-8.614E+00	-6.686E+00	-5.388E+01	4.079E+01
148	B	-4.416E+01	-5.839E+01	-2.473E+01		
149	T	2.190E+01	8.906E+00	3.228E+01		
149	M	1.241E+01	-8.755E+00	2.031E+00	-3.666E+01	3.480E+00
149	B	2.915E+00	-2.642E+01	-2.822E+01		
150	T	-2.821E+01	-1.883E+00	3.351E+01		
150	M	8.592E+00	-6.820E+00	4.561E+00	-3.354E+01	-2.971E-01
150	B	4.539E+01	-1.176E+01	-2.439E+01		
151	T	-6.278E+01	-3.592E+01	4.606E+01		
151	M	9.140E+00	-7.617E+00	1.995E+00	-3.594E+01	8.969E+00
151	B	8.106E+01	2.069E+01	-4.207E+01		
152	T	-1.487E+02	-2.287E+01	3.287E+01		
152	M	5.582E+00	-2.040E+00	8.745E+00	-4.593E+01	-8.366E-01
152	B	1.599E+02	1.879E+01	-1.539E+01		

HNF-2465, Rev.0

========== I M A G E S 3 D ==========
= Copyright (c) 1984 Celestial Software Inc. =
==========

COMBINE RESULTS Version 2.0 07/01/90

Combined Plate Stresses

Plate		Sigma-X	Sigma-Y	Tau-XY	Tau-XZ	Tau-YZ
153	T	-1.085E+02	-1.971E+01	-2.653E+01		
153	M	-2.173E+00	-2.174E+00	-7.163E+00	2.717E+01	-1.250E+00
153	B	1.042E+02	1.537E+01	1.221E+01		
154	T	-5.834E+01	-1.744E+01	-2.816E+01		
154	M	-2.147E+00	-4.310E+00	-4.972E+00	1.927E+01	-2.181E+00
154	B	5.405E+01	8.823E+00	1.822E+01		
155	T	-2.507E+01	-1.432E+01	-2.880E+01		
155	M	-2.273E+00	-5.165E+00	-3.817E+00	1.419E+01	-1.252E+00
155	B	2.053E+01	3.992E+00	2.116E+01		
156	T	-1.736E+00	-1.083E+01	-2.811E+01		
156	M	-2.366E+00	-6.167E+00	-2.893E+00	1.065E+01	-1.223E-01
156	B	-2.997E+00	-1.505E+00	2.233E+01		
157	T	1.532E+01	-7.914E+00	-2.541E+01		
157	M	-2.478E+00	-6.993E+00	-2.162E+00	7.966E+00	9.043E-01
157	B	-2.028E+01	-6.072E+00	2.108E+01		
158	T	2.750E+01	-5.312E+00	-2.094E+01		
158	M	-2.619E+00	-7.581E+00	-1.597E+00	5.753E+00	1.759E+00
158	B	-3.274E+01	-9.851E+00	1.774E+01		
159	T	3.563E+01	-2.785E+00	-1.506E+01		
159	M	-2.798E+00	-7.731E+00	-1.228E+00	4.070E+00	2.355E+00
159	B	-4.123E+01	-1.268E+01	1.261E+01		
160	T	4.054E+01	-3.051E-02	-8.538E+00		
160	M	-3.126E+00	-7.291E+00	-8.939E-01	2.933E+00	2.744E+00
160	B	-4.680E+01	-1.455E+01	6.750E+00		
161	T	4.309E+01	2.633E+00	-2.417E+00		
161	M	-3.515E+00	-6.501E+00	-3.582E-01	2.302E+00	2.903E+00
161	B	-5.012E+01	-1.564E+01	1.700E+00		
162	T	4.436E+01	4.999E+00	3.147E+00		
162	M	-3.879E+00	-5.782E+00	4.198E-01	1.945E+00	2.855E+00
162	B	-5.212E+01	-1.656E+01	-2.307E+00		
163	T	4.521E+01	8.142E+00	1.079E+01		
163	M	-4.110E+00	-5.281E+00	1.753E+00	1.610E+00	2.496E+00
163	B	-5.343E+01	-1.870E+01	-7.286E+00		
164	T	4.484E+01	1.250E+01	2.005E+01		
164	M	-4.526E+00	-5.216E+00	3.364E+00	1.556E+00	1.474E+00
164	B	-5.389E+01	-2.293E+01	-1.332E+01		
165	T	4.154E+01	2.074E+01	3.114E+01		
165	M	-6.311E+00	-4.870E+00	5.310E+00	2.819E+00	-9.683E-02
165	B	-5.416E+01	-3.048E+01	-2.052E+01		
166	T	3.974E+01	2.077E+01	5.116E+01		
166	M	-1.362E+01	-5.513E+00	1.229E+01	1.603E+01	-2.547E+01
166	B	-6.698E+01	-3.180E+01	-2.659E+01		

========== I M A G E S 3 D ==========
= Copyright (c) 1984 Celestial Software Inc. =
==========

COMBINE RESULTS Version 2.0 07/01/90

Combined Plate Stresses

Plate		Sigma-X	Sigma-Y	Tau-XY	Tau-XZ	Tau-YZ
167	T	7.738E+01	1.995E+01	3.590E+01		
167	M	1.773E+01	-4.868E+00	1.494E+01	-4.912E+01	-2.843E+01
167	B	-4.191E+01	-2.969E+01	-6.031E+00		
168	T	1.867E+01	8.351E+00	2.891E+01		
168	M	1.093E+01	-8.285E+00	7.966E+00	-3.507E+01	-4.910E+00
168	B	3.194E+00	-2.492E+01	-1.298E+01		
169	T	-3.216E+01	-7.278E+00	2.927E+01		
169	M	7.974E+00	-6.530E+00	6.601E+00	-3.433E+01	-1.695E+00
169	B	4.811E+01	-5.783E+00	-1.607E+01		
170	T	-6.268E+01	-4.424E+01	4.540E+01		
170	M	9.264E+00	-8.245E+00	2.608E+00	-3.657E+01	1.252E+01
170	B	8.121E+01	2.775E+01	-4.018E+01		
171	T	-1.561E+02	-4.029E+01	4.655E+01		
171	M	5.997E+00	-6.832E+00	8.878E+00	-4.638E+01	1.294E+01
171	B	1.681E+02	2.662E+01	-2.879E+01		
172	T	-1.165E+02	-3.258E+01	-4.035E+01		
172	M	-8.496E-01	-6.177E+00	-7.146E+00	2.611E+01	8.395E+00
172	B	1.148E+02	2.022E+01	2.606E+01		
173	T	-7.309E+01	-2.007E+01	-2.994E+01		
173	M	-1.480E+00	-4.335E+00	-5.524E+00	2.120E+01	1.542E+00
173	B	7.013E+01	1.140E+01	1.889E+01		
174	T	-3.148E+01	-1.532E+01	-2.825E+01		
174	M	-1.783E+00	-5.260E+00	-4.020E+00	1.646E+01	-5.483E-01
174	B	2.792E+01	4.797E+00	2.021E+01		
175	T	-1.586E+00	-1.195E+01	-2.689E+01		
175	M	-2.131E+00	-6.026E+00	-2.934E+00	1.243E+01	-3.411E-01
175	B	-2.676E+00	-1.066E-01	2.102E+01		
176	T	1.863E+01	-9.316E+00	-2.398E+01		
176	M	-2.413E+00	-6.813E+00	-2.112E+00	9.249E+00	3.539E-01
176	B	-2.346E+01	-4.310E+00	1.975E+01		
177	T	3.191E+01	-6.998E+00	-1.927E+01		
177	M	-2.709E+00	-7.210E+00	-1.547E+00	6.815E+00	7.544E-01
177	B	-3.733E+01	-7.423E+00	1.618E+01		
178	T	4.096E+01	-4.766E+00	-1.341E+01		
178	M	-3.028E+00	-7.282E+00	-1.105E+00	4.795E+00	9.233E-01
178	B	-4.702E+01	-9.798E+00	1.120E+01		
179	T	4.657E+01	-2.521E+00	-6.927E+00		
179	M	-3.390E+00	-6.991E+00	-6.358E-01	3.246E+00	9.565E-01
179	B	-5.335E+01	-1.146E+01	5.655E+00		
180	T	4.957E+01	-5.680E-01	-8.943E-01		
180	M	-3.720E+00	-6.554E+00	-5.616E-02	2.193E+00	8.775E-01
180	B	-5.702E+01	-1.254E+01	7.819E-01		

IMAGES 3D
= Copyright (c) 1984 Celestial Software Inc. =

COMBINE RESULTS Version 2.0 07/01/90

Combined Plate Stresses

Plate		Sigma-X	Sigma-Y	Tau-XY	Tau-XZ	Tau-YZ
181	T	5.116E+01	1.061E+00	4.535E+00		
181	M	-3.939E+00	-6.168E+00	6.210E-01	1.433E+00	7.123E-01
181	B	-5.904E+01	-1.340E+01	-3.293E+00		
182	T	5.210E+01	3.065E+00	1.214E+01		
182	M	-4.056E+00	-5.899E+00	1.769E+00	5.057E-01	2.241E-01
182	B	-6.021E+01	-1.486E+01	-8.598E+00		
183	T	5.212E+01	5.406E+00	2.219E+01		
183	M	-4.023E+00	-5.851E+00	3.480E+00	-6.012E-01	-9.188E-01
183	B	-6.016E+01	-1.711E+01	-1.523E+01		
184	T	5.258E+01	3.711E+00	3.253E+01		
184	M	-3.107E+00	-7.112E+00	5.794E+00	-1.766E+00	-5.310E+00
184	B	-5.879E+01	-1.793E+01	-2.094E+01		
185	T	5.609E+01	-1.638E+00	3.214E+01		
185	M	1.872E+00	-6.738E+00	5.190E+00	-1.120E+01	-7.994E+00
185	B	-5.234E+01	-1.184E+01	-2.176E+01		
186	T	3.433E+01	-2.243E+00	2.449E+01		
186	M	-6.233E-01	-4.684E+00	5.756E+00	-1.593E+01	-9.107E+00
186	B	-3.557E+01	-7.125E+00	-1.298E+01		
187	T	1.039E+01	-1.549E+00	2.594E+01		
187	M	4.442E+00	-4.134E+00	8.438E+00	-2.719E+01	-7.693E+00
187	B	-1.506E+00	-6.719E+00	-9.060E+00		
188	T	-3.246E+01	-9.708E+00	2.703E+01		
188	M	5.331E+00	-5.539E+00	7.609E+00	-3.056E+01	-1.894E+00
188	B	4.313E+01	-1.371E+00	-1.181E+01		
189	T	-8.394E+01	-2.027E+01	3.241E+01		
189	M	5.047E+00	-5.312E+00	7.678E+00	-3.256E+01	4.703E+00
189	B	9.403E+01	9.648E+00	-1.705E+01		
190	T	-1.386E+02	-3.689E+01	4.331E+01		
190	M	5.480E+00	-7.060E+00	8.001E+00	-3.225E+01	1.155E+01
190	B	1.496E+02	2.277E+01	-2.731E+01		
191	T	-1.059E+02	-2.872E+01	-3.238E+01		
191	M	9.945E-01	-6.090E+00	-6.297E+00	1.713E+01	8.217E+00
191	B	1.079E+02	1.654E+01	1.978E+01		
192	T	-8.065E+01	-1.998E+01	-2.995E+01		
192	M	-6.985E-01	-5.258E+00	-5.739E+00	2.184E+01	7.354E+00
192	B	7.925E+01	9.467E+00	1.847E+01		
193	T	-3.595E+01	-1.348E+01	-2.623E+01		
193	M	-1.410E+00	-5.155E+00	-3.970E+00	1.888E+01	5.164E+00
193	B	3.313E+01	3.171E+00	1.829E+01		
194	T	-9.007E-01	-1.039E+01	-2.425E+01		
194	M	-1.979E+00	-6.054E+00	-2.803E+00	1.472E+01	4.892E+00
194	B	-3.057E+00	-1.715E+00	1.864E+01		

IMAGES 3D
= Copyright (c) 1984 Celestial Software Inc. =

COMBINE RESULTS Version 2.0 07/01/90

Combined Plate Stresses

Plate		Sigma-X	Sigma-Y	Tau-XY	Tau-XZ	Tau-YZ
195	T	2.154E+01	-8.148E+00	-2.090E+01		
195	M	-2.504E+00	-6.621E+00	-1.947E+00	1.132E+01	5.111E+00
195	B	-2.655E+01	-5.093E+00	1.701E+01		
196	T	3.524E+01	-6.507E+00	-1.668E+01		
196	M	-2.949E+00	-6.924E+00	-1.406E+00	8.573E+00	5.281E+00
196	B	-4.113E+01	-7.341E+00	1.387E+01		
197	T	4.475E+01	-4.830E+00	-1.134E+01		
197	M	-3.365E+00	-6.965E+00	-9.456E-01	5.923E+00	5.242E+00
197	B	-5.148E+01	-9.099E+00	9.450E+00		
198	T	5.074E+01	-3.308E+00	-5.553E+00		
198	M	-3.736E+00	-6.789E+00	-4.608E-01	3.620E+00	5.050E+00
198	B	-5.821E+01	-1.027E+01	4.631E+00		
199	T	5.403E+01	-2.061E+00	-2.802E-01		
199	M	-3.989E+00	-6.541E+00	7.452E-02	1.880E+00	4.848E+00
199	B	-6.201E+01	-1.102E+01	4.292E-01		
200	T	5.583E+01	-1.120E+00	4.392E+00		
200	M	-4.109E+00	-6.355E+00	6.502E-01	4.456E-01	4.643E+00
200	B	-6.404E+01	-1.159E+01	-3.091E+00		
201	T	5.710E+01	-1.528E-01	1.091E+01		
201	M	-3.998E+00	-6.238E+00	1.573E+00	-1.458E+00	4.186E+00
201	B	-6.509E+01	-1.232E+01	-7.763E+00		
202	T	5.806E+01	-2.147E-01	1.935E+01		
202	M	-3.324E+00	-6.623E+00	3.007E+00	-3.961E+00	2.976E+00
202	B	-6.471E+01	-1.303E+01	-1.332E+01		
203	T	5.768E+01	-2.376E+00	2.465E+01		
203	M	-1.398E+00	-6.774E+00	3.506E+00	-8.015E+00	1.563E+00
203	B	-6.047E+01	-1.117E+01	-1.764E+01		
204	T	4.857E+01	-4.792E+00	2.533E+01		
204	M	-8.230E-01	-6.260E+00	4.108E+00	-1.282E+01	4.672E-01
204	B	-5.021E+01	-7.727E+00	-1.711E+01		
205	T	3.310E+01	-6.495E+00	2.458E+01		
205	M	1.378E+00	-5.504E+00	4.908E+00	-1.814E+01	5.533E-01
205	B	-3.034E+01	-4.513E+00	-1.476E+01		
206	T	6.267E+00	-8.059E+00	2.327E+01		
206	M	1.440E+00	-4.927E+00	5.510E+00	-2.200E+01	1.547E+00
206	B	-3.387E+00	-1.794E+00	-1.225E+01		
207	T	-3.125E+01	-1.050E+01	2.491E+01		
207	M	3.181E+00	-4.628E+00	6.936E+00	-2.640E+01	3.588E+00
207	B	3.761E+01	1.247E+00	-1.104E+01		
208	T	-8.261E+01	-1.802E+01	2.943E+01		
208	M	4.246E+00	-5.240E+00	7.457E+00	-2.808E+01	7.910E+00
208	B	9.111E+01	7.539E+00	-1.452E+01		

========== I M A G E S 3 D ==========
= Copyright (c) 1984 Celestial Software Inc. =
==========

COMBINE RESULTS Version 2.0 07/01/90

Combined Plate Stresses

Plate		Sigma-X	Sigma-Y	Tau-XY	Tau-XZ	Tau-YZ
209	T	-1.232E+02	-3.078E+01	3.477E+01		
209	M	5.028E+00	-6.557E+00	7.285E+00	-2.145E+01	1.000E+01
209	B	1.333E+02	1.766E+01	-2.019E+01		
210	T	-1.051E+02	-2.003E+01	-2.800E+01		
210	M	3.498E+00	6.966E-02	-7.799E+00	2.120E+01	3.586E+00
210	B	1.121E+02	2.017E+01	1.241E+01		
211	T	-6.851E+01	-1.267E+01	-3.739E+01		
211	M	1.781E+00	8.421E-01	-7.193E+00	2.144E+01	6.683E+00
211	B	7.207E+01	1.435E+01	2.301E+01		
212	T	-2.931E+01	-2.728E+00	-3.651E+01		
212	M	9.509E-02	5.393E-01	-5.301E+00	1.887E+01	7.069E+00
212	B	2.950E+01	3.807E+00	2.591E+01		
213	T	2.783E+00	2.745E+00	-3.286E+01		
213	M	-1.282E+00	-3.068E-01	-3.491E+00	1.488E+01	6.589E+00
213	B	-5.346E+00	-3.359E+00	2.588E+01		
214	T	2.386E+01	6.478E+00	-2.817E+01		
214	M	-2.392E+00	-8.955E-01	-2.393E+00	1.149E+01	6.651E+00
214	B	-2.865E+01	-8.269E+00	2.338E+01		
215	T	3.709E+01	9.252E+00	-2.225E+01		
215	M	-3.184E+00	-1.173E+00	-1.676E+00	8.693E+00	6.787E+00
215	B	-4.346E+01	-1.160E+01	1.890E+01		
216	T	4.628E+01	1.157E+01	-1.494E+01		
216	M	-3.828E+00	-1.216E+00	-1.078E+00	5.940E+00	6.809E+00
216	B	-5.394E+01	-1.400E+01	1.278E+01		
217	T	5.214E+01	1.345E+01	-6.945E+00		
217	M	-4.293E+00	-1.070E+00	-4.624E-01	3.573E+00	6.724E+00
217	B	-6.073E+01	-1.559E+01	6.020E+00		
218	T	5.548E+01	1.483E+01	3.255E-01		
218	M	-4.534E+00	-8.824E-01	1.714E-01	1.818E+00	6.567E+00
218	B	-6.454E+01	-1.659E+01	1.728E-02		
219	T	5.737E+01	1.575E+01	6.688E+00		
219	M	-4.568E+00	-7.466E-01	8.072E-01	2.786E-01	6.335E+00
219	B	-6.650E+01	-1.725E+01	-5.073E+00		
220	T	5.864E+01	1.611E+01	1.515E+01		
220	M	-4.230E+00	-7.886E-01	1.785E+00	-1.865E+00	5.757E+00
220	B	-6.709E+01	-1.769E+01	-1.158E+01		
221	T	5.899E+01	1.496E+01	2.457E+01		
221	M	-3.085E+00	-1.010E+00	2.860E+00	-4.995E+00	4.713E+00
221	B	-6.516E+01	-1.698E+01	-1.885E+01		
222	T	5.519E+01	1.170E+01	3.060E+01		
222	M	-1.620E+00	-1.040E+00	3.645E+00	-9.025E+00	3.677E+00
222	B	-5.843E+01	-1.378E+01	-2.331E+01		

========== I M A G E S 3 D ==========
= Copyright (c) 1984 Celestial Software Inc. =
==========

COMBINE RESULTS Version 2.0 07/01/90

Combined Plate Stresses

Plate		Sigma-X	Sigma-Y	Tau-XY	Tau-XZ	Tau-YZ
223	T	4.544E+01	8.144E+00	3.241E+01		
223	M	1.124E-01	-5.151E-01	4.364E+00	-1.337E+01	3.129E+00
223	B	-4.521E+01	-9.174E+00	-2.368E+01		
224	T	2.926E+01	5.353E+00	3.234E+01		
224	M	1.240E+00	1.671E-01	5.306E+00	-1.728E+01	3.296E+00
224	B	-2.679E+01	-5.018E+00	-2.173E+01		
225	T	8.002E+00	2.775E+00	3.235E+01		
225	M	2.860E+00	7.690E-01	6.510E+00	-2.074E+01	4.206E+00
225	B	-2.282E+00	-1.237E+00	-1.933E+01		
226	T	-2.453E+01	-1.222E+00	3.400E+01		
226	M	4.469E+00	1.163E+00	8.107E+00	-2.417E+01	6.148E+00
226	B	3.347E+01	3.548E+00	-1.778E+01		
227	T	-6.663E+01	-1.123E+01	3.740E+01		
227	M	6.349E+00	1.145E+00	9.534E+00	-2.604E+01	7.774E+00
227	B	7.933E+01	1.351E+01	-1.833E+01		
228	T	-1.144E+02	-2.112E+01	2.985E+01		
228	M	7.937E+00	4.028E-01	9.735E+00	-2.391E+01	4.770E+00
228	B	1.302E+02	2.192E+01	-1.038E+01		
229	T	-1.228E+02	-1.472E+01	-2.058E+01		
229	M	6.104E+00	4.989E-01	-6.676E+00	2.234E+01	-4.931E-01
229	B	1.350E+02	1.572E+01	7.227E+00		
230	T	-6.842E+01	-1.280E+00	-2.521E+01		
230	M	4.074E+00	6.054E-01	-5.736E+00	1.538E+01	-1.805E+00
230	B	7.657E+01	2.491E+00	1.374E+01		
231	T	-2.656E+01	3.554E+00	-2.684E+01		
231	M	9.862E-01	-1.009E-01	-3.817E+00	1.195E+01	-1.450E+00
231	B	2.854E+01	-3.755E+00	1.921E+01		
232	T	5.646E+00	6.914E+00	-2.460E+01		
232	M	-1.482E+00	-4.633E-01	-2.425E+00	9.224E+00	-1.856E+00
232	B	-8.609E+00	-7.841E+00	1.975E+01		
233	T	2.805E+01	9.164E+00	-2.114E+01		
233	M	-3.093E+00	-7.357E-01	-1.592E+00	6.900E+00	-2.087E+00
233	B	-3.423E+01	-1.064E+01	1.796E+01		
234	T	4.248E+01	1.076E+01	-1.670E+01		
234	M	-4.149E+00	-8.608E-01	-1.095E+00	5.110E+00	-2.161E+00
234	B	-5.078E+01	-1.249E+01	1.451E+01		
235	T	5.271E+01	1.206E+01	-1.109E+01		
235	M	-4.908E+00	-8.782E-01	-6.853E-01	3.512E+00	-2.160E+00
235	B	-6.253E+01	-1.382E+01	9.720E+00		
236	T	5.938E+01	1.301E+01	-4.859E+00		
236	M	-5.376E+00	-8.218E-01	-2.725E-01	2.249E+00	-2.118E+00
236	B	-7.013E+01	-1.466E+01	4.314E+00		

========== I M A G E S 3 D ==========
= Copyright (c) 1984 Celestial Software Inc. =
==========
COMBINE RESULTS Version 2.0 07/01/90

Combined Plate Stresses

Plate		Sigma-X	Sigma-Y	Tau-XY	Tau-XZ	Tau-YZ
237	T	6.323E+01	1.359E+01	8.327E-01		
237	M	-5.553E+00	-7.545E-01	1.345E-01	1.364E+00	-2.154E+00
237	B	-7.433E+01	-1.510E+01	-5.636E-01		
238	T	6.531E+01	1.383E+01	5.700E+00		
238	M	-5.509E+00	-7.323E-01	5.241E-01	5.903E-01	-2.289E+00
238	B	-7.632E+01	-1.529E+01	-4.652E+00		
239	T	6.609E+01	1.352E+01	1.177E+01		
239	M	-5.072E+00	-7.689E-01	1.025E+00	-6.343E-01	-2.562E+00
239	B	-7.623E+01	-1.506E+01	-9.720E+00		
240	T	6.438E+01	1.230E+01	1.807E+01		
240	M	-4.150E+00	-8.472E-01	1.586E+00	-2.661E+00	-2.945E+00
240	B	-7.268E+01	-1.400E+01	-1.490E+01		
241	T	5.710E+01	1.024E+01	2.190E+01		
241	M	-2.766E+00	-7.941E-01	2.056E+00	-5.348E+00	-3.223E+00
241	B	-6.263E+01	-1.183E+01	-1.779E+01		
242	T	4.406E+01	8.202E+00	2.332E+01		
242	M	-1.324E+00	-5.574E-01	2.615E+00	-8.242E+00	-3.248E+00
242	B	-4.671E+01	-9.317E+00	-1.809E+01		
243	T	2.730E+01	6.719E+00	2.349E+01		
243	M	1.955E-01	-2.525E-01	3.313E+00	-1.079E+01	-2.976E+00
243	B	-2.691E+01	-7.225E+00	-1.687E+01		
244	T	6.455E+00	5.395E+00	2.354E+01		
244	M	1.774E+00	1.248E-02	4.198E+00	-1.307E+01	-2.384E+00
244	B	-2.908E+00	-5.370E+00	-1.514E+01		
245	T	-2.285E+01	3.290E+00	2.426E+01		
245	M	4.184E+00	1.602E-01	5.491E+00	-1.522E+01	-1.416E+00
245	B	3.122E+01	-2.970E+00	-1.328E+01		
246	T	-6.307E+01	5.684E-01	2.378E+01		
246	M	7.483E+00	8.924E-01	7.404E+00	-1.740E+01	-1.150E+00
246	B	7.803E+01	1.217E+00	-8.970E+00		
247	T	-1.275E+02	-1.431E+01	2.110E+01		
247	M	9.904E+00	8.779E-01	8.451E+00	-2.361E+01	1.941E-02
247	B	1.473E+02	1.607E+01	-4.200E+00		
248	T	-1.181E+02	-1.150E+01	-1.047E+01		
248	M	1.322E+01	8.826E-01	-4.343E+00	2.307E+01	1.201E+00
248	B	1.445E+02	1.327E+01	1.783E+00		
249	T	-6.913E+01	7.390E-02	-1.528E+01		
249	M	5.909E+00	5.087E-02	-2.368E+00	2.257E+01	6.609E-02
249	B	8.095E+01	2.784E-02	1.055E+01		
250	T	-2.746E+01	8.082E-01	-1.589E+01		
250	M	7.976E-01	-1.676E-01	-1.431E+00	2.019E+01	-9.503E-01
250	B	2.906E+01	-1.143E+00	1.303E+01		

========== I M A G E S 3 D ==========
= Copyright (c) 1984 Celestial Software Inc. =
==========
COMBINE RESULTS Version 2.0 07/01/90

Combined Plate Stresses

Plate		Sigma-X	Sigma-Y	Tau-XY	Tau-XZ	Tau-YZ
251	T	4.877E+00	2.016E+00	-1.493E+01		
251	M	-2.460E+00	-2.529E-01	-8.762E-01	1.710E+01	-1.218E+00
251	B	-9.797E+00	-2.522E+00	1.317E+01		
252	T	2.761E+01	2.677E+00	-1.285E+01		
252	M	-4.430E+00	-3.096E-01	-5.565E-01	1.383E+01	-1.466E+00
252	B	-3.647E+01	-3.297E+00	1.174E+01		
253	T	4.255E+01	3.107E+00	-1.012E+01		
253	M	-5.628E+00	-3.306E-01	-3.818E-01	1.058E+01	-1.623E+00
253	B	-5.381E+01	-3.768E+00	9.355E+00		
254	T	5.327E+01	3.518E+00	-6.720E+00		
254	M	-6.475E+00	-3.363E-01	-2.428E-01	7.188E+00	-1.713E+00
254	B	-6.622E+01	-4.191E+00	6.235E+00		
255	T	6.035E+01	3.819E+00	-2.964E+00		
255	M	-6.984E+00	-3.232E-01	-9.906E-02	3.906E+00	-1.779E+00
255	B	-7.431E+01	-4.465E+00	2.766E+00		
256	T	6.437E+01	3.958E+00	4.130E-01		
256	M	-7.167E+00	-3.106E-01	4.308E-02	1.151E+00	-1.826E+00
256	B	-7.871E+01	-4.580E+00	-3.269E-01		
257	T	6.643E+01	3.977E+00	3.255E+00		
257	M	-7.113E+00	-3.092E-01	1.673E-01	-1.160E+00	-1.860E+00
257	B	-8.065E+01	-4.596E+00	-2.920E+00		
258	T	6.682E+01	3.819E+00	6.768E+00		
258	M	-6.731E+00	-3.211E-01	3.306E-01	-4.270E+00	-1.879E+00
258	B	-8.028E+01	-4.461E+00	-6.107E+00		
259	T	6.398E+01	3.409E+00	1.038E+01		
259	M	-5.924E+00	-3.354E-01	4.885E-01	-8.224E+00	-1.860E+00
259	B	-7.583E+01	-4.079E+00	-9.401E+00		
260	T	5.502E+01	2.723E+00	1.270E+01		
260	M	-4.780E+00	-3.167E-01	6.385E-01	-1.213E+01	-1.775E+00
260	B	-6.458E+01	-3.356E+00	-1.142E+01		
261	T	4.073E+01	2.076E+00	1.380E+01		
261	M	-3.422E+00	-2.566E-01	8.367E-01	-1.553E+01	-1.631E+00
261	B	-4.757E+01	-2.590E+00	-1.213E+01		
262	T	2.349E+01	1.674E+00	1.420E+01		
262	M	-1.963E+00	-1.875E-01	1.111E+00	-1.812E+01	-1.433E+00
262	B	-2.742E+01	-2.049E+00	-1.198E+01		
263	T	3.195E+00	1.405E+00	1.443E+01		
263	M	-1.369E-01	-1.469E-01	1.468E+00	-2.021E+01	-1.171E+00
263	B	-3.469E+00	-1.698E+00	-1.149E+01		
264	T	-2.518E+01	6.660E-01	1.426E+01		
264	M	2.748E+00	-1.187E-01	1.973E+00	-2.219E+01	-9.293E-01
264	B	3.067E+01	-9.034E-01	-1.032E+01		

========== I M A G E S 3 D ==========
= Copyright (c) 1984 Celestial Software Inc. =
==========

COMBINE RESULTS Version 2.0 07/01/90

Combined Plate Stresses

Plate		Sigma-X	Sigma-Y	Tau-XY	Tau-XZ	Tau-YZ
265	T	-6.435E+01	1.572E+00	1.459E+01		
265	M	7.562E+00	-6.007E-03	2.734E+00	-2.386E+01	1.339E-01
265	B	7.947E+01	-1.584E+00	-9.118E+00		
266	T	-1.210E+02	-1.102E+01	1.063E+01		
266	M	1.698E+01	1.113E+00	5.302E+00	-2.381E+01	1.296E+00
266	B	1.550E+02	1.324E+01	-3.094E-02		

Attachment 3.

Determination of the extreme values of the stress

in the east wall of the Pump Pit 241-06A

Total 30 pages.

KAISER ENGINEERS HANFORD S/N:801854 08/29/95
PAGE 120 Run ID=BO65974 10:34:50
========== I M A G E S 3 D ==========
= Copyright (c) 1984 Celestial Software Inc. =
==========
COMBINE RESULTS Version 2.0 07/01/90

Combined Plate Stresses

Load Combination Method
1.4*F[1,1]+1.7*F[1,2]+1.7*F[1,3]+1.7*F[1,5]

Plate	Sigma-X	Sigma-Y	Tau-XY	Tau-XZ	Tau-YZ
1 T	-9.3890	-10.8500	-7.4440		
1 M	-2.3680	-3.1800	-2.0160	0.5918	0.8627
1 B	4.6530	4.4890	3.4120		
2 T	-7.8830	-27.5500	-12.3200		
2 M	-2.1540	-7.5020	-2.9440	-0.6746	3.9480
2 B	3.5740	12.5500	6.4330		
3 T	-8.5160	-43.6600	-15.5200		
3 M	-2.3610	-10.3100	-3.7380	-1.3360	8.5170
3 B	3.7930	23.0300	8.0420		
4 T	-9.9910	-61.2100	-16.9900		
4 M	-2.6920	-12.7300	-4.4690	-1.7240	13.0300
4 B	4.6070	35.7400	8.0480		
5 T	-11.9900	-78.8600	-17.3600		
5 M	-3.1020	-15.0700	-5.2730	-1.8570	17.0900
5 B	5.7800	48.7300	6.8120		
6 T	-14.1500	-95.7400	-17.1200		
6 M	-3.5170	-17.6000	-6.1830	-1.7670	20.6000
6 B	7.1180	60.5300	4.7530		
7 T	-15.9600	-111.4000	-16.4200		
7 M	-3.7170	-20.7100	-7.0720	-1.4600	23.6900
7 B	8.5290	70.0200	2.2800		
8 T	-16.5600	-124.3000	-14.5900		
8 M	-3.1770	-23.6500	-7.0920	-0.9898	26.3800
8 B	10.2000	76.9500	0.4097		
9 T	-16.8600	-132.4000	-12.0400		
9 M	-2.9470	-25.4100	-6.3850	-0.5605	28.4200
9 B	10.9600	81.6200	-0.7354		
10 T	-15.9200	-136.2000	-8.7540		
10 M	-2.1020	-25.5100	-5.1160	-0.2060	29.8200
10 B	11.7200	85.1900	-1.4780		
11 T	-15.6000	-136.0000	-3.7790		
11 M	-2.1550	-23.6100	-3.4710	0.2189	30.7100
11 B	11.2900	88.7400	-3.1620		
12 T	-14.1400	-129.8000	2.6550		
12 M	-1.7720	-19.9100	-1.9700	0.7531	30.2600
12 B	10.6000	89.9500	-6.5940		
13 T	-12.6400	-117.1000	8.8380		
13 M	-1.5790	-16.0500	-1.0550	1.2770	27.6200
13 B	9.4850	85.0100	-10.9500		
14 T	-10.9400	-101.2000	13.8100		
14 M	-1.1370	-13.0100	-0.4565	1.6290	23.4800
14 B	8.6620	75.2000	-14.7200		
15 T	-9.9430	-85.2100	17.0200		
15 M	-0.8886	-10.8200	0.0822	1.7120	18.8200
15 B	8.1660	63.5700	-16.8600		
16 T	-9.4560	-68.7300	18.5300		
16 M	-0.7414	-8.8320	0.5142	1.5750	13.7000
16 B	7.9740	51.0700	-17.5000		
17 T	-9.5870	-49.1400	17.7900		
17 M	-0.6412	-6.4990	0.8567	1.1800	7.5040
17 B	8.3040	36.1400	-16.0700		
18 T	-10.4700	-30.0100	14.2000		
18 M	-0.6277	-4.0660	1.0040	0.5577	1.9040

18 B	9.2140	21.8800	-12.1900		
19 T	-12.7900	-12.0900	9.3190		
19 M	-0.8142	-1.5580	0.9736	-0.4221	-0.1077
19 B	11.1600	8.9680	-7.3710		
20 T	-22.6400	-8.5090	-12.1300		
20 M	-4.9730	-2.5570	-3.2780	2.9340	-0.4868
20 B	12.6900	3.3950	5.5710		
21 T	-14.2300	-17.8400	-15.6000		
21 M	-3.9310	-5.8960	-3.1070	0.2052	0.9899
21 B	6.3650	6.0520	9.3840		
22 T	-10.1900	-28.4100	-19.4400		
22 M	-3.7150	-8.7950	-3.5810	-1.4240	5.0950
22 B	2.7630	10.8200	12.2700		
23 T	-8.3530	-39.7400	-21.1000		
23 M	-3.9260	-11.1600	-4.1310	-2.4420	9.2110
23 B	0.5007	17.4200	12.8400		
24 T	-8.0710	-51.3800	-21.2400		
24 M	-4.3960	-13.3500	-4.8160	-2.9240	12.9100
24 B	-0.7212	24.6900	11.6100		
25 T	-8.7590	-62.7300	-20.6200		
25 M	-4.9680	-15.7000	-5.7990	-2.9200	16.0900
25 B	-1.1770	31.3200	9.0240		
26 T	-9.3760	-73.4200	-19.8600		
26 M	-5.1830	-18.5600	-7.2590	-2.4110	18.8100
26 B	-0.9894	36.3000	5.3390		
27 T	-8.1550	-83.6100	-18.8800		
27 M	-4.1220	-22.9700	-8.8910	-1.3830	21.2200
27 B	-0.0888	37.6800	1.1020		
28 T	-4.1010	-89.7800	-14.9500		
28 M	-0.9231	-25.9900	-7.5930	-0.3094	23.3200
28 B	2.2550	37.8000	-0.2338		
29 T	-3.2450	-92.4100	-11.3700		
29 M	-0.8974	-26.8500	-6.2400	0.1919	24.9000
29 B	1.4510	38.7100	-1.1080		
30 T	0.9320	-91.1200	-4.5340		
30 M	0.8164	-24.6000	-3.5480	0.6343	25.8600
30 B	0.7008	41.9300	-2.5620		
31 T	2.0730	-85.6000	3.4790		
31 M	0.0537	-19.8000	-1.8370	1.0410	25.3600
31 B	-1.9660	46.0100	-7.1520		
32 T	3.7740	-77.5200	10.9700		
32 M	0.5735	-15.6100	-1.5120	1.6270	22.7700
32 B	-2.6270	46.3100	-14.0000		
33 T	2.8270	-68.1500	18.1800		
33 M	0.8208	-12.8500	-0.7031	1.8320	19.0200
33 B	-1.1860	42.4500	-19.5800		
34 T	0.1336	-58.1400	22.8000		
34 M	0.7809	-10.5800	0.0286	1.4920	14.8400
34 B	1.4280	36.9800	-22.7400		
35 T	-4.2510	-47.7000	25.1400		
35 M	0.6249	-8.4250	0.5686	0.7685	10.1300
35 B	5.5010	30.8500	-24.0000		
36 T	-11.6900	-35.0900	24.6200		
36 M	0.3094	-5.9100	1.0500	-0.4475	4.3190
36 B	12.3100	23.2700	-22.5200		
37 T	-21.2800	-22.2300	20.5800		
37 M	-0.1964	-3.2900	1.4360	-2.0110	-0.8966
37 B	20.8900	15.6500	-17.7100		
38 T	-32.6400	-11.2200	17.4400		
38 M	-0.9373	-1.1560	1.9400	-4.0340	-1.4080
38 B	30.7700	8.9070	-13.5600		
39 T	-34.8800	-8.2650	-15.5700		
39 M	-6.1870	-2.2970	-4.3300	6.5250	-1.2870
39 B	22.5100	3.6700	6.9130		
40 T	-21.5400	-12.5800	-19.5800		
40 M	-5.3140	-4.9560	-3.7300	3.5280	-1.0060
40 B	10.9100	2.6700	12.1200		

41 T	-12.7900	-18.1500	-23.6900		
41 M	-4.8480	-7.5350	-3.6370	1.4210	2.4350
41 B	3.0970	3.0740	16.4200		
42 T	-7.5150	-24.5600	-25.4800		
42 M	-4.9040	-9.7860	-3.8420	-0.0429	6.0380
42 B	-2.2940	4.9920	17.7900		
43 T	-4.8250	-31.2600	-25.2900		
43 M	-5.3720	-11.7700	-4.2690	-0.9534	9.2690
43 B	-5.9180	7.7200	16.7500		
44 T	-4.0740	-37.7400	-24.0200		
44 M	-6.1980	-13.6200	-5.1110	-1.3550	12.0000
44 B	-8.3220	10.5000	13.8000		
45 T	-4.5500	-43.9200	-22.7700		
45 M	-7.3160	-15.8500	-6.8720	-1.2340	14.1900
45 B	-10.0800	12.2200	9.0290		
46 T	-4.6070	-49.4100	-22.8500		
46 M	-8.0380	-18.6500	-10.1800	-0.4607	15.9000
46 B	-11.4700	12.1100	2.4930		
47 T	-0.7076	-58.8300	-24.2600		
47 M	-6.2770	-27.7900	-15.0900	0.9971	17.8700
47 B	-11.8500	3.2480	-5.9240		
48 T	14.9100	-60.3300	-13.4600		
48 M	5.5530	-31.8700	-7.8330	2.1970	20.7600
48 B	-3.8040	-3.4010	-2.2060		
49 T	10.9400	-54.5500	-6.2830		
49 M	0.7772	-26.1600	-3.1660	0.3116	22.3400
49 B	-9.3810	2.2310	-0.0484		
50 T	21.3600	-50.5300	1.1440		
50 M	3.7170	-19.0300	-2.5070	-0.3035	21.1300
50 B	-13.9300	12.4800	-6.1580		
51 T	20.1000	-48.6500	13.1100		
51 M	3.4990	-15.4800	-1.6920	-0.2440	18.7200
51 B	-13.1000	17.6900	-16.5000		
52 T	16.7900	-43.9300	22.6200		
52 M	3.1200	-12.9500	-0.4425	-1.2630	15.8100
52 B	-10.5500	18.0400	-23.5000		
53 T	10.5100	-38.6300	29.0700		
53 M	2.6760	-10.4700	0.3727	-2.8570	12.2600
53 B	-5.1600	17.7000	-28.3300		
54 T	1.1250	-32.7600	32.6700		
54 M	2.2650	-8.1650	1.0140	-4.6880	7.9320
54 B	3.4040	16.4300	-30.6400		
55 T	-14.1900	-25.5100	32.6400		
55 M	1.6890	-5.5120	1.6420	-6.9460	2.3200
55 B	17.5700	14.4900	-29.3500		
56 T	-33.3500	-18.4500	28.2600		
56 M	0.9917	-2.9210	2.2720	-9.2490	-2.6890
56 B	35.3300	12.6000	-23.7100		
57 T	-53.3100	-12.5600	24.1300		
57 M	0.2782	-0.9180	2.8610	-11.4900	-2.2360
57 B	53.8600	10.7200	-18.4100		
58 T	-48.1700	-9.0550	-17.5900		
58 M	-6.7930	-2.1650	-5.1730	10.0500	-1.8610
58 B	34.5800	4.7240	7.2440		
59 T	-29.3900	-10.0100	-21.9400		
59 M	-6.0110	-4.4170	-4.3490	6.9250	-2.4740
59 B	17.3600	1.1780	13.2400		
60 T	-16.0800	-11.9900	-26.2200		
60 M	-5.5370	-6.6810	-3.8520	4.5010	0.3803
60 B	5.0070	-1.3710	18.5100		
61 T	-7.1760	-14.6400	-27.8600		
61 M	-5.4840	-8.7180	-3.6370	2.6500	3.4780
61 B	-3.7930	-2.7980	20.5900		
62 T	-1.8320	-17.5300	-27.2600		
62 M	-5.8950	-10.4400	-3.6820	1.3280	6.2490
62 B	-9.9580	-3.3610	19.9000		
63 T	0.6522	-20.2900	-25.2000		

63 M	-6.8440	-11.8800	-4.0690	0.4803	8.5680
63 B	-14.3400	-3.4720	17.0700		
64 T	0.4880	-22.3500	-22.6500		
64 M	-8.6880	-12.8300	-5.1470	0.0048	10.3500
64 B	-17.8600	-3.3210	12.3500		
65 T	-2.8210	-23.9400	-21.3100		
65 M	-12.0800	-14.2300	-7.7770	-0.2765	11.5100
65 B	-21.3400	-4.5200	5.7540		
66 T	-10.4900	-21.8000	-24.9200		
66 M	-17.7400	-12.9000	-14.2600	-0.6604	12.3800
66 B	-24.9800	-3.9920	-3.5990		
67 T	-26.2900	-34.4600	-41.0100		
67 M	-26.1300	-40.5500	-35.2600	-1.6930	18.1000
67 B	-25.9600	-46.6400	-29.5000		
68 T	58.2900	-30.5800	-21.7700		
68 M	20.9800	-37.4700	-3.1750	-3.1130	20.1500
68 B	-16.3400	-44.3500	15.4200		
69 T	38.6100	-27.6300	3.2180		
69 M	7.7850	-16.0600	-1.4610	-0.8097	16.6000
69 B	-23.0400	-4.4850	-6.1390		
70 T	36.6100	-26.8100	13.4600		
70 M	6.4420	-16.1000	-0.7523	-1.2780	16.0100
70 B	-23.7200	-5.3900	-14.9600		
71 T	32.0000	-25.8700	24.4600		
71 M	5.1290	-12.9200	0.2350	-4.1700	14.6600
71 B	-21.7400	0.0393	-23.9900		
72 T	22.5900	-23.9600	32.8500		
72 M	4.6110	-10.4400	1.0240	-7.6230	11.8200
72 B	-13.3700	3.0920	-30.8000		
73 T	7.5670	-21.3200	37.8600		
73 M	4.0800	-7.9620	1.6440	-11.1100	7.6460
73 B	0.5932	5.4000	-34.5800		
74 T	-16.8200	-18.3200	38.4400		
74 M	3.6000	-5.2920	2.3160	-14.8400	1.7500
74 B	24.0200	7.7340	-33.8100		
75 T	-47.0500	-16.0300	33.6000		
75 M	2.9670	-2.7500	3.1030	-18.0600	-3.6170
75 B	52.9900	10.5300	-27.3900		
76 T	-78.2000	-14.7500	28.7800		
76 M	2.2640	-0.6868	3.7880	-20.6300	-2.7600
76 B	82.7200	13.3800	-21.2000		
77 T	-60.1200	-10.3600	-18.6700		
77 M	-6.9620	-2.1000	-5.8320	12.8900	-2.2080
77 B	46.2000	6.1560	7.0100		
78 T	-36.5300	-9.4200	-22.9900		
78 M	-6.2320	-4.1560	-4.8580	9.6710	-3.3950
78 B	24.0600	1.1090	13.2700		
79 T	-19.1500	-9.1760	-27.1200		
79 M	-5.7600	-6.2070	-4.0770	6.9920	-0.9756
79 B	7.6340	-3.2390	18.9600		
80 T	-7.0730	-9.3390	-28.4900		
80 M	-5.6550	-8.0470	-3.5330	4.8210	1.7080
80 B	-4.2380	-6.7560	21.4200		
81 T	0.7089	-9.6990	-27.4900		
81 M	-5.9560	-9.5880	-3.2160	3.1660	4.0890
81 B	-12.6200	-9.4780	21.0600		
82 T	5.0240	-9.9650	-24.8000		
82 M	-6.7660	-10.7000	-3.1280	1.9650	6.0890
82 B	-18.5600	-11.4300	18.5500		
83 T	6.1400	-9.8420	-20.8500		
83 M	-8.4020	-11.3800	-3.1990	1.0310	7.7350
83 B	-22.9400	-12.9200	14.4500		
84 T	2.8280	-8.0230	-16.0200		
84 M	-11.6800	-10.4000	-3.5280	-0.0748	9.2630
84 B	-26.2000	-12.7800	8.9650		
85 T	-7.0370	-6.7990	-6.8480		
85 M	-17.3700	-11.4200	-2.0810	-1.9050	11.7900

85 B	-27.7100	-16.0500	2.6850		
86 T	-25.1800	-4.5540	14.7900		
86 M	-27.9700	10.3400	-2.3690	-3.5150	16.7600
86 B	-30.7700	25.2300	-19.5300		
87 T	65.0600	-0.6530	25.4800		
87 M	21.9000	7.6480	26.3800	-0.7103	14.9200
87 B	-21.2500	15.9500	27.2800		
88 T	50.6300	-11.9400	4.0210		
88 M	11.6500	-21.2600	0.0359	1.1610	12.1300
88 B	-27.3300	-30.5900	-3.9490		
89 T	49.0100	-9.6390	12.4200		
89 M	6.8910	-14.4200	0.7559	-0.6636	15.3500
89 B	-35.2200	-19.1900	-10.9100		
90 T	46.8400	-11.9800	23.8000		
90 M	6.5550	-13.1300	0.8289	-5.7990	15.9300
90 B	-33.7300	-14.2800	-22.1400		
91 T	34.8800	-11.9700	34.1600		
91 M	5.8670	-10.2700	1.5250	-11.7600	13.9200
91 B	-23.1500	-8.5650	-31.1100		
92 T	14.7600	-11.3300	40.4900		
92 M	5.9540	-7.7350	2.0020	-17.4200	9.5180
92 B	-2.8540	-4.1430	-36.4900		
93 T	-18.9200	-11.9000	41.3300		
93 M	5.6530	-5.2150	2.6970	-22.8100	2.5970
93 B	30.2300	1.4710	-35.9400		
94 T	-59.8600	-14.1700	36.2100		
94 M	5.3950	-2.8230	3.7290	-26.6700	-3.7410
94 B	70.6500	8.5210	-28.7500		
95 T	-101.9000	-17.1000	31.3200		
95 M	4.5600	-0.5862	4.7350	-29.4000	-2.9610
95 B	111.0000	15.9300	-21.8500		
96 T	-69.5000	-11.7600	-19.3400		
96 M	-6.8800	-2.0810	-6.3330	14.9300	-2.3870
96 B	55.7400	7.6000	6.6780		
97 T	-42.0700	-9.9920	-23.4100		
97 M	-6.1560	-4.0790	-5.2410	11.6600	-3.8810
97 B	29.7600	1.8340	12.9200		
98 T	-21.5400	-8.5140	-27.1800		
98 M	-5.7040	-6.0050	-4.2600	8.7570	-1.7400
98 B	10.1300	-3.4960	18.6600		
99 T	-7.0250	-7.2150	-28.2200		
99 M	-5.5680	-7.7050	-3.4970	6.3290	0.6279
99 B	-4.1100	-8.1950	21.2300		
100 T	2.6550	-6.0680	-26.9400		
100 M	-5.7540	-9.1060	-2.9530	4.4390	2.6980
100 B	-14.1600	-12.1400	21.0300		
101 T	8.5670	-4.9720	-23.8600		
101 M	-6.2950	-10.1700	-2.5410	3.0190	4.4580
101 B	-21.1600	-15.3800	18.7800		
102 T	11.3900	-3.5550	-19.3400		
102 M	-7.2170	-10.6200	-2.2200	1.8870	6.0380
102 B	-25.8300	-17.6800	14.9000		
103 T	11.5700	-2.0110	-12.7100		
103 M	-8.3490	-10.7300	-1.3730	0.8562	7.8560
103 B	-28.2700	-19.4400	9.9600		
104 T	12.7500	-2.0070	-4.9770		
104 M	-7.5230	-8.2400	-2.0280	0.2728	10.3600
104 B	-27.7900	-14.4700	0.9205		
105 T	25.1700	5.2840	-3.6600		
105 M	-4.4240	2.0040	-2.9470	1.4900	12.5500
105 B	-34.0200	-1.2760	-2.2350		
106 T	28.6200	12.0700	6.9630		
106 M	-5.4190	1.7540	9.0120	4.8230	10.9400
106 B	-39.4600	-8.5650	11.0600		
107 T	51.1500	9.1920	11.0300		
107 M	8.6010	-10.0200	7.8940	4.2410	10.6500
107 B	-33.9500	-29.2400	4.7600		

108 T	57.6300	2.8560	9.3610		
108 M	6.4300	-15.1000	0.1877	1.8250	15.7900
108 B	-44.7700	-33.0500	-8.9860		
109 T	58.5200	0.7947	21.6200		
109 M	5.9290	-12.5600	1.1590	-6.0110	19.3300
109 B	-46.6600	-25.9200	-19.3100		
110 T	47.9000	-0.4266	33.7800		
110 M	7.5300	-10.0900	1.3720	-15.1800	18.1800
110 B	-32.8400	-19.7600	-31.0400		
111 T	20.7300	-0.6148	41.4800		
111 M	6.8350	-7.5070	2.0260	-23.7200	13.0400
111 B	-7.0590	-14.4000	-37.4300		
112 T	-19.7500	-5.2170	40.8800		
112 M	8.2250	-5.2680	2.3880	-30.5100	4.0060
112 B	36.2000	-5.3190	-36.1000		
113 T	-69.5000	-13.1100	36.7900		
113 M	7.8960	-3.3840	4.4130	-33.9000	-3.7610
113 B	85.2900	6.3380	-27.9600		
114 T	-121.1000	-19.2200	32.4400		
114 M	6.6650	-0.6125	5.7460	-36.4500	-3.0230
114 B	134.4000	18.0000	-20.9500		
115 T	-80.4300	-13.8400	-20.2900		
115 M	-6.5320	-2.1200	-6.9520	17.3800	-2.4580
115 B	67.3700	9.6030	6.3850		
116 T	-48.2200	-11.6900	-23.6900		
116 M	-5.8110	-4.1640	-5.6670	13.8700	-4.1010
116 B	36.6000	3.3570	12.3500		
117 T	-24.0700	-9.1690	-26.7600		
117 M	-5.4130	-5.9450	-4.4500	10.5300	-2.2390
117 B	13.2400	-2.7210	17.8600		
118 T	-6.9390	-6.6430	-27.3400		
118 M	-5.2950	-7.4580	-3.5030	7.7710	-0.2963
118 B	-3.6510	-8.2740	20.3300		
119 T	4.8150	-4.2980	-25.7600		
119 M	-5.3490	-8.7370	-2.7810	5.6570	1.3700
119 B	-15.5100	-13.1800	20.2000		
120 T	12.5800	-2.0470	-22.4600		
120 M	-5.5620	-9.6910	-2.2120	4.0650	2.8220
120 B	-23.7100	-17.3400	18.0400		
121 T	17.4200	0.3250	-17.6600		
121 M	-5.8270	-10.2000	-1.7380	2.8850	4.2030
121 B	-29.0700	-20.7300	14.1900		
122 T	20.8100	2.9100	-12.0900		
122 M	-5.6070	-9.7020	-1.7930	2.2140	5.6960
122 B	-32.0300	-22.3100	8.5080		
123 T	24.2100	7.2500	-7.7770		
123 M	-5.6020	-6.4960	-2.4830	2.4160	7.1000
123 B	-35.4100	-20.2400	2.8100		
124 T	25.9900	13.1200	-2.6690		
124 M	-7.1570	-2.1840	-0.5102	3.5240	7.8000
124 B	-40.3100	-17.4900	1.6490		
125 T	33.6900	19.2700	5.0530		
125 M	-4.5960	-1.7310	3.9950	5.1280	7.3290
125 B	-42.8800	-22.7400	2.9380		
126 T	42.3700	23.3400	9.5010		
126 M	-2.2810	-5.7550	5.0860	6.0940	7.3490
126 B	-46.9300	-34.8500	0.6702		
127 T	56.2100	24.6100	6.3990		
127 M	-0.9251	-11.5100	-0.5196	9.4710	15.9500
127 B	-58.0600	-47.6200	-7.4380		
128 T	77.9500	25.5900	14.0200		
128 M	6.3050	-13.0400	-1.3040	-0.3512	30.0400
128 B	-65.3400	-51.6700	-16.6300		
129 T	65.0300	26.8200	30.8800		
129 M	6.2660	-9.4220	0.1947	-24.8700	31.8000
129 B	-52.5000	-45.6600	-30.4900		
130 T	36.7800	20.2500	34.7700		

130 M	13.1900	-7.0110	-1.0100	-39.3200	18.2000
130 B	-10.3900	-34.2700	-36.7900		
131 T	-19.1400	2.1730	38.5700		
131 M	12.8600	-7.3460	2.7550	-39.1200	3.8890
131 B	44.8600	-16.8700	-33.0600		
132 T	-82.7600	-12.8600	34.7300		
132 M	11.1500	-4.5600	5.9210	-42.0800	-3.6290
132 B	105.0000	3.7390	-22.8900		
133 T	-141.1000	-22.4600	32.4900		
133 M	9.1400	-0.7951	7.4750	-44.8600	-3.0610
133 B	159.4000	20.8700	-17.5400		
134 T	-91.4100	-16.2400	-21.5800		
134 M	-6.0090	-2.2480	-7.6580	20.1900	-2.2870
134 B	79.3900	11.7400	6.2660		
135 T	-53.9200	-13.9300	-23.9100		
135 M	-5.2310	-4.4160	-6.0300	16.0300	-3.7960
135 B	43.4600	5.0970	11.8500		
136 T	-26.2500	-10.5400	-26.0400		
136 M	-5.0660	-5.9880	-4.5590	12.0200	-2.2890
136 B	16.1100	-1.4390	16.9200		
137 T	-6.8300	-7.1490	-26.1000		
137 M	-4.9520	-7.2770	-3.5460	8.9710	-0.9204
137 B	-3.0730	-7.4050	19.0000		
138 T	6.8450	-3.9760	-24.3100		
138 M	-4.9190	-8.4290	-2.7320	6.6860	0.2945
138 B	-16.6800	-12.8800	18.8500		
139 T	16.3300	-0.9484	-20.8800		
139 M	-4.9180	-9.2820	-2.1050	4.9660	1.3910
139 B	-26.1700	-17.6200	16.6700		
140 T	22.9100	2.3000	-16.1500		
140 M	-4.8300	-9.5730	-1.7870	3.7790	2.4150
140 B	-32.5700	-21.4400	12.5700		
141 T	27.4100	6.5520	-10.9600		
141 M	-4.9280	-8.5140	-1.8770	3.2830	3.3510
141 B	-37.2700	-23.5800	7.2030		
142 T	30.0700	11.4700	-5.6430		
142 M	-5.6430	-6.4500	-1.3410	3.4970	3.9750
142 B	-41.3500	-24.3700	2.9600		
143 T	32.6700	16.4600	-0.3641		
143 M	-6.0200	-4.4470	-0.0358	4.0730	4.1580
143 B	-44.7100	-25.3500	0.2926		
144 T	36.4600	22.7100	7.1210		
144 M	-6.2760	-3.5390	2.5630	5.0550	3.8550
144 B	-49.0100	-29.7800	-1.9960		
145 T	41.9200	31.7300	14.7700		
145 M	-5.9330	-4.4460	4.5290	6.7790	3.9560
145 B	-53.7900	-40.6200	-5.7140		
146 T	44.3500	46.8800	13.0500		
146 M	-10.2100	-3.9720	2.8920	12.7700	2.6510
146 B	-64.7600	-54.8200	-7.2670		
147 T	56.8700	80.7200	-4.8320		
147 M	-23.3300	-11.6800	-15.6700	42.5700	63.9800
147 B	-103.5000	-104.1000	-26.5100		
148 T	142.9000	81.2800	-4.1740		
148 M	35.3600	-11.3800	-12.9500	-84.0300	68.1600
148 B	-72.2300	-104.0000	-21.7400		
149 T	48.9300	27.9500	30.6600		
149 M	22.8400	-11.9600	1.5590	-53.0300	5.8530
149 B	-3.2610	-51.8700	-27.5500		
150 T	-19.1500	10.1900	32.9000		
150 M	16.6500	-9.1220	5.4390	-45.2700	0.8401
150 B	52.4500	-28.4300	-22.0200		
151 T	-68.2600	-31.3400	48.6800		
151 M	16.3000	-9.2160	0.8873	-45.5900	12.9600
151 B	100.9000	12.9100	-46.9100		
152 T	-166.9000	-23.2200	32.8400		
152 M	12.2900	-2.1930	11.0100	-56.8500	-0.2699

152 B	191.5000	18.8300	-10.8100		
153 T	-102.7000	-18.2600	-23.5600		
153 M	-4.9190	-2.7390	-8.5100	24.4700	-1.1270
153 B	92.8800	12.7800	6.5380		
154 T	-57.6100	-15.7000	-24.5000		
154 M	-4.6860	-5.0370	-6.0140	17.4900	-2.2790
154 B	48.2400	5.6300	12.4700		
155 T	-27.6900	-12.3800	-24.9800		
155 M	-4.6540	-6.0020	-4.6610	12.9900	-1.9580
155 B	18.3800	0.3749	15.6600		
156 T	-6.7320	-8.6880	-24.6800		
156 M	-4.6070	-7.1760	-3.5820	9.8470	-1.2600
156 B	-2.4820	-5.6630	17.5200		
157 T	8.4920	-5.4040	-22.7700		
157 M	-4.5850	-8.1640	-2.7410	7.4900	-0.5011
157 B	-17.6600	-10.9200	17.2800		
158 T	19.5000	-2.1920	-19.2900		
158 M	-4.5940	-8.8470	-2.1250	5.6290	0.2212
158 B	-28.6900	-15.5000	15.0400		
159 T	27.1100	1.3500	-14.4400		
159 M	-4.6670	-8.8960	-1.7780	4.3630	0.7987
159 B	-36.4500	-19.1400	10.8900		
160 T	32.1900	5.6240	-8.7440		
160 M	-5.0130	-8.0360	-1.4410	3.7620	1.2210
160 B	-42.2100	-21.7000	5.8630		
161 T	35.5000	10.0400	-2.9850		
161 M	-5.5080	-6.6620	-0.7042	3.7220	1.4060
161 B	-46.5200	-23.3600	1.5760		
162 T	38.0100	14.1300	2.6280		
162 M	-5.9960	-5.4530	0.4784	3.9540	1.3400
162 B	-50.0000	-25.0400	-1.6710		
163 T	41.7100	19.8200	10.7400		
163 M	-6.2240	-4.6820	2.5540	4.5150	0.8713
163 B	-54.1600	-29.1900	-5.6270		
164 T	46.1000	27.9600	20.8400		
164 M	-6.7290	-4.7420	5.0340	5.9450	-0.5551
164 B	-59.5600	-37.4400	-10.7800		
165 T	48.5400	43.1200	34.9500		
165 M	-9.5590	-4.4120	8.0440	9.8050	-2.7380
165 B	-67.6600	-51.9400	-18.8700		
166 T	55.5300	44.5400	65.6100		
166 M	-21.7800	-5.8000	19.5800	34.0800	-45.2800
166 B	-99.0900	-56.1400	-26.4500		
167 T	130.4000	44.5700	37.7100		
167 M	31.6900	-4.9910	23.7800	-74.9300	-49.6700
167 B	-66.9800	-54.5500	9.8490		
168 T	43.3300	26.2200	24.8400		
168 M	20.3200	-11.0900	11.6100	-49.0600	-8.9680
168 B	-2.7020	-48.4000	-1.6270		
169 T	-23.3500	2.7120	25.3400		
169 M	15.5300	-8.4470	8.8230	-44.7900	-2.7570
169 B	54.4100	-19.6100	-7.6970		
170 T	-66.3200	-39.5400	44.9000		
170 M	16.3600	-10.0900	1.9710	-44.8000	15.7300
170 B	99.0300	19.3600	-40.9500		
171 T	-170.0000	-40.7500	45.8900		
171 M	12.6000	-8.3580	10.9700	-54.5700	15.6600
171 B	195.2000	24.0300	-23.9500		
172 T	-106.9000	-29.7400	-35.9700		
172 M	-3.1780	-7.3260	-8.6180	22.1500	6.9860
172 B	100.6000	15.0900	18.7400		
173 T	-69.6600	-19.0400	-25.9500		
173 M	-3.7390	-5.0700	-6.6560	18.2500	0.8763
173 B	62.1800	8.9040	12.6400		
174 T	-33.6000	-14.6800	-24.0600		
174 M	-3.9340	-6.0670	-4.8760	14.4400	-1.3970
174 B	25.7300	2.5440	14.3100		

175 T	-7.2770	-11.3100	-23.0500		
175 M	-4.1760	-6.9550	-3.6030	11.1100	-1.5580
175 B	-1.0760	-2.6040	15.8500		
176 T	10.6700	-8.4070	-20.9000		
176 M	-4.3480	-7.8740	-2.6600	8.4730	-1.1290
176 B	-19.3600	-7.3410	15.5800		
177 T	22.7500	-5.6160	-17.1100		
177 M	-4.5470	-8.3140	-2.0370	6.4800	-0.8687
177 B	-31.8500	-11.0100	13.0300		
178 T	31.3300	-2.5710	-12.1000		
178 M	-4.8110	-8.2730	-1.5530	4.9380	-0.8044
178 B	-40.9500	-13.9800	8.9920		
179 T	37.2300	0.8485	-6.2090		
179 M	-5.1870	-7.6950	-0.9686	3.9480	-0.8794
179 B	-47.6100	-16.2400	4.2720		
180 T	41.1900	4.0540	-0.3647		
180 M	-5.5720	-6.9270	-0.1429	3.4590	-1.0630
180 B	-52.3400	-17.9100	0.0789		
181 T	44.2600	6.8780	5.2110		
181 M	-5.8130	-6.2850	0.8794	3.2240	-1.3370
181 B	-55.8900	-19.4500	-3.4520		
182 T	48.3800	10.6000	13.4900		
182 M	-5.8600	-5.8910	2.6530	3.0640	-2.0940
182 B	-60.1000	-22.3800	-8.1860		
183 T	53.9400	15.2500	25.2200		
183 M	-5.6360	-5.9450	5.3090	3.0320	-3.8740
183 B	-65.2100	-27.1500	-14.6100		
184 T	63.5600	13.4400	38.2100		
184 M	-3.9320	-8.2910	8.9420	3.0480	-11.0900
184 B	-71.4200	-30.0200	-20.3300		
185 T	80.4900	5.6310	34.2200		
185 M	4.6570	-7.8890	7.5840	-10.9800	-15.3700
185 B	-71.1800	-21.4100	-19.0500		
186 T	55.2900	5.9180	19.1600		
186 M	0.5184	-4.6260	8.2250	-17.1300	-17.0000
186 B	-54.2600	-15.1700	-2.7110		
187 T	28.3300	8.6390	20.2300		
187 M	9.2350	-3.9210	12.4400	-34.2800	-14.4300
187 B	-9.8620	-16.4800	4.6440		
188 T	-24.2700	-3.2810	20.8500		
188 M	10.8700	-6.5380	10.5600	-37.3000	-4.5690
188 B	46.0100	-9.7950	0.2748		
189 T	-85.0100	-17.6100	28.0000		
189 M	10.4900	-6.2490	9.9760	-37.8400	5.0920
189 B	106.0000	5.1110	-8.0490		
190 T	-146.5000	-36.7500	41.9400		
190 M	10.9700	-8.5550	9.9370	-35.7200	12.9700
190 B	168.5000	19.6400	-22.0600		
191 T	-94.4100	-26.4600	-28.9400		
191 M	-0.5766	-7.2100	-7.4670	13.4000	7.1920
191 B	93.2600	12.0400	14.0100		
192 T	-75.2700	-19.3900	-26.1200		
192 M	-2.6360	-6.1480	-6.8610	18.0900	7.0040
192 B	70.0000	7.0900	12.4000		
193 T	-37.5300	-13.5500	-22.2800		
193 M	-3.3700	-5.9220	-4.7830	16.0200	4.7810
193 B	30.7900	1.7090	12.7200		
194 T	-7.0430	-10.6200	-20.6500		
194 M	-3.8770	-6.9360	-3.4240	12.7400	4.2330
194 B	-0.7123	-3.2510	13.8000		
195 T	12.7900	-8.2960	-18.0100		
195 M	-4.3340	-7.5900	-2.4420	10.0100	4.2590
195 B	-21.4600	-6.8840	13.1200		
196 T	25.2600	-6.3510	-14.5300		
196 M	-4.7250	-7.9120	-1.8320	7.8090	4.3060
196 B	-34.7100	-9.4740	10.8600		
197 T	34.3100	-4.1410	-9.8650		

197 M	-5.1130	-7.8630	-1.2930	5.6740	4.1150
197 B	-44.5400	-11.5800	7.2800		
198 T	40.6600	-1.8720	-4.5410		
198 M	-5.4830	-7.5030	-0.6555	3.9510	3.7180
198 B	-51.6200	-13.1300	3.2300		
199 T	45.0500	0.1562	0.5723		
199 M	-5.7300	-7.0640	0.1160	2.7760	3.3470
199 B	-56.5100	-14.2800	-0.3402		
200 T	48.4900	1.7930	5.3360		
200 M	-5.8060	-6.7580	0.9825	1.7990	3.0000
200 B	-60.1100	-15.3100	-3.3710		
201 T	53.2900	3.6810	12.3500		
201 M	-5.4810	-6.6080	2.3950	0.4801	2.2560
201 B	-64.2500	-16.9000	-7.5650		
202 T	60.7400	4.1080	21.9100		
202 M	-4.2030	-7.3640	4.6020	-1.3680	0.2762
202 B	-69.1400	-18.8400	-12.7100		
203 T	69.3500	1.2800	26.8300		
203 M	-0.8400	-7.7740	5.1670	-5.8320	-2.0170
203 B	-71.0300	-16.8300	-16.4900		
204 T	65.3400	-1.8030	24.8300		
204 M	0.1862	-7.0780	5.8700	-11.7400	-3.7700
204 B	-64.9600	-12.3500	-13.0900		
205 T	51.2600	-3.6450	21.4500		
205 M	3.9480	-5.9660	6.9100	-18.8400	-3.5570
205 B	-43.3700	-8.2880	-7.6260		
206 T	19.6300	-5.0930	17.6800		
206 M	4.0610	-5.1600	7.5820	-23.5400	-1.8540
206 B	-11.5100	-5.2270	-2.5160		
207 T	-24.1900	-7.6320	19.4200		
207 M	7.0230	-4.8330	9.5440	-28.9000	1.5580
207 B	38.2400	-2.0340	-0.3325		
208 T	-83.0000	-17.1300	25.4200		
208 M	8.7080	-5.8120	9.8680	-29.8400	8.0810
208 B	100.4000	5.5060	-5.6790		
209 T	-126.6000	-30.5200	33.1800		
209 M	9.5570	-7.7490	9.1160	-21.2500	10.5800
209 B	145.7000	15.0300	-14.9500		
MAX	195.2000	89.9500		42.5700	68.1600
MIN	-170.0000	-136.2000		-84.0300	-49.6700
210 T	-91.5200	-17.2100	-24.9600		
210 M	1.9130	-0.2856	-9.0230	16.8800	3.5240
210 B	95.3400	16.6400	6.9150		
211 T	-63.3000	-10.7900	-32.1300		
211 M	-0.0689	0.6349	-8.4840	17.3900	6.5730
211 B	63.1600	12.0600	15.1600		
212 T	-31.3200	-2.1750	-30.6600		
212 M	-1.9520	0.4057	-6.3510	15.8300	6.5550
212 B	27.4200	2.9860	17.9600		
213 T	-3.8870	2.8740	-27.4800		
213 M	-3.3880	-0.5306	-4.2660	12.8100	5.8020
213 B	-2.8900	-3.9350	18.9500		
214 T	14.6700	6.6090	-23.7200		
214 M	-4.5170	-1.2040	-3.0070	10.1500	5.6660
214 B	-23.7000	-9.0170	17.7000		
215 T	26.7700	9.6980	-18.7900		
215 M	-5.3000	-1.4930	-2.1820	7.9230	5.6670
215 B	-37.3700	-12.6800	14.4300		
216 T	35.6500	12.5800	-12.3800		
216 M	-5.9300	-1.4520	-1.4560	5.6500	5.5620
216 B	-47.5100	-15.4800	9.4710		
217 T	42.0000	15.2000	-4.9880		
217 M	-6.3630	-1.1470	-0.6269	3.8440	5.3360
217 B	-54.7300	-17.4900	3.7340		
218 T	46.5500	17.3500	2.0670		

218 M	-6.5320	-0.8141	0.2924	2.6660	5.0340
218 B	-59.6200	-18.9800	-1.4820		
219 T	50.1900	19.0000	8.4810		
219 M	-6.4320	-0.5933	1.2450	1.5320	4.6420
219 B	-63.0500	-20.1900	-5.9910		
220 T	54.9600	20.0300	17.2900		
220 M	-5.7050	-0.7107	2.7240	-0.1740	3.6990
220 B	-66.3700	-21.4600	-11.8400		
221 T	61.2000	18.9700	26.7800		
221 M	-3.6450	-1.1850	4.2760	-3.0630	2.0000
221 B	-68.4900	-21.3400	-18.2300		
222 T	63.6300	14.8000	31.3300		
222 M	-1.1340	-1.3820	5.2560	-7.4720	0.3330
222 B	-65.9000	-17.5600	-20.8100		
223 T	57.9300	10.4200	30.0300		
223 M	1.7470	-0.6598	6.0690	-12.5900	-0.5202
223 B	-54.4400	-11.7400	-17.9000		
224 T	41.9300	7.4200	27.0000		
224 M	3.5440	0.3338	7.2520	-17.3400	-0.1923
224 B	-34.8400	-6.7520	-12.5000		
225 T	18.7700	4.9750	24.8800		
225 M	6.1280	1.1940	8.8330	-21.4300	1.3670
225 B	-6.5150	-2.5880	-7.2190		
226 T	-17.9000	0.8923	25.8000		
226 M	8.5910	1.6600	10.9100	-25.1300	4.5710
226 B	35.0900	2.4270	-3.9830		
227 T	-63.7100	-9.5570	30.8400		
227 M	11.4400	1.5040	12.6600	-26.2900	8.1470
227 B	86.6000	12.5600	-5.5230		
228 T	-110.8000	-20.0000	27.1400		
228 M	13.5300	0.7226	12.6100	-22.3400	5.4700
228 B	137.9000	21.4500	-1.9200		
229 T	-103.8000	-12.2100	-18.1300		
229 M	5.0080	0.3199	-7.6740	17.5900	-0.5942
229 B	113.8000	12.8500	2.7850		
230 T	-61.7600	-0.8505	-21.3700		
230 M	2.7900	0.5238	-6.6800	12.3100	-1.9110
230 B	67.3400	1.8980	8.0060		
231 T	-28.6600	3.1340	-22.1200		
231 M	-0.6595	-0.2457	-4.5600	9.9750	-1.8190
231 B	27.3400	-3.6250	13.0000		
232 T	-1.8590	6.0780	-20.1000		
232 M	-3.4060	-0.6418	-2.9760	8.0180	-2.3410
232 B	-4.9530	-7.3610	14.1400		
233 T	17.6100	8.2140	-17.2900		
233 M	-5.1680	-0.9491	-2.0240	6.2270	-2.6650
233 B	-27.9500	-10.1100	13.2400		
234 T	30.7900	9.9020	-13.5900		
234 M	-6.2990	-1.0790	-1.4480	4.8180	-2.8110
234 B	-43.3800	-12.0600	10.6900		
235 T	40.7600	11.4100	-8.6860		
235 M	-7.0790	-1.0600	-0.9384	3.5400	-2.8330
235 B	-54.9200	-13.5300	6.8090		
236 T	48.1200	12.6600	-2.8990		
236 M	-7.4990	-0.9397	-0.3709	2.6430	-2.7780
236 B	-63.1200	-14.5400	2.1580		
237 T	53.3800	13.5200	2.6390		
237 M	-7.5590	-0.8202	0.2249	2.1170	-2.8500
237 B	-68.5000	-15.1600	-2.1890		
238 T	57.3500	13.9500	7.4880		
238 M	-7.3300	-0.7874	0.8094	1.5950	-3.0810
238 B	-72.0100	-15.5300	-5.8690		
239 T	61.5900	13.7100	13.4500		
239 M	-6.4600	-0.8696	1.5460	0.5810	-3.5460
239 B	-74.5100	-15.4500	-10.3600		
240 T	64.7600	12.1900	19.1000		
240 M	-4.8320	-1.0450	2.3190	-1.4740	-4.2010

240 B	-74.4200	-14.2800	-14.4600		
241 T	61.9700	9.5330	21.2300		
241 M	-2.5580	-1.0210	2.8760	-4.5690	-4.6940
241 B	-67.0900	-11.5700	-15.4800		
242 T	51.4200	7.0790	20.3400		
242 M	-0.3093	-0.6960	3.5360	-8.0590	-4.7800
242 B	-52.0300	-8.4710	-13.2700		
243 T	35.0500	5.5770	18.4800		
243 M	1.9810	-0.2505	4.4180	-11.1200	-4.3840
243 B	-31.0900	-6.0780	-9.6420		
244 T	13.2100	4.4850	17.0500		
244 M	4.2710	0.1269	5.5770	-13.7300	-3.4730
244 B	-4.6690	-4.2310	-5.8980		
245 T	-17.6700	2.8030	17.1100		
245 M	7.7220	0.3048	7.2890	-15.8400	-1.9420
245 B	33.1200	-2.1930	-2.5310		
246 T	-58.3000	0.6975	17.9400		
246 M	12.3600	1.2290	9.7920	-17.1400	-0.7206
246 B	83.0100	1.7600	1.6480		
247 T	-117.2000	-12.8800	18.5000		
247 M	15.7400	1.3910	11.1000	-21.1300	0.4573
247 B	148.7000	15.6700	3.7100		
248 T	-96.6200	-9.4300	-9.1120		
248 M	13.3800	0.8625	-4.9340	17.2200	1.0720
248 B	123.4000	11.1600	-0.7562		
249 T	-61.4100	-0.2277	-12.4700		
249 M	5.1750	0.0239	-2.7610	17.5600	0.2535
249 B	71.7600	0.2754	6.9470		
250 T	-29.3500	0.3705	-12.7200		
250 M	-0.6067	-0.2347	-1.7060	16.1800	-0.6827
250 B	28.1400	-0.8398	9.3080		
251 T	-2.8870	1.4010	-11.9400		
251 M	-4.3120	-0.3267	-1.0830	14.0400	-0.9539
251 B	-5.7370	-2.0540	9.7700		
252 T	16.6600	2.0180	-10.3000		
252 M	-6.5560	-0.3904	-0.7186	11.5900	-1.2120
252 B	-29.7700	-2.7990	8.8610		
253 T	30.2200	2.4670	-8.0700		
253 M	-7.9170	-0.4116	-0.5166	9.0320	-1.3830
253 B	-46.0500	-3.2900	7.0370		
254 T	40.6600	2.9350	-5.1490		
254 M	-8.8570	-0.4098	-0.3426	6.2950	-1.4910
254 B	-58.3700	-3.7540	4.4630		
255 T	48.5000	3.3290	-1.7280		
255 M	-9.3600	-0.3824	-0.1410	3.6100	-1.5750
255 B	-67.2200	-4.0940	1.4470		
256 T	54.0100	3.5390	1.4660		
256 M	-9.4370	-0.3606	0.0703	1.3240	-1.6430
256 B	-72.8900	-4.2600	-1.3260		
257 T	57.9600	3.5660	4.1810		
257 M	-9.1970	-0.3608	0.2569	-0.6346	-1.7070
257 B	-76.3500	-4.2870	-3.6670		
258 T	61.6200	3.3790	7.4830		
258 M	-8.4210	-0.3849	0.4987	-3.3690	-1.7640
258 B	-78.4600	-4.1490	-6.4860		
259 T	63.1400	2.8570	10.4800		
259 M	-6.9960	-0.4169	0.7055	-6.9800	-1.7770
259 B	-77.1300	-3.6910	-9.0720		
260 T	57.8100	1.9890	11.7300		
260 M	-5.1640	-0.4007	0.8730	-10.6700	-1.7010
260 B	-68.1400	-2.7900	-9.9850		
261 T	45.4500	1.2280	11.5500		
261 M	-3.1350	-0.3171	1.1010	-13.9100	-1.5410
261 B	-51.7200	-1.8630	-9.3450		
262 T	28.5200	0.8333	10.8700		
262 M	-1.0610	-0.2165	1.4490	-16.3300	-1.3100
262 B	-30.6400	-1.2660	-7.9730		

263 T	7.7360	0.6635	10.3000		
263 M	1.4840	-0.1572	1.9230	-18.1900	-0.9884
263 B	-4.7690	-0.9780	-6.4560		
264 T	-21.2200	0.1609	9.7130		
264 M	5.4450	-0.1214	2.5970	-19.6800	-0.6485
264 B	32.1100	-0.4037	-4.5190		
265 T	-58.9700	1.0300	10.4300		
265 M	11.9800	-0.0091	3.5790	-20.3800	0.5873
265 B	82.9400	-1.0480	-3.2690		
266 T	-105.9000	-9.6360	8.8250		
266 M	24.6700	1.6330	7.0360	-18.7500	1.4200
266 B	155.2000	12.9000	5.2470		
MAX	155.2000	21.4500		17.5900	8.1470
MIN	-117.2000	-21.4600		-26.2900	-4.7800
46 T	-4.6070	-49.4100	-22.8500		
46 M	-8.0380	-18.6500	-10.1800	-0.4607	15.9000
46 B	-11.4700	12.1100	2.4930		
47 T	-0.7076	-58.8300	-24.2600		
47 M	-6.2770	-27.7900	-15.0900	0.9971	17.8700
47 B	-11.8500	3.2480	-5.9240		
48 T	14.9100	-60.3300	-13.4600		
48 M	5.5530	-31.8700	-7.8330	2.1970	20.7600
48 B	-3.8040	-3.4010	-2.2060		
49 T	10.9400	-54.5500	-6.2830		
49 M	0.7772	-26.1600	-3.1660	0.3116	22.3400
49 B	-9.3810	2.2310	-0.0484		
50 T	21.3600	-50.5300	1.1440		
50 M	3.7170	-19.0300	-2.5070	-0.3035	21.1300
50 B	-13.9300	12.4800	-6.1580		
65 T	-2.8210	-23.9400	-21.3100		
65 M	-12.0800	-14.2300	-7.7770	-0.2765	11.5100
65 B	-21.3400	-4.5200	5.7540		
66 T	-10.4900	-21.8000	-24.9200		
66 M	-17.7400	-12.9000	-14.2600	-0.6604	12.3800
66 B	-24.9800	-3.9920	-3.5990		
67 T	-26.2900	-34.4600	-41.0100		
67 M	-26.1300	-40.5500	-35.2600	-1.6930	18.1000
67 B	-25.9600	-46.6400	-29.5000		
68 T	58.2900	-30.5800	-21.7700		
68 M	20.9800	-37.4700	-3.1750	-3.1130	20.1500
68 B	-16.3400	-44.3500	15.4200		
69 T	38.6100	-27.6300	3.2180		
69 M	7.7850	-16.0600	-1.4610	-0.8097	16.6000
69 B	-23.0400	-4.4850	-6.1390		
84 T	2.8280	-8.0230	-16.0200		
84 M	-11.6800	-10.4000	-3.5280	-0.0748	9.2630
84 B	-26.2000	-12.7800	8.9650		
85 T	-7.0370	-6.7990	-6.8480		
85 M	-17.3700	-11.4200	-2.0810	-1.9050	11.7900
85 B	-27.7100	-16.0500	2.6850		
86 T	-25.1800	-4.5540	14.7900		
86 M	-27.9700	10.3400	-2.3690	-3.5150	16.7600
86 B	-30.7700	25.2300	-19.5300		
87 T	65.0600	-0.6530	25.4800		
87 M	21.9000	7.6480	26.3800	-0.7103	14.9200
87 B	-21.2500	15.9500	27.2800		
88 T	50.6300	-11.9400	4.0210		
88 M	11.6500	-21.2600	0.0359	1.1610	12.1300
88 B	-27.3300	-30.5900	-3.9490		
103 T	11.5700	-2.0110	-12.7100		
103 M	-8.3490	-10.7300	-1.3730	0.8562	7.8560
103 B	-28.2700	-19.4400	9.9600		
104 T	12.7500	-2.0070	-4.9770		
104 M	-7.5230	-8.2400	-2.0280	0.2728	10.3600
104 B	-27.7900	-14.4700	0.9205		

RESULTS.XLS

105 T	25.1700	5.2840	-3.6600		
105 M	-4.4240	2.0040	-2.9470	1.4900	12.5500
105 B	-34.0200	-1.2760	-2.2350		
106 T	28.6200	12.0700	6.9630		
106 M	-5.4190	1.7540	9.0120	4.8230	10.9400
106 B	-39.4600	-8.5650	11.0600		
107 T	51.1500	9.1920	11.0300		
107 M	8.6010	-10.0200	7.8940	4.2410	10.6500
107 B	-33.9500	-29.2400	4.7600		
122 T	20.8100	2.9100	-12.0900		
122 M	-5.6070	-9.7020	-1.7930	2.2140	5.6960
122 B	-32.0300	-22.3100	8.5080		
123 T	24.2100	7.2500	-7.7770		
123 M	-5.6020	-6.4960	-2.4830	2.4160	7.1000
123 B	-35.4100	-20.2400	2.8100		
124 T	25.9900	13.1200	-2.6690		
124 M	-7.1570	-2.1840	-0.5102	3.5240	7.8000
124 B	-40.3100	-17.4900	1.6490		
125 T	33.6900	19.2700	5.0530		
125 M	-4.5960	-1.7310	3.9950	5.1280	7.3290
125 B	-42.8800	-22.7400	2.9380		
126 T	42.3700	23.3400	9.5010		
126 M	-2.2810	-5.7550	5.0860	6.0940	7.3490
126 B	-46.9300	-34.8500	0.6702		
MAX	65.0600	25.2300		6.0940	22.3400
MIN	-46.9300	-60.3300		-3.5150	5.6960
108 T	57.6300	2.8560	9.3610		
108 M	6.4300	-15.1000	0.1877	1.8250	15.7900
108 B	-44.7700	-33.0500	-8.9860		
109 T	58.5200	0.7947	21.6200		
109 M	5.9290	-12.5600	1.1590	-6.0110	19.3300
109 B	-46.6600	-25.9200	-19.3100		
110 T	47.9000	-0.4266	33.7800		
110 M	7.5300	-10.0900	1.3720	-15.1800	18.1800
110 B	-32.8400	-19.7600	-31.0400		
111 T	20.7300	-0.6148	41.4800		
111 M	6.8350	-7.5070	2.0260	-23.7200	13.0400
111 B	-7.0590	-14.4000	-37.4300		
112 T	-19.7500	-5.2170	40.8800		
112 M	8.2250	-5.2680	2.3880	-30.5100	4.0060
112 B	36.2000	-5.3190	-36.1000		
127 T	56.2100	24.6100	6.3990		
127 M	-0.9251	-11.5100	-0.5196	9.4710	15.9500
127 B	-58.0600	-47.6200	-7.4380		
128 T	77.9500	25.5900	14.0200		
128 M	6.3050	-13.0400	-1.3040	-0.3512	30.0400
128 B	-65.3400	-51.6700	-16.6300		
129 T	65.0300	26.8200	30.8800		
129 M	6.2660	-9.4220	0.1947	-24.8700	31.8000
129 B	-52.5000	-45.6600	-30.4900		
130 T	36.7800	20.2500	34.7700		
130 M	13.1900	-7.0110	-1.0100	-39.3200	18.2000
130 B	-10.3900	-34.2700	-36.7900		
131 T	-19.1400	2.1730	38.5700		
131 M	12.8600	-7.3460	2.7550	-39.1200	3.8890
131 B	44.8600	-16.8700	-33.0600		
146 T	44.3500	46.8800	13.0500		
146 M	-10.2100	-3.9720	2.8920	12.7700	2.6510
146 B	-64.7600	-54.8200	-7.2670		
147 T	56.8700	80.7200	-4.8320		
147 M	-23.3300	-11.6800	-15.6700	42.5700	63.9800
147 B	-103.5000	-104.1000	-26.5100		
148 T	142.9000	81.2800	-4.1740		
148 M	35.3600	-11.3800	-12.9500	-84.0300	68.1600
148 B	-72.2300	-104.0000	-21.7400		

149 T	48.9300	27.9500	30.6600		
149 M	22.8400	-11.9600	1.5590	-53.0300	5.8530
149 B	-3.2610	-51.8700	-27.5500		
150 T	-19.1500	10.1900	32.9000		
150 M	16.6500	-9.1220	5.4390	-45.2700	0.8401
150 B	52.4500	-28.4300	-22.0200		
165 T	48.5400	43.1200	34.9500		
165 M	-9.5590	-4.4120	8.0440	9.8050	-2.7380
165 B	-67.6600	-51.9400	-18.8700		
166 T	55.5300	44.5400	65.6100		
166 M	-21.7800	-5.8000	19.5800	34.0800	-45.2800
166 B	-99.0900	-56.1400	-26.4500		
167 T	130.4000	44.5700	37.7100		
167 M	31.6900	-4.9910	23.7800	-74.9300	-49.6700
167 B	-66.9800	-54.5500	9.8490		
168 T	43.3300	26.2200	24.8400		
168 M	20.3200	-11.0900	11.6100	-49.0600	-8.9680
168 B	-2.7020	-48.4000	-1.6270		
169 T	-23.3500	2.7120	25.3400		
169 M	15.5300	-8.4470	8.8230	-44.7900	-2.7570
169 B	54.4100	-19.6100	-7.6970		
184 T	63.5600	13.4400	38.2100		
184 M	-3.9320	-8.2910	8.9420	3.0480	-11.0900
184 B	-71.4200	-30.0200	-20.3300		
185 T	80.4900	5.6310	34.2200		
185 M	4.6570	-7.8890	7.5840	-10.9800	-15.3700
185 B	-71.1800	-21.4100	-19.0500		
186 T	55.2900	5.9180	19.1600		
186 M	0.5184	-4.6260	8.2250	-17.1300	-17.0000
186 B	-54.2600	-15.1700	-2.7110		
187 T	28.3300	8.6390	20.2300		
187 M	9.2350	-3.9210	12.4400	-34.2800	-14.4300
187 B	-9.8620	-16.4800	4.6440		
188 T	-24.2700	-3.2810	20.8500		
188 M	10.8700	-6.5380	10.5600	-37.3000	-4.5690
188 B	46.0100	-9.7950	0.2748		
203 T	69.3500	1.2800	26.8300		
203 M	-0.8400	-7.7740	5.1670	-5.8320	-2.0170
203 B	-71.0300	-16.8300	-16.4900		
204 T	65.3400	-1.8030	24.8300		
204 M	0.1862	-7.0780	5.8700	-11.7400	-3.7700
204 B	-64.9600	-12.3500	-13.0900		
205 T	51.2600	-3.6450	21.4500		
205 M	3.9480	-5.9660	6.9100	-18.8400	-3.5570
205 B	-43.3700	-8.2880	-7.6260		
206 T	19.6300	-5.0930	17.6800		
206 M	4.0610	-5.1600	7.5820	-23.5400	-1.8540
206 B	-11.5100	-5.2270	-2.5160		
207 T	-24.1900	-7.6320	19.4200		
207 M	7.0230	-4.8330	9.5440	-28.9000	1.5580
207 B	38.2400	-2.0340	-0.3325		
MAX	142.9000	81.2800		42.5700	68.1600
MIN	-103.5000	-104.1000		-84.0300	-49.6700

KAISER ENGINEERS HANFORD S/N:801854 08/29/95
PAGE 140 Run ID=BO65974 10:36:13
========== I M A G E S 3 D ==========
= Copyright (c) 1984 Celestial Software Inc. =
==========
Version 2.0 07/01/90

COMBINE RESULTS
Combined Plate Stresses

Load Combination Method
F[1,1]+F[1,2]+F[1,3]+F[1,4]+F[1,5]

Plate	Sigma-X	Sigma-Y	Tau-XY	Tau-XZ	Tau-YZ
1 T	-7.7790	-9.2480	-6.2500		
1 M	-1.5540	-2.3540	-1.4070	0.0097	0.1583
1 B	4.6720	4.5400	3.4360		
2 T	-6.9270	-23.9900	-10.5000		
2 M	-1.4280	-5.6650	-1.9240	-0.8441	2.0360
2 B	4.0720	12.6600	6.6550		
3 T	-7.5160	-38.7900	-13.4100		
3 M	-1.5910	-7.8860	-2.3220	-1.3440	5.8160
3 B	4.3340	23.0200	8.7640		
4 T	-8.7140	-55.1800	-14.5800		
4 M	-1.8310	-9.7760	-2.6520	-1.6510	9.8980
4 B	5.0510	35.6200	9.2770		
5 T	-10.3200	-71.5900	-14.4500		
5 M	-2.1180	-11.5200	-3.0100	-1.7300	13.7100
5 B	6.0870	48.5500	8.4300		
6 T	-12.0600	-86.8400	-13.4500		
6 M	-2.4020	-13.3100	-3.4250	-1.5920	16.9900
6 B	7.2560	60.2200	6.6030		
7 T	-13.5300	-100.1000	-11.8400		
7 M	-2.5540	-15.3500	-3.8270	-1.2570	19.7100
7 B	8.4180	69.4500	4.1860		
8 T	-14.1400	-110.1000	-9.4350		
8 M	-2.2630	-17.2200	-3.7290	-0.7914	21.8200
8 B	9.6090	75.7100	1.9780		
9 T	-14.4100	-115.8000	-6.7670		
9 M	-2.1450	-18.3100	-3.2280	-0.3658	23.2100
9 B	10.1200	79.2100	0.3116		
10 T	-13.8600	-117.9000	-3.8720		
10 M	-1.6590	-18.3900	-2.4160	-0.0119	23.9900
10 B	10.5400	81.1200	-0.9605		
11 T	-13.5200	-116.3000	0.2594		
11 M	-1.6990	-17.2500	-1.3730	0.4173	24.1700
11 B	10.1200	81.7700	-3.0050		
12 T	-12.3500	-109.4000	5.3790		
12 M	-1.4790	-14.9700	-0.4119	0.9197	23.1700
12 B	9.3950	79.4200	-6.2030		
13 T	-11.0700	-97.2600	10.0200		
13 M	-1.3650	-12.5300	0.1803	1.3530	20.5400
13 B	8.3390	72.2100	-9.6600		
14 T	-9.6900	-82.8900	13.4900		
14 M	-1.1030	-10.5100	0.5583	1.6060	16.9200
14 B	7.4830	61.8700	-12.3700		
15 T	-8.8350	-69.0300	15.4600		
15 M	-0.9548	-8.9850	0.8746	1.6410	13.1000
15 B	6.9250	51.0600	-13.7100		
16 T	-8.3610	-55.2300	16.0800		
16 M	-0.8689	-7.5390	1.1050	1.5100	9.0880
16 B	6.6230	40.1500	-13.8700		
17 T	-8.3080	-39.2500	14.8500		
17 M	-0.8214	-5.7540	1.2400	1.1930	4.4700
17 B	6.6650	27.7500	-12.3700		
18 T	-8.7720	-23.9000	11.5100		
18 M	-0.8529	-3.7790	1.2010	0.7416	0.5422

18 B	7.0660	16.3500	-9.1060		
19 T	-10.2600	-9.6140	7.4360		
19 M	-1.0780	-1.5200	1.0270	0.0898	-0.4243
19 B	8.1050	6.5730	-5.3820		
20 T	-19.1700	-7.9410	-10.7400		
20 M	-3.1430	-1.9080	-2.4170	1.3970	-0.7585
20 B	12.8800	4.1250	5.9090		
21 T	-12.8500	-17.3400	-14.1200		
21 M	-2.4110	-4.5630	-2.1720	-0.4140	0.0874
21 B	8.0260	8.2110	9.7740		
22 T	-9.2350	-27.6500	-17.7100		
22 M	-2.2500	-6.8650	-2.3510	-1.5810	3.6110
22 B	4.7350	13.9200	13.0000		
23 T	-7.0770	-38.6600	-19.0600		
23 M	-2.3800	-8.7340	-2.5630	-2.3600	7.3770
23 B	2.3180	21.1900	13.9300		
24 T	-6.1620	-49.7400	-18.6400		
24 M	-2.6810	-10.4000	-2.8470	-2.6990	10.8500
24 B	0.7988	28.9300	12.9400		
25 T	-6.1350	-60.1100	-17.0900		
25 M	-3.0530	-12.0800	-3.3040	-2.6000	13.8300
25 B	0.0295	35.9500	10.4800		
26 T	-6.2960	-69.2400	-14.9900		
26 M	-3.2180	-13.9800	-4.0440	-2.0690	16.2500
26 B	-0.1398	41.2900	6.8990		
27 T	-5.5170	-76.9400	-12.6000		
27 M	-2.6320	-16.7000	-4.8970	-1.1610	18.1400
27 B	0.2525	43.5500	2.8010		
28 T	-3.1370	-81.1900	-8.6900		
28 M	-0.7814	-18.5300	-4.0520	-0.2437	19.5500
28 B	1.5740	44.1300	0.5869		
29 T	-2.6610	-82.6400	-5.2640		
29 M	-0.7912	-19.0500	-3.1930	0.2914	20.4400
29 B	1.0780	44.5400	-1.1220		
30 T	-0.2772	-80.8600	0.4203		
30 M	0.1839	-17.6900	-1.5360	0.8444	20.6900
30 B	0.6450	45.4900	-3.4920		
31 T	0.1936	-75.3800	6.9820		
31 M	-0.3078	-14.7500	-0.4518	1.3780	19.7300
31 B	-0.8093	45.8900	-7.8860		
32 T	0.8006	-67.4100	12.8100		
32 M	-0.0512	-12.0900	-0.2036	1.8940	17.2300
32 B	-0.9030	43.2300	-13.2100		
33 T	-0.3436	-58.4200	17.8300		
33 M	0.0392	-10.2200	0.3050	2.0440	13.9500
33 B	0.4221	37.9800	-17.2200		
34 T	-2.6290	-49.4100	20.7400		
34 M	-0.0439	-8.6210	0.7465	1.7780	10.5000
34 B	2.5420	32.1700	-19.2500		
35 T	-6.0410	-40.3200	21.8300		
35 M	-0.2113	-7.0500	1.0590	1.2340	6.7900
35 B	5.6190	26.2200	-19.7100		
36 T	-11.5600	-29.5700	20.6000		
36 M	-0.5323	-5.1270	1.3210	0.3539	2.4070
36 B	10.4900	19.3200	-17.9600		
37 T	-18.4400	-18.6800	16.7900		
37 M	-1.0480	-3.0060	1.5260	-0.7147	-1.3270
37 B	16.3400	12.6700	-13.7400		
38 T	-26.3900	-9.2600	14.0800		
38 M	-1.8180	-1.1740	1.9160	-2.0500	-1.3130
38 B	22.7500	6.9110	-10.2500		
39 T	-30.6000	-8.1050	-14.5600		
39 M	-3.7910	-1.7150	-3.3010	4.5090	-1.4200
39 B	23.0200	4.6760	7.9580		
40 T	-19.6900	-13.5400	-18.6500		
40 M	-3.1620	-3.9220	-2.7590	2.5070	-1.4220
40 B	13.3600	5.6940	13.1300		

41 T	-11.6000	-19.7100	-22.6500		
41 M	-2.8150	-6.0190	-2.5470	1.0390	1.7590
41 B	5.9710	7.6690	17.5600		
42 T	-5.9520	-26.4700	-24.0900		
42 M	-2.8260	-7.8250	-2.5260	-0.0777	5.1770
42 B	0.2996	10.8200	19.0400		
43 T	-2.4350	-33.2200	-23.2400		
43 M	-3.1130	-9.3740	-2.6390	-0.8036	8.2680
43 B	-3.7910	14.4700	17.9600		
44 T	-0.6784	-39.4500	-20.9000		
44 M	-3.6320	-10.7500	-3.0030	-1.1160	10.8600
44 B	-6.5860	17.9400	14.8900		
45 T	-0.1633	-44.9200	-17.9900		
45 M	-4.3350	-12.2700	-3.9150	-1.0050	12.8600
45 B	-8.5080	20.3800	10.1600		
46 T	0.1849	-49.2700	-15.6400		
46 M	-4.8090	-14.0400	-5.7510	-0.4337	14.2900
46 B	-9.8040	21.1800	4.1400		
47 T	2.5710	-55.2200	-14.3700		
47 M	-3.8180	-19.4700	-8.5570	0.5525	15.6000
47 B	-10.2100	16.2800	-2.7380		
48 T	11.6900	-56.0500	-6.2840		
48 M	3.1020	-21.8700	-4.2230	1.3690	17.2600
48 B	-5.4910	12.3100	-2.1630		
49 T	9.0670	-52.0100	0.1287		
49 M	0.2372	-18.4700	-1.4010	0.3845	17.9200
49 B	-8.5920	15.0800	-2.9300		
50 T	14.5000	-48.2400	6.9480		
50 M	1.8890	-14.1500	-0.9287	0.1120	16.6300
50 B	-10.7200	19.9500	-8.8050		
51 T	12.5800	-45.0700	15.9000		
51 M	1.6680	-11.8500	-0.3774	0.1267	14.3400
51 B	-9.2490	21.3800	-16.6600		
52 T	9.1090	-40.0400	22.6200		
52 M	1.3410	-10.1000	0.4129	-0.5932	11.6600
52 B	-6.4280	19.8400	-21.7900		
53 T	3.7450	-34.8600	26.7700		
53 M	0.9686	-8.3640	0.9324	-1.6940	8.6590
53 B	-1.8080	18.1300	-24.9100		
54 T	-3.6600	-29.3900	28.6500		
54 M	0.5934	-6.7000	1.3460	-2.9470	5.2070
54 B	4.8470	15.9900	-25.9600		
55 T	-15.2000	-22.7600	27.6100		
55 M	0.0414	-4.6980	1.7680	-4.4660	0.9193
55 B	15.2800	13.3600	-24.0800		
56 T	-29.2300	-16.2200	23.3900		
56 M	-0.6570	-2.6640	2.2360	-5.9720	-2.7370
56 B	27.9100	10.8900	-18.9200		
57 T	-43.4700	-10.5500	19.8400		
57 M	-1.3760	-1.0200	2.7270	-7.4620	-1.9860
57 B	40.7200	8.5140	-14.3800		
58 T	-43.9500	-9.1360	-17.2800		
58 M	-4.0510	-1.6130	-4.0510	8.0630	-1.9860
58 B	35.8500	5.9110	9.1760		
59 T	-27.3700	-11.6500	-21.8800		
59 M	-3.4770	-3.5590	-3.3500	5.8440	-2.7010
59 B	20.4200	4.5290	15.1800		
60 T	-14.5600	-14.6800	-26.1600		
60 M	-3.1250	-5.4520	-2.8570	4.0600	0.1970
60 B	8.3110	3.7780	20.4500		
61 T	-5.1200	-18.1100	-27.4300		
61 M	-3.0660	-7.1200	-2.5480	2.5660	3.3150
61 B	-1.0130	3.8650	22.3300		
62 T	1.2320	-21.5100	-26.0900		
62 M	-3.3200	-8.5080	-2.4100	1.4170	6.0650
62 B	-7.8720	4.4930	21.2700		
63 T	4.9340	-24.5600	-22.9500		

63 M	-3.9170	-9.6350	-2.4900	0.6338	8.3160
63 B	-12.7700	5.2930	17.9700		
64 T	6.2510	-26.8500	-18.8600		
64 M	-5.0570	-10.3900	-2.9900	0.1674	9.9990
64 B	-16.3700	6.0620	12.8800		
65 T	5.0220	-28.4300	-15.2700		
65 M	-7.1160	-11.3300	-4.4210	-0.1044	11.0500
65 B	-19.2500	5.7780	6.4240		
66 T	0.7115	-27.4300	-14.9400		
66 M	-10.5000	-10.5900	-8.1470	-0.3883	11.6800
66 B	-21.7100	6.2490	-1.3530		
67 T	-8.6780	-34.8600	-22.3700		
67 M	-15.4900	-26.8500	-20.4300	-1.0390	15.0200
67 B	-22.2900	-18.8500	-18.4900		
68 T	40.5500	-32.2400	-8.4780		
68 M	12.1500	-24.9900	-1.4720	-1.9500	15.9900
68 B	-16.2600	-17.7300	5.5330		
69 T	27.7700	-29.7300	9.1190		
69 M	4.2830	-12.2600	-0.3648	-0.7488	13.3900
69 B	-19.2100	5.2070	-9.8480		
70 T	24.6200	-28.0900	17.4500		
70 M	3.3660	-12.0700	0.1462	-1.2700	12.2900
70 B	-17.8900	3.9490	-17.1600		
71 T	19.4000	-26.2400	25.3600		
71 M	2.4560	-9.9360	0.8132	-3.2790	10.6100
71 B	-14.4900	6.3710	-23.7300		
72 T	11.1700	-23.9000	30.8500		
72 M	2.0100	-8.2060	1.3540	-5.6120	8.0710
72 B	-7.1480	7.4840	-28.1400		
73 T	-0.7101	-21.1100	33.6800		
73 M	1.5340	-6.4500	1.8010	-7.9550	4.7050
73 B	3.7790	8.2120	-30.0800		
74 T	-19.2100	-17.8400	33.0200		
74 M	1.0120	-4.4710	2.3180	-10.4600	0.1944
74 B	21.2300	8.8990	-28.3800		
75 T	-41.6600	-14.9200	28.3400		
75 M	0.3479	-2.5160	2.9390	-12.6100	-3.7210
75 B	42.3600	9.8920	-22.4600		
76 T	-64.4600	-12.6300	24.1600		
76 M	-0.3591	-0.8850	3.5100	-14.3900	-2.5160
76 B	63.7400	10.8600	-17.1400		
77 T	-56.7100	-10.6500	-19.0900		
77 M	-4.0530	-1.5620	-4.6600	11.2600	-2.3810
77 B	48.6100	7.5230	9.7700		
78 T	-34.6600	-11.3400	-23.8300		
78 M	-3.5120	-3.3920	-3.8450	8.8070	-3.5920
78 B	27.6300	4.5570	16.1400		
79 T	-17.3600	-12.2800	-28.0700		
79 M	-3.1690	-5.1480	-3.1460	6.6700	-0.8937
79 B	11.0200	1.9810	21.7700		
80 T	-4.4740	-13.3900	-29.0300		
80 M	-3.0930	-6.6820	-2.6080	4.7880	1.9890
80 B	-1.7120	0.0219	23.8100		
81 T	4.4610	-14.4800	-27.2400		
81 M	-3.2940	-7.9450	-2.2320	3.2480	4.4560
81 B	-11.0500	-1.4090	22.7800		
82 T	10.0600	-15.3600	-23.5000		
82 M	-3.8200	-8.8660	-2.0160	2.0670	6.4430
82 B	-17.7000	-2.3760	19.4700		
83 T	12.6700	-15.8200	-18.3500		
83 M	-4.8500	-9.4520	-1.9130	1.1370	7.9780
83 B	-22.3700	-3.0840	14.5300		
84 T	11.7300	-15.0800	-12.4700		
84 M	-6.8550	-8.9820	-1.9830	0.1961	9.1990
84 B	-25.4400	-2.8810	8.5070		
85 T	6.2300	-14.5000	-4.4310		
85 M	-10.2700	-9.6230	-1.0390	-1.0920	10.8000

85 B	-26.7700	-4.7460	2.3540			
86 T	-4.5640	-13.1900	10.5000			
86 M	-16.5700	3.1820	-1.1340	-2.2080	13.7000	
86 B	-28.5700	19.5600	-12.7700			
87 T	47.7900	-10.7600	19.5600			
87 M	12.6900	1.6580	15.8700	-0.7987	12.4100	
87 B	-22.4200	14.0800	12.1800			
88 T	37.6600	-17.0700	10.0900			
88 M	6.5300	-15.2100	0.4883	-0.0538	10.3200	
88 B	-24.6000	-13.3600	-9.1170			
89 T	34.0400	-15.2100	17.5900			
89 M	3.5890	-10.9800	1.0280	-1.5700	11.5400	
89 B	-26.8700	-6.7440	-15.5300			
90 T	29.4100	-15.9900	25.9500			
90 M	3.2360	-9.9640	1.1860	-5.0770	11.0700	
90 B	-22.9400	-3.9370	-23.5800			
91 T	18.7600	-15.4000	32.7800			
91 M	2.6780	-8.0230	1.7030	-9.0410	9.0590	
91 B	-13.4100	-0.6478	-29.3800			
92 T	2.8080	-14.4100	36.5400			
92 M	2.5610	-6.2550	2.1040	-12.8300	5.5570	
92 B	2.3150	1.9050	-32.3300			
93 T	-22.7600	-13.9500	36.1200			
93 M	2.1440	-4.3930	2.6820	-16.4900	0.3797	
93 B	27.0500	5.1660	-30.7600			
94 T	-53.5700	-14.3500	31.2500			
94 M	1.7030	-2.5540	3.4890	-19.1900	-4.1660	
94 B	56.9800	9.2450	-24.2700			
95 T	-84.9800	-14.9800	26.9400			
95 M	0.9214	-0.8335	4.2690	-21.1900	-2.8240	
95 B	86.8200	13.3100	-18.4000			
96 T	-67.3000	-12.2600	-20.3600			
96 M	-3.9200	-1.5500	-5.1310	13.8300	-2.6160	
96 B	59.4600	9.1580	10.1000			
97 T	-40.5400	-12.0200	-24.9800			
97 M	-3.3810	-3.3590	-4.2200	11.1500	-4.1010	
97 B	33.7800	5.3040	16.5400			
98 T	-19.5500	-11.6600	-28.9300			
98 M	-3.0660	-5.0320	-3.3660	8.6520	-1.5170	
98 B	13.4100	1.5940	22.2000			
99 T	-3.9420	-11.2900	-29.5500			
99 M	-2.9910	-6.4640	-2.6710	6.4070	1.1730	
99 B	-2.0410	-1.6400	24.2000			
100 T	7.0040	-10.9200	-27.4400			
100 M	-3.1440	-7.6250	-2.1440	4.5550	3.4040	
100 B	-13.2900	-4.3280	23.1600			
101 T	14.1600	-10.5300	-23.3400			
101 M	-3.5250	-8.5050	-1.7260	3.0930	5.1860	
101 B	-21.2100	-6.4850	19.8800			
102 T	18.2000	-9.8850	-17.7300			
102 M	-4.1460	-8.9410	-1.3840	1.9030	6.6270	
102 B	-26.4900	-7.9980	14.9700			
103 T	19.5400	-9.1070	-10.6900			
103 M	-4.8970	-9.1040	-0.7569	0.8731	7.9840	
103 B	-29.3300	-9.1010	9.1730			
104 T	20.6000	-9.1720	-3.4080			
104 M	-4.4870	-7.6760	-1.0440	0.2102	9.5560	
104 B	-29.5800	-6.1790	1.3200			
105 T	27.7700	-4.9090	-0.3671			
105 M	-2.7300	-1.6440	-1.5070	0.6680	10.8200	
105 B	-33.2300	1.6220	-2.6470			
106 T	28.9200	-0.9072	8.7540			
106 M	-3.4100	-1.7320	5.6280	2.2710	9.7000	
106 B	-35.7400	-2.5560	2.5020			
107 T	40.2100	-2.5520	14.4200			
107 M	4.7050	-8.5270	5.0970	1.4270	9.1300	
107 B	-30.8000	-14.5000	-4.2250			

108 T	40.8400	-6.1850	16.1300			
108 M	3.2770	-11.3100	0.6980	-0.5864	11.5500	HNF-2465, Rev.0
108 B	-34.2900	-16.4300	-14.7300			
109 T	37.3600	-7.2840	25.1400			
109 M	2.8230	-9.5750	1.4050	-5.8290	12.8900	
109 B	-31.7200	-11.8700	-22.3300			
110 T	26.8100	-7.8710	33.1800			
110 M	3.6120	-7.8830	1.6600	-11.8200	11.4300	
110 B	-19.5900	-7.8950	-29.8600			
111 T	5.8460	-7.8060	37.8800			
111 M	3.0400	-6.1050	2.1850	-17.4600	7.5260	
111 B	0.2345	-4.4040	-33.5100			
112 T	-25.1600	-10.3100	36.7100			
112 M	3.6360	-4.4350	2.6050	-22.2100	1.0490	
112 B	32.4300	1.4400	-31.5000			
113 T	-62.8600	-14.5100	32.5900			
113 M	3.1570	-2.9050	4.0350	-24.8300	-4.4280	
113 B	69.1800	8.7030	-24.5300			
114 T	-102.2000	-17.2400	28.6700			
114 M	2.1370	-0.8613	5.0250	-26.8400	-2.9980	
114 B	106.4000	15.5100	-18.6200			
115 T	-80.3700	-14.6500	-22.0100			
115 M	-3.5920	-1.5920	-5.7160	17.1800	-2.7460	
115 B	73.1900	11.4700	10.5800			
116 T	-47.3600	-13.7600	-26.0700			
116 M	-3.0590	-3.4650	-4.6360	13.9900	-4.3430	
116 B	41.2400	6.8290	16.8000			
117 T	-21.8600	-12.1200	-29.3700			
117 M	-2.8100	-5.0340	-3.5860	10.8100	-1.8760	
117 B	16.2400	2.0520	22.2000			
118 T	-3.2270	-10.3400	-29.5100			
118 M	-2.7910	-6.3170	-2.7530	8.0540	0.4950	
118 B	-2.3560	-2.2890	24.0000			
119 T	9.9390	-8.6960	-27.1000			
119 M	-2.8910	-7.3750	-2.1080	5.8590	2.3870	
119 B	-15.7200	-6.0540	22.8800			
120 T	18.8900	-7.1750	-22.7600			
120 M	-3.1010	-8.1690	-1.5860	4.1250	3.8970	
120 B	-25.0900	-9.1640	19.5900			
121 T	24.5600	-5.6600	-16.9200			
121 M	-3.3520	-8.6300	-1.1460	2.7540	5.1500	
121 B	-31.2700	-11.6000	14.6300			
122 T	28.0500	-4.0920	-10.4400			
122 M	-3.3190	-8.4230	-1.0450	1.8010	6.2730	
122 B	-34.6900	-12.7500	8.3550			
123 T	30.5000	-1.5440	-5.1300			
123 M	-3.4000	-6.5660	-1.3480	1.4930	7.1830	
123 B	-37.3000	-11.5900	2.4350			
124 T	31.3800	1.8730	0.1731			
124 M	-4.3870	-4.0230	-0.1058	1.7990	7.5770	
124 B	-40.1600	-9.9180	-0.3847			
125 T	34.8700	5.3920	7.6330			
125 M	-2.9790	-3.6990	2.6520	2.2690	7.1520	
125 B	-40.8300	-12.7900	-2.3290			
126 T	37.6500	7.5910	13.5900			
126 M	-1.7510	-5.9410	3.4320	2.1880	6.8330	
126 B	-41.1500	-19.4700	-6.7250			
127 T	42.0500	8.0540	14.5400			
127 M	-1.1030	-9.1350	0.2873	3.4240	11.3800	
127 B	-44.2600	-26.3200	-13.9700			
128 T	50.1400	8.3020	20.9400			
128 M	2.9960	-9.8150	-0.0171	-3.1520	19.0300	
128 B	-44.1500	-27.9300	-20.9700			
129 T	37.4700	8.6900	31.8500			
129 M	2.8290	-7.4670	1.0140	-18.3400	19.3800	
129 B	-31.8100	-23.6200	-29.8200			
130 T	14.9900	4.5250	34.5200			

130 M	6.7530	-5.8170	0.4678	-27.6500	10.5900
130 B	-1.4800	-16.1600	-33.5800		
131 T	-26.6800	-6.4680	36.2600		
131 M	6.3590	-5.7210	2.9110	-28.6300	1.0930
131 B	39.4000	-4.9740	-30.4400		
132 T	-75.8700	-15.7500	32.4000		
132 M	5.1080	-3.6770	5.0950	-31.7400	-4.4340
132 B	86.0800	8.3990	-22.2100		
133 T	-121.4000	-20.6700	30.0400		
133 M	3.6110	-0.9949	6.2500	-34.1100	-3.1760
133 B	128.7000	18.6800	-17.5400		
134 T	-93.9800	-17.4300	-23.9900		
134 M	-3.1370	-1.7170	-6.3810	21.1600	-2.5920
134 B	87.7000	13.9900	11.2200		
135 T	-53.8600	-15.9900	-27.0100		
135 M	-2.5570	-3.7200	-4.9880	16.9400	-3.9890
135 B	48.7500	8.5550	17.0400		
136 T	-23.8300	-13.1300	-29.3800		
136 M	-2.5440	-5.1190	-3.7120	12.7400	-1.7700
136 B	18.7400	2.8880	21.9600		
137 T	-2.4560	-10.2300	-28.9900		
137 M	-2.5640	-6.2110	-2.8390	9.5000	0.0710
137 B	-2.6720	-2.1880	23.3100		
138 T	12.7900	-7.6090	-26.3700		
138 M	-2.6420	-7.1690	-2.1280	7.0040	1.5500
138 B	-18.0800	-6.7290	22.1200		
139 T	23.4300	-5.2770	-21.9200		
139 M	-2.7480	-7.8800	-1.5640	5.0330	2.7440
139 B	-28.9300	-10.4800	18.7900		
140 T	30.5700	-3.0100	-16.1000		
140 M	-2.8110	-8.1930	-1.2110	3.5160	3.7040
140 B	-36.2000	-13.3800	13.6800		
141 T	34.9400	-0.3264	-9.8350		
141 M	-2.9790	-7.6480	-1.1260	2.5460	4.4490
141 B	-40.9000	-14.9700	7.5820		
142 T	37.0400	2.6120	-3.9360		
142 M	-3.4910	-6.4580	-0.7069	2.1490	4.8830
142 B	-44.0200	-15.5300	2.5230		
143 T	38.3800	5.5010	1.4650		
143 M	-3.7880	-5.2710	0.1444	2.0640	4.9780
143 B	-45.9600	-16.0400	-1.1770		
144 T	39.4200	8.9980	8.7850		
144 M	-4.0390	-4.6830	1.7840	2.0670	4.6830
144 B	-47.5000	-18.3700	-5.2170		
145 T	39.9700	13.9300	16.6400		
145 M	-3.9680	-5.1020	3.0900	2.3010	4.4840
145 B	-47.9100	-24.1400	-10.4600		
146 T	37.1200	22.2800	18.4300		
146 M	-6.6240	-4.6500	2.2940	4.9350	3.3090
146 B	-50.3700	-31.5800	-13.8500		
147 T	39.1300	41.5100	9.8840		
147 M	-14.4800	-8.9860	-8.4500	21.5100	38.8800
147 B	-68.1000	-59.4800	-26.7800		
148 T	83.9800	41.1700	11.3600		
148 M	19.9100	-8.6140	-6.6860	-53.8800	40.7900
148 B	-44.1600	-58.3900	-24.7300		
149 T	21.9000	8.9060	32.2800		
149 M	12.4100	-8.7550	2.0310	-36.6600	3.4800
149 B	2.9150	-26.4200	-28.2200		
150 T	-28.2100	-1.8830	33.5100		
150 M	8.5920	-6.8200	4.5610	-33.5400	-0.2971
150 B	45.3900	-11.7600	-24.3900		
151 T	-62.7800	-35.9200	46.0600		
151 M	9.1400	-7.6170	1.9950	-35.9400	8.9690
151 B	81.0600	20.6900	-42.0700		
152 T	-148.7000	-22.8700	32.8700		
152 M	5.5820	-2.0400	8.7450	-45.9300	-0.8366

152 B	159.9000	18.7900	-15.3900		
153 T	-108.5000	-19.7100	-26.5300		
153 M	-2.1730	-2.1740	-7.1630	27.1700	-1.2500
153 B	104.2000	15.3700	12.2100		
154 T	-58.3400	-17.4400	-28.1600		
154 M	-2.1470	-4.3100	-4.9720	19.2700	-2.1810
154 B	54.0500	8.8230	18.2200		
155 T	-25.0700	-14.3200	-28.8000		
155 M	-2.2730	-5.1650	-3.8170	14.1900	-1.2520
155 B	20.5300	3.9920	21.1600		
156 T	-1.7360	-10.8300	-28.1100		
156 M	-2.3660	-6.1670	-2.8930	10.6500	-0.1223
156 B	-2.9970	-1.5050	22.3300		
157 T	15.3200	-7.9140	-25.4100		
157 M	-2.4780	-6.9930	-2.1620	7.9660	0.9043
157 B	-20.2800	-6.0720	21.0800		
158 T	27.5000	-5.3120	-20.9400		
158 M	-2.6190	-7.5810	-1.5970	5.7530	1.7590
158 B	-32.7400	-9.8510	17.7400		
159 T	35.6300	-2.7850	-15.0600		
159 M	-2.7980	-7.7310	-1.2280	4.0700	2.3550
159 B	-41.2300	-12.6800	12.6100		
160 T	40.5400	-0.0305	-8.5380		
160 M	-3.1260	-7.2910	-0.8939	2.9330	2.7440
160 B	-46.8000	-14.5500	6.7500		
161 T	43.0900	2.6330	-2.4170		
161 M	-3.5150	-6.5010	-0.3582	2.3020	2.9030
161 B	-50.1200	-15.6400	1.7000		
162 T	44.3600	4.9990	3.1470		
162 M	-3.8790	-5.7820	0.4198	1.9450	2.8550
162 B	-52.1200	-16.5600	-2.3070		
163 T	45.2100	8.1420	10.7900		
163 M	-4.1100	-5.2810	1.7530	1.6100	2.4960
163 B	-53.4300	-18.7000	-7.2860		
164 T	44.8400	12.5000	20.0500		
164 M	-4.5260	-5.2160	3.3640	1.5560	1.4740
164 B	-53.8900	-22.9300	-13.3200		
165 T	41.5400	20.7400	31.1400		
165 M	-6.3110	-4.8700	5.3100	2.8190	-0.0968
165 B	-54.1600	-30.4800	-20.5200		
166 T	39.7400	20.7700	51.1600		
166 M	-13.6200	-5.5130	12.2900	16.0300	-25.4700
166 B	-66.9800	-31.8000	-26.5900		
167 T	77.3800	19.9500	35.9000		
167 M	17.7300	-4.8680	14.9400	-49.1200	-28.4300
167 B	-41.9100	-29.6900	-6.0310		
168 T	18.6700	8.3510	28.9100		
168 M	10.9300	-8.2850	7.9660	-35.0700	-4.9100
168 B	3.1940	-24.9200	-12.9800		
169 T	-32.1600	-7.2780	29.2700		
169 M	7.9740	-6.5300	6.6010	-34.3300	-1.6950
169 B	48.1100	-5.7830	-16.0700		
170 T	-62.6800	-44.2400	45.4000		
170 M	9.2640	-8.2450	2.6080	-36.5700	12.5200
170 B	81.2100	27.7500	-40.1800		
171 T	-156.1000	-40.2900	46.5500		
171 M	5.9970	-6.8320	8.8780	-46.3800	12.9400
171 B	168.1000	26.6200	-28.7900		
172 T	-116.5000	-32.5800	-40.3500		
172 M	-0.8496	-6.1770	-7.1460	26.1100	8.3950
172 B	114.8000	20.2200	26.0600		
173 T	-73.0900	-20.0700	-29.9400		
173 M	-1.4800	-4.3350	-5.5240	21.2000	1.5420
173 B	70.1300	11.4000	18.8900		
174 T	-31.4800	-15.3200	-28.2500		
174 M	-1.7830	-5.2600	-4.0200	16.4600	-0.5483
174 B	27.9200	4.7970	20.2100		

175 T	-1.5860	-11.9500	-26.8900		
175 M	-2.1310	-6.0260	-2.9340	12.4300	-0.3411
175 B	-2.6760	-0.1066	21.0200		
176 T	18.6300	-9.3160	-23.9800		
176 M	-2.4130	-6.8130	-2.1120	9.2490	0.3539
176 B	-23.4600	-4.3100	19.7500		
177 T	31.9100	-6.9980	-19.2700		
177 M	-2.7090	-7.2100	-1.5470	6.8150	0.7544
177 B	-37.3300	-7.4230	16.1800		
178 T	40.9600	-4.7660	-13.4100		
178 M	-3.0280	-7.2820	-1.1050	4.7950	0.9233
178 B	-47.0200	-9.7980	11.2000		
179 T	46.5700	-2.5210	-6.9270		
179 M	-3.3900	-6.9910	-0.6358	3.2460	0.9565
179 B	-53.3500	-11.4600	5.6550		
180 T	49.5700	-0.5680	-0.8943		
180 M	-3.7200	-6.5540	-0.0562	2.1930	0.8775
180 B	-57.0200	-12.5400	0.7819		
181 T	51.1600	1.0610	4.5350		
181 M	-3.9390	-6.1680	0.6210	1.4330	0.7123
181 B	-59.0400	-13.4000	-3.2930		
182 T	52.1000	3.0650	12.1400		
182 M	-4.0560	-5.8990	1.7690	0.5057	0.2241
182 B	-60.2100	-14.8600	-8.5980		
183 T	52.1200	5.4060	22.1900		
183 M	-4.0230	-5.8510	3.4800	-0.6012	-0.9188
183 B	-60.1600	-17.1100	-15.2300		
184 T	52.5800	3.7110	32.5300		
184 M	-3.1070	-7.1120	5.7940	-1.7660	-5.3100
184 B	-58.7900	-17.9300	-20.9400		
185 T	56.0900	-1.6380	32.1400		
185 M	1.8720	-6.7380	5.1900	-11.2000	-7.9940
185 B	-52.3400	-11.8400	-21.7600		
186 T	34.3300	-2.2430	24.4900		
186 M	-0.6233	-4.6840	5.7560	-15.9300	-9.1070
186 B	-35.5700	-7.1250	-12.9800		
187 T	10.3900	-1.5490	25.9400		
187 M	4.4420	-4.1340	8.4380	-27.1900	-7.6930
187 B	-1.5060	-6.7190	-9.0600		
188 T	-32.4600	-9.7080	27.0300		
188 M	5.3310	-5.5390	7.6090	-30.5600	-1.8940
188 B	43.1300	-1.3710	-11.8100		
189 T	-83.9400	-20.2700	32.4100		
189 M	5.0470	-5.3120	7.6780	-32.5600	4.7030
189 B	94.0300	9.6480	-17.0500		
190 T	-138.6000	-36.8900	43.3100		
190 M	5.4800	-7.0600	8.0010	-32.2500	11.5500
190 B	149.6000	22.7700	-27.3100		
191 T	-105.9000	-28.7200	-32.3800		
191 M	0.9945	-6.0900	-6.2970	17.1300	8.2170
191 B	107.9000	16.5400	19.7600		
192 T	-80.6500	-19.9800	-29.9500		
192 M	-0.6985	-5.2580	-5.7390	21.8400	7.3540
192 B	79.2500	9.4670	18.4700		
193 T	-35.9500	-13.4800	-26.2300		
193 M	-1.4100	-5.1550	-3.9700	18.8800	5.1640
193 B	33.1300	3.1710	18.2900		
194 T	-0.9007	-10.3900	-24.2500		
194 M	-1.9790	-6.0540	-2.8030	14.7200	4.8920
194 B	-3.0570	-1.7150	18.6400		
195 T	21.5400	-8.1480	-20.9000		
195 M	-2.5040	-6.6210	-1.9470	11.3200	5.1110
195 B	-26.5500	-5.0930	17.0100		
196 T	35.2400	-8.5070	-16.6800		
196 M	-2.9490	-6.9240	-1.4060	8.5730	5.2810
196 B	-41.1300	-7.3410	13.8700		
197 T	44.7500	-4.8300	-11.3400		

197 M	-3.3650	-6.9650	-0.9456	5.9230	5.2420
197 B	-51.4800	-9.0990	9.4500		
198 T	50.7400	-3.3080	-5.5530		
198 M	-3.7360	-6.7890	-0.4608	3.6200	5.0500
198 B	-58.2100	-10.2700	4.6310		
199 T	54.0300	-2.0610	-0.2802		
199 M	-3.9890	-6.5410	0.0745	1.8800	4.8480
199 B	-62.0100	-11.0200	0.4292		
200 T	55.8300	-1.1200	4.3920		
200 M	-4.1090	-6.3550	0.6502	0.4456	4.6430
200 B	-64.0400	-11.5900	-3.0910		
201 T	57.1000	-0.1528	10.9100		
201 M	-3.9980	-6.2380	1.5730	-1.4580	4.1860
201 B	-65.0900	-12.3200	-7.7630		
202 T	58.0600	-0.2147	19.3300		
202 M	-3.3240	-6.6230	3.0070	-3.9610	2.9760
202 B	-64.7100	-13.0300	-13.3200		
203 T	57.6800	-2.3760	24.6500		
203 M	-1.3980	-6.7740	3.5060	-8.0150	1.5630
203 B	-60.4700	-11.1700	-17.6400		
204 T	48.5700	-4.7920	25.3300		
204 M	-0.8230	-6.2600	4.1080	-12.8200	0.4672
204 B	-50.2100	-7.7270	-17.1100		
205 T	33.1000	-6.4950	24.5800		
205 M	1.3780	-5.5040	4.9080	-18.1400	0.5533
205 B	-30.3400	-4.5130	-14.7600		
206 T	6.2670	-8.0590	23.2700		
206 M	1.4400	-4.9270	5.5100	-22.0000	1.5470
206 B	-3.3870	-1.7940	-12.2500		
207 T	-31.2500	-10.5000	24.9100		
207 M	3.1810	-4.6280	6.9360	-26.4000	3.5880
207 B	37.6100	1.2470	-11.0400		
208 T	-82.6100	-18.0200	29.4300		
208 M	4.2460	-5.2400	7.4570	-28.0800	7.9100
208 B	91.1100	7.5390	-14.5200		
209 T	-123.2000	-30.7800	34.7700		
209 M	5.0280	-6.5570	7.2850	-21.4500	10.0000
209 B	133.3000	17.6600	-20.1900		
MAX	168.1000	81.7700		27.1700	40.7900
MIN	-156.1000	-117.9000		-53.8800	-28.4300
210 T	-105.1000	-20.0300	-28.0000		
210 M	3.4980	0.0697	-7.7990	21.2000	3.5860
210 B	112.1000	20.1700	12.4100		
211 T	-68.5100	-12.6700	-37.3900		
211 M	1.7810	0.8421	-7.1930	21.4400	6.6830
211 B	72.0700	14.3500	23.0100		
212 T	-29.3100	-2.7280	-36.5100		
212 M	0.0951	0.5393	-5.3010	18.8700	7.0690
212 B	29.5000	3.8070	25.9100		
213 T	2.7830	2.7450	-32.8600		
213 M	-1.2820	-0.3068	-3.4910	14.8800	6.5890
213 B	-5.3460	-3.3590	25.8800		
214 T	23.8600	6.4780	-28.1700		
214 M	-2.3920	-0.8955	-2.3930	11.4900	6.6510
214 B	-28.6500	-8.2690	23.3800		
215 T	37.0900	9.2520	-22.2500		
215 M	-3.1840	-1.1730	-1.6760	8.6930	6.7870
215 B	-43.4600	-11.6000	18.9000		
216 T	46.2800	11.5700	-14.9400		
216 M	-3.8280	-1.2160	-1.0780	5.9400	6.8090
216 B	-53.9400	-14.0000	12.7800		
217 T	52.1400	13.4500	-6.9450		
217 M	-4.2930	-1.0700	-0.4624	3.5730	6.7240
217 B	-60.7300	-15.5900	6.0200		
218 T	55.4800	14.8300	0.3255		

218 M	-4.5340	-0.8824	0.1714	1.8180	6.5670
218 B	-64.5400	-16.5900	0.0173		
219 T	57.3700	15.7500	6.6880		
219 M	-4.5680	-0.7466	0.8072	0.2786	6.3350
219 B	-66.5000	-17.2500	-5.0730		
220 T	58.6400	16.1100	15.1500		
220 M	-4.2300	-0.7886	1.7850	-1.8650	5.7570
220 B	-67.0900	-17.6900	-11.5800		
221 T	58.9900	14.9600	24.5700		
221 M	-3.0850	-1.0100	2.8600	-4.9950	4.7130
221 B	-65.1600	-16.9800	-18.8500		
222 T	55.1900	11.7000	30.6000		
222 M	-1.6200	-1.0400	3.6450	-9.0250	3.6770
222 B	-58.4300	-13.7800	-23.3100		
223 T	45.4400	8.1440	32.4100		
223 M	0.1124	-0.5151	4.3640	-13.3700	3.1290
223 B	-45.2100	-9.1740	-23.6800		
224 T	29.2600	5.3530	32.3400		
224 M	1.2400	0.1671	5.3060	-17.2800	3.2960
224 B	-26.7900	-5.0180	-21.7300		
225 T	8.0020	2.7750	32.3500		
225 M	2.8600	0.7690	6.5100	-20.7400	4.2060
225 B	-2.2820	-1.2370	-19.3300		
226 T	-24.5300	-1.2220	34.0000		
226 M	4.4690	1.1630	8.1070	-24.1700	6.1480
226 B	33.4700	3.5480	-17.7800		
227 T	-66.6300	-11.2300	37.4000		
227 M	6.3490	1.1450	9.5340	-26.0400	7.7740
227 B	79.3300	13.5100	-18.3300		
228 T	-114.4000	-21.1200	29.8500		
228 M	7.9370	0.4028	9.7350	-23.9100	4.7700
228 B	130.2000	21.9200	-10.3800		
229 T	-122.8000	-14.7200	-20.5800		
229 M	6.1040	0.4989	-6.6760	22.3400	-0.4931
229 B	135.0000	15.7200	7.2270		
230 T	-68.4200	-1.2800	-25.2100		
230 M	4.0740	0.6054	-5.7360	15.3800	-1.8050
230 B	76.5700	2.4910	13.7400		
231 T	-26.5600	3.5540	-26.8400		
231 M	0.9862	-0.1009	-3.8170	11.9500	-1.4500
231 B	28.5400	-3.7550	19.2100		
232 T	5.6460	6.9140	-24.6000		
232 M	-1.4820	-0.4633	-2.4250	9.2240	-1.8560
232 B	-8.6090	-7.8410	19.7500		
233 T	28.0500	9.1640	-21.1400		
233 M	-3.0930	-0.7357	-1.5920	6.9000	-2.0870
233 B	-34.2300	-10.6400	17.9600		
234 T	42.4800	10.7600	-16.7000		
234 M	-4.1490	-0.8608	-1.0950	5.1100	-2.1610
234 B	-50.7800	-12.4900	14.5100		
235 T	52.7100	12.0600	-11.0900		
235 M	-4.9080	-0.8782	-0.6853	3.5120	-2.1600
235 B	-62.5300	-13.8200	9.7200		
236 T	59.3800	13.0100	-4.8590		
236 M	-5.3760	-0.8218	-0.2725	2.2490	-2.1180
236 B	-70.1300	-14.6600	4.3140		
237 T	63.2300	13.5900	0.8327		
237 M	-5.5530	-0.7545	0.1345	1.3640	-2.1540
237 B	-74.3300	-15.1000	-0.5636		
238 T	65.3100	13.8300	5.7000		
238 M	-5.5090	-0.7323	0.5241	0.5903	-2.2890
238 B	-76.3200	-15.2900	-4.6520		
239 T	66.0900	13.5200	11.7700		
239 M	-5.0720	-0.7689	1.0250	-0.6343	-2.5620
239 B	-76.2300	-15.0600	-9.7200		
240 T	64.3800	12.3000	18.0700		
240 M	-4.1500	-0.8472	1.5860	-2.6610	-2.9450

240 B	-72.6800	-14.0000	-14.9000		
241 T	57.1000	10.2400	21.9000		
241 M	-2.7660	-0.7941	2.0560	-5.3480	-3.2230
241 B	-62.6300	-11.8300	-17.7900		
242 T	44.0600	8.2020	23.3200		
242 M	-1.3240	-0.5574	2.6150	-8.2420	-3.2480
242 B	-46.7100	-9.3170	-18.0900		
243 T	27.3000	6.7190	23.4900		
243 M	0.1955	-0.2525	3.3130	-10.7900	-2.9760
243 B	-26.9100	-7.2250	-16.8700		
244 T	6.4550	5.3950	23.5400		
244 M	1.7740	0.0125	4.1980	-13.0700	-2.3840
244 B	-2.9080	-5.3700	-15.1400		
245 T	-22.8500	3.2900	24.2600		
245 M	4.1840	0.1602	5.4910	-15.2200	-1.4160
245 B	31.2200	-2.9700	-13.2800		
246 T	-63.0700	0.5684	23.7800		
246 M	7.4830	0.8924	7.4040	-17.4000	-1.1500
246 B	78.0300	1.2170	-8.9700		
247 T	-127.5000	-14.3100	21.1000		
247 M	9.9040	0.8779	8.4510	-23.6100	0.0194
247 B	147.3000	16.0700	-4.2000		
248 T	-118.1000	-11.5000	-10.4700		
248 M	13.2200	0.8826	-4.3430	23.0700	1.2010
248 B	144.5000	13.2700	1.7830		
249 T	-69.1300	0.0739	-15.2800		
249 M	5.9090	0.0509	-2.3680	22.5700	0.0661
249 B	80.9500	0.0278	10.5500		
250 T	-27.4600	0.8082	-15.8900		
250 M	0.7976	-0.1676	-1.4310	20.1900	-0.9503
250 B	29.0600	-1.1430	13.0300		
251 T	4.8770	2.0160	-14.9300		
251 M	-2.4600	-0.2529	-0.8762	17.1000	-1.2180
251 B	-9.7970	-2.5220	13.1700		
252 T	27.6100	2.6770	-12.8500		
252 M	-4.4300	-0.3096	-0.5565	13.8300	-1.4660
252 B	-36.4700	-3.2970	11.7400		
253 T	42.5500	3.1070	-10.1200		
253 M	-5.6280	-0.3306	-0.3818	10.5800	-1.6230
253 B	-53.8100	-3.7680	9.3550		
254 T	53.2700	3.5180	-6.7200		
254 M	-6.4750	-0.3363	-0.2428	7.1880	-1.7130
254 B	-66.2200	-4.1910	6.2350		
255 T	60.3500	3.8190	-2.9640		
255 M	-6.9840	-0.3232	-0.0991	3.9060	-1.7790
255 B	-74.3100	-4.4650	2.7660		
256 T	64.3700	3.9580	0.4130		
256 M	-7.1670	-0.3106	0.0431	1.1510	-1.8260
256 B	-78.7100	-4.5800	-0.3269		
257 T	66.4300	3.9770	3.2550		
257 M	-7.1130	-0.3092	0.1673	-1.1600	-1.8600
257 B	-80.6500	-4.5960	-2.9200		
258 T	66.8200	3.8190	6.7680		
258 M	-6.7310	-0.3211	0.3306	-4.2700	-1.8790
258 B	-80.2800	-4.4610	-6.1070		
259 T	63.9800	3.4090	10.3800		
259 M	-5.9240	-0.3354	0.4885	-8.2240	-1.8600
259 B	-75.8300	-4.0790	-9.4010		
260 T	55.0200	2.7230	12.7000		
260 M	-4.7800	-0.3167	0.6385	-12.1300	-1.7750
260 B	-64.5800	-3.3560	-11.4200		
261 T	40.7300	2.0760	13.8000		
261 M	-3.4220	-0.2566	0.8367	-15.5300	-1.6310
261 B	-47.5700	-2.5900	-12.1300		
262 T	23.4900	1.6740	14.2000		
262 M	-1.9630	-0.1875	1.1110	-18.1200	-1.4330
262 B	-27.4200	-2.0490	-11.9800		

263 T	3.1950	1.4050	14.4300		
263 M	-0.1369	-0.1469	1.4680	-20.2100	-1.1710
263 B	-3.4690	-1.6980	-11.4900		
264 T	-25.1800	0.6660	14.2600		
264 M	2.7480	-0.1187	1.9730	-22.1900	-0.9293
264 B	30.6700	-0.9034	-10.3200		
265 T	-64.3500	1.5720	14.5900		
265 M	7.5620	-0.0060	2.7340	-23.8600	0.1339
265 B	79.4700	-1.5840	-9.1180		
266 T	-121.0000	-11.0200	10.6300		
266 M	16.9800	1.1130	5.3020	-23.8100	1.2960
266 B	155.0000	13.2400	-0.0309		
MAX	155.0000	21.9200		23.0700	7.7740
MIN	-127.5000	-21.1200		-26.0400	-3.2480
46 T	0.1849	-49.2700	-15.6400		
46 M	-4.8090	-14.0400	-5.7510	-0.4337	14.2900
46 B	-9.8040	21.1800	4.1400		
47 T	2.5710	-55.2200	-14.3700		
47 M	-3.8180	-19.4700	-8.5570	0.5525	15.6000
47 B	-10.2100	16.2800	-2.7380		
48 T	11.6900	-56.0500	-6.2840		
48 M	3.1020	-21.8700	-4.2230	1.3690	17.2600
48 B	-5.4910	12.3100	-2.1630		
49 T	9.0670	-52.0100	0.1287		
49 M	0.2372	-18.4700	-1.4010	0.3845	17.9200
49 B	-8.5920	15.0800	-2.9300		
50 T	14.5000	-48.2400	6.9480		
50 M	1.8890	-14.1500	-0.9287	0.1120	16.6300
50 B	-10.7200	19.9500	-8.8050		
65 T	5.0220	-28.4300	-15.2700		
65 M	-7.1160	-11.3300	-4.4210	-0.1044	11.0500
65 B	-19.2500	5.7780	6.4240		
66 T	0.7115	-27.4300	-14.9400		
66 M	-10.5000	-10.5900	-8.1470	-0.3883	11.6800
66 B	-21.7100	6.2490	-1.3530		
67 T	-8.6780	-34.8600	-22.3700		
67 M	-15.4900	-26.8500	-20.4300	-1.0390	15.0200
67 B	-22.2900	-18.8500	-18.4900		
68 T	40.5500	-32.2400	-8.4780		
68 M	12.1500	-24.9900	-1.4720	-1.9500	15.9900
68 B	-16.2600	-17.7300	5.5330		
69 T	27.7700	-29.7300	9.1190		
69 M	4.2830	-12.2600	-0.3648	-0.7488	13.3900
69 B	-19.2100	5.2070	-9.8480		
84 T	11.7300	-15.0800	-12.4700		
84 M	-6.8550	-8.9820	-1.9830	0.1961	9.1990
84 B	-25.4400	-2.8810	8.5070		
85 T	6.2300	-14.5000	-4.4310		
85 M	-10.2700	-9.6230	-1.0390	-1.0920	10.8000
85 B	-26.7700	-4.7460	2.3540		
86 T	-4.5640	-13.1900	10.5000		
86 M	-16.5700	3.1820	-1.1340	-2.2080	13.7000
86 B	-28.5700	19.5600	-12.7700		
87 T	47.7900	-10.7600	19.5600		
87 M	12.6900	1.6580	15.8700	-0.7987	12.4100
87 B	-22.4200	14.0800	12.1800		
88 T	37.6600	-17.0700	10.0900		
88 M	6.5300	-15.2100	0.4883	-0.0538	10.3200
88 B	-24.6000	-13.3600	-9.1170		
103 T	19.5400	-9.1070	-10.6900		
103 M	-4.8970	-9.1040	-0.7569	0.8731	7.9840
103 B	-29.3300	-9.1010	9.1730		
104 T	20.6000	-9.1720	-3.4080		
104 M	-4.4870	-7.6760	-1.0440	0.2102	9.5560
104 B	-29.5800	-6.1790	1.3200		

105 T	27.7700	-4.9090	-0.3671		
105 M	-2.7300	-1.6440	-1.5070	0.6680	10.8200
105 B	-33.2300	1.6220	-2.6470		
106 T	28.9200	-0.9072	8.7540		
106 M	-3.4100	-1.7320	5.6280	2.2710	9.7000
106 B	-35.7400	-2.5560	2.5020		
107 T	40.2100	-2.5520	14.4200		
107 M	4.7050	-8.5270	5.0970	1.4270	9.1300
107 B	-30.8000	-14.5000	-4.2250		
122 T	28.0500	-4.0920	-10.4400		
122 M	-3.3190	-8.4230	-1.0450	1.8010	6.2730
122 B	-34.6900	-12.7500	8.3550		
123 T	30.5000	-1.5440	-5.1300		
123 M	-3.4000	-6.5660	-1.3480	1.4930	7.1830
123 B	-37.3000	-11.5900	2.4350		
124 T	31.3800	1.8730	0.1731		
124 M	-4.3870	-4.0230	-0.1058	1.7990	7.5770
124 B	-40.1600	-9.9180	-0.3847		
125 T	34.8700	5.3920	7.6330		
125 M	-2.9790	-3.6990	2.6520	2.2690	7.1520
125 B	-40.8300	-12.7900	-2.3290		
126 T	37.6500	7.5910	13.5900		
126 M	-1.7510	-5.9410	3.4320	2.1880	6.8330
126 B	-41.1500	-19.4700	-6.7250		
MAX	47.7900	21.1800		2.2710	17.9200
MIN	-41.1500	-56.0500		-2.2080	6.2730
108 T	40.8400	-6.1850	16.1300		
108 M	3.2770	-11.3100	0.6980	-0.5864	11.5500
108 B	-34.2900	-16.4300	-14.7300		
109 T	37.3600	-7.2840	25.1400		
109 M	2.8230	-9.5750	1.4050	-5.8290	12.8900
109 B	-31.7200	-11.8700	-22.3300		
110 T	26.8100	-7.8710	33.1800		
110 M	3.6120	-7.8830	1.6600	-11.8200	11.4300
110 B	-19.5900	-7.8950	-29.8600		
111 T	5.8460	-7.8060	37.8800		
111 M	3.0400	-6.1050	2.1850	-17.4600	7.5260
111 B	0.2345	-4.4040	-33.5100		
112 T	-25.1600	-10.3100	36.7100		
112 M	3.6360	-4.4350	2.6050	-22.2100	1.0490
112 B	32.4300	1.4400	-31.5000		
127 T	42.0500	8.0540	14.5400		
127 M	-1.1030	-9.1350	0.2873	3.4240	11.3800
127 B	-44.2600	-26.3200	-13.9700		
128 T	50.1400	8.3020	20.9400		
128 M	2.9960	-9.8150	-0.0171	-3.1520	19.0300
128 B	-44.1500	-27.9300	-20.9700		
129 T	37.4700	8.6900	31.8500		
129 M	2.8290	-7.4670	1.0140	-18.3400	19.3800
129 B	-31.8100	-23.6200	-29.8200		
130 T	14.9900	4.5250	34.5200		
130 M	6.7530	-5.8170	0.4678	-27.6500	10.5900
130 B	-1.4800	-16.1600	-33.5800		
131 T	-26.6800	-6.4680	36.2600		
131 M	6.3590	-5.7210	2.9110	-28.6300	1.0930
131 B	39.4000	-4.9740	-30.4400		
146 T	37.1200	22.2800	18.4300		
146 M	-6.6240	-4.6500	2.2940	4.9350	3.3090
146 B	-50.3700	-31.5800	-13.8500		
147 T	39.1300	41.5100	9.8840		
147 M	-14.4800	-8.9860	-8.4500	21.5100	38.8800
147 B	-68.1000	-59.4800	-26.7800		
148 T	83.9800	41.1700	11.3600		
148 M	19.9100	-8.6140	-6.6860	-53.8800	40.7900
148 B	-44.1600	-58.3900	-24.7300		

149 T	21.9000	8.9060	32.2800		
149 M	12.4100	-8.7550	2.0310	-36.6600	3.4800
149 B	2.9150	-26.4200	-28.2200		
150 T	-28.2100	-1.8830	33.5100		
150 M	8.5920	-6.8200	4.5610	-33.5400	-0.2971
150 B	45.3900	-11.7600	-24.3900		
165 T	41.5400	20.7400	31.1400		
165 M	-6.3110	-4.8700	5.3100	2.8190	-0.0968
165 B	-54.1600	-30.4800	-20.5200		
166 T	39.7400	20.7700	51.1600		
166 M	-13.6200	-5.5130	12.2900	16.0300	-25.4700
166 B	-66.9800	-31.8000	-26.5900		
167 T	77.3800	19.9500	35.9000		
167 M	17.7300	-4.8680	14.9400	-49.1200	-28.4300
167 B	-41.9100	-29.6900	-6.0310		
168 T	18.6700	8.3510	28.9100		
168 M	10.9300	-8.2850	7.9660	-35.0700	-4.9100
168 B	3.1940	-24.9200	-12.9800		
169 T	-32.1600	-7.2780	29.2700		
169 M	7.9740	-6.5300	6.6010	-34.3300	-1.6950
169 B	48.1100	-5.7830	-16.0700		
184 T	52.5800	3.7110	32.5300		
184 M	-3.1070	-7.1120	5.7940	-1.7660	-5.3100
184 B	-58.7900	-17.9300	-20.9400		
185 T	56.0900	-1.6380	32.1400		
185 M	1.8720	-6.7380	5.1900	-11.2000	-7.9940
185 B	-52.3400	-11.8400	-21.7600		
186 T	34.3300	-2.2430	24.4900		
186 M	-0.6233	-4.6840	5.7560	-15.9300	-9.1070
186 B	-35.5700	-7.1250	-12.9800		
187 T	10.3900	-1.5490	25.9400		
187 M	4.4420	-4.1340	8.4380	-27.1900	-7.6930
187 B	-1.5060	-6.7190	-9.0600		
188 T	-32.4600	-9.7080	27.0300		
188 M	5.3310	-5.5390	7.6090	-30.5600	-1.8940
188 B	43.1300	-1.3710	-11.8100		
203 T	57.6800	-2.3760	24.6500		
203 M	-1.3980	-6.7740	3.5060	-8.0150	1.5630
203 B	-60.4700	-11.1700	-17.6400		
204 T	48.5700	-4.7920	25.3300		
204 M	-0.8230	-6.2600	4.1080	-12.8200	0.4672
204 B	-50.2100	-7.7270	-17.1100		
205 T	33.1000	-6.4950	24.5800		
205 M	1.3780	-5.5040	4.9080	-18.1400	0.5533
205 B	-30.3400	-4.5130	-14.7600		
206 T	6.2670	-8.0590	23.2700		
206 M	1.4400	-4.9270	5.5100	-22.0000	1.5470
206 B	-3.3870	-1.7940	-12.2500		
207 T	-31.2500	-10.5000	24.9100		
207 M	3.1810	-4.6280	6.9360	-26.4000	3.5880
207 B	37.6100	1.2470	-11.0400		
MAX	83.9800	41.5100		21.5100	40.7900
MIN	-68.1000	-59.4800		-53.8800	-28.4300

Attachment 4.

Load Data sheets for the nozzle load - preliminary and final | ⚠ 10/14/96

Load Data sheets for jumper connections - preliminary and final | ⚠ 10/14/96

Total 4 pages.

CALC W320-24-011
ATTMT 4 p. 10F4

ICF KAISER
HANFORD COMPANY

DESIGN ANALYSIS

Calc. No. W-320-27-013
Revision No. 1
Page No. 69 of 69

Client	WESTINGHOUSE HANFORD CO.	WO/Job No.	ER4319	Filename	ANCOR-SL.xls
Subject	PROCESS PIPE STRESS ANALYSIS	Date	8 / 4 / 1995	By	D. L. STONE
PROJECT W-320 WASTE RETRIEVAL for TANK 241-C-106		Checked		By	
Location	C TANK FARM 200 EAST AREA	Revised		By	

ANCHOR LOADS AT PIT WALLS

Nozzle: 17 Location: 241-C-06A Pump Pit	Pipe Loads	Pipe Length (*2) (in.)	Friction Force (*3) (lb/in)	Fx (lbs)	Fy (lbs)	Fz (lbs)	Mx (in-lb)	My (in-lb)	Mz (in-lb)
	Inner Pipe								
Identification: W-320 Pump Pit Slurry Line Nozzle	(Seismic)			63	0	72	0	2004	0
	(Thermal) (*1)			986	142	-545	2412	-15252	-4848
Node #: A00	**Encasement**								
Orientation: (Elevation View)	(Seismic) (*4)	L = 207	F1 = 24.48	5064.42					
	(Thermal) (*5)	L = 207	F2 = 23.18	4795.48					
	Absolute Sum			10909	142	617	2412	17256	4848

Nozzle: U-11 Location: 241-AY-02A Pump Pit	Pipe Loads	Pipe Length (*2) (in.)	Friction Force (*3) (lb/in)	Fx (lbs)	Fy (lbs)	Fz (lbs)	Mx (in-lb)	My (in-lb)	Mz (in-lb)
	Inner Pipe								
Identification: W-320 AY Slurry Line Nozzle	(Seismic)			0	0	0	0	0	0
	(Thermal) (*1)			-452	-46	236	-24	-1776	-480
Node #: A171	**Encasement**								
Orientation: (Elevation View)	(Seismic) (*4)	L = 108	F1 = -24.48	-2643.84					
	(Thermal) (*5)	L = 108	F2 = -23.18	-2503.44					
	Absolute Sum			5599	46	236	24	1776	480

(*1) (Ref. Appendix A, Autopipe Filename: TRAN-SL)
(*2) L = Length of pipe immediately preceding anchor as per DWGS # ES-320-M3 and # ES-320-M6: (Ref. Appendix D)
(*3) For underground pipe:
(For SEISMIC: Ref. Calculation W320-27-014, Appendix. A, Page 5 , Soil Friction)
(For THERMAL: Ref. Calculation W320-27-014, Appendix. B, Page 5 , Static Soil Friction)
(*4) LOAD = F1 x L
(*5) LOAD = F2 x L

ICF KAISER
HANFORD COMPANY

DESIGN ANALYSIS

Calc. No. W-320-27-013
Revision No. 2
Page No. 71 of 72

Client	WESTINGHOUSE HANFORD CO.	WO/Job No.	ER4319	Filename	ANCOR-SL.xls
Subject	PROCESS PIPE STRESS ANALYSIS	Date	9/3/1996	By	D. L. STONE
PROJECT W-320 WASTE RETRIEVAL for TANK 241-C-106		Checked	9/25/96	By	
Location	C TANK FARM 200 EAST AREA	Revised		By	

ANCHOR LOADS AT PIT WALLS

Nozzle: 17 Location: 241-C-06A Pump Pit	Pipe Loads	Pipe Length (*2) (in.)	Friction Force (*3) (lb/in)	Fx (lbs)	Fy (lbs)	Fz (lbs)	Mx (in-lb)	My (in-lb)	Mz (in-lb)
	Inner Pipe								
Identification: W-320 Pump Pit Slurry Line Nozzle	(Seismic)			57	0	74	0	876	0
	(Thermal)			990	156	-564	2676	-15804	-5244
	(*1)								
Node #: A00	**Encasement**								
Orientation: 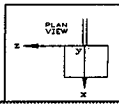	(Seismic) (*4)	L = 217	F1 = 24.48	5305.31					
	(Thermal) (*5)	L = 217	F2 = 23.18	5023.57					
	Absolute Sum			11376	156	638	2676	16680	5244

Nozzle: U-11 Location: 241-AY-02A Pump Pit	Pipe Loads	Pipe Length (*2) (in.)	Friction Force (*3) (lb/in)	Fx (lbs)	Fy (lbs)	Fz (lbs)	Mx (in-lb)	My (in-lb)	Mz (in-lb)
	Inner Pipe								
Identification: W-320 AY Slurry Line Nozzle	(Seismic)			0	0	0	0	0	0
	(Thermal)			-536	-78	305	-108	-12720	-1344
	(*1)								
Node #: A171	**Encasement**								
Orientation: 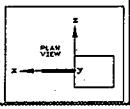	(Seismic) (*4)	L = 138	F1 = -24.48	-3378.24					
	(Thermal) (*5)	L = 138	F2 = -23.18	-3198.84					
	Absolute Sum			7113	78	305	108	12720	1344

(*1) (Ref. Appendix A, Autopipe Filename: TRAN-SL)
(*2) L = Length of pipe immediately preceding anchor as per DWGS # ES-320-M3 and # ES-320-M6: (Ref. Appendix D)
(*3) For underground pipe:
(For SEISMIC: Ref. Calculation W320-27-014, Appendix. A, Page 5 , Soil Friction)
(For THERMAL: Ref. Calculation W320-27-014, Appendix. B, Page 5 , Static Soil Friction)
(*4) LOAD=F1 x L
(*5) LOAD=F2 x L

CALC W320-24-011
ATTMT 4 p. 2 OF 4

ICF KAISER
HANFORD COMPANY

DESIGN ANALYSIS

Calc. No. W-320-27-016
Revision No: 0
Page No. 7 of 8

Client WESTINGHOUSE HANFORD CO.
Subject C AT FARM JUMPER STRESS ANALYSIS
PROJECT W-320 WASTE RETRIEVAL for TANK 241-C-106
Location C TANK FARM 200 EAST AREA

WO/Job N ER4319
Date 9/11/95
Checked 9/11/95
Revised

Filename U9.xls:2
By M. M. AHMED
By M. K. PAL
By

ANCHOR LOADS AT PIT WALLS

NOTE: THESE ARE THE JUMPER PIPING LOADS EXERTED ON PIT WALL FROM INSIDE THE PIT. DOES NOT INCLUDE THE TRANSFER . PIPE LINE LOADS FROM OUT SIDE THE PIT.

(Inside Pit)	Jumper Loads	Fx (lbs)	Fy (lbs)	Fz (lbs)	Mx (in-lb)	My (in-lb)	Mz (in-lb)
Identification: Jumper U9-A g:H-2-818505	(Seismic) (*1)	177	121	172	1924	2628	1797
AutoPipe File: MA-C06A Node #: A00 Orientation:	(Thermal) (*2)	387	255	583	4482	1032	2878
	(*3) ABSOLUTE SUM	564	376	755	6406	3660	4875

NOTES:

(*1): SEISMIC LOADS COULD BE POSITIVE OR NEGATIVE.

(*2): THERMAL LOADS SPECIFIED ARE THE ALGEBRIC SUM OF GRAVITY AND THERMAL LOADS.

(*3): ABSOLUTE SUM IS THE TOTAL OF THERMAL AND SEISMIC DISREGARDING THE SIGNS.

ICF KAISER
HANFORD COMPANY

DESIGN ANALYSIS

Calc. No. W-320-27-016
Revision No: 0
Page No. 7 of 9

Client	WESTINGHOUSE HANFORD CO.	WO/Job N	ER4319	Filename	U9.xls:2
Subject	AY FARM JUMPER STRESS ANALYSIS	Date	9/11/95	By	M. M. AHMED
PROJECT W-320 WASTE RETRIEVAL for TANK 241-C-106		Checked	9/11/95	By	M. K. PAL
Location	C TANK FARM 200 EAST AREA	Revised		By	

REV-1: BY: M. Ahmed 6.28.96
CHECKED BY: D. L Stone 7-1-96

ANCHOR LOADS AT PIT WALLS

NOTE: THESE ARE THE JUMPER PIPING LOADS EXERTED ON PIT WALL FROM INSIDE THE PIT. DOES NOT INCLUDE THE TRANSFER . PIPE LINE LOADS FROM OUT SIDE THE PIT.

(Inside Pit) JUMPER LOADS		Fx (lbe)	Fy (lbe)	Fz (lbe)	Mx (in-lb)	My (in-lb)	Mz (in-lb)
Identification: Dwg:H-2-818505	(Seismic) (*1)	132	128	295	1548	2352	948
AutoPipe File: MA-C06A Node #: A00 Orientation: 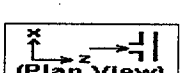	(Thermal) (*2)	23	321	233	3192	24	468
(*3) ABSOLUTE SUM		155	449	528	4740	2376	1416

Need to # pages

ATTACHMENT 4
page 3 OF 4

MRE

ICF KAISER
HANFORD COMPANY

DESIGN ANALYSIS

Calc. No. W-320-27-016
Revision No. 0
Page No. of

Client	WESTINGHOUSE HANFORD CO.	WO/Job No.	ER4319	Filename	U9-A-B.XLS
Subject	AY FARM JUMPER STRESS ANALYSIS	Date	8/11/95	By	RS ULBRICHT
PROJECT W-320 WASTE RETRIEVAL for TANK 241-C-106		Checked		By	
Location	C TANK FARM 200 EAST AREA	Revised		By	

ANCHOR LOADS AT PIT WALLS

(Inside Pit)	Jumper Loads			Fx (lbs)	Fy (lbs)	Fz (lbs)	Mx (in-lb)	My (in-lb)	Mz (in-lb)
Identification: Jumper U9-A-B	(Seismic) (*1)			480	72	392	5232	408	192
Dwg. H-2-818503	(Thermal)			493	275	372	4704	468	912
Node #: A00	(*1)								
Orientation: (Plan View)									
	Absolute Sum			973	347	764	9936	876	1104

PRELIMINARY

(*1) (Ref. Autopipe Calc. # W-320-27-016) Filename: C06AU9AB.OUT

CALC W320-24-011
ATTMT 4 p. 4 of 4

ICF KAISER
HANFORD COMPANY

DESIGN ANALYSIS

Calc. No. W-320-27-016
Revision No. 0
Page No. of

Client	WESTINGHOUSE HANFORD CO.	WO/Job No.	ER4319	Filename	U6-A.XLS
Subject	AY FARM JUMPER STRESS ANALYSIS	Date	8/11/95	By	RS ULBRICHT
PROJECT W-320 WASTE RETRIEVAL for TANK 241-C-106		Checked		By	
Location	C TANK FARM 200 EAST AREA	Revised		By	

ANCHOR LOADS AT PIT WALLS

(Inside Pit)	Jumper Loads			Fx (lbs)	Fy (lbs)	Fz (lbs)	Mx (in-lb)	My (in-lb)	Mz (in-lb)
Identification: Jumper U6-A	(Seismic) (*1)			22	15	16	132	72	24
Dwg. H-2-818503	(Thermal) (*1)			2533	612	7198	48924	1464	11028
Node #: A00									
Orientation: (Plan View)									
	Absolute Sum			2555	627	7214	49056	1536	11052

PRELIMINARY

(*1) (Ref. Autopipe Calc. # W-320-27-016) Filename: C06CU6-A.OUT

W320-24-013

Sluice Pit C-06C Analysis of the Pit Wall

KAISER ENGINEERS HANFORD

CALCULATION IDENTIFICATION AND INDEX

Date 9/14/95

This sheet shows the status and description of the attached Design Analysis sheets.

Discipline Structural WO/Job No. ER 4319 Calculation No. W320-24-013

Project No. & Name W320 Sluicing

Calculation Item Sluice Pit C-06C Analysis of the Pit Wall

These calculations apply to:

Dwg. No. H-2-818450 shts 1,2 and 3 Rev. No. 0/0/0

Dwg. No. H-2-41344 Rev. No. 2

Other (Study, CDR) N/A Rev. No. N/A

The status of these calculations is:

[] Preliminary Calculations

[X] Final Calculations

[] Check Calculations (On Calculation Dated)

[] Void Calculation (Reason Voided)

Incorporated in Final Drawings? [X] Yes [] No

This calculation verified by independent "check" calculations? [] Yes [X] No

Original and Revised Calculation Approvals:

	Rev. 0 Signature/Date	Rev. 1 Signature/Date	Rev. 2 Signature/Date
Originator	Michael B. Lesoza 9/14/95		
Checked by	Ronald W. Davidson 9/15/95		
Approved by	R W Davidson 9/15/95		
Checked Against Approved Vendor Data	N/A		

INDEX

Design Analysis Page No.	Description
1	Objectives
1	Criteria and assumptions
1	Analysis - description
2	References
3 to 8	Calculations
9	Conclusions
3 pages+cover	Attachment 1 - Nozzle and Jumper load sheets.

CALCULATION CROSS INDEX (Typical)

Subject Calculation No. W320-24-013

Subject Calculation Revision No.	Superceded by Calculation No.	These interfacing calculation/documents provide input to the subject calculation, and if revised may require revision of the subject calculation.		Results and conclusions of the subject calculation are used in these interfacing calculations and/or documents.		Does the output interface calculation/ documents require revision?		Has the output interface calculation/ documents been revised?		Discipline manager's signature and date indicating evaluation complete.
		Calculation/Document No.	Revision No.	Calculation/Document No.	Revision No.	Yes	No	Yes	No	
		W320-24-011	0	H-2-818450 SH1,	0					Ken Dawson 9/15/95
		W320-27-016	0	H-2-818450 SH2	0					
		W320-27-013	0	H-2-818450 SH3	0					
		W320-27-028	0	H-2-41344	2					

SFS No. _____

DESIGN VERIFICATION SCREENING CRITERIA page iii of iii

Project/Document No. W320-24-013

When the design or design change affects hardware, formal design verification must be performed if one or more of the following questions must be answered affirmatively (YES).

YES	NO	
✓		1. Does the design or design change involved meet the established criteria to be considered Safety Class 1?
	✓	2. Does this design or design change cause or permit changes to Safety Class 1 instrument or alarm setpoints outside of previously approved operational limits?
	✓	3. Does this design or design change significantly affect the nuclear or environmental safety consequences of a malfunction or failure of the structure, system, or component?
	✓	4. Does this design or design change involve or change design that has previously undergone formal design verification?

[signature] 9/15/95

Assigned Lead Engineer — Date

[signature] 9/15/95

Responsible Discipline Manager — Date

Original Design Package Distribution:

- Project Manager
- Design Verification Officer
- Engineering Document Control

Design Change Distribution:

- Attach to Engineering Change Notice

KEH-1981.00 (09/92)

KAISER ENGINEERS HANFORD

Calc. No. W320-24-013
Revision 0
Page No. / of

DESIGN ANALYSIS

Client WHC
Subject Sluice Pit C-06C Analysis of the Pit Wall
Location 241-CR-06C - Sluice Pit

WO/Job No. ER 4319/W-320
Date 09/08/1995 By M. B. Lasota
Checked 9/15/95 By R. W. Davidson
Revised N/A By N/A

1. OBJECTIVES

The purpose of this evaluation is to determine whether original design of existing walls at 241-C-106 Sluice Pit is adequate to accommodate the new pipe loads, jumper loads, seismic loads and also existing soil loads without affecting the structural integrity of the pit. The loads will be divided into five load cases: Dead Load, including cover weight -D, Live Load in terms of overburden pressure -L, Load resulting from lateral earth pressure -H, Earthquake Load, including amplified self weight, amplified weight of the cover blocks and dynamic earth pressure resulting from Design Bases Earthquake -E, and the Load resulting from the equipment penetrating and supported by the Pit Wall -R_o. The eleven load combinations recommended in the reference 5 of calc set W320-24-011 rev. 0, will be considered to determine the worst condition. These pit walls will be analyzed as the worst case at 241-C-106 Tank.
The evaluation of the south and east pit walls will be limited to the comparison between parameters/geometry and load conditions of the analyzed Pump Pit wall in the calc set W320-24-011 and subject Sluice Pit walls.

2. CRITERIA AND ASSUMPTIONS

DESIGN CRITERIA

Functional Design Criteria WHC-SD-W320-FDC-001, REV. 3 for Tank 241-C-106 Waste Retrieval Project, W-320.
The criteria for evaluation of pit walls is outlined in SDC 4.1 Rev 11.
The walls and cover blocks will be analyzed as Safety Class 1 structures.

METHODS

Manual calculations.

ASSUMPTIONS

1. Due to relatively small overall dimensions of the pit, and a thick (18" minimum) reinforced concrete walls, rigid response of the pit is assumed. As a consequence the ground acceleration is used as a seismic input. The results from Attachment 1 from calc. set W320-24-011 clearly demonstrate validity of this assumption.

KAISER ENGINEERS HANFORD

Calc. No. W320-24-013
Revision 0
Page No. 2 of

DESIGN ANALYSIS

Client WHC
WO/Job No. ER 4319/W-320
Subject Sluice Pit C-06C Analysis of the Pit Wall
Date 09/08/1995 By M. B. Lasota
Checked 9/15/95 By R. W. Davidson
Location 241-CR-06C - Sluice Pit
Revised N/A By N/A

3. REFERENCES

1. "Theory and analysis of Plates, classical and numerical methods" Rudolph Szilard, Prentice Hall, 1974.
2. Calculations No: W320-24-011 rev. 0.

ICF KAISER HANFORD

Calc. No.: W320-24-013
Revision: 0
Page No.: 3 of

DESIGN ANALYSIS

Client: WHC
Subject: Sluice Pit C-06C Wall Analysis

Location: Tank 241-C-106, Sluice Pit.

WO/Job No.: ER4319/W320
Date: 09/07/1995
Checked: 9/15/95
Revised:

By: M.B. Lasota
By: R. W. Davidson
By:

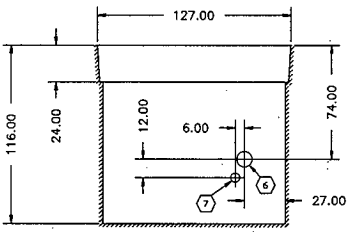

FIGURE 1
241-C-06C SLUICE PIT EAST WALL
GEOMETRY AND CORE DRILL LOCATIONS

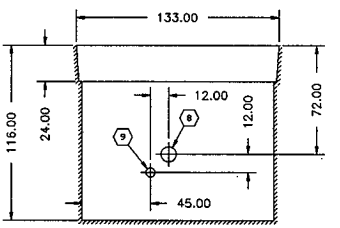

FIGURE 2
241-C-06C SLUICE PIT SOUTH WALL
GEOMETRY AND CORE DRILL LOCATIONS

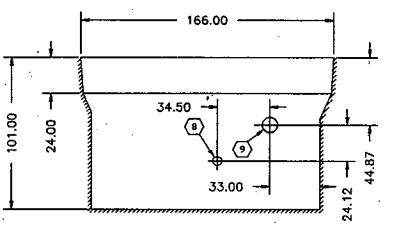

FIGURE 3
241-C-06A PUMP PIT EAST WALL
GEOMETRY AND CORE DRILL LOCATIONS

ICF KAISER HANFORD

DESIGN ANALYSIS

Calc. No.: W320-24-013
Revision: 0
Page No.: 4 of

Client: WHC
Subject: Sluice Pit C-06C Wall Analysis

Location: Tank 241-C-106, Sluice Pit.

WO/Job No.: ER4319/W320
Date: 09/07/1995
Checked: 9/15/95
Revised:

By: M.B. Lasota
By: R. W. Davidson
By:

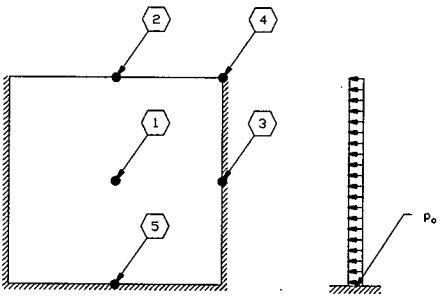

FIGURE 4
ANALYTICAL MODEL OF THE WALL
BOUNDARY CONDITIONS, LOAD CONDITION AND CRITICAL NODES

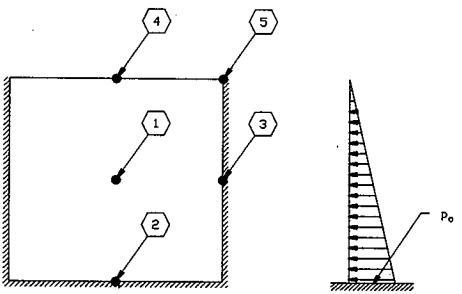

FIGURE 5
ANALYTICAL MODEL OF THE WALL
BOUNDARY CONDITIONS, LOAD CONDITION AND CRITICAL NODES

ACAD FILE: SLUPTGEO

ICF KAISER HANFORD

DESIGN ANALYSIS

Calc. No.: W320-24-013
Revision: 0
Page No.: 5 of

Client: WHC
Subject: Sluice Pit C-06C Analysis of the Pit Wall
Location: Tank 241-C-106, Sluice Pit.

WO/Job No.: ER4319/W320
Date: 09/12/1995
Checked: 9/15/95
Revised:

By: M.B. Lasota
By: R. W. Davidson
By:

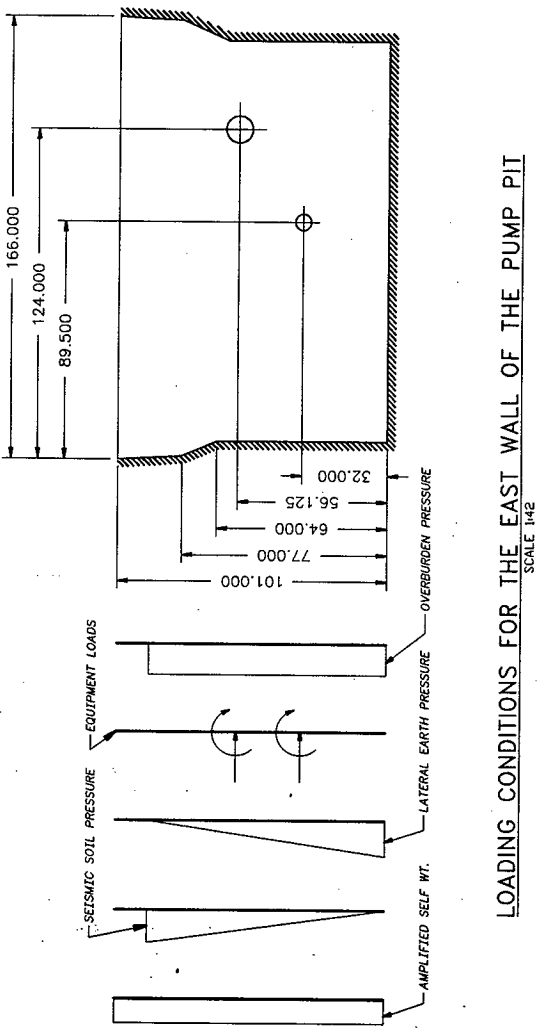

LOADING CONDITIONS FOR THE EAST WALL OF THE PUMP PIT
SCALE 1:42

ACAD FILE: PPITLOAD

KAISER ENGINEERS HANFORD

Calc. No. W320-24-013
Revision 0
Page No. 6 of

DESIGN ANALYSIS

Client WHC
WO/Job No. ER 4319/W-320
Subject Sluice Pit C-06C Analysis of the Pit Wall
Date 09/08/1995 By M. B. Lasota
Checked 9/15/95 By R. W. Davidson
Location 241-CR-06C - Sluice Pit
Revised N/A By N/A

The following table summarizes parameters of analyzed Pump Pit wall and both east and south walls of Sluice Pit.

PARAMETERS	241-06A EAST	241-06C SOUTH	241-06C EAST
Thickness	*18"*	*18"*	*18"*
Width	*166"*	*133"*	*127"*
Height	*101"*	*116"*	*116"*
Vert. stl inside	*0.2657 in^2/ft*	*0.2325 in^2/ft*	*0.2325 in^2/ft*
Vert. stl outside	*0.5314 in^2/ft*	*0.2325 in^2/ft*	*0.2325 in^2/ft*
Hor. stl inside	*0.2657 in^2/ft*	*0.2657 in^2/ft* *0.4133 in^2/ft*	*0.2657 in^2/ft* *0.4133 in^2/ft*
Hor. stl outside	*0.2657 in^2/ft*	*0.2657 in^2/ft* *0.4133 in^2/ft*	*0.2657 in^2/ft* *0.4133 in^2/ft*

The following table summarizes the nozzle loads for analyzed Pump Pit wall and both east and south walls of Sluice Pit.

Loads/Location	241-06A EAST	241-06C EAST (6)	241-06C SOUTH (8)
F_x	***10909 lbf***	*10245 lbf*	*5028 lbf*
F_y	***142 lbf***	*45 lbf*	*119 lbf*
F_z	*617 lbf*	*237 lbf*	***836 lbf***
M_x	*2412 lbf*in*	*288 lbf*in*	***4573 lbf*in***
M_y	*17256 lbf*in*	*8880 lbf*in*	***24468 lbf*in***
M_z	***4848 lbf*in***	*432 lbf*in*	*4573 lbf*in*

KAISER ENGINEERS HANFORD

Calc. No. W320-24-013
Revision 0
Page No. 7 of

DESIGN ANALYSIS

Client WHC
Subject Sluice Pit C-06C Analysis of the Pit Wall
Location 241-CR-06C - Sluice Pit

WO/Job No. ER 4319/W-320
Date 09/08/1995 By M. B. Lasota
Checked 9/15/95 By R. W. Davidson
Revised N/A By N/A

The following is a comparison of the moments in the wall subjected to uniformly distributed pressure and to the linearly increasing hydrostatic pressure. The results will be tabulated for easy comparison.

MOMENTS IN THE PLATES - UNIFORM PRESSURE ref figure 4.

	241-06A EAST	241-06C SOUTH	241-06C EAST
a	101 in	116 in	116 in
b	166 in	133 in	127 in
Aspect ratio a/b	0.6084	0.8722	0.9134
c_1	0.0046	0.0084	0.0087
c_2	0.0173	0.0251	0.0259
c_3	0.0337	0.0422	0.0427
α	-0.1445	-0.0739	-0.0673
ß	-0.0422	-0.0601	-0.0622
g	-0.0801	-0.0849	-0.0850
$m_{x1}=c_1*b^2*p_o$	126.76*p_o	148.59*p_o	140.32*p_o
$m_{x\alpha}=\alpha*a^2*p_o$	-1474.04*p_o	-994.40*p_o	-905.59*p_o
$m_{y1}=c_2*b^2*p_o$	476.72*p_o	443.99*p_o	417.74*p_o
$m_{y2}=c_3*b^2*p_o$	928.64*p_o	746.48*p_o	688.71*p_o
$m_{y3}=ß*b^2*p_o$	-1162.86*p_o	-1063.11*p_o	-1003.22*p_o
$m_{y4}=g*b^2*p_o$	-2207.24*p_o	-1501.80*p_o	-1370.97*p_o

KAISER ENGINEERS HANFORD

Calc. No. W320-24-013
Revision 0
Page No. 8 of

DESIGN ANALYSIS

Client WHC
Subject Sluice Pit C-06C Analysis of the Pit Wall
Location 241-CR-06C - Sluice Pit

WO/Job No. ER 4319/W-320
Date 09/08/1995 By M. B. Lasota
Checked 9/15/95 By R. W. Davidson
Revised N/A By N/A

MOMENTS IN THE PLATES - HYDROSTATIC PRESSURE ref figure 5.

	241-06A EAST	241-06C EAST	241-06C SOUTH
a	*101 in*	*116 in*	*116 in*
b	*166 in*	*127 in*	*133 in*
Aspect ratio a/b	*0.6084*	*0.8722*	*0.9134*
c_1	*0.0034*	*0.0084*	*0.0087*
c_2	*0.0056*	*0.0104*	*0.0109*
c_3	*-0.0714*	*-0.0408*	*-0.0384*
c_4	*-0.0164*	*-0.0256*	*-0.0276*
c_5	*0.0084*	*0.0099*	*0.0098*
c_6	*-0.0166*	*-0.0143*	*-0.0135*
$m_{x1}=c_1*b^2*p_o$	*93.69*p_o*	*123.82*p_o*	*117.74*p_o*
$m_{x2}=c_3*a^2*p_o$	*-728.35*p_o*	*-549.00*p_o*	*-516.71*p_o*
$m_{y1}=c_2*b^2*p_o$	*154.31*p_o*	*183.97*p_o*	*175.81*p_o*
$m_{y3}=c_4*b^2*p_o$	*-451.92*p_o*	*-452.84*p_o*	*-445.16*p_o*
$m_{y4}=c_5*b^2*p_o$	*231.47*p_o*	*175.12*p_o*	*158.06*p_o*
$m_{y5}=c_6*b^2*p_o$	*-457.43*p_o*	*-252.95*p_o*	*-217.74*p_o*

The preceding tables reflect the load sources L, H and portions of E, Dead Load is restrained basically by walls membrane forces whose influence on the Stress in the Pit wall is minimal.

The load component of the Equipment Load R_o, that is most critical to the wall is the thrust load i.e. load perpendicular to the wall. This load is the source of the maximum shear stress in the pump pit wall. Since the magnitude of the thrust load is the highest at the Pump Pit wall and the wall thickness is the same for all three walls one can conclude that Sluice Pit walls are structurally sound by virtue of Pump Pit being qualified. The shear strength of the Pump Pit wall was based on the strength of the plain concrete and therefore is not influenced by the difference in available reinforcement.

KAISER ENGINEERS HANFORD

Calc. No. W320-24-013
Revision 0
Page No. 9 of 9

DESIGN ANALYSIS

Client WHC
Subject Sluice Pit C-06C Analysis of the Pit Wall
Location 241-CR-06C - Sluice Pit

WO/Job No. ER 4319/W-320
Date 09/08/1995 By M. B. Lasota
Checked 9/15/95 By R. W. Davidson
Revised N/A By N/A

6. CONCLUSIONS.

The analysis revealed, that the stress in all of the structural components of the Sluicing Pit is satisfactory. In addition stress imposed in the Pit wall by the penetrating piping is within allowable limits.

Attachment 1.

Load Data sheets for the nozzle load

Total 3 pages.

ICF KAISER
HANFORD COMPANY

DESIGN ANALYSIS

Calc. No. W-320-27-013
Revision No. 1
Page No. 70 of 70

Client	WESTINGHOUSE HANFORD CO.	WO/Job No.	ER4319	Filename	ANCOR-SP.xls
Subject	PROCESS PIPE STRESS ANALYSIS	Date	8/4/1995	By	D. L. STONE
PROJECT W-320 WASTE RETRIEVAL for TANK 241-C-106		Checked	8/7/95	By	CD Jones
Location	C TANK FARM 200 EAST AREA	Revised		By	

ANCHOR LOADS AT PIT WALLS

Nozzle: 6 Location: 241-C-06C Sluice Pit	Pipe Loads	Pipe Length (*2) (in.)	Friction Force (*3) (lb/in)	Fx (lbs)	Fy (lbs)	Fz (lbs)	Mx (in-lb)	My (in-lb)	Mz (in-lb)
	Inner Pipe								
Identification: W-320 Supernate Line Nozzle	(Seismic)			264	0	207	0	5424	0
	(Thermal)			378	-45	30	288	-3456	432
	(*1)								
Node #: A00	Encasement								
Orientation:	(Seismic) (*4)	L = 201	F1 = 24.48	4932.23					
(Elevation View) Z, X, L	(Thermal) (*5)	L = 201	F2 = 23.18	4670.31					
	Absolute Sum			10245	45	237	288	8880	432

Nozzle: U-2 Location: 241-AY-02A Sluice Pump Pit	Pipe Loads	Pipe Length (*2) (in.)	Friction Force (*3) (lb/in)	Fx (lbs)	Fy (lbs)	Fz (lbs)	Mx (in-lb)	My (in-lb)	Mz (in-lb)
	Inner Pipe								
Identification: W-320 AY Supernate Line Nozzle	(Seismic)			0	0	0	0	0	0
	(Thermal)			-633	-67	964	-972	33396	-36
	(*1)								
Node #: A167	Encasement								
Orientation:	(Seismic) (*4)	L = 120	F1 = -24.48			-2937.60			
(Elevation View) X, Z	(Thermal) (*5)	L = 120	F2 = -23.18			-2781.60			
	Absolute Sum			633	67	6683	972	33396	36

(*1) (Ref. Appendix B, Autopipe Filename: TRAN-SP)
(*2) L = Length of pipe immediately preceding anchor as per DWGS # ES-320-M3 and # ES-320-M6: (Ref. Appendix D)
(*3) For underground pipe:
(For SEISMIC: Ref. Calculation W320-27-014, Appendix. AO, Page 5 , Soil Friction)
(For THERMAL: Ref. Calculation W320-27-014, Appendix. AP, Page 5 , Static Soil Friction)
(*4) LOAD = F1 x L
(*5) LOAD = F2 x L

ICF KAISER
HANFORD COMPANY

DESIGN ANALYSIS

Calc. No. W-320-27-016
Revision No: 0
Page No. 8 of 8

Client WESTINGHOUSE HANFORD CO.
Subject C AY FARM JUMPER STRESS ANALYSIS
PROJECT W-320 WASTE RETRIEVAL for TANK 241-C-106
Location C TANK FARM 200 EAST AREA

WO/Job N ER4319
Date 9/11/95
Checked 9/11/95
Revised

Filename U6-A.xls
By M. M. AHMED
By M. K. PAL
By

ANCHOR LOADS AT PIT WALLS

NOTE: THESE ARE THE JUMPER PIPING LOADS EXERTED ON PIT WALL FROM INSIDE THE PIT. DOES NOT INCLUDE THE TRANSFER . PIPE LINE LOADS FROM OUT SIDE THE PIT.

(Inside Pit)	Jumper Loads	Fx (lbs)	Fy (lbs)	Fz (lbs)	Mx (in-lb)	My (in-lb)	Mz (in-lb)
Identification: Jumper U6-A g:H-2-818515	(Seismic) (*1)	13	1	10	68	72	68
AutoPipe File: MA-J6A Node #: A00 Orientation: 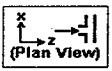	(Thermal) (*2)	1573	205	1892	1416	6972	1155
	(*3) ABSOLUTE SUM	1586	206	1902	1484	7044	1223

NOTES:

(*1): SEISMIC LOADS COULD BE POSITIVE OR NEGATIVE.

(*2): THERMAL LOADS SPECIFIED ARE THE ALGEBRIC SUM OF GRAVITY AND THERMAL LOADS.

(*3): ABSOLUTE SUM IS THE TOTAL OF THERMAL AND SEISMIC DISREGARDING THE SIGNS.

ICF KAISER
HANFORD COMPANY

DESIGN ANALYSIS

Calc. No. W-320-27-028
Revision No. 0
Page No. of

Client	WESTINGHOUSE HANFORD CO.	WO/Job No.	ER4319	Filename	ANCOR.xls
Subject	MISCELLANEOUS PIPING STRESS ANALYSIS	Date	/ 8 / 22 / 1995	By	D. L. STONE
PROJECT W-320 WASTE RETRIEVAL for TANK 241-C-106		Checked		By	
Location	C TANK FARM 200 EAST AREA	Revised		By	

ANCHOR LOADS AT PIT WALLS

Nozzle: U-8 / Location: 241-C-06C Sluice Pit	Pipe Loads	Pipe Length (*2) (in.)	Friction Force (*3) (lb/in)	Fx (lbs)	Fy (lbs)	Fz (lbs)	Mx (in-lb)	My (in-lb)	Mz (in-lb)
	Inner Pipe								
Identification: W-320 Process Air Bldg. Floor Drain Piping	(Seismic)			114	13	27	804	3120	396
	(adjusted See *6)			**100**		**100**	**848**		**848**
	(Thermal)			903	-106	138	3240	21348	2028
	(adjusted See *6)			**736**		**736**	**3724**		**3724**
	(*1)								
Node #: B14	**Encasement**								
Orientation: (*6) 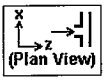	(Seismic) (*4)	L = 88	F1 = 24.48			2153.26			
	(Thermal) (*5)	L = 88	F2 = 23.18			2038.91			
	Absolute Sum			836	119	5028	4573	24468	4573

SEAL POT / Location: Process Air Bldg.	Pipe Loads	Pipe Length (*2) (in.)	Friction Force (*3) (lb/in)	Fx (lbs)	Fy (lbs)	Fz (lbs)	Mx (in-lb)	My (in-lb)	Mz (in-lb)
Identification: W-320 Process Air Bldg. Floor Drain Piping	**Inner Pipe**	Loads are not applicable since both Process and Encasement Pipe anchors are not coincedent at the Seal Pot.							
Node #: B04	**Encasement**								
Orientation: 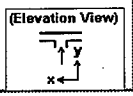	(Seismic) (*4)	L = 28.6	F1 = 24.48		699.15				
	(Thermal) (*5)	L = 28.6	F2 = 23.18		662.02				
	Absolute Sum			0	1361	0	0	0	0

(*1) (Ref. Appendix C, Autopipe Filename: M7-R0)
(*2) L = Pipe lengths immediately preceding anchors as per DWG # ES-320-M07 and ES-320-M08 : (Ref. Appendix A)
(*3) For underground pipe. (Ref. Appendix B, STAB)
(*4) LOAD=F1 x L
(*5) LOAD=F2 x L
(*6) Orientation to Axis "z" is assumed for Nozzle U-8 in this tabulation. Actual orientation of the Autopipe Model is as per DWG # ES-320-M07, 45 degrees to the assigned axes, and adjusted for this table by the equations: 0.707 x (Fx+Fz) and 0.707 x (Mx+Mz).

W320-24-014

Process Building and Equipment Skid Foundation

KAISER ENGINEERS HANFORD	CALCULATION IDENTIFICATION AND INDEX	Page i of iii Date 05/12/94

This sheet shows the status and description of the attached Design Analysis sheets.

Discipline Civil WO/Job No. W-320/ER-4319 Calculation No. W320-24-014

Project No. & Name PROJECT W-320, TANK 241-C-106 WASTE RETRIEVAL

Calculation Item Process Building and Equipment Skid Foundation

These calculations apply to:

Dwg. No. H-2-818451, Sht. 1, 2, 3 Rev. No. 0, 0, 0

Dwg. No. Rev. No.

Other (Study, CDR) Rev. No.

The status of these calculations is:

[ ] Preliminary Calculations

[X] Final Calculations

[ ] Check Calculations (On Calculation Dated)

[ ] Void Calculation (Reason Voided)

Incorporated in Final Drawings? [X] Yes [ ] No

This calculation verified by independent "check" calculations? [ ] Yes [X] No

Original and Revised Calculation Approvals:

	Rev. 0 Signature/Date	Rev. 1 Signature/Date	Rev. 2 Signature/Date
Originator	Michael R Custer 11/11/94	Michael R Custer 6/28/96	
Checked by	George J. Dyer 02/10/95	[signature] 7/14/96	
Approved by	[signature] 4/14/95	[signature] 7/14/96	
Checked Against Approved Vendor Data		Ann S Langevin 4/7/98	

REVISION 1: REVISED PAGES 2 & 4.

INDEX

Design Analysis Page No.	Description
i	Calculation Identification and Index
ii	Calculation Cross Index
iii	Design Verification Screening Criteria
1,2	OBJECTIVES; CRITERIA; DATA; ASSUMPTIONS; METHODS; REFERENCES; CALCULATIONS; CONCLUSIONS
3 - 17	DESIGN CALCULATIONS
APPENDICES	None
18 - 20	Drawings H-2-818451, Sheets 1, 2 and 3

CALCULATION CROSS INDEX (Typical)

Subject Calculation No. W320-24-014, REV.0

Subject Calculation Revision No.	Superceded by Calculation No.	These interfacing calculation/documents provide input to the subject calculation, and if revised may require revision of the subject calculation.		Results and conclusions of the subject calculation are used in these interfacing calculations and/or documents.		Does the output interface calculation/ documents require revision?		Has the output interface calculation/ documents been revised?		Discipline manager's signature and date indicating evaluation complete.
		Calculation/Document No.	Revision No.	Calculation/Document No.	Revision No.	Yes	No	Yes	No	
0	—	W320-24-019	0	H-2-818451 (SHEET 1)	0		✓		✓	4/14/98
				H-2-818451 (SHEET 2)	0		✓		✓	↓

DESIGN VERIFICATION SCREENING CRITERIA

Project/Document No. W-320; CALCULATION W320-24-014, REV. 0

When the design or design change affects hardware, formal design verification must be performed if one or more of the following questions must be answered affirmatively (YES).

YES	NO		
____	✓	1.	Does the design or design change involved meet the established criteria to be considered Safety Class 1 or 2?
____	✓	2.	Does this design or design change cause or permit changes to Safety Class 1 or 2 instrument or alarm setpoints outside of previously approved operational limits?
____	✓	3.	Does this design or design change significantly affect the nuclear safety consequences of a malfunction or failure of the structure, system, or component?
____	✓	4.	Does this design or design change involve or change design that has previously undergone formal design verification?

[signature] 6/16/95
Assigned Lead Engineer Date

[signature] 6/16/95
Responsible Discipline Manager Date

Original Design Package Distribution:
- Project Engineer
- Chief Design Engineer
- Engineering Document Control

Design Change Distribution:
- Attach to Engineering Change Notice

KEH-1981.00 (02/90)

KAISER ENGINEERS HANFORD

Calc. No. W320-24-014
Revision 0
Page No. 1 of 20

DESIGN ANALYSIS

Client WHC
WO/Job No. W-320/ER4319
Subject Process Building and Equipment Skid Foundation
Date 05/12/94 By M.R Custer MRC
Checked 05/10/95 By George J. Lyn
Location TANK 241-C-106
Revised By

OBJECTIVE:

The objective of this calculation is to provide a detailed, foundation design for the Process Building enclosure and the prefiltration/ recirculation equipment skid, define the dimensions and other requirements for purchase of a building enclosure and determine the building and skid anchorage requirements. The foundation provides structural support for the protective enclosure and the Recirculation/ Prefiltration equipment skid, portion of Tank 241-C-106 Waste Retrieval project.

CRITERIA:

1. DOE ORDER 6430.1A (04/06/89)
2. HANFORD PLANT STANDARDS, STANDARD ARCH./ CIVIL DESIGN CRITERIA SDC-4.1, REV.11
3. FUNCTIONAL DESIGN CRITERIA, WHC-SD-W320-FDC-001, REV.2
4. WHC-SD-WM-SEL-033, REV. 0-C, Interim Safety Equipment List for 241-C-106 WASTE RETRIEVAL
5. AMERICAN SOCIETY of CIVIL ENGINEERS STANDARD, ASCE 7-88

DATA:

1. The equipment and foundation for the equipment are Safety Class 3 per criteria 4 (Refer to the Active Ventilation System Classification).

2. Material:
   Concrete: f'c = 4000 psi @ 28 days
   Reinforcing steel: ASTM A615G Grade 60

ASSUMPTIONS: The weights and equipment geometry will be conservatively assumed and will be verified on receipt and review of the vendor equipment drawings.

METHODS:

Hand calculations

REFERENCES:

1. ACI 318-89, Building Code Requirements for Reinforced Concrete
2. Uniform Building Code (UBC), 1991 Edition
3. HANFORD PLANT STANDARDS, STANDARD ARCH./ CIVIL DESIGN CRITERIA, SDC-4.1, REV.11
4. Foundation Analysis and Design, Jesph E. Bowles (1st Edition)
5. ASCE 7-88 (American Society of Civil Engineers Standard), " Minimum Design Loads for Buildings and Other Structures"

Calc. No. W320-24-014
Revision 1
Page No. 2 of 20

DESIGN ANALYSIS

Client WHC

Subject Process Building and Equipment Skid Foundation

WO/Job No. W-320/ER4319
Date 06/27/96 By M.R Custer MRC
Checked 7/11/96 By [signature]

Location TANK 241-C-106

Revised By

CALCULATIONS:

REFER TO THE DESIGN CALCULATIONS SECTION

CONCLUSIONS:

The foundation for the Process Building and the Prefiltration/ Recirculation skid is designed as a mat type foundation. The UBC code, as well as the Hanford Plant Standards, SDC-4.1 (References 2 and 3 respectively) also requires that a foundation wall be provided, which extends below grade to a minimum depth of 30 inches. This requirement has been incorporated into the final design. The actual foundation loads, developed in the calculation are below the maximum capacity of the designed foundation, due to the large area required for the layout of the skid equipment and piping. The design provided, satisfies the design requirements for the structure.

REVISION 1 : CONCLUSION

Revision 1 incorporates the revised weight of the Prefiltration/Recirculation skid which was modified in calculation W320-24-019, Rev.1. The updated information does not affect the original conclusion of the calculation, since the overall effect is a reduction in the total weight of the equipment on the foundation and the current design envelops these loads.

KAISER ENGINEERS HANFORD

Calc. No. W320-24-014
Revision 0
Page No. 3 of 20

DESIGN ANALYSIS

Client WHC

WO/Job No. W-320/ER4319

Subject Process Building and Equipment Skid Foundation

Date 05/12/94 By M.R Custer MRC

Checked 06/10/95 By George J. Zyl

Location TANK 241-C-106

Revised By

DESIGN/ANALYSIS:
The design and analysis of the foundation consists of the conservative development of design loads for the equipment and structures; design of the equipment and building foundation structure; and the design of anchorage for the building enclosure and equipment skid. Since the building will be supplied later by a vendor, the reactions of the building will be conservatively, estimated to enable the foundation design to proceed. The equipment and components supported on the foundation are Class 3 (per Criteria 3), therefore the foundation will be Class 3.

DESIGN REQUIREMENTS:

Foundation:

- Minimum depth to the bottom of the foundation for permanent structures below finished grade, 2'-6" (Reference 2 and 3)
- Allowable soil pressure for design, 1500 psf (Reference 2, Table 29-B)
- Coefficient of Sliding = 0.25 (Reference 2, Table 29-B)
- Minimum footing dimensions, (Reference 2, Table 29-B)
  - Thickness of foundation wall, 6"
  - Width of footing, 12"
  - Thickness of footing, 6"
  - Depth of footing below undisturbed ground, 12"
  - Minimum slab thickness (plain concrete), 3 1/2"
- Lateral bearing, 150 psf/ ft. of depth
- Load Combinations: (Foundation design) (Reference 2 & 3)

D = DEAD LOAD, L = LIVE LOAD, W = WIND LOAD, E = EARTHQUAKE LOAD

1) U = 1.4D + 1.7L (Minimum design requirements)
2) U = 0.75 (1.4D + 1.7L + 1.7W)
3) U = 0.9D + 1.3 W

In addition, if earthquake loads are included in the design, load combinations of section 2609(c)(2),(Reference 2) apply, except (1.1E) is substituted for (W), as follows:

4) U = 0.75 (1.4D + 1.7L + 1.87E)
5) U = 0.9D + 1.43E

also for earthquake loading, use the following:

6) U = 1.4 (D+L+E)
7) U = 0.9D +/- 1.4E

Calc. No. W320-24-014
Revision 1
Page No. 4 of 20

DESIGN ANALYSIS

Client WHC
Subject Process Building and Equipment Skid Foundation
Location TANK 241-C-106

WO/Job No. W-320/ER4319
Date 06/27/96 By M.R Custer MRC
Checked 7/11/96 By
Revised By

Building Enclosure:

- Roof Dead Load, 20 psf (included in 5000 lb building weight) (Reference 5)
  - Design of the roof covering, 50 psf or 200 lb concentrated load
  - Design of the primary framing and purlins, 20 psf
- Snow Load, 20 psf (Reference 3, Section C-3b)
- Roof Live Load, 20 psf (Reference 3, Section C-3a)
- Wind Load, (Reference 3, Section C-1a)
  - Basic wind speed, 70 mph
  - Importance Factor, 1.07
  - Exposure Category, C
- Load Combinations: (Building reactions) (Reference 2)
  1) U = D + L + (roof live load or snow load)
  2) U = D + L + W or E
  3) U = D + L + W + Snow/ 2
  4) U = D + L + Snow + W/2
  5) U = D + L + E

DESIGN LOADS:

DEAD LOADS

- Estimated weight of building enclosure, 5000 lbs = 5.0 kips
- Prefiltration/ Recirculation equipment skid assembly, **56.0 kips**
- Foundation weight (assume 12 " thick slab):

Wt. slab = 15 ft x 25 ft x 1.0 ft x 150 psf = 56250 lbs = 56.25 k

Wt. found. wall = 1.5 ft (25 ft + 13 ft)2 x 1.17 ft x 150 psf = 20000 lbs = 20 k
Wt. found. curb = 10"/12" x 1.0 ft (25 ft + 15 ft) 2 x 150 psf = 10000 lbs = 10 k

Total Concrete weight = 86250 lbs = 86.25 kips

TOTAL DEAD LOADS (w/o concrete) = 5.0 + **56.0** = **61.0 kips**

TOTAL DEAD LOADS (w/ concrete) = 5.0 + **56.0** + 86.25 = **147.3 kips**, Use 154 kips for foundation design

Note: Offset of skid assembly neglected

KAISER ENGINEERS HANFORD

Calc. No. W320-24-014
Revision 0
Page No. 5 of 20

DESIGN ANALYSIS

Client WHC

Subject Process Building and Equipment Skid Foundation

WO/Job No. W-320/ER4319
Date 05/12/94 By M.R Custer MRC

Checked 02/10/95 By George J. Lyn

Location TANK 241-C-106

Revised By

LIVE LOADS:

- Live Load (foundation), Live load negligible due to limited access, **Use 7.5 kips**
- Roof Live Load (Building), L_R =25 ft x 15 ft x 20.0 psf = **7.5 kips**
- Horizontal seismic load of skid assembly = 23.1 kips (N-S),(@ height of 4.79 ft.)

SNOW LOAD: S = 25 ft. x 15 ft. x 20 psf = 7500 lbs or **7.5 kips**

WIND LOAD:

Wall Loading: (Horizontal)

$p = q_z G_h C_p - q_h (GC_{pi})$ (Reference 5, Table 4)

$q_z = 0.00256 K_z (IV)^2$,

$K_z = 0.80$ (Exposure C) (Reference 3 & 5,Table 6)

$I = 1.07$ (Reference 3)

$V = 70$ mph (Reference 3)

$q_z = 0.00256 (0.80)[(1.07)70]^2 = 11.5$ psf

$q_h = q_z$, (Roof has negligible slope)

$Gh = 1.32$ (Reference 5, Table 8)

$Cp = 0.8$ (Reference 5, Figure 2)

$(GC_{pi}) = (+/-) 0.25$ (Reference 5, Table 9)

$p = 11.5$ psf $(1.32)(0.8) - 11.5$ psf $(- 0.25) =$ **15.0 psf** (maximum)

$F_h = 15.0$ psf (10 ft)(25 ft) = 3750 lbs = **3.8 kips**

Roof Loading: (Vertical)

$p = q_z G_h C_p$, $C_p = - 0.7$

$p = (-11.5)(1.32)(0.7) = -10.63$

$F_v = -10.63$ psf (15 ft)(25 ft) = 3986 lbs = **- 4.0 kips**

M_w (horizontal) = 3.8 kips x 5.0 ft. = 19 k-ft

KAISER ENGINEERS HANFORD

Calc. No. W320-24-014
Revision 0
Page No. 6 of 20

DESIGN ANALYSIS

Client WHC
WO/Job No. W-320/ER4319
Subject Process Building and Equipment Skid Foundation
Date 05/12/94 By M.R Custer MRC
Checked 12/10/95 By George J. Lyn
Location TANK 241-C-106
Revised By

EARTHQUAKE LOADS: (Building)

- Building Safety Class 3
- Base Shear, V = ZIC/ Rw (W), where:

Z = 0.20 (Reference 2)

I = 1.25 (Reference 3)

C = 2.12 (Reference 3)

Rw = 6 (Reference 2)

E n-s = Vn-s (100% max.), E e-w = Ve-w (30% max.) (Reference 2)

En-s = Vn-s = [(0.20)(1.25)(2.12)/6] W bldg = 0.088 (5.0 k) = **0.44 kip**

Ee-w = Ve-w = [(0.20)(1.25)(2.12)/6] W bldg (0.3) = 0.3 (0.44 k) = **0.13 kip**

E (SRSS) = $[\ 0.44^2 + 0.13^2\ ]^{1/2}$ = **0.46 kip**

E (ABS) = **0.57 kip** (Use absolute sum and apply force to produce maximum loads)

EARTHQUAKE LOADS: (Foundation)

En-s = Vn-s = [0.20(1.25)(2.12)/6] W (foundation)

= 0.088 (86.3 Kips) = **7.6 Kips**

Ee-w = Ve-w = [0.20(1.25)(2.12)/6] W (foundation)(0.3)

= 0.3 (7.6 Kips) = **2.3 Kips**

E (SRSS) = $[7.6^2 + 2.3^2]^{1/2}$ = 7.9 Kips

E (ABSOLUTE SUM) = **9.9 Kips**

KAISER ENGINEERS HANFORD

Calc. No. W320-24-014
Revision 0
Page No. 7 of 20

DESIGN ANALYSIS

Client WHC
WO/Job No. W-320/ER4319
Subject Process Building and Equipment Skid Foundation
Date 05/12/94 By M.R Custer MRC
Checked 02/10/95 By George J. Zyn
Location TANK 241-C-106
Revised By

DETERMINE GOVERNING LOAD COMBINATIONS: (BUILDING)

		WIND COMP. VERT./	HORIZ.	EARTHQUAKE COMP. VERT./	HORIZ.
1)	U = 5.0 + 0.0 + 7.5 =	12.5	0.0	12.5	0.0
2)	U = 5.0 + 0.0 + (-4.0 or 0.0) =	1.0	3.8	5.0	0.57
3)	U = 5.0 + 0.0 + (-4.0) + 7.5/ 2	4.75	3.8	8.75	0.57
4)	U = 5.0 + 0.0 + 7.5 + (-4.0/ 2) =	10.5	3.8	12.5	0.57
5)	U = 5.0 + 0.0 + 0.0	0.0	0.0	5.0	0.57

DETERMINE GOVERNING LOAD COMBINATION/ LOADS: (FOUNDATION)

Total seismic load = 0.44 k + 7.6 k + (23.1)2/3 = **23.44 k**

Seismic load: (Building)

Roof area = 15 (25) = 375 sf,
Wall area = 2 (10) (15 + 25) = 800 sf
E_R = 375/ 1175 (0.57) = 0.20 k @ height of 10.0 ft
E_U = 800/ 1175 (0.57) = 0.40 k @ height of 5.0 ft
Horiz. force = 0.20 k + 0.40 k = 0.60 k

Moment = 0.20 (10.0 ft) + 0.40 (5.0 ft) = **4.0 k-ft**

Seismic load: (Skid Assembly)

Horizontal Force = 23.1 (2/3) = 15.4 k @ height of 4.785 ft
Moment = 15.4 k (4.785 ft) = **73.7 k-ft**

LOAD COMBINATIONS AND MOMENTS DUE TO HORIZ. LOADS:	COMPONENT VERTICAL/	HORIZONTAL
1) U = 1.4 (154) + 1.7 (7.5)2 =	241.1 k	0.0 k
2) U = 0.75 [1.4(154) + 1.7(7.5)2 + 1.7(-4.0)]=	175.7 k	3.8 k
Mw = 0.75 (1.7)(19 k-ft),		Mw = 24.2 k-ft

KAISER ENGINEERS HANFORD

Calc. No. W320-24-014
Revision 0
Page No. 8 of 20

DESIGN ANALYSIS

Client WHC

WO/Job No. W-320/ER4319

Subject Process Building and Equipment Skid Foundation

Date 05/12/94 By M.R Custer MRC

Checked 02/10/95 By George J. Lyn

Location TANK 241-C-106

Revised By

3) U = 0.90 (154) + 1.3 (-4.0) = Mw = 1.3 (19 k-ft),	133.4 k	3.8 k Mw = 24.7 k-ft
4) U = 0.75[1.4 (154) + 1.7(7.5)2 + 1.87(0.0) = Me = 0.75 (1.87) (4 k-ft + 73.7 k-ft),	180.8 k	23.44 k Me = 108.9 k-ft
5) U = 0.90 (154) + 1.43 (0.0) = Me = 1.43 (4 k-ft + 73.7 k-ft),	138.6 k	23.44 k Me = 111.1 k-ft
6) U = 1.4 [154 + (7.5)2 + 0.0] = Me = 1.4 (114.1 k-ft),	236.6 k	23.44 k Me = 159.7 k-ft
7) U = 0.9 (154) (+/-) 1.4 (0.0) = Me = 1.4 (114.1 k-ft),	138.6 k	23.44 k Me = 159.7 k-ft

FOUNDATION DESIGN:

The foundation required is a mat type on grade with a perimeter wall extending 30" below grade. The size of the foundation required is predetermined by the physical layout of the equipment and components. The foundation dimensions are: 15 ft x 25 ft, (375 sf), estimated 12" thick slab. (Refer to Figure 1 for foundation loads/ geometry)

- Check foundation size:

$q_{e(effective)}$ = 1.5 ksf - 12"/ 12" (150 psf)(1 k/ 1000 lb) = 1.35 ksf

A_{reqd} = (D.L + L.L)/ qe = 169.0/ 1.35 = 125.0 sf < 375 .... ok

- Check foundation stability:

Safety Factor (Overturning): (Reference 2, Section 2337 (a) & 2336 (b))

$S.F_{OT}$ = [154.0 k (7.5 ft)(0.85) + 7.5 k (2)(7.5 ft)]/ [23.1 k (2/3) (6.29 ft) + 0.44 k (2/3)(7.67 ft) + 7.6 k (0.50 ft)] = 1094.3/ 102.9 = 10.6

$S.F_{OT}$ = 10.6 > 2.0 .... ok

Safety Factor (Sliding):

$S.F_{SL}$ = 0.25 [0.85 (154.0 k) + 7.5 k (2)]/ (23.1 k + 0.44 k)2/3 + 7.6 k =
$S.F_{SL}$ = 1.6 > 1.5 .... ok (In addition, the slab has an increased thickness (wall) at the perimeter (2.5 ft. deep), which is designed to resist the moment developed by the lateral forces. This provides additional lateral resistence to sliding.

KAISER ENGINEERS HANFORD

Calc. No. W320-24-014
Revision 0
Page No. 9 of 20

DESIGN ANALYSIS

Client WHC
WO/Job No. W-320/ER4319
Subject Process Building and Equipment Skid Foundation
Date 05/12/94 By M.R Custer MRC
Checked 02/10/95 By George J. Lynn
Location TANK 241-C-106
Revised By

• Determine the center of gravity of the loads relative to the kern:

k_X, (length) = 25.0 ft/ 6 = 4.2 ft

$C.G_{SKID\ E\text{-}W}$ = 12.5 ft, e_X = (25.0 ft/ 2) - 12.5 ft = 0.0 ft

k_Z, (width) = 15.0 ft/ 6 = 2.5 ft

$C.G_{SKID\ N\text{-}S}$ = 7.28 ft, e_Z = (15.0 ft/ 2) - 7.28 = 0.22 ft = 2.6" (negligible)

The foundation loads are located within the kern and at or nearly at the centerlines and center of gravity of the foundation in both direction, therefore:

Use q = P/A (+/-) M x c/I, two directions to determine the maximum soil pressures.

• Determine maximum soil bearing pressure (unfactored loads):

P_1 = 61.6 k (Equipment dead load)

P_2 = 7.5 k (2) = 15.0 k (Live load at centerline of foundation)

P_3 = 86.3 k (Dead weight of the concrete at centerline of foundation)

M_{X1} = 4.0 k-ft + 0.44 (1.5 ft) = 4.7 k-ft (Moment due to building portion of N-S seismic load, C.G located (1.5 ft above bottom of foundation)

M_{X2} = 23.1 k (2/3) (6.29 ft) = 96.9 k-ft (Moment due to equipment portion of N-S seismic load, C.G located (4.785 + 0.5 + 1.0 ft above bottom of foundation)

M_{X3} = 86.25 k (0.5 ft) = 43.1 k-ft (Moment due to the concrete foundation portion of the N-S seismic load, C.G located (0.5 ft above bottom of foundation)

M_{Z1} = 0.30 (4.7 k-ft) = 1.4 k-ft (E-W component, refer to M_{X1})

M_{Z2} = 0.30 (96.9 k-ft) = 29.1 k-ft., (E-W component, refer to M_{X2})

M_{Z3} = 0.30 (43.1 k-ft) = 12.9 k-ft., (E-W component, refer to M_{X3})

KAISER ENGINEERS HANFORD

Calc. No. W320-24-014
Revision 0
Page No. 10 of 20

DESIGN ANALYSIS

Client WHC
WO/Job No. W-320/ER4319
Subject Process Building and Equipment Skid Foundation
Date 05/12/94 By M.R Custer MRC
Checked 02/10/95 By George J. Zyw
Location TANK 241-C-106
Revised By

Maximum soil pressure:

$q = \Sigma P/A$ (+/-) ΣM (c)/I_x (+/-) ΣM (c)/ I_z, where:

$I_x = bd^3/ 12 = 25.0\ (15.0)^3/ 12 = 7031\ ft^4$

$I_z = bd_3/ 12 = 15.0\ (25.0)^3/ 12 = 19531\ ft^4$

$q = (61.6 + 15.0 + 86.3)/ 15.0\ (25.0)$ (+/-) $(4.7 + 96.9 + 43.1)\ (7.5)/ 7031$ (+/-) $(1.4 + 29.1 + 12.9)\ (12.5)/ 19531$

$q = 0.434$ (+/-) 0.154 (+/-) 0.028

$q_{MAXIMUM} = 0.434 + 0.154 + 0.028 = 0.616$ ksf $< q_{ALLOW} = 1.5$ ksf .... ok

- Check slab two way shear: (Punching shear)

$q_u = 1.7\ (0.616\ ksf) = 1.05$ ksf

Assumed depth of slab, d = 12", then d effective = 12" - 3" = 9"

$b_o = 2(11.67 + d/2) + 2(21.0 + d/2) =$

$b_o = (23.34 + 0.75) + (42.0 + 0.75) =$

$b_o = 66.8$ ft

$V_u = [15.0\ ft\ (25.0\ ft) - 11.67\ ft\ (21.0\ ft)]\ 1.05\ ksf = 136.4$ k

$d = 136400$ lbs/ $[0.85\ (4)\ (4000)^{1/2}\ (\ 66.8 \times 12") = 0.79"$

d = 0.79" + 3" + 1" = 4.79" < 12" .... ok

- Check slab one way shear: (Beam shear)

$V_u = (15.0\ ft)\ (2.0\ ft)\ (1.05\ ksf) = 31.5$ k

$d = 31500$ lbs/ $(0.85)\ (2)\ (4000)^{1/2}\ (15\ ft \times 12") = 1.63"$

d = 1.63" + 3" + 1" = 5.63" < 12" .... ok

KAISER ENGINEERS HANFORD

Calc. No. W320-24-014
Revision 0
Page No. 11 of 20

DESIGN ANALYSIS

Client WHC
Subject Process Building and Equipment Skid Foundation

WO/Job No. W-320/ER4319
Date 05/12/94 By M.R Custer MRC

Checked 02/10/95 By George J. Lyn

Location TANK 241-C-106

Revised By

- Determine slab flexural reinforcement (Long dimension):

M_u = (15.0 ft) (1.05 ksf) (4.83 ft)^2/ 8 = 45.9 k-ft

M_u = 45.9 k-ft = 45900 lb-ft

M_u/ 0.90 b d^2 = 45900 (12")/ 0.90 (180") (8.5")^2 = 47, Use p(min) = 0.0018

A_s = 0.0018 (180") (8.5") = 2.75 in^2, 2.75 in^2/ 15 ft = 0.18 in^2/ 1 ft width

NOTE: # 4 @ 12 O.C (Area 0.20 in^2/ ft satisfies flexural for the slab, however # 6 @ 12" are required at the foundation wall, therefore:

Use #6 @ 12" O.C, (0.44 in^2/ 1 ft. width) .... ok

- Determine slab flexural reinforcement (Short dimension):

M_u = (25.0 ft) (1.05 ksf) (6.5 ft)^2/ 8 = 138.6 k-ft

M_u = 138.6 k-ft = 138600 lb-ft

M_u / 0.90 b d^2 = 138600 (12")/ 0.90 (300") (8.5")^2 = 85, Use p(min) = 0.0018

A_s = 0.0018 (300") (8.5") = 4.59 in^2, 4.59/ 25 ft = 0.18 in^2/ 1 ft width

4 @ 12" O.C, As = 0.20 in^2 satisfies slab flexural requirements,

#6 @ 12" O.C, (0.44 in^2/ 1 ft. width) are provided ..... ok

(Refer to foundation wall reinforcement requirements)

KAISER ENGINEERS HANFORD

Calc. No. W320-24-014
Revision 0
Page No. 12 of 20

DESIGN ANALYSIS

Client WHC
WO/Job No. W-320/ER4319
Subject Process Building and Equipment Skid Foundation
Date 05/12/94 By M.R Custer MRC
Checked 02/10/95 By George J. Lyn
Location TANK 241-C-106
Revised By

• Determine foundation wall reinforcement requirements:

The force resisting sliding is adequate for the applied forces, however reinforcement will be provided to tie the footing wall with the slab. The reinforcement will be provided, based on the greater requirements of either the horizontal moment due to the horizontal, seismic load or minimum reinforcement in the gross section, as required by ACI code:

$A_s(min) = (12") (30")(0.0012) = 0.43\ in^2$, or:

E_{n-s} = 23.4 k/ (15 ft)(3 ft) = 0.53 ksf (Seismic load from Bldg., equipment skid and foundation)

$M_u = 1.7\ (0.52\ k/sf)(1.5\ ft)^2/\ 2 = 1.0\ k\text{-}ft/\ ft$

M_u = 1.0 k-ft/ ft (12000 lb-in) = 12000 lb-in/ ft (Maximum along dimension)

$M_u/\ 0.90\ b\ d^2 = 12000/\ 12"\ (5)^2 = 40$, p(reqd) < p(min), Use As(min) = 0.43 in^2

A_s = 0.43 in^2/ ft. , Use # 6 @ 12" O.C , Provide reinforcement steel in wall parallel to the width and length dimension consisting of 2- #6 bars continuous in the top, middle and bottom of the wall with #3 tie bars @ 18" spacing.

NOTE: Slab reinforcement in the Long dimension shall be # 6 @ 12" with the slab bars extending into the footing a minimum of l_d.

• Determine development length requirements for reinforcement: (l_{db} min = 12")

$l_{db} = (0.04\ A_b\ f_y)\ /\ (f'c)^{1/2}$ (Reference 2, Section 2612(c), page 469)

l_{db} for #4 bar:

$l_{db} = 0.04\ (0.20)\ (60000)/\ (4000)^{1/2} = 7.6"$
or
$l_{db} = 0.03\ db\ fy/\ (f'c)^{1/2} = 0.03\ (0.5)(60000)/\ (4000)^{1/2} = 14.2"$

Use l_{db} = 15"

l_{db} for #6 bar:

$l_{db} = 0.04\ (0.44)(60000)/\ (4000)^{1/2} = 16.7"$
or
$l_{db} = 0.03\ (0.75)(60000)/\ (4000)^{1/2} = 21.4"$

Use l_{db} = 22"

KAISER ENGINEERS HANFORD

Calc. No. W320-24-014
Revision 0
Page No. 13 of 20

DESIGN ANALYSIS

Client WHC
WO/Job No. W-320/ER4319

Subject Process Building and Equipment Skid Foundation
Date 05/12/94 By M.R Custer MRC

Checked 02/10/95 By George J. Lyn

Location TANK 241-C-106
Revised By

• Determine building enclosure, anchorage requirements:

Requirements: (Reference 2, Table No.26E, page 547)

- Anchor bolt material, ASTM A 307
- Minimum edge distance, 6" (w/o reduction)
- Size 3/4 DIA.:
  - Allowable shear load, 3560 lbs (w/o special inspection)
  - Allowable tension load, 2250 lbs (w/o special inspection)

- Minimum spacing (w/o reduction), 12 x Dia. = 12 (.75) = 9"
- Minimum embedment, 5" + 2" = 7"
- Anchor bolt allowables (per bolt w/ special inspection):

V_A = 3560 lbs
T_A = 2250 lbs x 2 = 4500 lbs

- Reduced anchor bolt allowable loads for 3" center to center spacing:

V_A (reduced) = 3"/ 9" (3560 lbs) = 1187 lbs

T_A (reduced) = 3"/ 9" (4500 lbs) = 1500 lbs

Design loads (per anchor bolt): (Wind load combination governs)

Vertical (direct tension), T_1 = 4.0 k/ 4(2) = 0.50 k

Vertical (tension, W_h component), T_2 = 3.8 k (5.0 ft)/ 15.0 ft (2)(2) = 0.32 k

Horizontal (shear), (E-W) V = 3.8 k/ 4(2) = 0.48 k

Check interaction equation:

$(V/VA)^{5/3} + (T/TA)^{5/3} < 1.0$

$(0.48/ 1.19)^{5/3} + [(0.50 + 0.32)/ 1.5]^{5/3} =$

0.22 + 0.37 = 0.59 < 1.0 .... ok, Provide a minimum embedment of 12"

KAISER ENGINEERS HANFORD

Calc. No. W320-24-014
Revision 0
Page No. 14 of 20

DESIGN ANALYSIS

Client WHC
WO/Job No. W-320/ER4319
Subject Process Building and Equipment Skid Foundation
Date 05/12/94 By M.R Custer MRC
Checked 02/10/95 By George J. Ryan
Location TANK 241-C-106
Revised By

- Determine anchorage for equipment skid:

  The detailed design of the anchor bolts for the equipment skid is provided in Reference 6, as part of calculation W320-24-019, Rev. 0.
  The 1/2" baseplate is provided at each anchor bolt location to assure a level bearing surface for the equipment skid; 4 - 1/2" diameter x 6" long welded studs are nominally provided @ each plate, 1 @ each corner, 2" from the edge of the plate, each way. (Horizontal load @ each plate is 30.0 k/ 12 = 2.5 k)

- Check surcharge pressure effects on an adjacent, reinforced, concrete pipe trench (vault), (Reference drawings H-2-41283 and H-2-41285):

  The effects of the surcharge on the concrete trench can be evaluated through a summation of the horizontal force components acting on the trench. If the resisting forces are greater than or equal to the forces due to the soil and surcharge pressures, the trench will not be affected by the surcharge.

  Applied force due to soil and surcharge:

  $P_A = 1/2\ \partial K_a H^2$,

  Soil type, Sandy
  $K_a = 0/27$
  $\partial = 110$ lb/cf

Forces acting, $F_A = F_{SOIL\ @\ B} + F_{SURCHARGE}$

$F_{SB} = 1/2\ (0.27)(0.110\ ksf)(5.4\ ft)^2 = 0.43\ k/ft$

$F_S = 0.62\ k/ft$ (Refer to $q_{maximum}$ for the foundation design, conservative factored loads used)

$F_A = (0.43 + 0.62) = 1.05\ k/ft$

Forces resisting, $F_R = fN = f(Wt_C\ (concrete) + Wt_S\ (soil))$,

$f = \tan \phi = \tan 33°$, f= 0.65

$Wt_C = 2\ (8"/12)\ (3.33\ ft + 1.0\ ft)(150\ pcf) = 866\ lb/ft = 0.87\ k/ft$

$Wt_{SA} = (110\ pcf)(3.1\ ft)(3.33\ ft) = 1136\ lb/ft = 1.1\ k/ft$

$F_R = 0.65\ (0.87 + 1.1) = 1.3\ k/ft$

$\Sigma F = 0$, $F_R = 1.3\ k/ft > F_A = 1.05\ k/ft$ ....ok (conservative)

KAISER ENGINEERS HANFORD

Calc. No. W320-24-014
Revision 0
Page No. 15 of 20

DESIGN ANALYSIS

Client WHC
WO/Job No. W-320/ER4319
Subject Process Building and Equipment Skid Foundation
Date 05/12/94 By M.R Custer MRC
Checked 02/10/95 By George J. Zyp
Location TANK 241-C-106
Revised By

• Check foundation adequacy due to live loads from rotating equipment:

The live load input to be evaluated in the foundation design is generated by the recirculation fan (equipment no. FN-1361). The input load is considered negligible, due to the extremely, small input load and equipment mass involved. A simplified approach may be employed to determine the adequacy of the foundation (Reference 4, page 601). This approach provides a comparison between the mass of the equipment and the mass of the foundation (mass ratio) to assess the potential effects of the rotating equipment on the foundation. The basic requirement is that the weight of the foundation be approximately 3 to 5 times the weight of the rotating equipment. In this case the ratio is: 86300 lbs to 350 lbs or 247 times the weight of the equipment (conservative). Therefore, the foundation provided is considered structurally adequate.

KAISER ENGINEERS
HANFORD

DESIGN ANALYSIS

Calc. No. W320-24-01
Revision 0
Page No. 16 of 20

Client WHC
Subject PROCESS BLDG AND EQUIPMENT SKID FOUNDATION
Location TANK 241-C-106

WO/Job No.
Date 11/11/94 By M.R CUSTER MLC
Checked 12/10/94 By George J. Zyw
Revised By

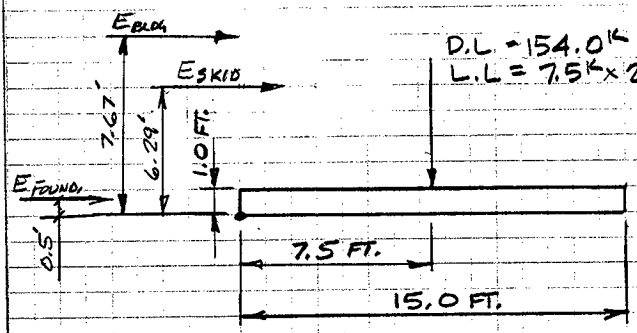

D.L = 154.0 K
L.L = 7.5 K x 2 = 15.0 K

$E_{BLDG} = 0.44^K$
$E_{SKID} = 23.1^K$
$E_{FOUND} = 7.6^K$

FOUNDATION LOADS AND GEOMETRY

FIGURE 1

Client WHC
Subject PROCESS BLDG AND EQUIPMENT SKID FOUNDATION
Location TANK 241-C-106

WO/Job No.
Date 11/11/94 By M.R CUSTER MRC
Checked 11/10/94 By George J. Zyw
Revised By

FOUNDATION AND ADJACENT PIPE TRENCH CONFIGURATION

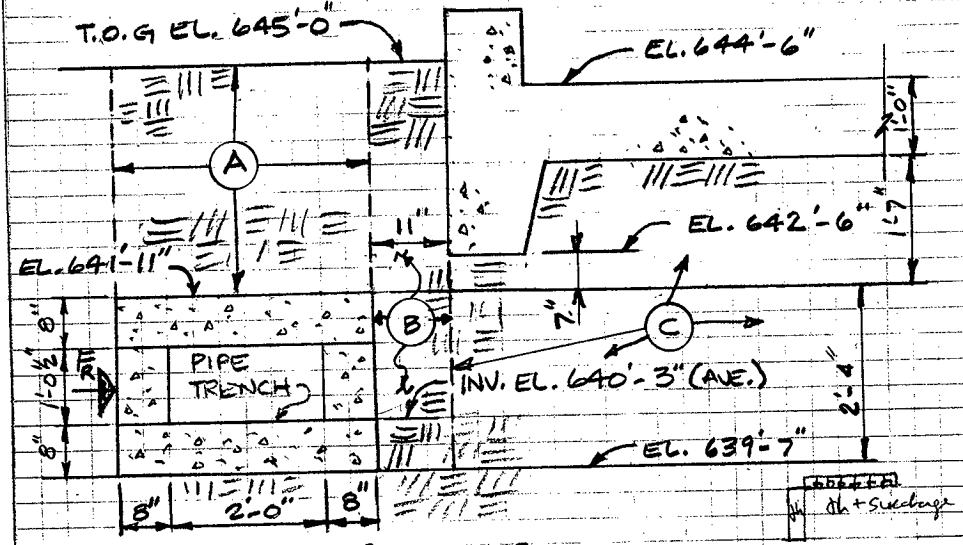

FIGURE 2

HEIGHT OF (A), $645.0 - 641.92 = 3.08'$

WIDTH OF (A), $2.0' + 2(.67') = 3.33'$

HEIGHT OF (B), $645.0 - 639.58 = 5.42'$

WIDTH OF (B), $= 0.92'$

DETERMINE FORCES ON TRENCH AND RESISTING FORCES:

$$F_{RESISTING} = fN = f(WT._{CONC.} + WT._{SOIL}) \geq F_{SB} + F_{SC} + F_{SURCHARGE}$$

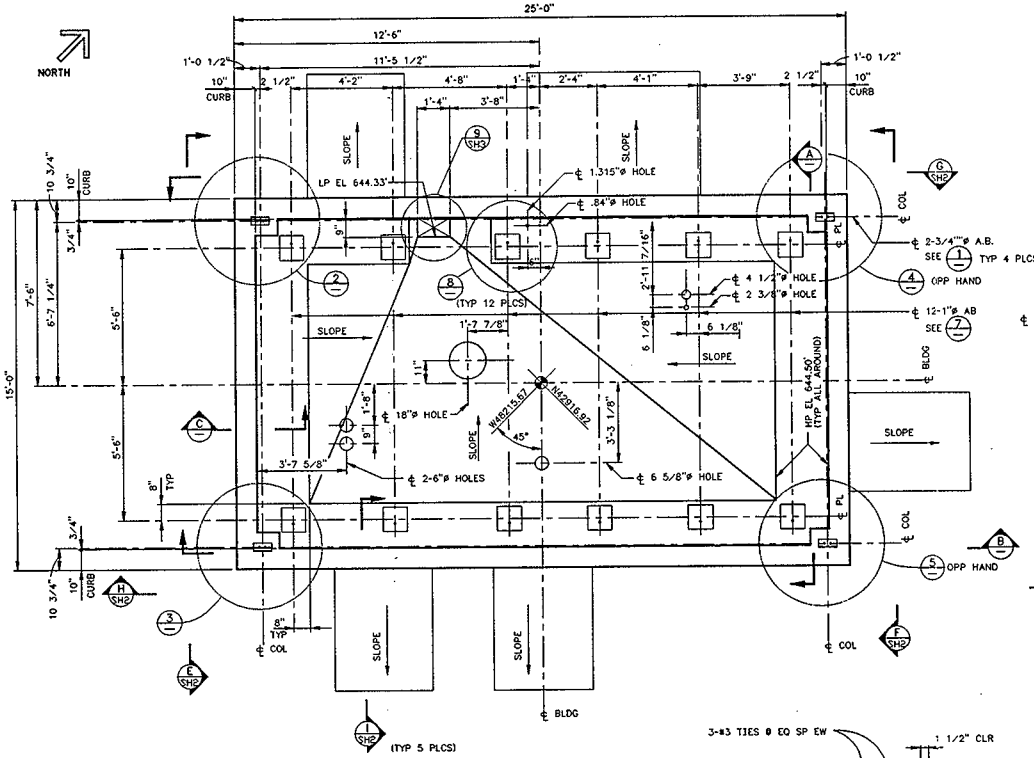

PLAN
SCALE: 1/2"=1'-0"

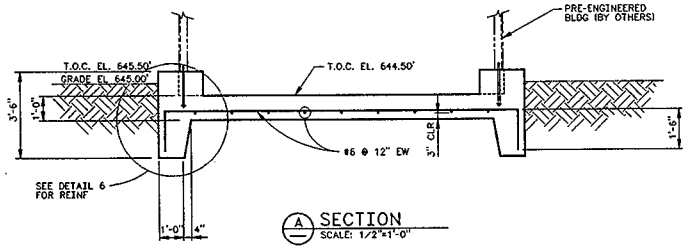

A SECTION
SCALE: 1/2"=1'-0"

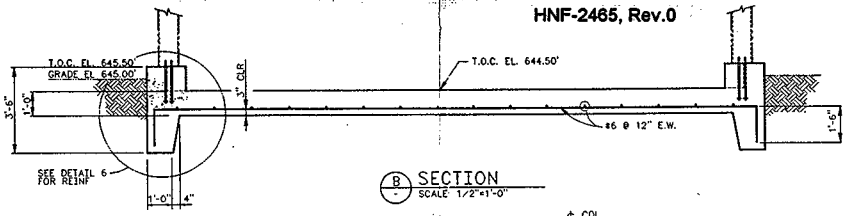

B SECTION
SCALE: 1/2"=1'-0"

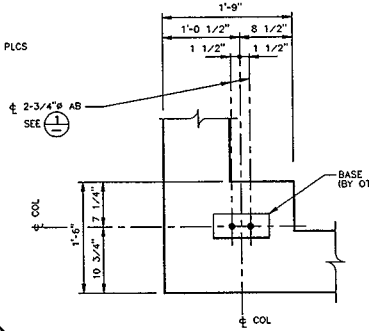

3 DETAIL-AS SHOWN
5 DETAIL-OPP. HAND
SCALE: 1 1/2"=1'-0"

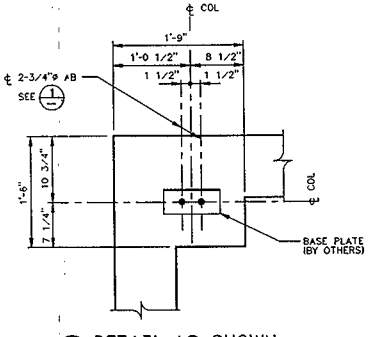

2 DETAIL-AS SHOWN
4 DETAIL-OPP. HAND
SCALE: 1 1/2"=1'-0"

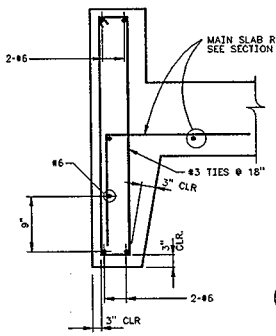

C SECTION
SCALE: 1 1/2"=1'-0"

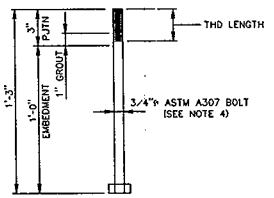

1 DETAIL-ANCHOR BOLT
SCALE: 3"=1'-0"
(8 REQ'D.)

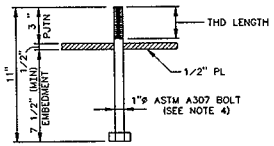

7 DETAIL-ANCHOR BOLT
SCALE: 3"=1'-0"
(12 REQ'D.)

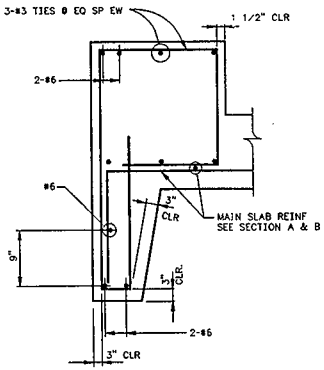

6 DETAIL
SCALE: 1 1/2"=1'-0"

NOTES:
1. SEE DWG. H-2-818480 FOR HVAC DETAILS.
2. SEE DWG. H-2-818481 & 482 FOR PIPING DETAILS.
3. MATERIALS:
   CONCRETE: 4000PSI @ 28 DAYS
   REINFORCING STEEL: ASTM A615, GRADE 60
4. VERIFY SIZE & LOCATION OF ANCHOR BOLTS WITH VENDOR DRAWING PRIOR TO INSTALLATION.

W320-24-014
REVISION 0
PAGE 18 OF 20

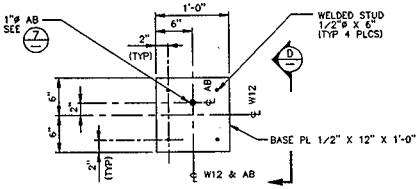

8 DETAIL-BEARING PLATE W/AB
SCALE: 1 1/2"=1'-0"
(8 REQ'D)

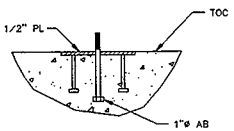

D SECTION
SCALE: 1 1/2"=1'-0"
(TYP @ 12 PLACES)

H2818482	PIPING-PLAN, SECT & DET
H2818481	PIPING-PLAN, SECT & DET
H2818480	HVAC-GENERAL ARRANGEMENT
H2818469	HVAC-PIPING C-FARM TK C-106
H2818455	PROCESS BLDG SKID

DESIGNED	PC BRINKMAN
CHECKED	
SAFETY	SEE DR/AT FORM
QA/QE	SEE DR/AT FORM
CIVIL DISC	SEE DR/AT FORM
LEAD DISC	
SAFETY CLASS	3
USE	PRELIMINARY

U.S. DEPARTMENT OF ENERGY
RICHLAND OPERATIONS OFFICE
ICF KAISER HANFORD COMPANY

STRUCTURAL
PROCESS BUILDING
PLAN, SECTIONS & DETAILS

W320 TANK 241-C-106 SLUICING

SIZE	F	DRAWING NO.	H-2-818451
REV. NO.	0	SCALE	SHOWN
JOB NO.	ER4319	SHEET	1 OF 3

REVISION NO. 19 — 09/26/96
APPROVED FOR IMPLEMENTATION
CAD FILE B818451A — CAD CODE 2B:1BM:ACD2:12.0:NN
WHC
PLOT SCALE: 1=24 — KEHCAD

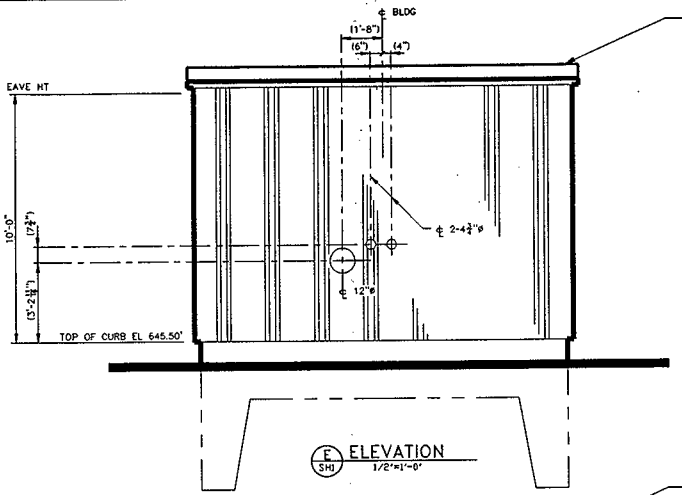

E SHI ELEVATION 1/2"=1'-0"

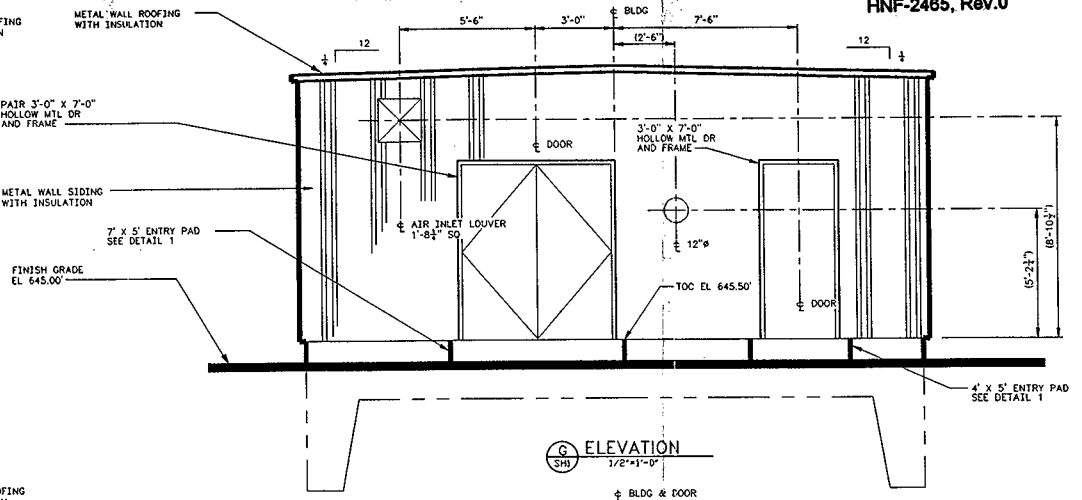

G SHI ELEVATION 1/2"=1'-0"

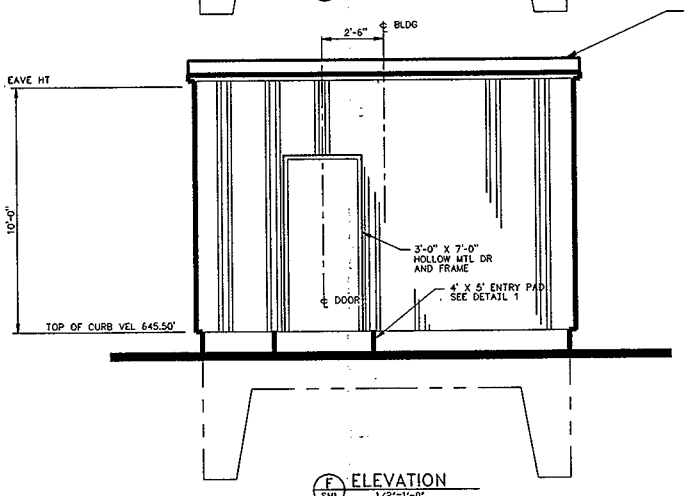

F SHI ELEVATION 1/2"=1'-0"

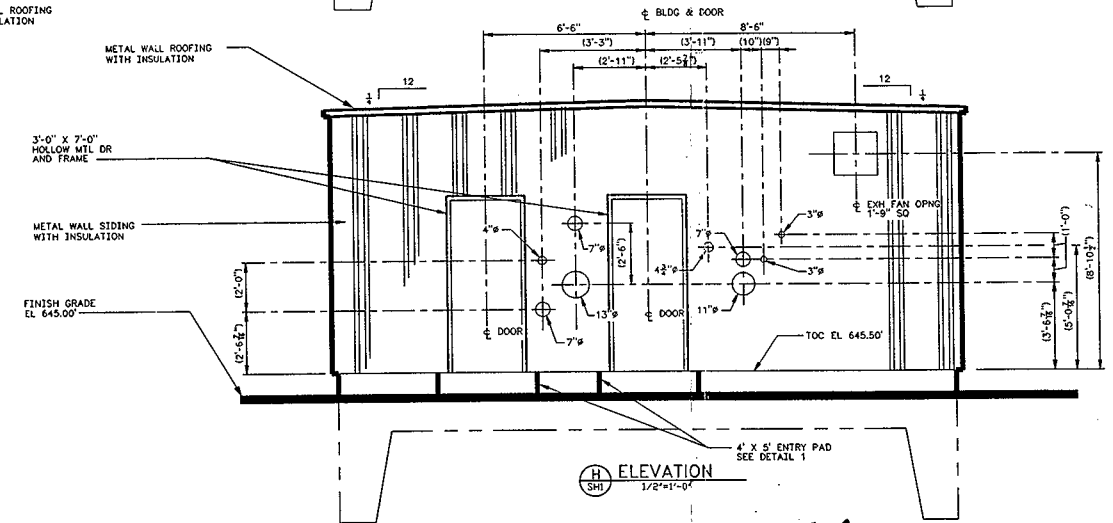

H SHI ELEVATION 1/2"=1'-0"

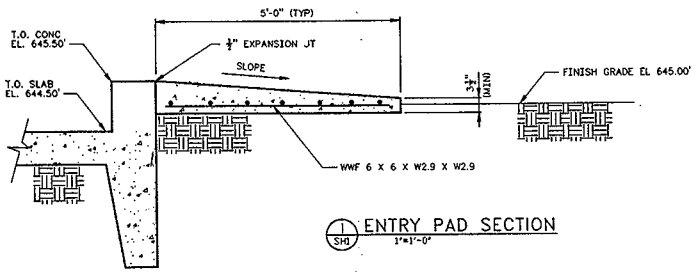

1 SHI ENTRY PAD SECTION 1"=1'-0"

W320-24-014
REVISION 0
PAGE 19 OF 20

NOTES:

1. INSTALL CONCRETE ENTRY PAD AT LOCATION INDICATED 3½" THK MIN. FLUSH WITH TOP OF SLAB. ENTRY PAD NOT TO SLOPE MORE THAN 1 VERT. TO 12 HORZ.
2. LOCATE AS REQUIRED, BLDG. I.D. NUMBER "241-C-91, AIR & WATER SERVICE BLDG."
3. PENETRATION LOCATION DIMENSIONS ARE APPROXIMATE. FIELD TO VERIFY THE LOCATIONS OF THE PENETRATING ITEMS PRIOR TO PROVIDING OPENINGS.
4. PENETRATION SLEEVES (BY OTHERS, SEE DWG H-2-818484) TO BE SUPPORTED FROM BLDG GIRTS/STUDS WITH FIELD WELDED ANGLES.
5. THE BUILDING VENDOR SHALL PROVIDE ADDITIONAL FRAMING MEMBERS AT EACH PENETRATION LOCATION. THESE MEMBERS AND ASSOCIATE CONNECTION HARDWARE SHALL BE SHIPPED LOOSE WITH THE STRUCTURE TO BE INSTALLED LATER.

STATE OF WASHINGTON — 21186 — REGISTERED PROFESSIONAL ENGINEER — EXPIRES 03-03-96

DESIGNED PC BRINKMAN 3/31	SAFETY CLASS 3		PRELIMINARY
CHKD DSGN			
CHECKED		U.S. DEPARTMENT OF ENERGY	
QA/TY SEE DR/AT FORM		RICHLAND OPERATIONS OFFICE	
DRAFT SEE DR/AT FORM		ICF KAISER HANFORD COMPANY	
DSN CHK SEE DR/AT FORM		STRUCTURAL	
LEAD DSGR		PROCESS BUILDING	
APVD FOR IMPLEMENTATION REVISION NO. 11		ELEVATIONS	
APPROVED FOR IMPLEMENTATION BY WHC DATE	PROJECT W-320, TANK 241-C-106 SLUICING		
	BLDG 241-C-91	SHEET NO 0901	DWG NO H-2-818451 REV NO 0
	DRAWN SHOWN	JOB NO ER4319	SHEET 2 OF 3

NUMBER	TITLE	NUMBER	TITLE	NO	REVISION	REV BY & DATE	RCN APPROVALS
DRAWING TRACEABILITY LIST		NEXT USED ON	REFERENCES				

CAD FILE B818451B CAD SYSTEM 2D/IBM:ACD2:12.0-NN SHEETS IN 3 PLOT SCALE: 1=12 KEHCAD

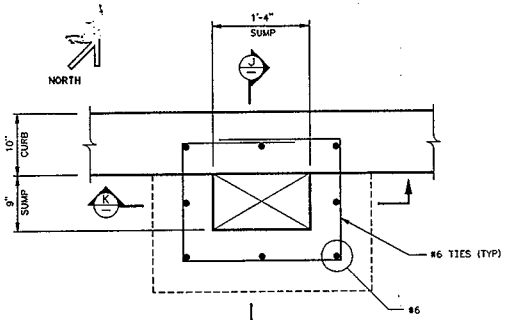

9 DETAIL
SH1 SCALE: 1 1/2"=1'-0"

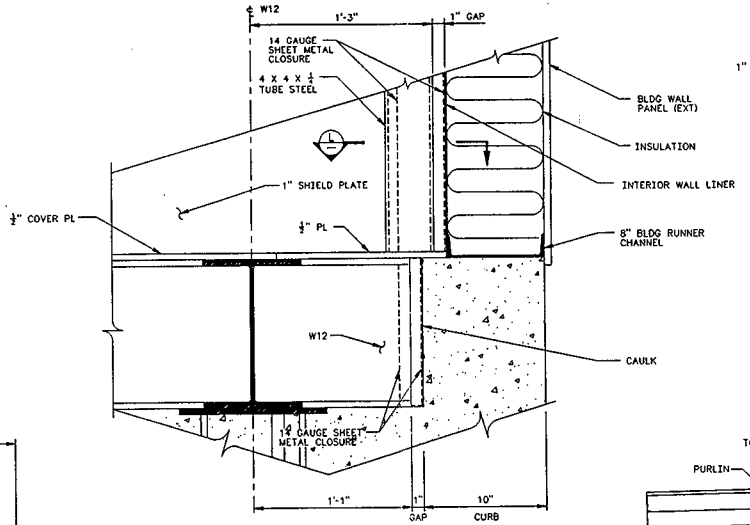

H SECTION
H-2-818455, SH3 SCALE: 3"=1'-0"

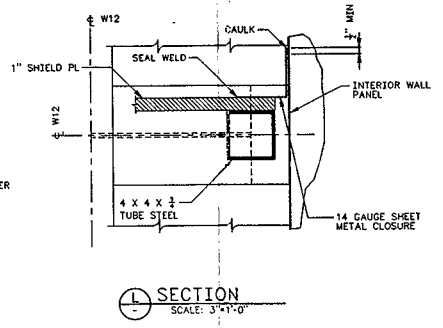

L SECTION
SCALE: 3"=1'-0"

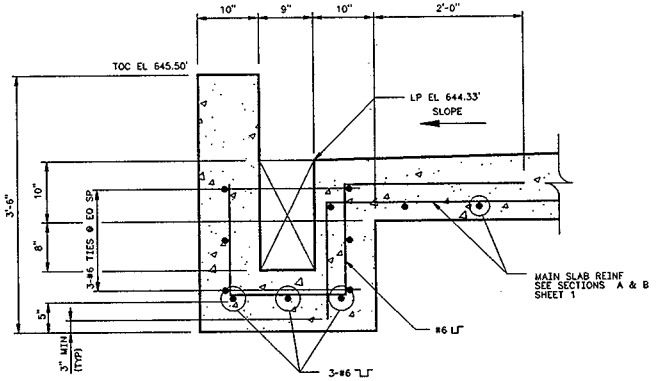

J SECTION
SCALE: 1 1/2"=1'-0"

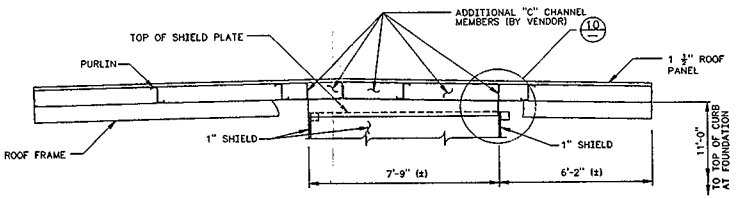

C PARTIAL SECTION
H-2-818455, SH3 SCALE: 3"=1'-0"

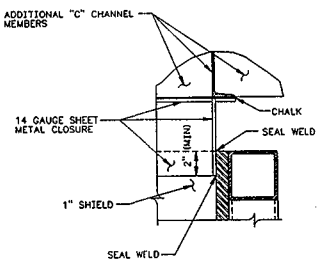

10 TYP CLOSURE DETAIL
SCALE: 3"=1'-0"

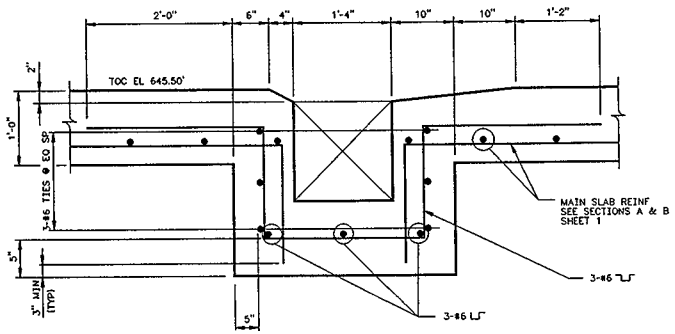

K SECTION
SCALE: 1 1/2"=1'-0"

NOTES:

1. PROVIDE FULL HEIGHT CONNECTION ANGLES AT ALL "C" CHANNEL INTERSECTION AND CAULK ALL GAPS AND JOINTS.

W320-24-014
REVISION 0
PAGE 20 OF 20

EXPIRES 03-03-96

PRELIMINARY

DESIGNED PC BRINKMAN
SAFETY CLASS 3
SAFETY SEE DR/AT FORM
ENVIR SEE DR/AT FORM
QUAL DOC SEE DR/AT FORM
CHECKED
DRAWN
LEAD DISCIP

U.S. DEPARTMENT OF ENERGY
RICHLAND OPERATIONS OFFICE
ICF KAISER HANFORD COMPANY

STRUCTURAL
PROCESS BUILDING
SECTIONS & DETAILS

W320 TANK 241-C-106 SLUICING

DSN	BLDG NO.	TRAN NO.	REV NO.
F	241-C-93	0901	H-2-818451 | 0

SCALE SHOWN JOB NO. ER4319 SHEET 3 OF 3

REV NO.	DESCRIPTION	REV DATE	ECN APPROVALS	ECN FOR CONSTR DATE

APPROVED FOR IMPLEMENTATION
BY
FOR WHC DATE

CAD FILE B818451C CAD CODE 28:18M:ACD2:12.0:NN SPEC N

2 PLOT SCALE: 1=24 KEHCAD 1

DISTRIBUTION SHEET

To	From	Page 1 of 1
Distribution	JW Bailey	Date 19 July 1998
Project Title/Work Order		EDT No. 622223
Project W-320 Tank 106-C, HNF-2465, Civil/Structural Calculations, Vol. 5		ECN No. n/a

Name	MSIN	Text With All Attach.	Text Only	Attach./ Appendix Only	EDT/ECN Only
JW Bailey	S2-48				
W-320 Project Files	R1-29				