HLW-STE-2002-00305

Advanced Design Mixer Pump Tank 18 Design Modifications Summary Report

B. J. Adkins
Westinghouse Savannah River Company
Aiken, SC 29808

Executive Summary

The Westinghouse Savannah River Company (WSRC) is preparing to retrieve high level waste (HLW) from Tank 18 in early FY03 to provide feed for the Defense Waste Processing Facility (DWPF) and to support tank closure in FY04. As part of the Tank 18 project, WSRC will install a single Advanced Design Mixer Pump (ADMP) in the center riser of Tank 18 to mobilize, suspend, and mix radioactive sludge in preparation for transfer to Tank 7. The use of a single ADMP is a change to the current baseline of four (4) standard slurry pumps used during previous waste retrieval campaigns. The ADMP was originally conceived by Hanford and supported by SRS to provide a more reliable and maintainable mixer pump for use throughout the DOE complex. The ADMP underwent an extensive test program at SRS between 1998 and 2002 to assess reliability and hydraulic performance. The ADMP ran for approximately 4,200 hours over the four-year period. A detailed tear down and inspection of the pump following the 4,200-hour run revealed that the gas mechanical seals and anti-friction bearings would need to be refurbished/replaced prior to deployment in Tank 18. Design modifications were also needed to meet current Authorization Basis safety requirements. This report documents the modifications made to the ADMP in support of Tank 18 deployment.

This report meets the requirements of Tanks Focus Area (TFA) Milestone 3591.4-1, "Issue Report on Modifications Made to the ADMP", contained in Technical Task Plan (TTP) SR16WT51, "WSRC Retrieval and Closure".

Keywords: Tank 18, ADMP, TFA, Advanced, Mixer, Pump

ADMP Description

The ADMP is a long-shaft, vertical, centrifugal mixer pump with two tangential nozzles used to mobilize, mix, and suspend sludge waste in preparation for removal. It has a gas-filled column with oil-lubricated bearings. The pump is 55 feet long, has a 16 inch column, 39 inch casing, 18 inch mixed flow impeller, two 6 inch diameter nozzles, and a 300 hp motor. The pump is made up of 9 column sections, each approximately 6 feet long. Intermediate column sections are removable with each section consisting of a shaft, thrust bearing, radial bearing and flexible coupling. The upper column has the same bearing arrangement as intermediate sections plus a gas mechanical seal. The lowest column section also has a gas mechanical seal plus a larger shaft and bearings. The minimum pump speed is 650 rpm in order to assure adequate lubrication to the bearings. Total weight, including turntable and motor, is 21,000 lbs. Performance is 10,400 gpm at 1185 rpm, 52 feet of head. The theoretical cleaning radius is over 50 feet. Figure 1 shows a full-length photo of the ADMP at TNX.

Summary of Modifications

Redesigned ADMP Suction Screen

The ADMP suction screen was redesigned to reduce the maximum opening size from 1" to 0.31" in order to prevent steel tapes from entering the wet end of the pump. The original wire mesh screen (Figure 8) was replaced with a steel plate containing 0.31" diameter holes (Figure 9). The smaller size openings decreased the available suction area, therefore to mitigate the potential for cavitation/starvation, LPI increased the available screen area by opening the top portion of the suction strainer and increasing the overall diameter from 32" to 39". There was an issue raised that opening the top portion of the suction screen would increase vortexing, however, this concern was deemed small since the pump's discharge nozzles are located above its suction and the pump will rotate during operation. TNX testing confirmed that vortexing was not increased as a result of this modification.

Installed Orifice in ADMP Seal Gas System

A flow-restricting orifice was installed in the ADMP gas supply system to alleviate an AB safety concern associated with the potential to aerosolize waste during operation in low tank levels or during certain failure modes such as a column rupture below the tank liquid level. The need for this orifice is documented in S-CLC-G-00289, "ADMP Air Column Leak Aerosolization Consequences." This calculation shows that the orifice needs to have a diameter of 0.4 inches or less to protect the off-site public and on-site worker from a potential aerosolization event. This calculation was subsequently revised using a less-conservative, Type IV tank specific source term. The revised analysis showed that the accident no longer posed a threat to the off-site public; therefore, the orifice was downgraded from Safety Class (SC) to Safety Significant (SS) to protect the on-site worker.

Refurbished Gas Mechanical Seals

The gas mechanical seals in the ADMP column are used to ensure a clean and moisture free environment for the anti-friction bearings used to support the pump shaft. Following completion of the 4,200-hour run, the seals were shipped to the manufacturer for inspection and refurbishment. The manufacturer reported carbon deposits and chipping in the faces on both mechanical seals and recommended that the bellows and seal faces be replaced. The vendor replaced the components and conducted a leak check to verify proper re-assembly. The seals arrived at SRS in May 2002.

Replaced ADMP Anti-Friction Bearings

All of the anti-friction bearings were inspected and replaced in the pump during re-assembly. Oil samples were taken from every bearing housing and screened for contamination and wear particles during disassembly. The results identified two bearings in the upper column section with water contamination. Of these two bearings, one had wear particles. Both bearings were sent to a Materials Lab for examination. The examination confirmed that the uppermost bearing had signs of wear caused by the contamination. A review of the digital images taken during disassembly revealed that the water contamination path was the mounting gasket for the upper mechanical seal. The bearing arrangement in the lowest column section was also redesigned (by the pump manufacturer) to increase the thrust carrying capability due to a failure after approximately 3800 hours of run time. This is the largest bearing in the pump and supports the thrust developed by the impeller. Bearing post-mortim proved very difficult because the cage was destroyed so the exact cause of the failure was indeterminate.

Refurbished Impeller

The impeller was sent to the pump manufacturer for inspection, refurbishment, and balancing. Damage to the impeller (dings and dents) was noticed during disassembly following the 4,200 hour run. The damage was most likely caused by debris (rocks) in the TNX test tank from previous testing with simulants. Refer to Figures 2 and 3 for the before and after pictures,

respectively. During receipt inspection, it was noted that a significant amount of material was removed from the impeller during balancing. It was not known whether this condition would lead to a significant level of hydraulic imbalance, however, TNX testing confirmed that hydraulic imbalance was not a problem.

Relocated ADMP Column Relief Device

The relief valve was relocated to the upper pump to make it more accessible for maintenance (Figures 5 and 6). The existing column blow down line (Figure 4) was cut and capped. This modification deleted the ability to blow out the pump if waste leaks into the column. This feature was not needed since the pump will be abandoned in-place.

ADMP Mining Ring Modifications

The ADMP was equipped with a line running from the top of the pump to its bottom for the purpose of supplying flush water to a mining ring and the pump casing. The objective of the mining ring was to clear debris beneath the pump during installation. This same line also supplied water to flush the casing. A Failure Mode & Effects Analysis identified the potential to pump waste up the supply line during pump operation. The casing lines were cut and capped to address this safety concern. The supply line was equipped with dual check valves and a Hansen connector that could not be credited since they were not procured as safety related items. The manufacturer also fabricated a bracket to attach the mining ring to the new screen (Figure 7).

Addition of Low Liquid Level Conductivity Probes

Low liquid level conductivity probes (LLLCP) were added to the ADMP design to address aerosolization concerns at low operating liquid levels in the tank. The ADMP jets have the potential to produce significant quantities of aerosols that could result in a safety concern for on-site and off-site personnel. The safety analysis calculations are documented in S-CLC-G-00289, "ADMP Air Column Leak Aerosolization Consequences". The calculations originally showed that this accident had the potential to exceed evaluation guidelines for the on-site worker. The LLLCPs were identified, procured, and fabricated as Safety Significant (SS). The calculations above were revised to reflect a more accurate source term (Tank 18 specific radionuclide inventories). Consequently, the LLLCPs were downgraded from SS to Production Support (PS). The LLLCPs will remain in the design as a good engineering practice. The probes are housed in 1-inch stainless steel pipes that run the length of the ADMP column. The LLLCPs are oriented away from the discharge nozzles to protect against spurious alarms. It is estimated that the probes will be set at 43 inches above tank bottom to prevent the jets from "rooster tailing" (becoming exposed in air). This setpoint was confirmed during TNX testing.

Figure 1. ADMP Photo

Figure 2. ADMP Impeller Before Refurbishment

Figure 3. ADMP Impeller After Refurbishment

Figure 4. ADMP Column Relief Device Modifications

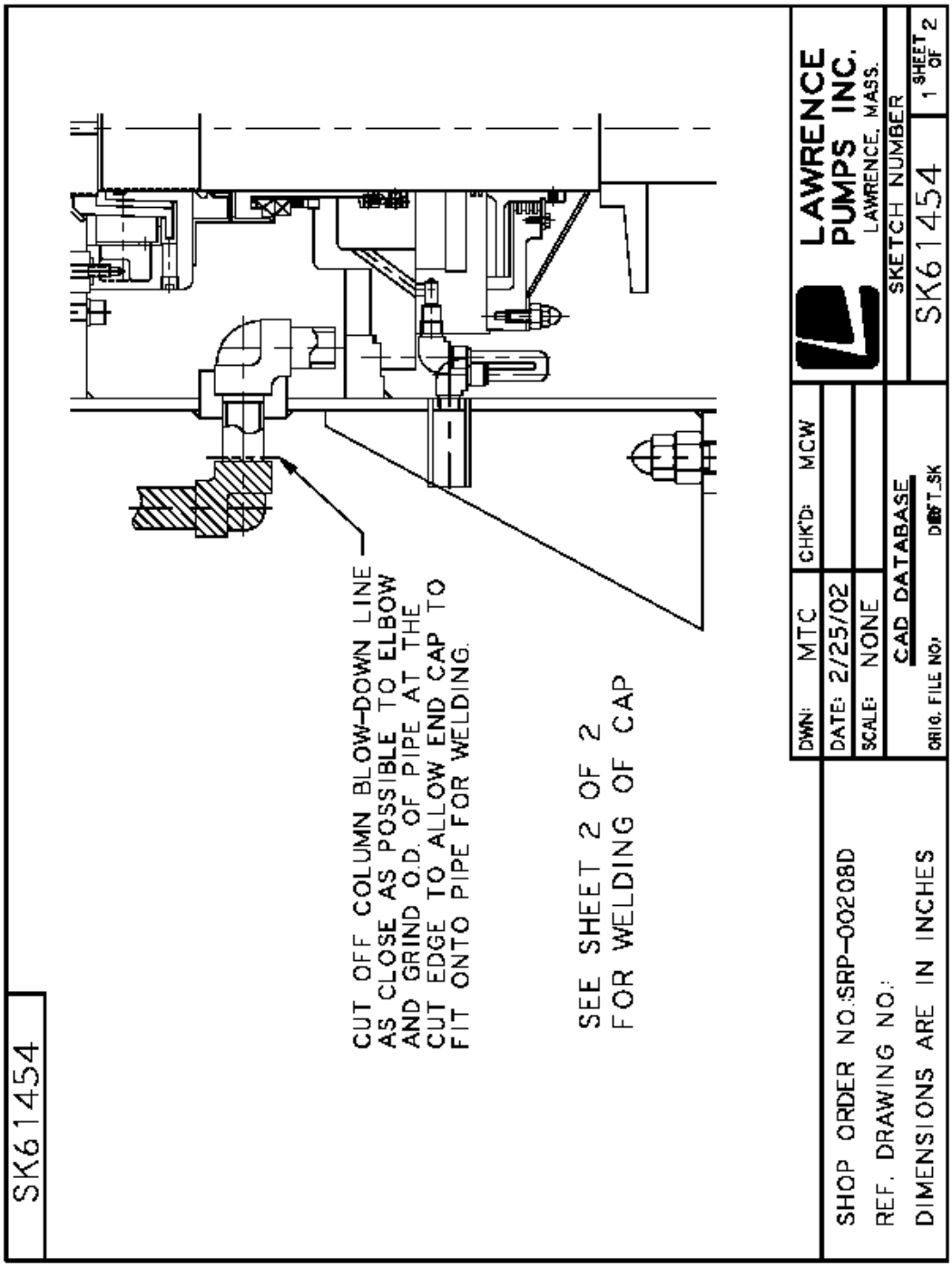

Figure 5. ADMP Column Relief Valve Modifications

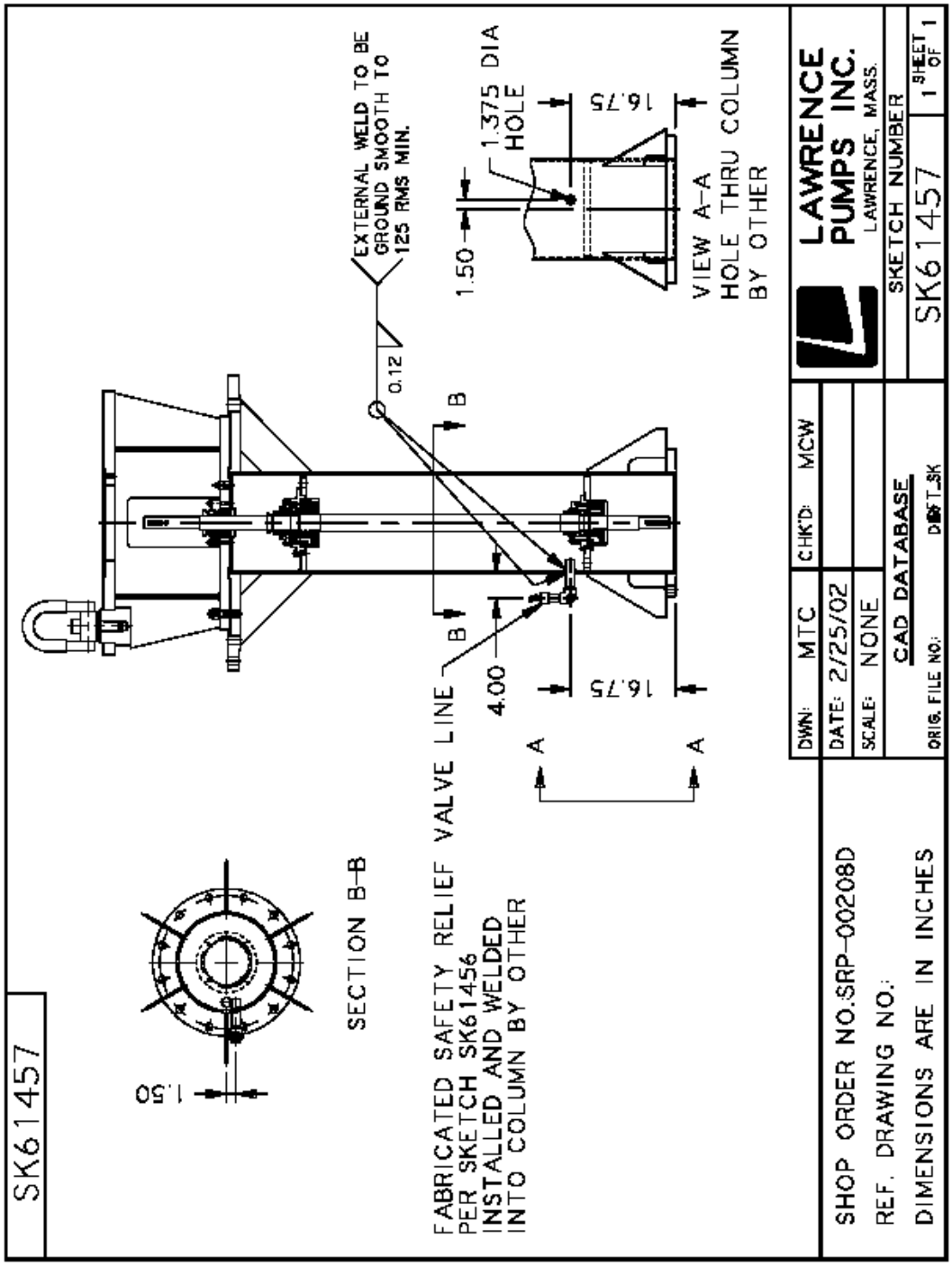

Figure 6. ADMP Safety Relief Valve

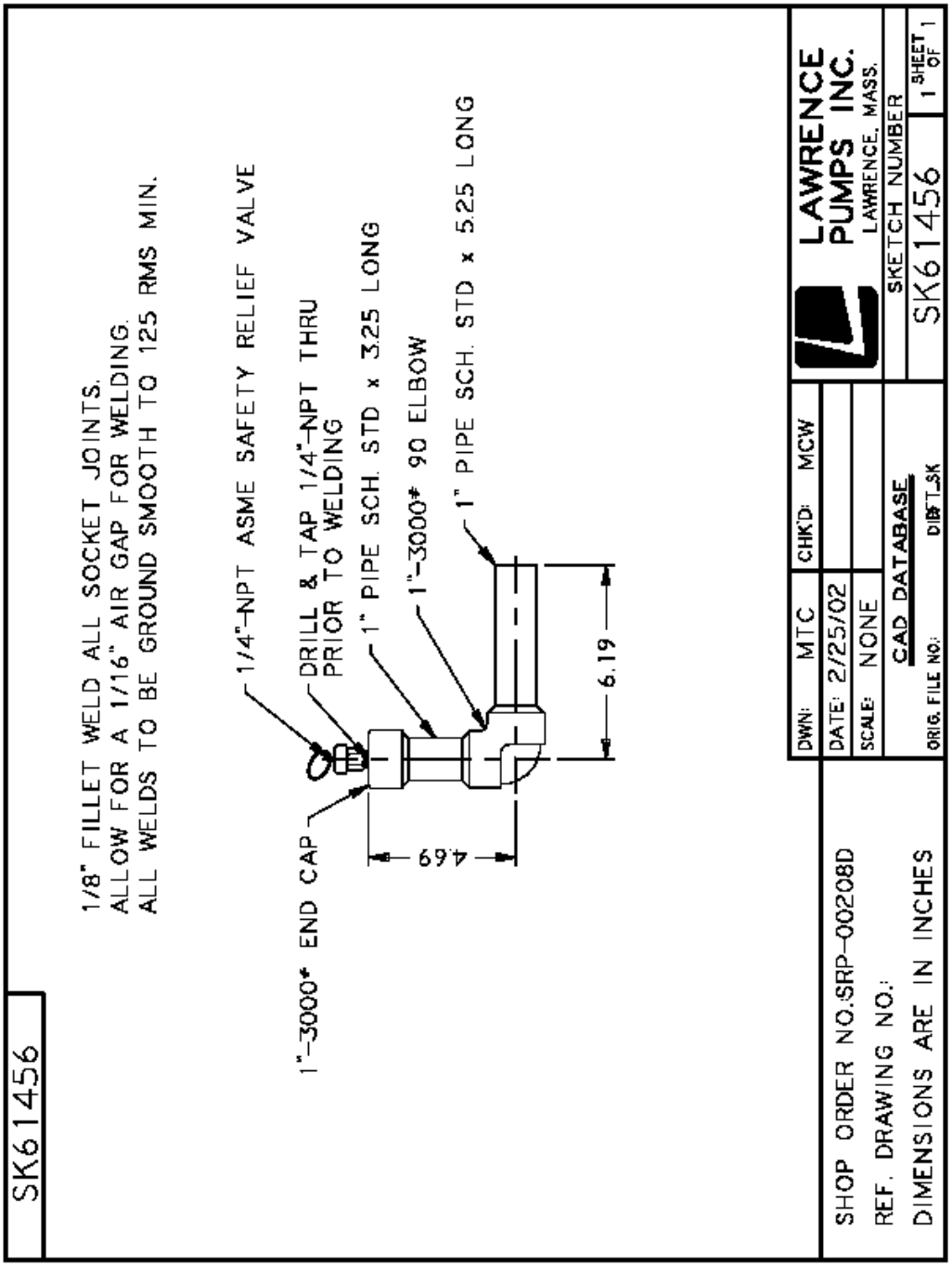

Figure 7. Mining Ring Modifications

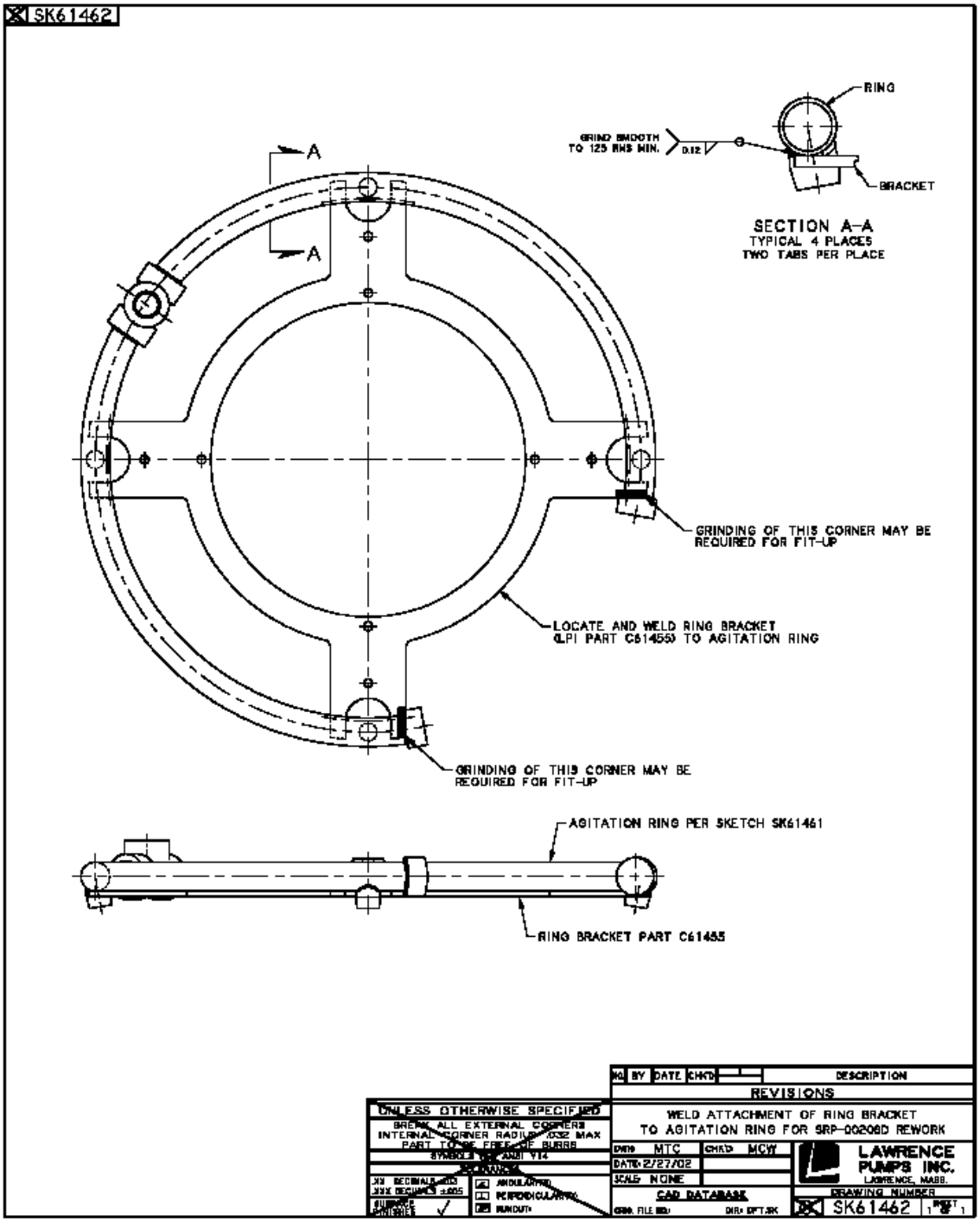

Figure 8. ADMP Suction Screen Modifications (Before)

Figure 9. ADMP Suction Screen Modifications (After)